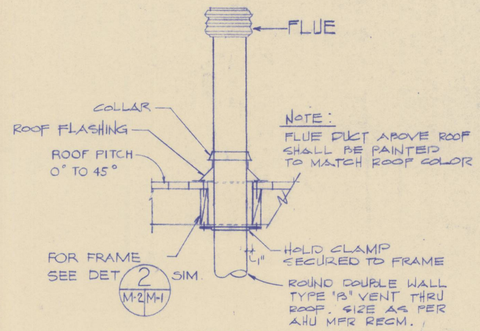

FLUE THRU ROOF DETAIL (1 / M-2 M-1)

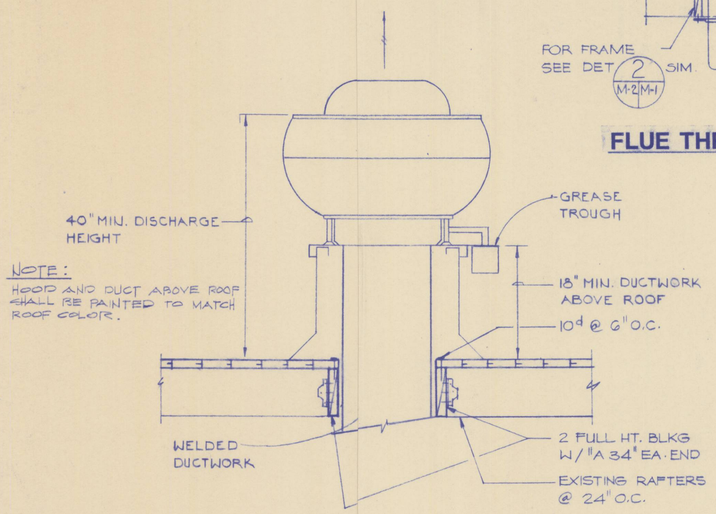

HOOD EXHAUSTFAN DETAIL (2 / M-2 M-1)
NTS

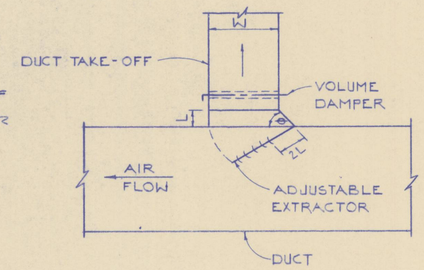

NOTES:
θ = 45° ENTRY
L = 1/4" W (4" MINIMUM)

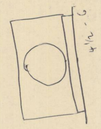

BRANCH TAKE - OFF DETAIL (4 / M-2 M-1)
NTS

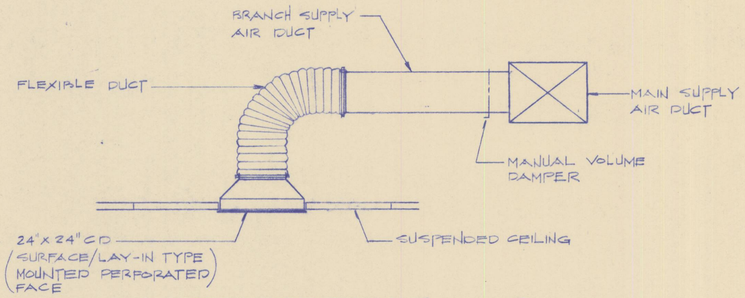

SUPPLY DIFFUSER DETAIL (5 / M-2 M-1)
NTS

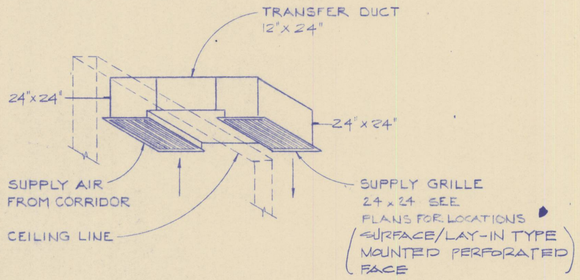

TRANSFER DUCT DETAIL (6 / M-2 M-1)
NTS

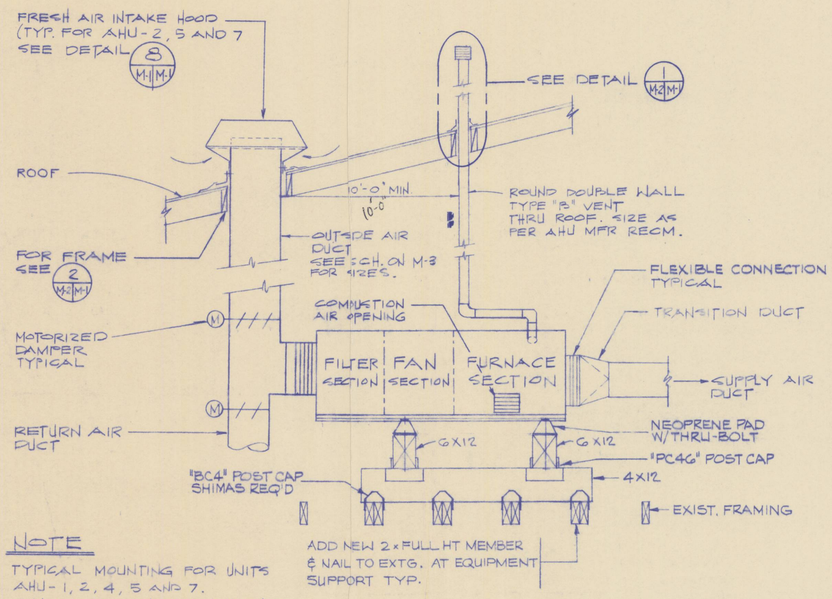

NOTE
1. TYPICAL MOUNTING FOR UNITS AHU-1, 2, 4, 5 AND 7.
2. AHU-1 AND 4 OUTSIDE AIR DUCT SHALL BE CONNECTED TO THE EXISTING CUPOLA SIMILAR TO AHU-3 AND 6.

AIR HANDLING UNIT DETAIL (3 / M-2 M-1)
NTS

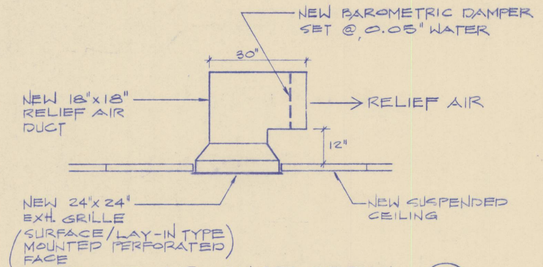

RELIEF AIR DUCT DETAIL (7 / M-2 M-1)

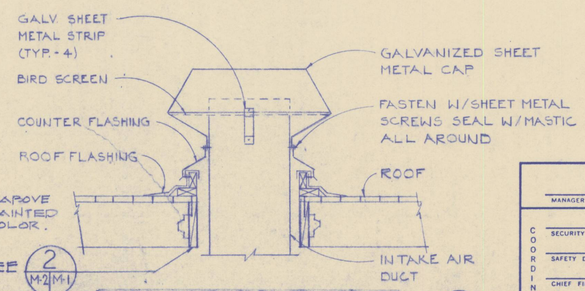

NOTE:
HOOD AND DUCT ABOVE ROOF SHALL BE PAINTED TO MATCH ROOF COLOR.

INTAKE AIR HOOD DETAIL (8 / M-1 M-1)
NTS

Substitution of round HAVAC ducting in lieu of square ducting is permitted so long as air flow and functionality, and fit/finish is maintained.

REVISION NO.	DATE	DESCRIPTION	AGENCY	BY

Pan Am World Services, Inc.

UNITED STATES AIR FORCE
HQ 6592d SUPPORT GROUP (AFSC)
LOS ANGELES AIR FORCE BASE

DESIGNED BY S. PEREZ
DRAWN BY R. N. MALLARD
CHECKED BY
SUBMITTED BY DATE

RENOVATE BUILDING 403
COMMUNITY CENTER
~LAO 89-1028
FORT MacARTHUR, CALIFORNIA
LOS ANGELES AIR FORCE BASE

MECHANICAL DETAILS

SPECIFICATION NO. 6592 /DE 9510289
DATE 10/16/88 SCALE NTS
DRAWING NUMBER 00403-5010289 (ATCH. 3)
M-1
SHEET 38 OF 48

COORDINATED: MANAGER ENGINEER — DATE; SECURITY — DATE; SAFETY DIVISION — DATE; CHIEF FIRE PROTECTION — DATE; COMMUNICATIONS ENGINEER — DATE; BIOENVIRONMENTAL ENGINEER — DATE

APPROVED: USING AGENCY — DATE; BASE CIVIL ENGINEER — DATE