U.S. DEPARTMENT OF AGRICULTURE
FOREST SERVICE, REGION 1

ROAD AND CULVERT PLANS FOR:

JIM BROWN CREEK CULVERT REPLACEMENT

ROAD #100

LOCHSA RANGER DISTRICT
CLEARWATER NATIONAL FOREST
CLEARWATER COUNTY, IDAHO

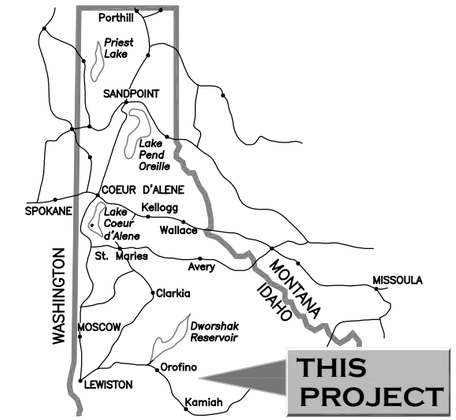

NORTHERN IDAHO LOCATION MAP

INDEX TO SHEETS

NO.	DESCRIPTION
1	COVER SHEET
2	SUMMARY OF QUANTITIES, GENERAL NOTES
3	ROADWAY PLAN & PROFILE & TYPICAL SECTION
4	CULVERT GENERAL LAYOUT
5	STREAM CHANNEL DETAILS
6	FOUNDATION PLAN
7–8	CULVERT FOUNDATION DETAILS
9–11	HEADWALL & WINGWALL DETAILS
XS1–XS2	ROADWAY CROSS SECTIONS

CONTRACTOR FURNISHED

RIPRAP SOURCE
CRUSHED SURFACING
BORROW SOURCE

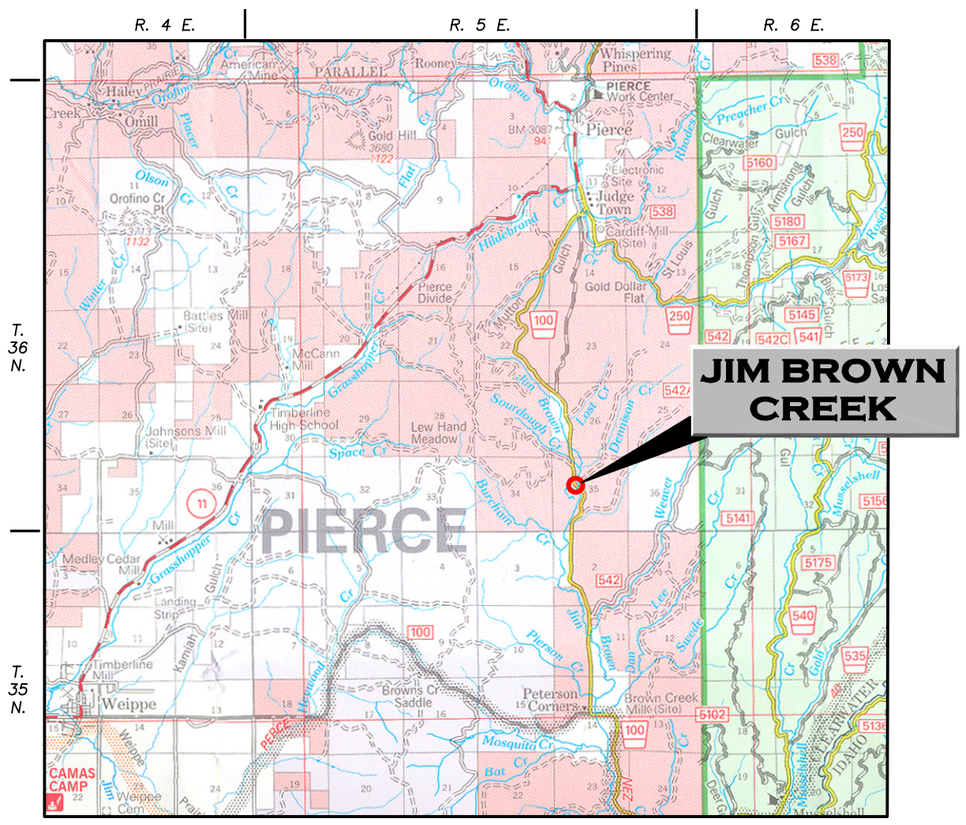

VICINITY MAP SCALE: 1/2" = 1 Mile

APPROVED:

_____ DATE_____
REGIONAL ENGINEER
NORTHERN REGION

APPROVED:

_____ DATE_____
FOREST SUPERVISOR
CLEARWATER NATIONAL FOREST

RECOMMENDED:

_____ DATE_____
FOREST ENGINEER
CLEARWATER NATIONAL FOREST

RECOMMENDED:

_____ DATE_____
DISTRICT RANGER
LOCHSA RANGER DISTRICT
CLEARWATER NATIONAL FOREST

DJ&A, P.C.
CONSULTING ENGINEERS & LAND SURVEYORS
3203 RUSSELL STREET, MISSOULA, MONTANA 59801–8591
PHONE 406/721–4320 FAX 406/549–6371

DRAWING NO. R____

SUMMARY OF ESTIMATED QUANTITIES

ITEM NO.	ITEM DESCRIPTION	MEASUREMENT		JIM BROWN CREEK CULVERT
		METHOD	UNIT	
15101	MOBILIZATION	LSQ	Lump Sum	1
15221	CONSTRUCTION SURVEYING AND STAKING	LSQ	Lump Sum	1
15708	DITCH CHECK DAM	AQ	Each	2
20102	CLEARING AND GRUBBING	LSQ	Lump Sum	1
20301	REMOVAL OF EXISTING 48" DIA. CULVERT	AQ	Each	2
20404	UNCLASSIFIED BORROW	AQ	Cubic Yard	30
20806	STRUCTURE EXCAVATION	LSQ	Lump Sum	1
25101A	PLACED RIPRAP, CLASS 1 MACHINE PLACED (COMMERCIAL SOURCE)	DQ	Cubic Yard	60
25101B	PLACED RIPRAP, CLASS 4 MACHINE PLACED (COMMERCIAL SOURCE)	DQ	Cubic Yard	15
30801	CRUSHED AGGREGATE, SURFACING (COMMERCIAL SOURCE)	DQ	Cubic Yard	148
55204	STRUCTURAL CONCRETE CLASS A(AE) FOR HEADWALL & WINGWALLS	DQ	Cubic Yard	28
553A02	PRECAST CONCRETE MEMBER, CULVERT FOOTING	AQ	Lineal Foot	98
55401	REINFORCING STEEL FOR HEADWALL & WINGWALLS	DQ	Pound	3360
60304	14' SPAN, 5'-7" RISE STRUCTURAL PLATE ARCH, 0.111" THICK	AQ	Lineal Foot	48
62201	EQUIPMENT RENTAL, HYDRAULIC EXCAVATOR WITH THUMB	AQ	Hour	8
62202	EQUIPMENT RENTAL, LARGE DUMP TRUCK	AQ	Hour	4
62503	SEEDING, DRY METHOD	LSQ	Lump Sum	1
62509	MULCHING, DRY METHOD	LSQ	Lump Sum	1

DQ = Design Quantity; AQ= Actual Quantity

GENERAL NOTES:

DESIGN: This structure is designed for HS-20 live loading in accordance with AASHTO Standard Specifications for Highway Bridges, 17th edition, 2002.

HYDROLOGY AND HYDRAULICS: This structure has been designed to pass a flood of 311 cfs (Q100) with a Headwater Depth to Culvert Rise ratio less than 1.

SPECIFICATIONS: Construct the project in compliance with Federal Highway Administration Standard Specifications for Construction of Road and Bridges on Federal Highway Projects (FP-03) and applicable Special Project Specifications.

EROSION CONTROL PLAN: Submit a soil erosion plan to the Contracting Officer and have it approved prior to beginning any work. Provide methods to minimize disturbance to the streambed and to prevent runoff from the construction site from entering directly into the stream. Construct temporary means to divert the flow of the live stream as necessary to perform work. Do not pump water from excavations directly into the live stream. Erosion control work is incidental to Item 20806.

DISPOSAL: All materials designated for removal become the property of the Contractor and are to be disposed of by removing from site in an environmentally safe manner in accordance with all Local, State and Federal requirements.

TEMPORARY TRAFFIC CONTROL: Submit a Temporary Traffic Control Plan to the Contracting Officer for review prior to construction. The road may be closed for a maximum of four (4) weeks during construction.

CONCRETE: Use Class A(AE) Concrete for Precast and Cast-in-Place members. The required 28-day compressive strength (F'c) is 4000 psi with an entrained air content of 5% ± 1%. Finish all precast elements with a Class 2- Rubbed Finish.

Make all concrete in accordance with an approved mix design. Chamfer all exposed edges of concrete and fillet all re-entrant angles 3/4" unless otherwise noted.

REINFORCING STEEL: Use reinforcing steel of the deformed type conforming to AASHTO M31 (ASTM A615) Grade 60. Concrete cover is as shown; where not shown it must conform to AASHTO. Cut and bend reinforcing steel in conformance with ACI 315. Lap splice bars 2' min.

HARDWARE AND STRUCTURAL STEEL: Use shapes, plates and bars meeting the requirements of AASHTO M270, Grade 50W, unless otherwise specified in these plans. Use hardware meeting the requirements of ASTM A325, Type 3, except as noted in the drawings.

Weld in accordance with the Bridge Welding Code, AWS D1.5.

UTLITIES: Locate all underground utilities prior to beginning construction.

FOREST SERVICE U.S. DEPARTMENT OF AGRICULTURE

REGION ONE

BY	DATE	REVISION DESCRIPTION

DESIGN CT PROJ. NO. 5380.05
DRAWN CT DATE APR 08
CHECKED MJ SURVEYED DJ&A

D&A, P.C.
CONSULTING ENGINEERS & LAND SURVEYORS
3203 Russell Street, Missoula, Montana 59801-8591
Phone 406/721-4320 Fax 406/549-6371

USFS - CLEARWATER N.F.
JIM BROWN CREEK
CULVERT REPLACEMENT

SUMMARY OF QUANTITIES
AND GENERAL NOTES

ROAD CENTERLINE COORDINATE TABLE

Point	Northing	Easting	Elevation	Description
700	9949.4896	10034.4068	3000.14	Sta. 1+60
701	9967.1556	10025.0334	3000.22	Sta. 1+80
702	9985.1822	10016.3739	3000.24	Sta. 2+00
703	10003.5407	10008.4422	3000.18	Sta. 2+20
704	10012.8353	10004.7533	3000.12	Sta. 2+30
705	10022.2017	10001.2510	3000.04	Sta. 2+40
706	10031.6363	9997.9367	2999.94	Sta. 2+50
707	10033.7492	9997.2234	2999.91	Sta. 2+52.23
708	10041.1354	9994.8118	2999.82	Sta. 2+60
709	10050.6950	9991.8774	2999.68	Sta. 2+70
710	10060.3114	9989.1348	2999.52	Sta. 2+80
711	10079.6991	9984.2293	2999.20	Sta. 3+00
712	10099.2674	9980.1030	2998.92	Sta. 3+20
713	10118.9851	9976.7625	2998.71	Sta. 3+40
714	10138.8206	9974.2132	2998.59	Sta. 3+60

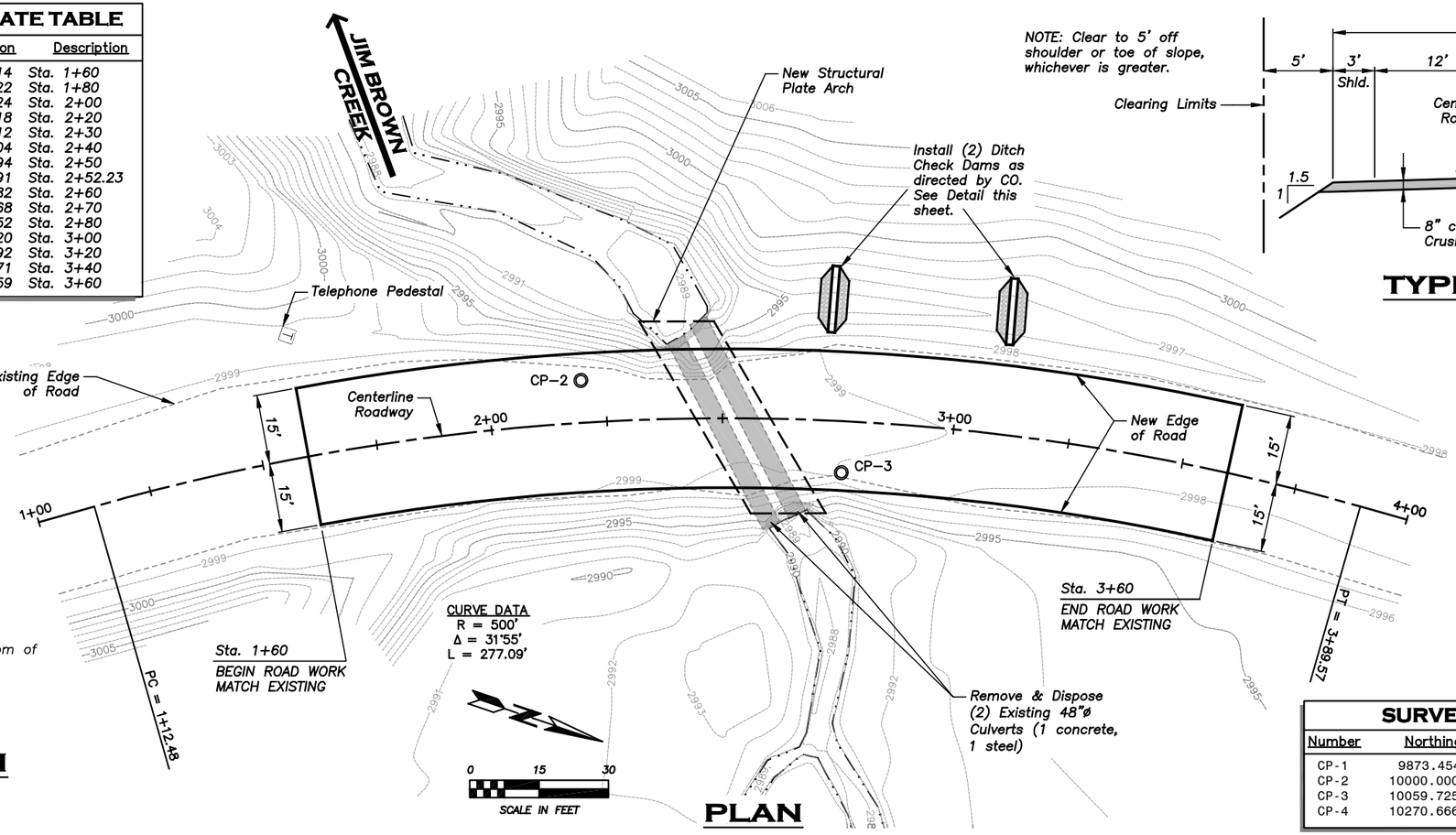

PLAN

NOTE: Clear to 5' off shoulder or toe of slope, whichever is greater.

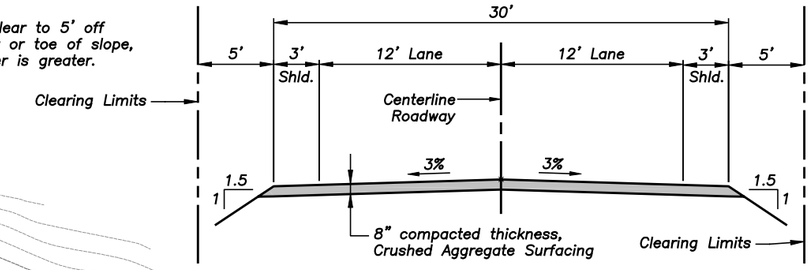

TYPICAL SECTION

Not to Scale

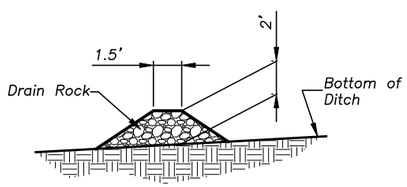

DITCH CHECK DAM

Not to Scale

SURVEY CONTROL COORDINATES

Number	Northing	Easting	Elevation	Description
CP-1	9873.4541	10059.0093	2999.25	DJ&A Red Platic Cap
CP-2	10000.0000	10000.0000	3000.00	NAIL
CP-3	10059.7250	10000.8490	2998.91	NAIL
CP-4	10270.6664	9953.3735	3001.88	DJ&A Red Platic Cap

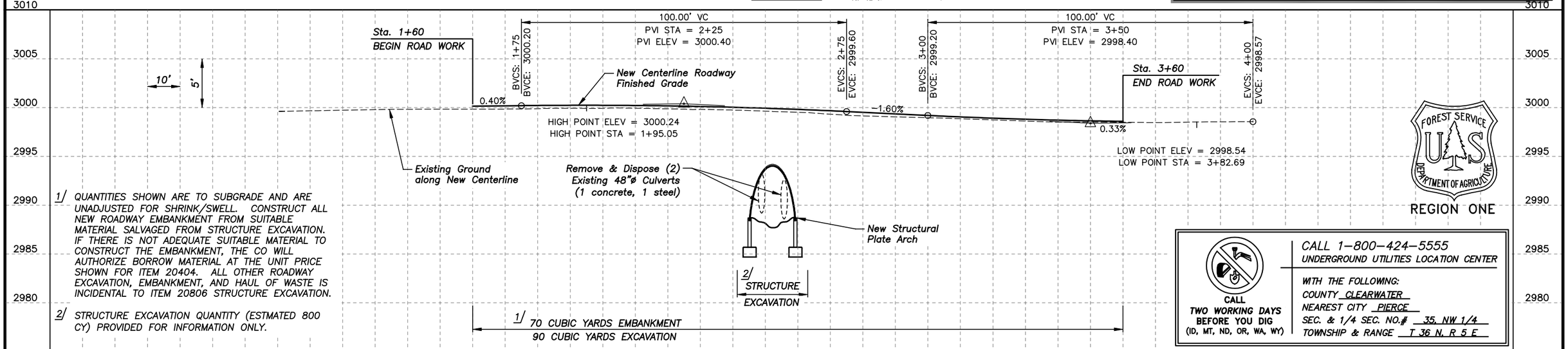

1/ QUANTITIES SHOWN ARE TO SUBGRADE AND ARE UNADJUSTED FOR SHRINK/SWELL. CONSTRUCT ALL NEW ROADWAY EMBANKMENT FROM SUITABLE MATERIAL SALVAGED FROM STRUCTURE EXCAVATION. IF THERE IS NOT ADEQUATE SUITABLE MATERIAL TO CONSTRUCT THE EMBANKMENT, THE CO WILL AUTHORIZE BORROW MATERIAL AT THE UNIT PRICE SHOWN FOR ITEM 20404. ALL OTHER ROADWAY EXCAVATION, EMBANKMENT, AND HAUL OF WASTE IS INCIDENTAL TO ITEM 20806 STRUCTURE EXCAVATION.

2/ STRUCTURE EXCAVATION QUANTITY (ESTMATED 800 CY) PROVIDED FOR INFORMATION ONLY.

FOREST SERVICE U.S. DEPARTMENT OF AGRICULTURE

REGION ONE

CALL TWO WORKING DAYS BEFORE YOU DIG (ID, MT, ND, OR, WA, WY)

CALL 1-800-424-5555
UNDERGROUND UTILITIES LOCATION CENTER

WITH THE FOLLOWING:
COUNTY CLEARWATER
NEAREST CITY PIERCE
SEC. & 1/4 SEC. NO.# 35, NW 1/4
TOWNSHIP & RANGE T 36 N, R 5 E

BY	DATE	REVISION DESCRIPTION

DESIGN CT PROJ. NO. 5380.05
DRAWN CT DATE APR 08
CHECKED MJ SURVEYED DJ&A

DJ&A, P.C.
CONSULTING ENGINEERS & LAND SURVEYORS
3203 Russel Street, Missoula, Montana 59801-6591
Phone 406/721-4320 Fax 406/549-6371

USFS - CLEARWATER N.F.
JIM BROWN CREEK
CULVERT REPLACEMENT

ROADWAY PLAN & PROFILE

SHEET 3 OF 11

REGION ONE

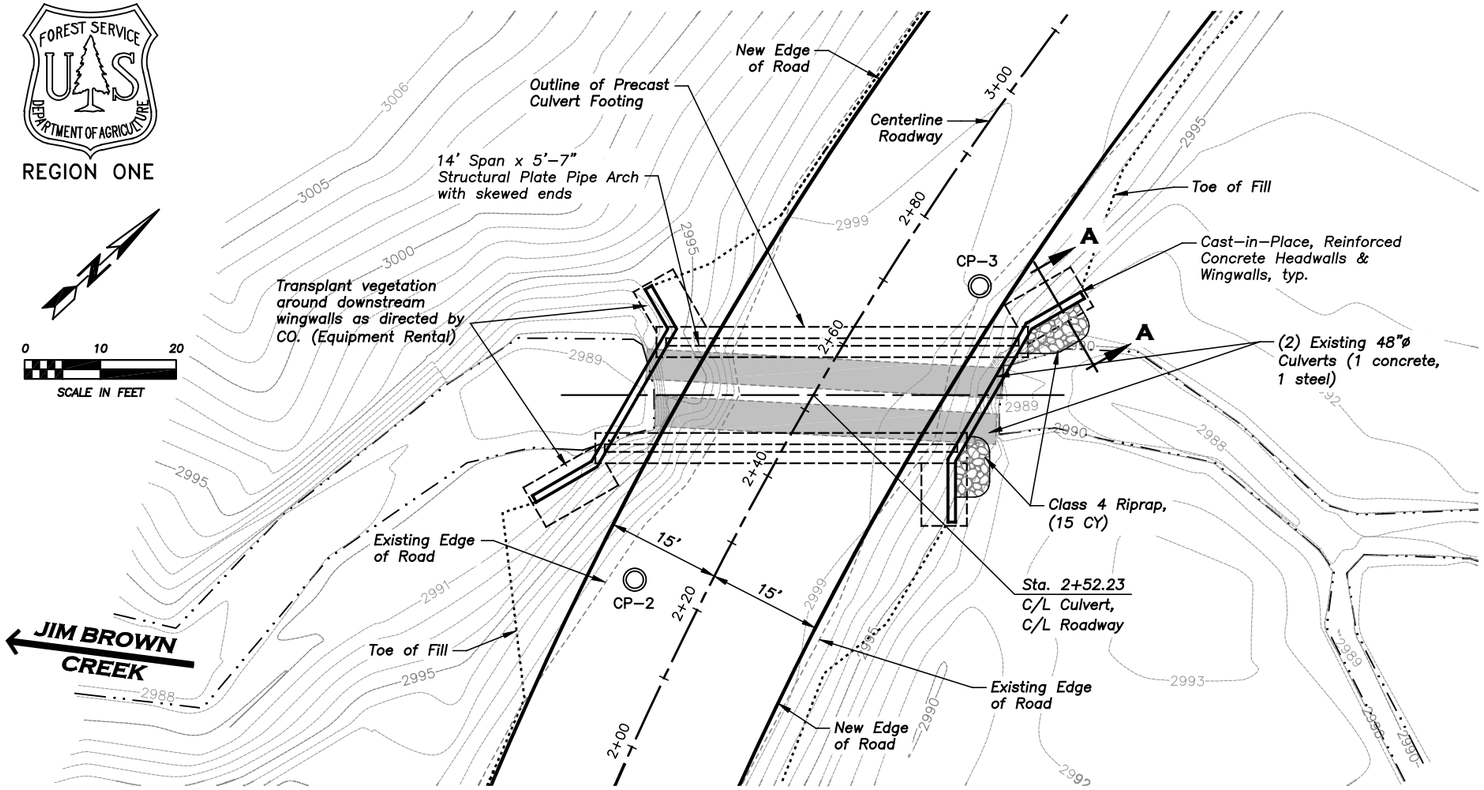

PLAN

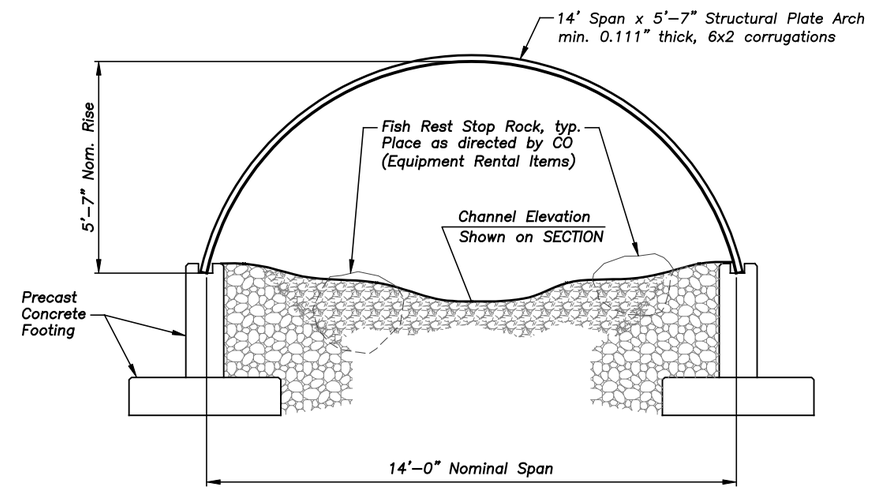

TYPICAL SECTION

Scale: 1/4" = 1'

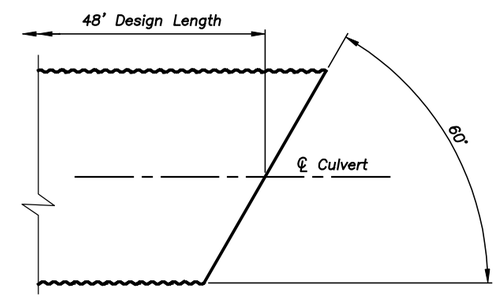

CULVERT END PLAN

Not to Scale

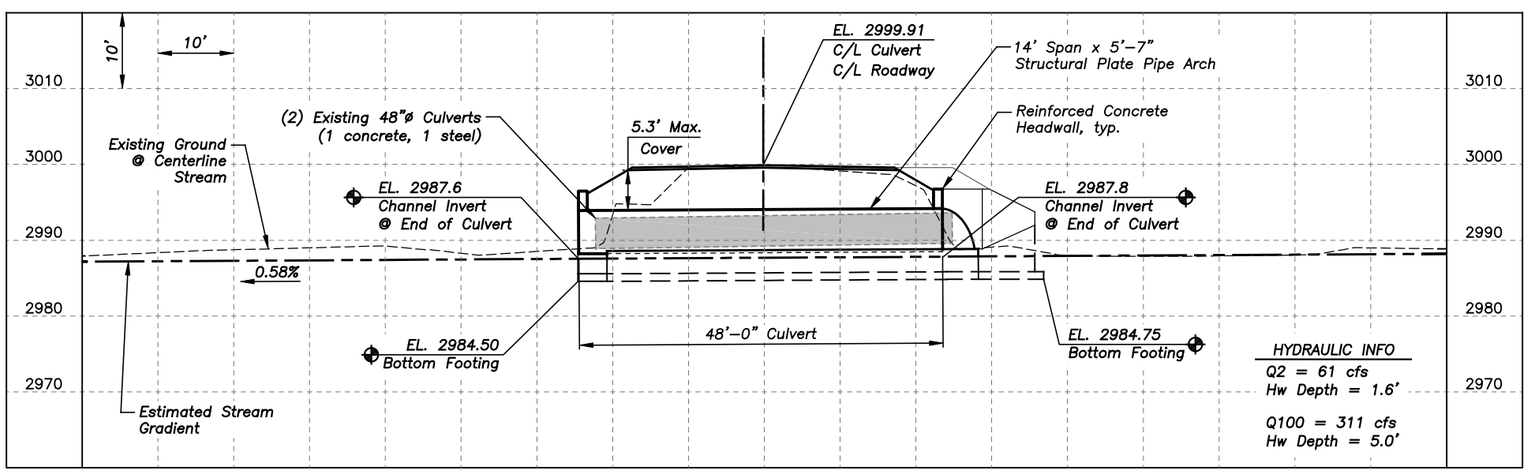

SECTION

CUT ALONG CENTERLINE CULVERT

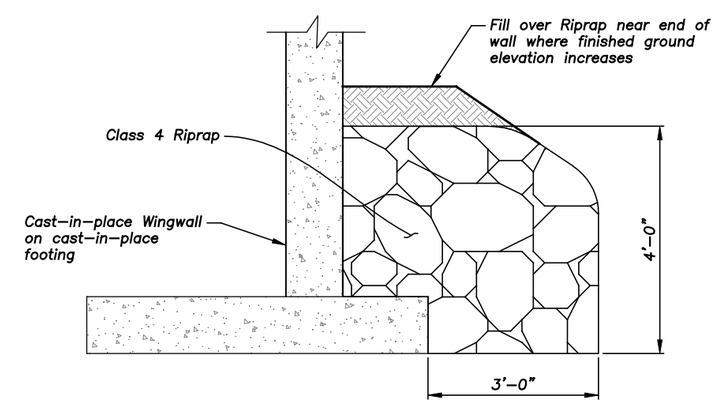

SECTION A-A

TYPICAL RIPRAP SECTION
Not to Scale

BY	DATE	REVISION DESCRIPTION

DESIGN CT PROJ. NO. 5380.05
DRAWN CT DATE APR 08
CHECKED MJ SURVEYED DJ&A

DJ&A, P.C.
CONSULTING ENGINEERS & LAND SURVEYORS
3203 Russell Street, Missoula, Montana 59801-8591
Phone 406/721-4320 Fax 406/549-6371

USFS - CLEARWATER N.F.
JIM BROWN CREEK
CULVERT REPLACEMENT

CULVERT GENERAL LAYOUT

SHEET 4 OF 11

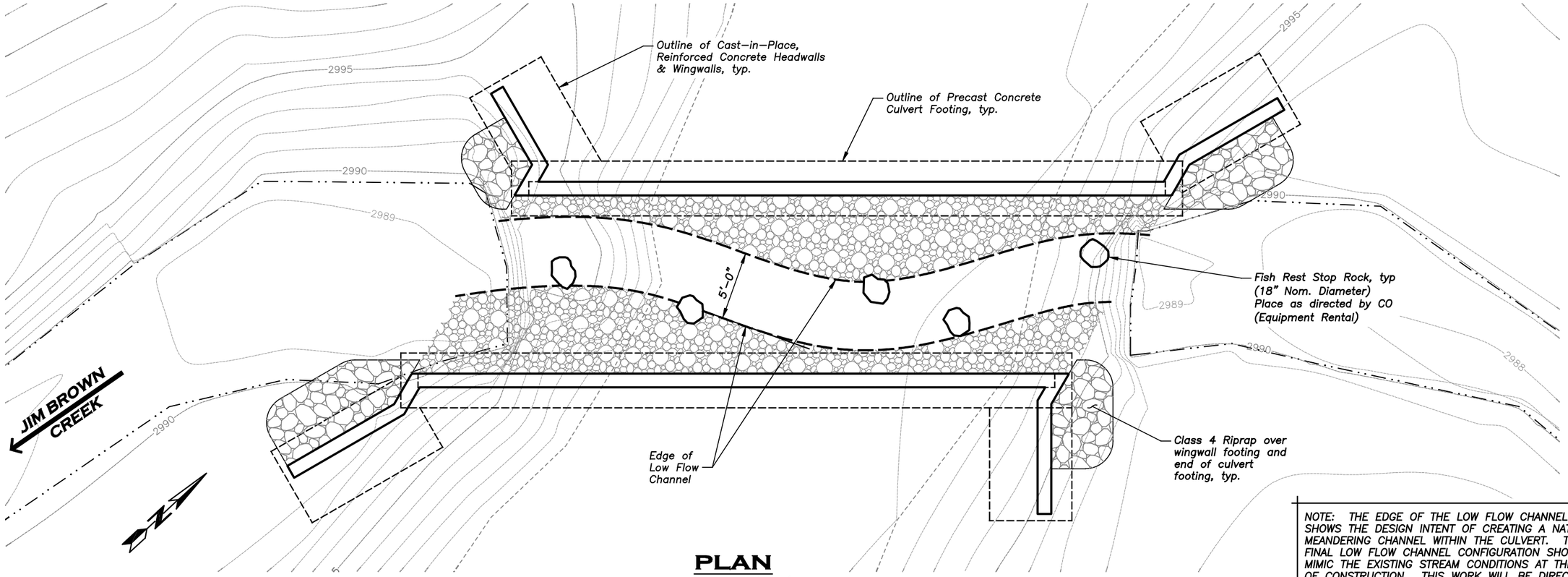

PLAN

Scale: 1–1/2" = 1'

NOTE: THE EDGE OF THE LOW FLOW CHANNEL SHOWS THE DESIGN INTENT OF CREATING A NATURAL, MEANDERING CHANNEL WITHIN THE CULVERT. THE FINAL LOW FLOW CHANNEL CONFIGURATION SHOULD MIMIC THE EXISTING STREAM CONDITIONS AT THE TIME OF CONSTRUCTION. THIS WORK WILL BE DIRECTED BY THE CO.

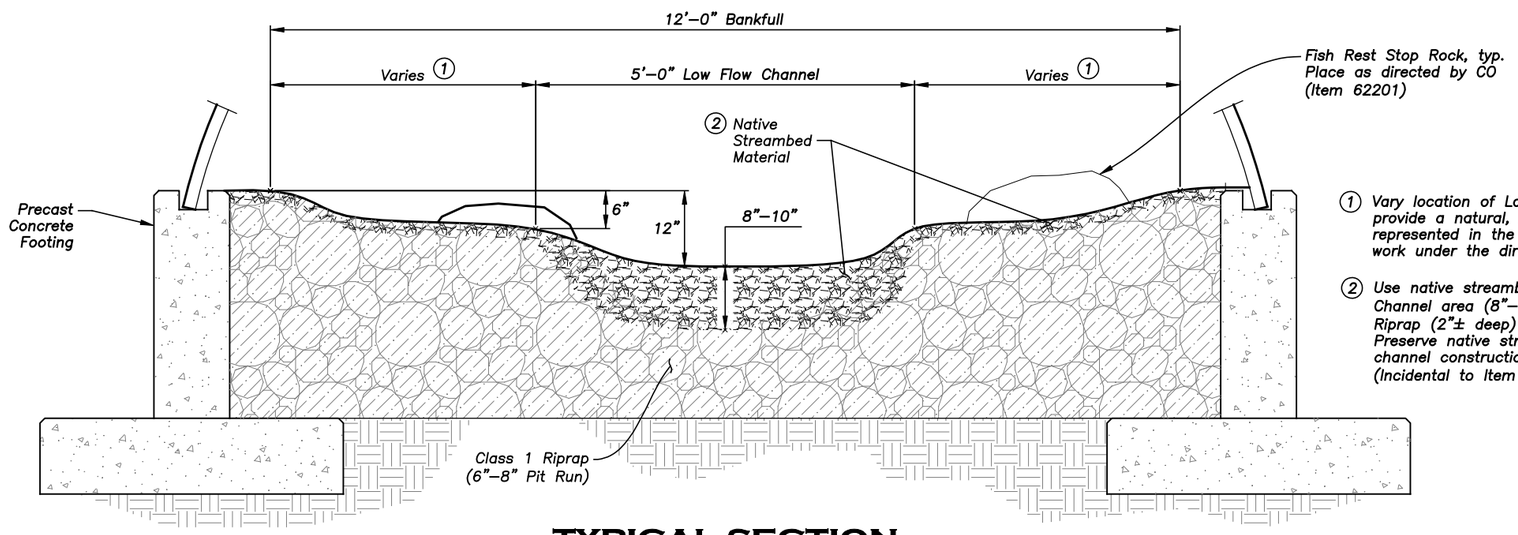

TYPICAL SECTION

Scale: 1/2" = 1'

(1) Vary location of Low Flow channel within pipe to provide a natural, meandering stream, as represented in the PLAN view above. Complete work under the direction of the CO.

(2) Use native streambed material to fill Low Flow Channel area (8"–10" deep) and to top Class 1 Riprap (2"± deep) outside of low flow channel. Preserve native streambed material to use for channel construction from the excavation. (Incidental to Item 25101A)

FOREST SERVICE U.S. DEPARTMENT OF AGRICULTURE

REGION ONE

BY	DATE	REVISION DESCRIPTION

DESIGN CT PROJ. NO. 5380.05
DRAWN CT DATE APR 08
CHECKED MJ SURVEYED DJ&A

D&A, P.C. CONSULTING ENGINEERS & LAND SURVEYORS
3203 Russell Street, Missoula, Montana 59801-8591
Phone 406/721-4320 Fax 406/549-6371

USFS - CLEARWATER N.F.
JIM BROWN CREEK
CULVERT REPLACEMENT

STREAM CHANNEL DETAILS

SHEET 5 OF 11

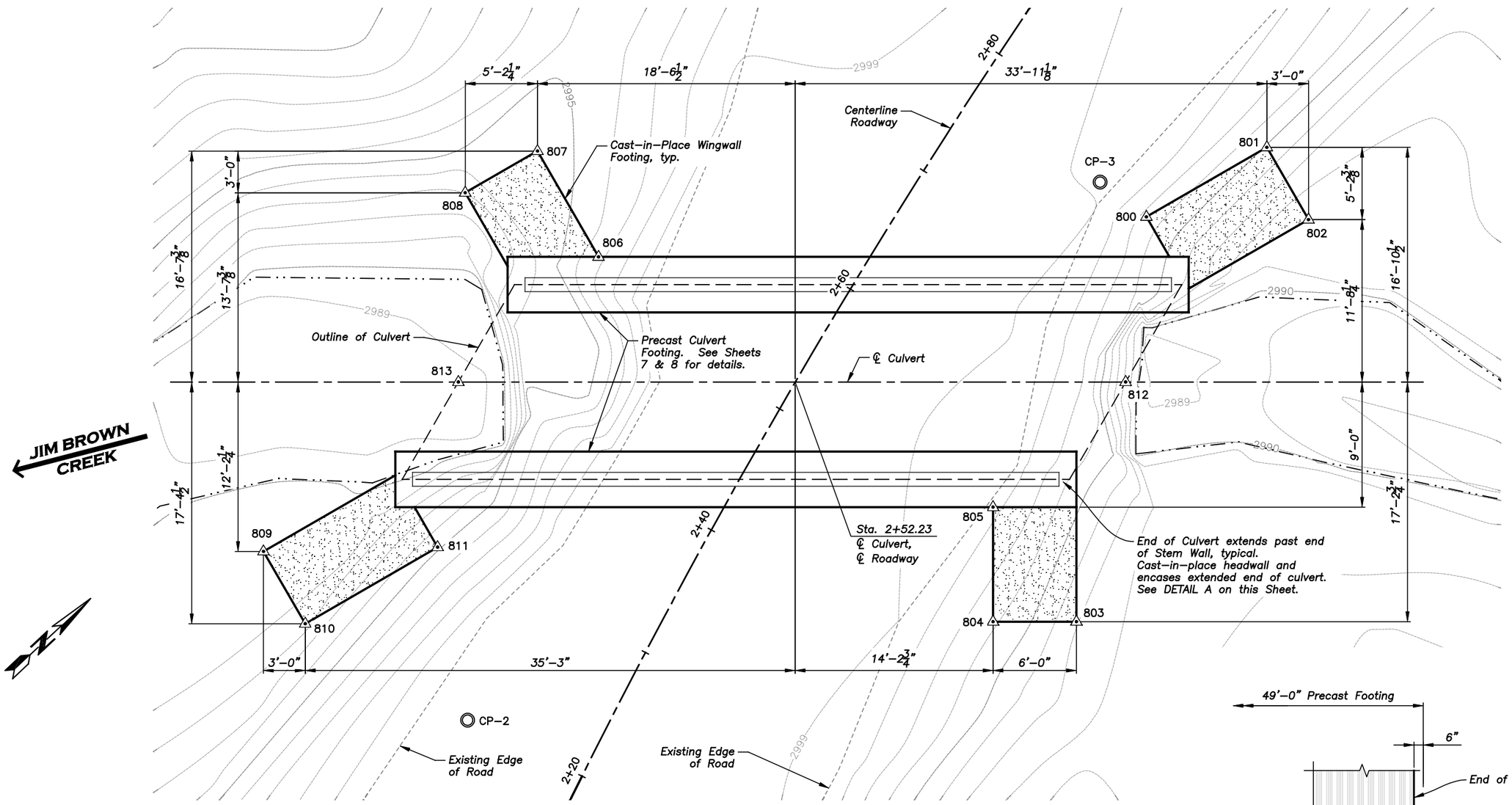

PLAN

Scale: 1–1/2" = 1'–0"

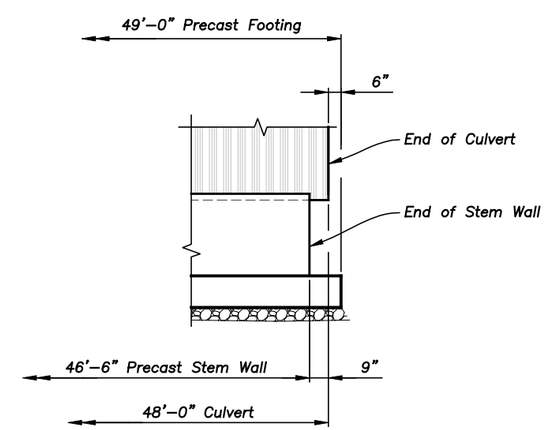

DETAIL A — CUVLERT END ELEVATION

Not to Scale — TYPICAL ALL 4 CORNERS

LAYOUT POINT COORDINATE LISTING

Number	Northing	Easting	Elevation	Description
800	10060.5810	10004.9254	2984.75	Bottom of Wingwall Footing
801	10070.3905	10006.8677	2984.75	Bottom of Wingwall Footing
802	10069.2252	10012.7534	2984.75	Bottom of Wingwall Footing
803	10037.6183	10023.5136	2984.75	Bottom of Wingwall Footing
804	10033.1038	10019.5615	2984.75	Bottom of Wingwall Footing
805	10038.5261	10013.3675	2984.75	Bottom of Wingwall Footing
806	10029.0319	9981.1334	2984.50	Bottom of Wingwall Footing
807	10030.7389	9972.5121	2984.50	Bottom of Wingwall Footing
808	10024.8532	9971.3468	2984.50	Bottom of Wingwall Footing
809	9996.9445	9981.1967	2984.50	Bottom of Wingwall Footing
810	9995.7792	9987.0824	2984.50	Bottom of Wingwall Footing
811	10006.5697	9989.2189	2984.50	Bottom of Wingwall Footing
812	10051.6334	10012.8805	2984.75	Upstream Bottom of Footing @ ℄ Culvert
813	10015.5172	9981.2638	2984.50	Downstream Bottom of Footing @ ℄ Culvert

BY	DATE	REVISION DESCRIPTION

DESIGN CT PROJ. NO. 5380.05
DRAWN CT DATE JAN 08
CHECKED MJ SURVEYED DJ&A

DJ&A, P.C.
CONSULTING ENGINEERS & LAND SURVEYORS
3203 Russell Street, Missoula, Montana 59801-8591
Phone 406/721-4320 Fax 406/549-6371

USFS - CLEARWATER N.F.
JIM BROWN CREEK
CULVERT REPLACEMENT

FOUNDATION PLAN

SHEET 6 OF 11

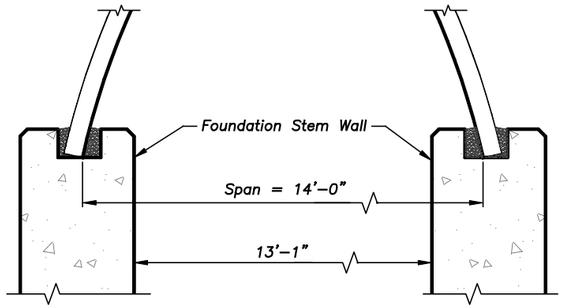

INSTALLATION DETAIL

Not to Scale

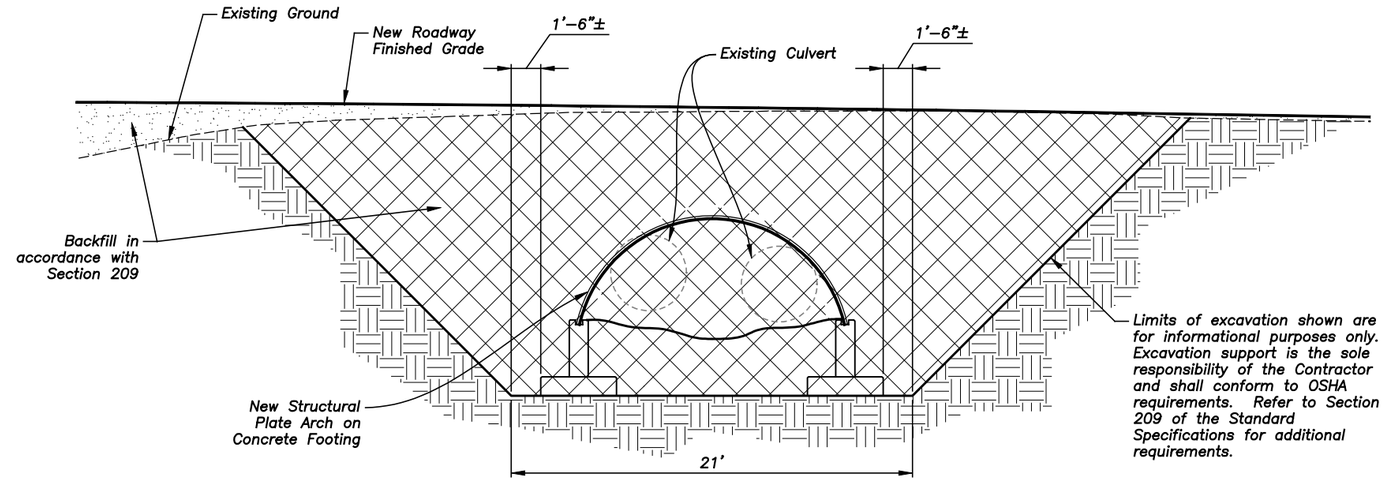

TYPICAL CULVERT INSTALLATION

Not to Scale

FOR INFORMATIONAL PURPOSES ONLY:
Cross Hatching represents the area included as Structure Excavation. The volume of Structure Excavation is estimated to be 800 C.Y. Structure Excavation is not paid for separately but is incidental to other items. It is the responsibility of the Contractor to accurately estimate the volume of excavation required to safely construct the project as shown on these PLANS.

NOTES:

1. 2" Clear cover unless otherwise noted.
2. c.c. = center–to–center

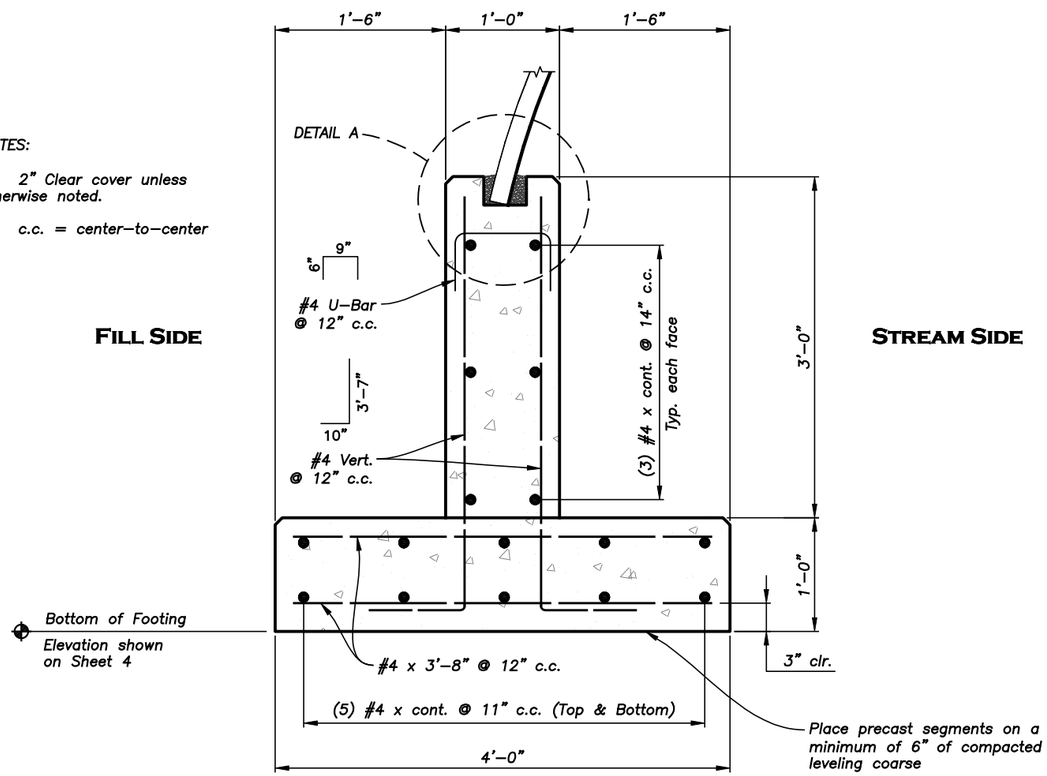

FOUNDATION DETAIL

Scale: 3/4" = 1'–0"

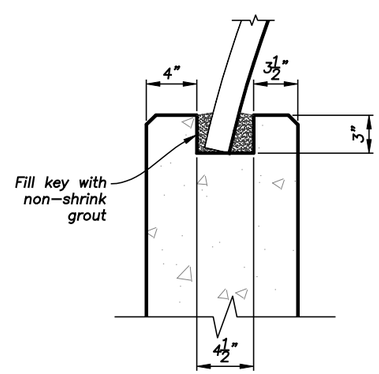

DETAIL A

Scale: 1" = 1'–0"

FOUNDATION NOTES:

1. A FOUNDATION INVESTIGATION HAS NOT BEEN CONDUCTED. IF BEDROCK IS ENCOUNTERED WITHIN THE LIMITS OF THE FOUNDATION SHOWN ON THE DRAWINGS NOTIFY THE CO IMMEDIATELY. IN NO CASE SHOULD THE FOOTING BE PLACED DIRECTLY ON LARGE BOULDERS OR RANDOM OUTCROPPINGS OF BEDROCK WITHOUT PRIOR APPROVAL.
2. PREPARE FOUNDATION IN ACCORDANCE WITH SECTION 209 OF THE SPECIFICATIONS. FOUNDATION MUST BE APPROVED IN ACCORDANCE WITH SECTION 208.04 PRIOR TO PLACING THE LEVELING COARSE.

INFORMATIONAL QUANTITIES:

ITEM DESCRIPTION	UNIT	QUANTITY
STRUCTURAL CONCRETE, CLASS A(AE)	Cubic Yard	25
REINFORCING STEEL	Pounds	2200

Informational Quantities shown above are for the precast culvert footing only and considered incidental to Item 553A02.

FOREST SERVICE U.S. DEPARTMENT OF AGRICULTURE
REGION ONE

BY	DATE	REVISION DESCRIPTION

DESIGN CT PROJ. NO. 5380.05
DRAWN CT DATE APR 08
CHECKED MJ SURVEYED DJ&A

D&A, P.C. CONSULTING ENGINEERS & LAND SURVEYORS
3203 Russell Street, Missoula, Montana 59801-8591
Phone 406/721-4320 Fax 406/549-6371

USFS - CLEARWATER N.F.
JIM BROWN CREEK
CULVERT REPLACEMENT

CULVERT FOUNDATION DETAILS

SHEET 7 OF 11

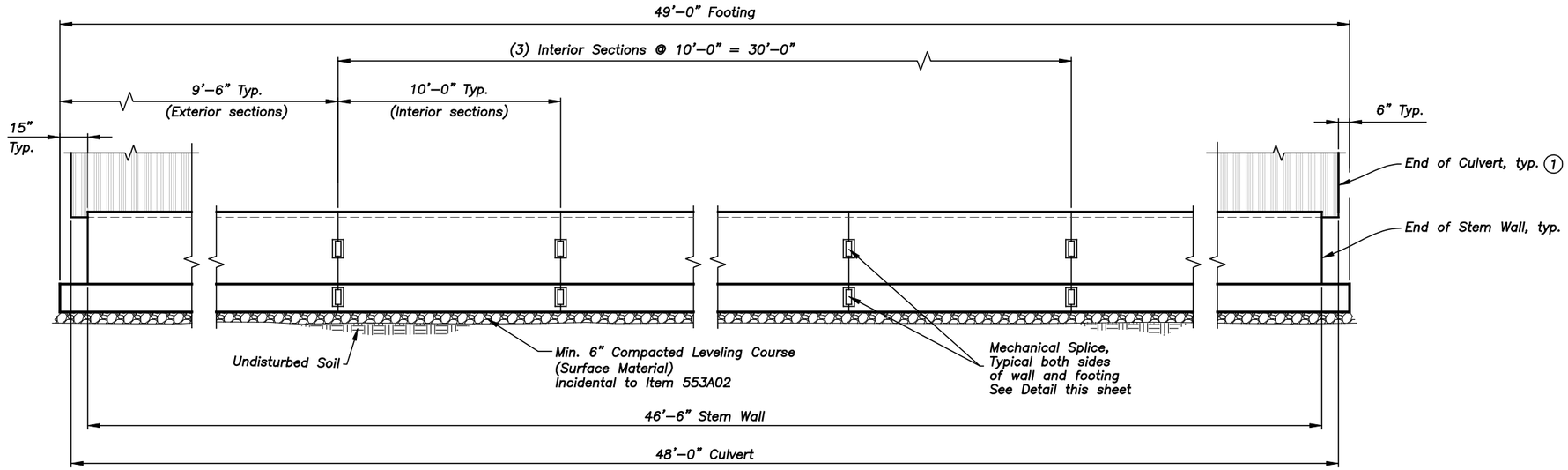

1 End of Culvert extends past end of Stem Wall. Cast–in–place headwall and encases extended end of culvert.

FOUNDATION ELEVATION

No Scale

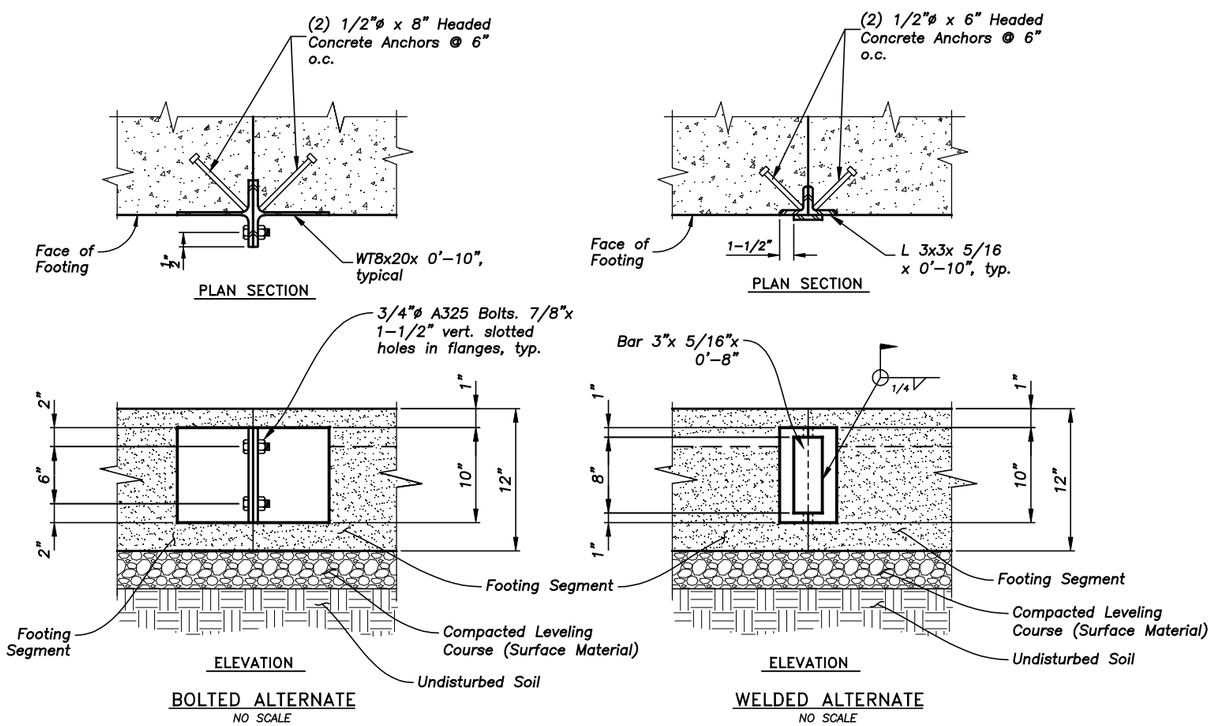

MECHANICAL SPLICE DETAIL

No Scale

NOTE: FOOTING SPLICE SHOWN WALL SPLICE SIMILAR. ALTERNATE CONNECTION DETAILS MAY BE SUBMITTED.

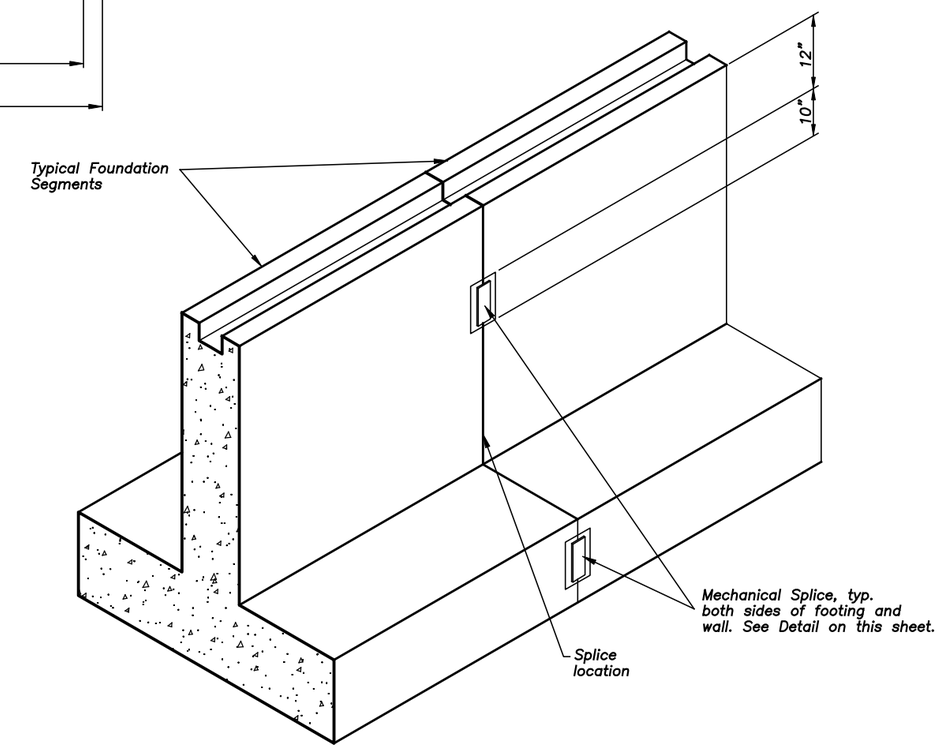

TYPICAL PRECAST FOUNDATION SEGMENTS

NO SCALE

NOTES:

PRIOR TO FABRICATING PRECAST FOOTINGS SUBMIT FOR APPROVAL SHOP DRAWINGS DETAILING SEGMENT LENGTHS, SPLICE CONNECTIONS, PROPOSED CONCRETE MIX DESIGN, PICK LOCATIONS, AND SELECTED CONNECTION FOR CULVERT.

FOREST SERVICE U S DEPARTMENT OF AGRICULTURE

REGION ONE

BY	DATE	REVISION DESCRIPTION

DESIGN CT PROJ. NO. 5380.05
DRAWN CT DATE APR 08
CHECKED MJ SURVEYED DJ&A

DJ&A, P.C.
CONSULTING ENGINEERS & LAND SURVEYORS
3203 Russell Street, Missoula, Montana 59801-8591
Phone 406/721-4320 Fax 406/549-6371

USFS - CLEARWATER N.F.
JIM BROWN CREEK
CULVERT REPLACEMENT

PRECAST FOOTING DETAILS

SHEET 8 OF 11

REGION ONE

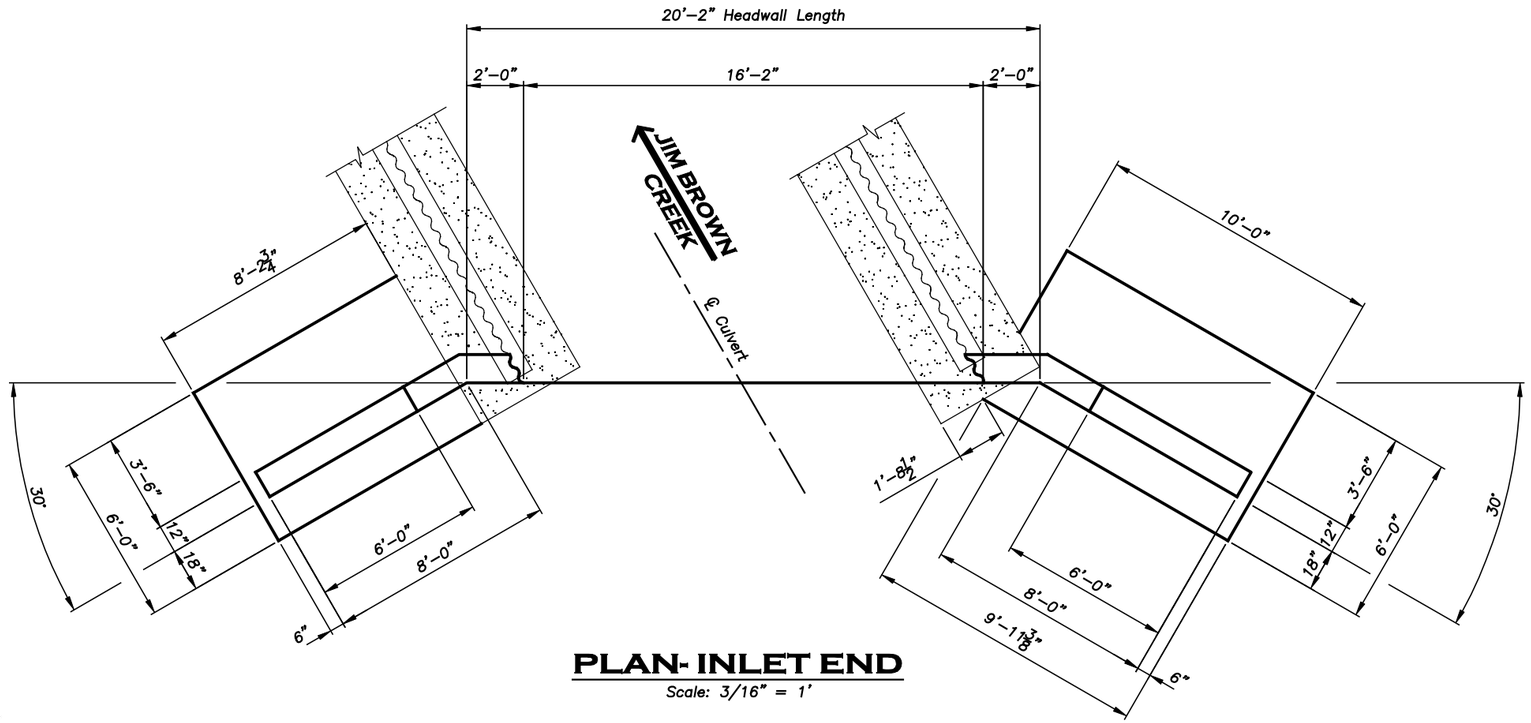

PLAN- INLET END

Scale: 3/16" = 1'

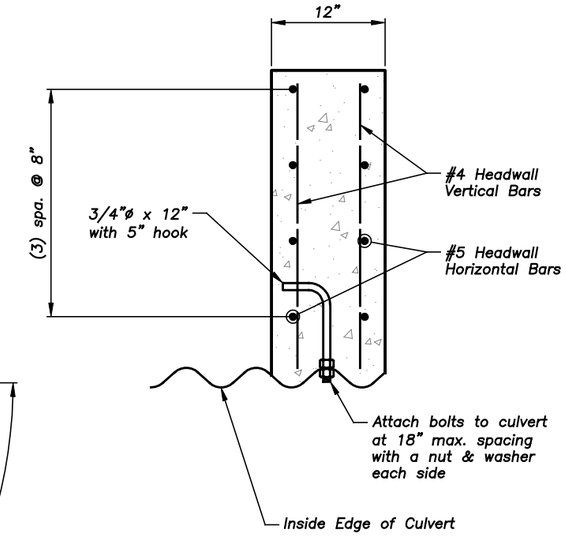

SECTION A-A

Not to Scale

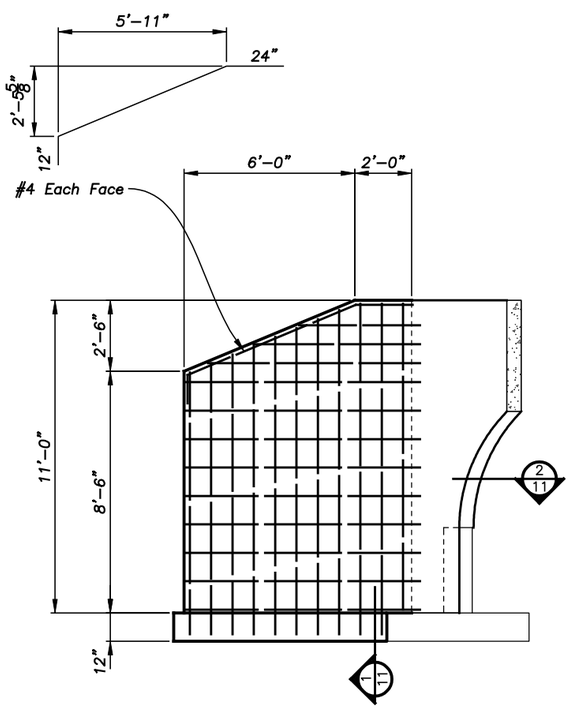

WINGWALL ELEVATION

Scale: 3/16" = 1'

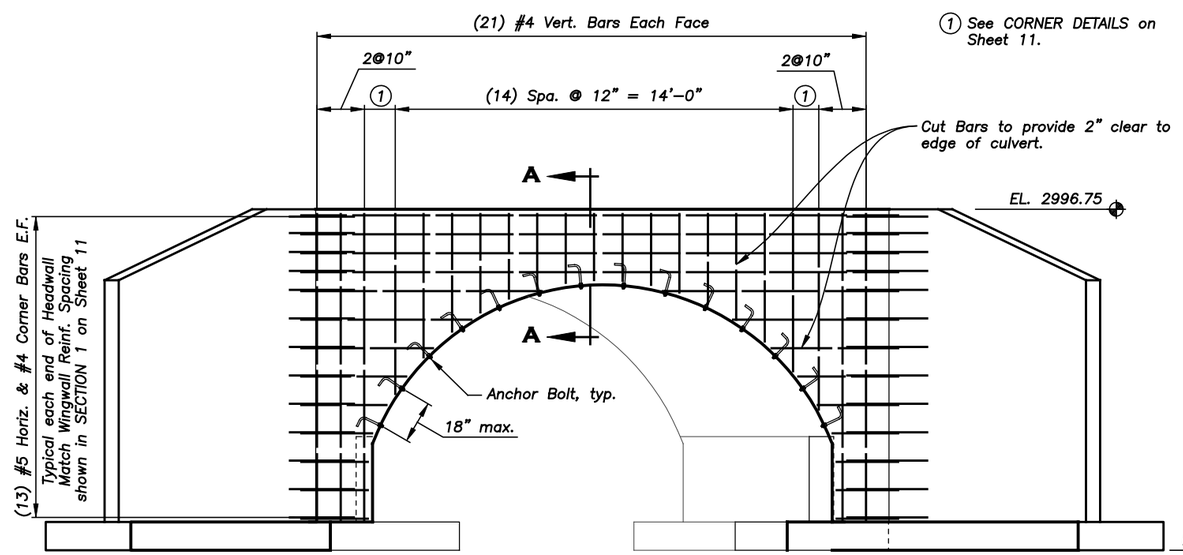

1 See CORNER DETAILS on Sheet 11.

NOTE: Footing Reinforcing not shown for clarity.

ELEVATION - INLET HEADWALL

Scale: 3/16" = 1'

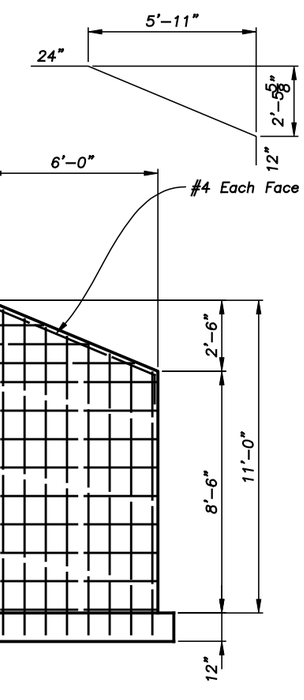

WINGWALL ELEVATION

Scale: 3/16" = 1'

BY	DATE	REVISION DESCRIPTION

DESIGN CT PROJ. NO. 5380.05
DRAWN CT DATE APR 08
CHECKED MJ SURVEYED DJ&A

DJ&A, P.C.
CONSULTING ENGINEERS & LAND SURVEYORS
3203 Russell Street, Missoula, Montana 59801-8591
Phone 406/721-4320 Fax 406/549-6371

USFS - CLEARWATER N.F.
JIM BROWN CREEK
CULVERT REPLACEMENT

INLET HEADWALL & WINGWALL DETAILS

SHEET 9 OF 11

REGION ONE

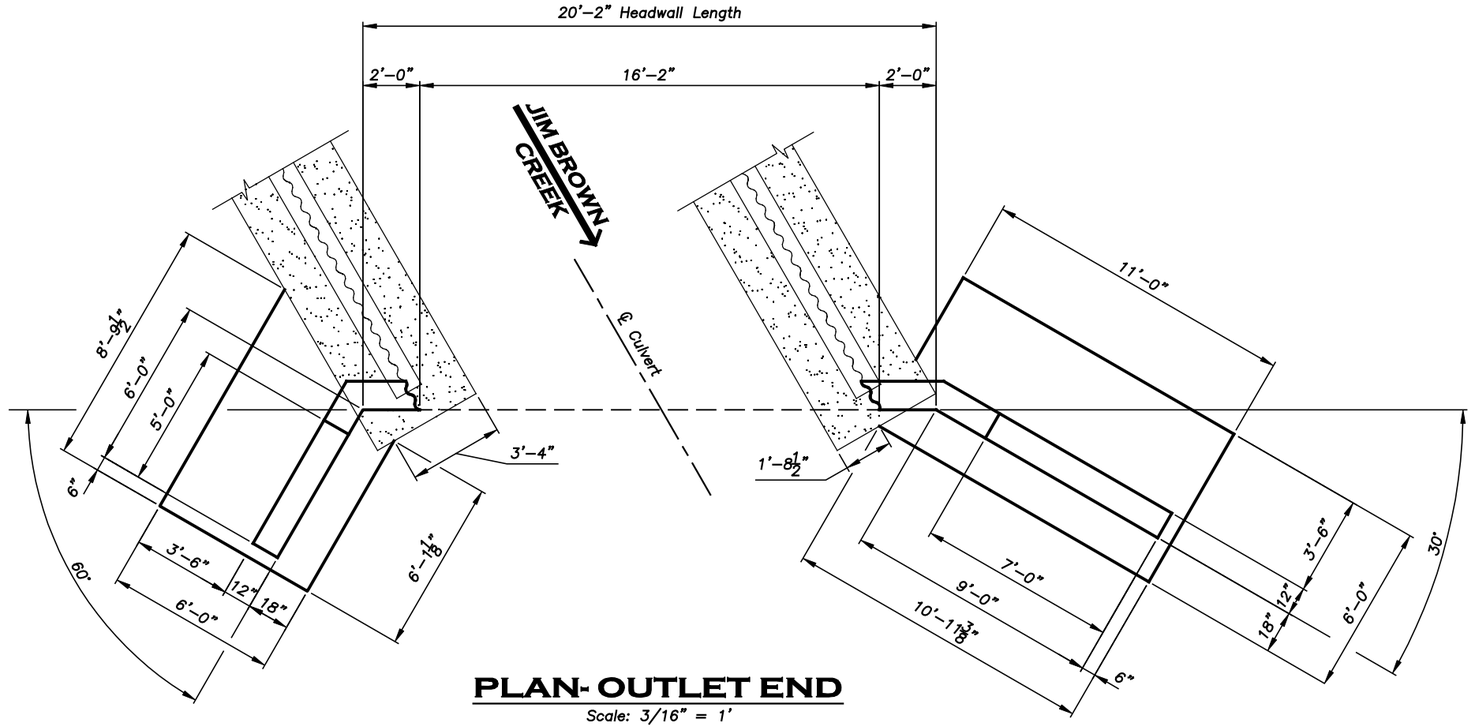

PLAN- OUTLET END

Scale: 3/16" = 1'

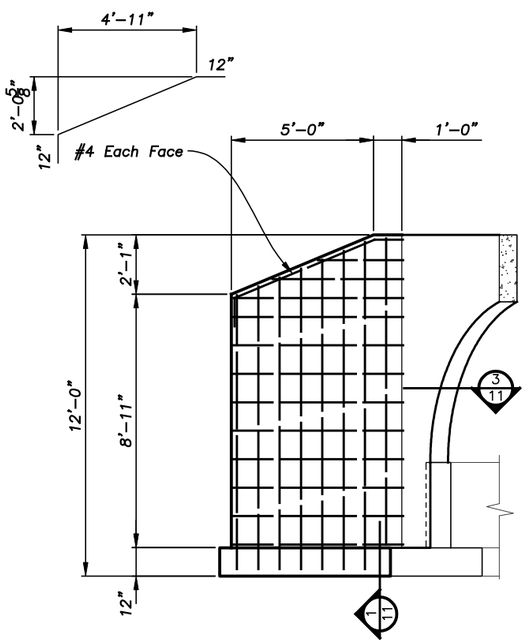

WINGWALL ELEVATION

Scale: 3/16" = 1'

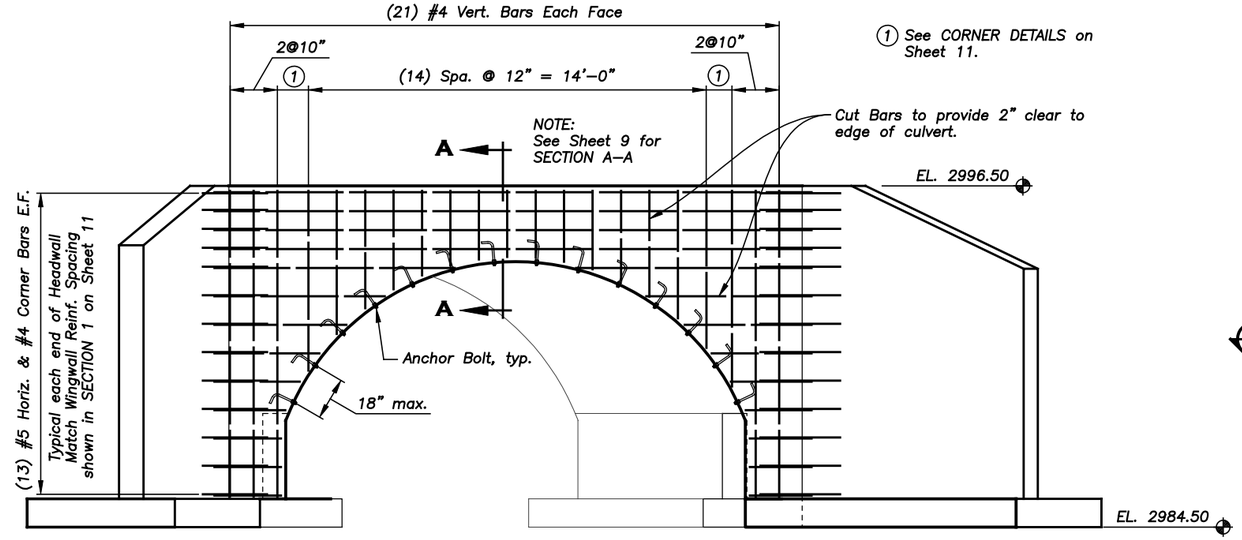

ELEVATION- OUTLET HEADWALL

Scale: 3/16" = 1'

NOTE: Footing Reinforcing not shown for clarity.

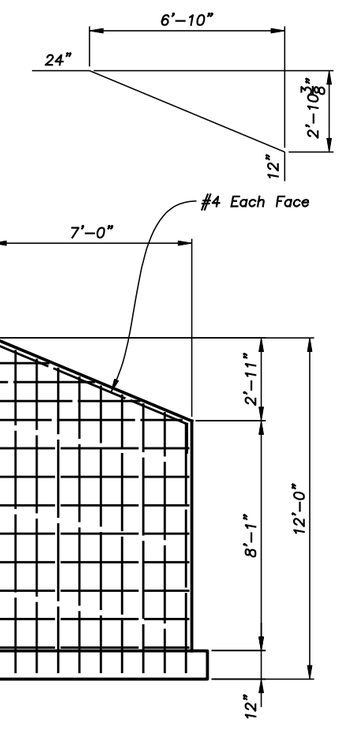

WINGWALL ELEVATION

Scale: 3/16" = 1'

BY	DATE	REVISION DESCRIPTION

DESIGN CT PROJ. NO. 5380.05
DRAWN CT DATE APR 08
CHECKED MJ SURVEYED DJ&A

DJ&A, P.C.
CONSULTING ENGINEERS & LAND SURVEYORS
3203 Russell Street, Missoula, Montana 59801-8591
Phone 406/721-4320 Fax 406/549-6371

USFS - CLEARWATER N.F.
JIM BROWN CREEK
CULVERT REPLACEMENT

OUTLET HEADWALL & WINGWALL DETAILS

SHEET 10 OF 11

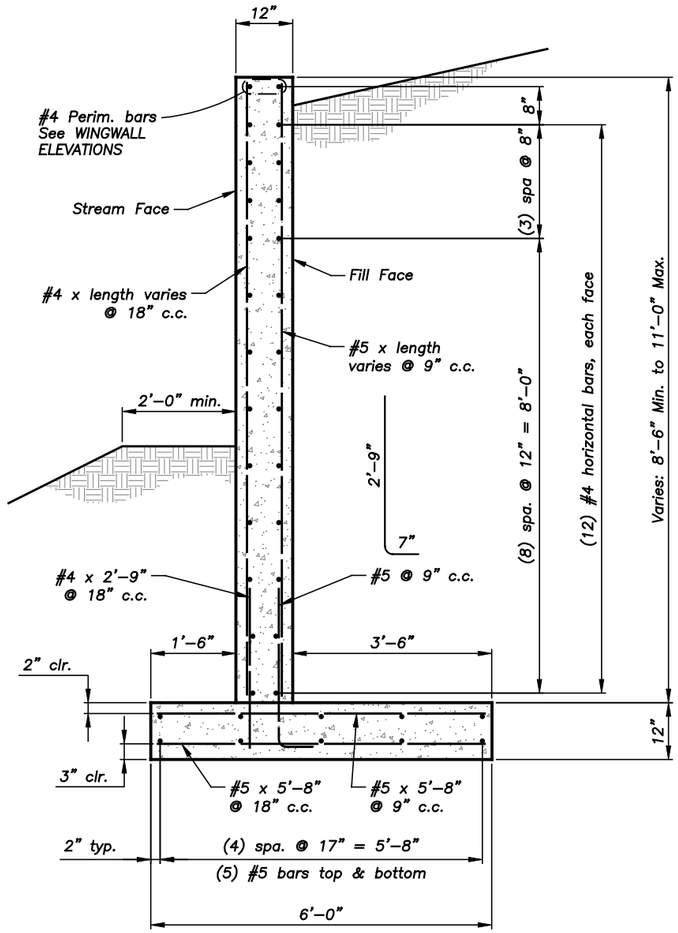

1/11 **SECTION**
Scale: 3/16" = 1'–0"

NOTE:

c.c. = center–to–center spacing

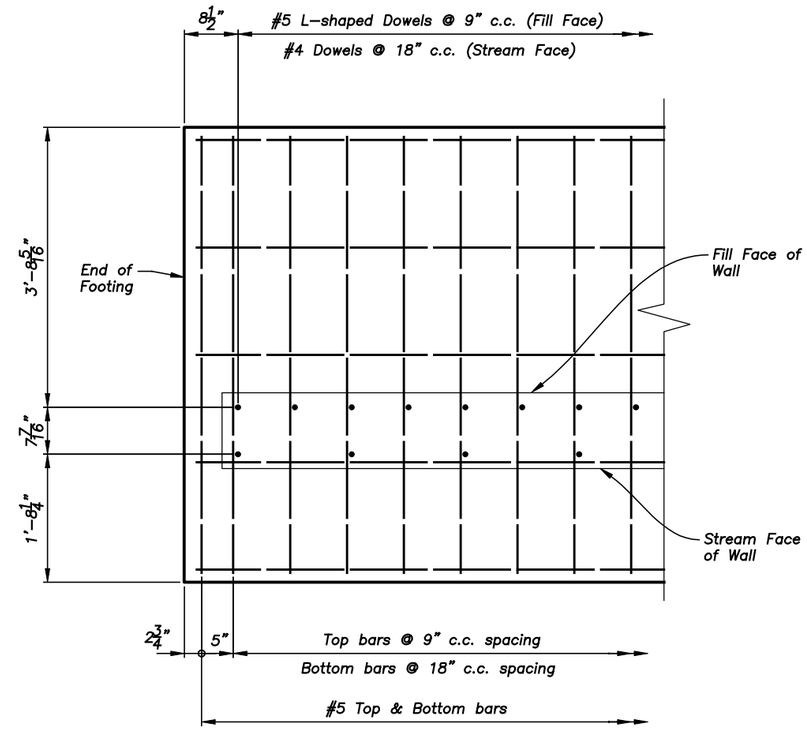

TYPICAL WINGWALL FOOTING REINFORCING

Scale: 3/16" = 1'

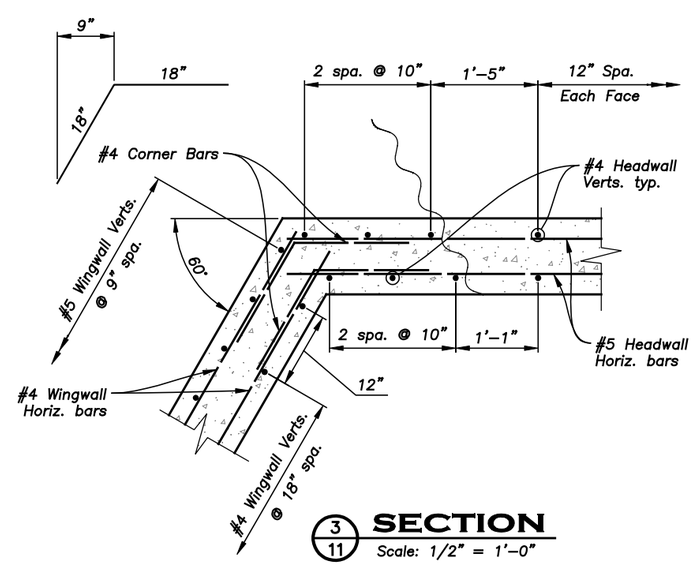

3/11 **SECTION**
Scale: 1/2" = 1'–0"

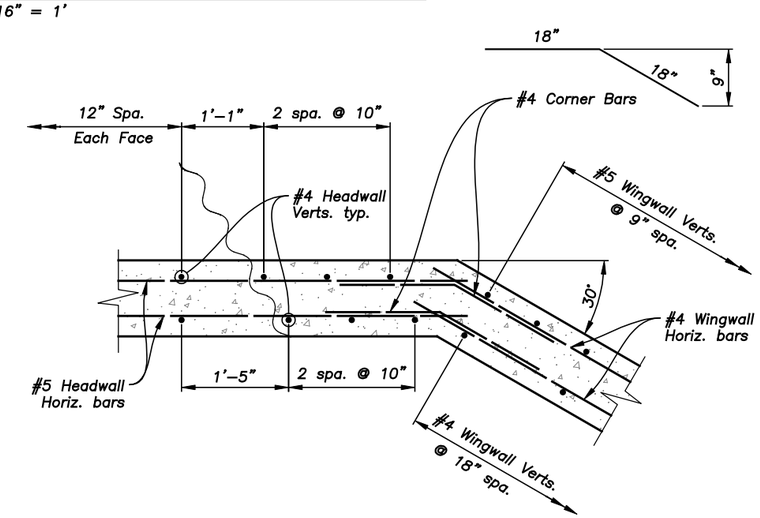

2/11 **SECTION**
Scale: 1/2" = 1'–0"

CORNER DETAILS

FOREST SERVICE
U S
DEPARTMENT OF AGRICULTURE
REGION ONE

BY	DATE	REVISION DESCRIPTION

DESIGN CT PROJ. NO. 5380.05
DRAWN CT DATE APR 08
CHECKED MJ SURVEYED DJ&A

DJ&A, P.C.
CONSULTING ENGINEERS & LAND SURVEYORS
3203 Russell Street, Missoula, Montana 59801-8591
Phone 406/721-4320 Fax 406/549-6371

USFS - CLEARWATER N.F.
JIM BROWN CREEK
CULVERT REPLACEMENT

HEADWALL & WINGWALL DETAILS

SHEET 11 OF 11

REGION ONE

JIM BROWN CREEK CULVERT
HIGHWAY 55 (RD. #100)
ROADWAY CROSS SECTIONS

PREPARED BY : DJ&A, P.C.
CONSULTING ENGINEERS & LAND SURVEYORS
3203 Russell Street, Missoula, Montana 59801-5901
Phone 406/721-4330 Fax 406/549-8371

2+20

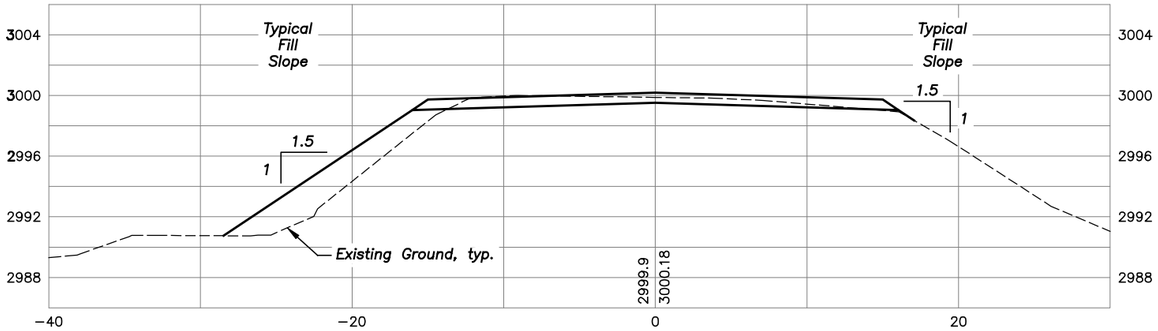

2+00

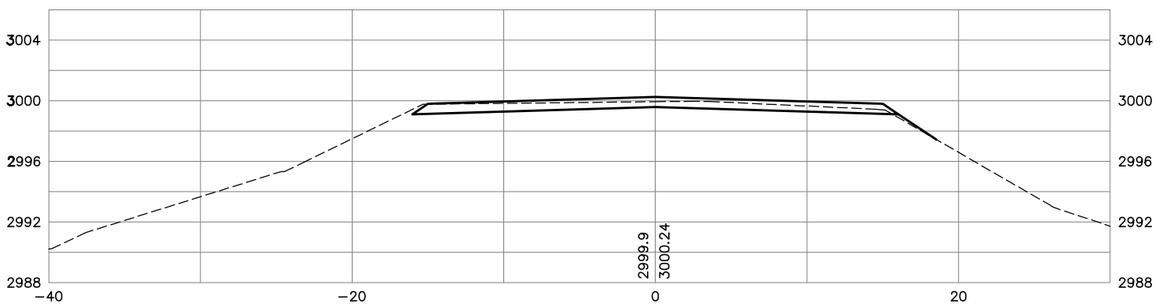

1+80

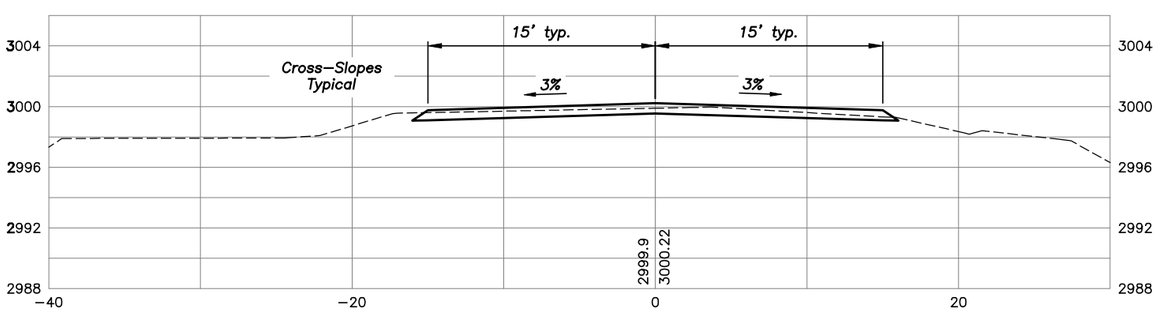

1+60

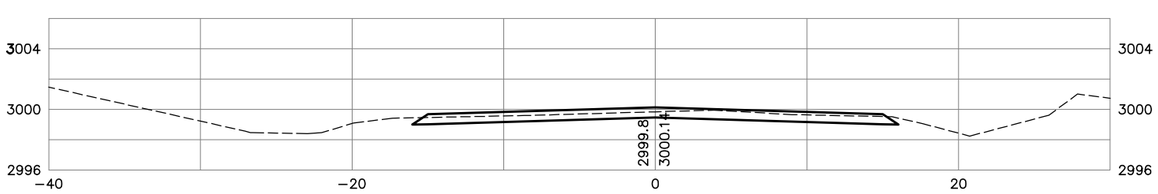

2+50

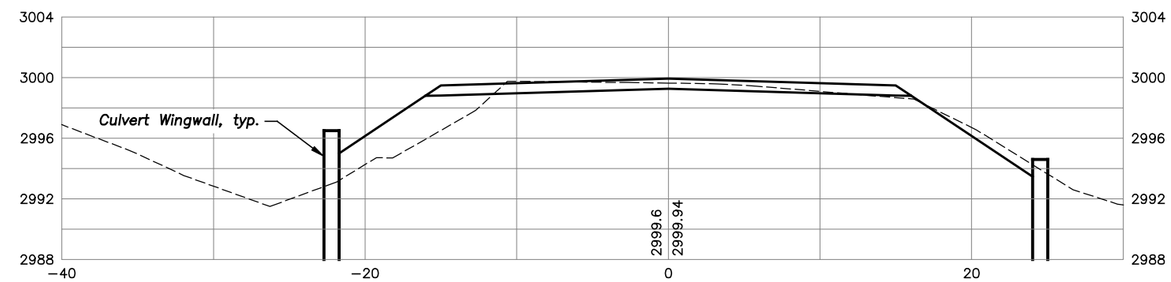

2+40

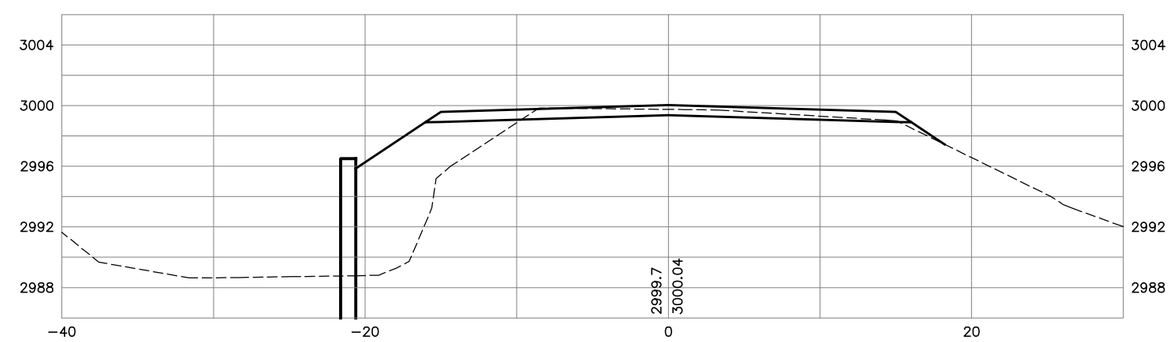

2+30

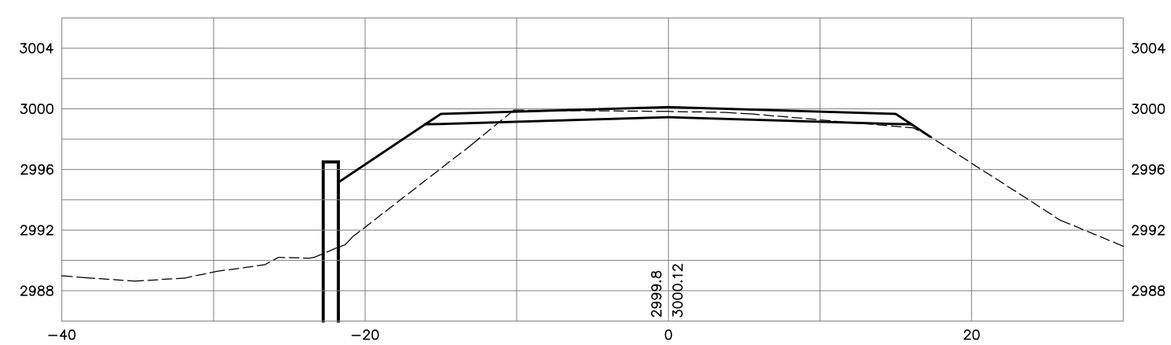

JIM BROWN CREEK CULVERT
HIGHWAY 55 (RD. #100)
ROADWAY CROSS SECTIONS

REGION ONE

PREPARED BY : DJ&A, P.C.
CONSULTING ENGINEERS & LAND SURVEYORS
3203 Russell Street, Missoula, Montana 59801-5901
Phone 406/721-4330 Fax 406/549-8571

2+80

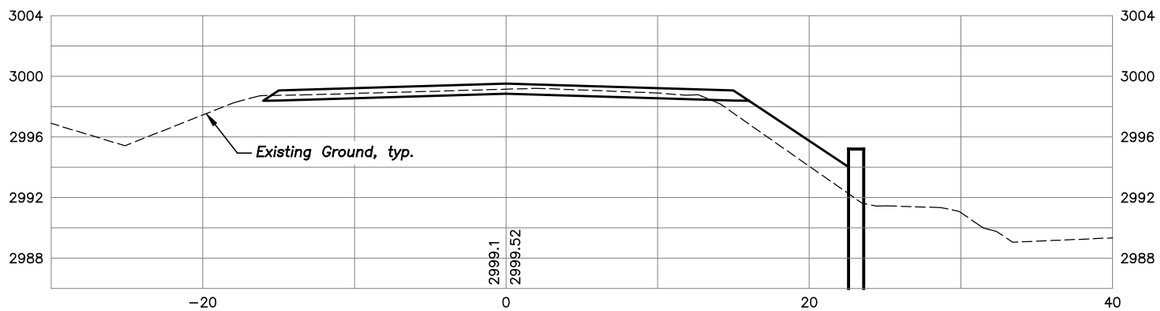

2+70

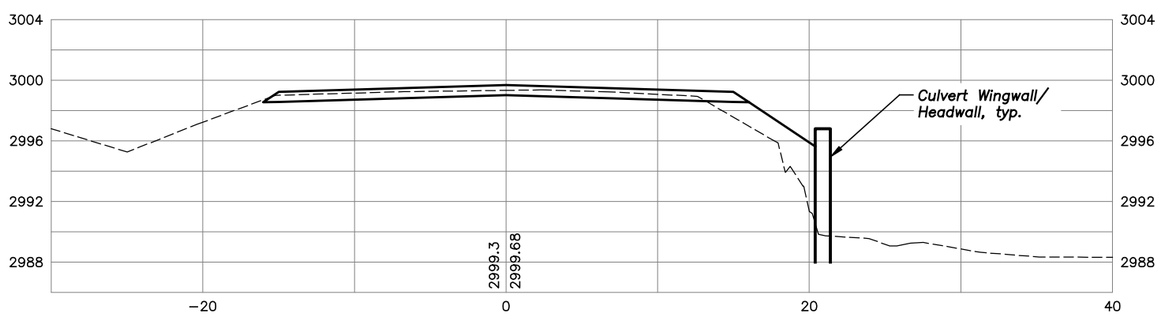

2+60

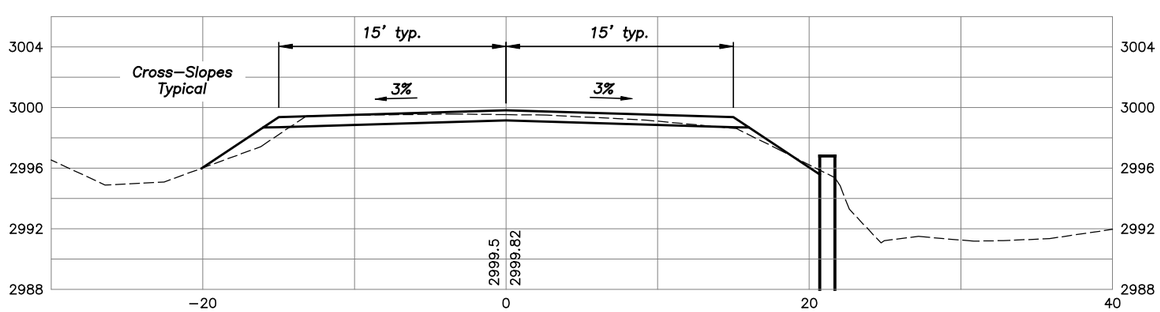

2+52.23

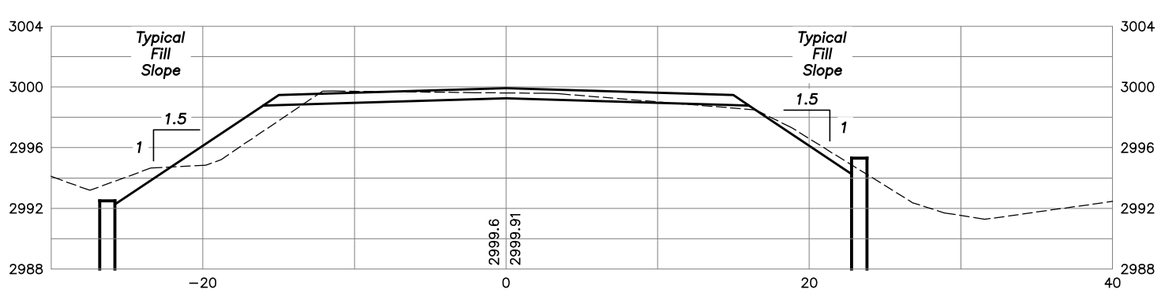

3+60

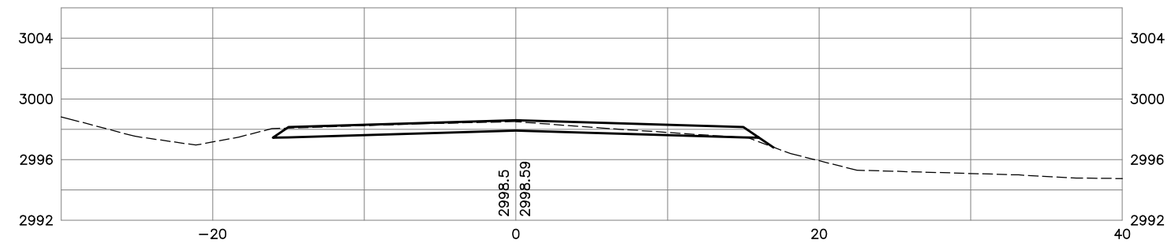

3+40

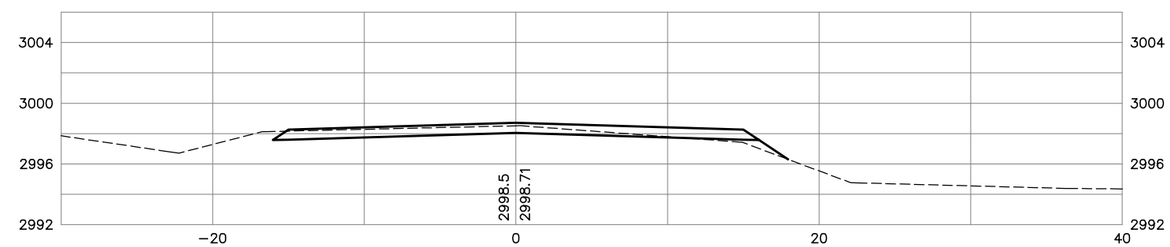

3+20

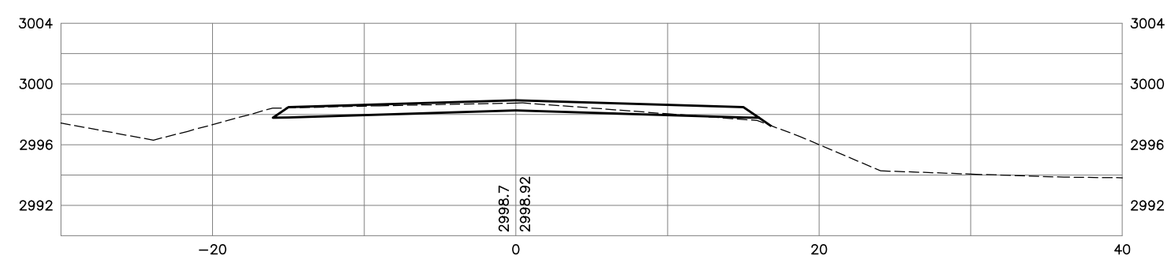
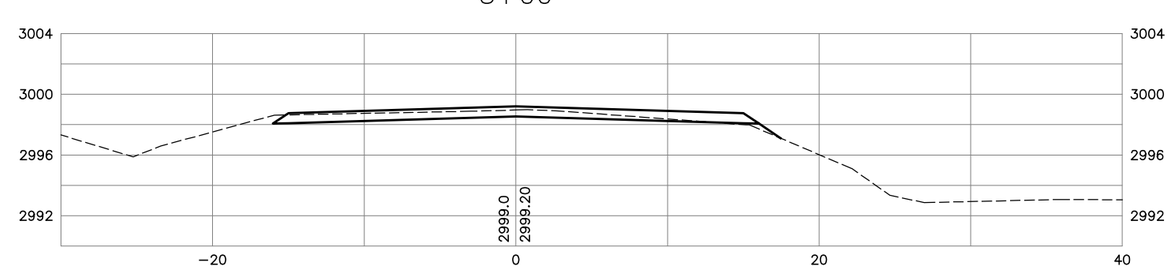
3+00