USDA FORESTRY SCIENCES LAB 1970 WING

INTERIOR PAINT AND COLOR SCHEDULE

STANDARD COLOR SCHEME

SPACE NAME AND NO.	COLOR SCHEME S.P. G-50-1H	REMARKS
G-9 RECEIVING	8	
G-10 STORAGE	8	
G-12 MECHANICAL EQUIP	8	
G-11 BOILER ROOM	8	
G-22 ELEVATOR MACHINE RM.	8	

SPECIAL COLOR SCHEDULE

SPACE NAME AND NO	COLOR NO.
LABORATORIES - G-8, G-13, G-14, G-15, G-16, G-17	37778
LABORATORIES - 104, 110, 111, 112, 113, 114, 115	37778
CORRIDORS G-20, G-21 ENTRY G-18	37778
STAIR NO 1	37778

NOTE : UNLESS MODIFIED BY SPECIAL NOTE, FOLLOW GENERAL COLOR INSTRUCTIONS, S.D. G-50-1H WHERE THEY APPLY TO THE ABOVE SPACES.

NOTES:

1. ALL CONCRETE FLOORS UNPAINTED
2. ALL INTERIOR FERROUS METAL TO BE PAINTED COLOR 30277
3. ALL INTERIOR WOOD TRIM AND DOORS TO HAVE NATURAL FINISH (STAIN TO MATCH WOOD PANELING)
4. ALL ACOUSTIC TILE TO HAVE FACTORY WHITE FINISH
5. ALL INTERIOR WOOD PANELING TO HAVE NATURAL FACTORY FINISH.
6. ELEVATOR DOORS & FRAME 30277
7. REVEALS - BLACK.

EXTERIOR PAINT AND COLOR SCHEDULE

ITEM	COLOR NO.
DOORS G/2 G/3 1/2	25109
ALL FERROUS METAL	20045
WINDOW FRAME, SASH & TRIM	20045
DOOR FRAMES & TRIM	20045
DOORS G/1 & 1/1	NATURAL FINISH
ALL OTHER WOOD TRIM (DRIP CAP, FASCIA, "L" SHAPED VERT. TRIM ETC.	20045
WOOD LAMINATE BEAMS	20045
WOOD DECK (NATURAL FINISH)	MATCH INTERIOR STAIN
NON FERROUS METAL	20045

EXTERIOR AND SPECIAL DOOR SCHEDULE

SYMBOL	TYPE	MATERIAL	SIZE	DETAILS HEAD	DETAILS JAMB	DETAILS SILL	REMARKS
G-1	A	WOOD	2-2'-8" x 7'-9"	1	2, 3	S.D. 6-15-7E	
G-2	B	WOOD	2'-8" x 7'-9"	1	3	S.D. 6-15-7E	SIMILIAR TO TYPE 'B'
G-3	B	WOOD	2-2'-8" x 7'-9"	1	3	S.D. 6-15-7E	
1-1	A	WOOD	2-2'-8" x 7'-9"	1	2, 3	S.D. 6-15-7E	TYPE 'A' DOOR REVERSED
1-2	B	WOOD	2-2'-8" x 7'-9"	1	3	S.D. 6-15-7E	

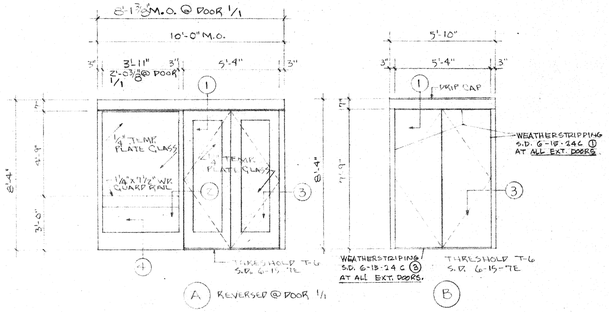

DOOR TYPES
SCALE: 1/4" = 1'-0"

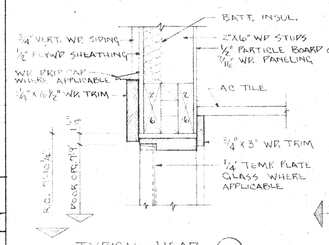

TYPICAL HEAD (1)

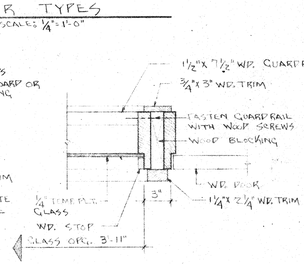

TYPICAL JAMB (2)

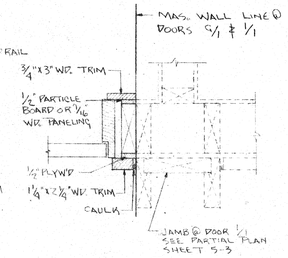

TYPICAL JAMB (3)

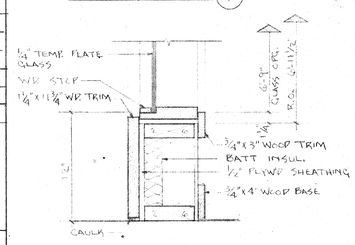

TYPICAL SILL (4)

DOOR DETAILS
SCALE: 1 1/2" = 1'-0"

EXTERIOR & SPECIAL DOOR ELEVATIONS & DETAILS (1 / S-1 | S-2)

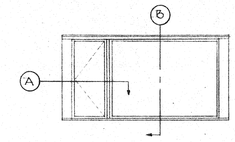

ELEVATION
SCALE: 1/4" = 1'-0"

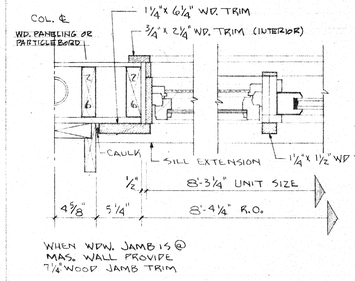

JAMB & MULLION DETAIL 'A'
SCALE: 1 1/2" = 1'-0"

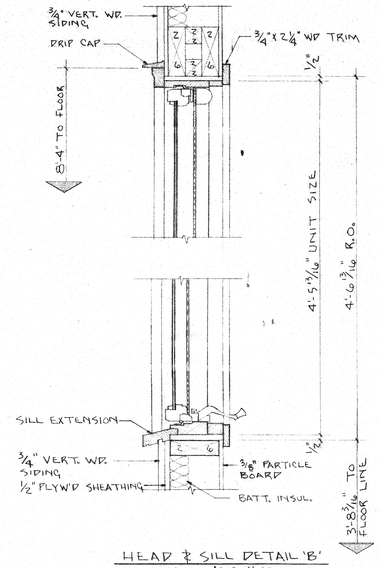

HEAD & SILL DETAIL 'B'
SCALE: 1 1/2" = 1'-0"

WINDOW TYPE (1)

ELEVATION
SCALE: 1/4" = 1'-0"

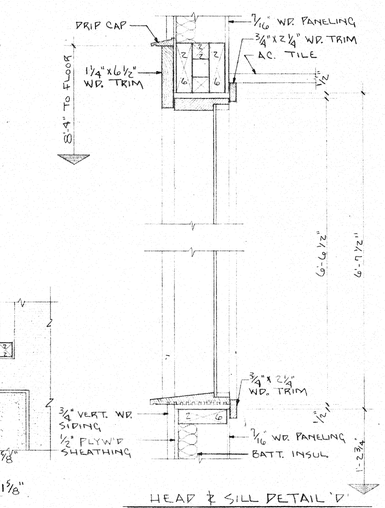

HEAD & SILL DETAIL 'D'
SCALE: 1 1/2" = 1'-0"

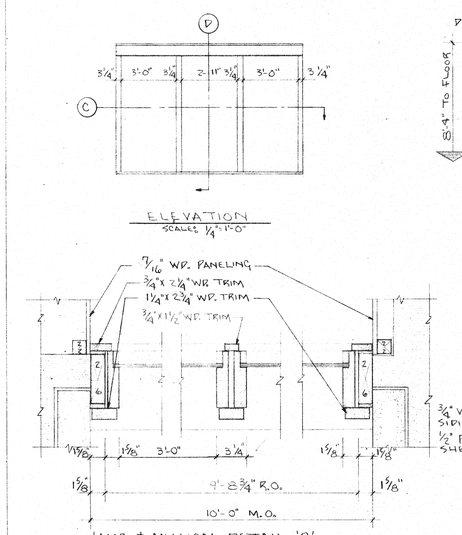

JAMB & MULLION DETAIL 'C'
SCALES: 1 1/2" = 1'-0"

WINDOW TYPE (2)

EXTERIOR WINDOW ELEVATIONS & DETAILS (3 / S-1 | S-2)

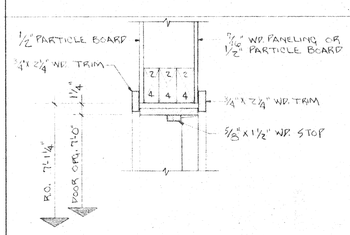

HEAD DETAIL
JAMB SIMILIAR
SCALES: 1 1/2" = 1'-0"

INTERIOR DOOR DETAIL (2 / S-1 | S-2)

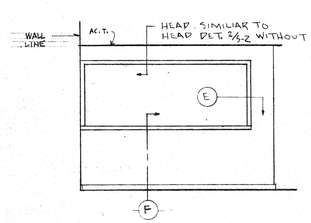

ELEVATION (FROM RM 117)
SCALE: 1/4" = 1'-0"

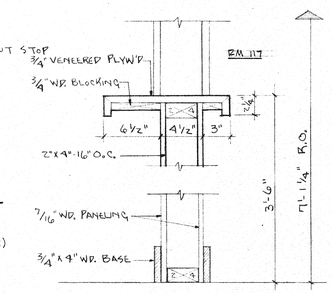

SECTION
SCALES: 1 1/2" = 1'-0"

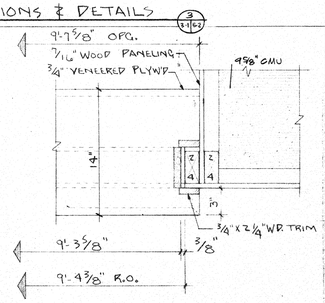

JAMB DETAIL 'E'
SCALES: 1 1/2" = 1'-0"

COUNTER DETAIL RM 101 (4 / S-1 | S-2)

HACKNER SCHROEDER ROSLANSKY ASSOC., INC.
ARCHITECTS PLANNERS ENGINEERS
LA CROSSE WISCONSIN

APPROVED	ARCHITECTURAL	STRUCTURAL	MECHANICAL ELECTRICAL

GENERAL SERVICES ADMINISTRATION
PUBLIC BUILDING SERVICE • WASHINGTON, D.C.

PROJECT	ADDITION TO INST. OF FOREST GENETICS,
LOCATION	RHINELANDER, WISCONSIN
STREET	STAR ROUTE # 2
PROJ. NO.	47096
CONTR. NO.	
DATE	5-22-69
DRAWING TITLE	SCHEDULES DOOR DETAILS WINDOW DETAILS
	ARCHITECTURAL
DRAWING NO.	5-2