Exhibit 14

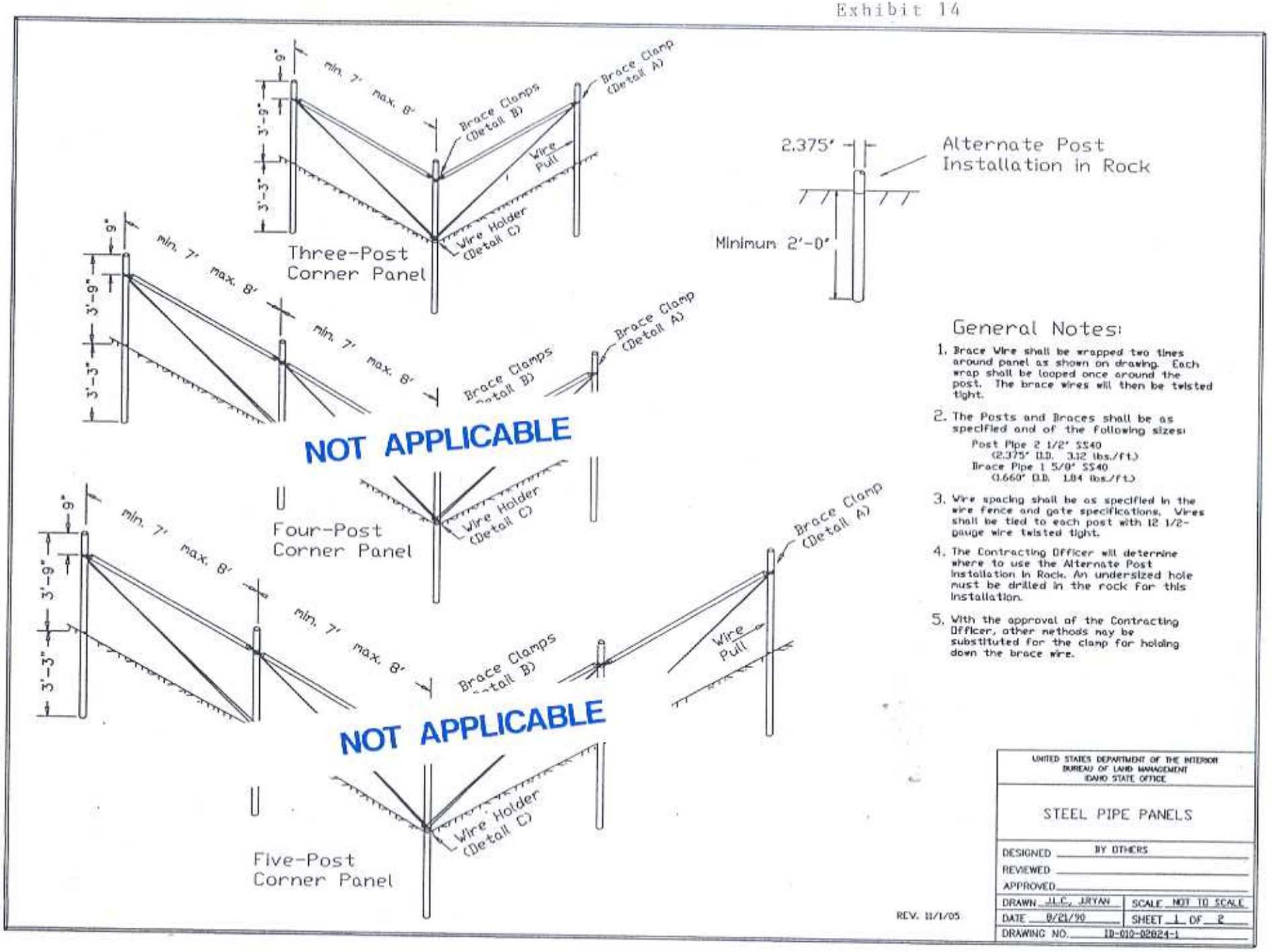
Three-Post Corner Panel
min. 7' max. 8'
Brace Clamps (Detail B)
Brace Clamp (Detail A)
Wire Pull
Wire Holder (Detail C)
9"
3'-9"
3'-3"
Four-Post Corner Panel
NOT APPLICABLE
Five-Post Corner Panel
NOT APPLICABLE
2.375'
Alternate Post Installation in Rock
Minimum 2'-0"
General Notes:
1. Brace Wire shall be wrapped two times around panel as shown on drawing. Each wrap shall be looped once around the post. The brace wires will then be twisted tight.
2. The Posts and Braces shall be as specified and of the following sizes:
Post Pipe 2 1/2" SS40 (2.375" O.D. 3.12 lbs./ft.)
Brace Pipe 1 5/8" SS40 (1.660" O.D. 1.84 lbs./ft.)
3. Wire spacing shall be as specified in the wire fence and gate specifications. Wires shall be tied to each post with 12 1/2-gauge wire twisted tight.
4. The Contracting Officer will determine where to use the Alternate Post Installation in Rock. An undersized hole must be drilled in the rock for this installation.
5. With the approval of the Contracting Officer, other methods may be substituted for the clamp for holding down the brace wire.
REV. 11/1/05
UNITED STATES DEPARTMENT OF THE INTERIOR
BUREAU OF LAND MANAGEMENT
IDAHO STATE OFFICE
STEEL PIPE PANELS
DESIGNED BY OTHERS
REVIEWED
APPROVED
DRAWN J.L.C., J.RYAN
SCALE NOT TO SCALE
DATE 8/21/90
SHEET 1 OF 2
DRAWING NO. ID-010-02824-1

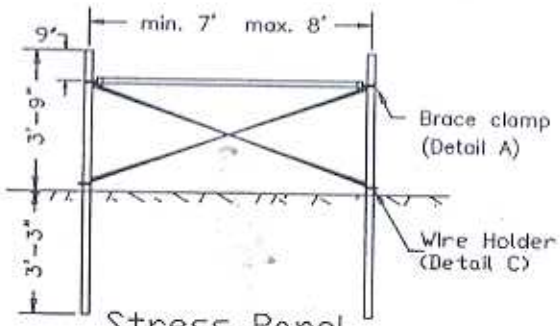

Stress Panel

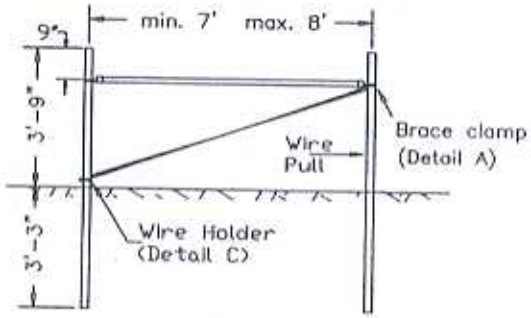

Two-Post End Panel

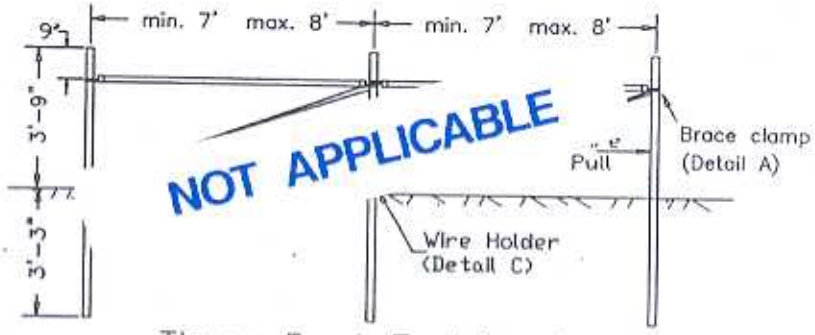

NOT APPLICABLE

Three-Post End Panel

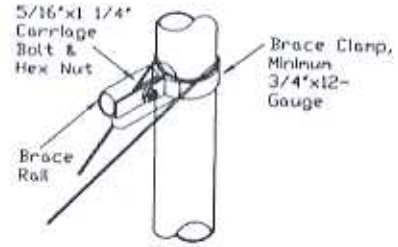

Detail A

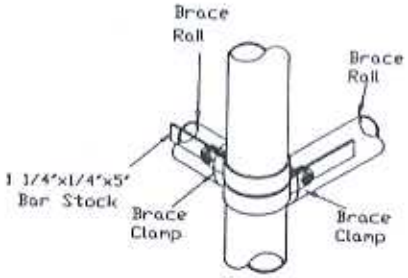

Detail B

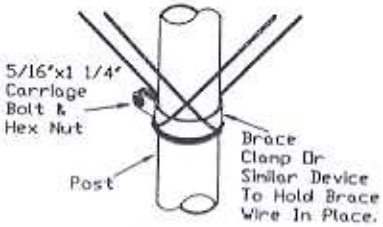

Detail C

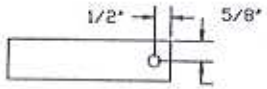

1 1/4"x1/4"x5"
Bar Stock
Brace Rail Connector Detail

Detail D

General Notes:

1. Brace Wire shall be wrapped two times around panel as shown on drawing. Each wrap shall be looped once around the post. The brace wires will then be twisted tight.
2. The Posts and Braces shall be as specified and of the following sizes:
   Post Pipe 2 1/2" SS40
   (2.375" O.D. 3.12 lbs./ft.)
   Brace Pipe 1 5/8" SS40
   (1.660" O.D. 1.84 lbs./ft.)
3. Wire spacing shall be as specified in the wire fence and gate specifications. Wires shall be tied to each post with 12 1/2-gauge wire twisted tight.
4. The Contracting Officer will determine where to use the Alternate Post Installation in Rock. An undersized hole must be drilled in the rock for this installation.
5. With the approval of the Contracting Officer, other methods may be substituted for the clamp for holding down the brace wire.

REV. 11/1/03

UNITED STATES DEPARTMENT OF THE INTERIOR
BUREAU OF LAND MANAGEMENT
IDAHO STATE OFFICE

STEEL PIPE PANELS

DESIGNED BY OTHERS	
REVIEWED	
APPROVED	
DRAWN J.L.C., JRYAN	SCALE NOT TO SCALE
DATE 8/21/90	SHEET 2 OF 2
DRAWING NO. ID-010-02824-2	