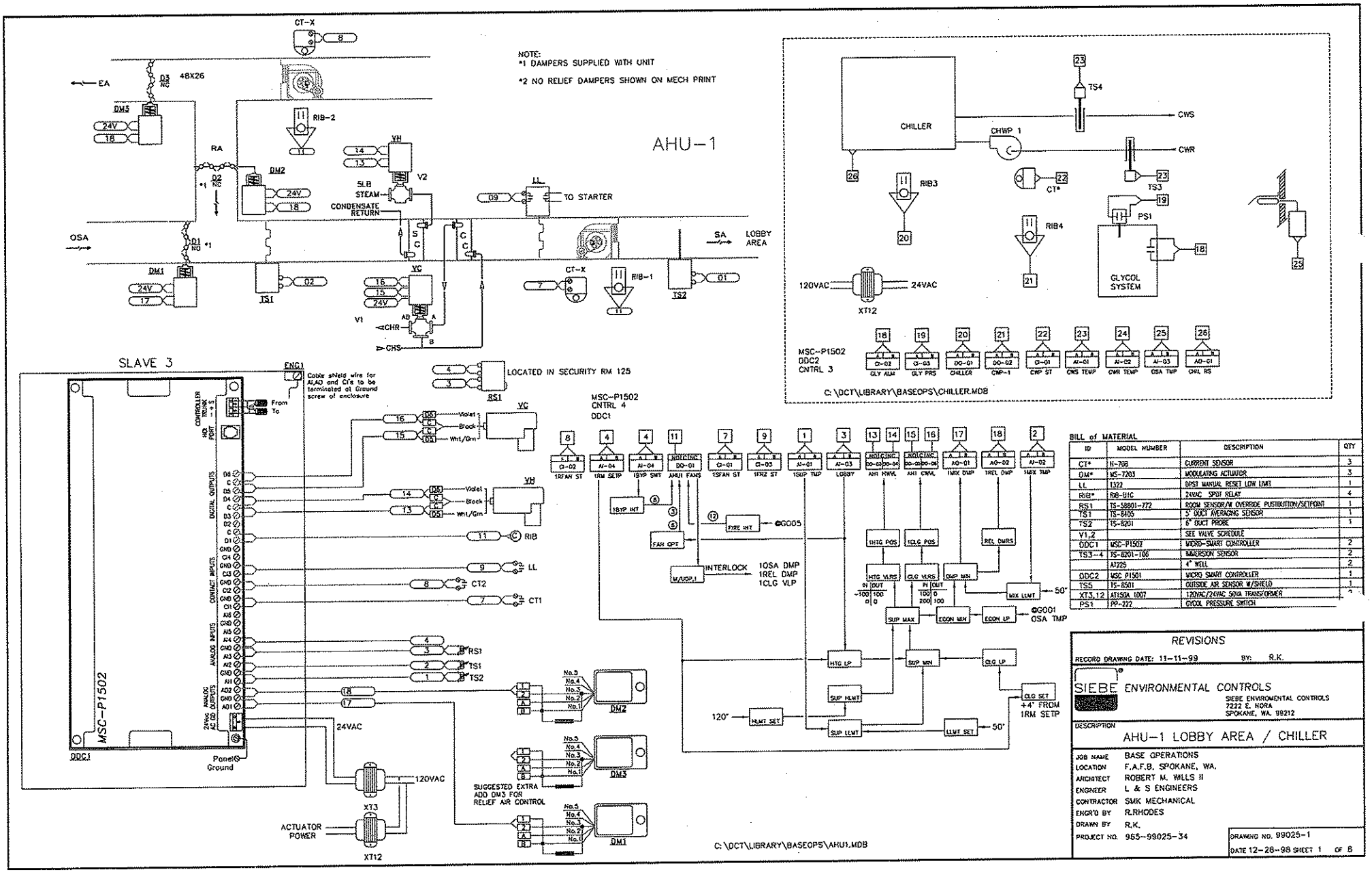

BILL of MATERIAL

ID	MODEL NUMBER	DESCRIPTION	QTY
CT*	H-708	CURRENT SENSOR	3
DM*	MS-7203	MODULATING ACTUATOR	3
LL	1322	DPST MANUAL RESET LOW LIMIT	1
RIB*	RIB-U1C	24VAC SPDT RELAY	4
RS1	TS-58801-772	ROOM SENSOR/W OVERRIDE PUSHBUTTON/SETPOINT	1
TS1	TS-8405	3' DUCT AVERAGING SENSOR	1
TS2	TS-8201	6" DUCT PROBE	1
V1,2		SEE VALVE SCHEDULE	
DDC1	MSC-P1502	MICRO-SMART CONTROLLER	2
TS3-4	TS-8201-106	IMMERSION SENSOR	2
	AT225	4" WELL	2
DDC2	MSC P1501	MICRO SMART CONTROLLER	1
TS5	TS-8501	OUTSIDE AIR SENSOR W/SHIELD	1
XT3,12	AT15GA 1007	120VAC/24VAC 50VA TRANSFORMER	1
PS1	PP-222	GYCOL PRESSURE SWITCH	1

REVISIONS

RECORD DRAWING DATE: 11-11-99 BY: R.K.

SIEBE ENVIRONMENTAL CONTROLS

SIEBE ENVIRONMENTAL CONTROLS
7222 E. NORA
SPOKANE, WA. 99212

DESCRIPTION

AHU-1 LOBBY AREA / CHILLER

JOB NAME	BASE OPERATIONS
LOCATION	F.A.F.B. SPOKANE, WA.
ARCHITECT	ROBERT M. WILLS II
ENGINEER	L & S ENGINEERS
CONTRACTOR	SMK MECHANICAL
ENGR'D BY	R.RHODES
DRAWN BY	R.K.
PROJECT NO.	965-99025-34

DRAWING NO. 99025-1

DATE 12-28-98 SHEET 1 OF 8

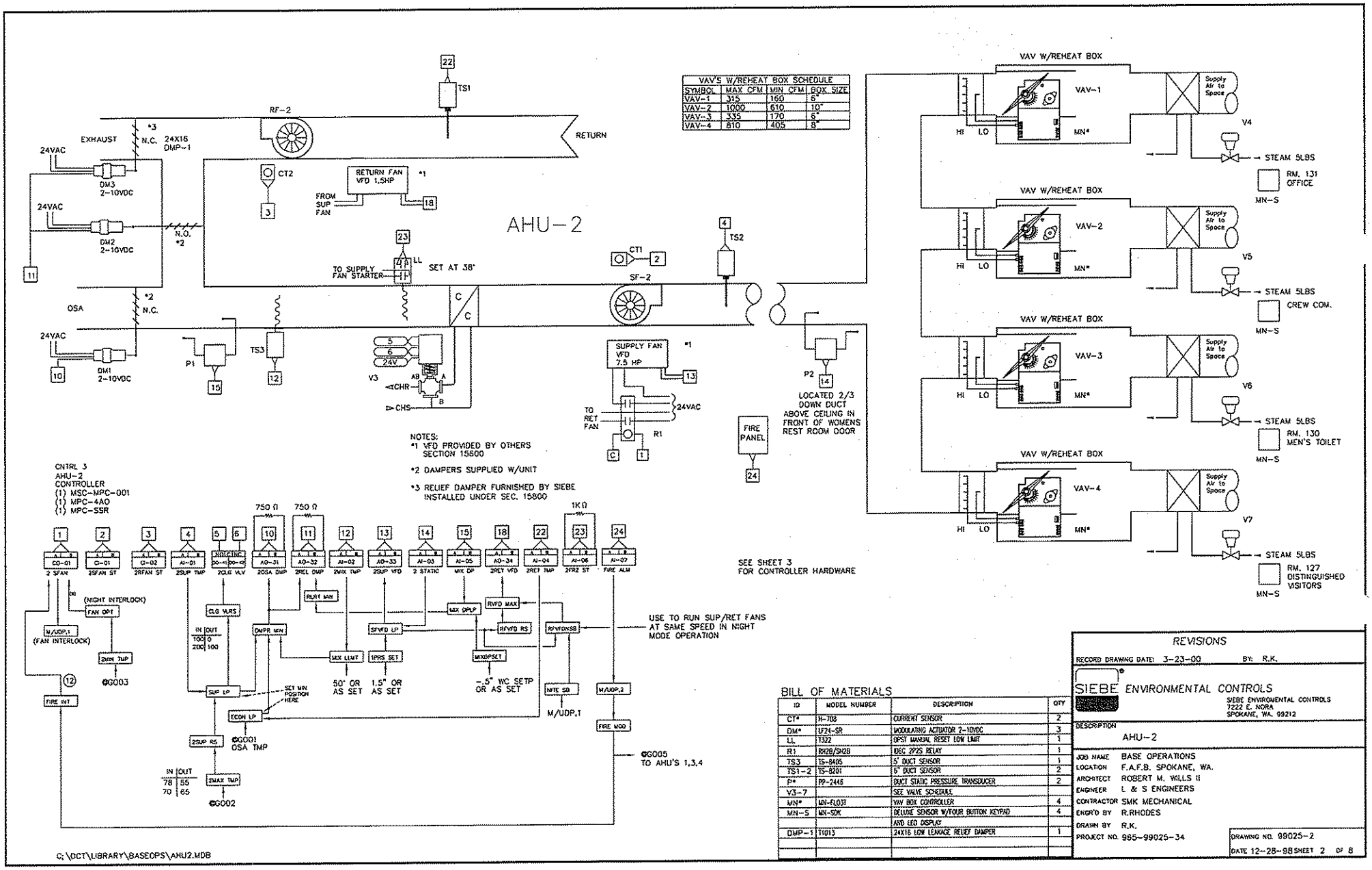

VAV'S W/REHEAT BOX SCHEDULE			
SYMBOL	MAX CFM	MIN CFM	BOX SIZE
VAV-1	315	160	6"
VAV-2	1000	610	10"
VAV-3	335	170	6"
VAV-4	810	405	8"

BILL OF MATERIALS

ID	MODEL NUMBER	DESCRIPTION	QTY
CT*	H-708	CURRENT SENSOR	2
DM*	LF24-SR	MODULATING ACTUATOR 2-10VDC	3
LL	1322	DPST MANUAL RESET LOW LIMIT	1
R1	R10B/SH2B	DEC 2P2S RELAY	1
TS3	TS-8405	5" DUCT SENSOR	1
TS1-2	TS-8201	6" DUCT SENSOR	2
P*	PP-2445	DUCT STATIC PRESSURE TRANSDUCER	2
V3-7		SEE VALVE SCHEDULE	
MN*	MN-FL03T	VAV BOX CONTROLLER	4
MN-S	MN-SDK	DELUXE SENSOR W/FOUR BUTTON KEYPAD AND LED DISPLAY	4
DMP-1	T1013	24X16 LOW LEAKAGE RELIEF DAMPER	1

REVISIONS

RECORD DRAWING DATE: 3-23-00 BY: R.K.

SIEBE ENVIRONMENTAL CONTROLS

SIEBE ENVIROMENTAL CONTROLS
7222 E. NORA
SPOKANE, WA. 99212

DESCRIPTION
AHU-2

JOB NAME BASE OPERATIONS
LOCATION F.A.F.B. SPOKANE, WA.
ARCHITECT ROBERT M. WILLS II
ENGINEER L & S ENGINEERS
CONTRACTOR SMK MECHANICAL
ENGR'D BY R.RHODES
DRAWN BY R.K.
PROJECT NO. 965-99025-34

DRAWING NO. 99025-2
DATE 12-28-98 SHEET 2 OF 8

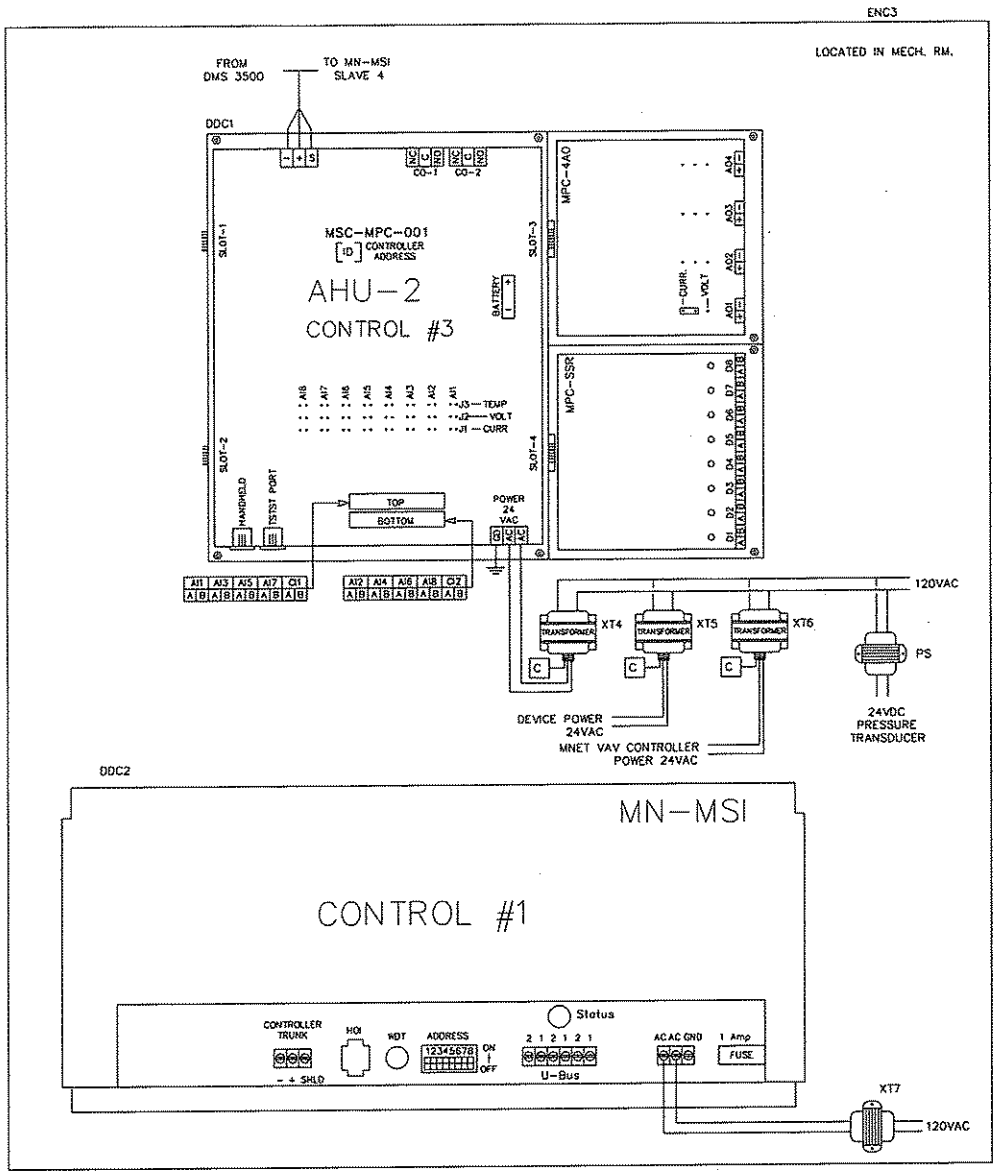

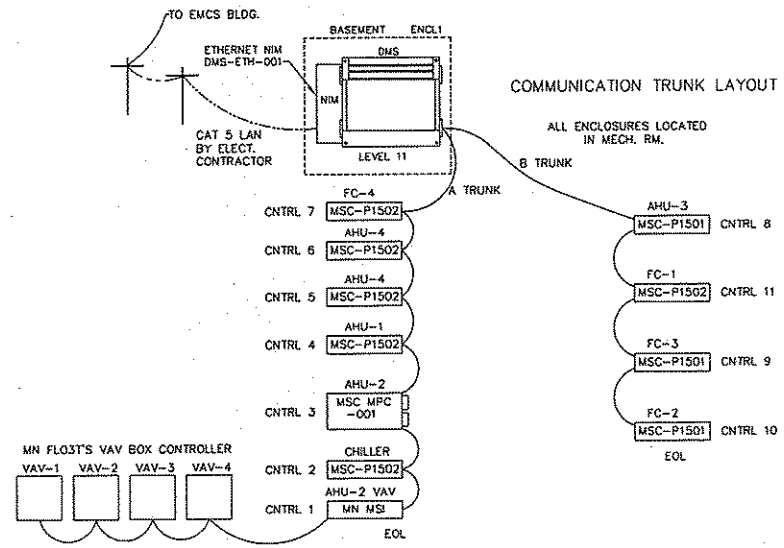

BILL OF MATERIALS

ID	MODEL NUMBER	DESCRIPTION	QTY
XT4-7	AT150A 1007	120/24V 50VA TRANSFORMER	4
DDC1	MSC-MPC-001	MULTI-PURPOSE CONTROLLER	1
DDC1	MPC-4AO	ANALOG OUTPUT EXPANSION BOARD	1
DDC1	MPC-SSR	SOLID STATE RELAY EXPANSION BOARD	1
DDC2	MN-MSI	ENHANCED MICROSMART CONTROLLER	1
DMS	DMS-3500	DIGITAL MANAGEMENT SYSTEM CONTROLLER	1
ENCL1	ENCL-201-TUB	DMS 3500 ENCLOSURE	1
ENCL1	ENCL-DOOR-PLA	ENCLOSURE DOOR	1
ENCL2	LOCAL PURCHASE	12X16X4 SCREW COVER ENCLOSURE	6
ENCL3	ENC-002	DOUBLE ENCLOSURE	1
NIM	DMS-ETH-001	ETHERNET NETWORK INTERFACE MODULE	
PS	PS200-1-A-1-N	(MAWAC) 120VAC/24VDC POWER SUPPLY	

REVISIONS

RECORD DRAWING DATE: 3-23-00 BY: R.K.

SIEBE ENVIRONMENTAL CONTROLS

SIEBE ENVIRONMENTAL CONTROLS
7222 E. NORA AVE
SPOKANE, WA. 99212

DESCRIPTION
SLAVE 3-4 PANEL LAYOUT/SYSTEM TRUNK LAYOUT

JOB NAME	BASE OPERATIONS
LOCATION	F.A.F.B. SPOKANE, WA.
ARCHITECT	ROBERT M. WALLS II
ENGINEER	L & S ENGINEERS
CONTRACTOR	SMK MECHANICAL
ENGR'D BY	R.RHODES
DRAWN BY	R.K.
PROJECT NO.	965-99025-34

DRAWING NO. 99025-3
DATE 12-28-98 SHEET 3 OF 8

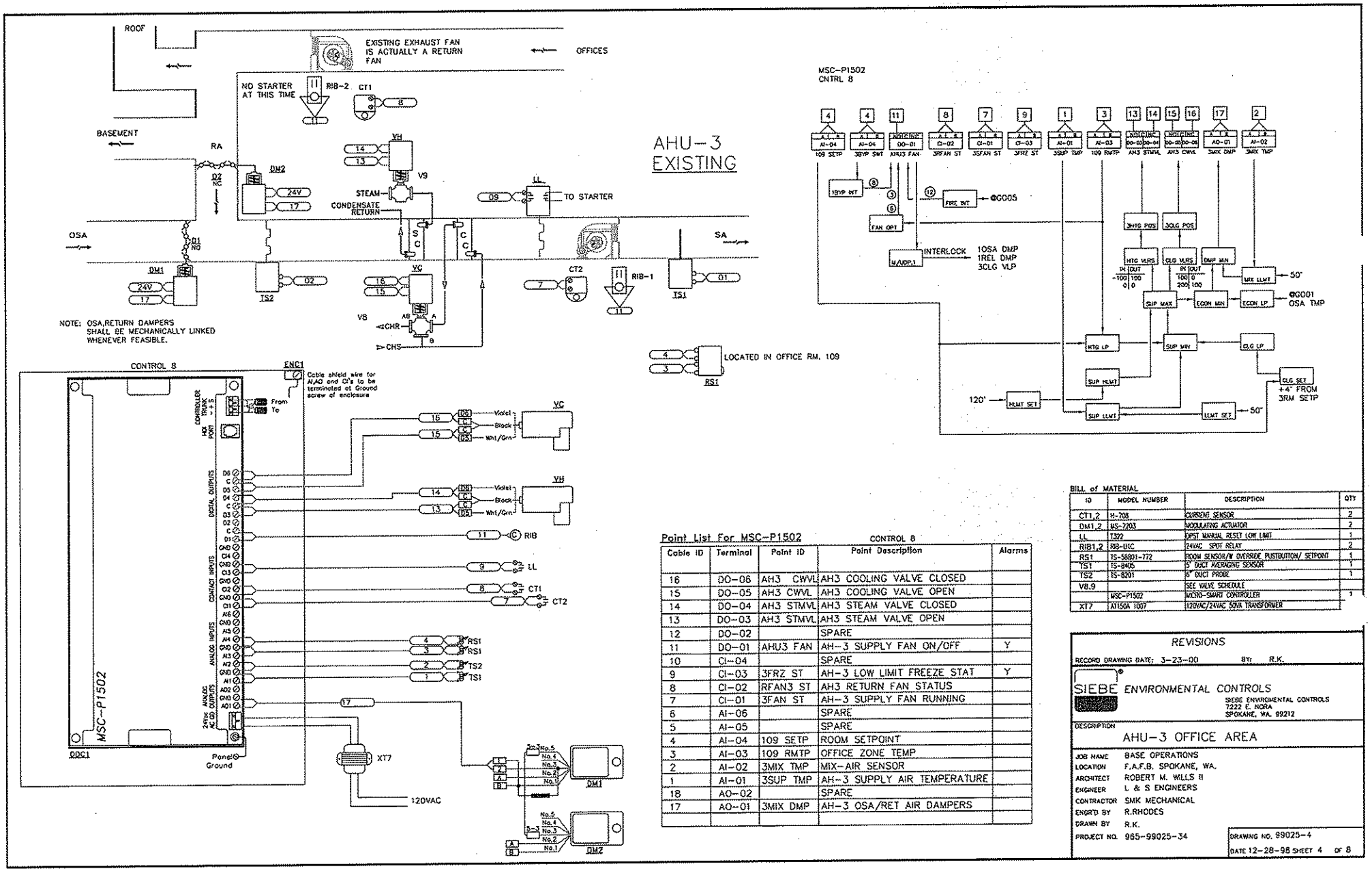

Point List For MSC-P1502 CONTROL 8

Cable ID	Terminal	Point ID	Point Description	Alarms
16	DO-06	AH3 CWVL	AH3 COOLING VALVE CLOSED	
15	DO-05	AH3 CWVL	AH3 COOLING VALVE OPEN	
14	DO-04	AH3 STMVL	AH3 STEAM VALVE CLOSED	
13	DO-03	AH3 STMVL	AH3 STEAM VALVE OPEN	
12	DO-02		SPARE	
11	DO-01	AHU3 FAN	AH-3 SUPPLY FAN ON/OFF	Y
10	CI-04		SPARE	
9	CI-03	3FRZ ST	AH-3 LOW LIMIT FREEZE STAT	Y
8	CI-02	RFAN3 ST	AH3 RETURN FAN STATUS	
7	CI-01	3FAN ST	AH-3 SUPPLY FAN RUNNING	
6	AI-06		SPARE	
5	AI-05		SPARE	
4	AI-04	109 SETP	ROOM SETPOINT	
3	AI-03	109 RMTP	OFFICE ZONE TEMP	
2	AI-02	3MIX TMP	MIX-AIR SENSOR	
1	AI-01	3SUP TMP	AH-3 SUPPLY AIR TEMPERATURE	
18	AO-02		SPARE	
17	AO-01	3MIX DMP	AH-3 OSA/RET AIR DAMPERS	

BILL of MATERIAL

ID	MODEL NUMBER	DESCRIPTION	QTY
CT1,2	H-705	CURRENT SENSOR	2
DM1,2	MS-7203	MODULATING ACTUATOR	2
LL	T322	SPST MANUAL RESET LOW LIMIT	1
RIB1,2	RB-11C	24VAC SPDT RELAY	2
RS1	TS-58801-772	ROOM SENSOR/W OVERRIDE PUSHBUTTON/ SETPOINT	1
TS1	TS-8405	5" DUCT AVERAGING SENSOR	1
TS2	TS-8201	6" DUCT PROBE	1
V8,9		SEE VALVE SCHEDULE	
	MSC-P1502	MICRO-SMART CONTROLLER	1
XT7	AT150A 1007	120VAC/24VAC 50VA TRANSFORMER	

REVISIONS

RECORD DRAWING DATE: 3-23-00 BY: R.K.

SIEBE ENVIRONMENTAL CONTROLS

SIEBE ENVIRONMENTAL CONTROLS
7222 E. NORA
SPOKANE, WA. 99212

DESCRIPTION

AHU-3 OFFICE AREA

JOB NAME	BASE OPERATIONS
LOCATION	F.A.F.B. SPOKANE, WA.
ARCHITECT	ROBERT M. WILLS II
ENGINEER	L & S ENGINEERS
CONTRACTOR	SMK MECHANICAL
ENGR'D BY	R.RHODES
DRAWN BY	R.K.
PROJECT NO.	965-99025-34

DRAWING NO. 99025-4

DATE 12-28-98 SHEET 4 OF 8

Point List For MSC-P1502			SLAVE 1
Cable ID	Terminal	Point ID	Point Description
32	AI-04	SZONESET	SOUTH ZONE SETPOINT
33	AI-03	NZONESET	NORTH ZONE SETPOINT
34	AI-02	SOUTH 208	ROOM TEMP SOUTH ZONE
35	AI-01	NORTH 205	ROOM TEMP NORTH ZONE
36	AO-02	SZONEDMP	ZONE DAMPER SOUTH ZONE
37	AO-01	NZONEDMP	ZONE DAMPER NORTH ZONE

Point List For MSC-P1502			CONTROL 5
Cable ID	Terminal	Point ID	Point Description
16	DO-06	AH3 CDVL	AH3 COLD DECK VALVE CLOSED
15	DO-05	AH3 CDVL	AH3 COLD DECK VALVE OPEN
14	DO-04	AH3 HDVL	AH3 HOT DECK VALVE CLOSED
13	DO-03	AH3 HDVL	AH3 HOT DECK VALVE OPEN
12	DO-02		SPARE
11	DO-01	AHU4FAN	SUPPLY/RETURN FAN START/STOP
10	CI-04	4SFANST	AH-4 SUPPLY FAN RUNNING
9	CI-03	4FRZ ALM	FREEZE STAT STATUS
4	AI-04	4RET TMP	RETURN AIR TEMP
3	AI-03	4MIX TMP	MIX-AIR TEMP
2	AI-02	AH4 CDTP	COLD DECK TEMP
1	AI-01	AH4 HDTP	HOT DECK TEMP
17	AO-02	4REL DMP	RELIEF DAMPER
18	AO-01	4MIX DMP	OSA/RETURN DAMPER

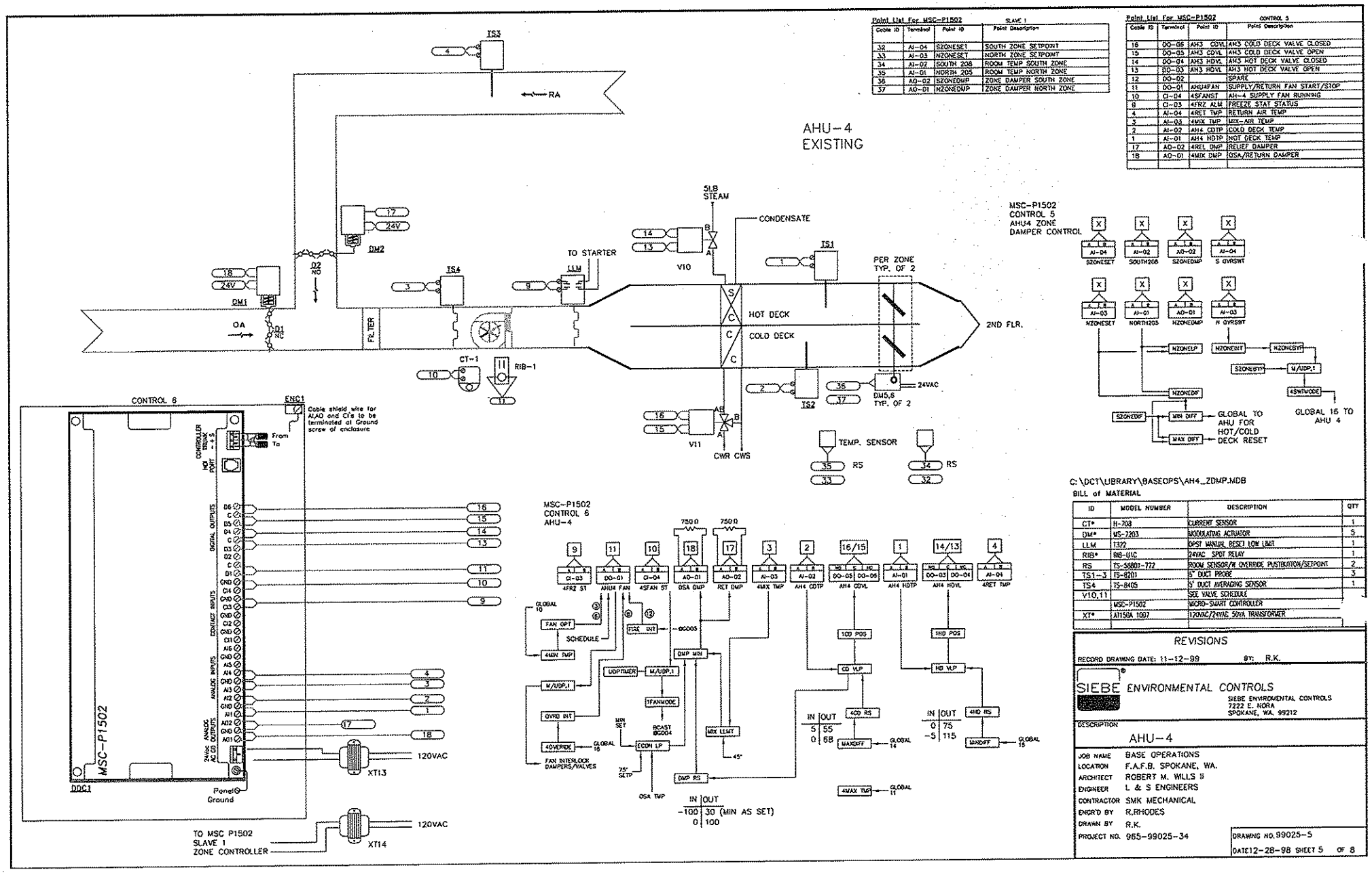

C:\DCT\LIBRARY\BASEOPS\AH4_ZDMP.MDB

BILL of MATERIAL

ID	MODEL NUMBER	DESCRIPTION	QTY
CT*	H-708	CURRENT SENSOR	1
DM*	MS-7203	MODULATING ACTUATOR	5
LLM	T372	DPST MANUAL RESET LOW LIMIT	1
RIB*	RIB-U1C	24VAC SPOT RELAY	1
RS	TS-S8801-772	ROOM SENSOR/W OVERRIDE PUSHBUTTON/SETPOINT	2
TS1--3	TS-8201	5" DUCT PROBE	3
TS4	TS-8405	5' DUCT AVERAGING SENSOR	1
V10,11		SEE VALVE SCHEDULE	
	MSC-P1502	MICRO-SMART CONTROLLER	
XT*	AT150A 1007	120VAC/24VAC 50VA TRANSFORMER	

REVISIONS

RECORD DRAWING DATE: 11-12-99 BY: R.K.

SIEBE ENVIRONMENTAL CONTROLS

SIEBE ENVIRONMENTAL CONTROLS
7222 E. NORA
SPOKANE, WA. 99212

DESCRIPTION: AHU-4

JOB NAME	BASE OPERATIONS
LOCATION	F.A.F.B. SPOKANE, WA.
ARCHITECT	ROBERT M. WILLS II
ENGINEER	L & S ENGINEERS
CONTRACTOR	SMK MECHANICAL
ENGR'D BY	R.RHODES
DRAWN BY	R.K.
PROJECT NO.	965-99025-34

DRAWING NO. 99025-5

DATE 12-28-98 SHEET 5 OF 8

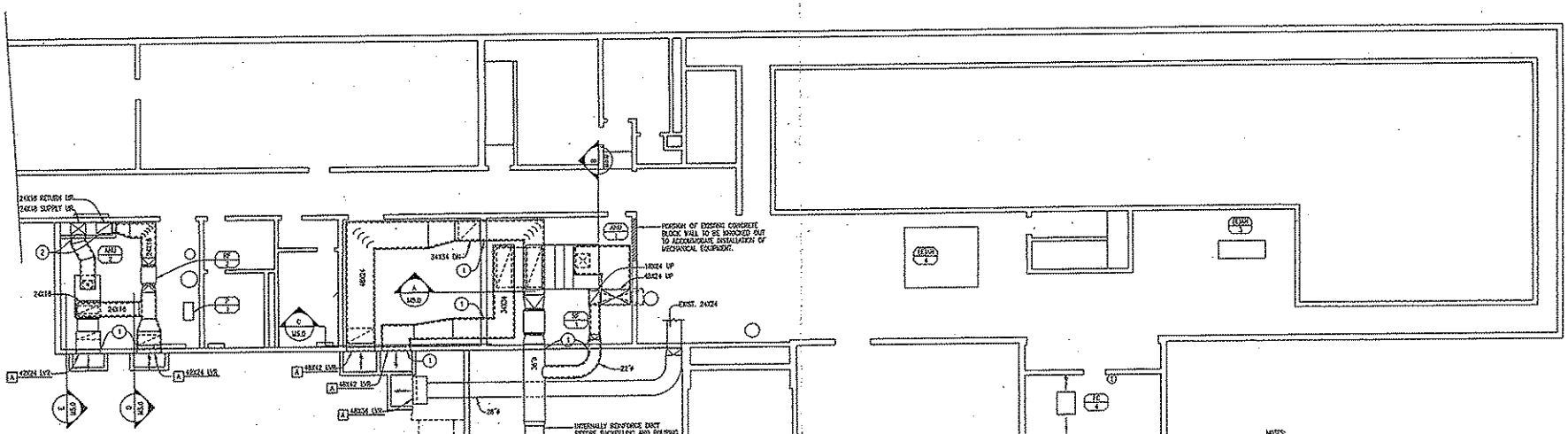

BASEMENT PLAN - MECHANICAL

SCALE: 1/8"=1'-0"

CAUTION: BEFORE THE SLAB IS POURED, HEAVY EQUIPMENT MUST NOT BE ALLOWED TO PASS OVER THE TRENCH OVER THE DUCT HAS BEEN INSTALLED AND BACK-FILLED, UNLESS APPROPRIATE BRIDGING IS PROVIDED.

NOTE: BEFORE BACKFILLING AROUND RETURN AIR BOOT AND POURING CONCRETE SLAB, REINFORCE BOTTOM OF AIR BOOT WITH RIGID NON-COMPRESSIVE BLOCKING.

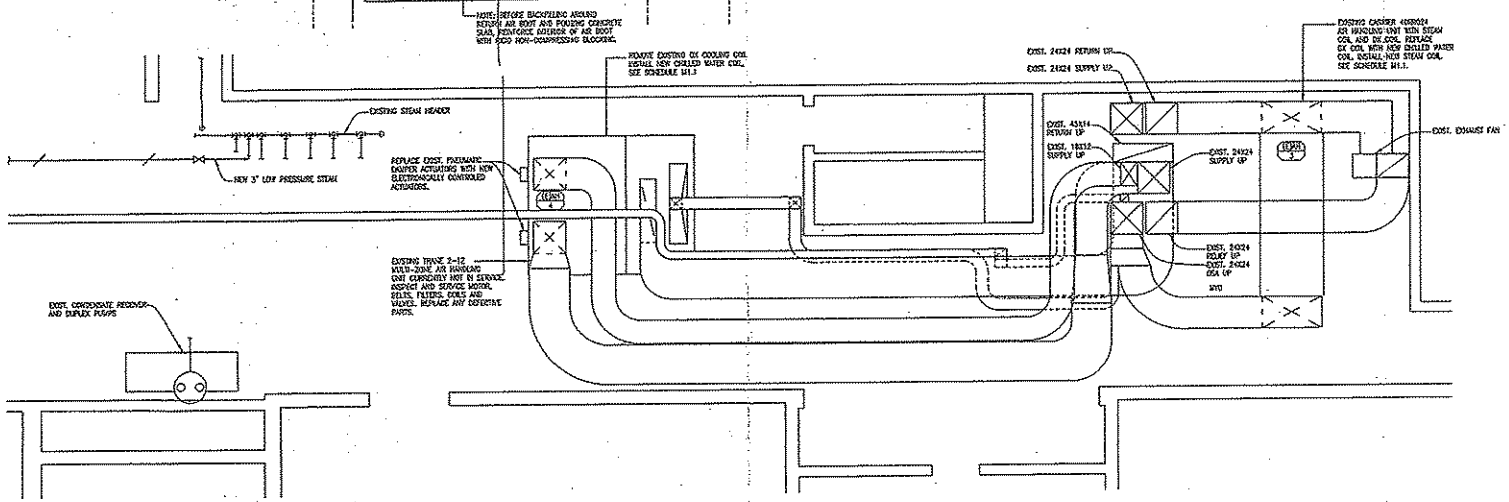

MECHANICAL ROOM PLAN

SCALE: 1/4"=1'-0"

Revision Number	Date	Description

Designed by: JLH
Date: 18 APR 96
Dwn by: JLH
Chk by: RAL
Contract Number: 3219
Plot Scale: 1"=10'
File Name:

DEPARTMENT OF THE AIR FORCE

B·W·A Benavides, Wells & Associates, P.C.
Architects Engineers
Lynchburg, Virginia

PROJECT NUMBER: CJKZ 96-0028

PROJECT INFORMATION

REVITALIZE BASE OPERATIONS
BASEMENT PLANS – MECHANICAL

Sheet reference number
M-4.0

Sheet 30 of 49

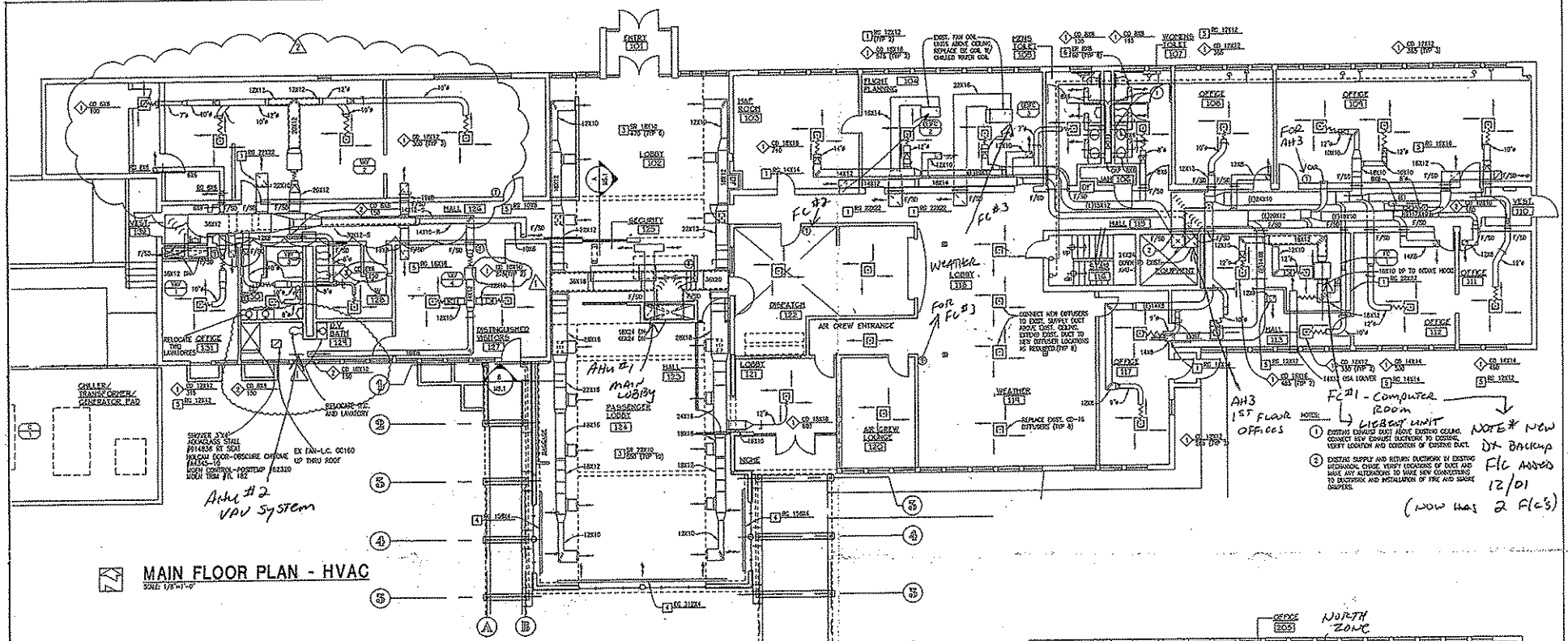

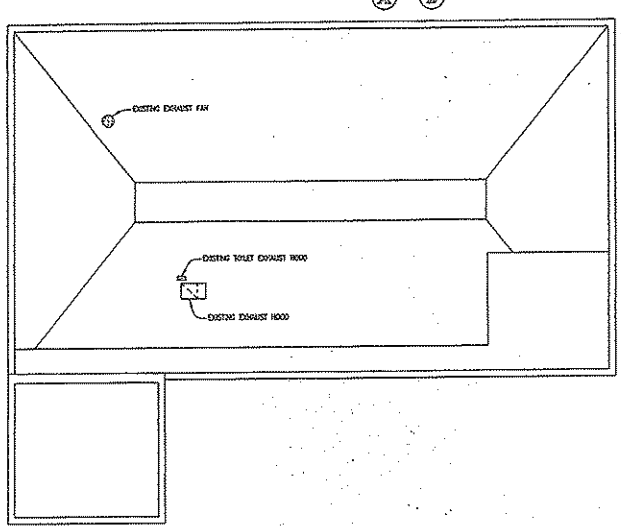

ROOF PLAN - HVAC
SCALE 1/8"=1'-0"

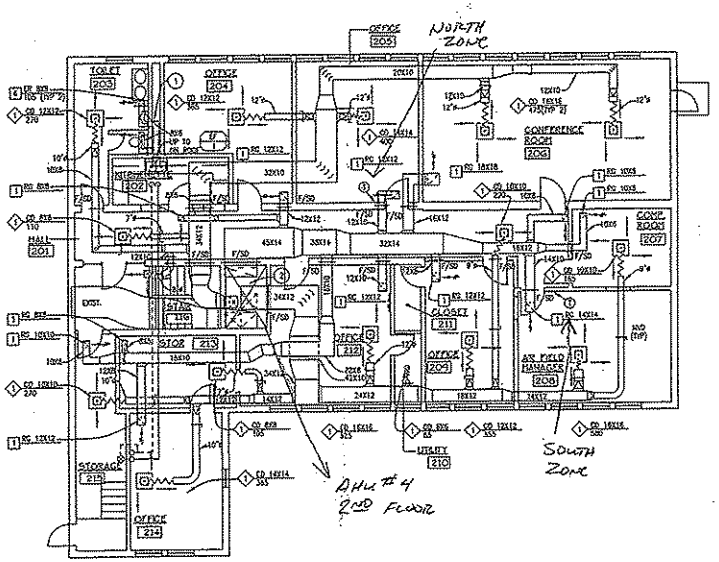

2ND FLOOR PLAN - HVAC
SCALE 1/8"=1'-0"

PROJECT NUMBER: GJKZ 96-0028
PROJECT INFORMATION
REVITALIZE BASE OPERATIONS FLOOR PLANS - HVAC

DEPARTMENT OF THE AIR FORCE

B·W·A

Designed by: JLH
Dwn by: JLH
Chk by: RAL
Plot Scale: 1"=8'
Date: 18 APR 96
Drawing number: 3219

Sheet reference number
M-4.1
Sheet 31 of 49

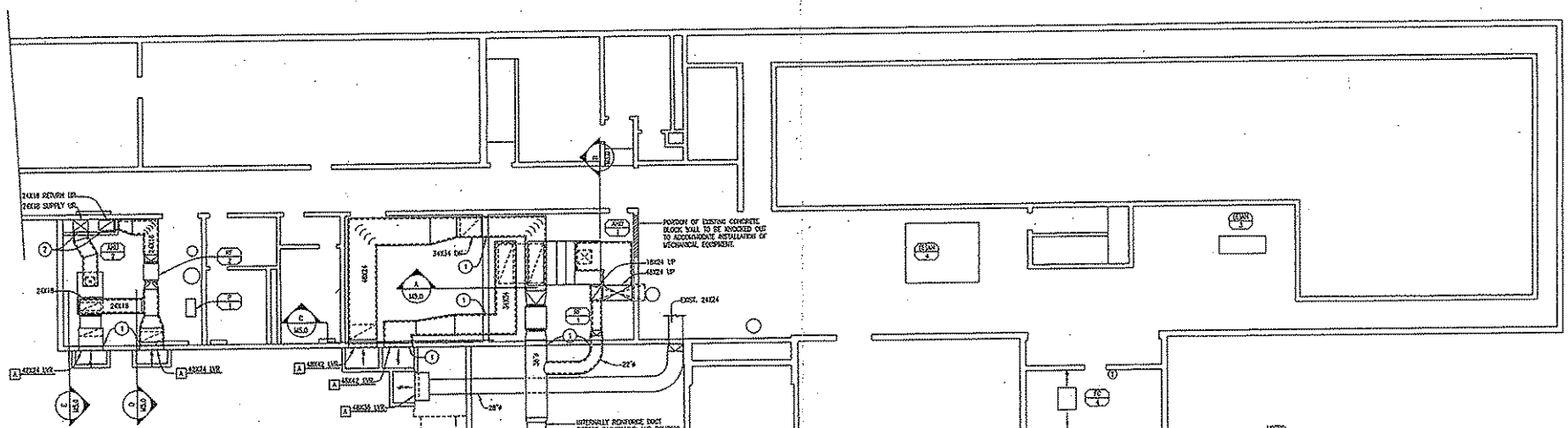

BASEMENT PLAN - MECHANICAL

SCALE: 1/4"=1'-0"

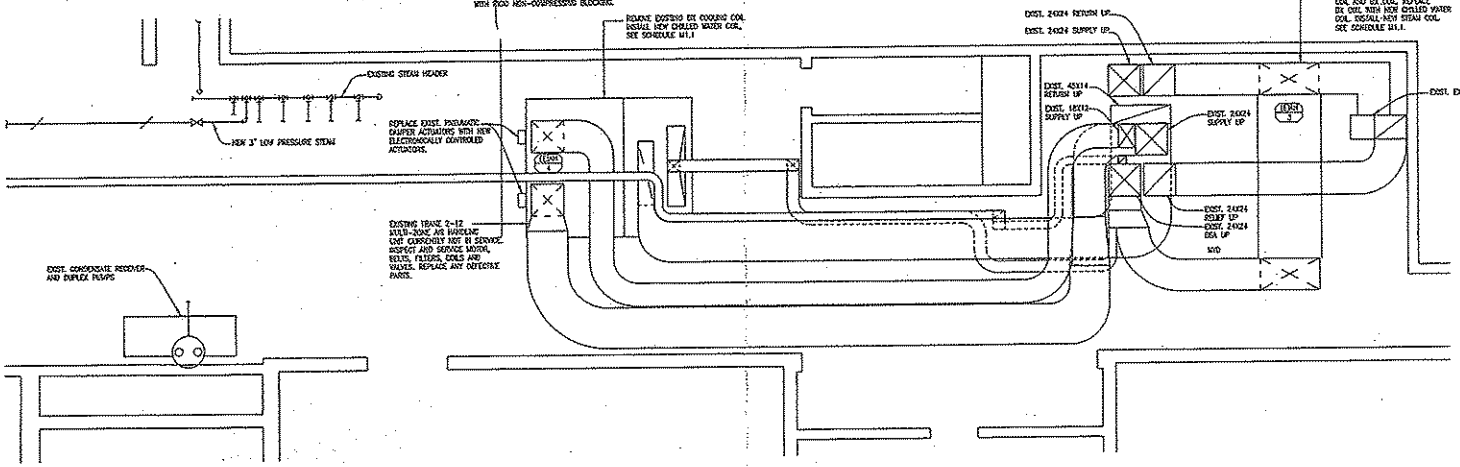

MECHANICAL ROOM PLAN

SCALE: 1/4"=1'-0"

Date: 18 APR 96
Designed by: JLH
Dwn by: JLH
Chk by: RAL
Plot Scale: 1"=8'
Drawing Number: 3219
File Name:

DEPARTMENT OF THE AIR FORCE

B·W·A
Burnsides, Wilson & Associates, Inc.
Architects
Engineers
Planners
1111 So. Broad
Spartan, Ga.
864-585-3.00

PROJECT NUMBER: GJKZ 96-0028
PROJECT INFORMATION
REVITALIZE BASE OPERATIONS
BASEMENT PLANS - MECHANICAL

Sheet reference number
M-4.0
Sheet 30 of 49

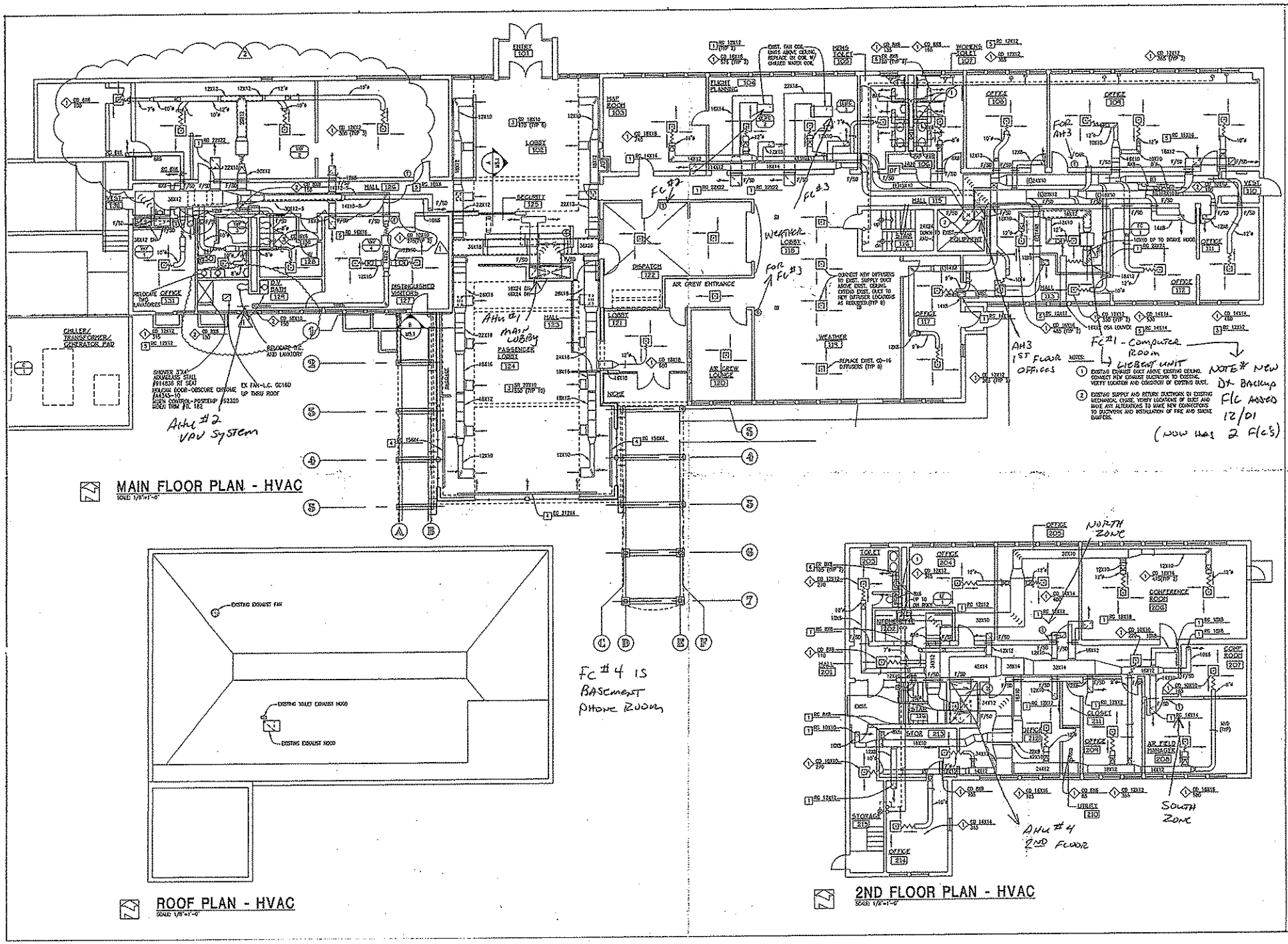
MAIN FLOOR PLAN - HVAC
SCALE: 1/8"=1'-0"
ROOF PLAN - HVAC
SCALE: 1/8"=1'-0"
2ND FLOOR PLAN - HVAC
SCALE: 1/8"=1'-0"
AHU #1 MAIN LOBBY
AHU #2 VAV System
FC #2
FC #3
FC #4 IS BASEMENT PHONE ROOM
AH3 1ST FLOOR OFFICES
FC#1 - Computer Room
LIEBERT UNIT
NOTE* NEW DX BACKUP F/C ADDED 12/01 (NOW HAS 2 F/C'S)
AHU #4 2ND FLOOR
NORTH ZONE
SOUTH ZONE
EXISTING EXHAUST FAN
EXISTING TOILET EXHAUST HOOD
EXISTING EXHAUST HOOD
PROJECT NUMBER: GJKZ 96-0028
PROJECT INFORMATION
REVITALIZE BASE OPERATIONS FLOOR PLANS - HVAC
Sheet reference number
M-4.1
Sheet 31 of 49

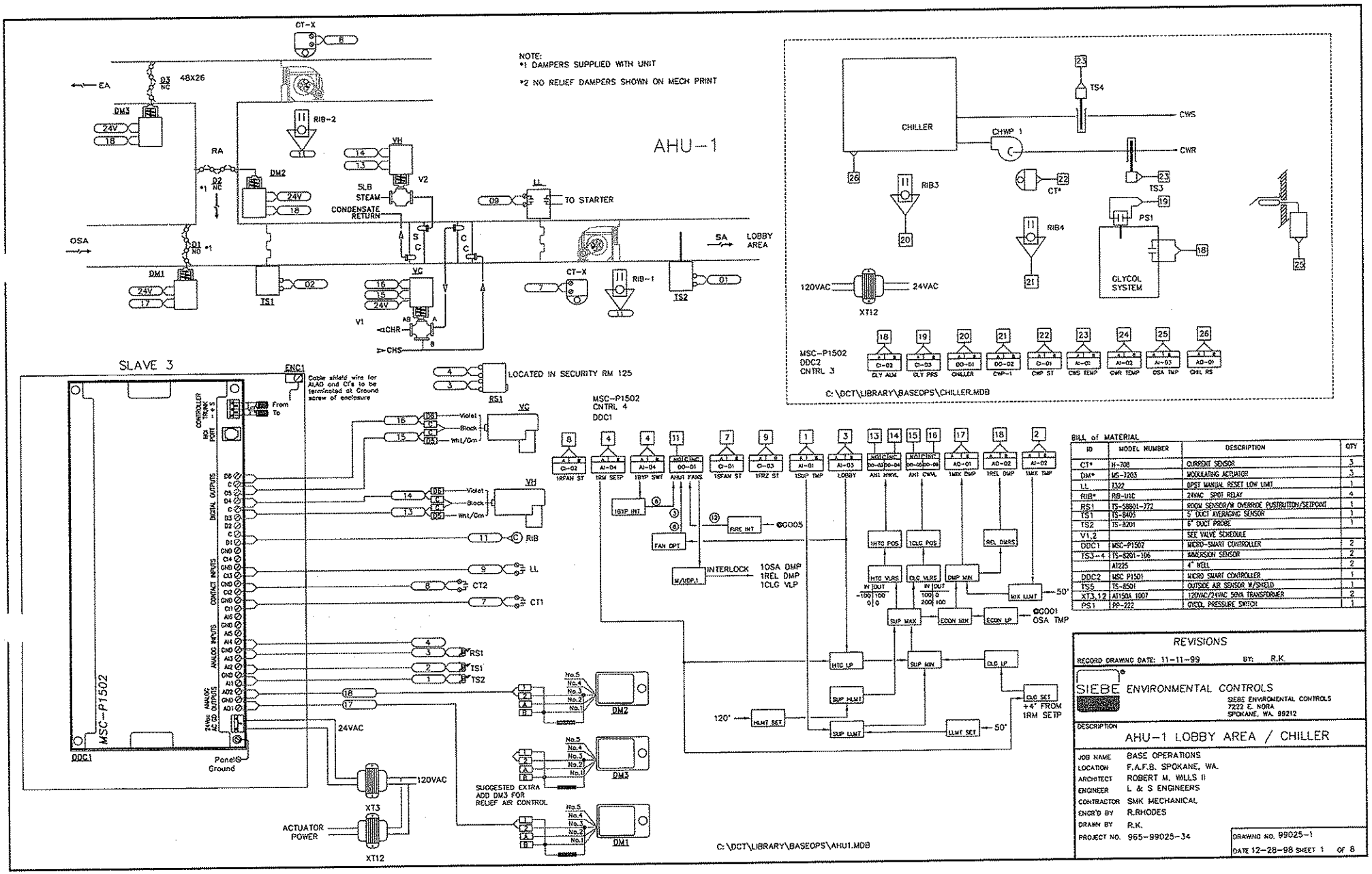

BILL of MATERIAL

ID	MODEL NUMBER	DESCRIPTION	QTY
CT*	H-708	CURRENT SENSOR	3
DM*	MS-7203	MODULATING ACTUATOR	3
LL	T322	SPST MANUAL RESET LOW LIMIT	1
RIB*	RB-U1C	24VAC SPDT RELAY	4
RS1	TS-58901-272	ROOM SENSOR/W OVERRIDE PUSHBUTTON/SETPOINT	1
TS1	TS-8403	5' DUCT AVERAGING SENSOR	1
TS2	TS-8201	6" DUCT PROBE	1
V1,2		SEE VALVE SCHEDULE	
DDC1	MSC-P1502	MICRO-SMART CONTROLLER	2
TS3-4	TS-8201-106	IMMERSION SENSOR	2
	A1225	4" WELL	2
DDC2	MSC P1501	MICRO SMART CONTROLLER	1
TS5	TS-8501	OUTSIDE AIR SENSOR W/SHIELD	1
XT3,12	AT150A 1007	120VAC/24VAC 50VA TRANSFORMER	2
PS1	PP-222	GYCOL PRESSURE SWITCH	1

REVISIONS

RECORD DRAWING DATE: 11-11-99 BY: R.K.

SIEBE ENVIRONMENTAL CONTROLS

SIEBE ENVIRONMENTAL CONTROLS
7222 E. NORA
SPOKANE, WA. 99212

DESCRIPTION

AHU-1 LOBBY AREA / CHILLER

JOB NAME	BASE OPERATIONS
LOCATION	F.A.F.B. SPOKANE, WA.
ARCHITECT	ROBERT M. WILLS II
ENGINEER	L & S ENGINEERS
CONTRACTOR	SMK MECHANICAL
ENGR'D BY	R.RHODES
DRAWN BY	R.K.
PROJECT NO.	965-99025-34

DRAWING NO. 99025-1

DATE 12-28-98 SHEET 1 OF 8

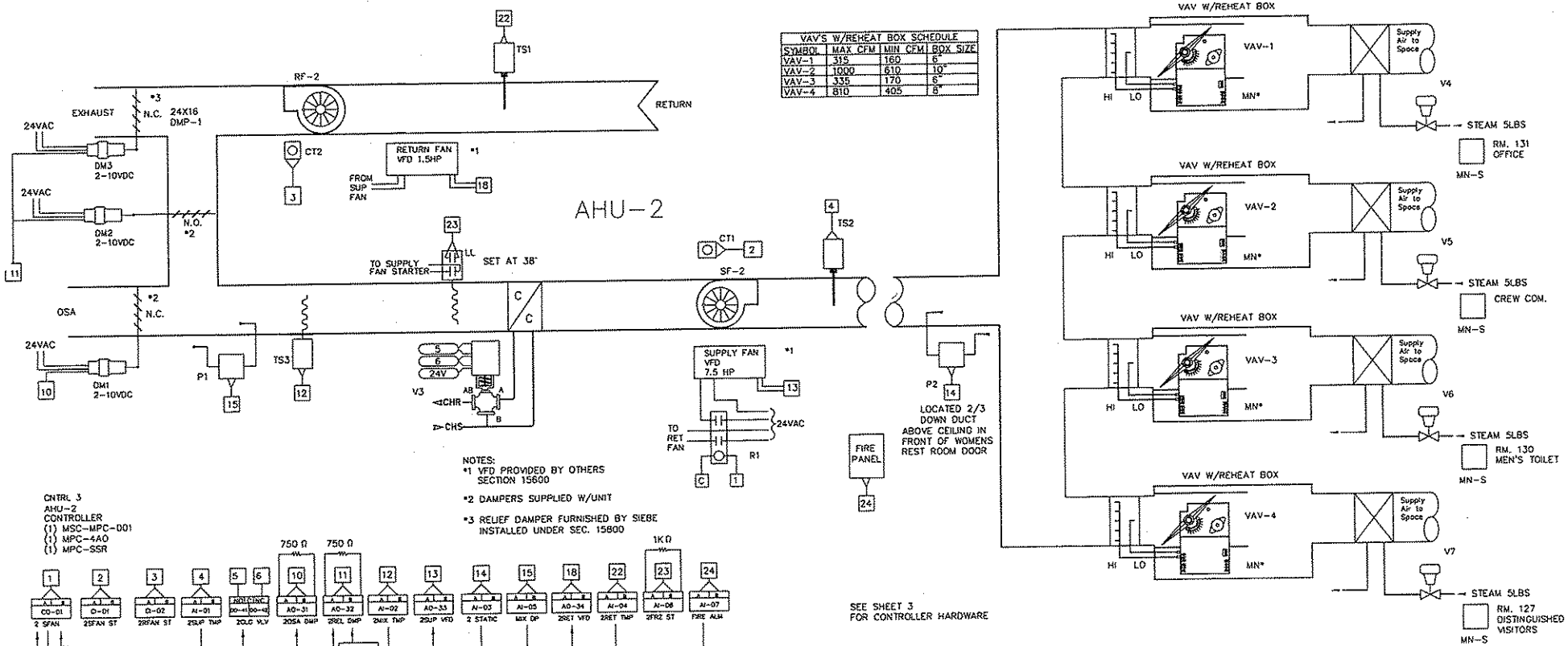

VAV'S W/REHEAT BOX SCHEDULE			
SYMBOL	MAX CFM	MIN CFM	BOX SIZE
VAV-1	315	160	6"
VAV-2	1000	610	10"
VAV-3	335	170	6"
VAV-4	810	405	8"

BILL OF MATERIALS

ID	MODEL NUMBER	DESCRIPTION	QTY
CT*	H-708	CURRENT SENSOR	2
DM*	LF24-SR	MODULATING ACTUATOR 2-10VDC	3
LL	T322	DPST MANUAL RESET LOW LIMIT	1
R1	R10B/SH2B	IDEC 2P2S RELAY	1
TS3	TS-8405	5' DUCT SENSOR	1
TS1-2	TS-8201	6" DUCT SENSOR	2
P*	PP-2446	DUCT STATIC PRESSURE TRANSDUCER	2
V3-7		SEE VALVE SCHEDULE	
MN*	MN-FL037	VAV BOX CONTROLLER	4
MN-S	MN-SDK	DELUXE SENSOR W/FOUR BUTTON KEYPAD AND LED DISPLAY	4
DMP-1	T1013	24X16 LOW LEAKAGE RELIEF DAMPER	1

REVISIONS

RECORD DRAWING DATE: 3-23-00 BY: R.K.

SIEBE ENVIRONMENTAL CONTROLS

SIEBE ENVIRONMENTAL CONTROLS
7222 E. NORA
SPOKANE, WA. 99212

DESCRIPTION: AHU-2

JOB NAME: BASE OPERATIONS
LOCATION: F.A.F.B. SPOKANE, WA.
ARCHITECT: ROBERT M. WILLS II
ENGINEER: L & S ENGINEERS
CONTRACTOR: SMK MECHANICAL
ENGR'D BY: R.RHODES
DRAWN BY: R.K.
PROJECT NO. 965-99025-34

DRAWING NO. 99025-2
DATE 12-28-98 SHEET 2 OF 8

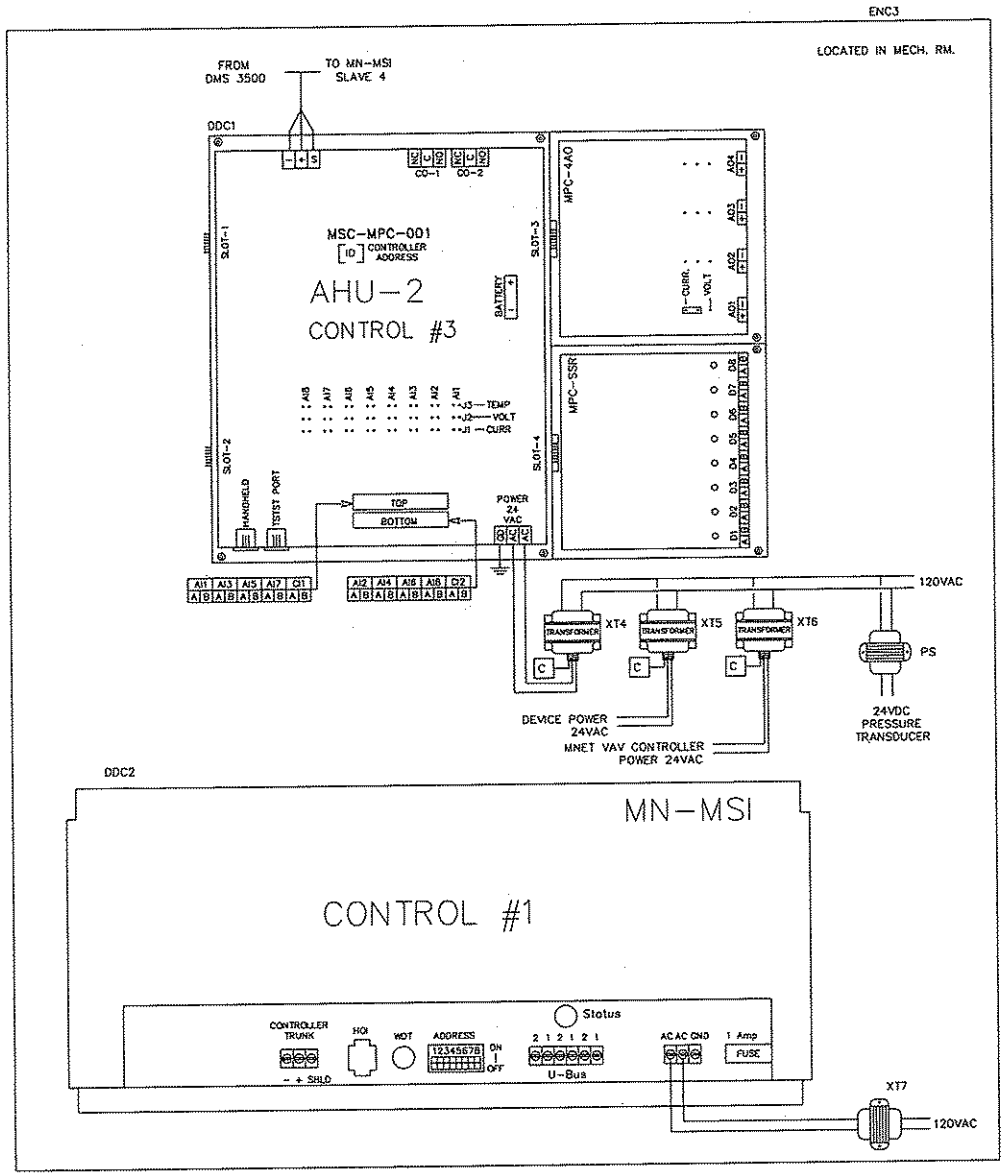

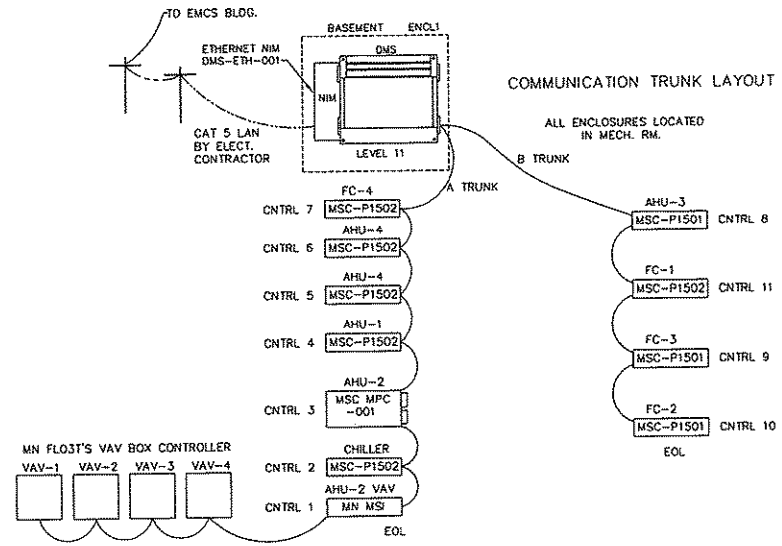

BILL OF MATERIALS

ID	MODEL NUMBER	DESCRIPTION	QTY
XT4-7	AT150A 1007	120/24V 50VA TRANSFORMER	4
DDC1	MSC-MPC-001	MULTI-PURPOSE CONTROLLER	1
DDC1	MPC-4A0	ANALOG OUTPUT EXPANSION BOARD	1
DDC1	MPC-SSR	SOLID STATE RELAY EXPANSION BOARD	1
DDC2	MN-MSI	ENHANCED MICROSMART CONTROLLER	1
DMS	DMS-3500	DIGITAL MANAGEMENT SYSTEM CONTROLLER	1
ENCL1	ENCL-201-TUB	DMS 3500 ENCLOSURE	1
ENCL1	ENCL-DOOR-PLA	ENCLOSURE DOOR	1
ENCL2	LOCAL PURCHASE	12X16X4 SCREW COVER ENCLOSURE	6
ENCL3	ENC-002	DOUBLE ENCLOSURE	1
NIM	DMS-ETH-001	ETHERNET NETWORK INTERFACE MODULE	1
PS	PS200-1-K-1-N	(MAMAC) 120VAC/24VDC POWER SUPPLY	1

REVISIONS

RECORD DRAWING DATE: 3-23-00 BY: R.K.

SIEBE ENVIRONMENTAL CONTROLS

SIEBE ENVIRONMENTAL CONTROLS
7222 E. NORA AVE
SPOKANE, WA. 99212

DESCRIPTION
SLAVE 3-4 PANEL LAYOUT/SYSTEM TRUNK LAYOUT

JOB NAME BASE OPERATIONS
LOCATION F.A.F.B. SPOKANE, WA.
ARCHITECT ROBERT M. WILLS II
ENGINEER L & S ENGINEERS
CONTRACTOR SMK MECHANICAL
ENGR'D BY R.RHODES
DRAWN BY R.K.
PROJECT NO. 965-99025-34

DRAWING NO. 99025-3
DATE 12-28-98 SHEET 3 OF 8

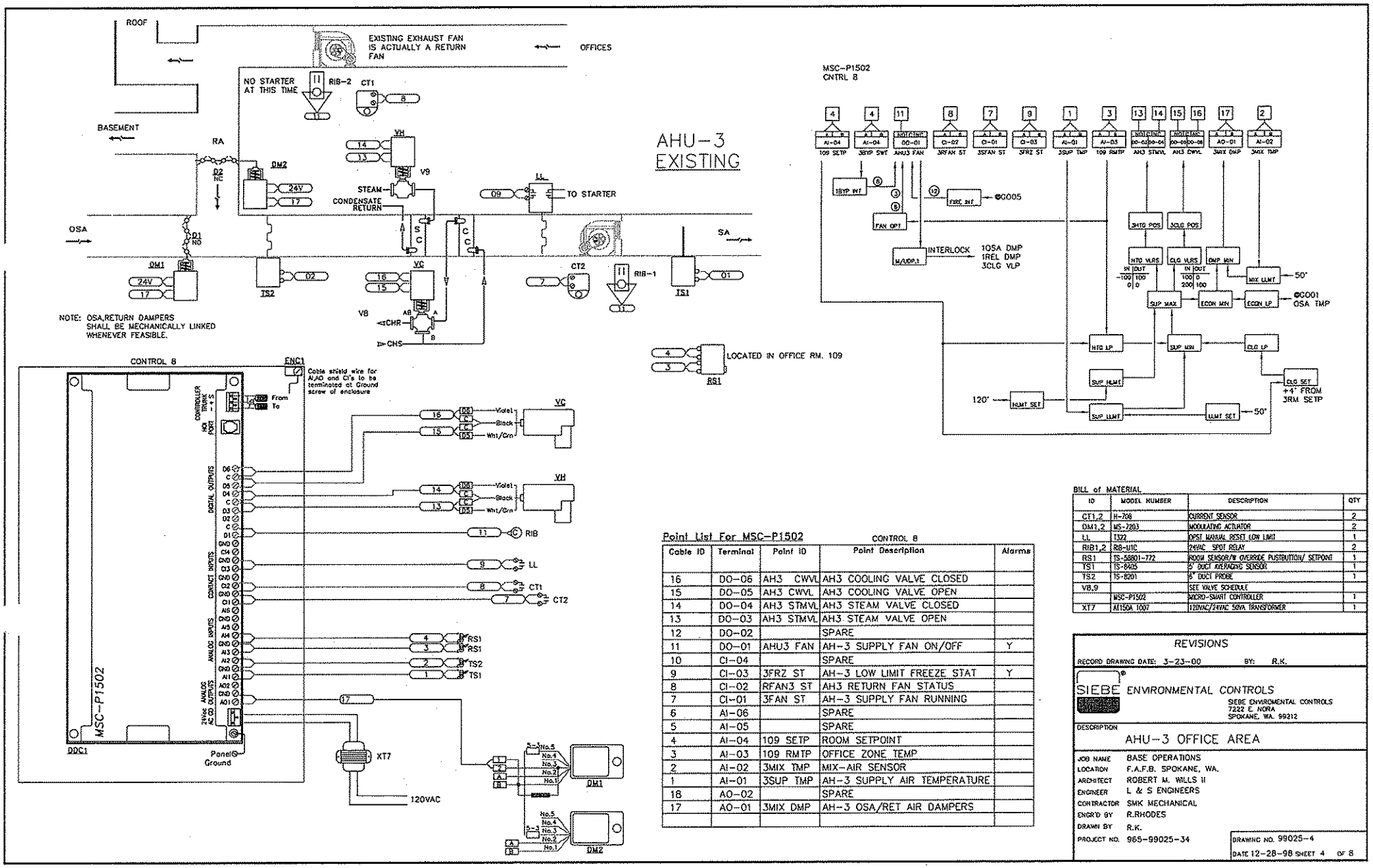

Point List For MSC-P1502

CONTROL 8

Cable ID	Terminal	Point ID	Point Description	Alarms
16	DO-06	AH3 CWVL	AH3 COOLING VALVE CLOSED	
15	DO-05	AH3 CWVL	AH3 COOLING VALVE OPEN	
14	DO-04	AH3 STMVL	AH3 STEAM VALVE CLOSED	
13	DO-03	AH3 STMVL	AH3 STEAM VALVE OPEN	
12	DO-02		SPARE	
11	DO-01	AHU3 FAN	AH-3 SUPPLY FAN ON/OFF	Y
10	CI-04		SPARE	
9	CI-03	3FRZ ST	AH-3 LOW LIMIT FREEZE STAT	Y
8	CI-02	RFAN3 ST	AH3 RETURN FAN STATUS	
7	CI-01	3FAN ST	AH-3 SUPPLY FAN RUNNING	
6	AI-06		SPARE	
5	AI-05		SPARE	
4	AI-04	109 SETP	ROOM SETPOINT	
3	AI-03	109 RMTP	OFFICE ZONE TEMP	
2	AI-02	3MIX TMP	MIX-AIR SENSOR	
1	AI-01	3SUP TMP	AH-3 SUPPLY AIR TEMPERATURE	
18	AO-02		SPARE	
17	AO-01	3MIX DMP	AH-3 OSA/RET AIR DAMPERS	

BILL of MATERIAL

ID	MODEL NUMBER	DESCRIPTION	QTY
CT1,2	H-708	CURRENT SENSOR	2
DM1,2	MS-2203	MODULATING ACTUATOR	2
LL	T322	OPST MANUAL RESET LOW LIMIT	1
RIB1,2	RIB-U1C	24VAC SPDT RELAY	2
RS1	TS-5501-772	ROOM SENSOR/W OVERRIDE PUSHBUTTON/ SETPOINT	1
TS1	TS-8405	5' DUCT AVERAGING SENSOR	1
TS2	TS-8201	8" DUCT PROBE	1
V8,9		SEE VALVE SCHEDULE	
	MSC-P1502	MICRO-SMART CONTROLLER	1
XT7	AI150A 1007	120VAC/24VAC 50VA TRANSFORMER	1

REVISIONS

RECORD DRAWING DATE: 3-23-00 BY: R.K.

SIEBE ENVIRONMENTAL CONTROLS

SIEBE ENVIRONMENTAL CONTROLS
7222 E. NORA
SPOKANE, WA. 99212

DESCRIPTION

AHU-3 OFFICE AREA

JOB NAME	BASE OPERATIONS
LOCATION	F.A.F.B. SPOKANE, WA.
ARCHITECT	ROBERT M. WILLS II
ENGINEER	L & S ENGINEERS
CONTRACTOR	SMK MECHANICAL
ENGR'D BY	R.RHODES
DRAWN BY	R.K.
PROJECT NO.	965-99025-34

DRAWING NO. 99025-4

DATE 12-28-98 SHEET 4 OF 8

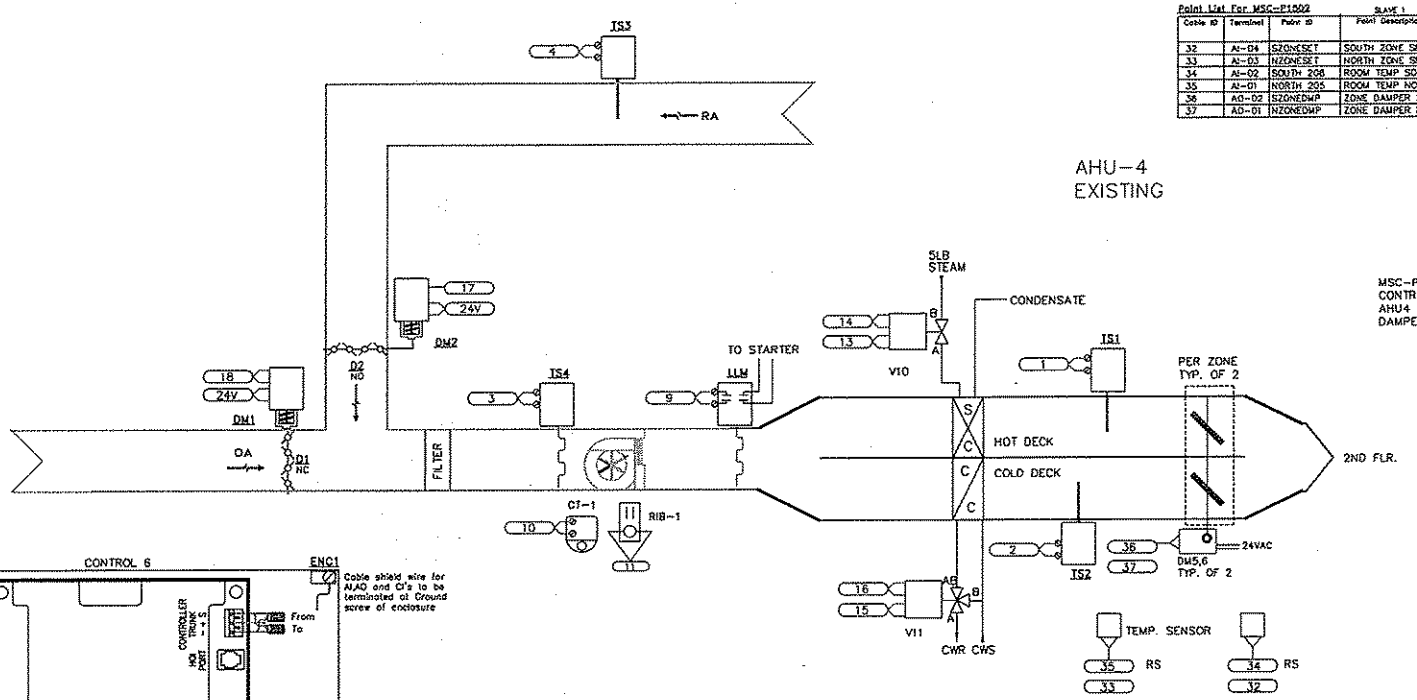

Point List For MSC-P1502 — SLAVE 1

Cable ID	Terminal	Point ID	Point Description
32	AI-04	S2ONESET	SOUTH ZONE SETPOINT
33	AI-03	N2ONESET	NORTH ZONE SETPOINT
34	AI-02	SOUTH 206	ROOM TEMP SOUTH ZONE
35	AI-01	NORTH 205	ROOM TEMP NORTH ZONE
36	AO-02	S2ONEDMP	ZONE DAMPER SOUTH ZONE
37	AO-01	N2ONEDMP	ZONE DAMPER NORTH ZONE

Point List For MSC-P1502 — CONTROL 5

Cable ID	Terminal	Point ID	Point Description
16	DO-06	AH3 CDVL	AH3 COLD DECK VALVE CLOSED
15	DO-05	AH3 CDVL	AH3 COLD DECK VALVE OPEN
14	DO-04	AH3 HDVL	AH3 HOT DECK VALVE CLOSED
13	DO-03	AH3 HDVL	AH3 HOT DECK VALVE OPEN
12	DO-02		SPARE
11	DO-01	AHU4FAN	SUPPLY/RETURN FAN START/STOP
10	CI-04	4SFANST	AH-4 SUPPLY FAN RUNNING
9	CI-03	4FRZ ALM	FREEZE STAT STATUS
4	AI-04	4RET TMP	RETURN AIR TEMP
3	AI-03	4MIX TMP	MIX-AIR TEMP
2	AI-02	AH4 CDTP	COLD DECK TEMP
1	AI-01	AH4 HDTP	HOT DECK TEMP
17	AO-02	4REL DMP	RELIEF DAMPER
18	AO-01	4MIX DMP	OSA/RETURN DAMPER

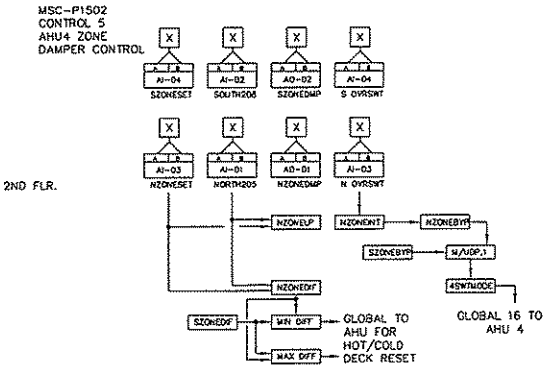

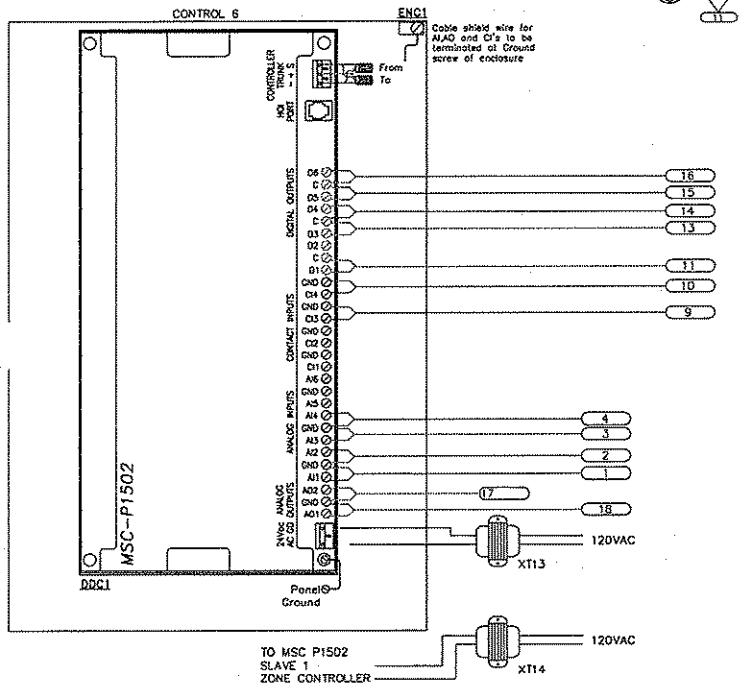

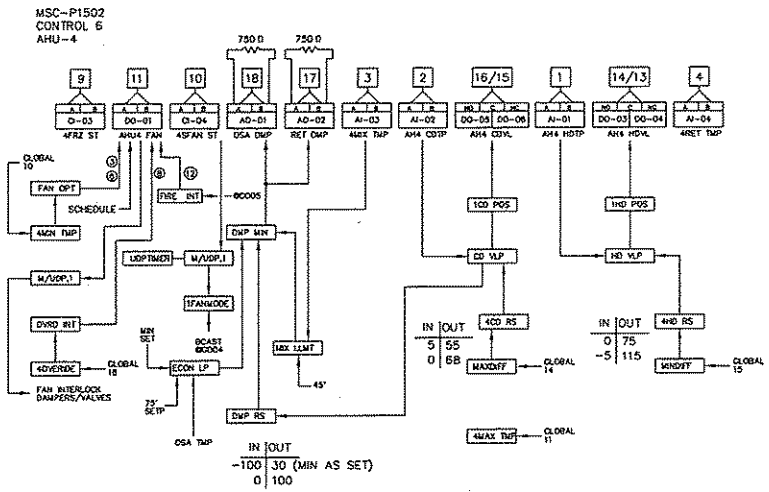

C:\DCT\LIBRARY\BASEOPS\AH4_ZDMP.MDB

BILL of MATERIAL

ID	MODEL NUMBER	DESCRIPTION	QTY
CT*	H-708	CURRENT SENSOR	1
DM*	MS-7203	MODULATING ACTUATOR	5
LLM	T322	DPST MANUAL RESET LOW LIMIT	1
RIB*	RB-D1C	24VAC SPDT RELAY	1
RS	TS-S8801-772	ROOM SENSOR/W OVERRIDE PUSHBUTTON/SETPOINT	2
TS1-3	TS-8201	8" DUCT PROBE	3
TS4	TS-8405	5' DUCT AVERAGING SENSOR	1
V10,11		SEE VALVE SCHEDULE	
	MSC-P1502	MICRO-SMART CONTROLLER	2
XT*	AT150A 1007	120VAC/24VAC 50VA TRANSFORMER	2

REVISIONS

RECORD DRAWING DATE: 11-12-99 BY: R.K.

SIEBE ENVIRONMENTAL CONTROLS

SEBE ENVIROMENTAL CONTROLS
7222 E. NORA
SPOKANE, WA. 99212

DESCRIPTION

AHU-4

JOB NAME	BASE OPERATIONS
LOCATION	F.A.F.B. SPOKANE, WA.
ARCHITECT	ROBERT M. WILLS II
ENGINEER	L & S ENGINEERS
CONTRACTOR	SMK MECHANICAL
ENGR'D BY	R.RHODES
DRAWN BY	R.K.
PROJECT NO.	965-99025-34

DRAWING NO. 99025-5

DATE 12-28-98 SHEET 5 OF 8