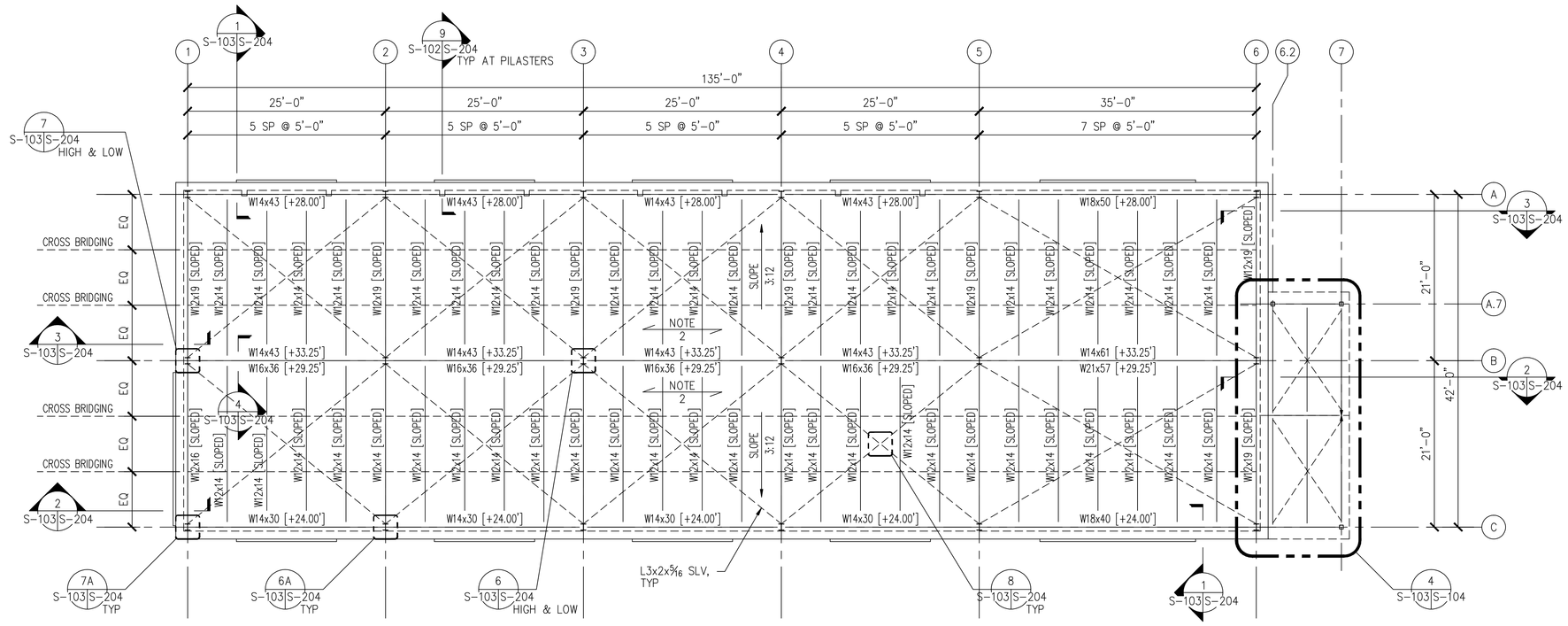

NOTES:
1. TOP OF STEEL BEAM ELEVATIONS ARE NOTED ON THE PLAN AS [±#.##'] RELATIVE TO GROUND FLOOR SLAB ELEVATION NOTED ON 2/S-101. FOR TOP OF BEAM ELEVATIONS AT EACH END OF SLOPE BEAMS, SEE ROOF SECTIONS AND DETAILS.
2. SEE STRUCTURAL NOTES FOR INFORMATION REGARDING ROOF DECK.
3. SEE COLUMN SCHEDULE ON SHEET S-201 FOR INFORMATION REGARDING COLUMNS.

1 S-103|S-103 ROOF FRAMING PLAN
SCALE 1/8" = 1'-0"

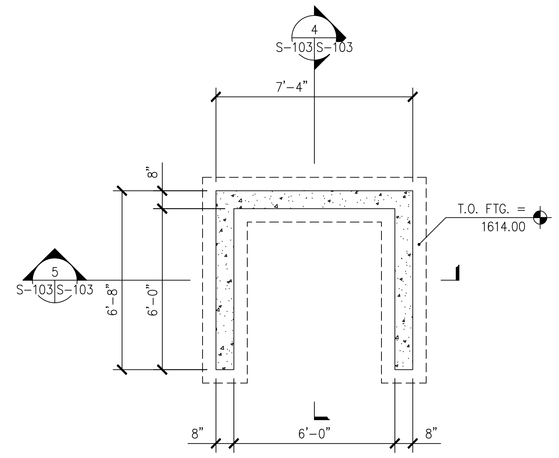

NOTE: SEE CIVIL DWGS. FOR LOCATION OF FUEL STATION.

2 S-103|S-103 FUEL STATION FOUNDATION PLAN
SCALE 3/8" = 1'-0"

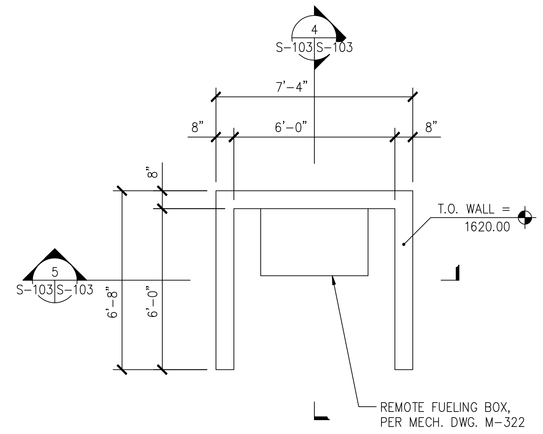

3 S-103|S-103 FUEL STATION WALL PLAN
SCALE 3/8" = 1'-0"

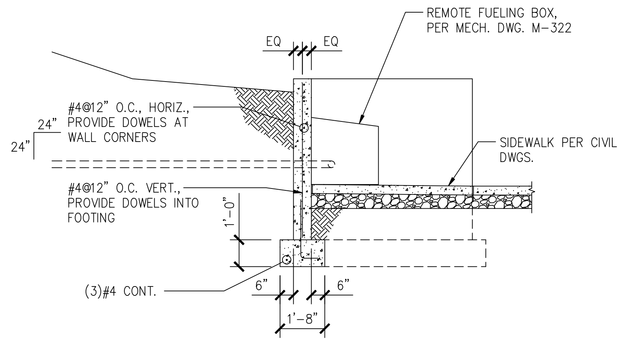

4 S-103|S-103 FUEL STATION SECTION
SCALE 3/8" = 1'-0"

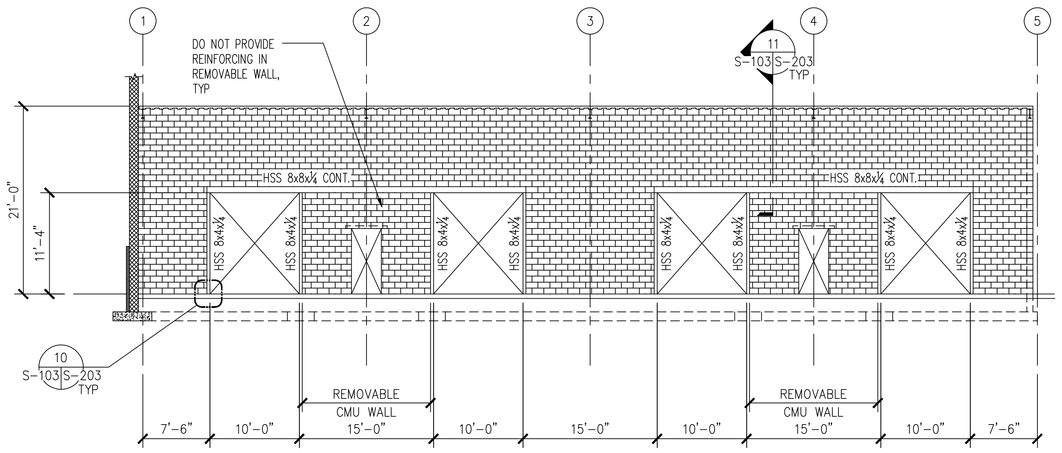

6 S-101,S-102|S-103 INTERIOR WALL ELEVATION
SCALE 1/8" = 1'-0"

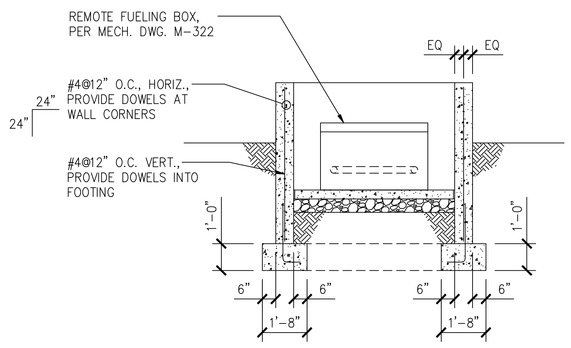

5 S-103|S-103 FUEL STATION SECTION
SCALE 3/8" = 1'-0"

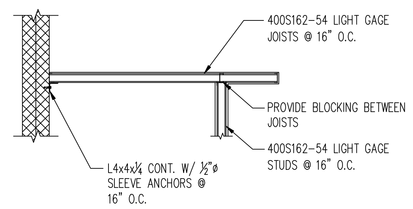

7 S-102|S-103 SECTION
SCALE 3/8" = 1'-0"

GRAPHIC SCALE

1/8" = 1'-0": 8' 0 6' 12' 18' 24'

3/8" = 1'-0": 2'-8" 0 2' 4' 6' 8'

CAUTION: IF THIS DRAWING IS A REDUCTION, GRAPHIC SCALES MUST BE USED.

REVISION	DATE	DESCRIPTION	DRAWN BY:	APPROVED BY:

DESIGNED BY: CMS
DRAWN BY: CAD
REVIEWED BY: JOW
APPROVED BY:
WORK ORDER NO: 04-213

DEPARTMENT OF HOMELAND SECURITY
FEDERAL EMERGENCY MANAGEMENT AGENCY
Post Office Box 129, Mt. Weather, Virginia 22611

AREA "A" POWER DESIGN PROJECT

PART III – BUILDING 714
ROOF FRAMING PLAN
– STRUCTURAL –

CONTRACT/JOB NO: HSFEMW-04-A-0091, TO 008
DRAWING FILE NO: EPS-9548
SCALE: AS SHOWN
DATE: SEPTEMBER 28, 2006
PLATE NO: S-103
SHEET 37 OF 65

COMMONWEALTH OF VIRGINIA
JOHN OATES WOODS, JR.
No. 9439
PROFESSIONAL ENGINEER