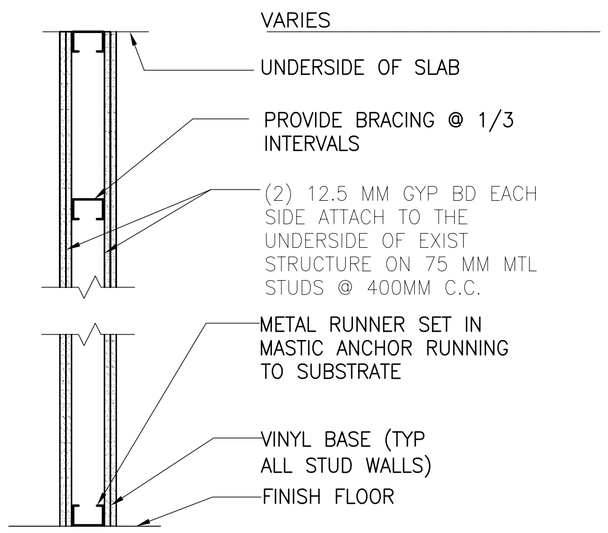

TYPE X GYP. BD.

1

1 HR RATED
U 425

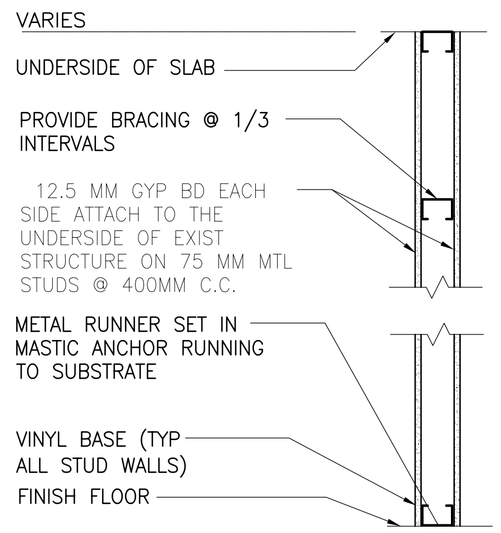

GYP. BD.

2

NON-RATED

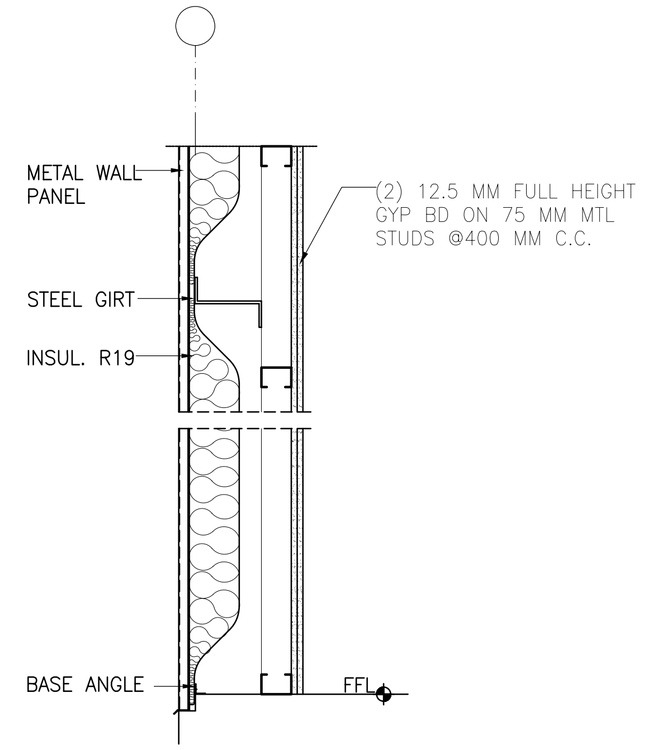

3A

1 HR RATED
U489
(AT HALLWAY AND VESTIBULES)

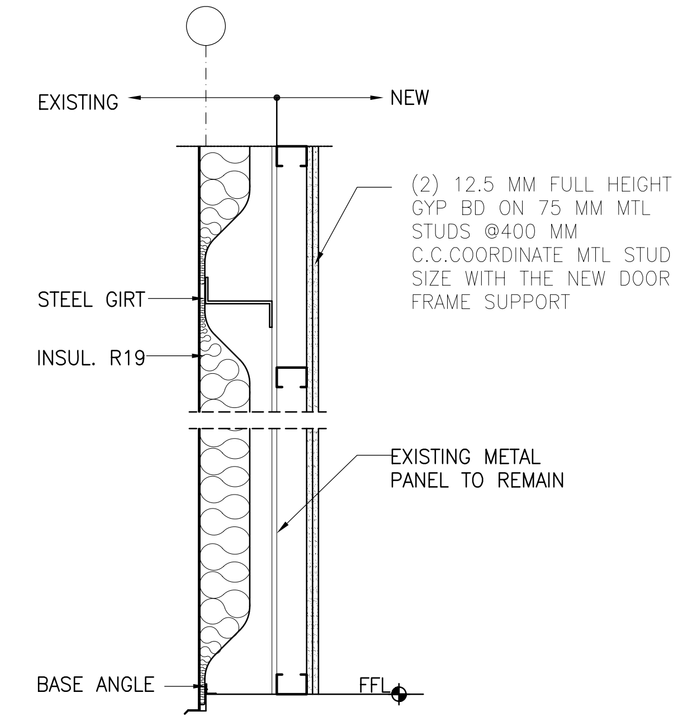

3B

1 HR RATED
U489

ASBUILT

GRAPHIC SCALE:

SEAL:

REV	DESCRIPTIONS	DATE	APPD.

REVISION

INTERNATIONAL BROADCASTING BUREAU
ENGINEERING & TECHNICAL OPERATIONS
WASHINGTON, D.C. 20547

Bader AlMulla & Bros. Co. W.L.L
Engineering Group

		DATE
DRAWN	HAK	10/06/04
CHK. BY.	JPB	11/06/04
ENGR.	JPB	11/06/04

APPROVALS
PROJ. MANAGER TC

SHORTWAVE EXPANSION PROJECT
PARTITION TYPE
KUWAIT

IQC No. XX-XX-XX
TASK No. X
PROJ. No. 03NC080
CAD DESIGN FILE NAME: FILENAME

DWG. No. BMB-AS-A-09 A-09
SCALE: AS SHOWN SHEET 1 OF SHT

30 Galesi Drive, Wayne, N.J. 07470 TEL: (973) 785-4545 FAX: (973) 785-0766 www.hansonengineers.com
HANSON
THALES BROADCAST & MULTIMEDIA
675 North Washington St., Alexandria, VA. 22314 TEL: (703) 838-5644 FAX: (703) 838-5264 www.thales-bm.com