REPAIR STORMWATER DRAINAGE AND DETENTION SYSTEMS
PROJECT SKXJ072201
103D AIR CONTROL SQUADRON

CONNECTICUT AIR NATIONAL GUARD
ORANGE, CONNECTICUT

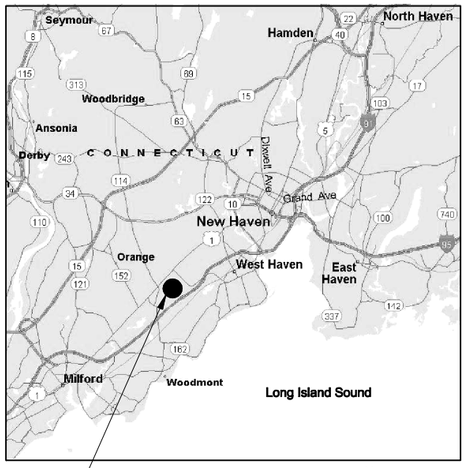

VICINITY MAP

N

PROJECT LOCATION
206 BOSTON POST ROAD
ORANGE, CT 06477

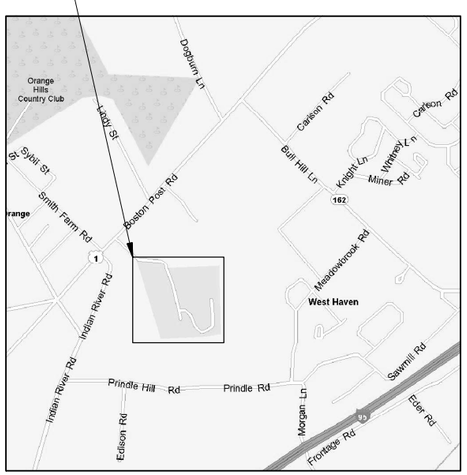

LOCATION MAP

N

INDEX TO DRAWINGS

SHEET NUMBER	DRAWING NUMBER	DRAWING DESCRIPTION
GENERAL		
1	G-1	TITLE SHEET, INDEX TO DRAWINGS, VICINITY AND LOCATION MAPS
2	G-2	ABBREVIATIONS, CIVIL AND EROSION CONTROL LEGENDS, AND DESIGNATION LEGENDS
3	G-3	GENERAL NOTES AND CONSTRUCTION STAKEOUT POINTS TABLE
CIVIL		
4	C-1	OVERALL SITE PLAN
5	C-2	SITE DEMOLITION PLAN
6	C-3	SITE GRADING AND UTILITIES PLAN - AREA 1
7	C-4	SITE GRADING AND UTILITIES PLAN - AREA 2
8	C-5	SITE GRADING AND UTILITIES PLAN - AREA 3
9	C-6	SITE GRADING AND UTILITIES PLAN - AREA 4
10	C-7	EROSION CONTROL PLAN
11	C-8	SITE SEWER STRUCTURE TABLES
12	C-9	BIORETENTION SECTIONS AND NOTES
13	C-10	SECTIONS AND DETAILS
14	C-11	EAST AND WEST DETENTION BASIN OUTLET STRUCTURES, DETAILS AND SECTIONS
15	C-12	EAST ROADWAY PLAN AND PROFILE AND CROSS SECTIONS
16	C-13	EAST ROADWAY CROSS SECTIONS
17	C-14	WEST ROADWAY PLAN AND PROFILE AND CROSS SECTIONS
STANDARD DETAILS		
18	SD-1	STANDARD DETAILS
19	SD-2	STANDARD DETAILS

FLYING YANKEES

SIGNATURES

AIR COMMANDER — DATE

BASE CIVIL ENGINEER — DATE

SAFETY — DATE

USING AGENCY — DATE

BIO/ENVIRONMENTAL — DATE

DEPARTMENT OF THE AIR FORCE
AIR NATIONAL GUARD

NO.	DATE	REVISION	BY	APVD

DSGN EL CAVANAUGH | DR JIM HOLMQUIST | CHK JE STUBER | APVD R FORDIANI

REPAIR STORMWATER DRAINAGE AND DETENTION SYSTEMS

103D AIR CONTROL SQUADRON
PROJECT SKXJ072201
CONNECTICUT AIR NATIONAL GUARD
ORANGE, CONNECTICUT

CH2MHILL

GENERAL
TITLE SHEET,
INDEX TO DRAWINGS,
VICINITY AND LOCATION MAPS

VERIFY SCALE
BAR IS ONE INCH ON ORIGINAL DRAWING.
0 1"

DATE	JUNE 2008
PROJ	359024
DWG	G-1
SHEET	1

BID DOCUMENTS

FILENAME: dn01g001_359204.dgn PLOT DATE: 7/31/2008 PLOT TIME: 9:21:10 AM

ABBREVIATIONS

AASHTO	AMERICAN ASSOCIATION OF STATE HIGHWAY AND TRANSPORTATION OFFICIALS
@	AT
ABDN	ABANDONED
ADDL	ADDITIONAL
ADJ	ADJACENT
AGGR	AGGREGATE
AHR	ANCHOR
AL	ALUMINUM
ALTN	ALTERNATE
ANG	AIR NATIONAL GUARD
ANSI	AMERICAN NATIONAL STANDARDS INSTITUTE
APPROX	APPROXIMATE
APVD	APPROVED
ARCH	ARCHITECTURAL
ASPH	ASPHALT
ASPRS	AMERICAN SOCIETY FOR PHOTOGRAMMETRY AND REMOTE SENSING
ASTM	AMERICAN SOCIETY FOR TESTING MATERIALS
AVG	AVERAGE
AWWA	AMERICAN WATER WORKS ASSOCIATION
BETW	BETWEEN
BF	BOTTOM FACE
BITUM	BITUMINOUS
BLDG	BUILDING
BMPS	BEST MANAGEMENT PRACTICES
BO	BLOW-OFF
BOT	BOTTOM
BRG	BEARING
BUR	BUILD UP ROOFING
△	CENTRAL ANGLE
C	CONDUIT
C TO C	CENTER TO CENTER
CB	CATCH BASIN
CFM	CUBIC FEET PER MINUTE
CHEM	CHEMICAL
CHK	CHECKED
CI	CAST IRON
CJ	CONSTRUCTION JOINT
CKT	CIRCUIT
CL	CENTER LINE
CLF	CHAIN LINK FENCE
CLR	CLEAR
CONC	CONCRETE
CONN	CONNECTION
CONNDOT	CONNECTICUT DEPARTMENT OF TRANSPORTATION
CONST	CONSTRUCTION
CONT	CONTINUOUS
CONT'D	CONTINUED
COR	CORNER
CORR	CORRUGATED
CP	CONCRETE PIPE
CTR	CENTER
CU FT	CUBIC FEET
DBL	DOUBLE
DEMO	DEMOLISH/DEMOLITION
DET	DETAIL
DIA	DIAMETER
DIAG	DIAGONAL
DIM	DIMENSION
DIP	DUCTILE IRON PIPE
DIR	DIRECTION
DISCH	DISCHARGE
DN	DOWN
DS	DOWNSPOUT
DSGN	DESIGNED
DWG	DRAWING
DWY	DRIVEWAY
E	EAST
EA	EACH
EF	EACH FACE
EL	ELEVATION
ELB	ELBOW
ELEC	ELECTRICAL
EM	ELECTRIC METER
EQL	EQUAL
EQL SP	EQUALLY SPACED
EQPT	EQUIPMENT
EQUIV	EQUIVALENT
ES	EACH SIDE
EW	EACH WAY
EXT	EXTERIOR OR EXTERNAL
EXST	EXISTING
FACIL	FACILITY
FDN	FOUNDATION
F.EXT	FIRE EXTINGUISHER
FED	FEDERAL
FLG	FLANGE
FLR	FLOOR
FNSH	FINISH
FT	FOOT OR FEET
GAL	GALLON
GM	GAS METER
GPD	GALLONS PER DAY
GS	GAS
GVL	GRAVEL
HDPE	HIGH DENSITY POLYETHYLENE
HGT OR H	HEIGHT
HH	HANDHOLE
HORIZ	HORIZONTAL
HR	HOUR
HWL	HIGH WATER LEVEL
HWY	HIGHWAY
ID	INSIDE DIAMETER OR IDENTIFICATION
IE	INVERT ELEVATION
INSTL	INSTALL
INVT	INVERT
JT	JOINT
L	LENGTH OF CURVE
LB	POUNDS
LB/D	POUNDS PER DAY
LF	LINEAR FEET
LG	LONG
LONG	LONGITUDINAL
LP	LIGHT POLE
LPT	LOW POINT ELEVATION
LR	LONG RADIUS
LT	LIGHT
MATL	MATERIAL
MAX	MAXIMUM
MET	METAL
MFR	MANUFACTURER
MGD	MILLION GALLONS PER DAY
MG/L	MILLIGRAMS PER LITER
MH	MANHOLE
MIN	MINIMUM
MISC	MISCELLANEOUS
MM	MILLIMETER
MON	MONUMENT
MTL	METAL
MW	MONITORING WELL
N	NORTH
NAD	NORTH AMERICAN DATUM
NE	NORTHEAST
NEMA	NATIONAL ELECTRIAL MANUFACTURER'S ASSOCIATION
NGVD	NATIONAL GEODETIC VERTIAL DATUM
NIC	NOT IN CONTRACT
NO.	NUMBER
NORM	NORMAL
NTS	NOT TO SCALE
NW	NORTHWEST
OC	ON CENTER
OD	OUTSIDE DIAMETER
OF	OUTSIDE FACE
O/H	OVERHEAD
OPNG	OPENING
OPP	OPPOSITE
PC	POINT OF CURVATURE
PERF	PERFORATED
PI	POINT OF INTERSECTION
PK	PARKING OR POINT KNOWN
PL	PLATE
PM	PAINT MARK
POC	POINT ON CURVE
POT	POINT ON TANGENT
PROJ	PROJECT
PSF	POUNDS PER SQUARE FOOT
PSI	POUNDS PER SQUARE INCH
PT	POINT OF TANGENCY
PVC	POINT OF VERTICAL CURVATURE OR POLYVINYL CHLORIDE
PVI	POINT OF VERTICAL INTERSECTION
PVMT	PAVEMENT
PVT	POINT OF VERTICAL TANGENCY
QDRNT	QUADRANT
RAD	RADIUS
RC	REINFORCED CONCRETE
RCCE	REINFORCED CONCRETE CULVERT END
RCP	REINFORCED CONCRETE PIPE
RDWY	ROADWAY
REINF	REINFORCE
REQD	REQUIRED
RTE	ROUTE
S	SOUTH
SB	SOUTH BOUND
SCH, SCHED	SCHEDULE
SE	SOUTHEAST
SECT	SECTION
SF	SQUARE FEET
SH	SHEET
SIM	SIMILAR
SPECD	SPECIFIED
SPECS	SPECIFICATIONS
SPG	SPACING
SQ	SQUARE
SS	STORM SEWER
SST	STAINLESS STEEL
STA	STATION
STD	STANDARD
STOR	STORAGE
STR	STRAIGHT
STRUCT	STRUCTURAL
STL	STEEL
SW	SOUTHWEST
SYMM	SYMMETRICAL
T	TREAD OR TANGENT LENGTH
T&B	TOP AND BOTTOM
TC	TOP OF CONCRETE
THK	THICK
T.O.	TOP OF
TPD	TONS PER DAY
TRANSV	TRANSVERSE
TW	TOP OF WALL
TYP	TYPICAL
UIC	UNITED INTERNATIONAL CORPORATION
UICO	UNITED ILLUMINATING COMPANY
UON	UNLESS OTHERWISE NOTED
VERT	VERTICAL
W	WEST OR WIDTH
W/	WITH
WDP	WOOD POST
WK	WEEK
WM	WATER METER
WS	WATER SURFACE
WTR	WATER
WWM	WOVEN WIRE MESH
XFMR	TRANSFORMER
YR	YEAR

CIVIL LEGEND

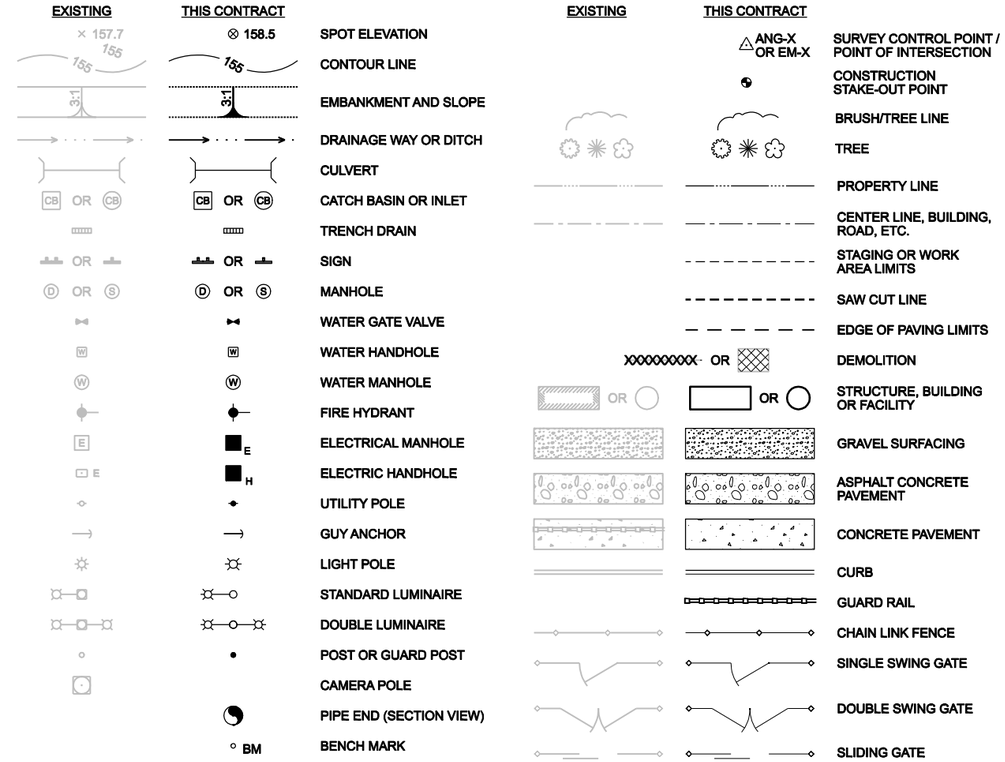

DESIGNATION LEGEND

SECTION, DETAIL AND VIEW DESIGNATIONS

ON DRAWING WHERE DETAIL IS REFERRED:

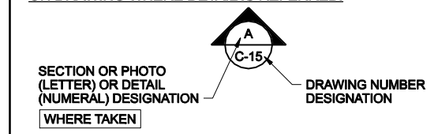

ON DRAWING WHERE DETAIL IS DRAWN:

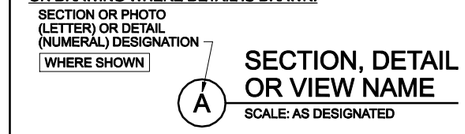

DRAWING NUMBER DESIGNATION:

C-2

INDICATES DRAWING NUMBER

INDICATES DISCIPLINE(S):

C CIVIL
G GENERAL

KEY NOTE DESIGNATIONS

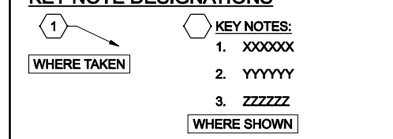

STANDARD DETAIL DESIGNATIONS

EROSION CONTROL LEGEND

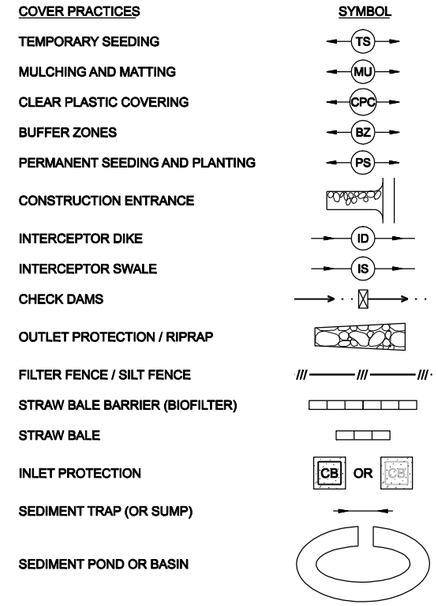

CONSTRUCTION SEQUENCE PLAN

1. INSTALL AND MAINTAIN EROSION CONTROL.
2. PREPARE CONTRACTOR STAGING AREA.
3. DEMOLISH BUILDING.
4. CONSTRUCT EAST DETENTION BASIN DITCH AND RAISE EAST DETENTION BASIN WEIR.
5. EXCAVATE WEST DETENTION BASIN AND CONSTRUCT NEW OUTFALL AFTER IMPROVEMENTS TO EAST DETENTION BASIN.
6. CONSTRUCT ROADWAY DRAIN OFFS AFTER EAST DETENTION BASIN IMPROVEMENTS.
7. CONSTRUCT BIORETENTION.
8. STAGED ROADWAY ASPHALT PAVING, DRAINAGE, AND WATER LINE WORK WHILE MAINTAINING BUILDING ACCESS.
9. POROUS PAVEMENT CONSTRUCTION AFTER ALL OTHER ACTIVITIES COMPLETED TO PREVENT CLOGGING.
10. ESTABLISH BIORETENTION VEGETATION.

GENERAL NOTE

1. THESE ARE STANDARD ABBREVIATIONS AND LEGENDS. THEREFORE, NOT ALL OF THE INFORMATION SHOWN MAY BE USED ON THIS PROJECT.

NO.	DATE	DR	CHK	APVD
1	07/08	EL CAVANAUGH	JIM HOLMQUIST	JE STUBER

DSGN — REVISION — BY — APVD

ADDED ABBREVIATIONS AND SEQUENCE PLAN. — JMH — MDM

MD MITTAG

REPAIR STORMWATER DRAINAGE AND DETENTION SYSTEMS

103D AIR CONTROL SQUADRON
PROJECT SKXJ072201
CONNECTICUT AIR NATIONAL GUARD
ORANGE, CONNECTICUT

CH2MHILL

GENERAL
ABBREVIATIONS, CIVIL AND EROSION CONTROL LEGENDS, AND DESIGNATION LEGENDS

VERIFY SCALE
BAR IS ONE INCH ON ORIGINAL DRAWING.
0 1"

DATE	JUNE 2008
PROJ	359024
DWG	G-2
SHEET	2

BID DOCUMENTS

FILENAME: dn01g002_359204.dgn PLOT DATE: 7/31/2008 PLOT TIME: 9:21:23 AM

GENERAL NOTES

SURVEY NOTES:

1. THIS PLAN WAS PREPARED FROM RECORD RESEARCH, OTHER MAPS, LIMITED FIELD MEASUREMENTS AND OTHER SOURCES. IT IS NOT TO BE CONSTRUED AS A PROPERTY/BOUNDARY OR LIMITED PROPERTY/BOUNDARY SURVEY AND IS SUBJECT TO SUCH FACTS AS SAID SURVEYS MAY DISCLOSE.
2. THE PROPERTY LINES DEPICTED HEREON HAVE BEEN COMPILED FROM VARIOUS SOURCES AS MAY BE REFERENCED HEREON AND ARE NOT TO BE CONSTRUED AS BEING OBTAINED AS THE RESULT OF A FIELD SURVEY, NOR DO THEY REPRESENT A PROPERTY/BOUNDARY OPINION.
3. TOPOGRAPHY DEPICTED HEREON IS A RESULT OF A FIELD SURVEY BY UNITED INTERNATIONAL CORPORATION IN SEPTEMBER 2007AND CONFORMS TO A CLASS "T-2" TOPOGRAPHIC SURVEY ACCURACY IN THE "STANDARDS FOR SURVEYS AND MAPS IN THE STATE OF CONNECTICUT", AND A "CLASS-1" MAP IN ASPRS ACCURACY STANDARDS.
4. NORTH ARROW AND GRID LINES ARE BASED ON CONNECTICUT GRID (NAD 1927). ELEVATIONS ARE BASED ON NGVD 1929.
5. CONTROL POINTS:

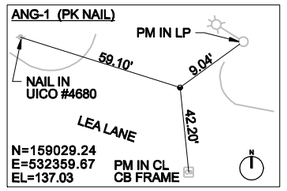

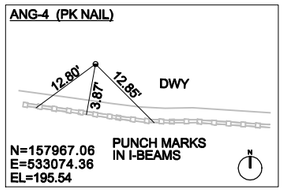

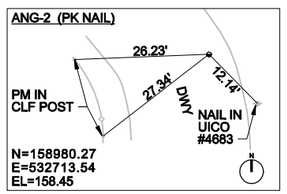

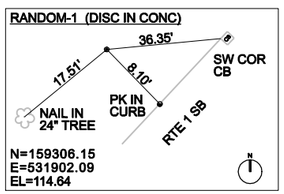

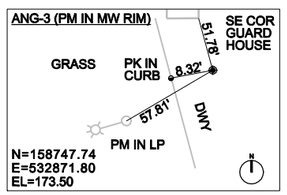

SITE NOTES:

1. EXISTING TOPOGRAPHY, STRUCTURES, AND SITE FEATURES ARE SHOWN SCREENED AND/OR LIGHT-LINED. NEW FINISH GRADE, STRUCTURES, AND SITE FEATURES ARE SHOWN HEAVY-LINED.
2. MAINTAIN, RELOCATE, OR REPLACE EXISTING SURVEY MONUMENTS, CONTROL POINTS, AND STAKES WHICH ARE DISTURBED OR DESTROYED. PERFORM THE WORK TO PRODUCE THE SAME LEVEL OF ACCURACY AS THE ORIGINAL MONUMENT(S) IN A TIMELY MANNER, AND AT THE CONTRACTOR'S EXPENSE.
3. COORDINATES AND DIMENSIONS SHOWN FOR ROADWAY IMPROVEMENTS ARE TO FACE OF CURB OR EDGE OF PAVEMENT.
4 STAGING AREA SHALL BE FOR CONTRACTOR'S EMPLOYEE PARKING, CONTRACTOR'S TRAILERS AND ON-SITE STORAGE OF MATERIALS.
5. PROVIDE TEMPORARY FENCING AS NECESSARY TO MAINTAIN SECURITY AT ALL TIMES.
6. ELEVATIONS GIVEN ARE TO FINISH GRADE UNLESS OTHERWISE SHOWN.
7. SLOPE UNIFORMLY BETWEEN CONTOURS AND SPOT ELEVATIONS SHOWN.
8. UNLESS SHOWN ON THE PLANS, ALL DISTURBED AREAS NOT RECEIVING A HARD SURFACE SHALL BE COVERED WITH GRASS.
9. CONTRACTOR SHALL BE RESPONSIBLE FOR IMPLEMENTING AND MAINTAINING EROSION CONTROL DEVICES DURING CONSTRUCTION. EROSION CONTROL DEVICES (3125-165), (3125-187), (3125-130) AND (3125-170) SHALL BE IMPLEMENTED AND AUGMENTED WITH OTHER BMP's AS NEEDED TO MEET EROSION CONTROL REQUIREMENTS.
10. CONTRACTOR SHALL TAKE OTHER MEASURES WHERE NECESSARY TO PREVENT EROSION MATERIALS FROM LEAVING THE SITE. CONTRACTOR TO SUBMIT EROSION CONTROL PLAN.
11. RIP-RAP TO BE 2-FOOT MINIMUM THICKNESS, PER CONNDOT SECTION M.12.02 AND INSTALLED PER SECTION 7.03, UNDERLAIN BY GEOTEXTILE.
12. THERE SHALL BE NO SEPARATE PAYMENT FOR CONNDOT SPECIFICATION REFERENCES.
13. CONTRACTOR TO CONDUCT GEOTECHNICAL TESTING PER SECTION 31 23 23 FILL AND BACKFILL.
14. CONTRACTOR STAGING AREA TO BE DETERMINED DURING PRE-BID SITE MEETING.
15. REVEGETATION ON SLOPES GREATER THAN 3:1 REQUIRE EROSION MAT.
16. MEET ALL REGULATORY CODES, STANDARDS, AND REGULATIONS AS STATED OR LISTED IN SPECIFICATIONS.

PAVING NOTES:

1. PAVEMENT UNDERDRAIN TO EXTEND THE LENGTH OF THE NEW POROUS CONCRETE PAVEMENT.
2. ROADWAY MILLING SHALL FOLLOW CONNECTICUT DEPARTMENT OF TRANSPORTATION (CONNDOT) STANDARDS. MILL MINIMUM 1.5" BELOW PROPOSED GRADE.
3. APPLY TACK COAT PRIOR TO RESURFACING AND FOR EACH PAVEMENT LIFT PER CONNDOT SECTION .04.06.
4. ROAD RESURFACING SHALL BE CLASS 3 MIX PER CONNDOT SECTION M.04. MAXIMUM 3-INCHES THICK LIFT AND TOP LIFT TO BE 1.5-INCHES THICK. PLACED PER CONNDOT SECTION 04.06.
5. NEW CURB SHALL BE 6-INCH PER CONNDOT SECTION 8.15, SEE (3216-335).
6. DEVELOP AND SUBMIT TO CONTRACTING OFFICER FOR APPROVAL A TRAFFIC CONTROL PLAN THAT COMPLIES WITH PART 6 OF THE MANUAL ON UNIFORM TRAFFIC CONTROL DEVICES TO KEEP ACCESS OPEN TO BUILDING 18 AND MAIN BUILDING DURING CONSTRUCTION.

YARD PIPING AND UTILITIES NOTES:

1. EXISTING UNDERGROUND UTILITIES OBTAINED FROM AS-BUILTS AND FROM FIELD SURVEY AND THEREFORE THEIR LOCATIONS MUST BE CONSIDERED APPROXIMATE. IT IS POSSIBLE THERE MAY BE OTHERS, THE EXISTENCE OF WHICH IS PRESENTLY NOT KNOWN OR SHOWN. DETERMINE THE EXISTENCE AND EXACT LOCATION OF THESE ITEMS TO AVOID DAMAGE. CONTRACTOR SHALL FIELD VERIFY DEPTH AND LOCATION PRIOR TO EXCAVATION. PROTECT AND MAINTAIN IN SERVICE ALL EXISTING UTILITIES DURING CONSTRUCTION.
2. EXISTING PIPING AND EQUIPMENT ARE SHOWN SCREENED AND/OR LIGHT-LINED. NEW PIPING AND EQUIPMENT ARE SHOWN HEAVY-LINED.
3. ALL PIPES SHALL HAVE A CONSTANT SLOPE BETWEEN INVERT ELEVATIONS UNLESS A FITTING IS SHOWN.
4. FOR TRENCHING AND BACKFILL, SEE (3123-110), (3344-780) AND SPECIFICATIONS.
5. WHERE THE LOCATION OF THE WATER PIPE IS NOT CLEARLY DEFINED IN DIMENSIONS ON THE DRAWINGS, THE SEWER PIPE SHALL NOT BE LAID CLOSER HORIZONTALLY THAN 10 FEET FROM A WATER PIPE EXCEPT WHERE THE BOTTOM OF THE WATER PIPE WILL BE AT LEAST 12-INCHES ABOVE THE TOP OF THE SEWER PIPE, IN WHICH CASE THE SEWER PIPE SHALL NOT BE LAID CLOSER HORIZONTALLY THAN 6 FEET FROM THE WATER PIPE. WHERE WATER LINES CROSS UNDER GRAVITY-FLOW SEWER LINES, THE SEWER PIPE, FOR A DISTANCE OF AT LEAST 10 FEET EACH SIDE OF THE CROSSING, SHALL BE FULLY ENCASED IN CONCRETE OR SHALL BE MADE OF PRESSURE PIPE WITH NO JOINT LOCATED WITHIN 3 FEET HORIZONTALLY OF THE CROSSING. WATER LINES SHALL IN ALL CASES CROSS ABOVE SEWAGE FORCE MAINS OR INVERTED SIPHONS AND SHALL BE NOT LESS THAN 2 FEET ABOVE THE SEWER MAIN. JOINTS IN THE SEWER MAIN, CLOSER HORIZONTALLY THAN 3 FEET TO THE CROSSING, SHALL BE ENCASED IN CONCRETE. CONCRETE ENCASEMENT SHALL EXTEND 12-INCHES FROM PIPE.
6. CONNECT NEW CATCH BASINS TO EXISTING PIPING, PROVIDE REPLACEMENT PIPE IF DAMAGED FROM DEMOLITION.
7. UNDERGROUND UTILITY, STRUCTURE AND FACILITY LOCATIONS DEPICTED AND NOTED HEREON MUST BE CONSIDERED AS APPROXIMATE. EXISTENCE OF ALL FEATURES MUST BE FIELD DETERMINED AND VERIFIED BY THE APPROPRIATE AUTHORITIES PRIOR TO CONSTRUCTION. CONTACT CONTRACTING OFFICER TO MARK AIR NATIONAL GUARD OWNED UTILITIES PRIOR TO CONSTRUCTION AND CALL BEFORE YOU DIG 1-800-922-4455. THE CONTRACTOR SHALL BE RESPONSIBLE FOR VERIFICATION OF ALL EXISTING INFORMATION IN THE FIELD.

CONSTRUCTION STAKEOUT POINTS

POINT ID	NORTHING	EASTING	ELEVATION	COMMENTS
D1	158378.50	533036.43	178.83	
D2	158360.79	533040.19	180.00	
D3	158346.48	533041.77	180.98	
D4	158327.94	533048.96	182.00	
D5	158325.58	533082.36	192.31	
EAST ROADWAY				
R1	158410.82	533112.54	201.11	STATION 9+70, BEGIN ROADWAY CONSTRUCTION
R2	158400.84	533111.96	200.23	STATION 9+80, PI
R3	158372.43	533110.32	197.74	STATION 10+08, PI
R4	158348.07	533108.12	195.53	STATION 10+33, PC
R5	158295.92	533086.81	190.94	STATION 10+90
R6	158332.04	533090.50	193.41	STATION 10+54, BEGIN CURB OMITTMENT
R7	158308.71	533080.05	191.12	STATION 10+84, END CURB OMITTMENT
R8	158295.32	533102.60	191.25	STATION 10+82, BEGIN CURB OMITTMENT
R9	158273.18	533082.41	189.16	STATION 11+08, END CURB OMITTMENT
R10	158267.01	533046.74	186.88	STATION 11+40, END ROADWAY CONSTRUCTION
WEST ROADWAY				
R11	158243.28	532770.24	168.50	STATION 3+00, BEGIN ROADWAY CONSTRUCTION
R12	158249.55	532794.44	170.98	STATION 3+25
R13	158255.81	532818.65	173.42	STATION 3+50
R14	158258.32	532828.33	174.35	STATION 3+60, END ROADWAY CONSTRUCTION

CONSTRUCTION STAKEOUT POINTS (CONT'D)

POINT ID	NORTHING	EASTING	ELEVATION
1	158780.03	532620.52	155.00
2	158774.98	532621.04	155.00
3	158757.70	532627.23	150.00
4	158754.33	532609.61	155.00
5	158753.04	532604.78	155.00
6	158669.02	532627.29	155.00
7	158664.64	532633.55	155.00
8	158671.22	532650.41	150.00
9	158653.15	532653.44	155.00
10	158658.42	532677.87	155.00
11	158677.18	532672.68	150.00
12	158679.28	532691.74	155.00
13	158733.21	532666.07	150.00
14	158759.65	532663.43	150.00
15	158765.84	532658.66	150.00
16	158772.24	532676.24	155.00
17	158784.04	532655.96	155.00
18	158788.91	532654.83	155.00
19	158580.27	532682.31	161.00
20	158578.65	532697.95	161.00
21	158567.45	532692.53	158.00
22	158557.56	532708.39	161.00
23	158534.67	532690.14	161.00
24	158537.25	532713.29	161.00
25	158495.59	532721.85	161.00
26	158424.31	532717.09	161.00
27	158366.09	532742.49	157.00
28	158316.21	532767.45	161.00
29	158300.32	532758.77	157.00
30	158286.85	532750.36	161.00
31	158281.22	532759.20	161.00
32	158285.95	532770.23	161.00
33	158613.31	532962.28	178.00
34	158600.20	532969.55	177.00
35	158463.26	533009.69	177.75
36	158461.56	533003.12	180.00
37	158375.85	533024.13	182.00
38	158377.97	533042.23	180.00
39	158368.59	533053.49	185.00
40	158359.35	533031.24	182.00
41	158343.91	533033.08	183.00
42	158347.89	533055.75	186.00
43	158328.25	533057.57	185.00
44	158330.67	533070.48	190.00
45	158307.54	533069.82	190.87
46	158323.31	533058.94	188.00
47	158283.50	533093.30	190.17
48	158267.30	533109.53	186.12
49	158273.74	532767.45	165.00
50	158265.72	532771.91	169.00
51	158279.36	532781.12	165.00
52	158269.85	532792.06	170.00
54	158631.77	532686.63	162.88
55	158619.66	532687.79	163.60
56	158666.57	532617.36	154.12
57	158660.84	532606.47	153.18
58	158776.99	532587.77	152.18
59	158017.05	533113.95	190.00
60	158034.88	533141.10	191.00
61	158032.26	533148.20	189.00
62	158018.76	533130.61	189.00
63	158016.83	533124.58	190.00
64	158013.40	533125.79	191.00
65	158013.22	533137.01	190.00
66	158014.40	533147.75	190.00
67	158000.46	533140.43	195.00
68	157992.66	533132.38	198.00
69	157990.24	533143.72	198.00
70	157997.31	533152.72	198.00
71	157985.18	533133.59	198.20
72	157985.30	533143.22	198.59
73	157985.36	533152.86	199.00
74	158774.11	532576.12	151.86
75	158241.77	532710.94	165.23
76	158178.35	532726.87	163.36
77	158169.45	532692.50	163.87
78	158671.02	532664.77	150.00
79	158774.07	532629.57	154.50
80	158784.79	532626.69	154.50
81	158604.29	532698.46	167.00
82	158612.55	532699.36	166.00
83	158613.74	532692.79	165.00
84	158573.16	532662.64	166.00
85	158581.19	532660.26	165.00
86	158540.35	532672.56	167.00
87	158550.38	532674.14	167.00

NOTE:

1. POINTS ARE REFERENCED ON DRAWINGS C-3 THRU C-6 AND DRAWINGS C-12 AND C-14. COORDINATES FOR PROPOSED SEWER STRUCTURES CAN BE FOUND ON DRAWING C-8.

NO.	DATE	REVISION	BY	APVD
1	07/08	CLARIFIED PAVING NOTES AND STAKEOUT POINTS.	JMH	MDM

DSGN EL CAVANAUGH | DR JM HOLMQUIST | CHK JE STUBER | APVD MD MITTAG

REPAIR STORMWATER DRAINAGE AND DETENTION SYSTEMS

103D AIR CONTROL SQUADRON
PROJECT SKXJ072201
CONNECTICUT AIR NATIONAL GUARD
ORANGE, CONNECTICUT

CH2MHILL

GENERAL
GENERAL NOTES AND CONSTRUCTION STAKEOUT POINTS TABLE

VERIFY SCALE
BAR IS ONE INCH ON ORIGINAL DRAWING.
0 1"

DATE	JUNE 2008
PROJ	359024
DWG	G-3
SHEET	3

BID DOCUMENTS

FILENAME: dn01g003_359204.dgn PLOT DATE: 8/1/2008 PLOT TIME: 3:34:02 PM

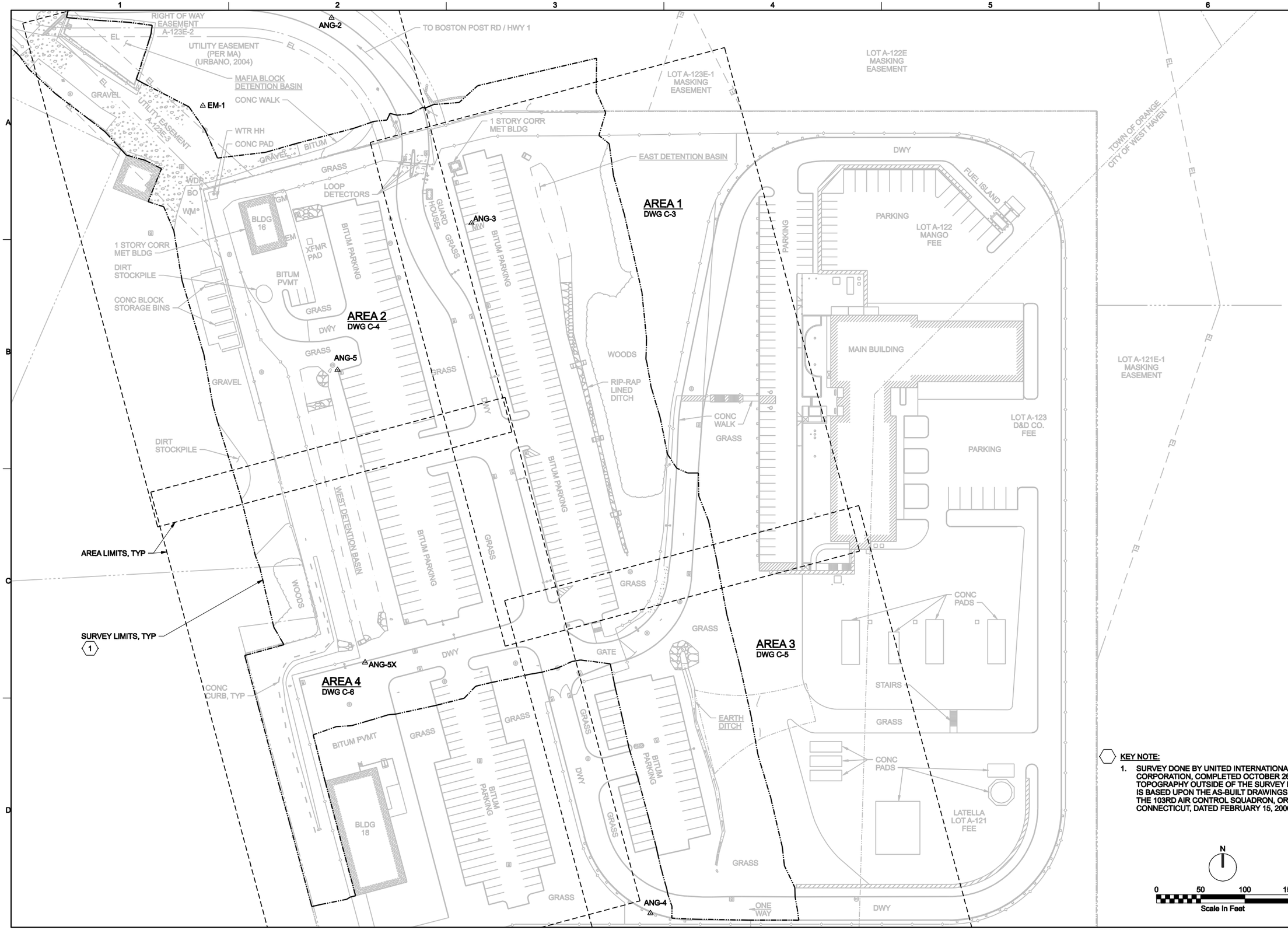

KEY NOTE:

1. SURVEY DONE BY UNITED INTERNATIONAL CORPORATION, COMPLETED OCTOBER 26, 2007. TOPOGRAPHY OUTSIDE OF THE SURVEY LIMITS IS BASED UPON THE AS-BUILT DRAWINGS FOR THE 103RD AIR CONTROL SQUADRON, ORANGE, CONNECTICUT, DATED FEBRUARY 15, 2006.

N

0 50 100 150
Scale In Feet

NO.	DATE	REVISION	BY	APVD

DSGN EL CAVANAUGH | DR JIM HOLMQUIST | CHK JE STUBER | APVD MD MITTAG

REPAIR STORMWATER DRAINAGE AND DETENTION SYSTEMS

103D AIR CONTROL SQUADRON
PROJECT SKXJ072201
CONNECTICUT AIR NATIONAL GUARD
ORANGE, CONNECTICUT

CH2MHILL

CIVIL
OVERALL SITE PLAN

VERIFY SCALE
BAR IS ONE INCH ON ORIGINAL DRAWING.
0 1"

DATE	JUNE 2008
PROJ	359024
DWG	C-1
SHEET	4

BID DOCUMENTS

FILENAME: de05c101_359204.dgn PLOT DATE: 7/31/2008 PLOT TIME: 9:22:02 AM

DEMOLISH CATCH BASIN
DEMOLISH ASPH CURB
MILL RDWY
DEMOLISH CONC WALK AS NEEDED
REMOVE AND REPLACE CLF TO ACCOMPLISH GRADING
DEMOLISH CATCH BASIN
DEMOLISH ASPH CURB
EAST DETENTION BASIN
GRASS
RIP-RAP BERM, TYP
EARTH DITCH
BITUM PARKING LOT
GATE
ONE WAY
CP ANG-3
MW
1-STORY CORR MET BLDG
GUARD HOUSE
BITUM DWY
E-BUR
T-BUR
GS
DEMOLISH 8' CLF
DEMOLISH 1 STORY CORR MET BLDG
DEMOLISH ASPH CURB
XFMR PAD
DEMOLISH CATCH BASIN
MILL ROADWAY
RIP-RAP BERM
WEST DETENTION BASIN
DEMOLISH ASPH CURB
DEMOLISH ASPH PVMT
CONC PAD
8" CLF
BITUM PVMT
1 STORY CORR MET BLDG
DEMOLISH PK STALLS, AND ASPH PVMT
DEMOLISH 8' CLF
CONC BLOCK STORAGE BINS
DIRT STOCKPILE
REMOVE AND REPLACE CLF TO INSTALL STORM SEWER

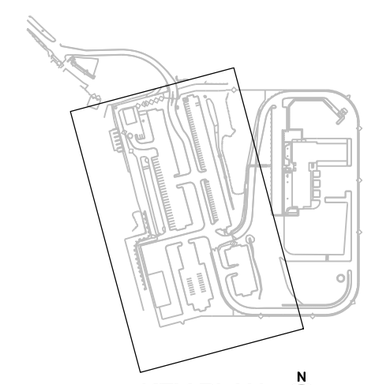

KEY PLAN
NTS

KEY NOTES:

1. ABANDON ALL UTILITIES TO THE BUILDING AND DEMOLISH.
2. MAINTAIN POWER FROM TRANSFORMER TO GUARD HOUSE TO MEET CURRENT NEMA AND ELECTRICAL CODES.
3. VERIFY WATER LINES ARE ABANDONED PRIOR TO DEMOLITION OF BUILDING AND CATCH BASINS.

0 40 80 120
Scale In Feet

NO.	DATE	REVISION	BY	APVD
1	07/08	CLARIFIED CB DEMOLITION AND REVISED ROAD MILLING.	JMH	MDM

DSGN EL CAVANAUGH | DR JIM HOLMQUIST | CHK JE STUBER | APVD MD MITTAG

REPAIR STORMWATER DRAINAGE AND DETENTION SYSTEMS

103D AIR CONTROL SQUADRON
PROJECT SKXJ072201
CONNECTICUT AIR NATIONAL GUARD
ORANGE, CONNECTICUT

CH2MHILL

CIVIL

SITE DEMOLITION PLAN

VERIFY SCALE
BAR IS ONE INCH ON ORIGINAL DRAWING.
0 1"

DATE	JUNE 2008
PROJ	359024
DWG	C-2
SHEET	5

BID DOCUMENTS

FILENAME: dd05c131_359204.dgn PLOT DATE: 7/31/2008 PLOT TIME: 9:22:25 AM

NOTE:
1. SEE DWG C-8 FOR STORM AND SANITARY SEWER STRUCTURE TABLES. THIS NOTE APPLIES TO DWGS C-3 THRU C-6.

KEY PLAN
NTS

N

0 20 40 60
Scale In Feet

9.5'x6' CONC OUTLET
T.O. WALL EL=171.04
INVT OUT=165.50

T.O. WEIR WALL EL=169.24
INVT 18" OPNG=166.55
BOT STRUCT EL=165.30

EAST DETENTION BASIN

INCREASE EXST CONC WEIR BOX HEIGHT 3'-0" AND MODIFY BAR SCREEN (1 / C-11)

CONST GRASS-SWALE

CONST RIP-RAP DITCH

(B / C-10)

(A / C-10)

INSTALL RIP-RAP AT 2:1 SLOPE 2' HIGH ACROSS CHANNEL AND 9' UP SIDE SLOPES, TYP

WIDEN AND REGRADE DRAINAGE DITCH

SLOPED CHANNEL (1 / C-10) (2 / C-10)

CB 3N (3344-780), TYP

EAST ROADWAY, SEE DWG C-12

CB 2N, LOCATE AND CONNECT TO EXST 18" RCP

BITUM PARKING LOT

1 STORY CORR MET BLDG

MW ANG-3

FIRE HYDRANT

GUARD HOUSE

ELEC M-1

GRASS

DWY

MATCHLINE SEE DWG C-4

MATCHLINE SEE DWG C-5

MATCHLINE SEE DWG C-6

NO.	DATE	REVISION	BY	APVD
1	07/08	REVISED ROADWAY PAVING.	JMH	MDM

DSGN EL CAVANAUGH | DR JM HOLMQUIST | CHK JE STUBER | APVD MD MITTAG

REPAIR STORMWATER DRAINAGE AND DETENTION SYSTEMS

103D AIR CONTROL SQUADRON
PROJECT SKXJ072201
CONNECTICUT AIR NATIONAL GUARD
ORANGE, CONNECTICUT

CH2MHILL

CIVIL
SITE GRADING AND UTILITIES PLAN AREA 1

VERIFY SCALE
BAR IS ONE INCH ON ORIGINAL DRAWING.
0 1"

DATE	JUNE 2008
PROJ	359024
DWG	C-3
SHEET	6

BID DOCUMENTS

FILENAME: dn05c141_359204.dgn PLOT DATE: 7/31/2008 PLOT TIME: 9:22:57 AM

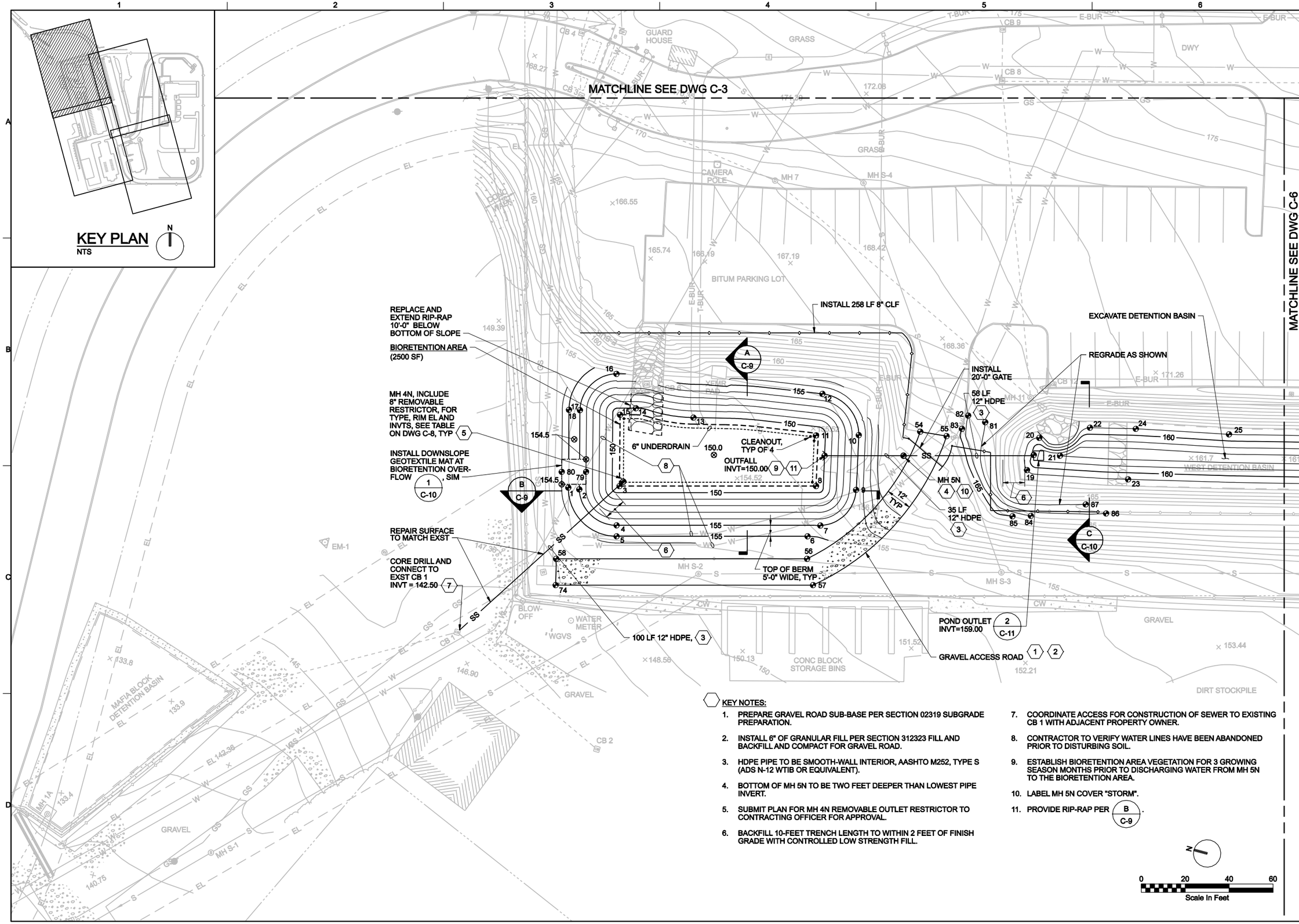

KEY NOTES:

1. PREPARE GRAVEL ROAD SUB-BASE PER SECTION 02319 SUBGRADE PREPARATION.
2. INSTALL 6" OF GRANULAR FILL PER SECTION 312323 FILL AND BACKFILL AND COMPACT FOR GRAVEL ROAD.
3. HDPE PIPE TO BE SMOOTH-WALL INTERIOR, AASHTO M252, TYPE S (ADS N-12 WTIB OR EQUIVALENT).
4. BOTTOM OF MH 5N TO BE TWO FEET DEEPER THAN LOWEST PIPE INVERT.
5. SUBMIT PLAN FOR MH 4N REMOVABLE OUTLET RESTRICTOR TO CONTRACTING OFFICER FOR APPROVAL.
6. BACKFILL 10-FEET TRENCH LENGTH TO WITHIN 2 FEET OF FINISH GRADE WITH CONTROLLED LOW STRENGTH FILL.
7. COORDINATE ACCESS FOR CONSTRUCTION OF SEWER TO EXISTING CB 1 WITH ADJACENT PROPERTY OWNER.
8. CONTRACTOR TO VERIFY WATER LINES HAVE BEEN ABANDONED PRIOR TO DISTURBING SOIL.
9. ESTABLISH BIORETENTION AREA VEGETATION FOR 3 GROWING SEASON MONTHS PRIOR TO DISCHARGING WATER FROM MH 5N TO THE BIORETENTION AREA.
10. LABEL MH 5N COVER "STORM".
11. PROVIDE RIP-RAP PER B / C-9.

NO.	DATE	REVISION	BY	APVD

DSGN EL CAVANAUGH | DR JIM HOLMQUIST | CHK JE STUBER | APVD MD MITTAG

REPAIR STORMWATER DRAINAGE AND DETENTION SYSTEMS

103D AIR CONTROL SQUADRON
PROJECT SKXJ072201
CONNECTICUT AIR NATIONAL GUARD
ORANGE, CONNECTICUT

CH2MHILL

CIVIL
SITE GRADING AND UTILITES PLAN AREA 2

VERIFY SCALE
BAR IS ONE INCH ON ORIGINAL DRAWING.
0 1"

DATE	JUNE 2008
PROJ	359024
DWG	C-4
SHEET	7

BID DOCUMENTS

FILENAME: dn05c142_359204.dgn PLOT DATE: 7/31/2008 PLOT TIME: 9:23:29 AM

MATCHLINE SEE DWG C-3

ADDITIVE BID ITEM #1
REGRADE SLOPE (1)

APPROXIMATE SLOPE
FAILURE CENTERLINE

DITCH

EARTH DITCH

SLOPED CHANNEL (2 / C-10)

REPAVE EAST ROADWAY,
FOR AN ENLARGED
PLAN, PROFILE, AND
CROSS SECTIONS,
SEE DWGS C-12 AND C-13

EARTH BERM

SLOPED
CHANNEL (2 / C-10)

REPLACE CURB AS
NEEDED FOR NEW CB

CB 6N,
DOUBLE INLET,
FOR RIM EL AND
INVTS, SEE TABLE
ON DWG C-8, TYP

2 - PRECAST CONC
WHEEL STOPS (3217-350)

OMIT 20 LF CURB
REPLACEMENT
FOR DRAINAGE

REGRADE TO DITCH, EXTEND
GEOTEXTILE 6 FEET BEYOND
TOE OF SLOPE (1 / C-10)

BITUM PARKING LOT

GRASS

DWY

GATE

E-BUR

MATCHLINE SEE DWG C-6

KEY PLAN

NTS

KEY NOTE:

1. ADDITIVE BID ITEM #1 REGRADE SLOPE: GRADE SLOPE THROUGH CUT OR FILL AS NEEDED TO MATCH ELEVATIONS 100 FEET NORTH FROM SLOPE FAILURE CENTERLINE. GRADE DITCH TO PRODUCE AN EVEN SLOPE AND MATCH CHANNEL CROSS SECTIONAL AREA BETWEEN 100 FEET UPSTREAM AND 200 FEET DOWNSTREAM OF SLOPE FAILURE CENTERLINE. PROVIDE TOPSOIL AND VEGETATION AS SPECIFIED. PROVIDE EROSION CONTROL MATTING OVER ENTIRE DISTURBED AREA. AFTER PLANTING, SOIL SHALL BE KEPT MOIST. SOIL SHALL BE WATERED ONCE PER DAY FOR 14 DAYS WHEN PRECIPITATION DOES NOT OCCUR TO PROMOTE GERMINATION AND EARLY SEEDLING ESTABLISHMENT. AFTER 14 DAYS, THE SOIL SHALL BE WATERED TWICE PER WEEK UNTIL A SATISFACTORY STAND OF VEGETATION IS ESTABLISHED.

0 20 40 60
Scale In Feet

NO.	DATE	REVISION	BY	APVD
1	07/08	REVISED ROADWAY PAVING AND SLOPED CHANNEL.	JMH	MDM

DSGN EL CAVANAUGH | DR JM HOLMQUIST | CHK JE STUBER | APVD MD MITTAG

REPAIR STORMWATER DRAINAGE AND DETENTION SYSTEMS

103D AIR CONTROL SQUADRON
PROJECT SKXJ072201
CONNECTICUT AIR NATIONAL GUARD
ORANGE, CONNECTICUT

CH2MHILL

CIVIL
SITE GRADING
AND UTILITES PLAN
AREA 3

VERIFY SCALE
BAR IS ONE INCH ON ORIGINAL DRAWING.
0 1"

DATE	JUNE 2008
PROJ	359024
DWG	C-5
SHEET	8

BID DOCUMENTS

FILENAME: dn05c143_359204.dgn PLOT DATE: 7/31/2008 PLOT TIME: 9:24:04 AM

MATCHLINE SEE DWG C-3

MATCHLINE SEE DWG C-5

MATCHLINE SEE DWG C-4

EXCAVATE DETENTION BASIN

SLOPED CHANNEL (1 / C-10) (2 / C-10)

CB 8N

PROTECT EXISTING WATER LINE

CB 9N

REPAVE WEST ROADWAY, FOR ENLARGED PLAN, PROFILE AND CROSS SECTIONS, SEE DWG C-13

WEST DETENTION BASIN

OVERFLOW LOCATION, DO NOT DISTURB VEGETATION

REPLACE 101 LF CURB

MATCH EXST GRADES, TYP

POROUS CONC PAVEMENT (3 / C-10)

UNDERDRAIN

PROTECT EXST CATCH BASIN, CONNECT UNDERDRAIN TO CATCH BASIN

INSTALL 3" REMOVABLE RESTRICTOR OUTLET, SUBMIT PLAN TO CONTRACTING OFFICER FOR APPROVAL

1 STORY CORR MET BLDG

BITUM PARKING LOT

GRASS

DWY

KEY NOTE:
1. CONTRACTOR TO VERIFY THAT WATER LINES HAVE BEEN ABANDONED PRIOR TO DISTURBING GROUND.

KEY PLAN
NTS

Scale In Feet: 0 20 40 60

NO.	DATE	DR	CHK	APVD
1	07/08	JM HOLMQUIST	JE STUBER	MD MITTAG

REVISION: CLARIFIED WATER LINE PROTECTION.

DSGN EL CAVANAUGH | BY JMH | APVD MDM

REPAIR STORMWATER DRAINAGE AND DETENTION SYSTEMS

103D AIR CONTROL SQUADRON
PROJECT SKXJ072201
CONNECTICUT AIR NATIONAL GUARD
ORANGE, CONNECTICUT

CH2MHILL

CIVIL
SITE GRADING AND UTILITES PLAN AREA 4

VERIFY SCALE
BAR IS ONE INCH ON ORIGINAL DRAWING.
0 1"

DATE	JUNE 2008
PROJ	359024
DWG	C-6
SHEET	9

BID DOCUMENTS

FILENAME: dn05c144_359204.dgn PLOT DATE: 7/31/2008 PLOT TIME: 9:24:36 AM

STRAW BALES IN DITCH
3125-170

STRAW BALES IN DITCH
3125-170

SILT FENCE
3125-165

SILT FENCE
3125-165

SILT FENCE 3125-165

PROVIDE CATCH BASIN INLET PROTECTION, TYP OF 13
3125-187

NOTES:

1. PROVIDE EROSION CONTROL AROUND ANY SOIL STOCKPILES CREATED FOR CONSTRUCTION STAGING.
2. INSTALL A CONSTRUCTION ENTRANCE TO PREVENT MATERIAL TRACKING ON PAVEMENT 3125-130.

N

0 40 80 120
Scale In Feet

NO.	DATE	REVISION	BY	APVD

DSGN EL CAVANAUGH | DR JIM HOLMQUIST | CHK JE STUBER | APVD MD MITTAG

REPAIR STORMWATER DRAINAGE AND DETENTION SYSTEMS

103D AIR CONTROL SQUADRON
PROJECT SKXJ072201
CONNECTICUT AIR NATIONAL GUARD
ORANGE, CONNECTICUT

CH2MHILL

CIVIL

EROSION CONTROL PLAN

VERIFY SCALE
BAR IS ONE INCH ON ORIGINAL DRAWING.
0 1"

DATE	JUNE 2008
PROJ	359024
DWG	C-7
SHEET	10

BID DOCUMENTS

FILENAME: dn05c161_359204.dgn PLOT DATE: 7/31/2008 PLOT TIME: 9:25:00 AM

EXISTING STORM SEWER STRUCTURES

STRUCT NO.	EL	DESCRIPTION	PIPE SIZE	NOTES
CB 1	142.35	INVT SW	15" ADS	TO CB 2
	142.40	INVT NW	15" ADS	TO OUTFALL IN MAFIA BLOCK DETENTION BASIN, EL=141.05
	146.63	RIM		
CB 2	143.10	INVT NE	15" ADS	TO CB 1
	143.10	INVT SW	?	BEYOND SURVEY LIMITS
	146.29	RIM		DOUBLE CATCH BASIN
CB 3	162.98	SUMP		
	164.43	INVT S	24" RCP	TO MH 7
	164.43	INVT W	24" RCP	TO CB 4
	169.38	RIM		
CB 4	161.23	SUMP		
	164.88	INVT E	24" RCP	TO 9.5'x6 OUTFALL IN EAST DETENTION BASIN, EL=165.50
	164.93	INVT W	24" RCP	TO CB 3
	164.98	INVT SE	12" RCP	TO CB 5
	169.33	RIM		
CB 5	163.60	SUMP		
	165.70	INVT NW	12" RCP	TO CB 4
	171.82	RIM		
CB 6	146.3±	SUMP		SILTED
	152.93	RIM		
MH 7	163.09	SUMP		
	163.64	INVT SW	24" RCP	TO MH 11
	163.84	INVT NE	24" RCP	TO CB 3
	168.84	RIM		
CB 8	163.50	SUMP		
	165.20	INVT SW	18" RCP	TO MH 11
	165.30	INVT SE	15" RCP	TO CB 14
	168.15	INVT NE	15" RCP	TO CB 9
	173.41	RIM		
CB 9	169.45	SUMP		
	171.00	INVT SW	15" RCP	TO CB 8
	171.05	INVT NE	12" RCP	TO CB 10
	173.45	RIM		
CB 10	169.45	SUMP		
	171.10	INVT SW	12" RCP	
	175.32	RIM		
MH 11	162.65	SUMP		
	162.90	INVT SW	36" RCP	TO 36" RCCE OUTFALL IN WEST DETENTION BASIN, EL=163.10
	163.00	INVT NE	24" RCP	TO MH 7
	163.8±	INVT E (REC'D)	18" RCP	TO CB 8
	165.4±	INVT SE (REC'D)	12" RCP	TO CB 12
	169.65	RIM		
CB 12	165.50	SUMP		
	165.90	INVT NW	12" RCP	TO MH 11
	169.97	RIM		
CB 14	201.55	SUMP		
	201.95	INVT S	18" RCP	TO CB 18
	202.00	INVT N	?	BEYOND SURVEY LIMITS
	210.25	RIM		
CB 15	168.45	SUMP		
	169.00	INVT NW	15" RCP	TO CB 8
	169.05	INVT SE	15" RCP	TO CB 22
	172.25	INVT NE	15" RCP	TO CB 16
	178.46	RIM		
CB 16	170.70	SUMP		
	172.30	INVT SW	15" RCP	TO CB 15
	172.80	INVT NE	12" RCP	TO CB 13
	178.32	RIM		
MH 17	176.65	SUMP		
	179.20	INVT N	12" RCP	TO 24" RCCE OUTFALL IN EAST DETENTION BASIN, EL=179.16
	179.50	INVT SE	18" RCP	TO 18" RCCE OUTFALL IN EARTH DITCH, EL=183.40
	179.25	INVT E	18" RCP	TO CB 18
	185.43	RIM		
CB 18	185.90	SUMP		
	187.55	INVT W	18" RCP	TO MH 17
	189.70	INVT N	18" RCP	TO CB 14
	195.39	RIM		
CB 19	165.20	SUMP		
	166.05	INVT N	12" RCP	TO CB 21
	166.10	INVT S	12" RCP	TO CB 20
	172.07	RIM		
CB 20	164.35	SUMP		
	166.15	INVT N	12" RCP	TO CB 19
	166.25	INVT S	12" RCP	TO CB 26
	172.26	RIM		
CB 21	164.55	SUMP		
	165.65	INVT NW	12" RCP	TO 12" RCCE OUTFALL IN WEST DETENTION BASIN, EL=165.23
	165.70	INVT S	12" RCP	TO CB 19
	170.27	RIM		
CB 22	157.20	SUMP		
	160.45	INVT W	12" RCP	TO 12" RCCE OUTFALL IN WEST DETENTION BASIN, EL=160.01
	162.80	RIM		
CB 23	172.45	SUMP		
	174.10	INVT N	15" RCP	TO CB 15
	174.35	INVT E	15" RCP	TO CB 24
	183.79	RIM		
CB 24	172.85	SUMP		
	174.45	INVT W	15" RCP	TO CB 23
	174.70	INVT S	15" RCP	TO MH 28
	174.70	INVT NE	12" RCP	TO CB 25
	183.19	RIM		

EXISTING STORM SEWER STRUCTURES (CONT'D)

STRUCT NO.	EL	DESCRIPTION	PIPE SIZE	NOTES
CB 25	176.95	SUMP		
	178.05	INVT SW	12" RCP	TO CB 24
	182.86	RIM		
CB 26	166.95	SUMP		
	168.60	INVT NW	12" RCP	TO CB 20
	169.05	INVT SW	12" RCP	TO CB 27
	176.20	RIM		
CB 27	168.40	SUMP		
	170.30	INVT NW	12" RCP	TO CB 26
	176.23	RIM		
MH 28	177.50	INVT N	15" RCP	TO CB 24
	177.65	INVT E	12" DIP	TO MH 29
	179.75	INVT S	12" RCP	BEYOND SURVEY LIMITS
	186.82	RIM		
MH 29	177.60	SUMP		
	181.50	INVT W	12" DIP	TO MH 28
	186.71	RIM		
MH 30	N/A	SUMP		SILTED
	N/A	INVT E	12" RCP	RECESSED, TO CB 31
	186.47	RIM		
CB 31	179.55	SUMP		
	181.75	INVT W	12" RCP	TO MH 30
	185.93	RIM		
CB 32	186.32	SUMP		
	189.52	INVT NW	18" RCP	TO 18" RCCE OUTFALL IN EARTH DITCH, EL=189.21
	193.47	INVT E	?	BEYOND SURVEY LIMITS
	199.62	RIM		

EXISTING SANITARY SEWER STRUCTURES

STRUCT NO.	EL	DESCRIPTION	PIPE SIZE	NOTES
S-1	136.45	INVT CL	8" PVC	TO MH S-2
	141.76	RIM		
S-2	148.95	INVT CL	8" PVC	TO MH S-1 AND S-3
	153.15	RIM		
S-3	151.45	INVT CL	8" PVC	TO MH S-2 AND S-5
	151.95	INVT NE	6" PVC	TO MH S-4
	154.89	RIM		
S-4	155.45	INVT SW	6" PVC	TO MH S-3
	161.25	INVT NE	4" PVC	LATERAL TO GUARD HOUSE
	169.85	RIM		
S-5	159.90	INVT NW	8" PVC	TO MH S-3
	161.40	INVT NE	6" PVC	TO MH S-6
	160.55	INVT SE	4" PVC	LATERAL TO BUILDING (IN SW CORNER OF PROPERTY)
	164.95	RIM		
S-6	162.71	INVT SW	6" PVC	TO MH S-5
	166.75	INVT NE	6" PVC	TO MH S-7
	176.46	RIM		
S-7	170.10	INVT CL	6" PVC	TO MH S-6 AND S-8
	181.93	RIM		
S-8	172.20	INVT CL	6" PVC	TO MH S-7 AND S-9
	183.24	RIM		
S-9	174.20	INVT SW	6" PVC	TO MH S-8
	179.70	INVT NE	6" PVC	TO MH S-10
	188.80	RIM		
S-10	181.65	INVT SW	6" PVC	TO MH S-9
	183.15	INVT N	6" PVC	TO MH S-11
	193.26	RIM		
S-11	214.07	RIM		COVER BOLTED, NO ACCESS TO INVERTS

PROPOSED STORM SEWER STRUCTURES

STRUCT NO.	NORTHING	EASTING	ELEVATION	DESCRIPTION	PIPE SIZE	NOTES
CB 2N						DOUBLE INLET
(N)	158352.01	533095.92	195.47	RIM		NORTH INLET
(S)	158344.94	533094.34	194.75	RIM		SOUTH INLET
			184.50	INVT CL	18" RCP	TO CB 3N AND MH 17, VERIFY EXISTING PIPE INVERT ELEVATION IS CONSISTENT WITH PROPOSED INVERT AND SUMP
			183.00	SUMP		
CB 3N						DOUBLE INLET (REPLACES CB 18)
(N)	158351.17	533120.77	195.57	RIM		NORTH INLET
(S)	158343.96	533120.24	194.98	RIM		SOUTH INLET
			187.55	INVT W	18" RCP	TO CB 2N
			189.70	INVT NW	18" RCP	TO CB 14
			185.90	SUMP		
MH 4N	158756.56	532629.61	153.00	RIM		MANHOLE WITH BEEHIVE INLET
			144.50	INVT NW	12" HDPE	NEW PIPE TO EXISTING CB 1
MH 5N	158636.29	532674.08	160.61	RIM		
			158.20	INVT S	12" HDPE	TO POND OUTLET IN WEST
			150.35	INVT N	12" HDPE	TO OUTFALL IN BIORETENTION
			148.35	SUMP		
CB 6N						DOUBLE INLET
(E)	157985.66	533172.96	200.26	RIM		EAST INLET
(W)	157985.61	533165.72	199.71	RIM		WEST INLET
			193.47	INVT E	—	BEYOND SURVEY LIMITS
			189.52	INVT NW	18" RCP	TO 18" RCCE OUTFALL IN EARTH DITCH
			186.32	SUMP		DOUBLE INLET, REPLACES CB 32
CB 8N						DOUBLE INLET, REPLACES CB 19
(E)	158268.34	532815.62	172.91	RIM		EAST INLET
(W)	158266.52	532808.61	172.75	RIM		WEST INLET
			166.10	INVT S	12" RCP	TO CB 20
			166.05	INVT N	12" RCP	TO CB 21
			165.20	SUMP		
CB 9N	158241.62	532815.44	172.58	RIM		
			166.25	INVT S	12" RCP	TO CB 26
			166.15	INVT N	12" RCP	TO CB 8N
			164.35	SUMP		REPLACES CB 20

NOTE:

1. CATCH BASIN COORDINATES ARE BASED ON LOCATION OF COVER AT FACE OF CURB AT CENTERLINE. STORM SEWER MANHOLES COORDINATED ARE BASED ON LOCATION OF CENTER OF STRUCTURE.

NO.	DATE	REVISION	CHK	APVD
1	07/08	REVISED CATCH BASINS 2N, 3N, 8N AND 9N PER ROADWAY PAVING REVISION	JE STUBER	MD MITTAG

DSGN EL CAVANAUGH DR JIM HOLMQUIST BY JMH APVD MDM

REPAIR STORMWATER DRAINAGE AND DETENTION SYSTEMS

103D AIR CONTROL SQUADRON
PROJECT SKXJ072201
CONNECTICUT AIR NATIONAL GUARD
ORANGE, CONNECTICUT

CH2MHILL

CIVIL

SITE SEWER STRUCTURE TABLES

VERIFY SCALE
BAR IS ONE INCH ON ORIGINAL DRAWING.
0 1"

DATE	JUNE 2008
PROJ	359024
DWG	C-8
SHEET	11

BID DOCUMENTS

FILENAME: dn05c601_359204.dgn PLOT DATE: 7/31/2008 PLOT TIME: 9:25:07 AM

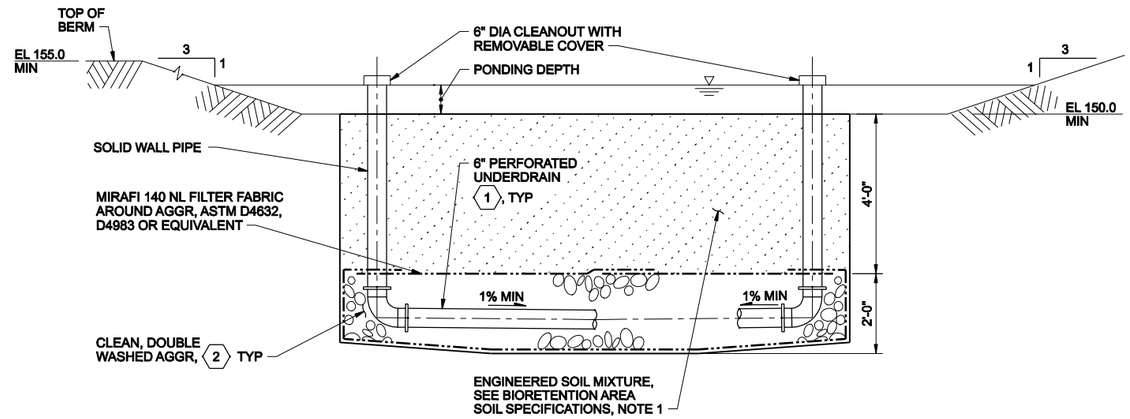

A SECTION
NTS

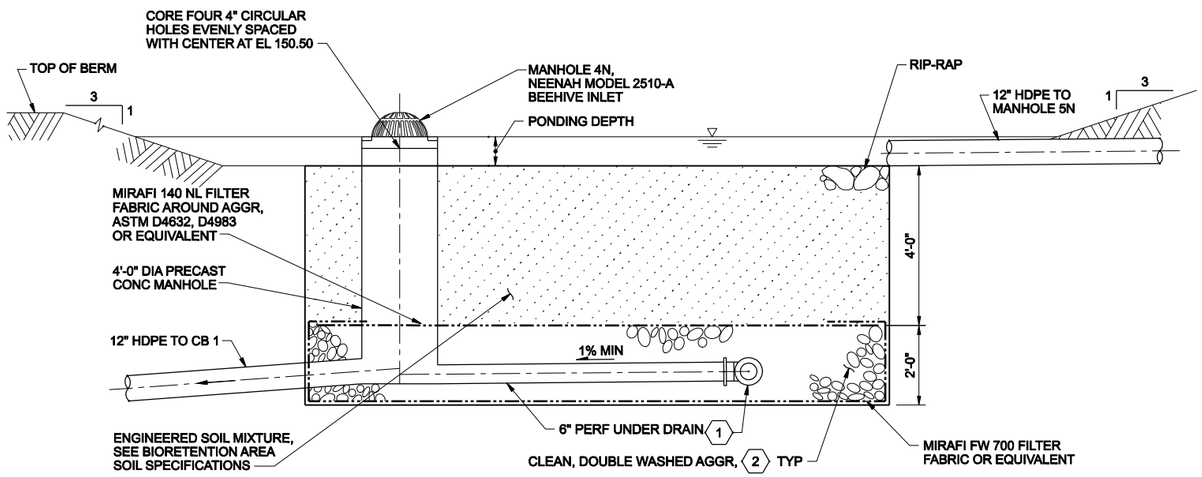

B SECTION
NTS

NOTES:

1. UNDERDRAIN HDPE AASHTO M252 CLASS II.
2. MINIMUM 3" OF CONNDOT NUMBER 3 CRUSHED AGGREGATE (CONNDOT SPECIFICATION M.01) OVER PIPE.

BIORETENTION NOTES:

SOIL SPECIFICATIONS

1. THE BIORETENTION AREA CONTAIN A PLANTING SOIL MIXTURE AS SHOWN BELOW. TOPSOIL SHALL BE SANDY LOAM OR LOAMY SAND OF UNIFORM COMPOSITION, CONTAINING NO MORE THAN 5% CLAY, FREE OF STONES, STUMPS, ROOTS, OR SIMILAR OBJECTS GREATER THAN ONE (1") INCH, BRUSH, OR ANY OTHER MATERIAL OR SUBSTANCE WHICH MAY BE HARMFUL TO PLANT GROWTH, OR MAINTENANCE. THE TOPSOIL SHALL BE FREE OR PLANT PARTS, BERMUDA GRASS, QUICK GRASS, JOHNSON GRASS, MUGWORTH, NUTSEDGE, POISON IVY, CANADIAN THISTLE OR OTHERS AS SPECIFIED. IT SHALL NOT CONTAIN TOXIC SUBSTANCES HARMFUL TO PLANT GROWTH.

BIORETENTION - ENGINEERED SOIL MIXTURE

ITEM	COMPOSITION BY VOLUME
TOPSOIL	20%
LEAF COMPOST (FULLY COMPOSTED, NOT PARTIALLY ROOTED LEAVES)	30%
SAND	50%

THE ENGINEERED SOIL SHALL BE MIXED IN BATCHES TO ACHIEVE A HOMOGENEOUS MIX PRIOR TO PLACEMENT IN THE BIORETENTION AREA .

2. MULCH
A MULCH LAYER SHALL BE PLACED ON TOP OF THE PLANTING SOIL. AN ACCEPTABLE MULCH LAYER SHALL INCLUDE SHREDDED HARDWOOD OR SHREDDED WOOD CHIPS OR OTHER APPROVED EQUAL.

3. SAND
THE SAND FOR THE BIORETENTION AREA, SHALL BE ASTM C-33 CONCRETE SAND AND FREE OF DELETERIOUS MATERIAL.

4. COMPACTION
SOIL SHALL BE PLACED IN LIFTS LESS THAN 18 INCHES AND LIGHTLY COMPACTED (MINIMAL COMPACTIVE EFFORT) BY TAMPING WITH A BUCKET FROM A DOZER OR A BACKHOE. DRIVING ON BIORETENTION AREA WITH WHEELED EQUIPMENT IS NOT ALLOWED.

PLANT SELECTION

PLANT VARIETY NOTES:

1. PLANTS SHALL INCLUDE TREES, SHRUBS AND HERBACEOUS GROUND COVER.
2. SHRUB-TO-TREE RATIO SHALL BE 3:1.
3. MINIMUM THREE OF THE FOLLOWING SPECIES SHALL BE USED FOR EACH CATEGORY:

PLANTS RECOMMENDED	
BIORETENTION AREA	
TREES/SHRUBS (SCIENTIFIC NAME)	HERBACEOUS SPECIES (SCIENTIFIC NAME)
RED MAPLE (ACER RUBRUM)	SWITCHGRASS (PANICUM VIRGATUM)
RIVER BIRCH (BETULA NIGRA)	WILD-RYE (ELYMUS)
BLACK WILLOW (SALIZ NIGRA)	REDTOP (AGROSTIS GIGANTEA)
COMMON SPICE BUSH (LINDERA)	FOX SEDGE (CAREX VULPINOIDEA)
COMMON WINTERBERRY (ILEX VERTICILLATA)	SOFT RUSH (JUNCUS EFFUSUS)

PLANT LAYOUT AND INSTALLATION

1. PLANT LAYOUT
   A. WOODY PLANT MATERIAL SHOULD NOT BE PLACED AT INFLOW LOCATIONS.
   B. TREES SHOULD BE PLANTED PRIMARILY ON THE PERIMETER OF THE BIORETENTION AREA.
   C. HERBACEOUS VEGETATION TO EXTEND MIN 6'-0" UP SIDE SLOPE.
2. PLANT DENSITY
   A. AVERAGE TREE SPACING = 12 FEET.
   B. AVERAGE SHRUB SPACING = 8 FEET.
   C. AVERAGE TOTAL HERBACEOUS SPECIES DENSITY = SEEDING AS SPECIFIED.
3. TIME OF PLANTING
   A. BALLED, BURLAPPED AND CONTAINERIZED TREES AND SHRUBS SHOULD BE PLANTED BETWEEN MARCH 15 THROUGH JUNE 10.
   B. HERBACEOUS SPECIES CAN FOLLOW TREE AND SHRUB PLANTING DATES.
4. WATERING
   A. AFTER PLANTING, SOIL SHALL BE KEPT MOIST. IF PRECIPITATION IS NOT SUFFICIENT TO MAINTAIN MOIST SOIL CONDITIONS, SOIL SHALL BE WATERED UNIFORMLY ONCE PER DAY FOR 14 DAYS TO MAINTAIN MOIST SOIL CONDITIONS TO PROMOTE GERMINATION AND EARLY SEEDING ESTABLISHMENT. AFTER 14 DAYS, THE SOIL SHALL BE WATERED TWICE PER WEEK. THE FREQUENCY OF WATERING SHALL BE ADJUSTED ACCORDING TO WEATHER AND SOIL CONDITIONS.

NO.	DATE	REVISION	BY	APVD

DSGN EL CAVANAUGH | DR JIM HOLMQUIST | CHK JE STUBER | APVD MD MITTAG

REPAIR STORMWATER DRAINAGE AND DETENTION SYSTEMS

103D AIR CONTROL SQUADRON
PROJECT SKXJ072201
CONNECTICUT AIR NATIONAL GUARD
ORANGE, CONNECTICUT

CH2MHILL

CIVIL
BIORETENTION SECTIONS AND NOTES

VERIFY SCALE
BAR IS ONE INCH ON ORIGINAL DRAWING.
0 1"

DATE	JUNE 2008
PROJ	359024
DWG	C-9
SHEET	12

BID DOCUMENTS

FILENAME: dn05c301_359204.dgn PLOT DATE: 7/31/2008 PLOT TIME: 9:25:17 AM

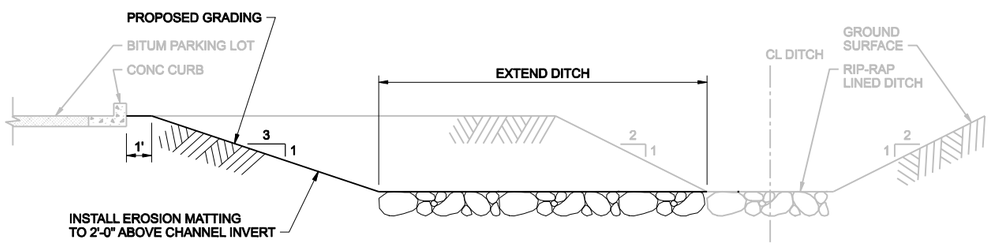

RIP-RAP DITCH

A SECTION
NTS

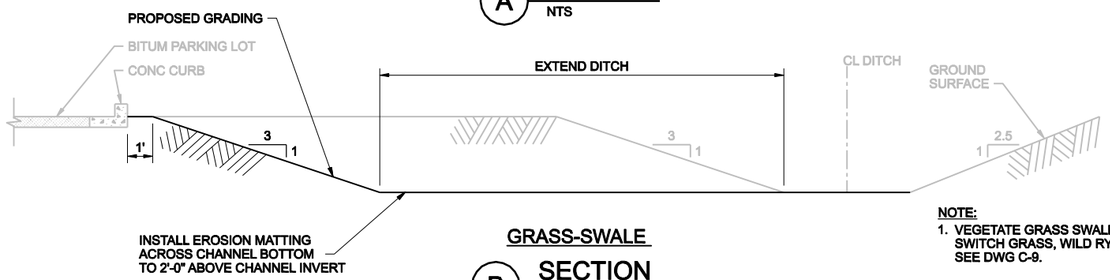

GRASS-SWALE

B SECTION
NTS

NOTE:
1. VEGETATE GRASS SWALE BOTTOM WITH SWITCH GRASS, WILD RYE, AND REDTOP SEE DWG C-9.

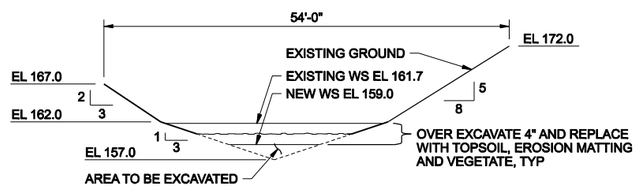

WEST POND EXCAVATION

C SECTION
NTS

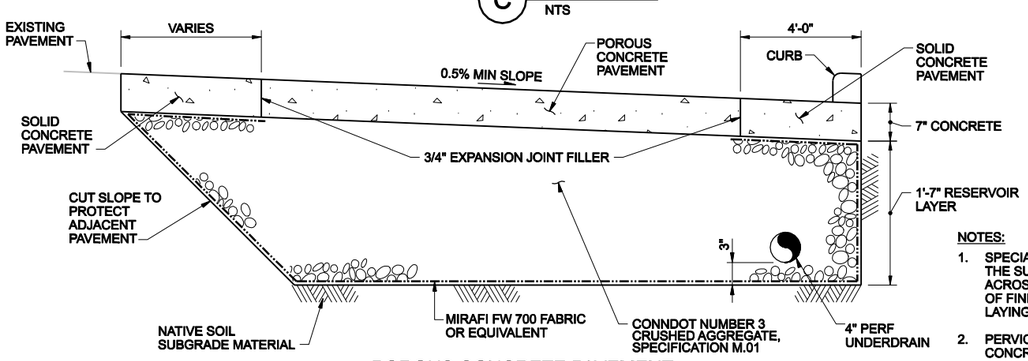

POROUS CONCRETE PAVEMENT

D SECTION
NTS

NOTES:

1. SPECIAL CARE SHALL BE TAKEN TO AVOID COMPACTING THE SUBGRADE. AVOID RUNNING HEAVY EQUIPMENT ACROSS THE SUBGRADE. REMOVE ANY ACCUMULATION OF FINES FROM SURFACE OF SUBBASE PRIOR TO THE LAYING OF THE BASE COURSE.
2. PERVIOUS PAVEMENT SHALL CONSIST OF OPEN GRADED CONCRETE.
3. GREAT CARE NEEDED IN THE MIXING, PLACEMENT AND CURING OF THE PERVIOUS CONCRETE. SEVERAL TEST PANELS RECOMMENDED. SEE SPECIFICATIONS.
4. SEAMS FOR GEOTEXTILE (MIRAFI FW 700 OR EQUIVALENT) SHALL BE SEWN WITH A 2'-0" MINIMUM OVERLAP.
5. UNDERDRAIN HDPE AASHTO M252 CLASS II.
6. CONCRETE PAVEMENT SHALL BE AS SPECIFIED IN CONNDOT SPECIFICATIONS FOR ROADS, BRIDGES, AND INCIDENTAL CONSTRUCTION FORM 846, SECTION 4.01, CONCRETE PAVEMENT.
7. PROVIDE EXPANSION JOINT MATERIAL BETWEEN POROUS CONCRETE AND CONCRETE PAVEMENT TO THE THICKNESS AND HEIGHT SHOWN. EXPANSION FILLER SHALL CONFORM TO AASHTO M153 OR AASTO M213.

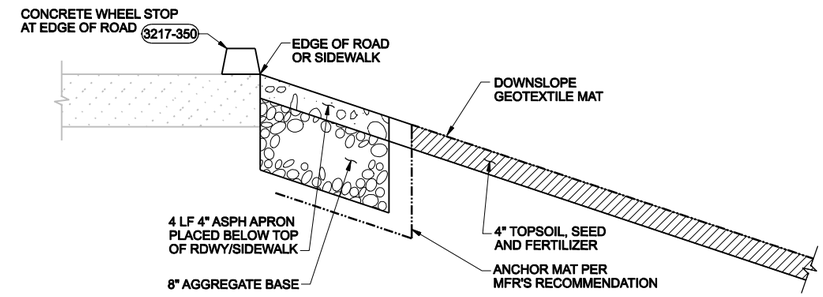

CROSS SECTION

1 SLOPED CHANNEL PROTECTION DETAIL
NTS

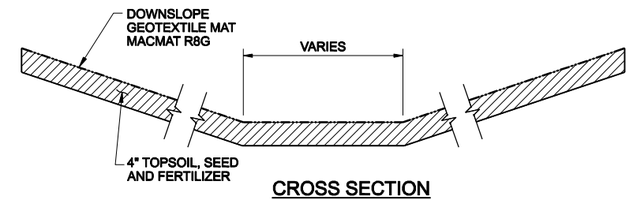

CROSS SECTION

2 SLOPED CHANNEL DETAIL
NTS

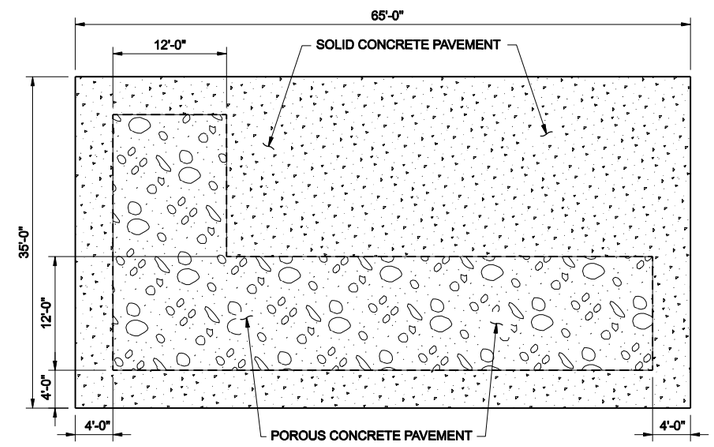

ENLARGED PLAN

3 PAVEMENT DETAIL
1/8"=1'-0"

NO.	DATE	REVISION	BY	APVD
1	07/08	REVISED SLOPED CHANNEL PROTECTION DETAIL 1	JMH	MDM

DSGN EL CAVANAUGH | DR DA BROWN | CHK JE STUBER | APVD MD MITTAG

REPAIR STORMWATER DRAINAGE AND DETENTION SYSTEMS

103D AIR CONTROL SQUADRON
PROJECT SKXJ072201
CONNECTICUT AIR NATIONAL GUARD
ORANGE, CONNECTICUT

CH2MHILL

CIVIL

SECTIONS AND DETAILS

VERIFY SCALE
BAR IS ONE INCH ON ORIGINAL DRAWING.
0 1"

DATE	JUNE 2008
PROJ	359024
DWG	C-10
SHEET	13

BID DOCUMENTS

FILENAME: dn05c302_359204.dgn PLOT DATE: 7/31/2008 PLOT TIME: 9:25:27 AM

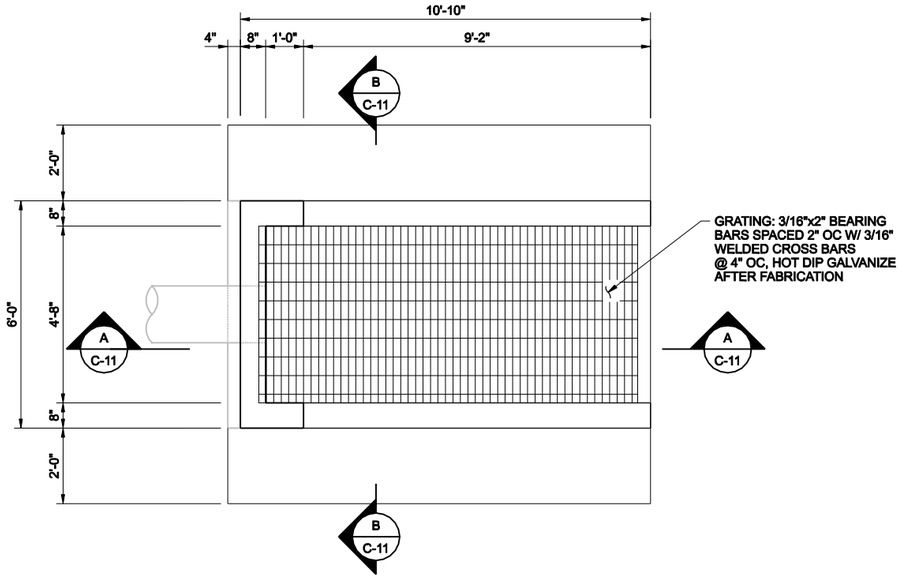

1 EAST DETENTION BASIN OUTLET STRUCTURAL DETAIL
1/2"=1'0"

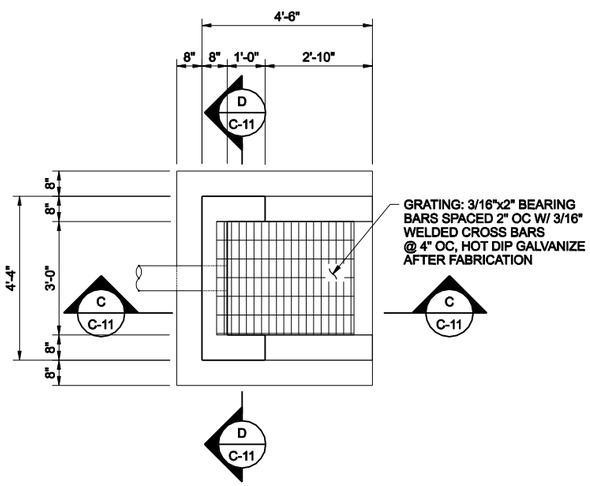

2 WEST DETENTION BASIN OUTLET STRUCTURAL DETAIL
1/2"=1'0"

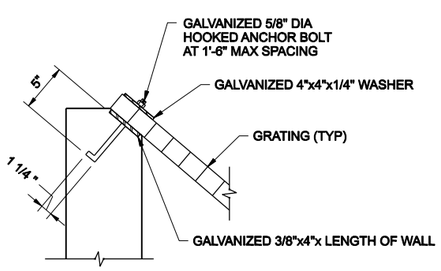

3 DETAIL
1/2"=1'-0"

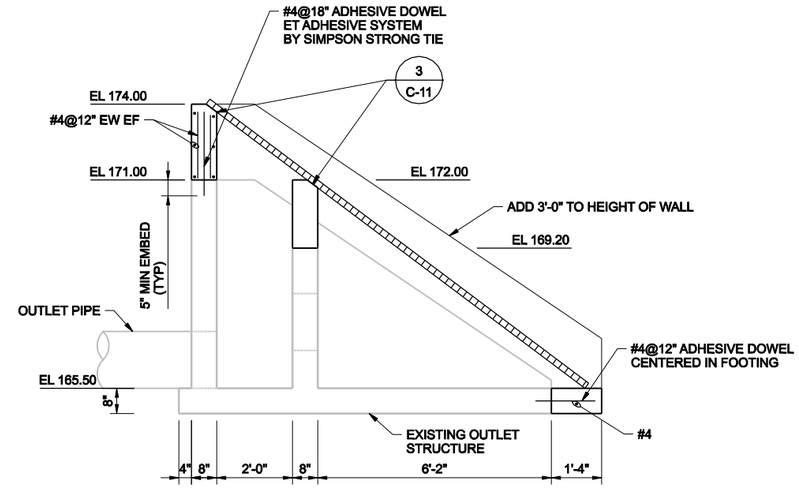

A SECTION
1/2"=1'-0"

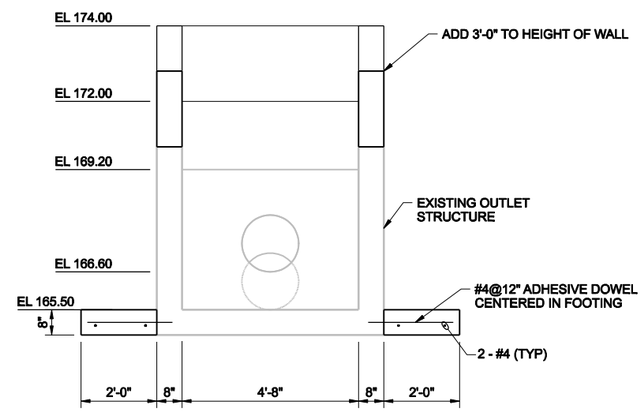

B SECTION
1/2"=1'-0"

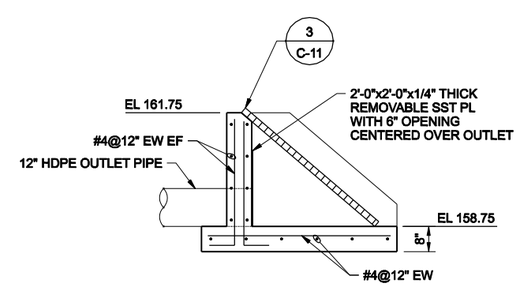

C SECTION
1/2"=1'-0"

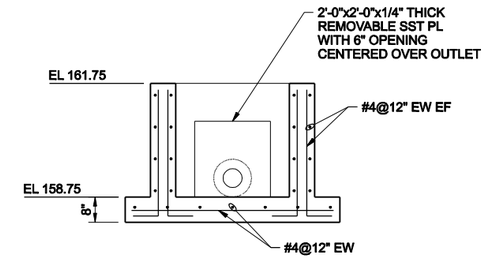

D SECTION
1/2"=1'-0"

NOTES:

1. FIELD VERIFY ALL EXISTING DIMENSIONS AND ELEVATIONS.
2. STRUCTURAL CONCRETE: 4,000 PSI
   REINFORCING BARS: ASTM A 615
3. SUBMIT PLAN FOR WEST POND REMOVABLE STAINLESS STEEL PLATE TO CONTRACTING OFFICER FOR APPROVAL.
4. STORAGE SUMMARY FOR KEY ELEMENTS OF ORANGE, CONNECTICUT AIR NATIONAL GUARD DRAINAGE SYSTEM (FOR INFORMATIONAL PURPOSES ONLY):

EAST DETENTION BASIN DITCH STORAGE:	5,000 CUBIC FEET
EAST DETENTION BASIN STORAGE:	33,000 CUBIC FEET
WEST DETENTION BASIN STORAGE:	54,000 CUBIC FEET
BIORETENTION STORAGE:	24,000 CUBIC FEET

NO.	DATE	REVISION	BY	APVD
1	07/08	ADDED REBAR SYMBOL TO SECTION B.	JMH	MDM

DSGN DR LANGE | DR P RAYMONT | CHK JE STUBER | APVD MD MITTAG

REPAIR STORMWATER DRAINAGE AND DETENTION SYSTEMS

103D AIR CONTROL SQUADRON
PROJECT SKXJ072201
CONNECTICUT AIR NATIONAL GUARD
ORANGE, CONNECTICUT

CH2MHILL

CIVIL
EAST AND WEST DETENTION BASIN OUTLET STRUCTURES, DETAILS AND SECTIONS

VERIFY SCALE
BAR IS ONE INCH ON ORIGINAL DRAWING.
0 1"

DATE	JUNE 2008
PROJ	359024
DWG	C-11
SHEET	14

BID DOCUMENTS

FILENAME: dn05c304_359204.dgn PLOT DATE: 7/31/2008 PLOT TIME: 9:26:01 AM

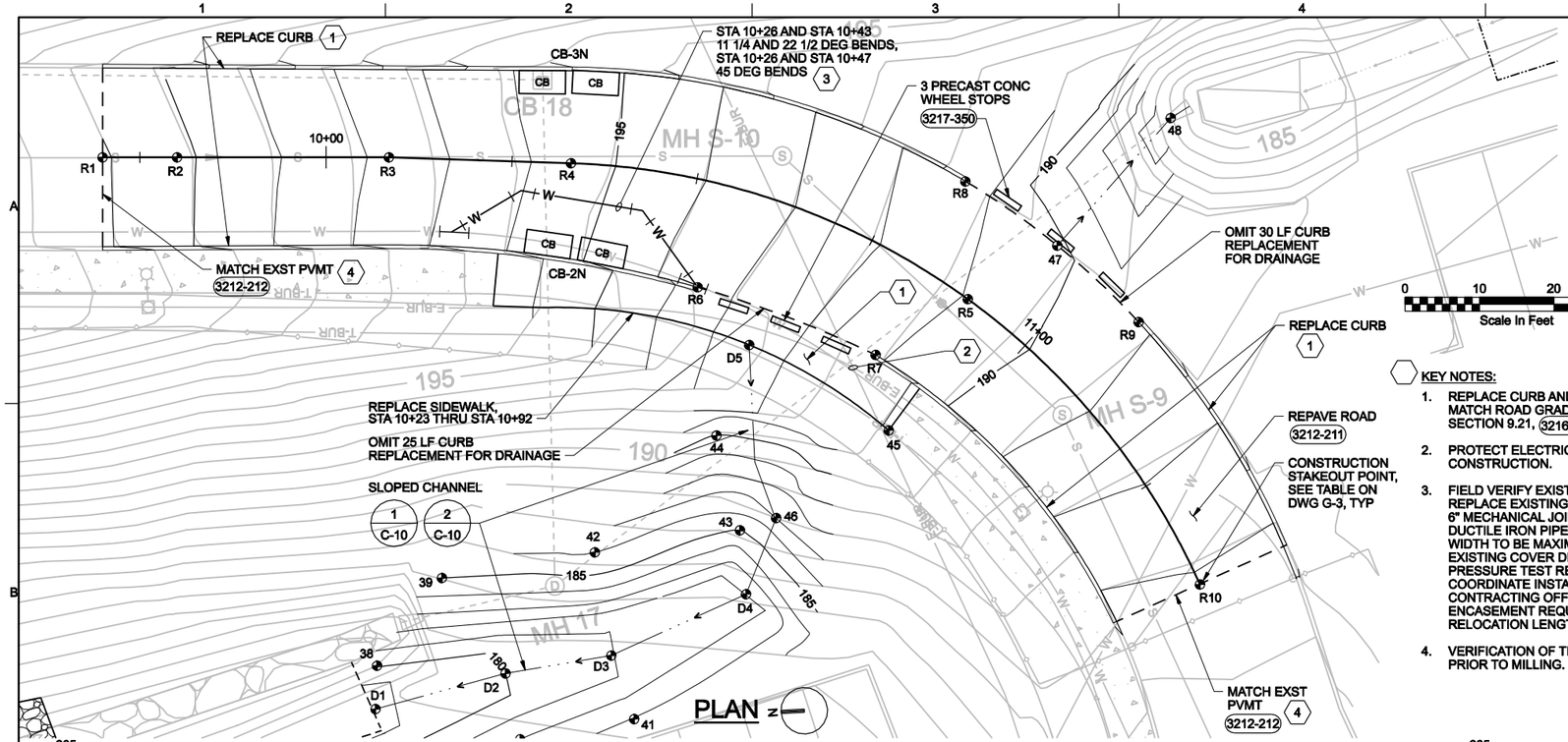

0 10 20 30
Scale In Feet

KEY NOTES:

1. REPLACE CURB AND 4" CONCRETE SIDEWALK TO MATCH ROAD GRADES PER CONNDOT SPECIFICATION SECTION 9.21, 3216-335 AND 3213-221 .
2. PROTECT ELECTRICAL SYSTEM DURING CONSTRUCTION.
3. FIELD VERIFY EXISTING WATERMAIN LOCATION. REPLACE EXISTING 6" DUCTILE IRON PIPE WITH 6" MECHANICAL JOINT CLASS 50 CEMENT-LINED DUCTILE IRON PIPE ANSI / AWWA C151. TRENCH WIDTH TO BE MAXIMUM OF FIVE FEET. MATCH EXISTING COVER DEPTH OF PIPE. DISINFECT AND PRESSURE TEST REQUIRED PER ANSI / AWWA C651-999. COORDINATE INSTALLATION SCHEDULE WITH CONTRACTING OFFICER. 3000 PSI CONCRETE ENCASEMENT REQUIRED ALONG ENTIRE RELOCATION LENGTH, SEE 3123-111 .
4. VERIFICATION OF TIE-IN ELEVATIONS REQUIRED PRIOR TO MILLING.

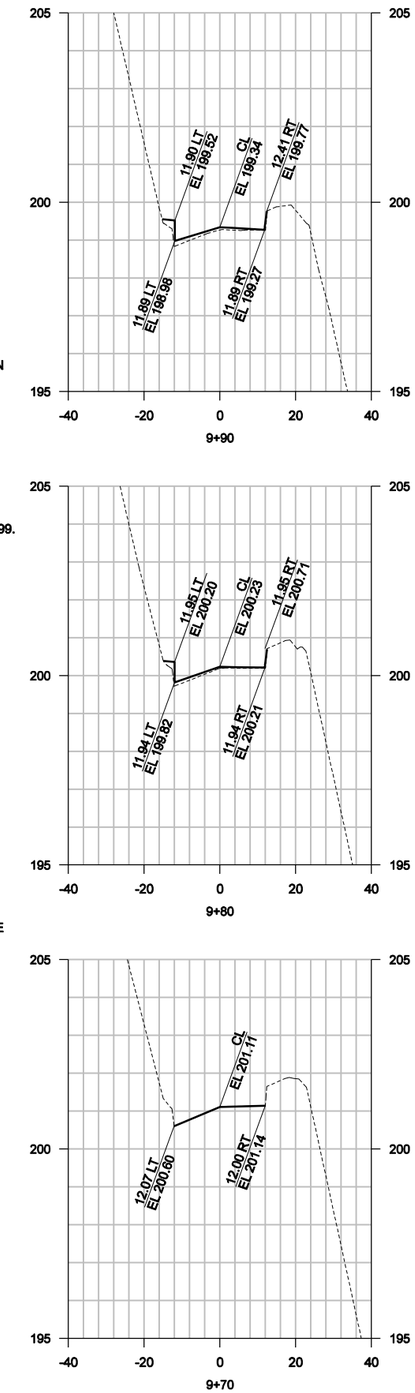

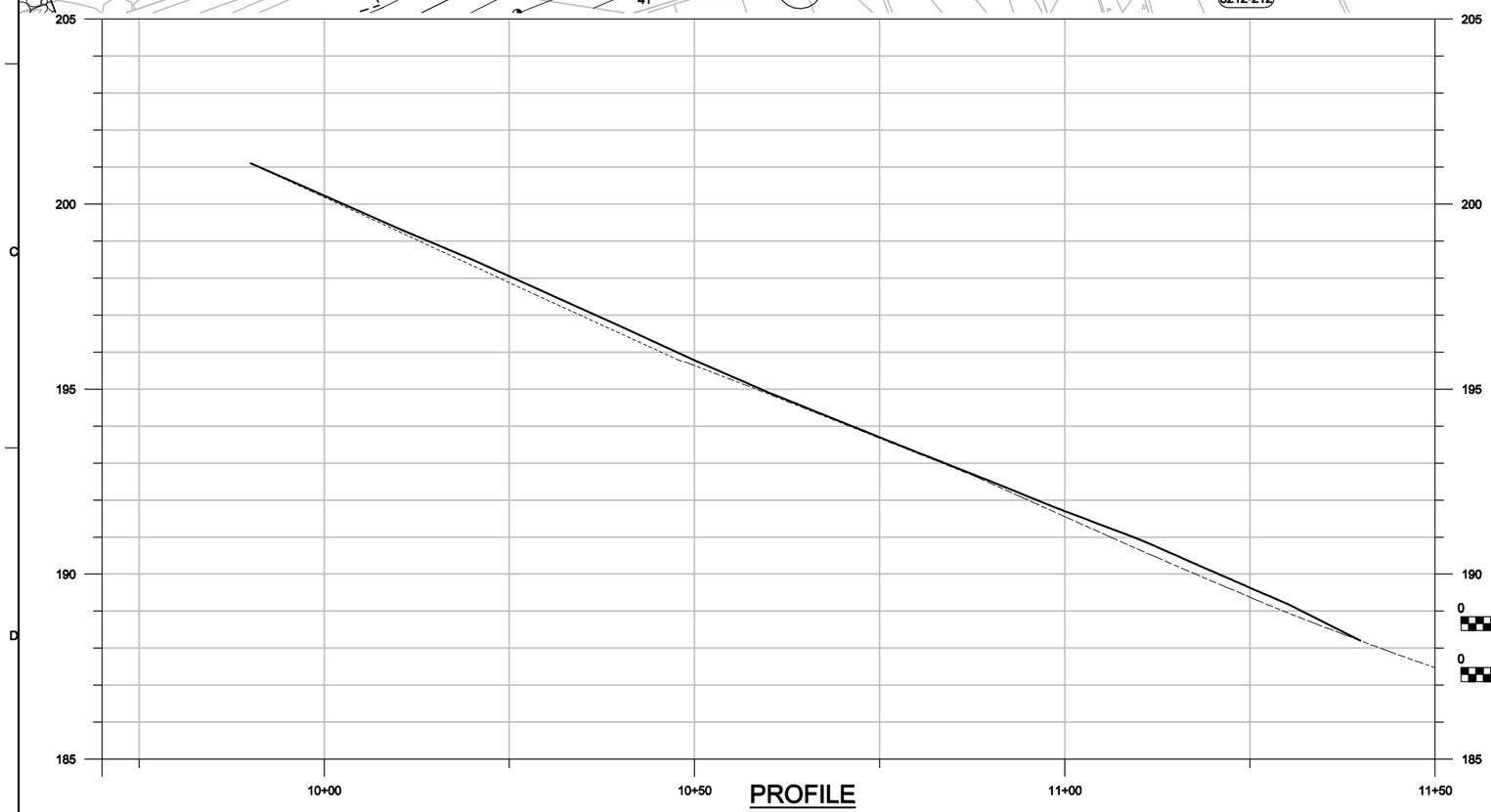

LEGEND

PROPOSED GRADE

EXISTING GRADE

0 2 4 6
VERTICAL SCALE

0 10 20 30
HORIZONTAL SCALE

CROSS SECTIONS
STATION 9+70 TO 9+90

0 2 4 6
VERTICAL SCALE

0 20 40 60
HORIZONTAL SCALE

NO.	DATE	REVISION	CHK	APVD	BY	APVD
1	07/08	REVISED ROADWAY PLAN, PROFILE & CROSS SECTIONS.	JIM	MDM	JMH	MD MITTAG

DSGN MW HOLMQUIST DR JM HOLMQUIST CHK JE STUBER APVD

REPAIR STORMWATER DRAINAGE AND DETENTION SYSTEMS

PROJECT SKXJ072201
ORANGE, CONNECTICUT
CONNECTICUT AIR NATIONAL GUARD
103D AIR CONTROL SQUADRON

CH2MHILL

CIVIL
EAST ROADWAY
PLAN AND PROFILE
AND CROSS SECTIONS

VERIFY SCALE
BAR IS ONE INCH ON ORIGINAL DRAWING.
0 1"

DATE	JUNE 2008
PROJ	359024
DWG	C-12
SHEET	15

BID DOCUMENTS

FILENAME: dn05c471_359204.dgn PLOT DATE: 8/1/2008 PLOT TIME: 3:04:20 PM

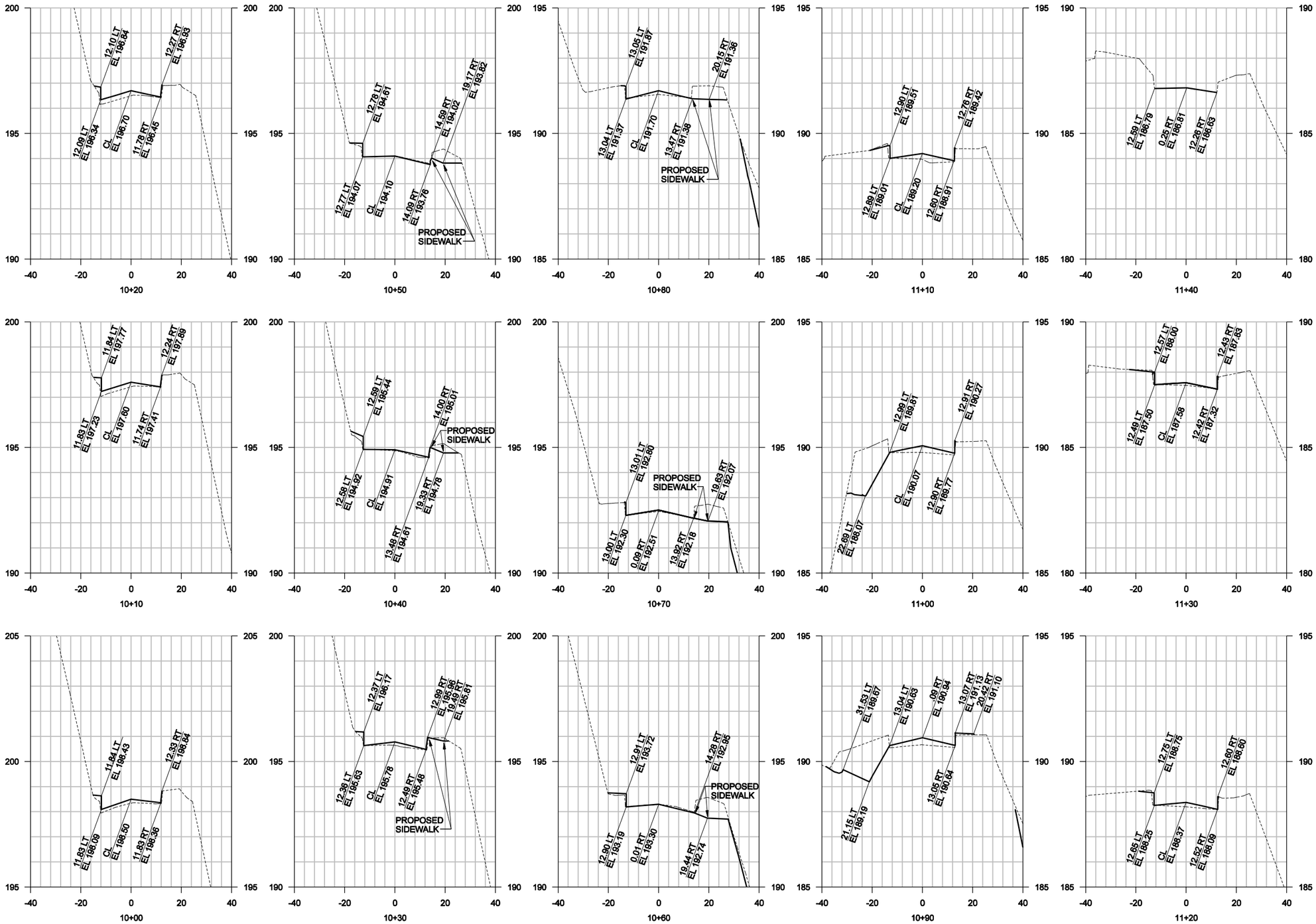

CROSS SECTIONS

STATION 10+30 TO 11+60

LEGEND

PROPOSED GRADE

EXISTING GRADE

VERTICAL SCALE 0 2 4 6

HORIZONTAL SCALE 0 20 40 60

NO.	DATE	REVISION	BY	APVD
1	07/08	REVISED CROSS SECTIONS.	JMH	MDM

DSGN MW HOLMQUIST DR JM HOLMQUIST CHK JE STUBER APVD MD MITTAG

REPAIR STORMWATER DRAINAGE AND DETENTION SYSTEMS

PROJECT SKXJ072201
ORANGE, CONNECTICUT
CONNECTICUT AIR NATIONAL GUARD
103D AIR CONTROL SQUADRON

CH2MHILL

CIVIL

EAST ROADWAY CROSS SECTIONS

VERIFY SCALE

BAR IS ONE INCH ON ORIGINAL DRAWING. 0 1"

DATE	JUNE 2008
PROJ	359024
DWG	C-13
SHEET	16

BID DOCUMENTS

FILENAME: dn05c472_359204.dgn PLOT DATE: 7/31/2008 PLOT TIME: 9:27:01 AM

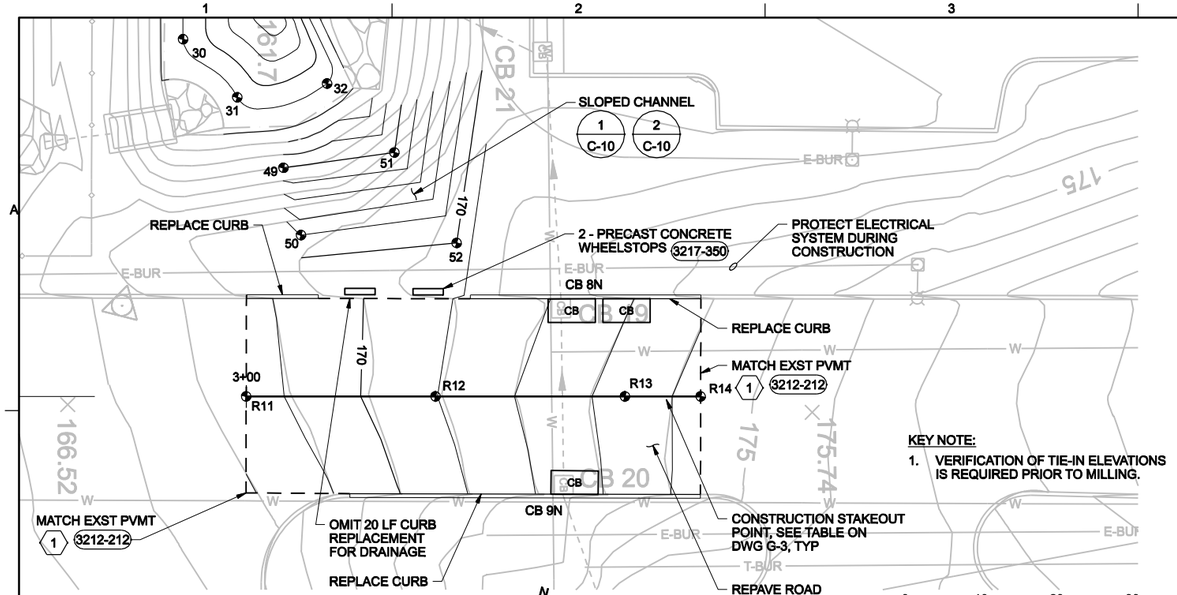

PLAN

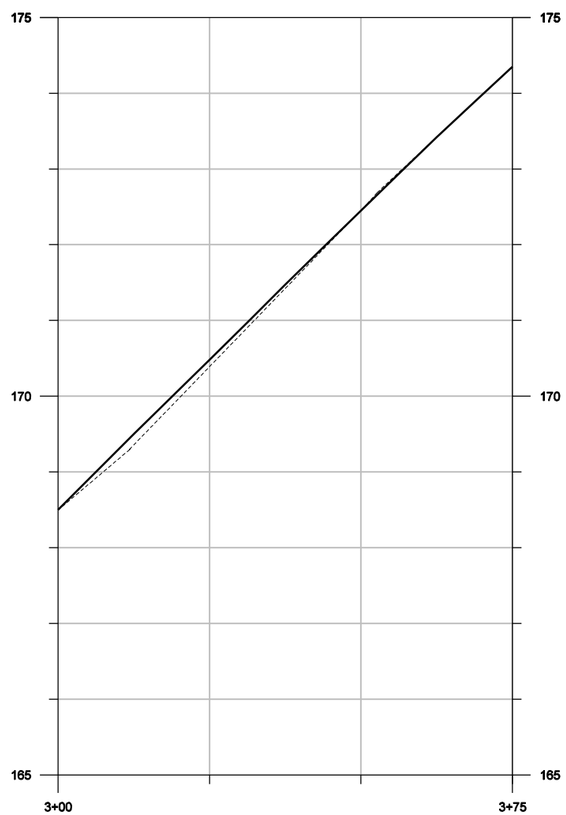

PROFILE

LEGEND

PROPOSED GRADE

EXISTING GRADE

0 2 4 6
VERTICAL SCALE

0 10 20 30
HORIZONTAL SCALE

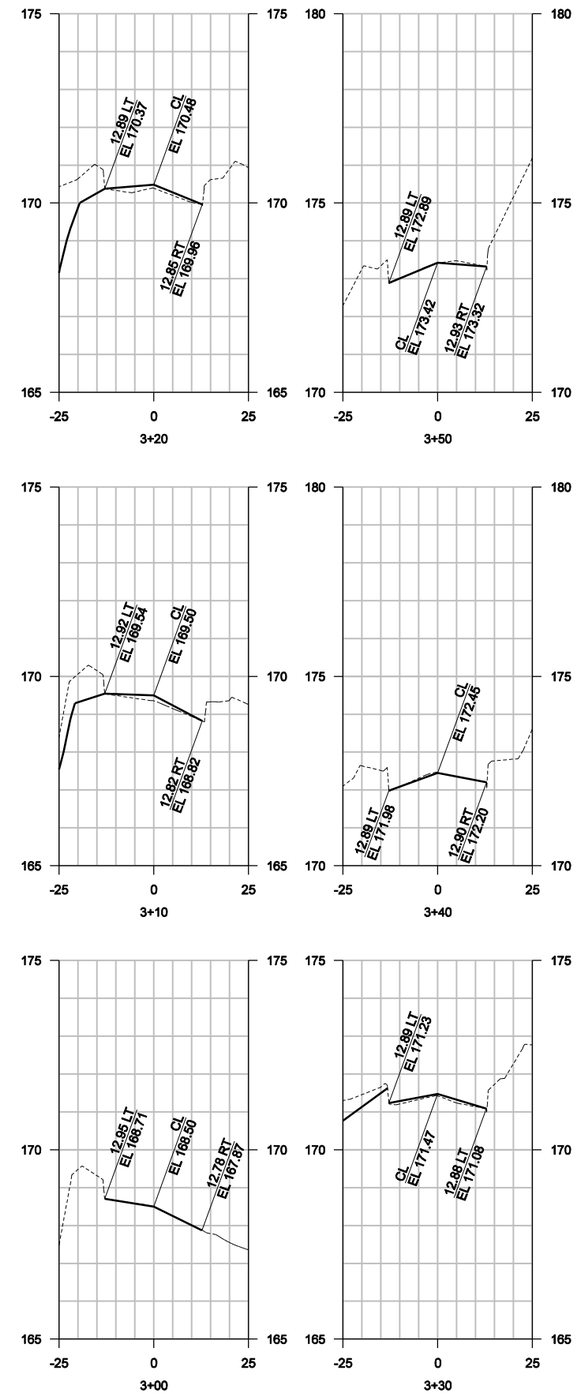

CROSS SECTIONS

0 2 4 6
VERTICAL SCALE

0 20 40 60
HORIZONTAL SCALE

		JHM	DMD
		BY	APVD
REFINED PAVING PLAN			MD MITTAG
REVISION		CHK	APVD
			JE STUBER
	DR	JIM HOLMQUIST	
1	07/08		
NO.	DATE		
DSGN	MW HOLMQUIST		

REPAIR STORMWATER DRAINAGE AND DETENTION SYSTEMS

ORANGE, CONNECTICUT
PROJECT SKXJ072201
CONNECTICUT AIR NATIONAL GUARD
103D AIR CONTROL SQUADRON

CH2MHILL

CIVIL
WEST ROADWAY
PLAN AND PROFILE
AND CROSS SECTIONS

VERIFY SCALE
BAR IS ONE INCH ON ORIGINAL DRAWING.
0 1"

DATE	JUNE 2008
PROJ	359024
DWG	C-14
SHEET	17

BID DOCUMENTS

FILENAME: dn05c473_359204.dgn PLOT DATE: 7/31/2008 PLOT TIME: 9:28:03 AM

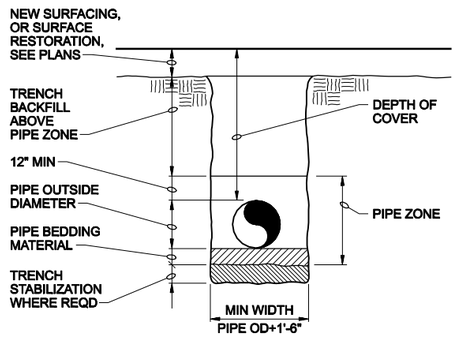

TYPICAL TRENCH
NTS

3123-110

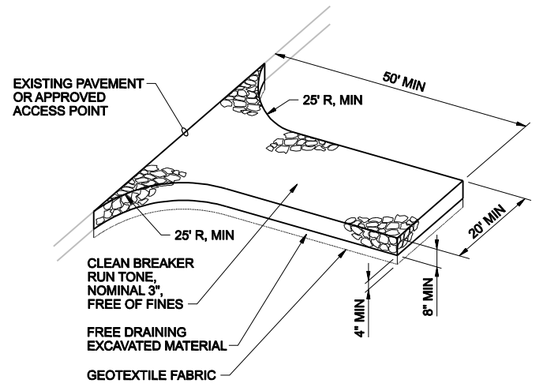

NOTES:

1. THE STRUCTURE'S THICKNESS SHALL BE CONSTANTLY MAINTAINED TO THE SPECIFIED DIMENSIONS BY ADDING ROCK. AT THE END OF EACH CONSTRUCTION DAY, ALL SEDIMENT DEPOSITED ON THE ROADWAYS SHALL BE REMOVED AND RETURNED TO THE CONSTRUCTION SITE. WASHING THE ROADWAY IS NOT PERMITTED.
2. ROCK CONSTRUCTION ENTRANCE SHALL BE BUILT AT ALL LOCATIONS WHERE THE CONTRACTOR WILL ACCESS THE CONSTRUCTION SITE FROM ANY PAVED ROAD, PUBLIC OR PRIVATE. CONTRACTOR SHALL UTILIZE THE ROCK CONSTRUCTION WHENEVER ANY VEHICLE LEAVES AN UNIMPROVED AREA ONTO A PAVED ROAD.
3. ROCK CONSTRUCTION ENTRANCES SHALL BE CONSTRUCTED TO THE MINIMUM WIDTH AND THICKNESS DIMENSIONS AS SHOWN.

CONSTRUCTION ENTRANCE
NTS

3125-130

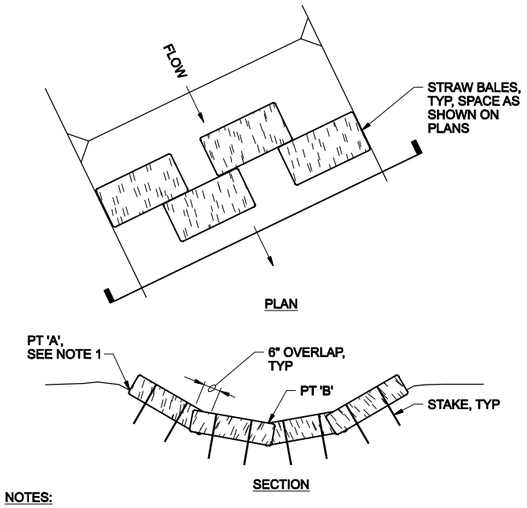

NOTES:

1. POINT 'A' MUST BE 6" MINIMUM HIGHER THAN PT 'B'.
2. STAKING OF BALES IS REQUIRED USING (2)2"x2"x3' LONG WOOD STAKES OR APPROVED EQUAL PER BALE.
3. DRIVE STAKES MINIMUM 12" INTO GROUND AND FLUSH WITH TOP OF BALES.
4. EMBED BALES MINIMUM OF 4" INTO GROUND SURFACE.
5. BIOFILTER BAGS TO BE USED, IF SPECIFIED.

STRAW BALES IN DITCHES
NTS

3125-170

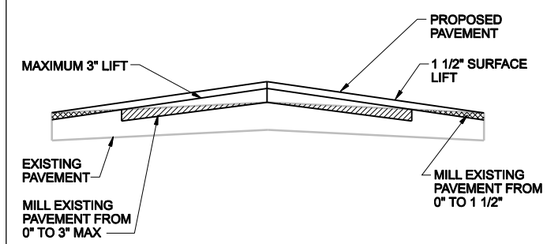

NOTE:

PROVIDE ADDITIONAL UNIFORM THICKNESS LIFT UP TO 3-INCHES MAXIMUM OR ELIMINATE LIFT UP TO 3-INCHES SHOWN TO ACHIEVE NEW ROAD GRADES.

TYPICAL ROADWAY SECTION
NTS

3212-211

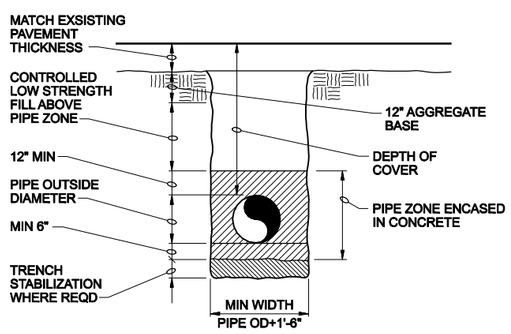

TYPICAL WATERMAIN TRENCH
NTS

3123-111

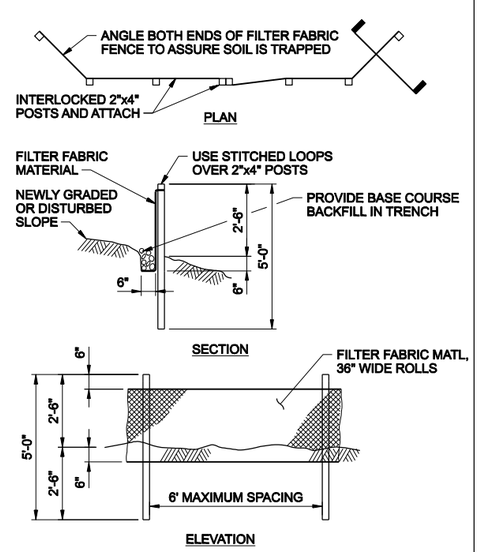

NOTES:

1. BURY BOTTOM OF FILTER FABRIC 6" VERTICALLY BELOW FINISHED GRADE.
2. 2"x4" DOUGLAS FIR OR STEEL FENCE POSTS.
3. STITCHED LOOPS TO BE INSTALLED DOWNHILL SIDE OF SLOPE.
4. COMPACT ALL AREAS OF FILTER FABRIC TRENCH.

SILT FENCE
NTS

3125-165

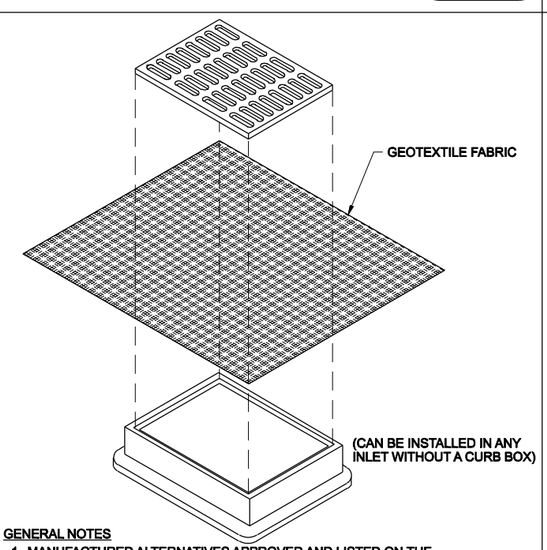

GENERAL NOTES

1. MANUFACTURED ALTERNATIVES APPROVED AND LISTED ON THE DEPARTMENT'S EROSION CONTROL PRODUCT ACCEPTABILITY LIST MAY BE SUBSTITUTED.
2. WHEN REMOVING OR MAINTAINING INLET PROTECTION, CARE SHALL BE TAKEN SO THAT THE SEDIMENT TRAPPED ON THE GEOTEXTILE FABRIC DOES NOT FALL INTO THE INLET. ANY MATERIAL FALLING INTO THE INLET SHALL BE REMOVED IMMEDIATELY.

INSTALLATION NOTES

1. TRIM EXCESS FABRIC IN THE FLOW LINE TO WITHIN 3" OF THE GRATE.
2. THE CONTRACTOR SHALL DEMONSTRATE A METHOD OF MAINTENANCE, USING A SEWN FLAP, HAND HOLDS OR OTHER METHOD TO PREVENT ACCUMULATED SEDIMENT FROM ENTERING THE INLET.

INLET PROTECTION, TYPE B (WITHOUT CURB BOX)
NTS

3125-187

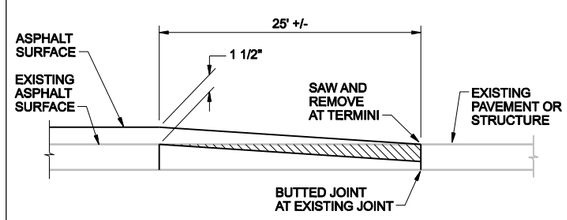

OVERLAP JOINT, BUTTED DETAIL
NTS

3212-212

NO.	DATE	REVISION	CHK	BY	APVD
1	07/08	REVISED 3123-111 AND ADDED 3212-211, 212 AND 221	JE STUBER	JMH	MDM

DSGN EL CAVANAUGH | DR P RAYMONT | APVD MD MITTAG

REPAIR STORMWATER DRAINAGE AND DETENTION SYSTEMS

103D AIR CONTROL SQUADRON
PROJECT SKXJ072201
CONNECTICUT AIR NATIONAL GUARD
ORANGE, CONNECTICUT

CH2MHILL

STANDARD DETAILS

VERIFY SCALE
BAR IS ONE INCH ON ORIGINAL DRAWING.
0 1"

DATE	JUNE 2008
PROJ	359024
DWG	SD-1
SHEET	18

BID DOCUMENTS

FILENAME: dn01g301_359204.dgn PLOT DATE: 7/31/2008 PLOT TIME: 9:28:08 AM

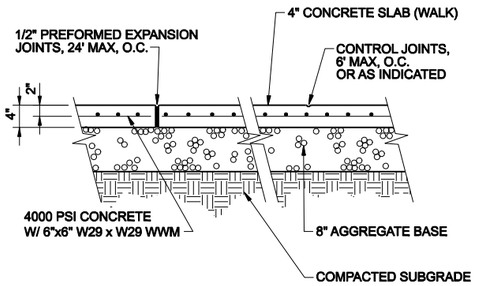

CONCRETE SIDEWALK
NTS

3213-221

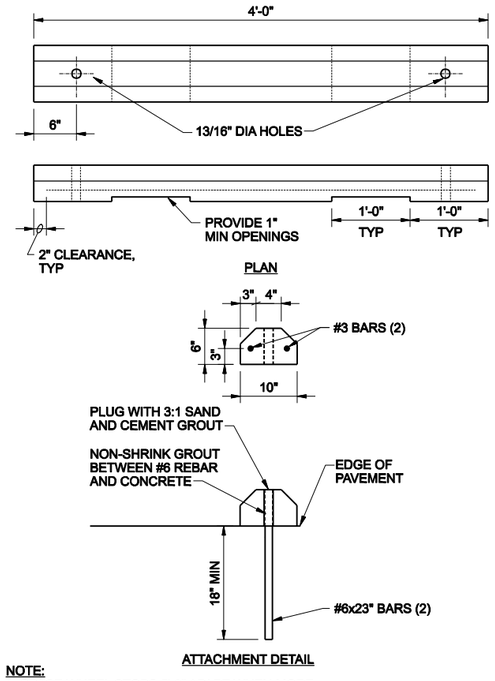

NOTE:
1. SPACE WHEEL STOPS 5'-0" APART WHEN MORE THAN ONE WHEEL STOP IS REQUIRED.

PRECAST CONCRETE WHEEL STOP
NTS

3217-350

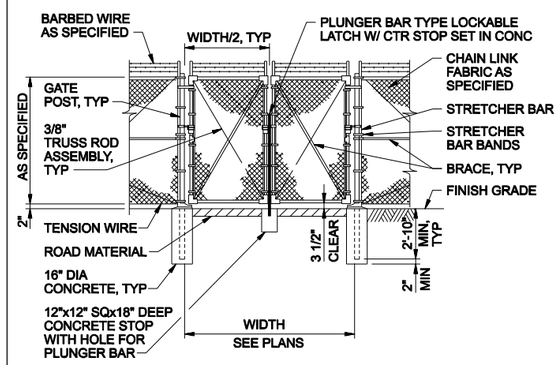

DOUBLE SWING GATE
NTS

3231-415

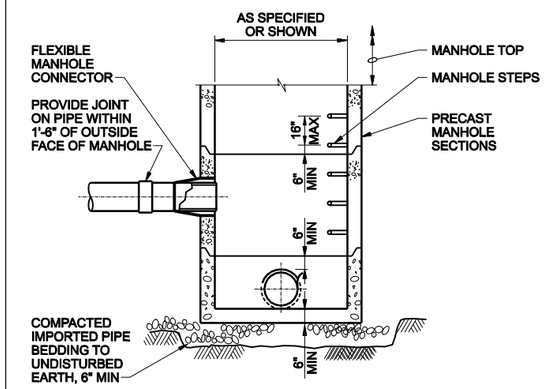

MANHOLE BASE SECTION - 6" TO 24" PIPE
NTS

3305-710

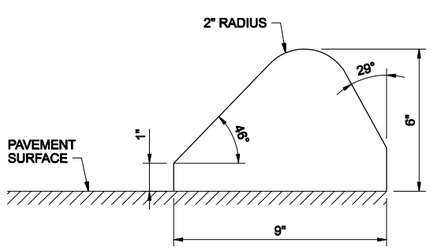

BITUMINOUS CONCRETE CURB DETAIL
NTS

3216-335

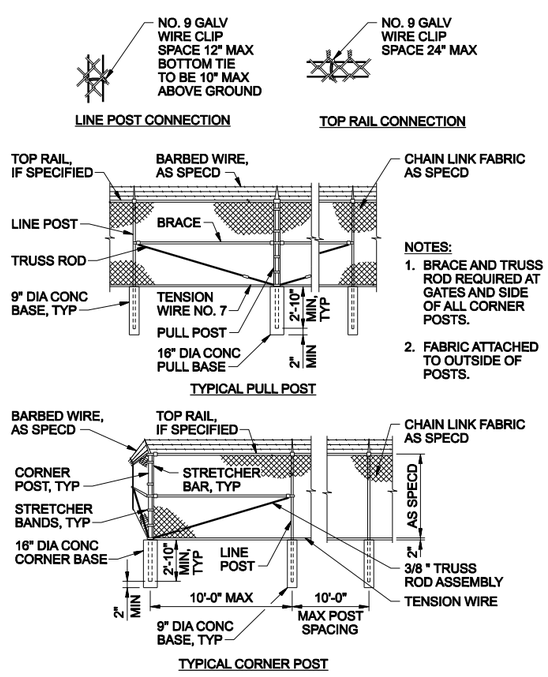

NOTES:
1. BRACE AND TRUSS ROD REQUIRED AT GATES AND SIDE OF ALL CORNER POSTS.
2. FABRIC ATTACHED TO OUTSIDE OF POSTS.

CHAIN LINK FENCE
NTS

3231-410

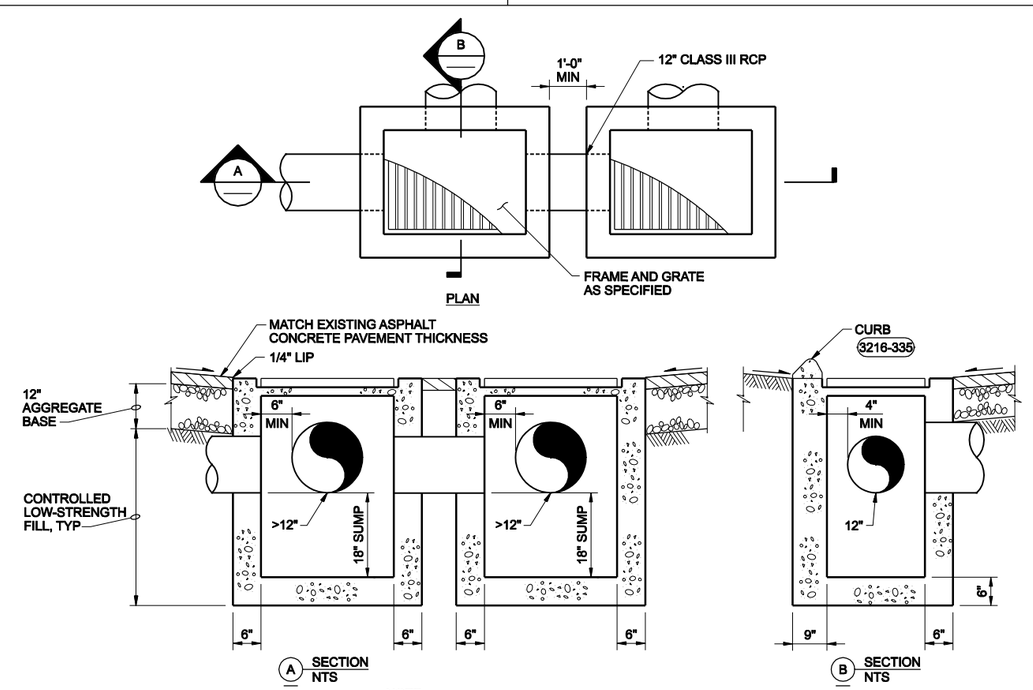

NOTE:
FACTORY INSTALL OR CORE DRILL ON-SITE OPENINGS FOR EXISTING SEWERS.

CATCH BASIN
NTS

3344-780

NO.	DATE	REVISION	BY	APVD
1	07/08	MOVED 3216-335 & 3217-350 FROM SD-1 & ADDED 3213-221.	JMH	MDM

DSGN EL CAVANAUGH | DR P RAYMONT | CHK JE STUBER | APVD MD MITTAG

REPAIR STORMWATER DRAINAGE AND DETENTION SYSTEMS

103D AIR CONTROL SQUADRON
PROJECT SKXJ072201
CONNECTICUT AIR NATIONAL GUARD
ORANGE, CONNECTICUT

CH2MHILL

STANDARD DETAILS

VERIFY SCALE
BAR IS ONE INCH ON ORIGINAL DRAWING.
0 1"

DATE	JUNE 2008
PROJ	359024
DWG	SD-2
SHEET	19

BID DOCUMENTS

FILENAME: dn01g302_359204.dgn PLOT DATE: 7/31/2008 PLOT TIME: 9:28:15 AM