NPS NO.	REG	STATE	PROJECT	SHEET NO.	TOTAL SHEETS
601 / 43,952	SE	NC	PRA-BLRI 2E15	A1	41

U.S. DEPARTMENT OF THE INTERIOR

NATIONAL PARK SERVICE

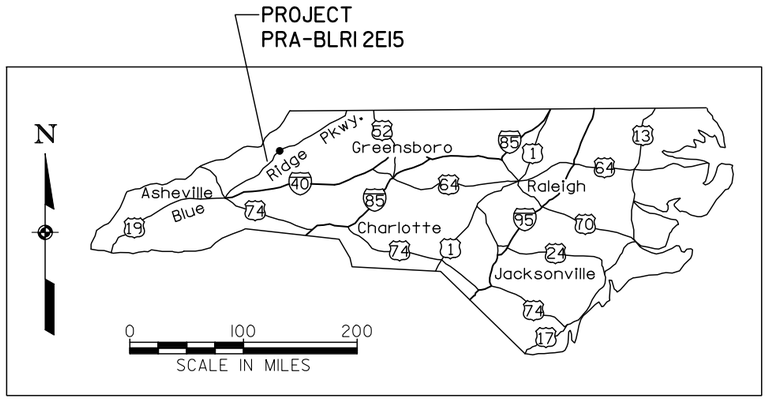

KEY MAP STATE OF NORTH CAROLINA

BLUE RIDGE PARKWAY

PLANS FOR PROPOSED

PROJECT PRA-BLRI 2E15

INDEX TO SHEETS

SHEET NO	DESCRIPTION
A1	Title Sheet
A2	Location Map
A3	Symbols And Abbreviations
A4	Survey Information Sheet
B1	Typical Section
C1	Tabulation of Quantities
C2-C3	Summaries and Schedules
D1-D2	Slide Repair Plan and Profile
M1	Erosion Control Narrative
N1-N2	Detour Signing Plan
S1-S12	Standard And Detail Drawings
T1-T16	Roadway Cross Sections

SLOPE STABILIZATION WITH ANCHOR BLOCKS MP 270.3

WILKES COUNTY, NORTH CAROLINA

DESCRIPTION OF PROJECT

IMPROVEMENT: Slope stabilization and road repair

PROJECT LENGTH: 0.15 Miles Mainline Roadway

ROAD: Asphalt

DESIGN DESIGNATION:

ADT Base Year (2007)	750
ADT (2008)	765
ADT (2028)	1000
%Truck	2 %
V (MPH)	50
C/A	Full
e(max)	8%

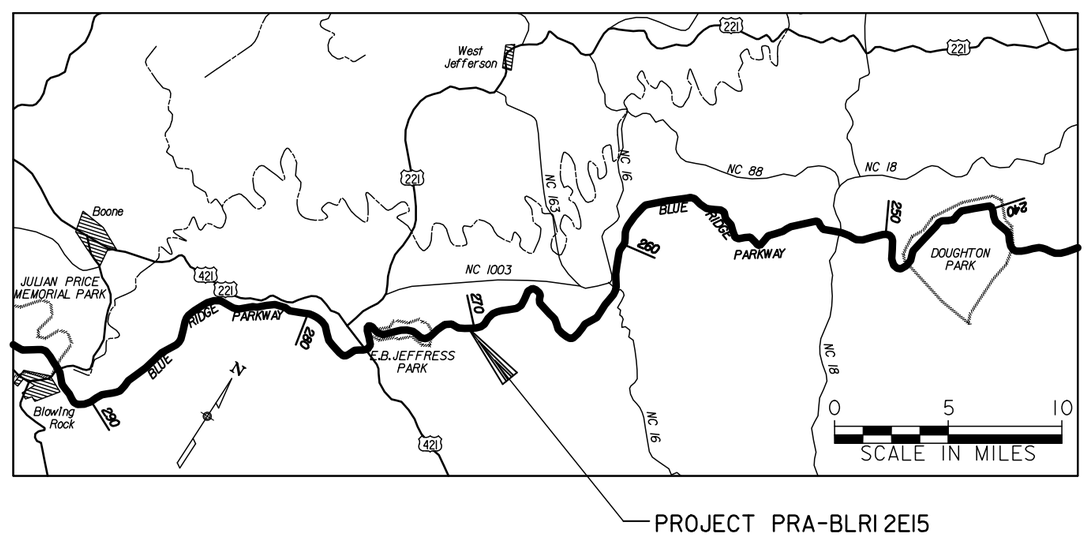

SPECIFICATIONS:

"Standard Specifications for Construction of Roads and Bridges on Federal Highway Projects", FP-03 U.S.Customary Units.

PLANS PREPARED BY

U.S. Department of Transportation
Federal Highway Administration

EASTERN FEDERAL LANDS HIGHWAY DIVISION
STERLING, VIRGINIA
July 2008

PROJECT MANAGER	HD MANAGER	LEAD DESIGNER
TOM SHIFFLETT	JENNIFER WHELCHEL	BENJAMIN DIXON

PMIS NO. 82566

7/22/2008 2:06:19 PM m:\projects\blri\2e15\proj_dev\cadd\A0-blri2e15_M1.dgn

NPS NO.	REG	STATE	PROJECT	SHEET NO.
601 / 43,952	SE	NC	PRA-BLRI 2E15	A2

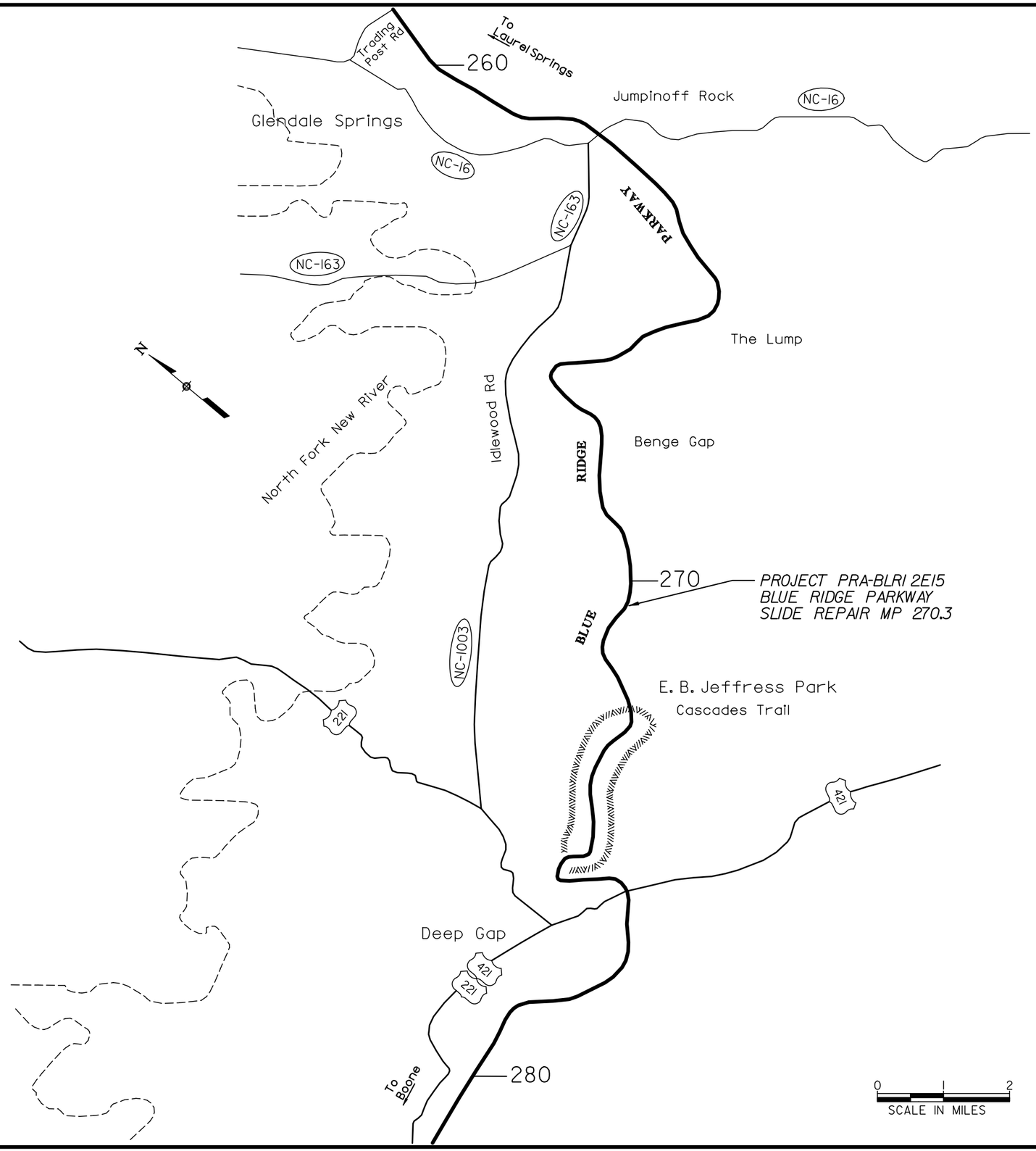

Note:

1. *Stage all equipment and material within the project limits or outside the park boundary*

LEGEND:

1514 *STATE ROUTE*

221 *INTERSTATE ROUTE*

U.S. DEPARTMENT OF TRANSPORTATION
FEDERAL HIGHWAY ADMINISTRATION
EASTERN FEDERAL LANDS HIGHWAY DIVISION
STERLING, VIRGINIA

BLUE RIDGE PARKWAY

LOCATION MAP

7/22/2008 2:06:26 PM m:\proj\eds\blri\2e15\proj_dev\cadd\A02-blri2e15_loc.dgn

NPS NO.	REG	STATE	PROJECT	SHEET NO.
601 / 43,952	SE	NC	PRA-BLRI 2E15	A3

Abutment	Abut.
Aggregate	aggr.
Ahead	AH
Alternate	alt.
Average daily traffic	ADT
Back	BK
Balance point	BP
Bearing	brg.
Begining	beg.
Bench mark	BM
Centerline	
Center to center	cc, c-c or c. to c.
Centers	ctrs.
Clear	clr.
Column	col.
Connection	conn.
Construction joint	Constr. jt.
Continuous	cont.
Corrugated metal pipe	CMP
Culvert	culv.
Curve centeral angle (spiral curve transitions)	Δ_c
Curve total angle (curve delta or deflection)	Δ
Design hourly volume	DHV
Design speed	V
Diagonal	diag.
Diameter	D, dia., or
Diaphragm	diaph.
Distance	dist.
Drawing(s)	dwg(s), or drwg(s)
Drop Inlet	DI
East	E
Edge of pavement	EP or EOP
Elevation	elev.
Elevation with number	El. 94.161 [El. 94.16]
Embankment	emb.
End section	ES
Equation	EQ or eq.
Excavation	exc.
Expansion joint	exp. jt.
Finish	fin.
Flange	flg.
Footing	ftg.
Galvanized	galv.
Gage(gauge)	ga.
Headwall	hdwl.
Hexagon	hex.
High water	HW
Inside diameter	ID
Joint	jt.
Lamination	lam.
Latitude	lat.
Left	lt., Lt. or LT
Length of curve(simple curve)	L
Length of curve (spiral curve transision)	Lc
Length of spiral	Ls
Longitudinal(longitude)	long.
Low water	LW

Mainline	M.L.
Material	mati.
Maximum	max.
Mile[Kilometer] post	M.P[K.P.]
Minimum	min.
Monument	mon.
Mechanically stabilized embankment	MSE
Original groung	OG
Out to out	o. to o.
Outside diameter	OD
On centers	o. c.
Normal crown	NC or NCR
North	N
Pavement	pvmt.
Plate	pl.
Point of compound curve	PCC
Point of curve	PC
Point of curve to spiral	PCS or CS
Point of intersection	PI
Point of spiral to curve	PSC or SC
Point of spiral to reverse spiral	SRS
Point of spiral to tangent	PST or ST
Point of tangent	PT
Point of tangent to spiral	PS or TS
Point on curve	POC
Point on spiral	POS
Point on tangent	POT
Radius	R
Range	R.
Reinforcement (reinforced)	reinf.
Required	reqd.
Right	Rt., rt.or RT
Right-of-way	R/W
Roadway	Rdwy.
Route	Rte.
Section	Sec.
South	S
Spacing, spaces or spaced	spa.
Spiral central angle	s
Standard	std.
Station	Sta.
Stiffener	stiff.
Stringer	stgr.
Structure	struc.
Superelevation rate	e
Symmetrical	sym.
Tangent distance (tangent length)	T
Tangent distance (spiral curve transision)	Ts
Temporary benchmark	TBM
Temporary construction easement	TCE
Thread	thd.
Township	T.
Typical	typ.
Vehicle per hour	vph
Vertical point of intersection	VPI
West	W

NATIONAL BOUNDARY
STATE BOUNDARY
COUNTY BOUNDARY
CITY BOUNDARY
TOWNSHIP or RANGE LINE
SECTION LINE
¼ SECTION LINE
1/16 SECTION LINE
NATIONAL PARK or FOREST BOUNDARY
PROPERTY LINE — P/L
TRAVERSE POINT (Horizontal & Vertical) Top of Triangle Points North — T-45 2,645.9
TRAVERSE POINT (Horizontal) — T-3
BRASS CAP
STEEL PIN
HUB & TACK
SPOT ELEVATION — 99.9
COORDINATE GRID TICK

	EXISTING	PROPOSED
RIGHT-OF-WAY LINE	R/W	R/W
RIGHT-OF-WAY LINE with MONUMENT	R/W	R/W
SECTION CORNER	FOUND 36 31 1 6	PROJECTED 36 31 1 6
¼ SECTION CORNER	15 22	15 22
1/16 SECTION		
PROPERTY CORNER		No Symbol
PARCEL NUMBER	No Symbol	400
EASEMENT (Permanent - Construction)	P/E	C/E
ROUTE NUMBERS	26 INTERSTATE	25 U.S. / 694 STATE

SLOPE STAKE — TOP OF CUT, TOE OF FILL, TRANSITION
ROADWAY, EXISTING
RAILROAD — SINGLE TRACK, MULTIPLE TRACK
TRAIL
INTERMITTENT DRAINAGE/ SMALL CREEK
SPRING
LARGE CREEK/RIVER
LAKE, POND or RESERVOIR; MARSHLAND
PAVEMENT REMOVAL/ROADWAY OBLITERATION
FULL DEPTH PAVEMENT
SIDEWALK ASPHALT/CONCRETE
MILL AND OVERLAY
OVERLAY
SILT FENCE — SF
DIVERSION BERM — DB
DIVERSION CHANNEL
CHECK DAM
RIPRAP/CULVERT RIPRAP
BORING LOCATION — B-1
TEST PIT — TP-1
NORTH ARROW — N
MATERIAL SOURCE

AREA PATTERN

	EXISTING	PROPOSED
FENCE	X X	XX XX
GATE with FENCE	X X	XX XX
CATTLEGUARD		
GUARDRAIL		
MEDIAN & SIDE (CONCRETE) BARRIER		
SIGNS — POST MOUNTED		
SIGNS — PORTABLE	No Symbol	
RETAINING WALL		wall face
OVERHEAD(POWER POLE) UTILITIES P=Electrical for transmission line E=Electrical for distribution line T=Telephone, E&T=Joint Electrical and Telephone FO=Fibre optics	P	P
SUPPORT POLE with ANCHOR		
TELEPHONE BOOTH or PEDESTAL	TB or TP	TB or TP
STREET LIGHT	or	or
UNDERGROUND UTILITIES G=gas, O=oil, P=power, SA=sanitary sewer, SS=storm sewer, T=telephone, W=water E=electrical, FO=fibre optics	W	W
BRIDGE		
PIPE CULVERT (arrow shows flow)		
PIPE CULVERT with END SECTION		
PIPE CULVERT with HEADWALL		
CULVERT with DROP INLET		
BOX CULVERT		
UNDERDRAIN	UD	UD
BUILDING		
TREELINE; TREE		

PROJECT SPECIFIC SYMBOLS AND ABBREVIATIONS:-

CONSTRUCTION ENTRANCE
TEMPORARY SLOPE DRAIN — TSD
SUPER SILT FENCE — SSF
LIMIT OF DISTURBANCE — LOD
GROUND ANCHOR

U.S. DEPARTMENT OF TRANSPORTATION
FEDERAL HIGHWAY ADMINISTRATION
EASTERN FEDERAL LANDS HIGHWAY DIVISION
STERLING, VIRGINIA

BLUE RIDGE PARKWAY

SYMBOLS AND ABBREVIATIONS

7/22/2008 2:06:28 PM m:\projects\blri\2e15\proj_dev\cadd\A03-blri2e15_symdgn

NPS NO.	REG	STATE	PROJECT	SHEET NO.
601 / 43,952	SE	NC	PRA-BLRI 2E15	A4

STAKED ALIGNMENT DATA

STATION	OFFSET	NORTHING	EASTING	ELEV.	TYPE
0+00.000	0.000'	10149.709	1265.068	991.832	NAIL
0+50.000	0.000'	10132.264	1218.225	993.881	NAIL
1+00.000	0.000'	10112.345	1172.361	995.720	NAIL
1+34.195	0.000'	10097.491	1141.578	997.020	NAIL
1+50.000	0.000'	10090.256	1127.563	997.582	NAIL
2+00.000	80.00' LT	9996.509	1122.014	955.405	STAKE
2+00.000	60.00' LT	10014.944	1112.779	966.483	STAKE
2+00.000	0.000' LT	10066.731	1083.460	999.200	NAIL
2+00.000	40.00' LT	10030.519	1101.233	980.892	STAKE
2+20.000	100.00' LT	9969.572	1114.808	944.875	STAKE
2+40.000	120.00' LT	9942.989	1107.736	933.793	STAKE
2+50.000	0.000'	10042.134	1039.850	1000.014	NAIL
2+60.000	160.00' LT	9898.995	1111.784	907.847	STAKE
2+60.000	140.00' LT	9916.346	1101.607	919.149	STAKE
2+80.000	200.00' LT	9855.503	1116.532	882.688	STAKE
2+80.000	180.00' LT	9872.396	1106.498	890.030	STAKE
3+00.000	0.000'	10016.613	996.860	1001.025	NAIL
3+21.202	0.000'	10005.541	978.871	1001.705	NAIL
3+50.000	0.000'	9990.255	954.456	1002.714	NAIL
3+60.000	200.00' LT	9815.448	1052.092	884.946	STAKE
3+80.000	180.00' LT	9822.131	1024.498	896.742	STAKE
4+00.000	180.00' LT	9811.180	1007.140	899.619	STAKE
4+00.000	160.00' LT	9826.819	995.843	910.704	STAKE
4+00.000	140.00' LT	9844.997	988.241	921.262	STAKE
4+00.000	0.000' LT	9963.668	912.041	1004.790	NAIL
4+40.000	120.00' LT	9840.930	941.629	937.420	STAKE
4+40.000	100.00' LT	9857.921	930.946	947.229	STAKE
4+40.000	80.00' LT	9874.700	920.438	958.869	STAKE
4+40.000	60.00' LT	9891.668	909.756	973.143	STAKE
4+40.000	40.00' LT	9908.675	898.976	989.592	STAKE
4+50.000	0.000'	9937.210	869.591	1006.028	NAIL
5+00.000	0.000'	9910.760	827.252	1007.262	NAIL
5+35.492	0.000'	9891.920	797.124	1008.209	NAIL
5+50.000	0.000'	9884.326	784.786	1008.564	NAIL
6+00.000	0.000'	9860.038	741.145	1009.844	NAIL
6+50.000	0.000'	9838.604	695.833	1011.080	NAIL
7+00.000	0.000'	9820.360	649.368	1012.379	NAIL
7+43.273	0.000'	9807.022	608.211	1013.657	NAIL
7+50.000	0.000'	9805.061	601.713	1013.877	NAIL
7+61.173	0.000'	9802.022	591.009	1014.287	NAIL

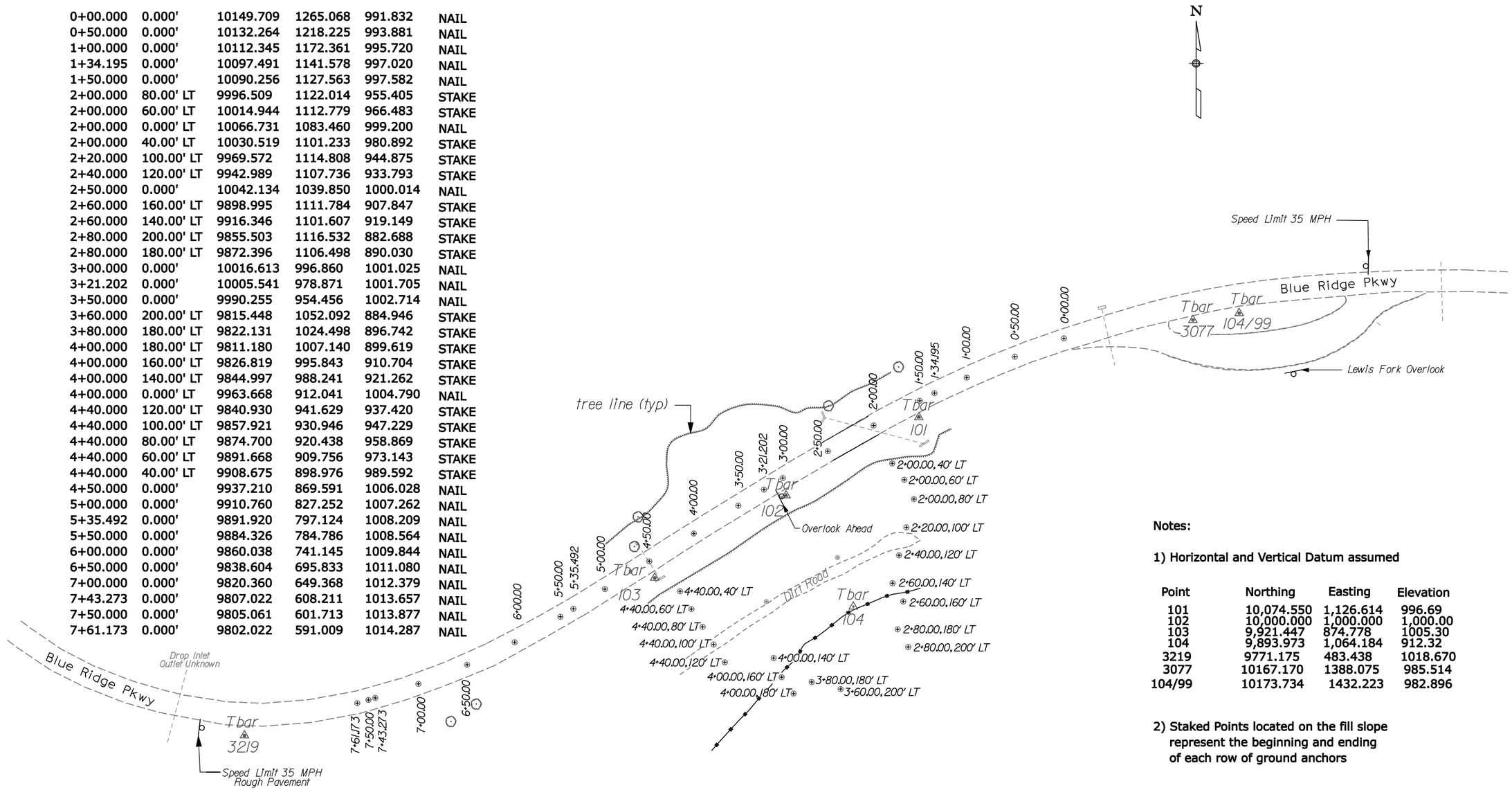

Notes:

1) Horizontal and Vertical Datum assumed

Point	Northing	Easting	Elevation
101	10,074.550	1,126.614	996.69
102	10,000.000	1,000.000	1,000.00
103	9,921.447	874.778	1005.30
104	9,893.973	1,064.184	912.32
3219	9771.175	483.438	1018.670
3077	10167.170	1388.075	985.514
104/99	10173.734	1432.223	982.896

2) Staked Points located on the fill slope represent the beginning and ending of each row of ground anchors

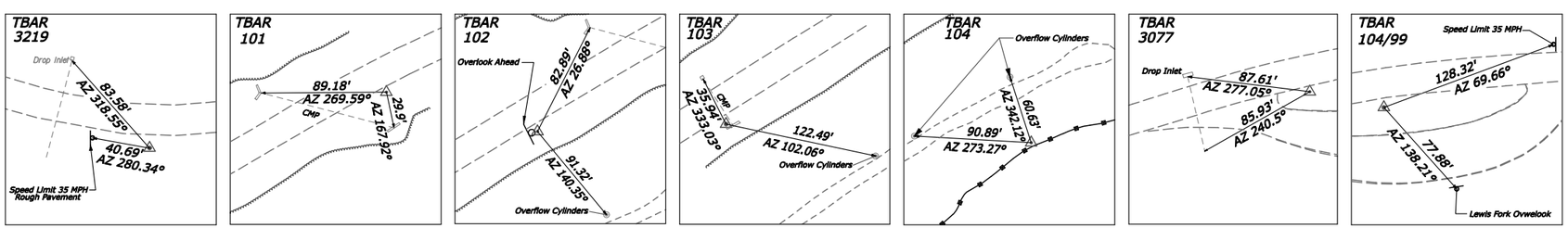

U.S. DEPARTMENT OF TRANSPORTATION
FEDERAL HIGHWAY ADMINISTRATION
EASTERN FEDERAL LANDS HIGHWAY DIVISION
STERLING, VIRGINIA

BLUE RIDGE PARKWAY

SURVEY INFORMATION SHEET

0 50 100
SCALE IN FEET

7/22/2008 2:06:36 PM m:\projects\blri\2ei5\proj_dev\cadd\A04-blri2ei5_sur.dgn

NPS NO.	REG	STATE	PROJECT	SHEET NO.
601 / 43,952	SE	NC	PRA-BLRI 2E15	B1

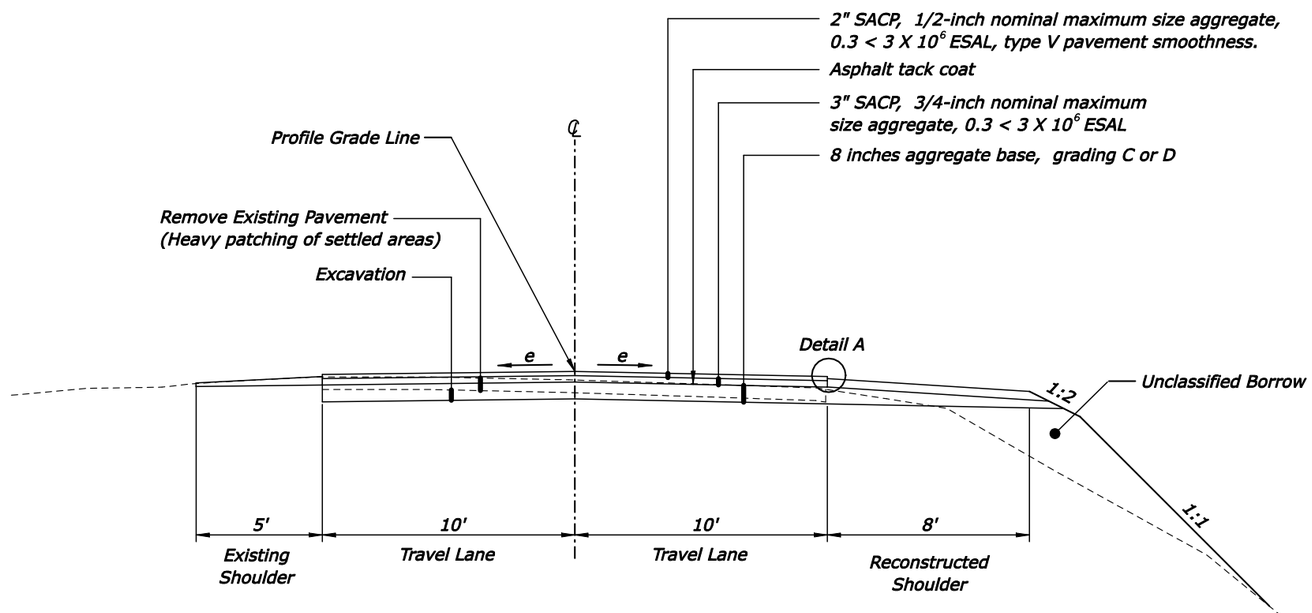

Typical Section

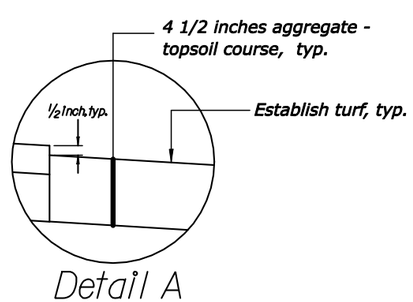

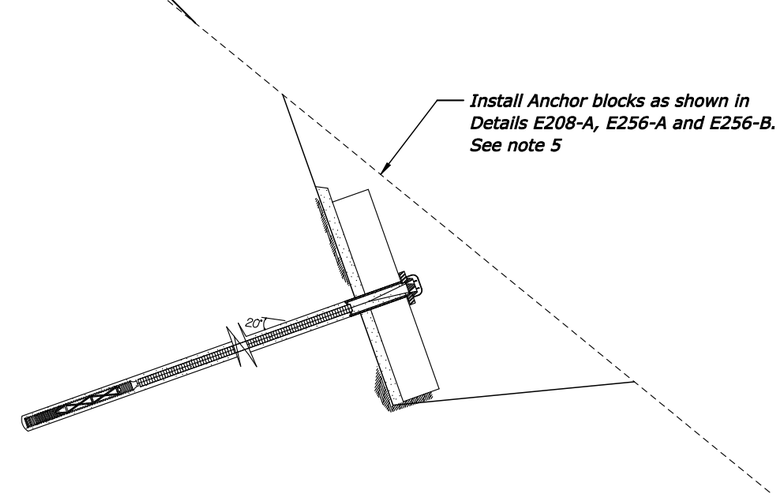

Notes:

1. *Use 6% cross-slope for left shoulder and 10% cross-slope for right shoulder unless it exceeds 8 percent algebraic difference in the cross-slope roll-over from pavement to shoulder, then adjust cross-slope accordingly.*
2. *Place final pavement markings, type H to match existing pavement markings.*
3. *Provide administrative access through the slide area at all times.*
4. *See profile view for proposed cross-slopes. Match existing pavement cross-slopes at beginning and ending points of reconstruction. Allow 20' for transitioning between existing and proposed cross-slopes.*
5. *See Anchor Block Schedule for Anchor locations.*
6. *Lateral pay limits of clearing and grubbing extend from the end of the northen shoulder down to the bottom excavation limit of the bottom row of ground anchors and do not include the width of the paved road.*

U.S. DEPARTMENT OF TRANSPORTATION
FEDERAL HIGHWAY ADMINISTRATION
EASTERN FEDERAL LANDS HIGHWAY DIVISION
STERLING, VIRGINIA

BLUE RIDGE PARKWAY

TYPICAL SECTION

8/18/2008 8:46:43 AM M:\Projects\blri\2ai15\proj_dev\CADD\B01-blri2ai15_typ.dgn

NPS NO.	REG	STATE	PROJECT	SHEET NO.
601 / 43,952	SE	NC	PRA-BLRI 2E15	C1

PLAN SHEET SECTION -------->>				ESTIMATED QUANTITIES	
ITEM	DESCRIPTION	UNIT		PLAN	BID SCHEDULE
15101-0000	MOBILIZATION	LPSM		ALL	ALL
15201-0000	CONSTRUCTION SURVEY AND STAKING	LPSM		ALL	ALL
15401-0000	CONTRACTOR TESTING	LPSM		ALL	ALL
15705-0100	SOIL EROSION CONTROL, SILT FENCE (SUPER)	LNFT	2345	2345	2,600
15705-0300	SOIL EROSION CONTROL, SLOPE DRAINS	LNFT	601	601	650
15706-1600	SOIL EROSION CONTROL, STABILIZED CONSTRUCTION ENTRANCE	EACH	1	1	1
20101-0000	CLEARING AND GRUBBING	ACRE	1.5	1.5	1.7
20303-1600	REMOVAL OF PAVEMENT, ASPHALT	SQYD	1333	1333	1,500
20401-0000	ROADWAY EXCAVATION	CUYD	552	552	600
20801-0000	STRUCTURE EXCAVATION	CUYD	6167	6167	6,800
25101-2000	PLACED RIPRAP, CLASS 2	CUYD	12	12	13
25602-0000	GROUND ANCHOR	LNFT	7350	7350	8,000
25605-0000	PERFORMANCE TEST	EACH	7	7	10
25610-0000	ANCHOR PAD (PRECAST CONCRETE ANCHOR BLOCK)	EACH	90	90	90
27101-0000	INCLINOMETER CASING	LNFT	165	165	180
27102-0100	GEOTECHNICAL INSTRUMENTATION, PIEZOMETER	EACH	3	3	3
30101-4000	AGGREGATE BASE GRADING C OR D	TON	1099	1099	1,200
30501-0000	AGGREGATE-TOPSOIL COURSE	TON	131	131	150
40101-0600	SUPERPAVE PAVEMENT,<1/2-INCH NOMINAL MAXIMUM SIZE AGGREGATE, 0.3 TO 3 MILLION ESAL (TYPE V PAVEMENT SMOOTHNESS)	TON	131	131	150
40101-1000	SUPERPAVE PAVEMENT,<3/4-INCH NOMINAL MAXIMUM SIZE AGGREGATE, 0.3 TO 3 MILLION ESAL	TON	221	221	240
56602-0000	SHOTCRETE	CUYD	159	159	175
61902-2000	GATE, METAL, 28 FEET WIDTH (TEMPORARY)	EACH	2	2	2
62401-0100	FURNISHING AND PLACING TOPSOIL, 2-INCH DEPTH	SQYD	7260	7260	8,000
62501-0000	TURF ESTABLISHMENT	ACRE	1.6	1.6	1.8
62601-0100	ACER RUBRUM, RED MAPLE, 1 1/2-INCH TO 2-INCH 1/2-INCH CALIPER, BALLED AND BURLAPPED (WHIPS, 2 TO 3 FOOT HEIGHT, BARE ROOT)	EACH	30	30	30

PLAN SHEET SECTION -------->>				ESTIMATED QUANTITIES	
ITEM	DESCRIPTION	UNIT		PLAN	BID SCHEDULE
62612-0250	LIROIDENDREN TULIPFERA, TULIP TREE, 1-INCH TO 1 1/2-INCH CALIPER, BALLED AND BURLAPPED (WHIPS, 2 TO 3 FOOT HEIGHT, BARE ROOT)	EACH	70	70	70
62901-0800	ROLLED EROSION CONTROL PRODUCT, TYPE 2.D	SQYD	7260	7260	8,000
63401-1500	PAVEMENT MARKINGS, TYPE H, SOLID	LNFT	1200	1200	1,250
63502-0600	TEMPORARY TRAFFIC CONTROL, BARRICADE TYPE 3	EACH	4	4	4
63502-1500	TEMPORARY TRAFFIC CONTROL, WARNING LIGHT TYPE A	EACH	4	4	5
63502-1600	TEMPORARY TRAFFIC CONTROL, WARNING LIGHT TYPE B	EACH	31	31	35
63503-1000	TEMPORARY TRAFFIC CONTROL, PLASTIC FENCE	LNFT	250	250	280
63504-1000	TEMPORARY TRAFFIC CONTROL, CONSTRUCTION SIGN	SQFT	903	903	1,000
63701-0000	FIELD OFFICE	EACH	1	1	1

U.S. DEPARTMENT OF TRANSPORTATION
FEDERAL HIGHWAY ADMINISTRATION
EASTERN FEDERAL LANDS HIGHWAY DIVISION
STERLING, VIRGINIA

BLUE RIDGE PARKWAY

TABULATION OF QUANTITIES

7/31/2008 2:37:53 PM M:\Projects\blri\2e15\proj_dev\CADD\C01-blri2e15_qty.dgn

NPS NO.	REG	STATE	PROJECT	SHEET NO.
601 / 43,952	SE	NC	PRA-BLRI 2E15	C2

ANCHOR BLOCK SCHEDULE

SHEET	STATION	OFFSET									REMARKS
		-40	-60	-80	-100	-120	-140	-160	-180	-200	
T2	2+00	85	75	80							
T3	2+20	87	77	78	83						
T4	2+40	90	81	80	78		87				
T5	2+60	91	83	82	78	84	84	85			
T6	2+80	92	86	85	78	80	79	74	72	70	
T7	3+00	93	88		80	79	75	68	65	62	
T7	3+05			88							Block location shifted to avoid horizontal drains
T8	3+20	97	94	91	86	84	78	73	70	67	
T9	3+40	98	95	91	85	83	78	71	65	59	
T10	3+60	98	95	90	84	80	77	68	61	55	
T11	3+80	98	93		82	77	75	67	58		
T11	3+85			87							Block location shifted to avoid horizontal drains
T12	4+00	98	88	81	75	76	74	68	59		
T13	4+20	105	109	97	89	83					
T14	4+40	101	94	88	85	86					

*Values represent approximate total anchor length (feet) including bond zone (minimum 27 feet)

U.S. DEPARTMENT OF TRANSPORTATION
FEDERAL HIGHWAY ADMINISTRATION
EASTERN FEDERAL LANDS HIGHWAY DIVISION
STERLING, VIRGINIA

BLUE RIDGE PARKWAY

ANCHOR BLOCK SCHEDULE

8/18/2008 8:46:49 AM m:\projects\blri\2el5\proj_dev\cadd\C01-blri2el5_dtl-dgn

NPS NO.	REG	STATE	PROJECT	SHEET NO.
601 / 43,952	SE	NC	PRA-BLRI 2E15	C3

CONSTRUCTION SIGNS

Detail No.	MUTCD NO.	SIGN TEXT	PANEL SIZE WIDTH (in)	PANEL SIZE HEIGHT (in)	PANEL SIZE AREA (sqft)	COLOR COMBINATION	QUANTITY	Pay Item 63504-1000 Temp. Traffic Control, Construction Signs Sqft	SUPPORT (NO PAY) ft	REMARKS
	M3-1	NORTH	24.00	12.00	2.00	Black on White	32.00	64.00		
	M3-3	SOUTH	24.00	12.00	2.00	Black on White	18.00	36.00		
	M4-8a	END DETOUR	24.00	18.00	3.00	Black on Orange	2.00	6.00		
	M4-9(L)	DETOUR (LEFT)	30.00	24.00	5.00	Black on Orange	8.00	40.00		
	M4-9(R)	DETOUR (RIGHT)	30.00	24.00	5.00	Black on Orange	9.00	45.00		
	M4-9(RM)	DETOUR (ADVANCE LEFT)	30.00	24.00	5.00	Black on Orange	7.00	35.00		
	M4-9(LM)	DETOUR (ADVANCE RIGHT)	30.00	24.00	5.00	Black on Orange	7.00	35.00		
	M4-9(M)	DETOUR (STRAIGHT)	30.00	24.00	5.00	Black on Orange	19.00	95.00		
	R11-2	ROAD CLOSED	48.00	30.00	10.00	Black on White	2.00	20.00		Mounted on Type III Barricade with 2 Type A Warning Lights
	W20-2	DETOUR 1 MILE	36.00	36.00	9.00	Black on Orange	2.00	18.00		Mounted with Type B Warning Light
	W20-2	DETOUR 1/2 MILE	36.00	36.00	9.00	Black on Orange	2.00	18.00		Mounted with Type B Warning Light
	W20-2	DETOUR 1/4 MILE	36.00	36.00	9.00	Black on Orange	15.00	135.00		Mounted with Type B Warning Light
	Special #1	PARKWAY	30.00	12.00	2.50	Black on White	50.00	125.00		Use 4" Lettering
	Special #2	PARKWAY CLOSED 1/2 MILE AHEAD	72.00	30.00	15.00	Black on Orange	2.00	30.00		Use 6" Lettering with 2 Type B Warning Lights
	Special #3	PARKWAY CLOSED 1 MILE AHEAD	72.00	30.00	15.00	Black on Orange	2.00	30.00		Use 6" Lettering with 2 Type B Warning Lights
	Special #4	← CASCADES	78.00	18.00	9.75	Black on White	1.00	9.75		Use 6" Lettering
	Special #5	PARKWAY CLOSED 2 1/2 MI. AHEAD CASCADES ↑ NO THRU TRAFFIC	84.00	54.00	31.50	Black on White	1.00	31.50		Use 6" Lettering
	Special #6	PARKWAY CLOSED 4 1/2 MI. AHEAD CASCADES ↑ NO THRU TRAFFIC	84.00	54.00	31.50	Black on White	1.00	31.50		Use 6" Lettering
	Special #7	PARKWAY CLOSED 7 MI. AHEAD CASCADES ↑ NO THRU TRAFFIC	84.00	54.00	31.50	Black on White	1.00	31.50		Use 6" Lettering
	Special #8	PARKWAY CLOSED 9 MI. AHEAD CASCADES ↑ NO THRU TRAFFIC	84.00	54.00	31.50	Black on White	1.00	31.50		Use 6" Lettering
	Special #9	PARKWAY CLOSED 1000 FT	36.00	36.00	9.00	Black on Orange	2.00	18.00		Use 6" Lettering with Type B Warning Light
	Special #10	PARKWAY CLOSED 500 FT	36.00	36.00	9.00	Black on Orange	2.00	18.00		Use 6" Lettering with Type B Warning Light
		Subtotal this Sheet			255.25		186.00	903.75	0	

U.S. DEPARTMENT OF TRANSPORTATION
FEDERAL HIGHWAY ADMINISTRATION
EASTERN FEDERAL LANDS HIGHWAY DIVISION
STERLING, VIRGINIA

BLUE RIDGE PARKWAY

CONSTRUCTION SIGNS SUMMARIES AND SCHEDULES

7/22/2008 2:06:59 PM m:\projects\blri\2ai5\proj_dev\odd\C01-blri12ai5_qty.dgn

NPS NO.	REG	STATE	PROJECT	SHEET NO.
601 / 43,952	SE	NC	PRA-BLRI 2E15	D1

Notes:

1. *Typical downslope spacing between rows of anchor blocks is approximately 20 feet.*
2. *Inclinometers should be placed approximately 10 feet from piezometers. Center them both between blocks to maximize the distance.*
3. *Install orange construction fencing to prevent construction equipment from driving or parking on the rubble ditch located north of the Parkway.*
4. *Do not disturb the 34 draw-down wells (vertical shafts) located under the rubble ditch*
5. *Adjust Anchor Block locations to avoid existing horizontal drains as directed by the CO.*
6. *Do not allow construction equipment outside the Limits of Construction.*
7. *Use of existing construction access road is mandatory.*

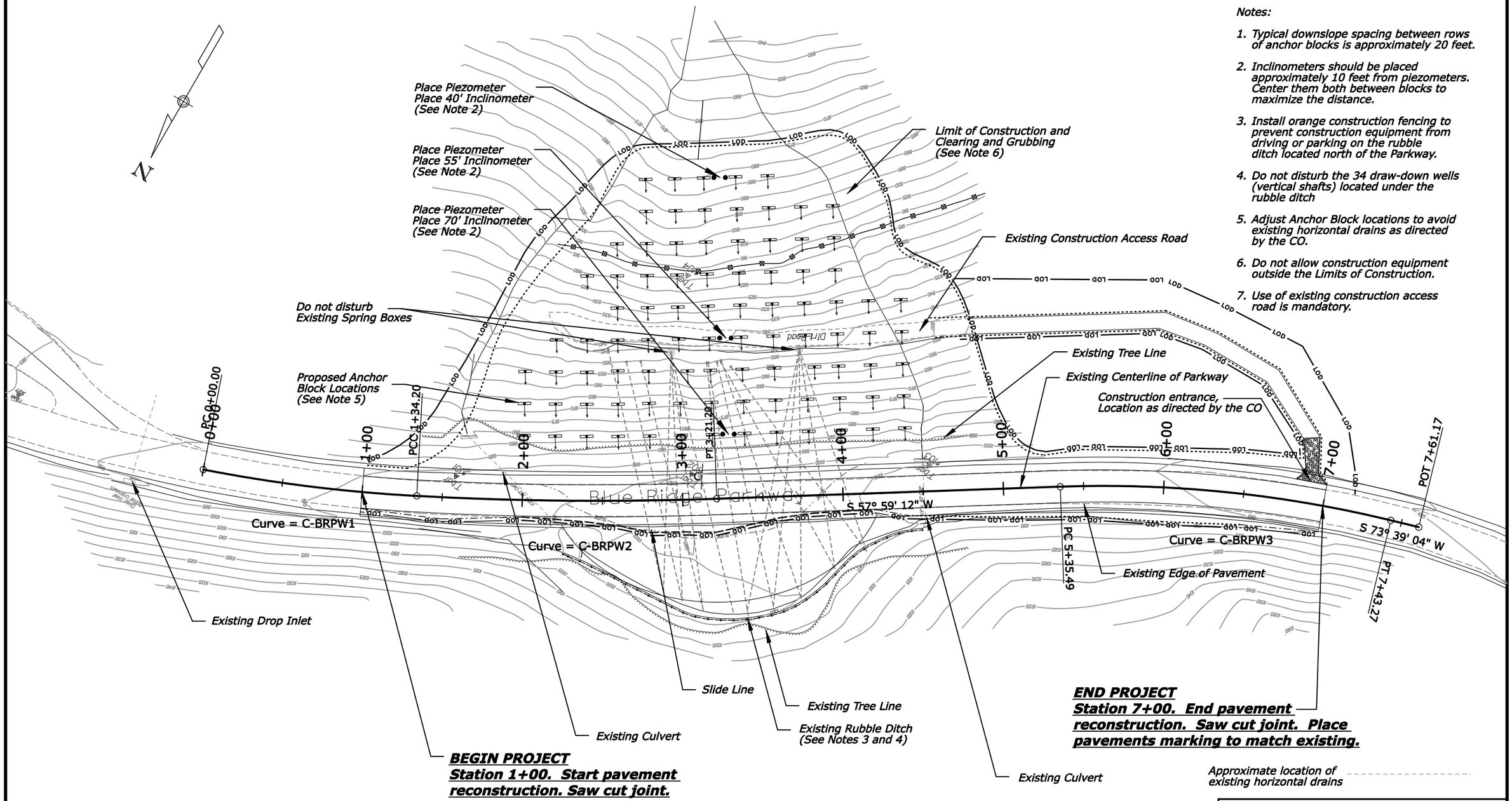

Curve = C-BRPW1
PI 0+67.20
△= 7° 55' 04" (LT)
R = 971.09'
T = 67.20'
L = 134.20'

Curve = C-BRPW2
PI 2+27.76
△= 5° 06' 08" (LT)
R = 2,099.96'
T = 93.56'
L = 187.01'

Curve = C-BRPW3
PI 6+40.03
△= 15° 39' 52" (RT)
R = 760'
T = 104.54'
L = 207.78'

U.S. DEPARTMENT OF TRANSPORTATION
FEDERAL HIGHWAY ADMINISTRATION
EASTERN FEDERAL LANDS HIGHWAY DIVISION
STERLING, VIRGINIA

BLUE RIDGE PARKWAY

PLAN VIEW

0 30 60
SCALE IN FEET

8/18/2008 8:58:32 AM m:\proj\eds\blri\2e15\proj_dev\cad\DD\blri2e15_plndgn

NPS NO.	REG	STATE	PROJECT	SHEET NO.
601 / 43,952	SE	NC	PRA-BLRI 2E15	D2

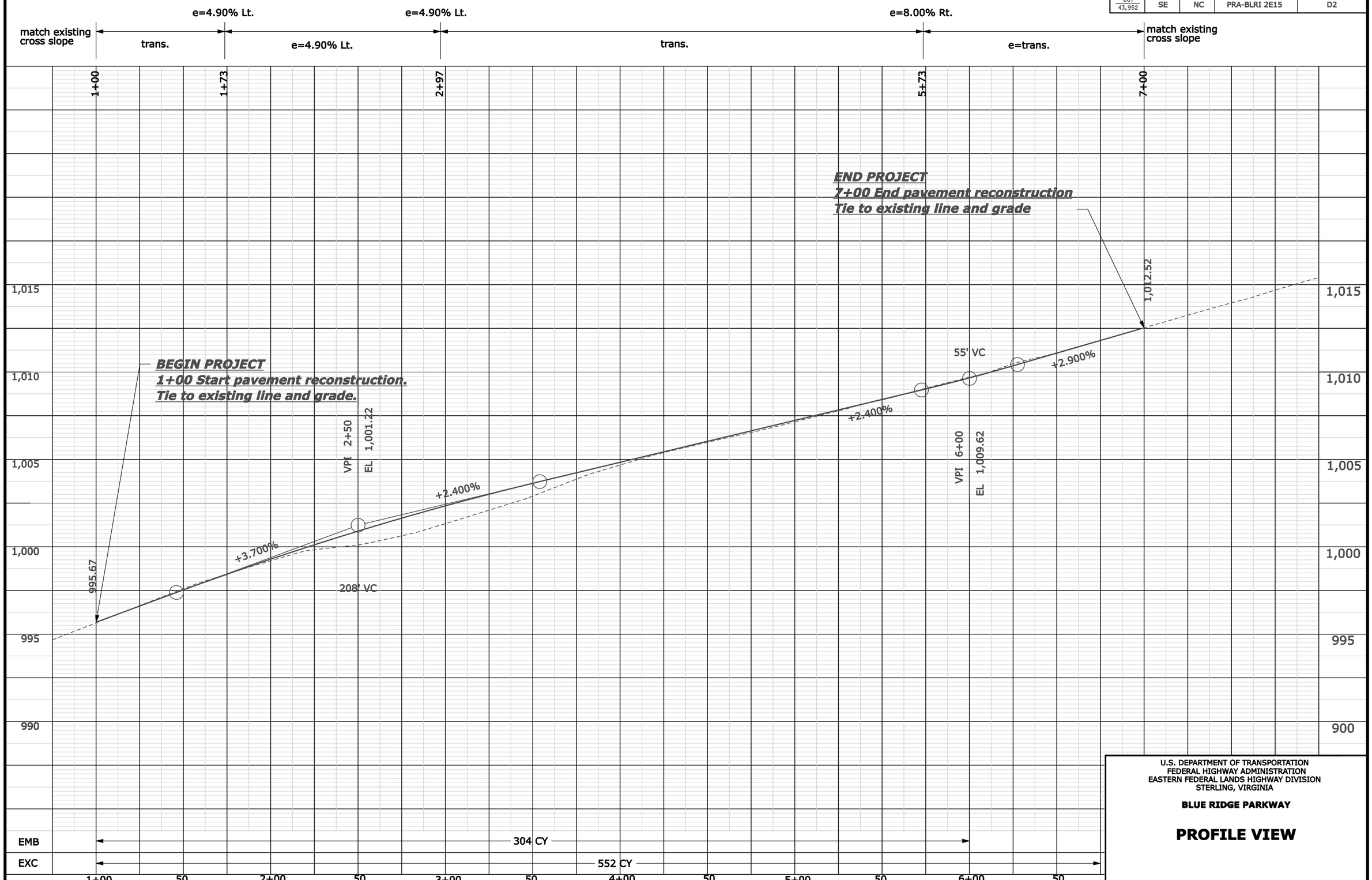

U.S. DEPARTMENT OF TRANSPORTATION
FEDERAL HIGHWAY ADMINISTRATION
EASTERN FEDERAL LANDS HIGHWAY DIVISION
STERLING, VIRGINIA

BLUE RIDGE PARKWAY

PROFILE VIEW

7/22/2008 2:07:07 PM m:\projects\blri\2el5\proj_dev\cadd\002-blri2el5_prf.dgn

NPS NO.	REG	STATE	PROJECT	SHEET NO.
601 / 43,952	SE	NC	PRA-BLRI 2E15	M1

I. GENERAL GUIDELINES

The Erosion Control Plans (ECP) are meant as a guideline for preventing erosion and controlling sediment. The work outlined in this narrative consists of applying measures throughout the life of the project to control erosion and minimize the sedimentation of rivers, streams, and/or impoundments such as lakes and reservoirs. The measures consist of stabilization and structural practices, stormwater controls and other miscellaneous pollution prevention controls.

Install all erosion and sediment control measures as shown in the ECP or as directed by the Contracting Officer (CO). Do not modify the type, size, or location of any control or practice without approval from the CO. Inspect all sediment control measures daily and immediately after any rainfall event. Repair measures daily once damage to measures is discovered.

Preventing initial soil erosion is much more effective than trying to control eroded sediment. Therefore, stabilize all disturbed areas as soon as is practical, but no more than 14 days after construction activity has temporarily or permanently ceased. Except for perimeter control measures which shall be installed prior to the start of any clearing, grubbing or grading activity, install temporary controls in incremental stages as construction proceeds.

Control only sediment-laden runoff generated by the project site. Separate and quickly route clean, offsite runoff through the project by using earth diversion berms, diversion channels, and culverts.

Do not allow construction vehicles to track sediment offsite of the project limits.

Do not allow any construction equipment to operate or access on the downslope side of perimeter control measures.

In general, preserve existing vegetation, trees, and shrubs when possible, as directed by the CO.

At the end of each day's grading operations, shape earthwork to minimize erosion from storm runoff.

Where necessary, reapply damaged bonded fiber matrix and reapply permanent turf establishment to disturbed areas where vegetation has not established.

Remove silt fence, diversion dikes and sediment traps only after all upslope areas are stabilized and vegetation is well established.

Total disturbed area : 1.5 acres

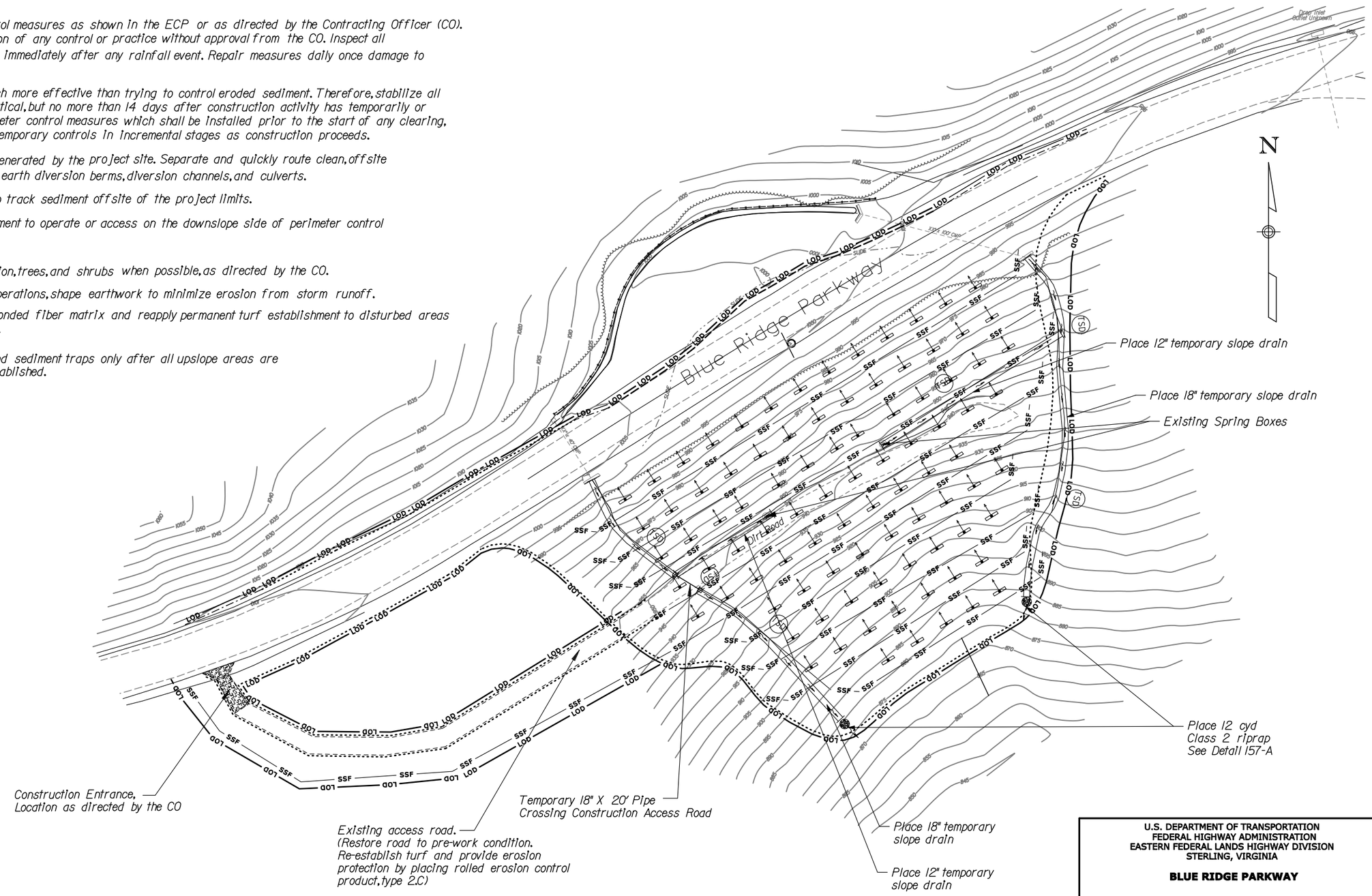

U.S. DEPARTMENT OF TRANSPORTATION
FEDERAL HIGHWAY ADMINISTRATION
EASTERN FEDERAL LANDS HIGHWAY DIVISION
STERLING, VIRGINIA

BLUE RIDGE PARKWAY

EROSION CONTROL PLAN

0 30 60
SCALE IN FEET

8/18/2008 8:58:39 AM m:\projects\blri\2el5\proj_dev\cadd\M01-blri2el5_ab&.dgn

NPS NO.	REG	STATE	PROJECT	SHEET NO.
601 / 43,952	SE	NC	PRA-BLRI 2E15	N1

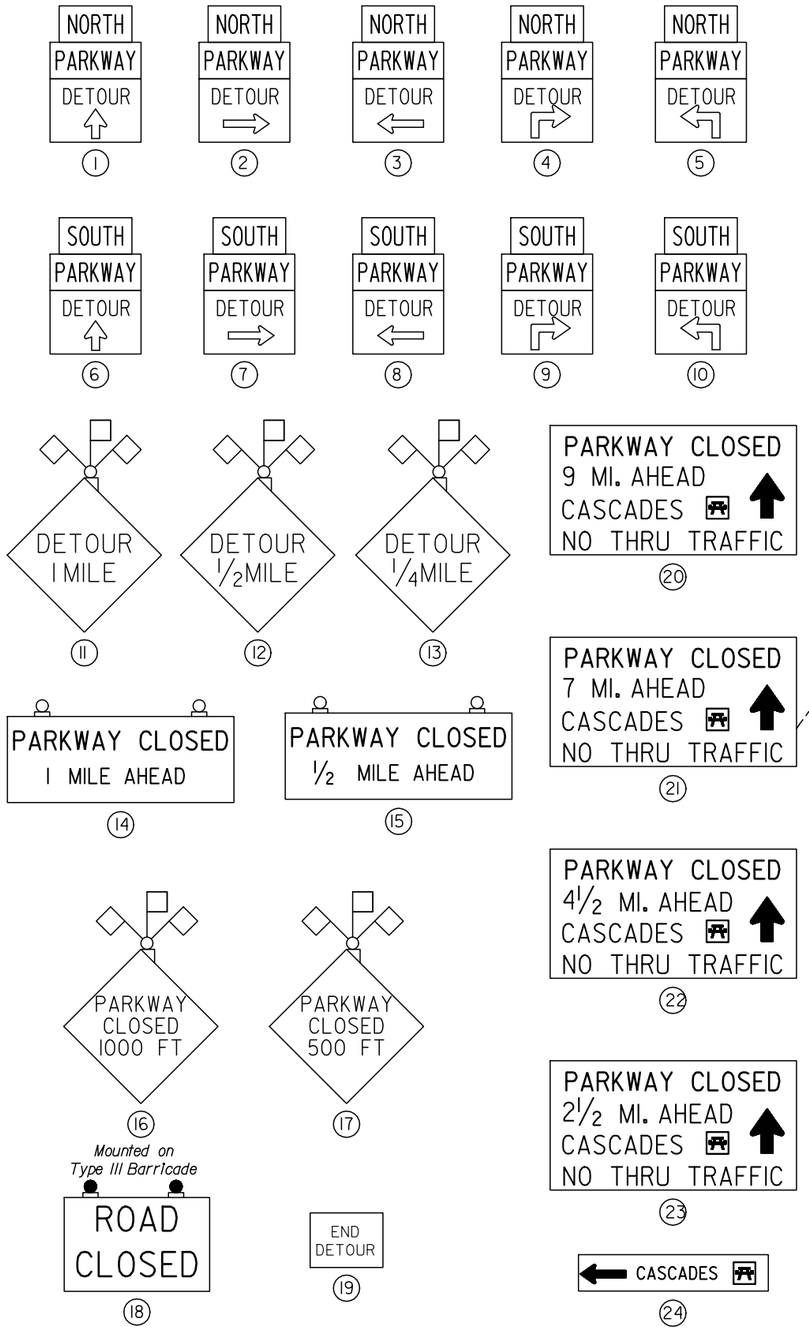

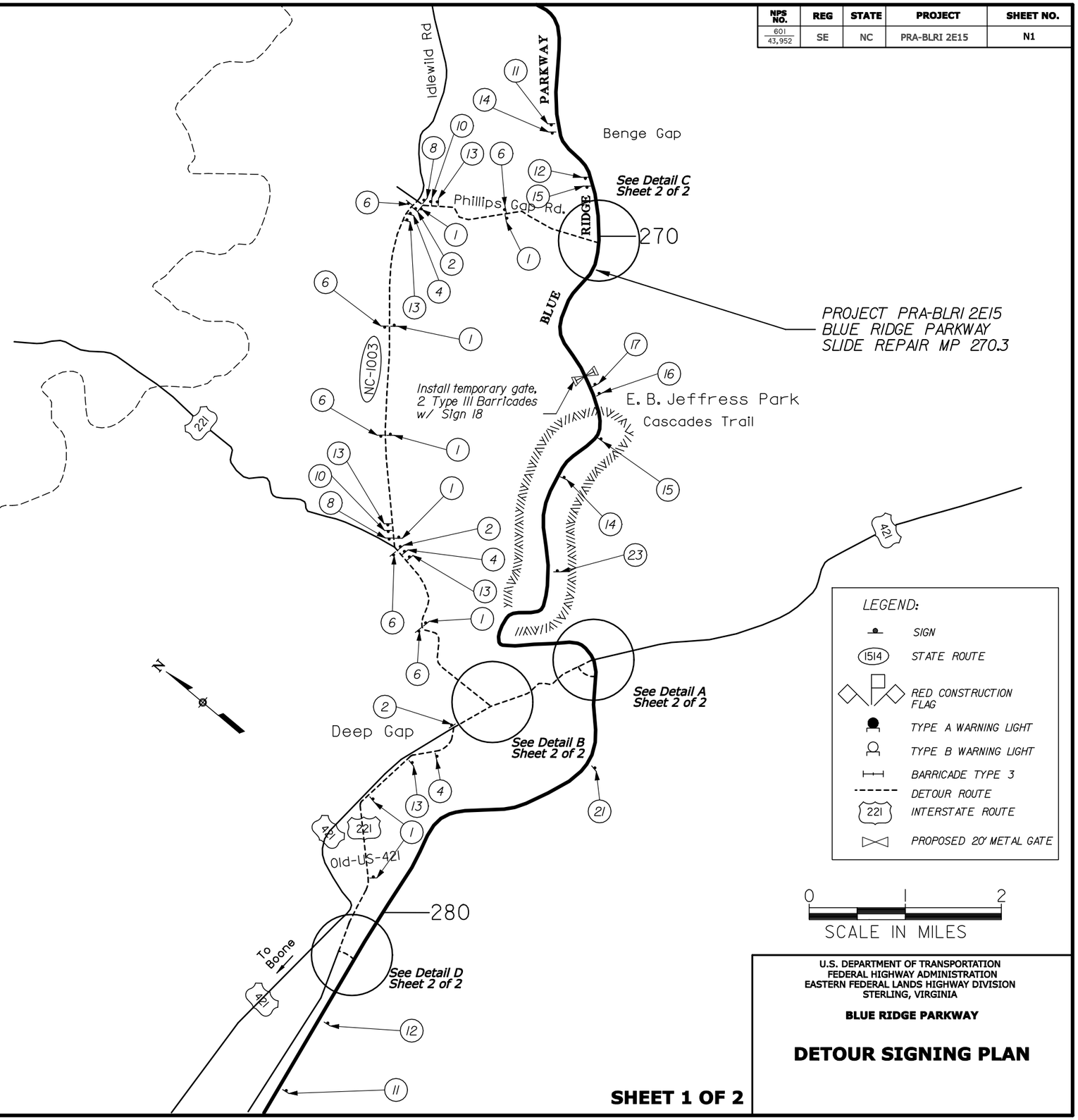

U.S. DEPARTMENT OF TRANSPORTATION
FEDERAL HIGHWAY ADMINISTRATION
EASTERN FEDERAL LANDS HIGHWAY DIVISION
STERLING, VIRGINIA

BLUE RIDGE PARKWAY

DETOUR SIGNING PLAN

SHEET 1 OF 2

7/22/2008 2dTdT PM m:\projects\blri\2e15\proj_dev\cadd\N01-blri2e15_1cpudgn

NPS NO.	REG	STATE	PROJECT	SHEET NO.
601 / 43,952	SE	NC	PRA-BLRI 2E15	N2

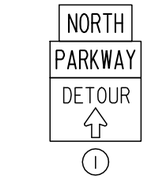

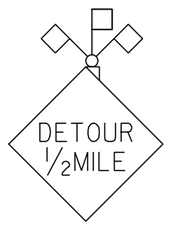

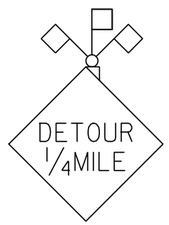

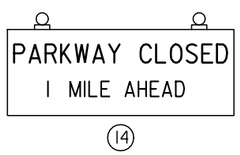

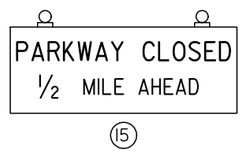

Mounted on Type III Barricade

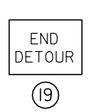

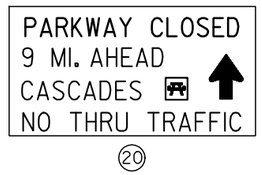

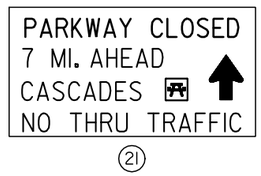

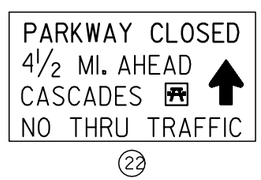

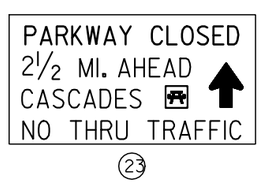

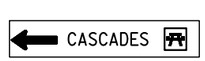

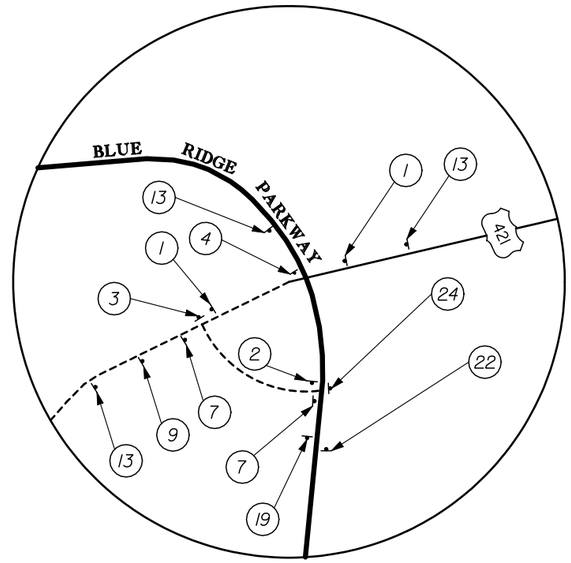

Detail A

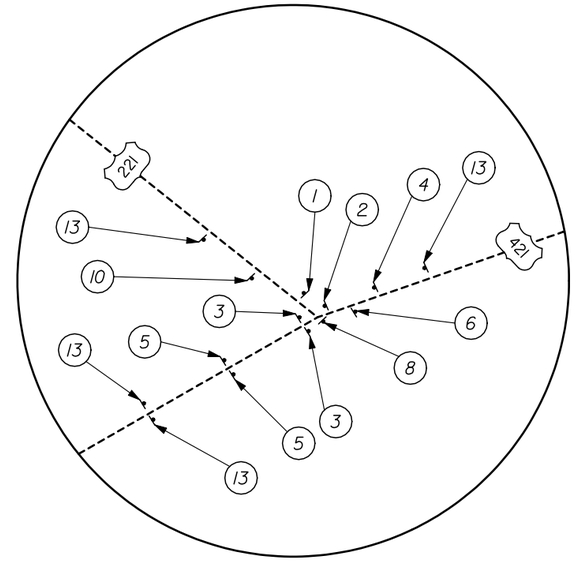

Detail B

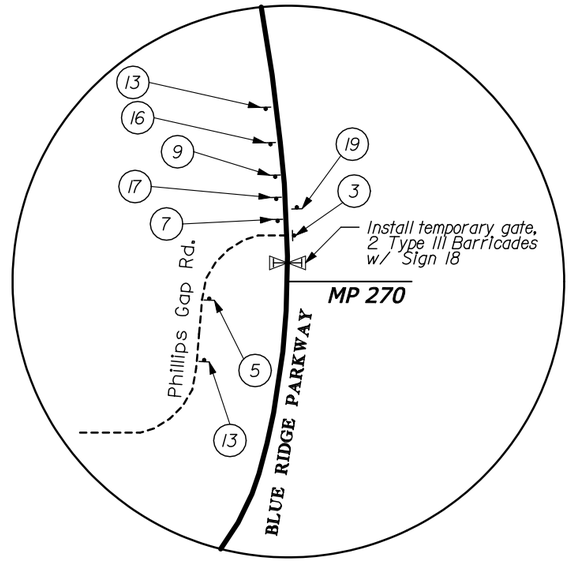

Detail C

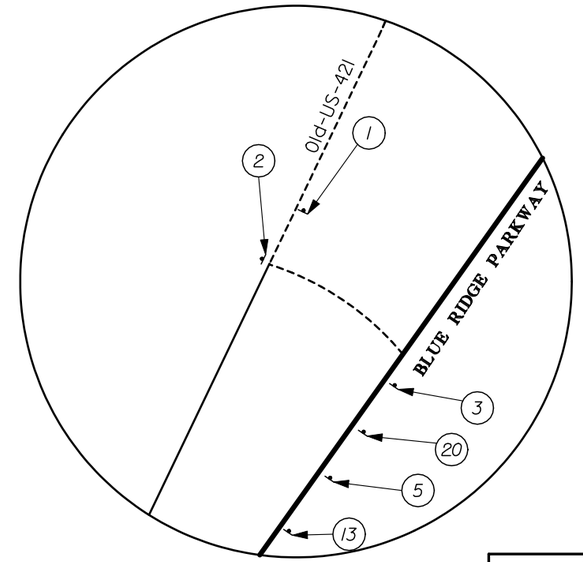

Detail D

LEGEND:

- SIGN
- 1514 STATE ROUTE
- RED CONSTRUCTION FLAG
- TYPE A WARNING LIGHT
- TYPE B WARNING LIGHT
- BARRICADE TYPE 3
- DETOUR ROUTE
- 221 INTERSTATE ROUTE
- PROPOSED 20' METAL GATE

U.S. DEPARTMENT OF TRANSPORTATION
FEDERAL HIGHWAY ADMINISTRATION
EASTERN FEDERAL LANDS HIGHWAY DIVISION
STERLING, VIRGINIA

BLUE RIDGE PARKWAY

DETOUR SIGNING PLAN

SHEET 2 OF 2

7/22/2008 2:07:20 PM m:\proj\acts\blri\2e15\proj_dev\cadd\NO-blri2e15_fcpd.dgn

NPS NO.	REG	STATE	PROJECT	SHEET NO.
601 / 43,952	SE	NC	PRA-BLRI 2E15	S1

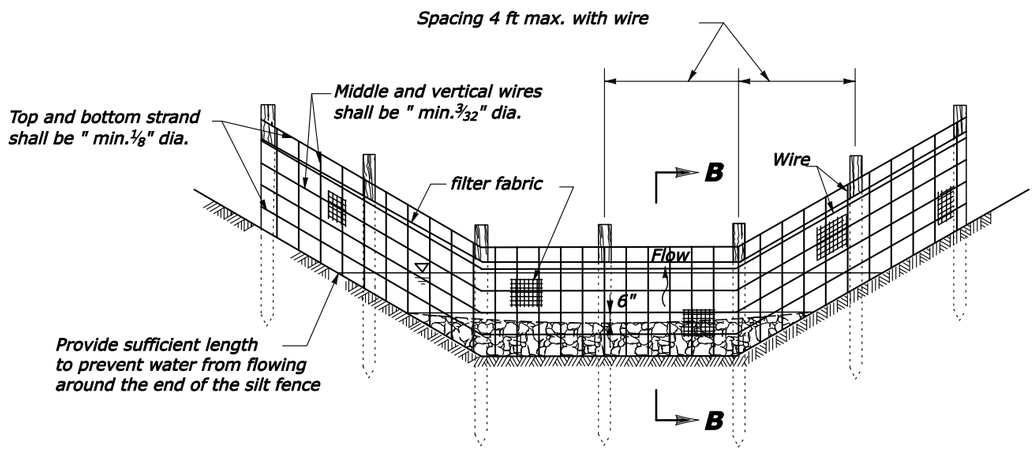

WIRE-BACKED SILT FENCE CHECK DAM

(See note 2)

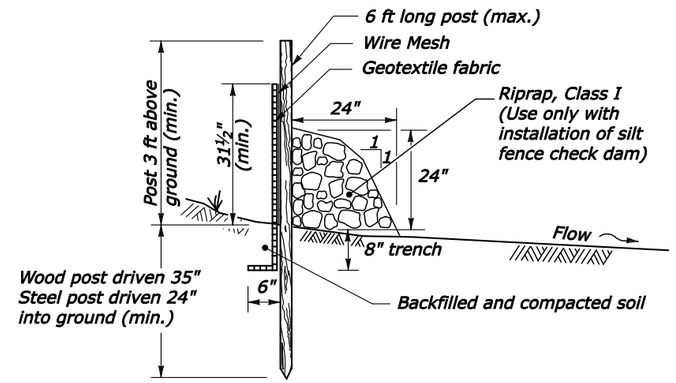

SECTION B-B

NOTES:

1. Use silt fence check dam installation for low flow conditions only when specified on Erosion Control Plan.
2. Alternate pre-assembled silt fence options will be allowed as long as specified minimums are satisfied. Follow manufacturer's information for installation procedures.
3. Wire mesh shall be a minimum of 32 inches in width and shall have a minimum of 6 line wires with 12 inch stay spacing.
4. Filter fabric shall be a minimum of 45 inches in width and shall be fastened adequately to the wire as directed by the CO.
5. Steel post shall be 60 inches minimum in height and be of the self-fastener angle steel type.
6. Wood post shall be 70 inches minimum in height and 3 inches in diameter.
7. Extend wire and fabric into trench.

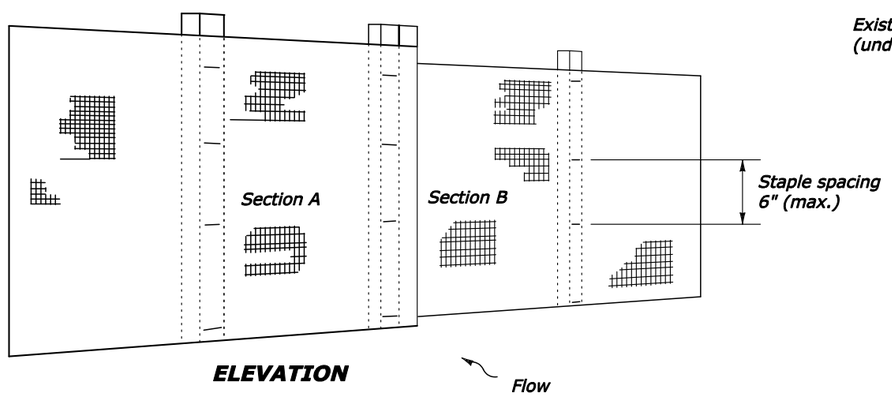

ELEVATION

Flow

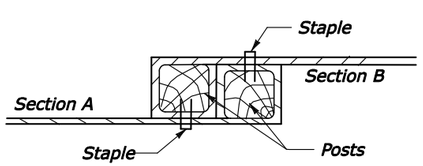

PLAN

JOINING TWO ADJACENT SILT FENCE SECTIONS

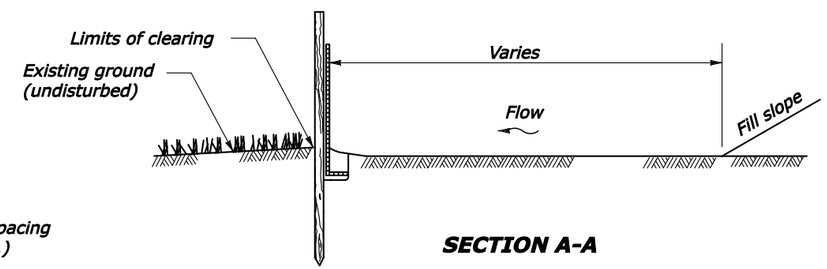

SECTION A-A

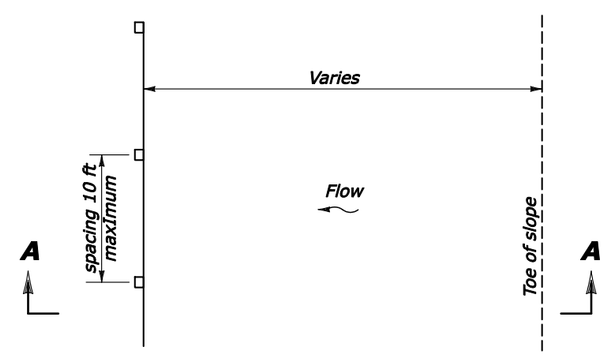

PLAN

WIRE-BACKED SILT FENCE INSTALLATION AT TOE OF FILL

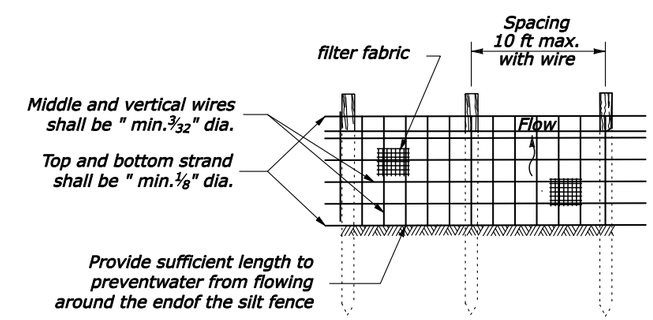

ELEVATION

NO SCALE

U.S. DEPARTMENT OF TRANSPORTATION
FEDERAL HIGHWAY ADMINISTRATION
EASTERN FEDERAL LANDS HIGHWAY DIVISION

U.S. CUSTOMARY DETAIL

WIRE-BACKED SILT FENCE

DETAIL APPROVED FOR USE

REVISED: 06/99 04/07

DETAIL E157-02

7/17/2008 4:30:12 PM M:\Projects\blri\2el5yro_dev\CADD\Std-Det\sfl5702_detail.dgn

NPS NO.	REG	STATE	PROJECT	SHEET NO.
601 / 43,952	SE	NC	PRA-BLRI 2E15	S2

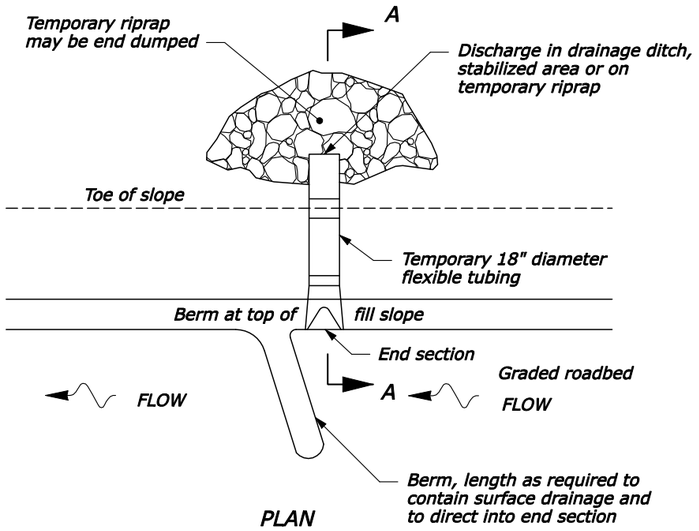

SLOPE DRAINS

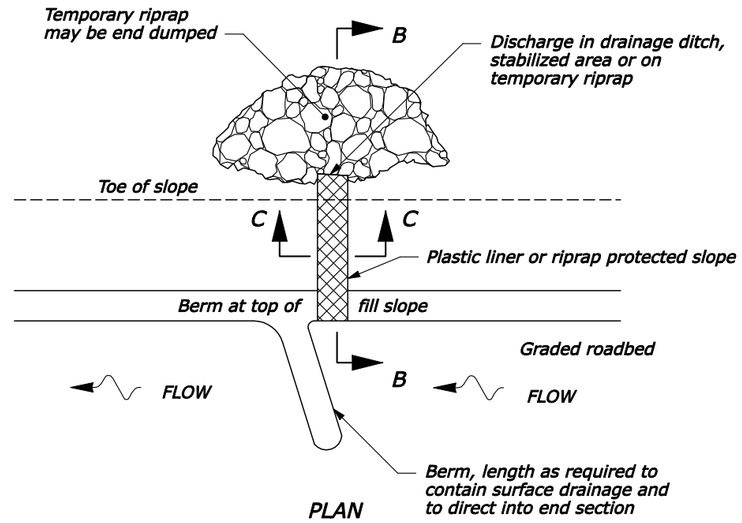

PLASTIC LINED WATERWAY

NOTE:

1. Use temporary slope drains (berms, drains, and riprap) as the embankment is constructed. Use spacings as shown on the Erosion Control Plans or as designated by the CO. Place all slope drains at the end of each work shift. Use slope drains until the slopes are permanently stabilized.
2. Construct temporary berms at the top of all erodible cut slopes as shown on the Erosion Control Plans or as designated by the CO. Use check dams to reduce the runoff velocity when existing grades are steep.
3. Do not use transverse or longitudinal joints in plastic liner. Plastic liner is not required for rock embankments.
4. Use toe-of-fill slope berms to divert offsite runoff away from disturbed areas.
5. Seed and mulch all cut slope berms and toe-of-fill berms immediately after berm construction.
6. Use Class 2 temporary riprap.

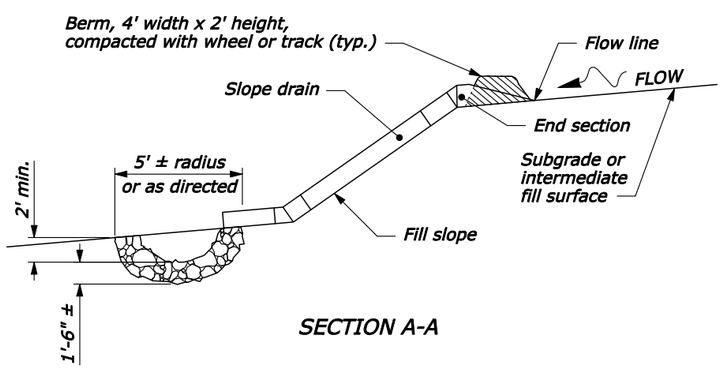

SECTION A-A

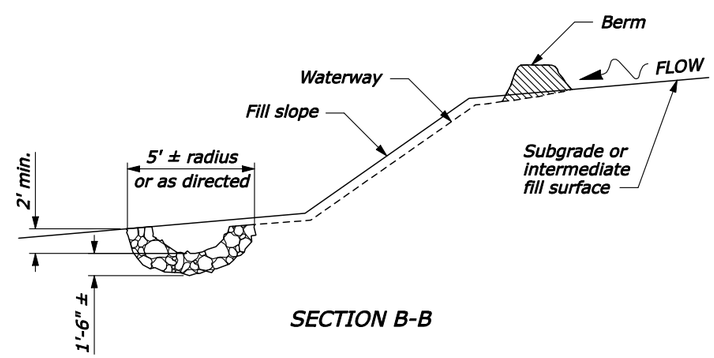

SECTION B-B

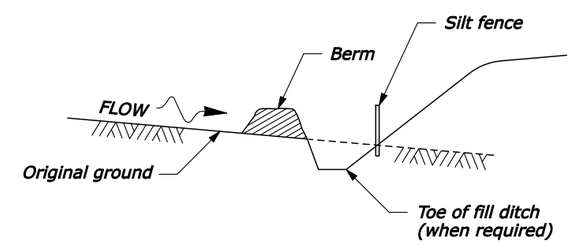

TOE-OF-FILL SLOPE BERM

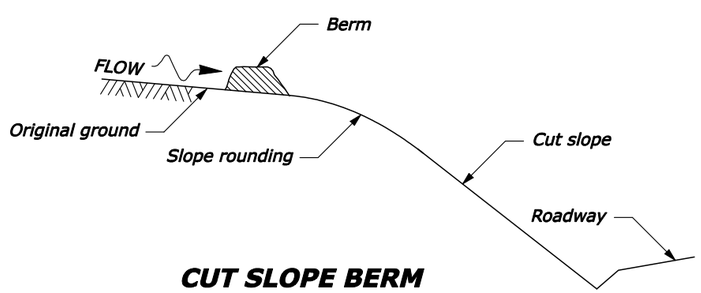

CUT SLOPE BERM

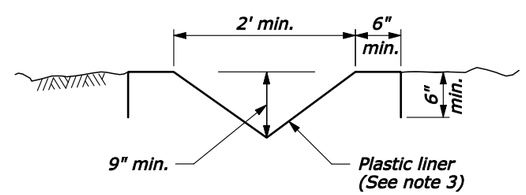

SECTION C-C

NO SCALE

U.S. DEPARTMENT OF TRANSPORTATION
FEDERAL HIGHWAY ADMINISTRATION
FEDERAL LANDS HIGHWAY

U.S. CUSTOMARY DETAIL

TEMPORARY EROSION CONTROL BERMS, SLOPE DRAINS, AND LINED WATERWAYS

STANDARD APPROVED FOR USE #/####

REVISED:

DETAIL 157-A

7/22/2008 2:07:35 PM m:\pro\bets\blri\2e15\pro1_dev\cadd\Std-Det\sh157d7_detail.dgn

NPS NO.	REG	STATE	PROJECT	SHEET NO.
601 / 43,952	SE	NC	PRA-BLRI 2E15	S3

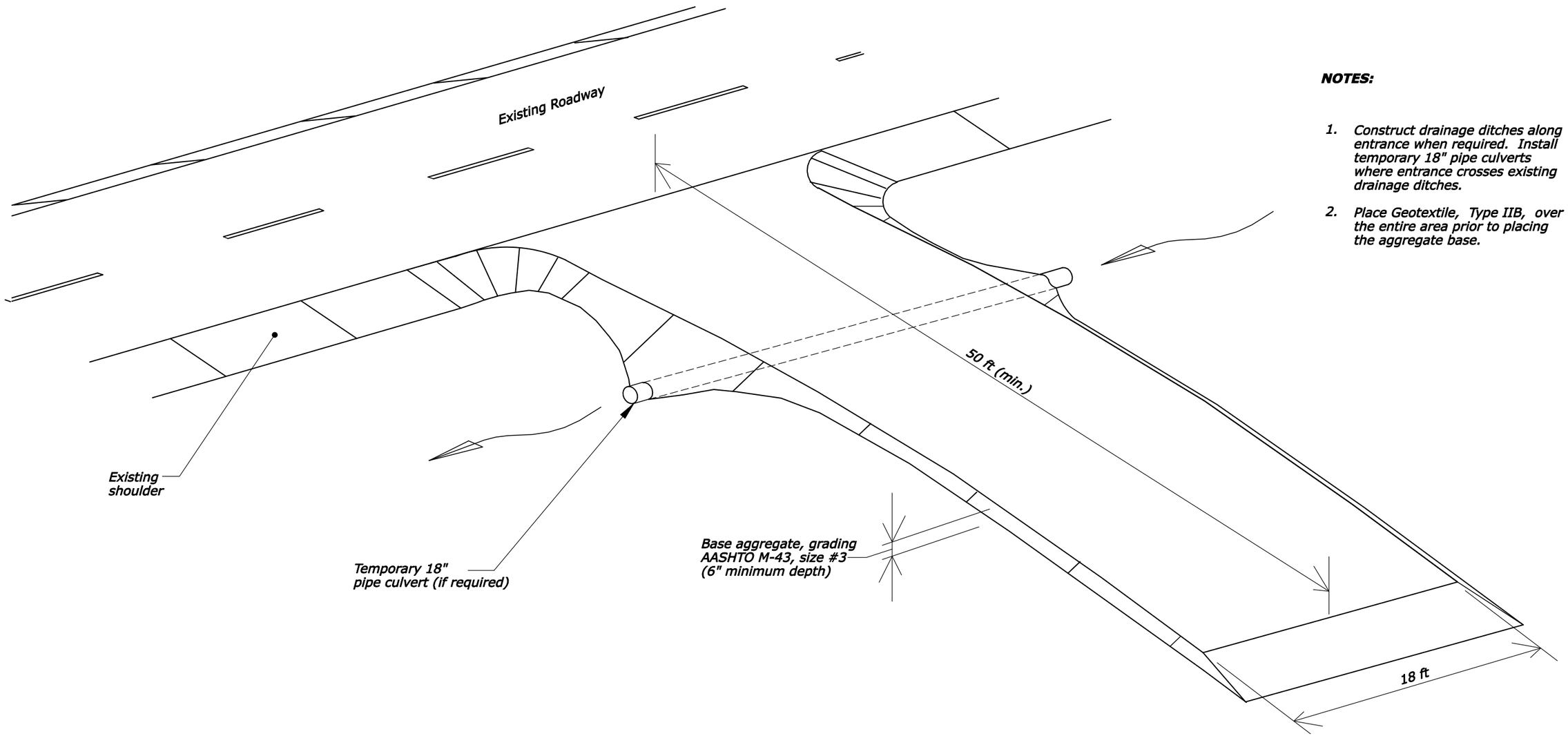

NOTES:

1. *Construct drainage ditches along entrance when required. Install temporary 18" pipe culverts where entrance crosses existing drainage ditches.*
2. *Place Geotextile, Type IIB, over the entire area prior to placing the aggregate base.*

NO SCALE

U.S. DEPARTMENT OF TRANSPORTATION
FEDERAL HIGHWAY ADMINISTRATION
EASTERN FEDERAL LANDS HIGHWAY DIVISION

U.S. CUSTOMARY DETAIL

STABILIZED CONSTRUCTION ENTRANCE

DETAIL APPROVED FOR USE

REVISED:

DETAIL
E157-B

7/22/2008 2:07:30 PM m:\projects\blri\2e15yro_dev\cadd\Std-Def\stl5701_detail.dgn

NPS NO.	REG	STATE	PROJECT	SHEET NO.
601 / 43,952	SE	NC	PRA-BLRI 2E15	S4

Notes:

1. *Place temporary silt fence below each anchor block excavation. Remove only where it interferes with construction or after turf is established.*

2. *Use excavated material as backfill as approved by the CO*

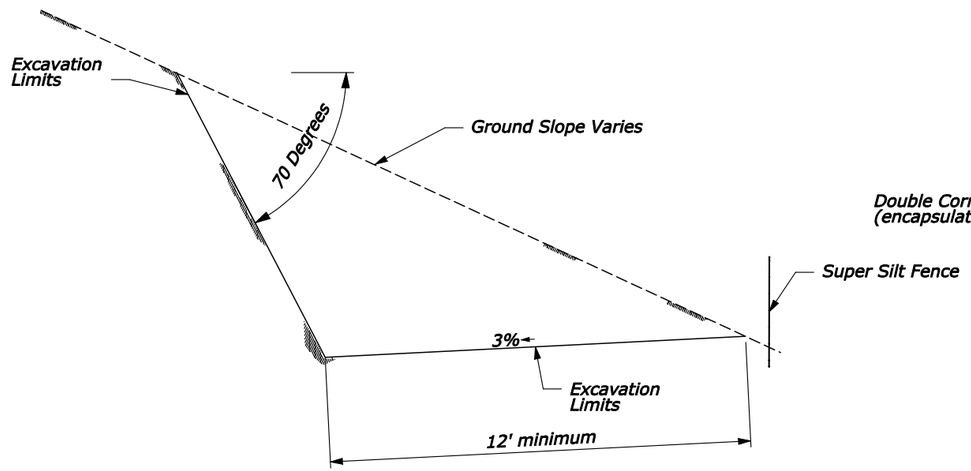

1. Excavation for Anchor Blocks

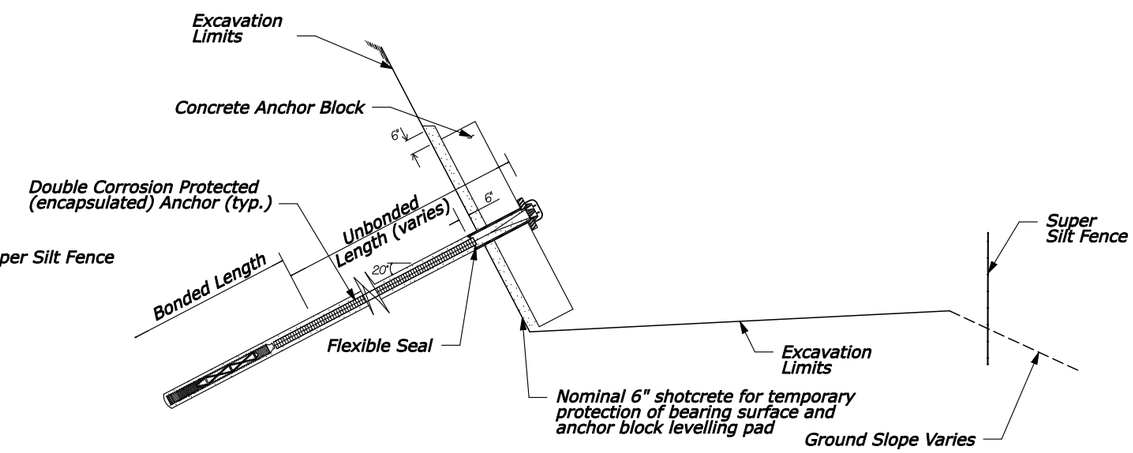

2. Installation of Anchor Blocks

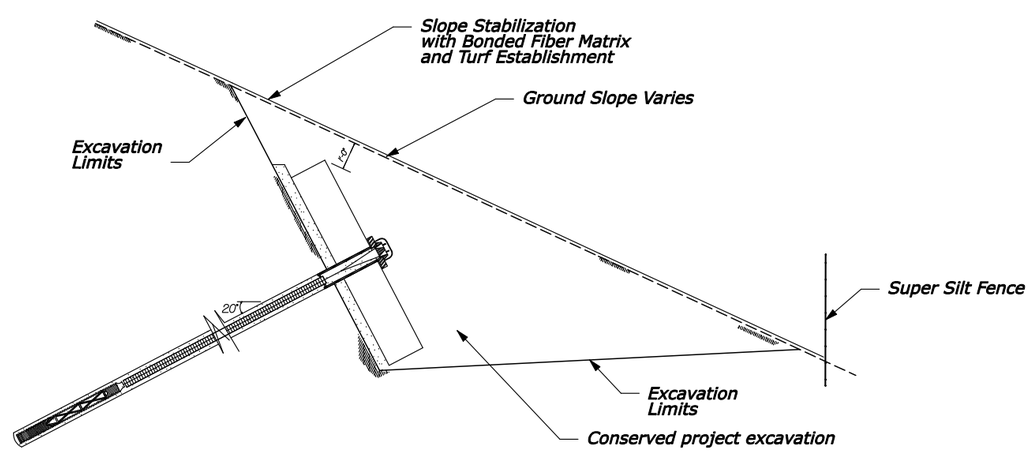

3. Fill and Placement of Slope Stabilizing Matting

U.S. DEPARTMENT OF TRANSPORTATION
FEDERAL HIGHWAY ADMINISTRATION
EASTERN FEDERAL LANDS HIGHWAY DIVISION

U.S. CUSTOMARY DETAIL

ANCHOR EXCAVATION AND INSTALLATION PLAN

DETAIL APPROVED FOR USE 02/2007

REVISED: 04/07

DETAIL E208-A

7/22/2008 2:07:42 PM m:\projects\blri\2el5\proj_dev\cadd\Std-Dwfs\E208A_detail.dgn

NPS NO.	REG	STATE	PROJECT	SHEET NO.
601 / 43,952	SE	NC	PRA-BLRI 2E15	S5

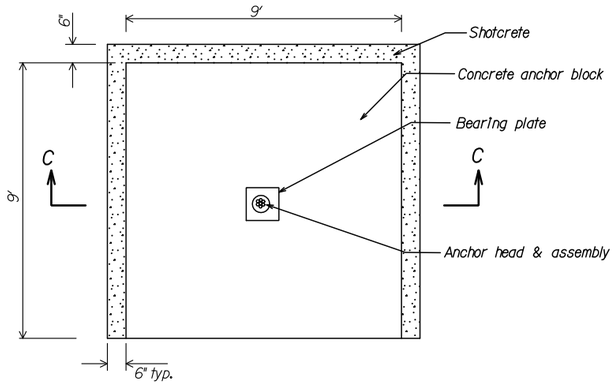

ANCHOR BLOCK PLAN VIEW
N.T.S.

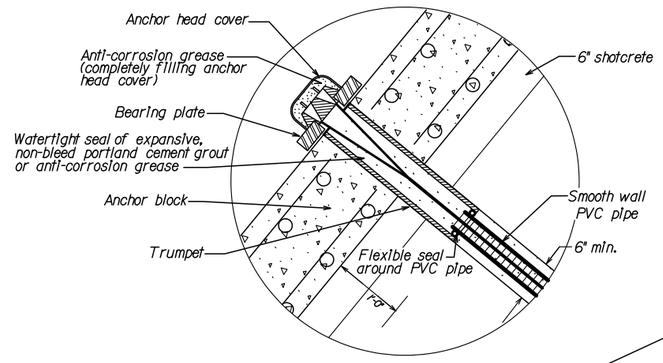

DETAIL 1
ANCHORAGE
N.T.S.

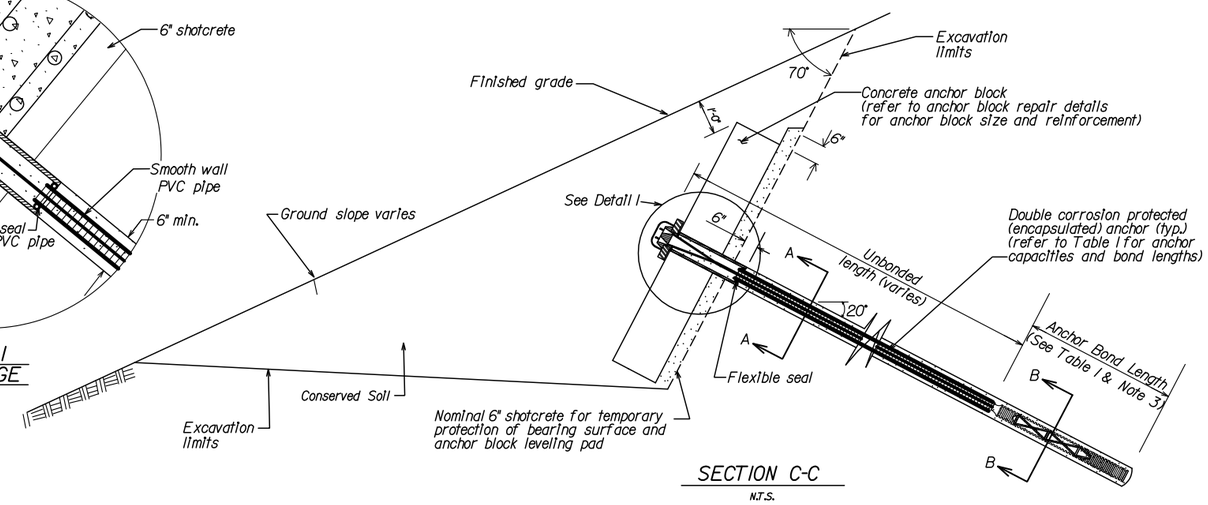

SECTION C-C
N.T.S.

TABLE 1

DESIGN ANCHOR CAPACITY (KIPS)	NUMBER OF 7-WIRE STRANDS (0.6"dia.) per anchor	TOTAL ANCHOR STRAND X-SECTION(IN^2)	ESTIMATED*3 MINIMUM ANCHOR BOND LENGTH(FT)	MINIMUM DRILL HOLE DIAMETER
PRODUCTION ANCHORS				
280K	8	1.74	27	6"
PERFORMANCE LOAD TESTED ANCHORS				
280K	8	1.74	27	6"

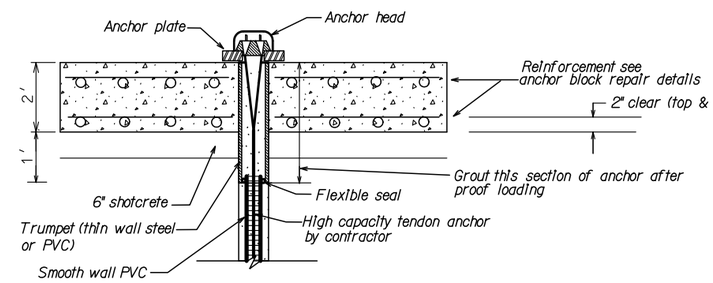

ANCHOR BLOCK SECTION
N.T.S.

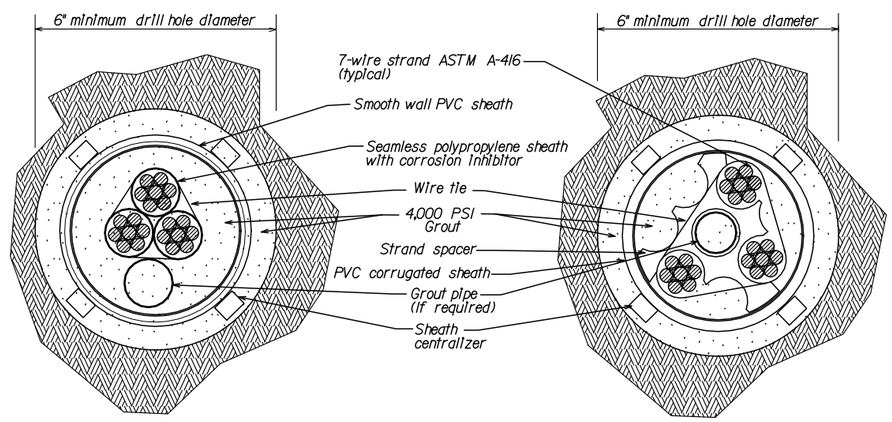

SECTION A-A
UNBONDED LENGTH
N.T.S.

SECTION B-B
UNBONDED LENGTH
N.T.S.

NOTE:
Typical three 7-wire strand arrangement shown above. actual number of anchor strands not shown for clarity.

NOTES:

1. Use ASTM-416 high strength steel (FPU=270 KSI, nominal As=0.22 sq in per 7-wire strand)
2. At the direction of the CO, carefully remove any soft soils, rock pinnacles, ledges, or other unsuitable material from the anchor block face to a depth of 6" behind the face and shotcrete to provide a 6" thick leveling pad for the anchor block. Replace any material disturbed beyond a depth of 6" with shotcrete at no additional cost.
3. Minimum anchor bond lengths are estimates only. Anchor capacity must be developed in unweathered rock. Select drilling equipment and methods that provide anchor bond zones of adequate length and diameter to meet or exceed the required anchor capacities. All equipment and methods will be subject to approval by the CO.

U.S. DEPARTMENT OF TRANSPORTATION
FEDERAL HIGHWAY ADMINISTRATION
EASTERN FEDERAL LANDS HIGHWAY DIVISION

DETAIL
ANCHOR BLOCK & ANCHORS

DETAIL APPROVED FOR USE XX/XX
REVISED: XX/XX

DETAIL
E256-A

7/22/2008 2:07:45 PM m:\projects\blri\2e15\pro_dev\cadd\Std-Det\std256A_detail.dgn

NPS NO.	REG	STATE	PROJECT	SHEET NO.
601 / 43,952	SE	NC	PRA-BLRI 2E15	S6

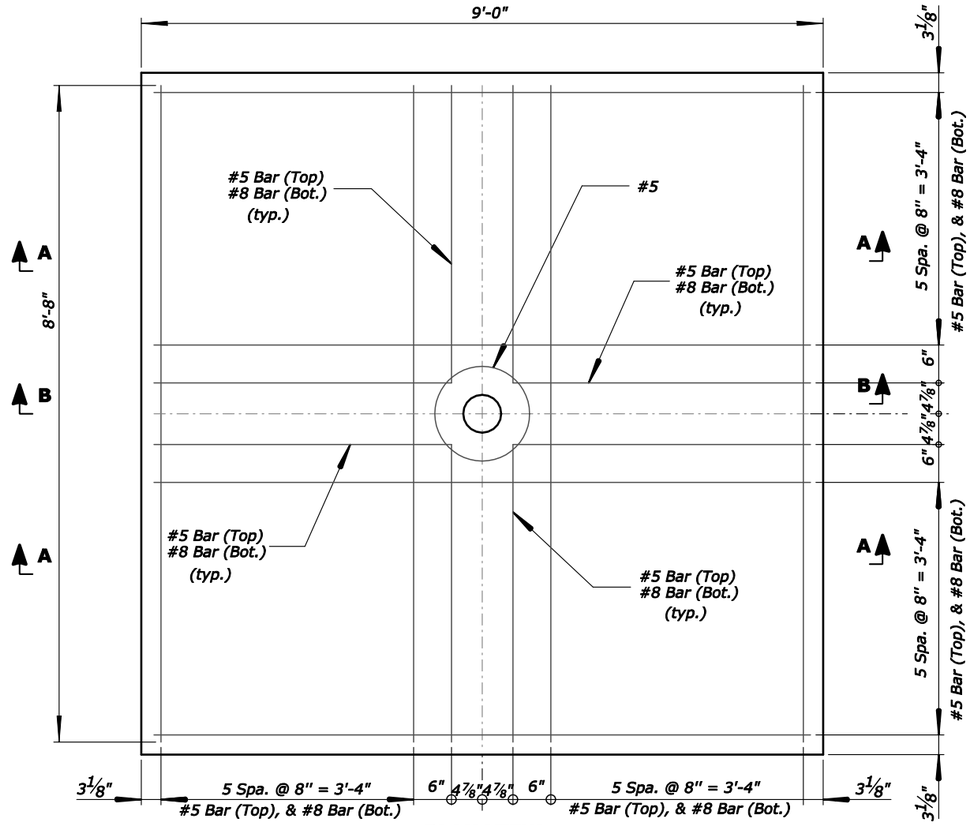

PLAN VIEW

(9' x 9' X 2'-0" Anchor Block shown)

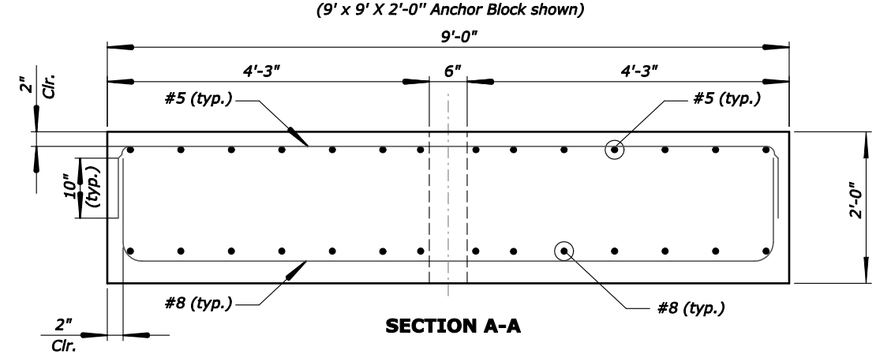

SECTION A-A

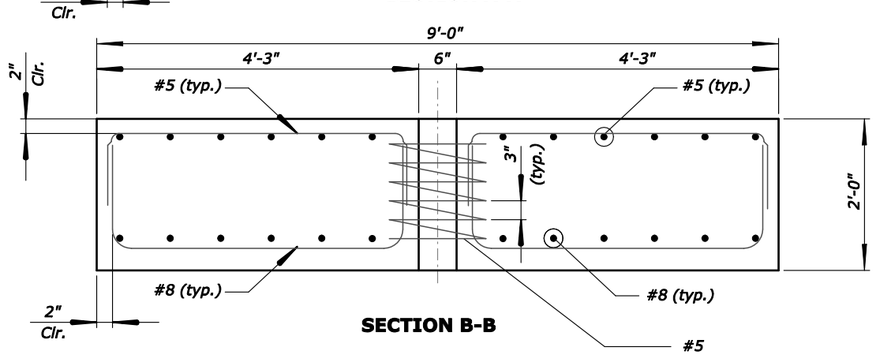

SECTION B-B

GENERAL NOTES

SPECIFICATIONS:

DESIGN:

AASHTO LRFD Bridge Design Specifications, 2007 with Interm Specifications.

DESIGN STRESSES:

Class A(AE) Concrete f'c = 4,000 psi at 28 days

Reinforcing Steel fy = 60,000 psi

CONCRETE:

Furnish Class A(AE) for all concrete.
Chamfer exposed corners 3/4" unless otherwise noted.

REINFORCING STEEL:

Furnish expoxy coated reinforcing steel.
Furnish reinforcing steel conforming to ASTM M31, Grade 60 deformed.
Provide 3 inches cover for reinforcing steel unless otherwise noted.

ESTIMATED QUANTITIES		
PER ANCHOR PAD		
Anchor block	Reinforcing Steel (Lbs.)	Concrete (Cu. Yds.)
9' x 9' x 2'-0"	2165	6

U.S. DEPARTMENT OF TRANSPORTATION
FEDERAL HIGHWAY ADMINISTRATION
EASTERN FEDERAL LANDS HIGHWAY DIVISION

DETAIL

ANCHOR BLOCKS

DETAIL APPROVED FOR USE XX/XX

REVISED: XX/XX

DETAIL E256-B

ACTUAL STANDARD FILE NAME: RI-BLRI2E15ANCHORBLOCKREBARDETS.DGN

NPS NO.	REG	STATE	PROJECT	SHEET NO.
601 / 43,952	SE	NC	PRA-BLRI 2E15	S7

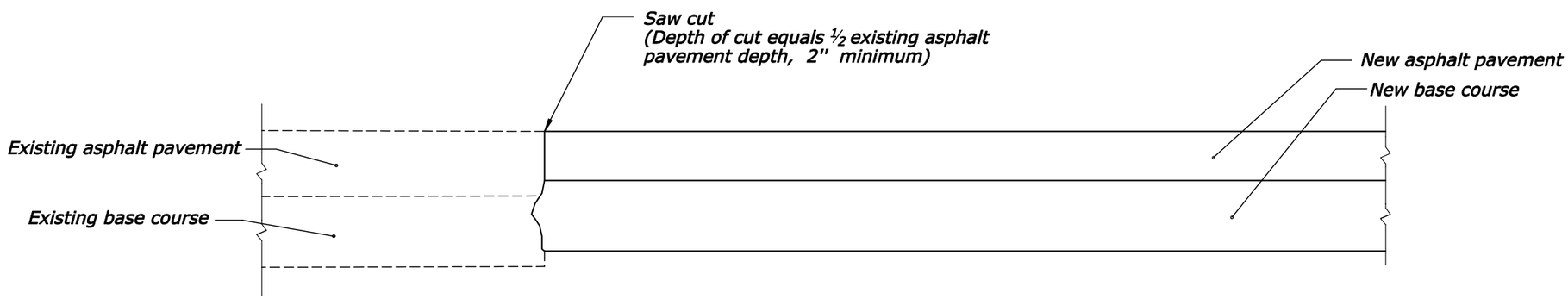

NEW PAVEMENT

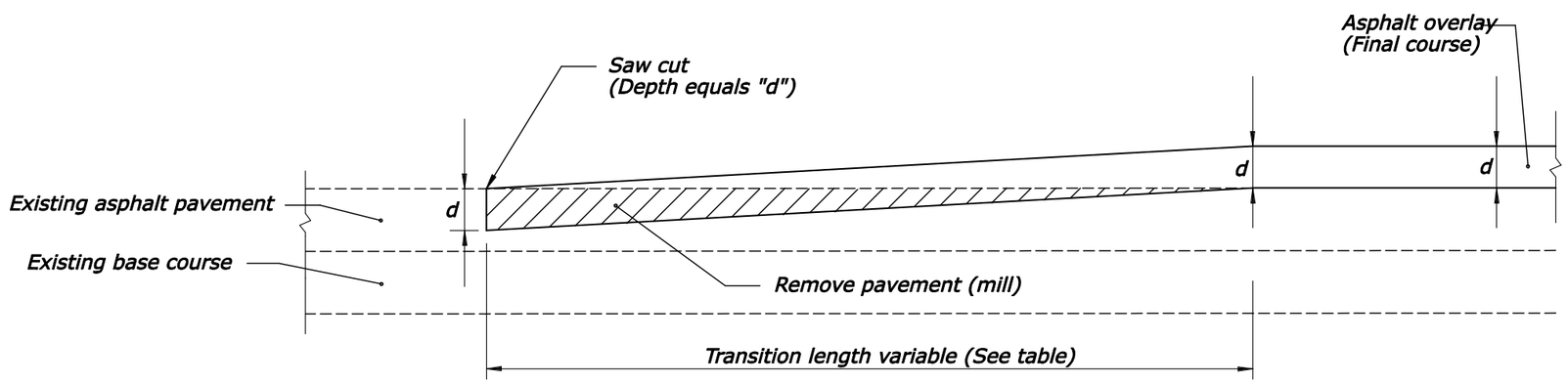

OVERLAY

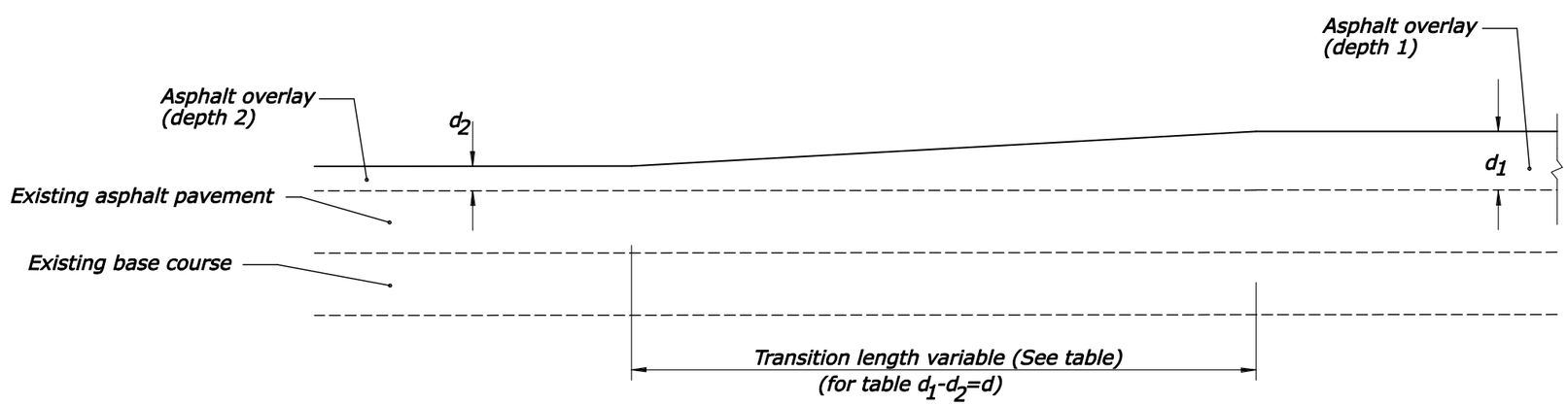

OVERLAY - DEPTH TRANSITIONS

d - Inches	Transition Length - Feet
1	20
1.5	30
2	40
2.5	50
3	60

NO SCALE

U.S. DEPARTMENT OF TRANSPORTATION
FEDERAL HIGHWAY ADMINISTRATION
EASTERN FEDERAL LANDS HIGHWAY DIVISION

U.S. CUSTOMARY DETAIL

PAVEMENT TRANSITIONS

DETAIL APPROVED FOR USE

REVISED: 07/07

DETAIL E401-01

7/22/2008 2:07:53 PM m:\projects\blri\2e15\proj_dev\cadd\Std-Dets\4010l_detail.dgn

NPS NO.	REG	STATE	PROJECT	SHEET NO.
601 / 43,952	SE	NC	PRA-BLRI 2E15	S8

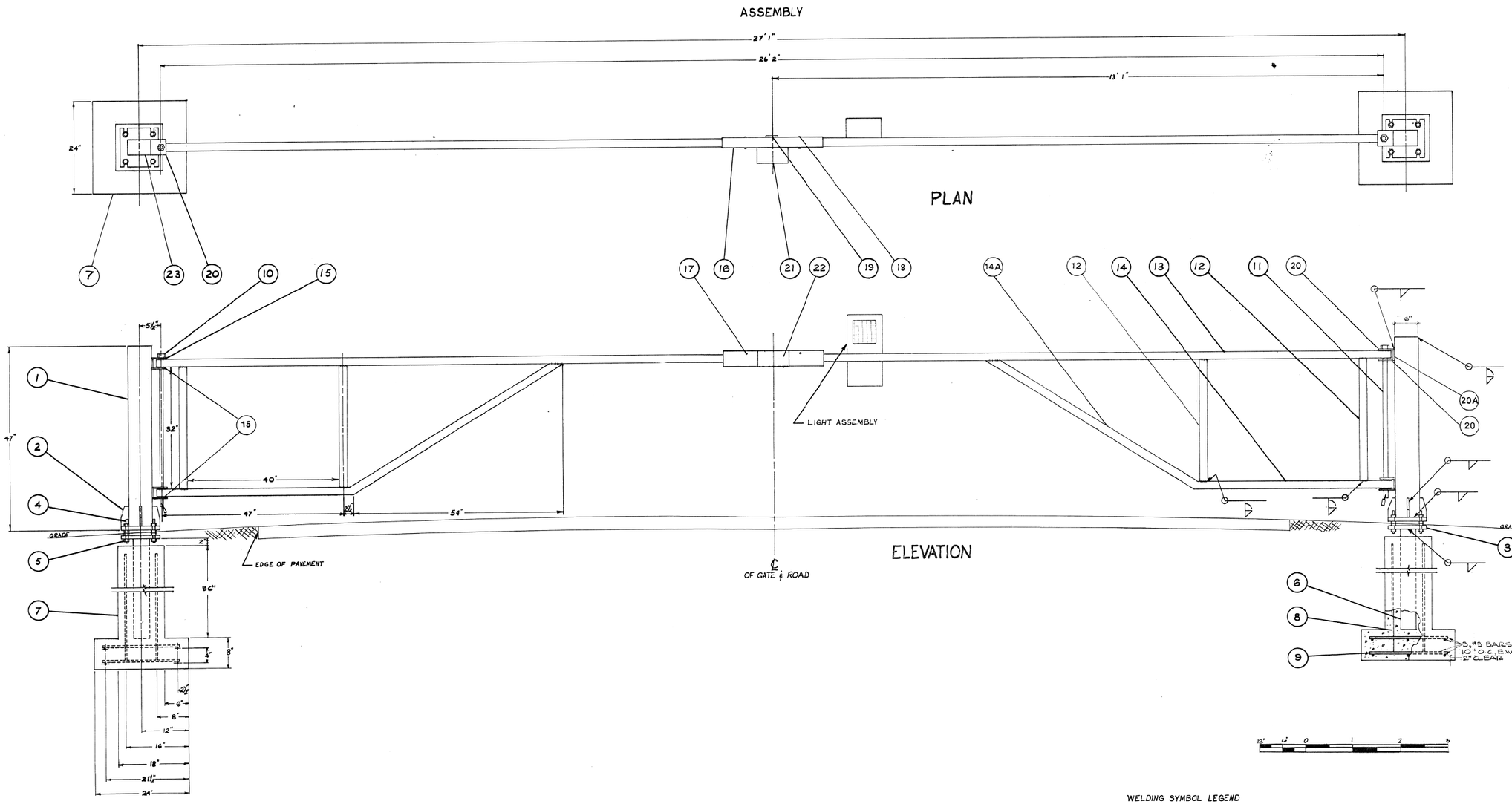

WELDING SYMBOL LEGEND

- WELD ALL AROUND
- WELD AROUND THE PERIMETER
- FILLET WELD

NOTES:

1. POSTS & RAILS TO BE PRIMED AND PAINTED WHITE.

BASIC DATA - REF. DWGS.- GEN 5383 A & B

Adapted from NPS Gate Detail GEN 601/60356

U.S. DEPARTMENT OF TRANSPORTATION
FEDERAL HIGHWAY ADMINISTRATION
EASTERN FEDERAL LANDS HIGHWAY DIVISION

U.S. CUSTOMARY DETAIL

GATE DETAIL

REVISED:

DETAIL 619-A

SHEET 1 OF 3

7/22/2008 2:08:32 PM m:\proj\edts\blri\2e15\proj_dev\cadd\std-det\stlGate.dgn

NPS NO.	REG	STATE	PROJECT	SHEET NO.
601 / 43,952	SE	NC	PRA-BLRI 2E15	S9

DETAILS

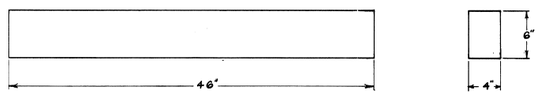

(1) POST

QTY. -(2) MAT'L.-CRS

MIN. WALL THICK. - 3/16"

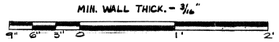

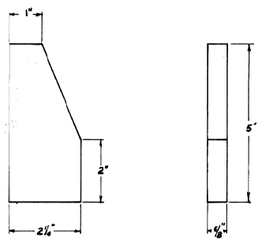

(2) SUPPORT PLATES

QTY. -(8) MAT'L.-CRS

SUB-ASSEMBLY — SLIDE & LOCK

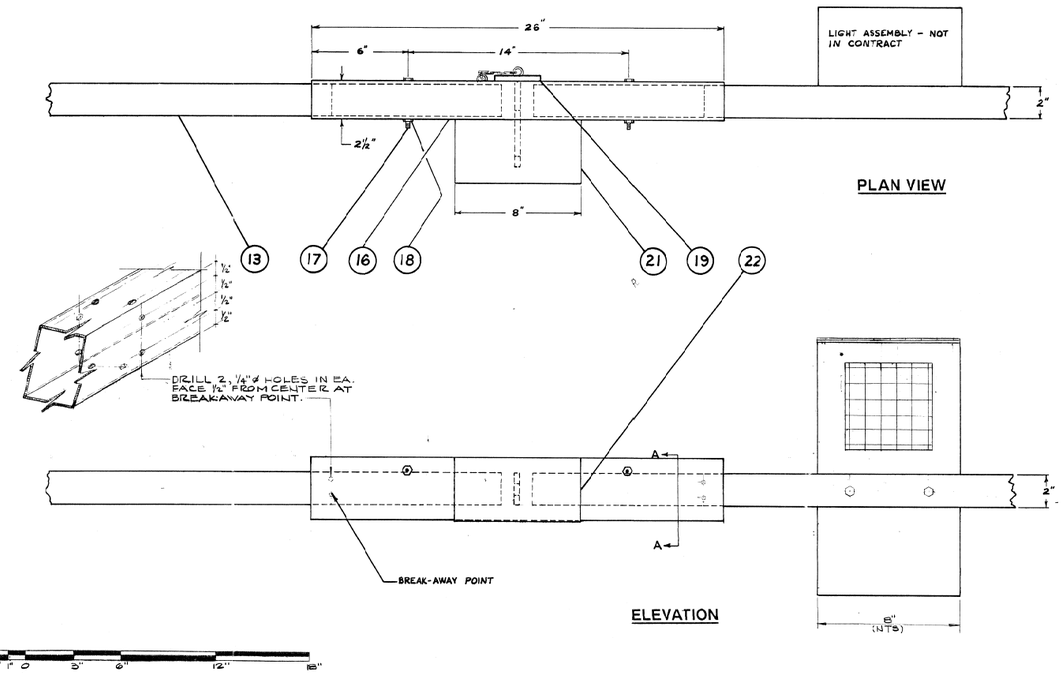

PLAN VIEW

ELEVATION

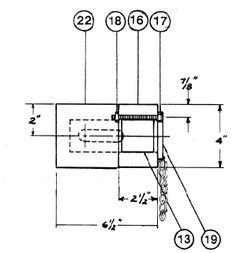

SECTION A - A

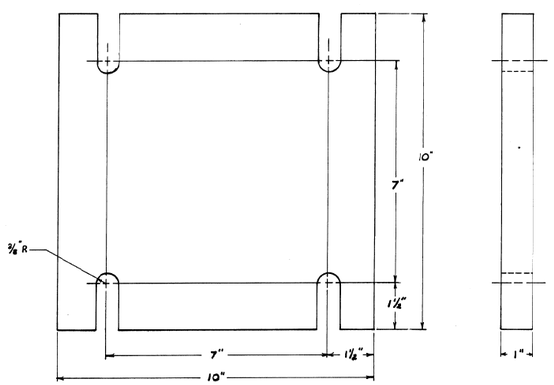

(3) LEVELING PLATE

QTY.-(4) MAT'L.-CRS

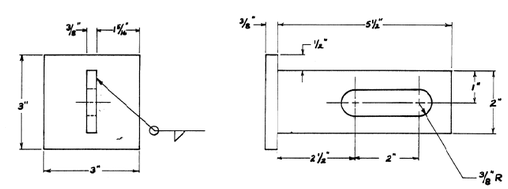

(19) LOCKING MECHANISM

QTY.-(1) MAT'L.-CRS

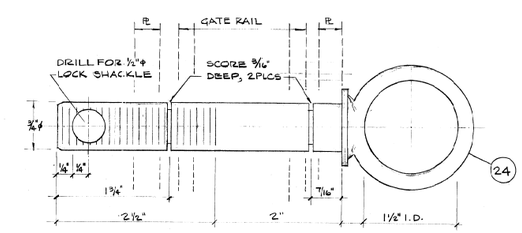

EYEBOLT SHEAR PIN

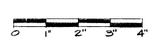

NOTE: CRS DENOTES COLD ROLLED STEEL.

Adapted from NPS Gate Detail GEN 601/60356

U.S. DEPARTMENT OF TRANSPORTATION
FEDERAL HIGHWAY ADMINISTRATION
EASTERN FEDERAL LANDS HIGHWAY DIVISION

U.S. CUSTOMARY DETAIL

GATE DETAIL

REVISED:

DETAIL 619-A

SHEET 2 OF 3

7/22/2008 2:08:22 PM m:\projects\blri\2e15\pro_dev\cadd\std-det\stlGateu.dgn

NPS NO.	REG	STATE	PROJECT	SHEET NO.
601 / 43,952	SE	NC	PRA-BLRI 2E15	S10

NOTE: LOWER SUPPORT BRACKET TO RECEIVE 1 1/16" ϕ HOLE ONLY.

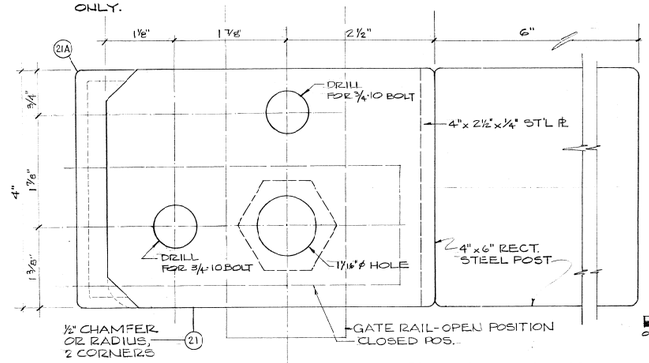

PLAN - GATE POST ASSEMBLY

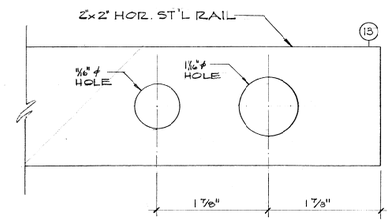

PLAN - END OF GATE RAIL

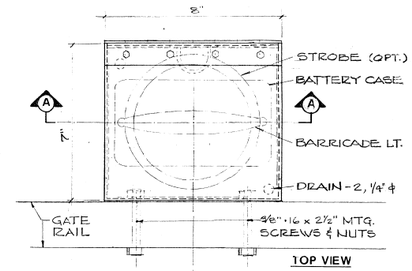

TOP VIEW

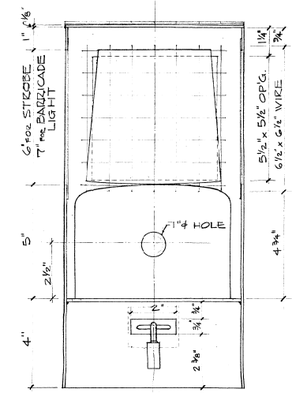

SECTION A - A

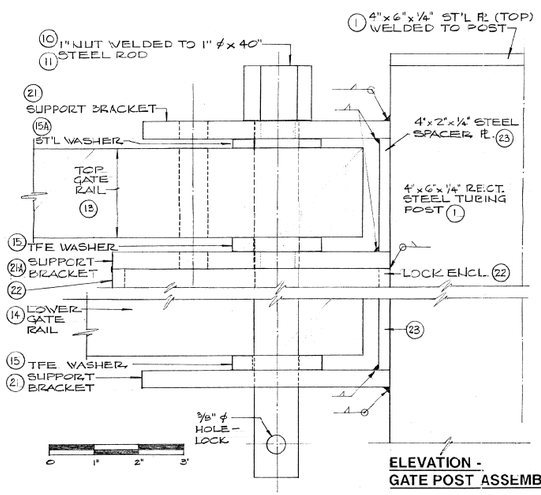

ELEVATION - GATE POST ASSEMBLY

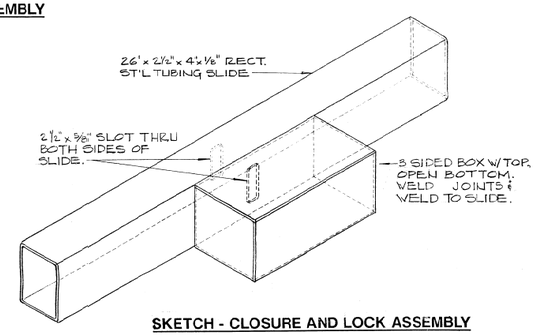

SKETCH - CLOSURE AND LOCK ASSEMBLY

BILL OF MATERIALS FOR LIGHT BOX

PART #	QUANT.	PART NAME	DESCRIPTION
1	1 EA	BOX FRONT AND BACK	*16" x 8" x 1/8" STEEL PLATE W/ 5 1/2" x 5 1/2" OPENING 1 1/2" DOWN FROM TOP & CENTERED HORIZONTALLY
2	2	BOX SIDES	**16" x **8 3/4" x 1/8" STEEL PLATE W/ 5 1/2" x 5" OPENING 1 1/2" DOWN FROM TOP & CENTERED HORIZONTALLY
3	4	WIRE CLOTH	6 1/2" x 6 1/2" PIECES GALV. STEEL WIRE CLOTH W/ 1" MESH & .120 DIA. WIRE (TACK WELDED BEHIND OPGS)
4	1	STAPLE	2 1/2" x 1 3/4" PLATE, 1 1/2" PROJECTION (WELDED TO BOX BACK IN LOCATION TO MATCH WITH #8)
5	1	TOP	7" x 8" x 1/8" STEEL PLATE
6	1	HINGE	8" x 2" HEAVY GALV. STEEL CONTINUOUS HINGE (WELDED OR BOLTED TO TOP AND BACK PLATES)
7	1	BATTERY SEAT	7 3/4" x 6 5/8" x 1/8" STEEL PLATE (WELDED IN WITH 1/8" SPACE AT BACK FOR STAPLE CLEARANCE)
8	1	LOCK PLATE	3 7/8" x 7 3/4" x 1/8" STEEL PLATE WITH 2" x 3/4" SLOT (SLOT LOCATION TO MATCH WITH # 4 STAPLE)
9	2 EA	SCREWS AND NUTS	3/8" - 16 x 2 1/2" GALV. STEEL HEX SCREWS AND NUTS (FOR MOUNTING BOX TO GATE)

* 17" LENGTH FOR BARRICADE TYPE LIGHTS
** 5 3/4" WIDTH FOR BARRICADE TYPE LIGHTS, NO SIDE OPENINGS REQUIRED.

NOTE:
PRIOR TO ATTACHING TO GATE RAIL, ALL SURFACES OF THE LIGHT BOX SHALL BE COATED WITH A METAL PRIMER AND 1 COAT OF HIGH QUALITY RUST PROOF HIGH GLOSS PAINT.

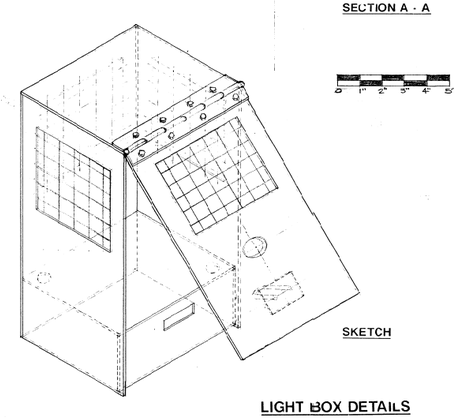

SKETCH

LIGHT BOX DETAILS

BILL OF MATERIALS FOR GATE

PART #	QUANTITY	PART NAME	DESCRIPTION AND NOTES
1	2	POST	4" x 6" RECTANGULAR STRUCTURAL STEEL TUBING
2	8	SUPPORT PLATES	5" x 2" x 5/8" NOM - SEE DETAIL SHT 2
3	4	LEVELING PLATE	10" x 10" x 1" STEEL PLATE - SEE DETAIL SHT 2
4	8	LEVELING STUDS	8" x 5/8" DIAMETER THREADED ROD
5	32	LEVELING NUTS	5/8"-11 STEEL HEX NUT
6	2	FOUNDATION CONNECTOR	4" x 4" SQUARE STRUCTURAL STEEL TUBING
7	2	COLUMN FOOTING	3000# AIR ENTRAINED CONCRETE
8	8	VERTICAL REBAR	# 3 BARS, 28" LONG
9	24	HORIZONTAL REBAR	#3 BARS, 20" LONG
10	2	HEX NUT	1"- 8 STEEL HEX NUT. WELD TO TOP OF GATE ROD
11	2	GATE ROD	1" DIA. STEEL ROD, 40" LONG. DRILL 3/8" DIA. HOLE 3/8" ABOVE BOTTOM OF ROD.
12	4	VERTICAL RAIL	2" x 2" x 1/4" STRUCTURAL STEEL TUBING. FOR GATE ASSEMBLY SEE ELEVATION, SHT 1 OF 3.
13	2	UPPER HORIZONTAL RAIL	2" x 2" x 1/4" STRUCTURAL STEEL TUBING
14	2	LOWER HORIZONTAL RAIL	2" x 2" x 1/4" STRUCTURAL STEEL TUBING
14A	2	ANGLED RAIL	2" x 2" x 1/4" STRUCTURAL STEEL TUBING
15	4	LOWER WASHER	1" DIAMETER TEFLON WASHER
15 A	4	UPPER WASHER	1" DIAMETER ZINC PLATED STEEL WASHER
16*	1	SLIDE	26" x 2 1/2" x 4" x 1/8" RECTANGULAR STEEL TUBING
17*	2	SLIDE BOLT	1/4"- 20 x 2 3/4" STEEL STEP BOLT
18*	2	SLIDE NUT	1/4"- 20 STEEL HEX NUT
19*	1	LOCKING MECHANISM	3/8" STEEL PLATE. 2 PC ASS'Y, WITH 12" +/- PIECE OF CHAIN ATTACHED TO PL & SLIDE. SEE DETAIL SHT 2.
20*	1	LOCK BOX	3 PC. ASS'Y. (1) 8" PIECE 4" x 4" x 1/4" STEEL ANGLE, (2) PIECES 4" x 4" x 1/4" STEEL PLATE. SEE DETAIL ON SHT 2 OF 3 FOR ASSEMBLY
21	6	4 UPPER AND 2 LOWER ROD SUPPORT PLATES	5 1/2" x 4" x 3/8" STEEL PLATE CUT & DRILLED AS SHOWN ON PLANS. WELD TO SPACER AND POST.
21A	2	2 LOWER PLATES - UPPER ROD SUPPORT ASSEMBLY	6" x 4" x 3/8" STEEL PLATE DRILLED AS SHOWN ON PLANS
22	2	LOCK ENCLOSURE	WELD 6" x 4" x 3/8" STEEL PLATE, PART # 22B, TO 6" x 4" x 3/16" x 3" LONG STRUCTURAL STEEL TUBING. WELD ASSY TO POST.
23	4	ROD PLATE SPACER	4" x 2 1/2" x 1/4" STEEL PLATE. WELD TO UPPER AND LOWER ROD SUPPORT PLATES AND POST.
24	2	LOCKING SHEAR PIN	1/2" x 4 1/2" GALV. STEEL EYE BOLTS WITH SHOULDER. SCORE BOLTS 2 PLACES TO ACT AS SHEAR PINS. DRILL 1/8" HOLE OC 1/4" ABOVE BOLT END FOR LOCK.

* SLIDE AND BOX ASSEMBLY PARTS MAY BE OMITTED IF LOCKING PINS ARE USED.

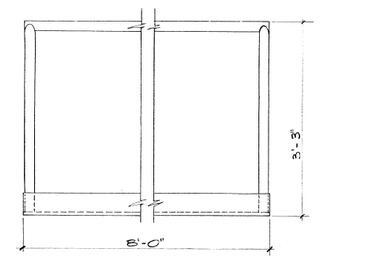

SIDE ELEVATION

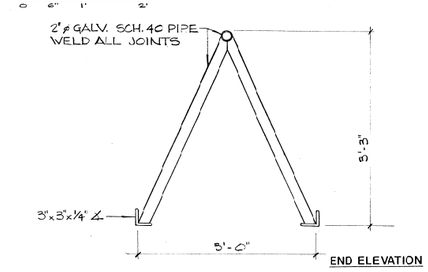

END ELEVATION

STORAGE SAW HORSES - 2 REQ'D

Adapted from NPS Gate Detail GEN 601 / 60356

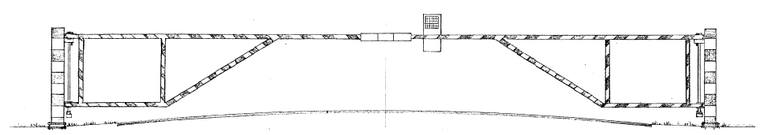

ELEVATION

STRIPING DETAIL

NOTE:

GATES SHALL BE COATED WITH A METAL PRIMER AND 1 COAT OF HIGH QUALITY WHITE RUST PROOF PAINT. STRIPES SHALL BE HIGH INTENSITY REFLECTIVE TAPE, ALTERNATELY ORANGE AND WHITE IN COLOR, AND 6" IN WIDTH. APPLY GATE STRIPES ON A 45 DEGREE ANGLE AND POST STRIPES HORIZONTALLY.

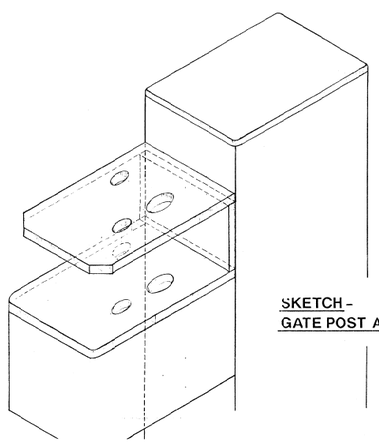

SKETCH - GATE POST ASSEMBLY

SHEET 3 OF 3

U.S. DEPARTMENT OF TRANSPORTATION
FEDERAL HIGHWAY ADMINISTRATION
EASTERN FEDERAL LANDS HIGHWAY DIVISION

U.S. CUSTOMARY DETAIL

GATE DETAIL

REVISED:

DETAIL 619-A

7/22/2008 2:08:11 PM m:\projects\blri\2e15\proj_dev\cadd\std-def\stfdrfadgn

NPS NO.	REG	STATE	PROJECT	SHEET NO.
601 / 43,952	SE	NC	PRA-BLRI 2E15	S11

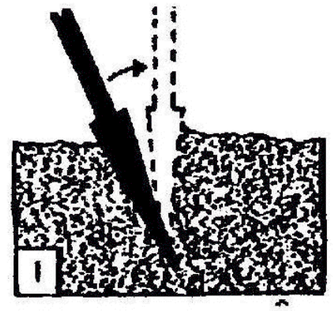

Insert bar at 45 degree angle. Push forward to upright position.

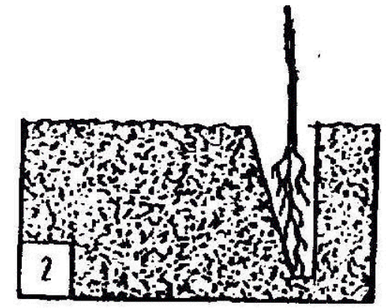

Remove bar and place plant at correct depth.

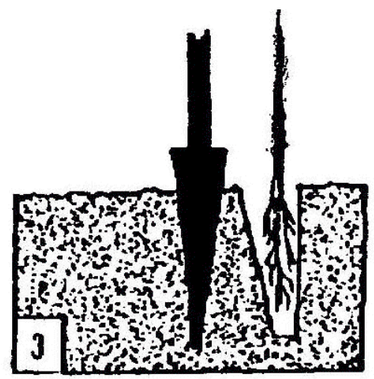

Hold plant at correct depth, insert bar 3 inches from seedling.

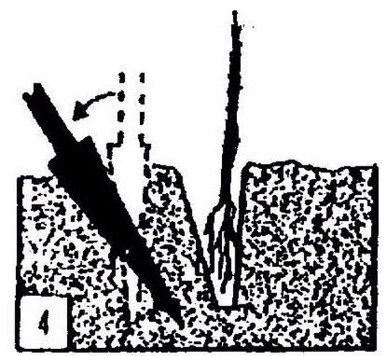

Pull bar handle toward plant to close hole at bottom of roots.

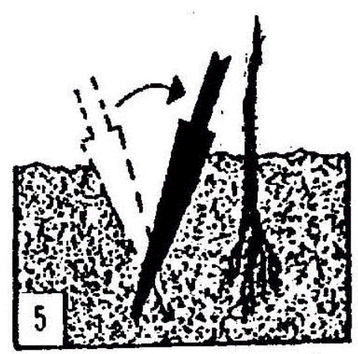

Push bar handle forward to close hole at top of roots.

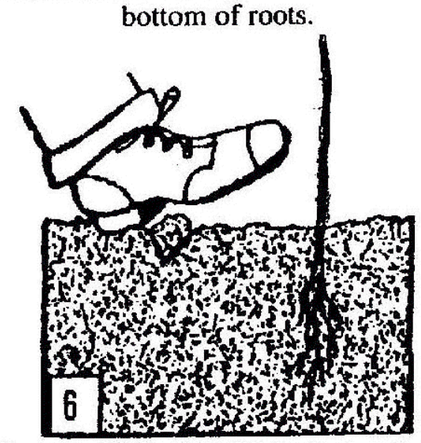

Stomp with heel to fill in the last hole.

U.S. DEPARTMENT OF TRANSPORTATION
FEDERAL HIGHWAY ADMINISTRATION
EASTERN FEDERAL LANDS HIGHWAY DIVISION

U.S. CUSTOMARY DETAIL

PLANTING DETAIL

REVISED:

DETAIL 626-A

7/22/2008 2:08:34 PM m:\projects\blri\2e15\proj_dev\cadd\std-det\stPlant.dgn

NPS NO.	REG	STATE	PROJECT	SHEET NO.
601 / 43,952	SE	NC	PRA-BLRI 2E15	S12

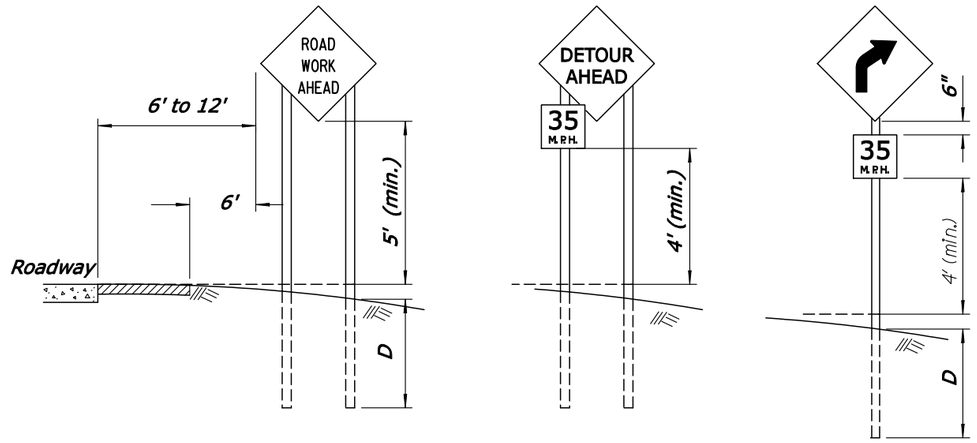

RURAL AREA

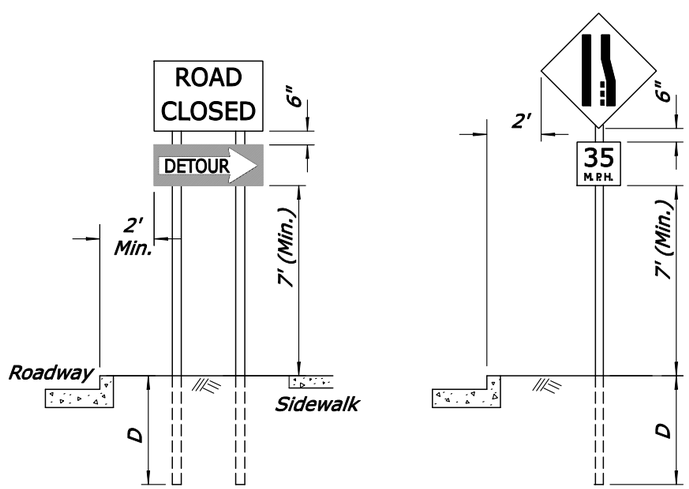

URBAN AREA

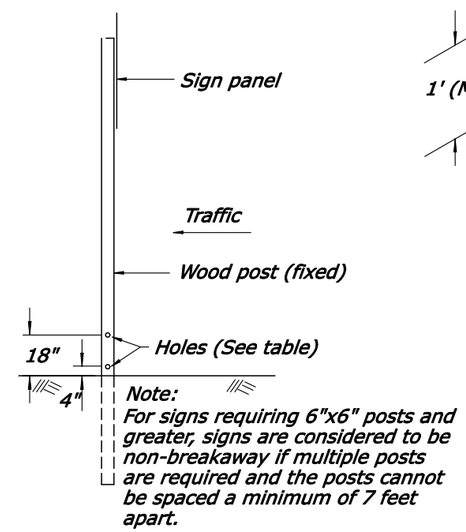

BREAKAWAY SUPPORT DETAIL
(FIXED SIGNS - 4" x 6" AND GREATER POSTS)

FIXED ROADWAY SIGNS

Post size	D	Hole Dia.	Maximum Sign Area - Sq. ft.			
			1 Post	2 Posts	3 Posts	4 Posts
4" x 4"	3'	None Req'd	10	20	X	X
4" x 6"	4'	1.5"	X	35	50	70
6" x 6"	4'	2"	X	50	75	100
6" x 8"	5'	3"	X	85	125	165

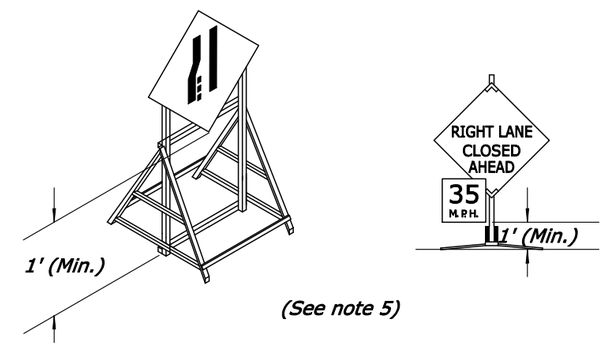

PORTABLE SIGNS
(See note 4)

Notes:

1. Wood posts are 4"x 4" unless otherwise indicated.
2. Mount signs that are wider than 3-feet or larger than 10 square feet on double posts.
3. All lumber dimensions are nominal.
4. The Contractor may submit alternate details for portable signs, however, sign mounts hold the sign face in a vertical plane. Portable signs may be mounted lower than fixed signs when approved by the CO. Ensure all portable sign supports meet the requirements of NCHRP-350 for crashworthiness.
5. When parking is permitted within 200 feet of the sign, mount the sign a minimum of 7 feet above the pavement surface.
6. When approved by the CO and the Utility Company, utility poles may be used for sign mounting.
7. For posts greater than 4" x 4" see the Breakaway Support Detail. If breakaway design cannot be used, due to post spacing, the sign should be placed outside the clearzone or be shielded by barrier. Do not place holes in posts of non-breakaway signs

NO SCALE

U.S. DEPARTMENT OF TRANSPORTATION
FEDERAL HIGHWAY ADMINISTRATION
EASTERN FEDERAL LANDS HIGHWAY DIVISION

U.S. CUSTOMARY DETAIL

CONSTRUCTION TRAFFIC CONTROL SIGN MOUNTING

DETAIL APPROVED FOR USE 02/2007
REVISED: 02/07 06/07 02/08

DETAIL
E635-01

7/22/2008 2:08:37 PM m:\projects\blr\2el5\pro_dev\cadd\std-det\sft6350_detail.dgn

REG	STATE	PROJECT	NO.
SE	NC	PRA-BLRI 2E15	T1

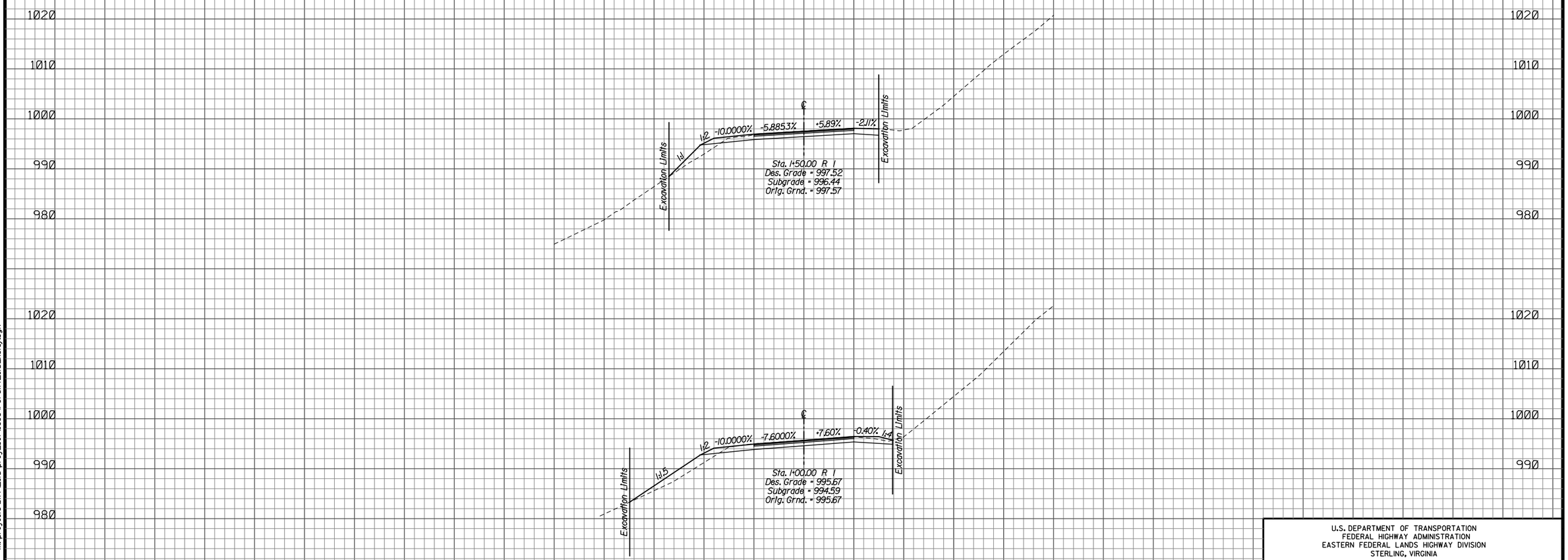

U.S. DEPARTMENT OF TRANSPORTATION
FEDERAL HIGHWAY ADMINISTRATION
EASTERN FEDERAL LANDS HIGHWAY DIVISION
STERLING, VIRGINIA

NATIONAL PARK SERVICE

CROSS SECTIONS

BLUE RIDGE PARKWAY

1+00.00 TO 1+50.00

7/22/2008 2:08:58 PM:\projects\blri\2e15\proj_dev\cadd\TOI-blri2e15_xslay.dgn

REG	STATE	PROJECT	NO.
SE	NC	PRA-BLRI 2E15	T2

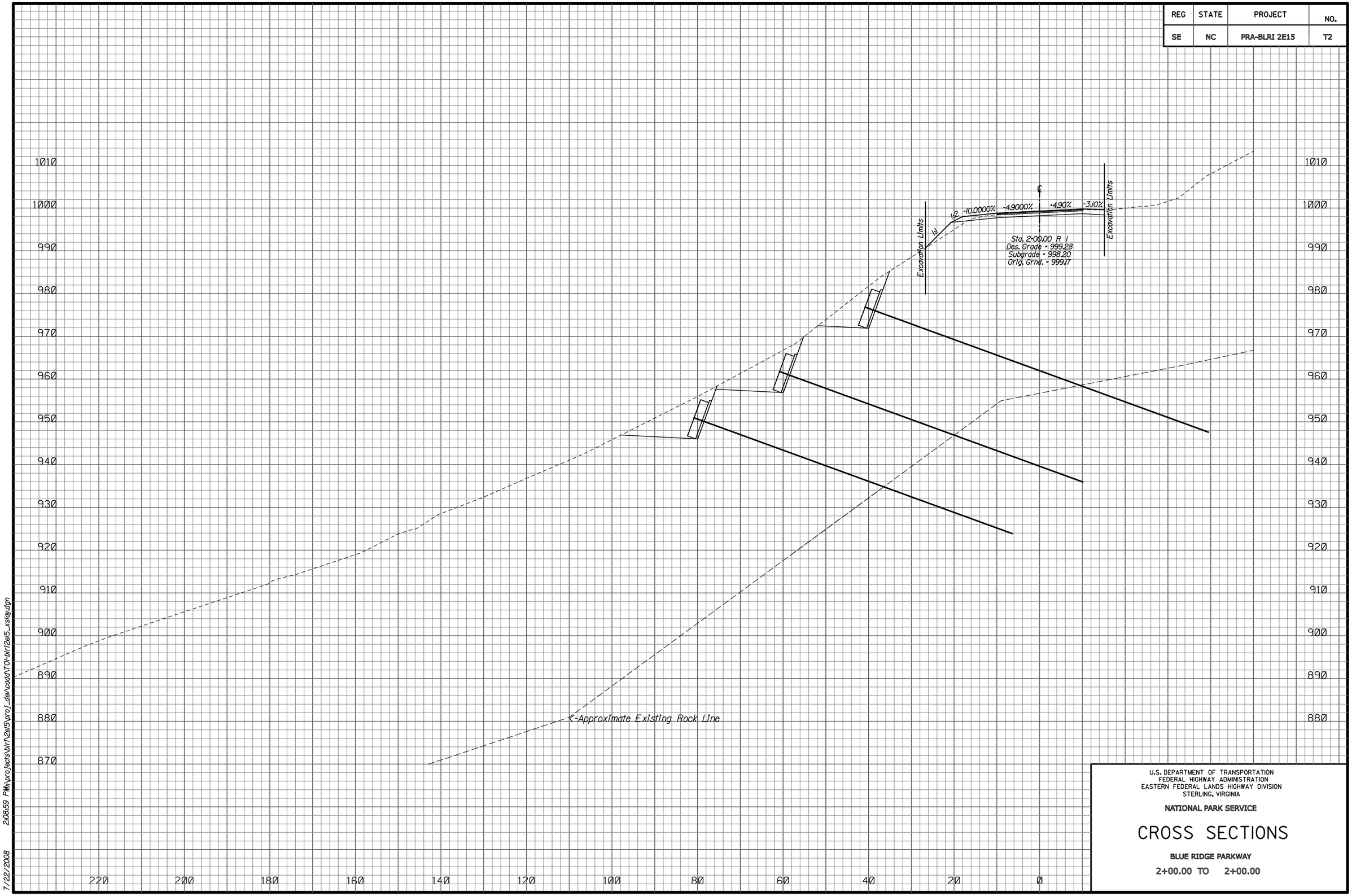

U.S. DEPARTMENT OF TRANSPORTATION
FEDERAL HIGHWAY ADMINISTRATION
EASTERN FEDERAL LANDS HIGHWAY DIVISION
STERLING, VIRGINIA

NATIONAL PARK SERVICE

CROSS SECTIONS

BLUE RIDGE PARKWAY

2+00.00 TO 2+00.00

7/22/2008 2:08:59 PM:\projects\blri\2e15\proj_de\oadd\TOl-blri2e15_xslg.dgn

REG	STATE	PROJECT	NO.
SE	NC	PRA-BLRI 2E15	T3

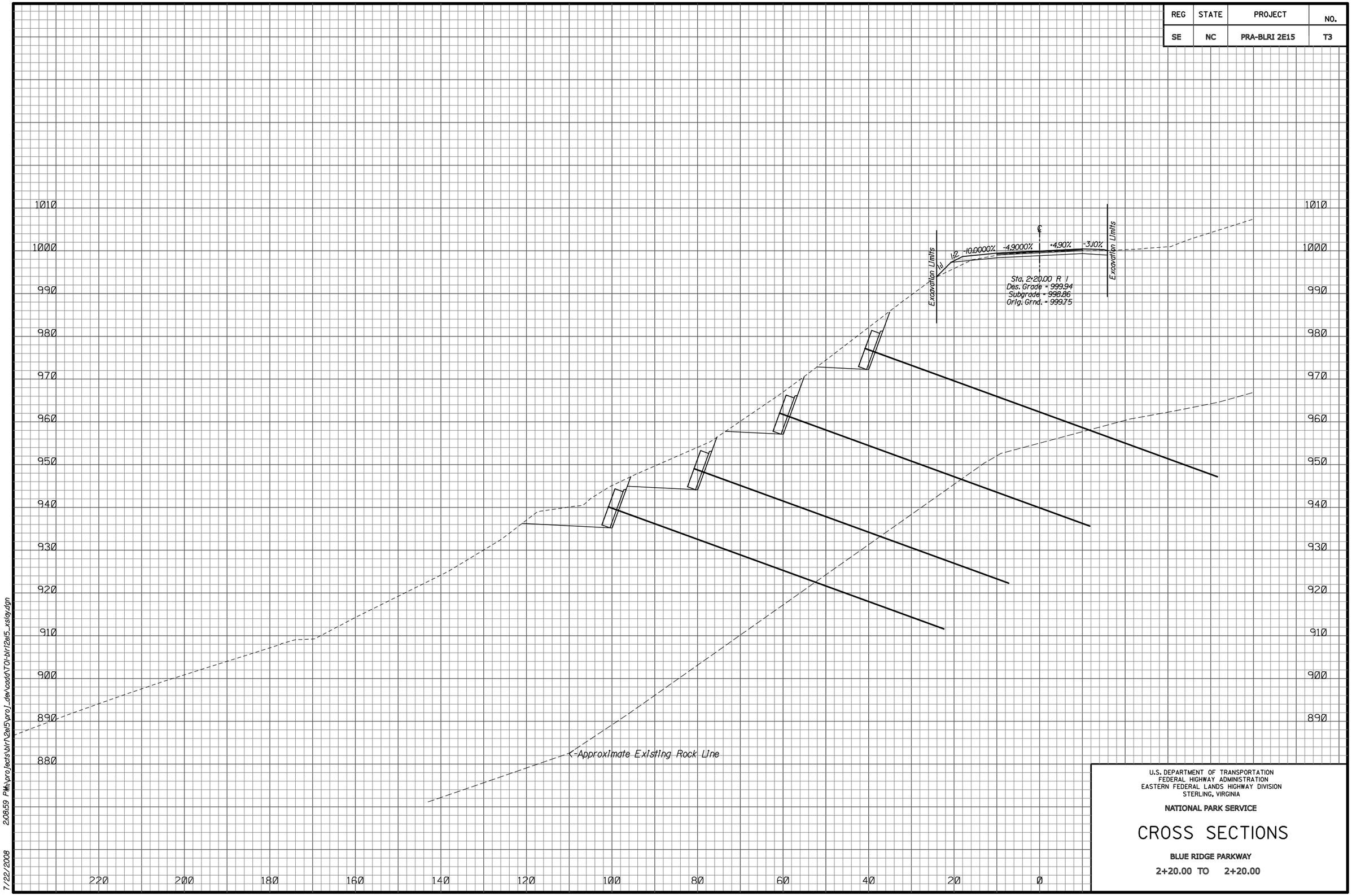

U.S. DEPARTMENT OF TRANSPORTATION
FEDERAL HIGHWAY ADMINISTRATION
EASTERN FEDERAL LANDS HIGHWAY DIVISION
STERLING, VIRGINIA

NATIONAL PARK SERVICE

CROSS SECTIONS

BLUE RIDGE PARKWAY

2+20.00 TO 2+20.00

7/22/2008 2:08:59 PM:\projects\blri\2e15\proj_de\add\TOI-blri2e15_xslg.dgn

REG	STATE	PROJECT	NO.
SE	NC	PRA-BLRI 2E15	T4

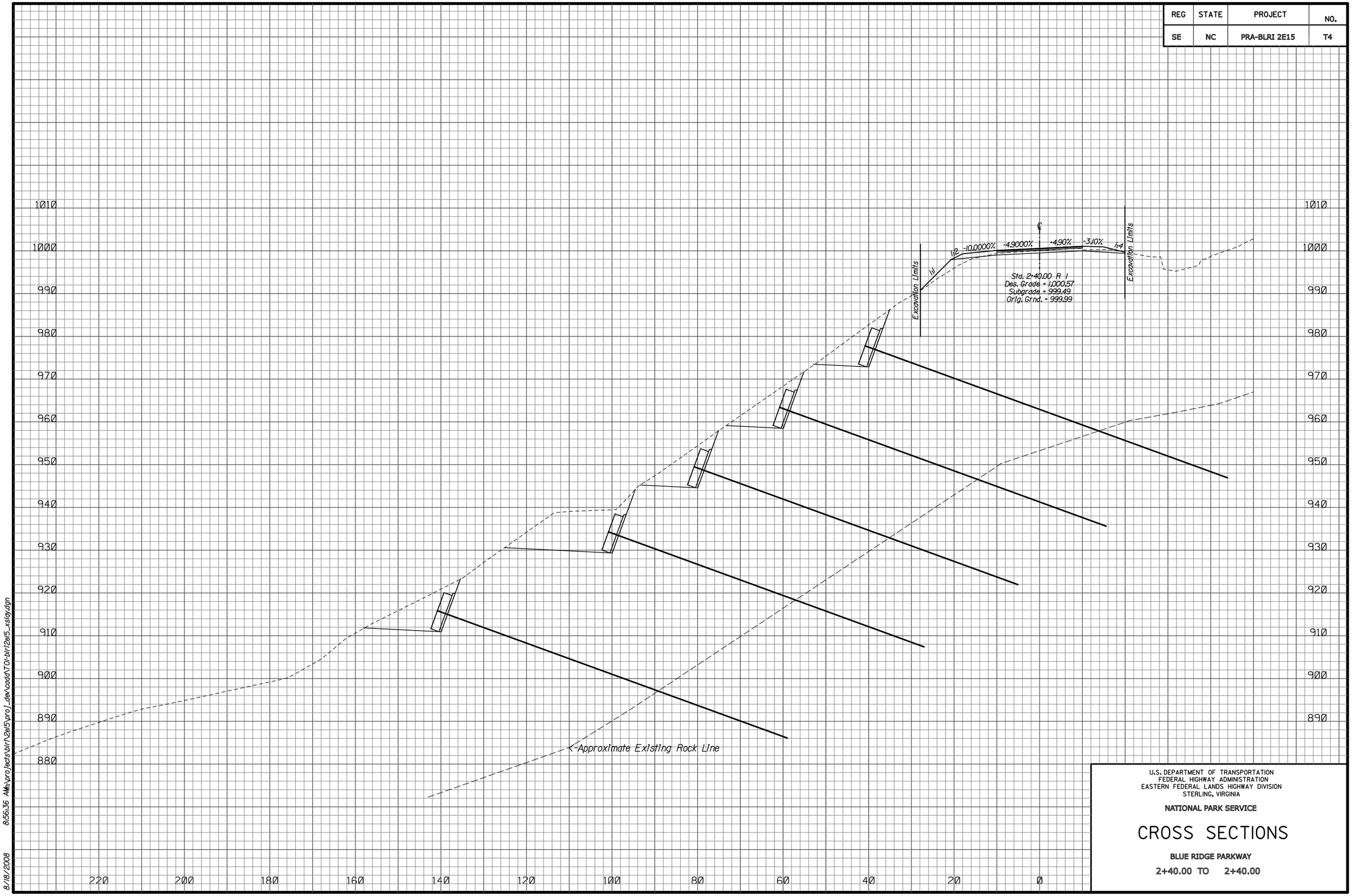

U.S. DEPARTMENT OF TRANSPORTATION
FEDERAL HIGHWAY ADMINISTRATION
EASTERN FEDERAL LANDS HIGHWAY DIVISION
STERLING, VIRGINIA

NATIONAL PARK SERVICE

CROSS SECTIONS

BLUE RIDGE PARKWAY

2+40.00 TO 2+40.00

8/18/2008 8:56:36 AM=:projects\blri\2e15\proj_de\oadd\TOI-blri2e15_xslay.dgn

REG	STATE	PROJECT	NO.
SE	NC	PRA-BLRI 2E15	T5

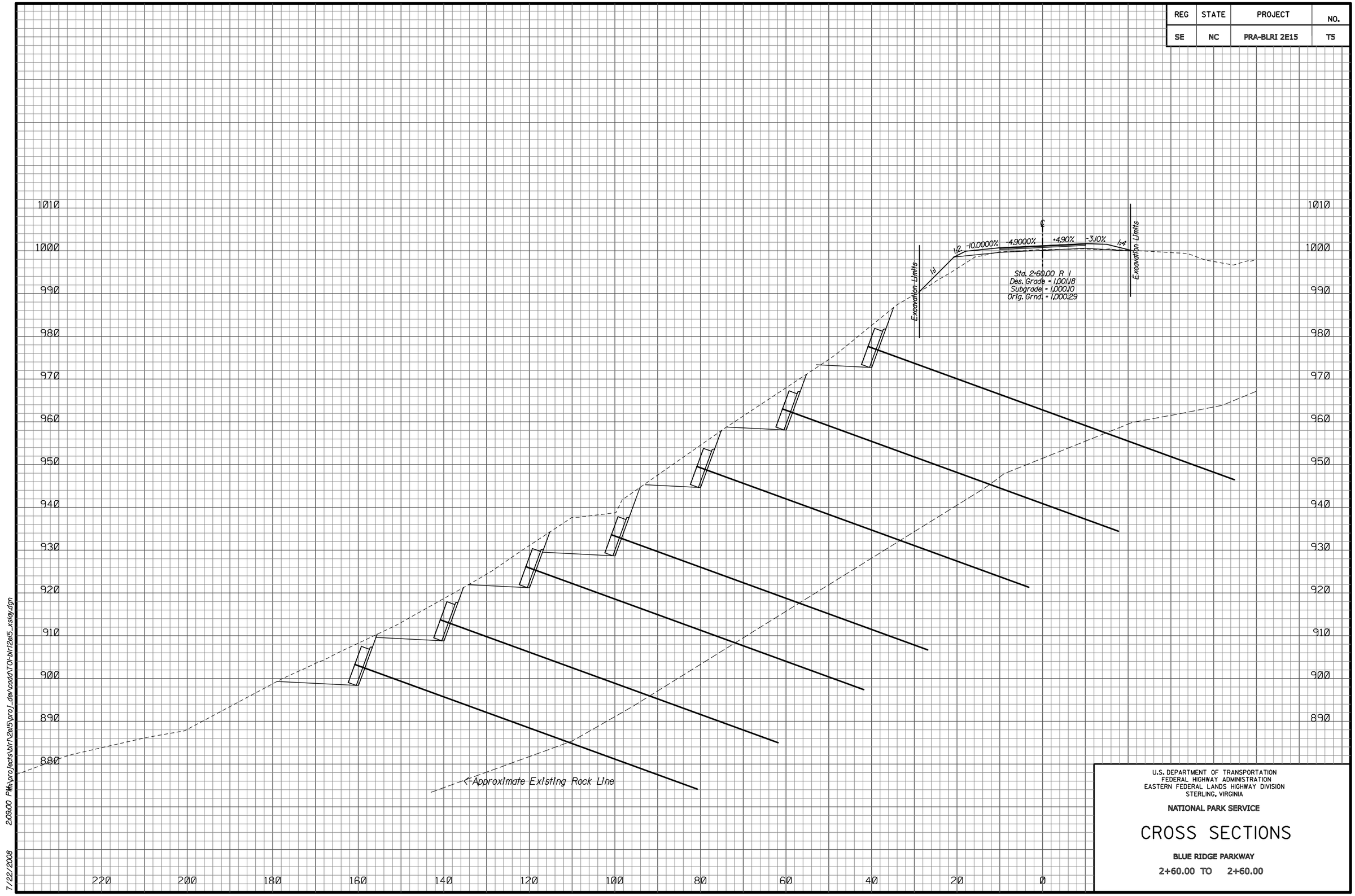

U.S. DEPARTMENT OF TRANSPORTATION
FEDERAL HIGHWAY ADMINISTRATION
EASTERN FEDERAL LANDS HIGHWAY DIVISION
STERLING, VIRGINIA

NATIONAL PARK SERVICE

CROSS SECTIONS

BLUE RIDGE PARKWAY

2+60.00 TO 2+60.00

7/22/2008 2:09:00 PM\\projects\blri\2e15\proj_dev\cadd\TO1-blri2e15_xslg.dgn

REG	STATE	PROJECT	NO.
SE	NC	PRA-BLRI 2E15	T6

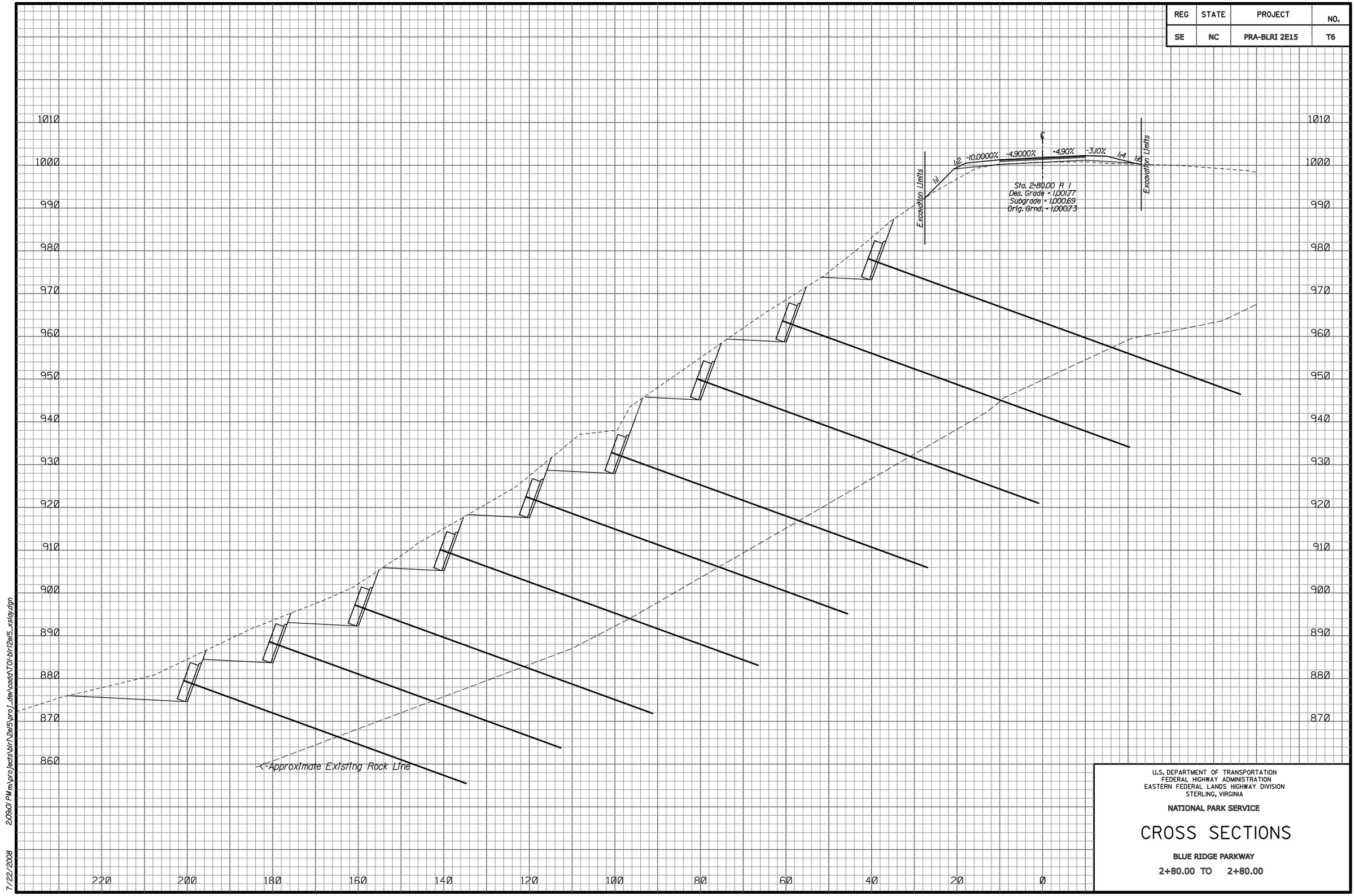

U.S. DEPARTMENT OF TRANSPORTATION
FEDERAL HIGHWAY ADMINISTRATION
EASTERN FEDERAL LANDS HIGHWAY DIVISION
STERLING, VIRGINIA

NATIONAL PARK SERVICE

CROSS SECTIONS

BLUE RIDGE PARKWAY

2+80.00 TO 2+80.00

7/22/2008 2:09:01 PM m:\projects\blri\2e15\proj_dev\odot\TOI-blri2e15_xslg.dgn

REG	STATE	PROJECT	NO.
SE	NC	PRA-BLRI 2E15	T7

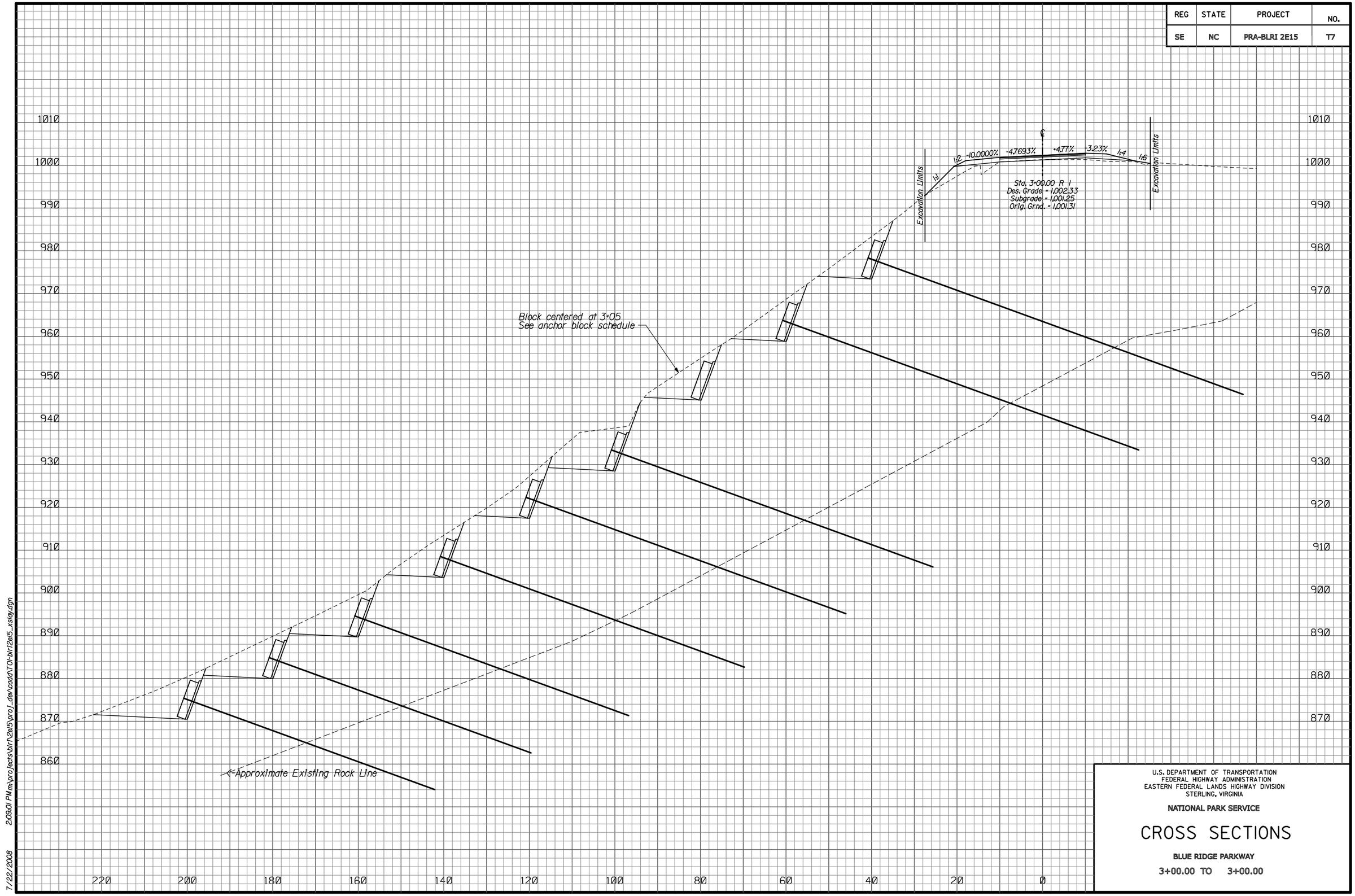

U.S. DEPARTMENT OF TRANSPORTATION
FEDERAL HIGHWAY ADMINISTRATION
EASTERN FEDERAL LANDS HIGHWAY DIVISION
STERLING, VIRGINIA

NATIONAL PARK SERVICE

CROSS SECTIONS

BLUE RIDGE PARKWAY

3+00.00 TO 3+00.00

7/22/2008 2:09:01 PM m:\projects\blri\2e15\proj_dev\odot\TOI-blri2e15_xslay.dgn

REG	STATE	PROJECT	NO.
SE	NC	PRA-BLRI 2E15	T8

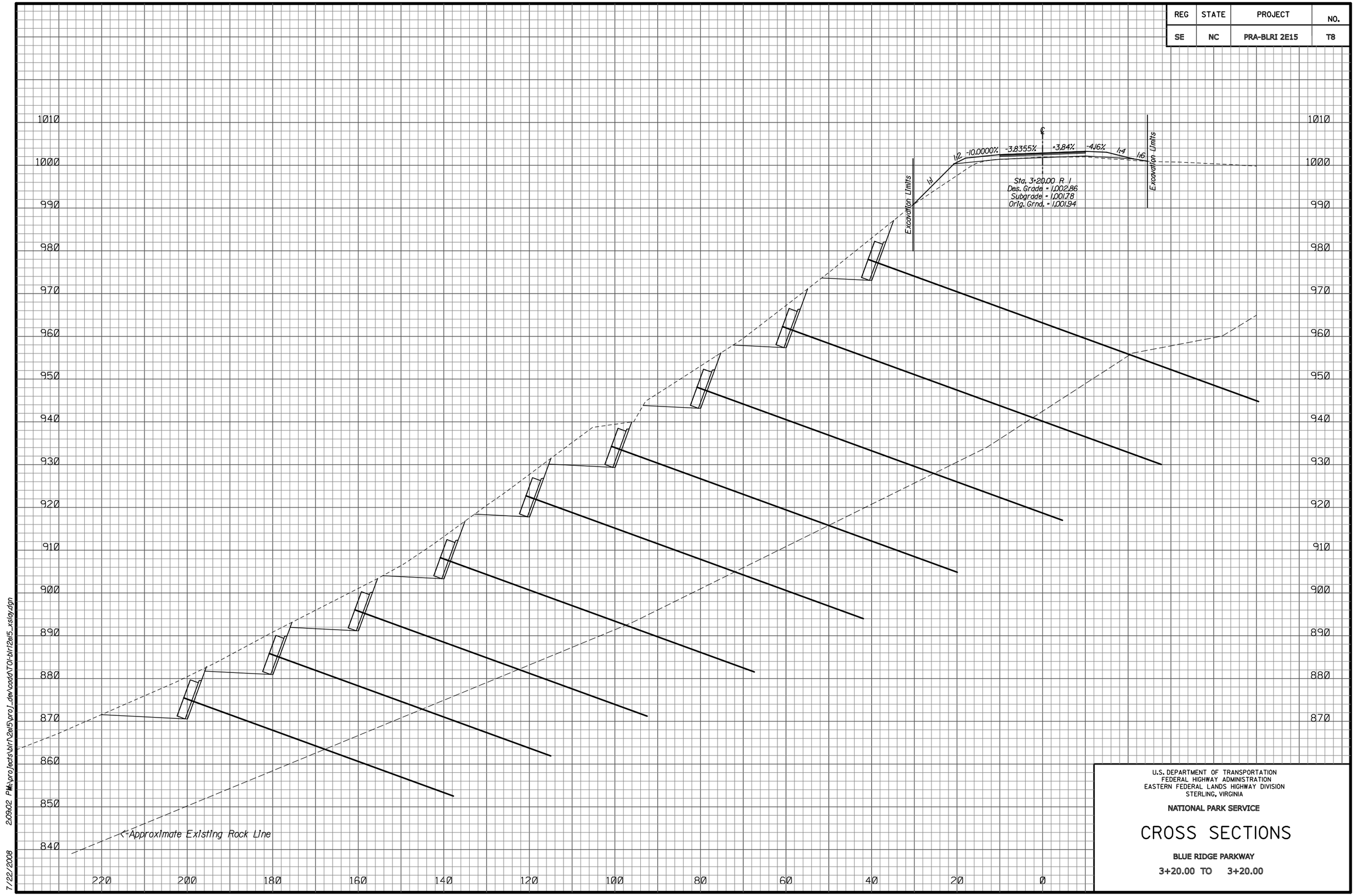

U.S. DEPARTMENT OF TRANSPORTATION
FEDERAL HIGHWAY ADMINISTRATION
EASTERN FEDERAL LANDS HIGHWAY DIVISION
STERLING, VIRGINIA

NATIONAL PARK SERVICE

CROSS SECTIONS

BLUE RIDGE PARKWAY

3+20.00 TO 3+20.00

7/22/2008 2:09:02 PM:\projects\blri\2e15\proj_de\cadd\TOI-blri2e15_xslg.dgn

REG	STATE	PROJECT	NO.
SE	NC	PRA-BLRI 2E15	T9

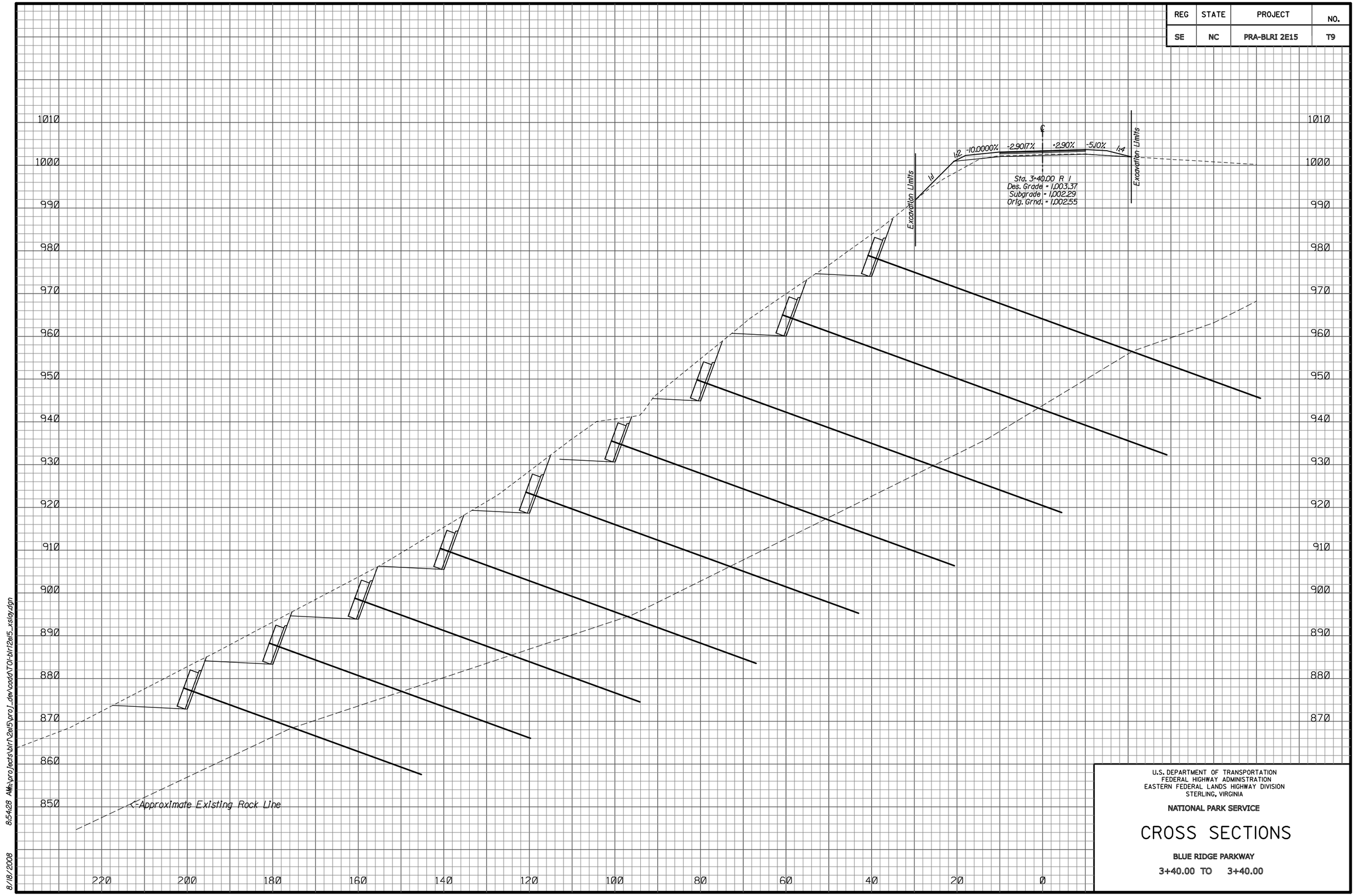

U.S. DEPARTMENT OF TRANSPORTATION
FEDERAL HIGHWAY ADMINISTRATION
EASTERN FEDERAL LANDS HIGHWAY DIVISION
STERLING, VIRGINIA

NATIONAL PARK SERVICE

CROSS SECTIONS

BLUE RIDGE PARKWAY

3+40.00 TO 3+40.00

8/18/2008 8:54:28 AM:\projects\blri\2e15\proj_dev\cadd\TOI-blri2e15_xslay.dgn

REG	STATE	PROJECT	NO.
SE	NC	PRA-BLRI 2E15	T10

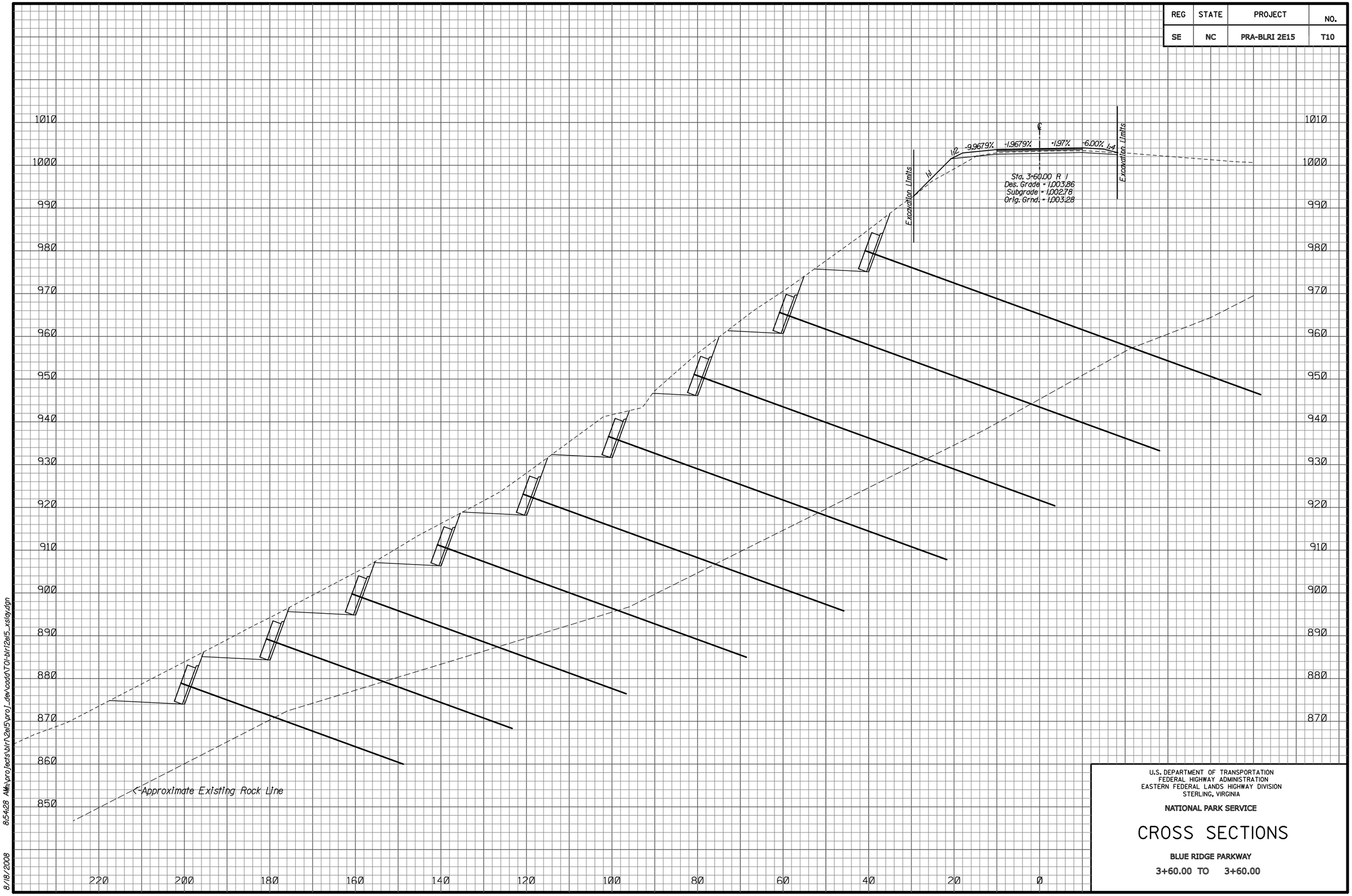

U.S. DEPARTMENT OF TRANSPORTATION
FEDERAL HIGHWAY ADMINISTRATION
EASTERN FEDERAL LANDS HIGHWAY DIVISION
STERLING, VIRGINIA

NATIONAL PARK SERVICE

CROSS SECTIONS

BLUE RIDGE PARKWAY

3+60.00 TO 3+60.00

8/18/2008 8:54:28 AM:\projects\blri\2e15\proj_dev\cadd\TOI-blri2e15_xslgy.dgn

REG	STATE	PROJECT	NO.
SE	NC	PRA-BLRI 2E15	T11

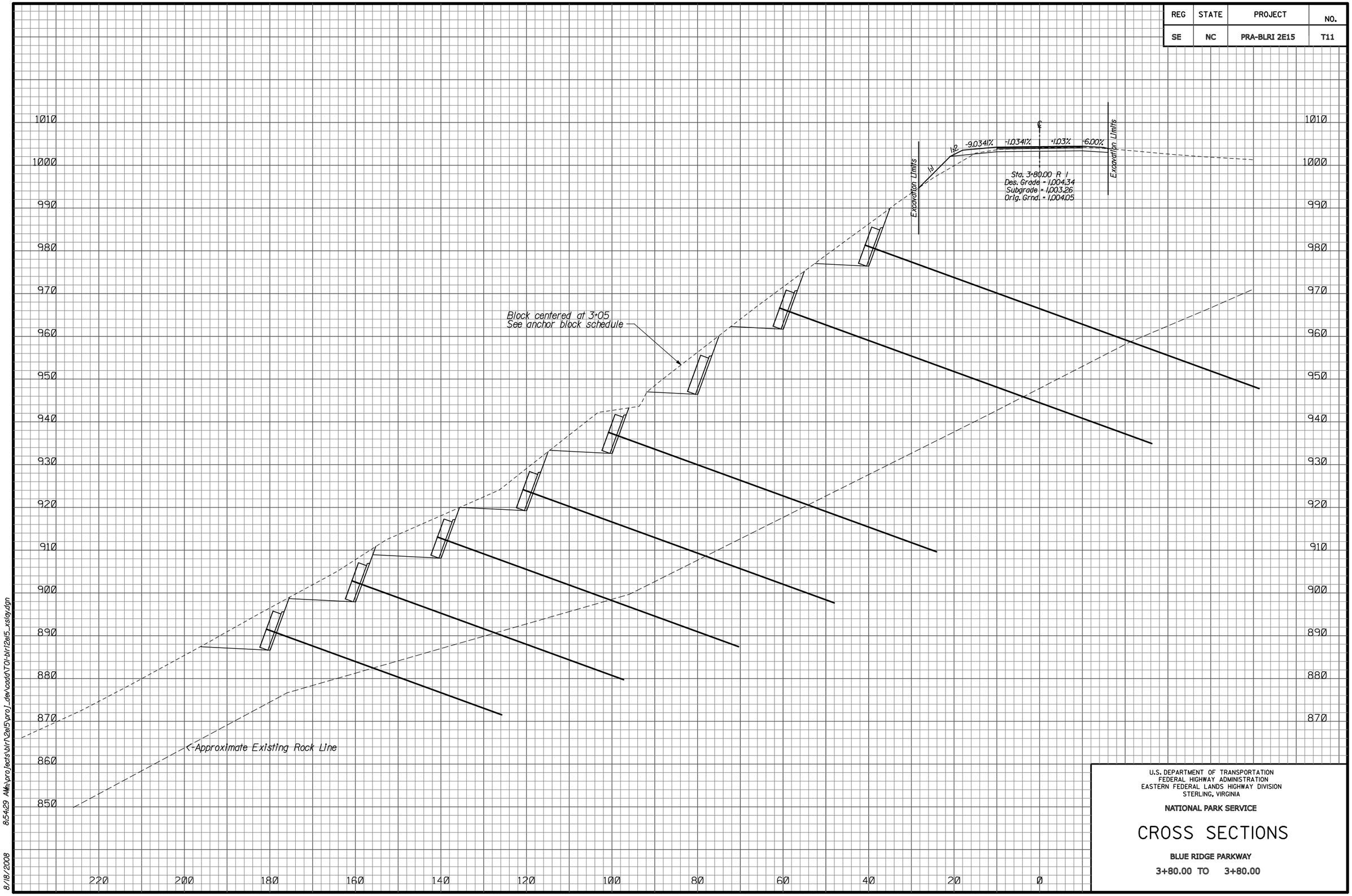

U.S. DEPARTMENT OF TRANSPORTATION
FEDERAL HIGHWAY ADMINISTRATION
EASTERN FEDERAL LANDS HIGHWAY DIVISION
STERLING, VIRGINIA

NATIONAL PARK SERVICE

CROSS SECTIONS

BLUE RIDGE PARKWAY

3+80.00 TO 3+80.00

8/18/2008 8:54:29 AM=:projects\blri\2e15\proj_de\cadd\TOI-blri2e15_xslay.dgn

REG	STATE	PROJECT	NO.
SE	NC	PRA-BLRI 2E15	T12

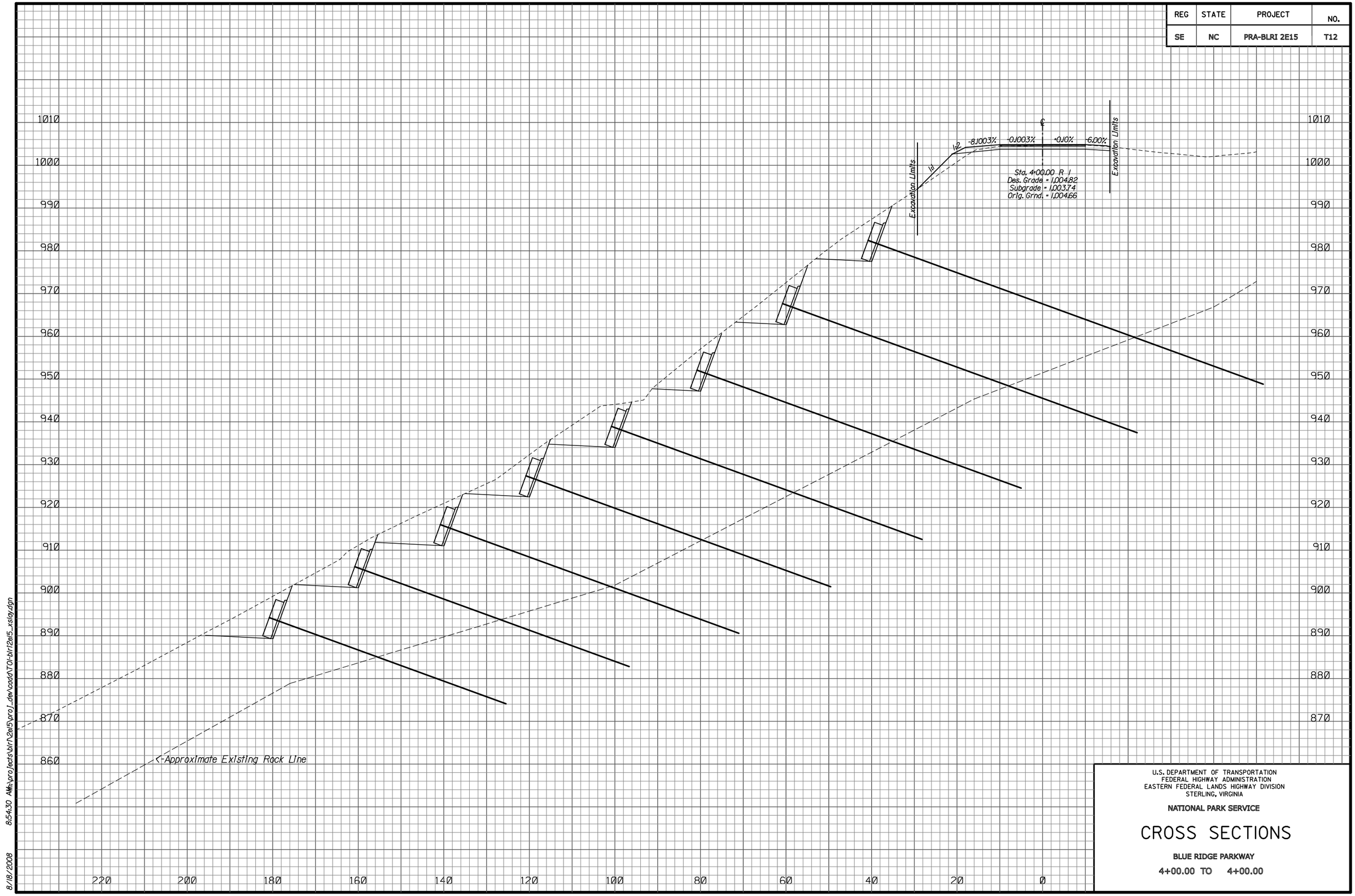

U.S. DEPARTMENT OF TRANSPORTATION
FEDERAL HIGHWAY ADMINISTRATION
EASTERN FEDERAL LANDS HIGHWAY DIVISION
STERLING, VIRGINIA

NATIONAL PARK SERVICE

CROSS SECTIONS

BLUE RIDGE PARKWAY

4+00.00 TO 4+00.00

8/18/2008 8:54:30 AM:\projects\blri\2e15\proj_dev\odot\TOI-blri2e15_xslay.dgn

REG	STATE	PROJECT	NO.
SE	NC	PRA-BLRI 2E15	T13

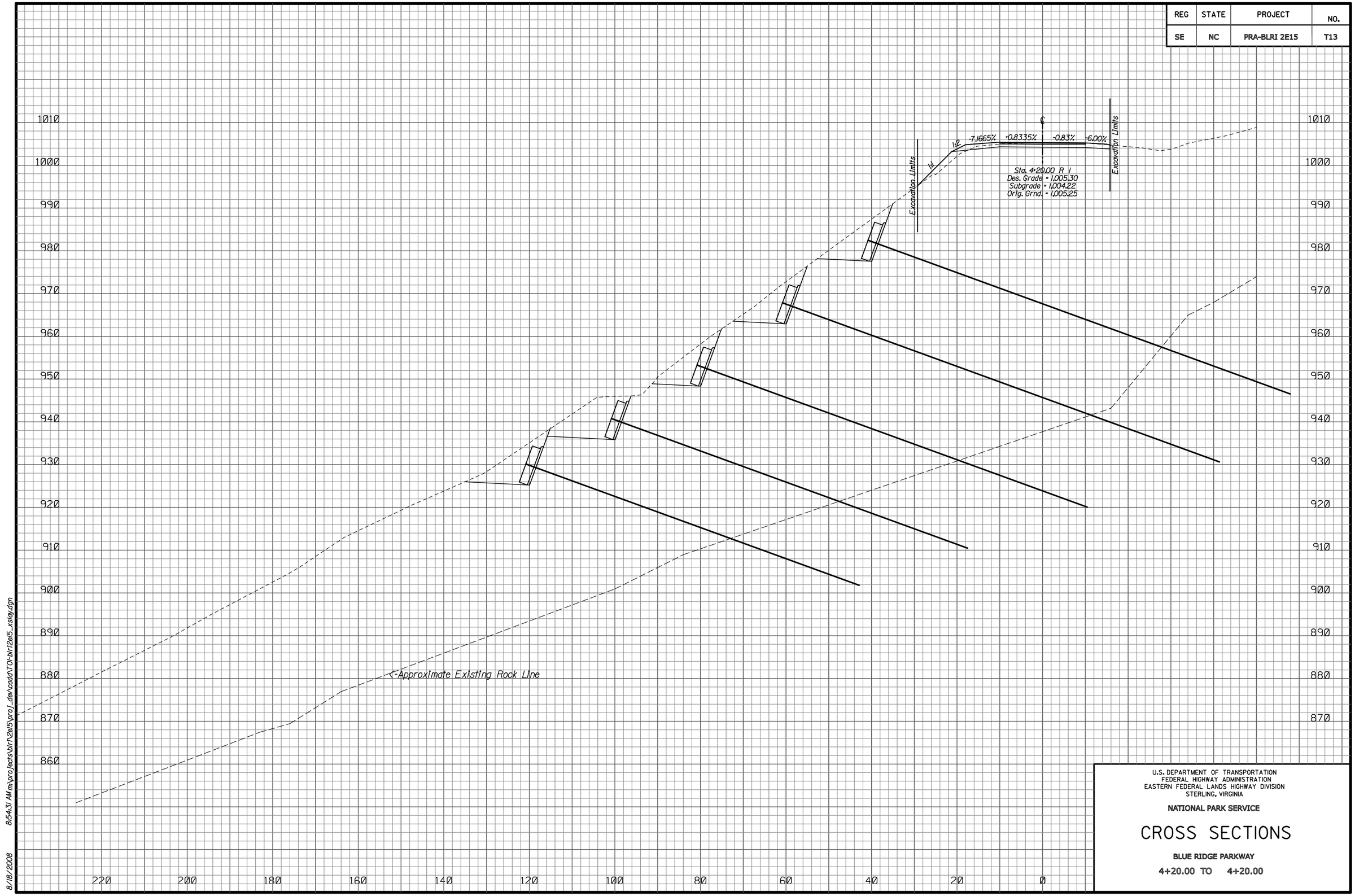

U.S. DEPARTMENT OF TRANSPORTATION
FEDERAL HIGHWAY ADMINISTRATION
EASTERN FEDERAL LANDS HIGHWAY DIVISION
STERLING, VIRGINIA

NATIONAL PARK SERVICE

CROSS SECTIONS

BLUE RIDGE PARKWAY

4+20.00 TO 4+20.00

8:54:31 AM m:\projects\blri\2e15\proj_dev\cadd\TOI-blri2e15_xslay.dgn

8/18/2008

REG	STATE	PROJECT	NO.
SE	NC	PRA-BLRI 2E15	T14

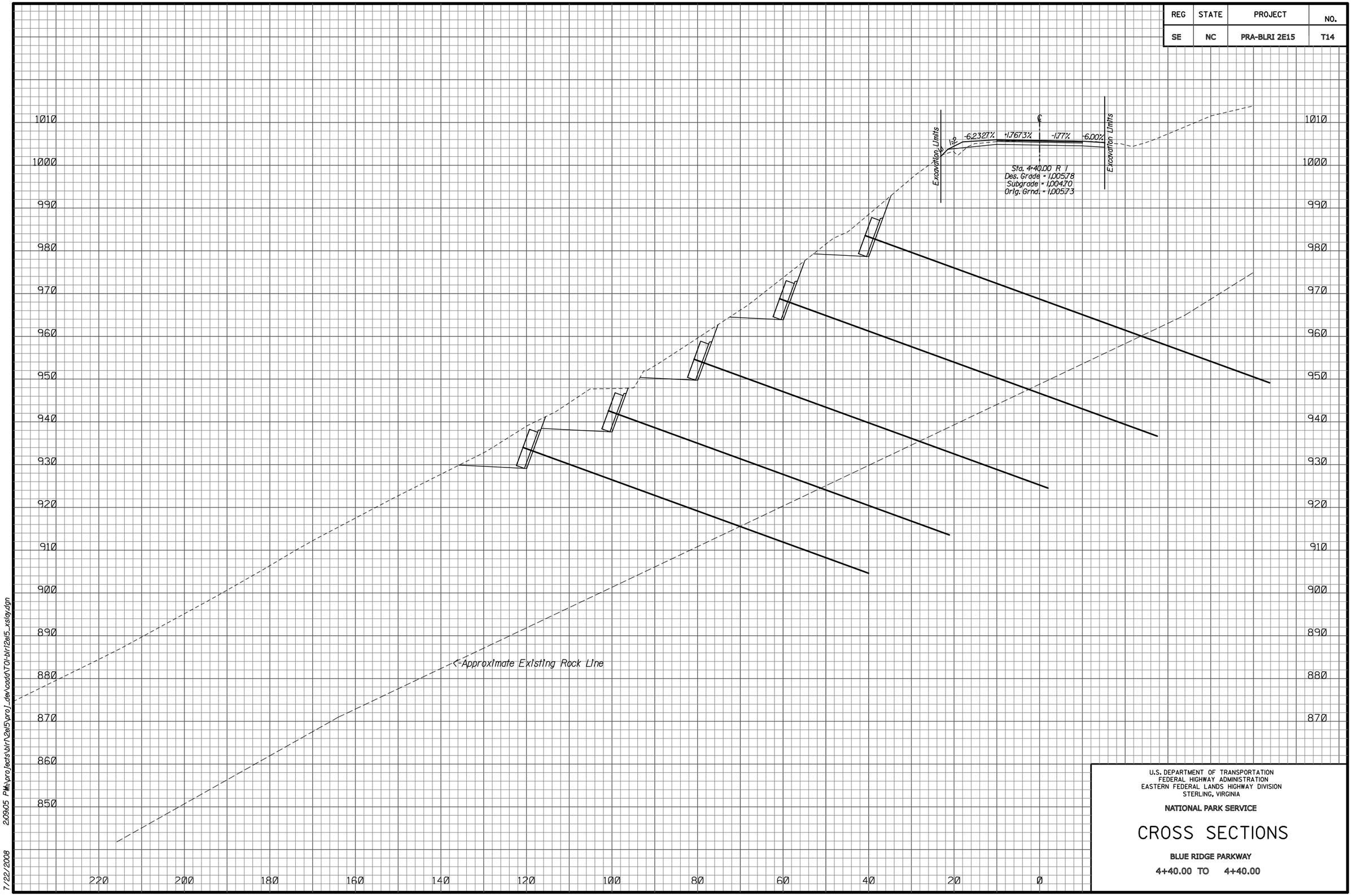

U.S. DEPARTMENT OF TRANSPORTATION
FEDERAL HIGHWAY ADMINISTRATION
EASTERN FEDERAL LANDS HIGHWAY DIVISION
STERLING, VIRGINIA

NATIONAL PARK SERVICE

CROSS SECTIONS

BLUE RIDGE PARKWAY

4+40.00 TO 4+40.00

7/22/2008 2:09:05 PM:\projects\blri\2e15\proj_de\oadd\TOI-blri2e15_xsla.dgn

REG	STATE	PROJECT	NO.
SE	NC	PRA-BLRI 2E15	T15

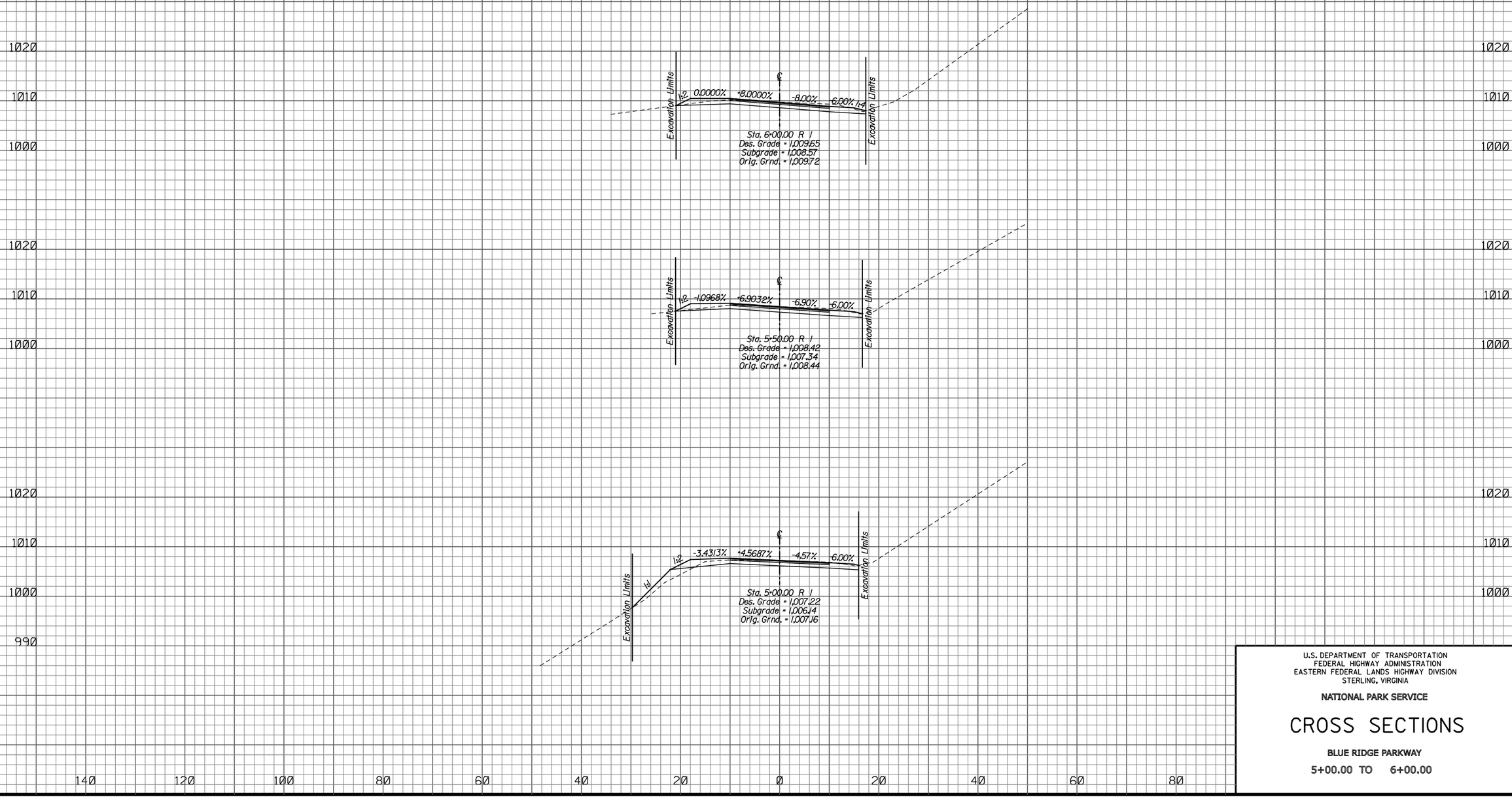

U.S. DEPARTMENT OF TRANSPORTATION
FEDERAL HIGHWAY ADMINISTRATION
EASTERN FEDERAL LANDS HIGHWAY DIVISION
STERLING, VIRGINIA

NATIONAL PARK SERVICE

CROSS SECTIONS

BLUE RIDGE PARKWAY

5+00.00 TO 6+00.00

7/22/2008 2:09:06 PM:\projects\blri\2e15\proj_de\road\T01-blri2e15_xslay.dgn

REG	STATE	PROJECT	NO.
SE	NC	PRA-BLRI 2E15	T16

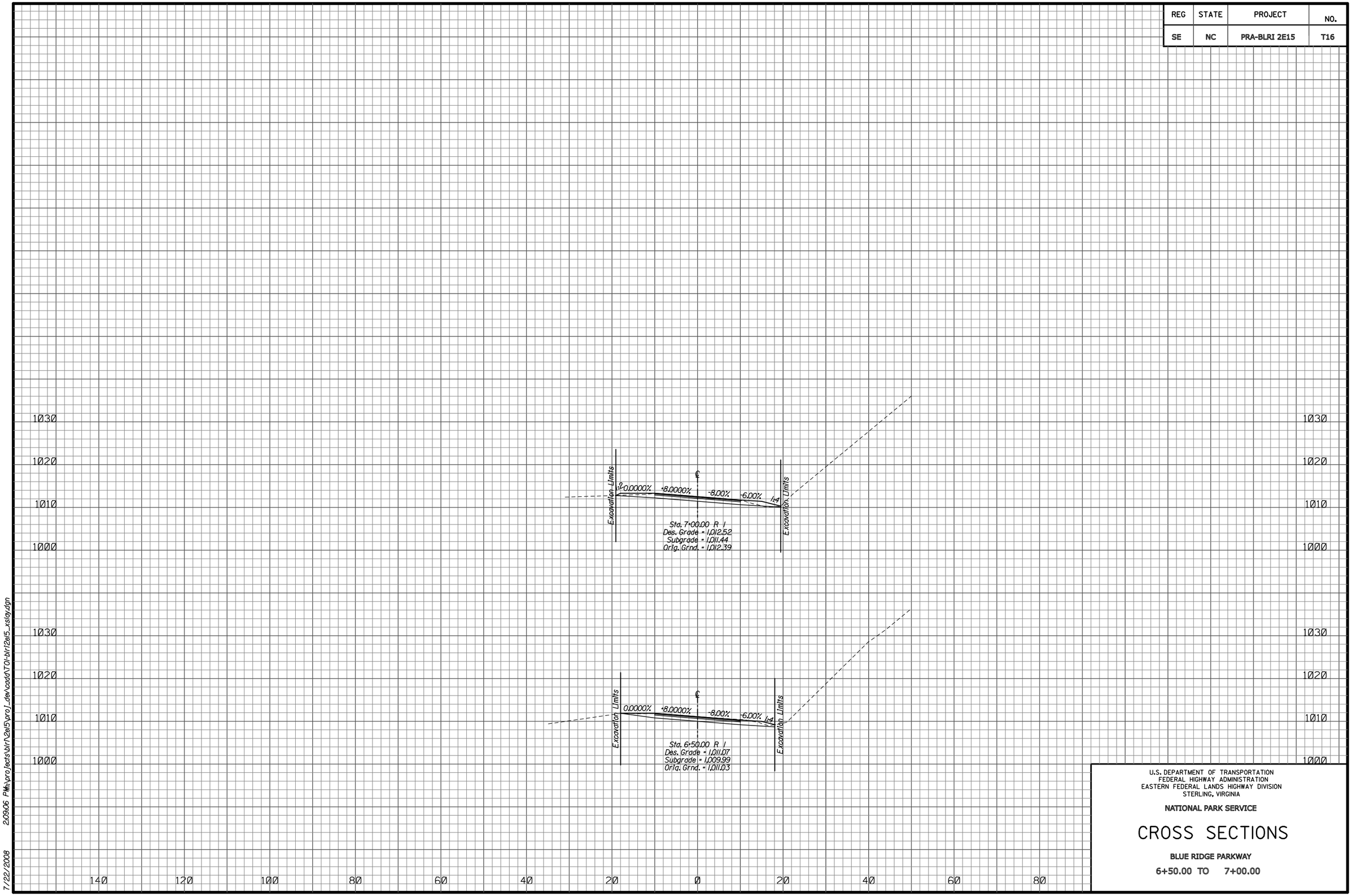

U.S. DEPARTMENT OF TRANSPORTATION
FEDERAL HIGHWAY ADMINISTRATION
EASTERN FEDERAL LANDS HIGHWAY DIVISION
STERLING, VIRGINIA

NATIONAL PARK SERVICE

CROSS SECTIONS

BLUE RIDGE PARKWAY

6+50.00 TO 7+00.00

7/22/2008 2:09:06 PM:\projects\blri\2e15\proj_de\road\TOl-blri2e15_xslay.dgn