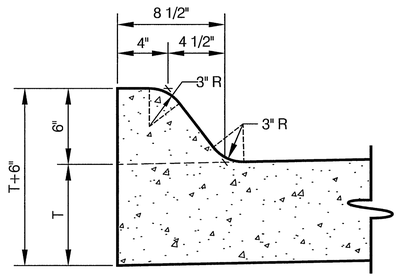

TYPE "A" INTEGRAL CURB

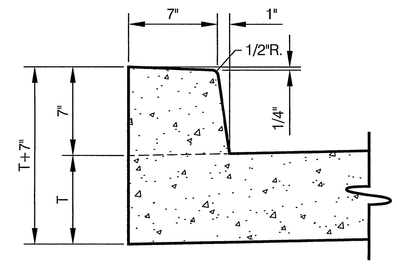

TYPE "B" INTEGRAL CURB

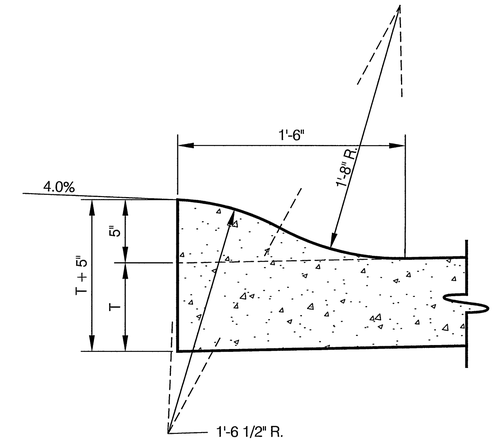

TYPE "C" INTEGRAL CURB

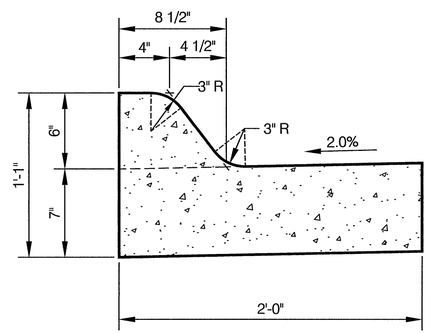

COMBINATION CURB AND GUTTER

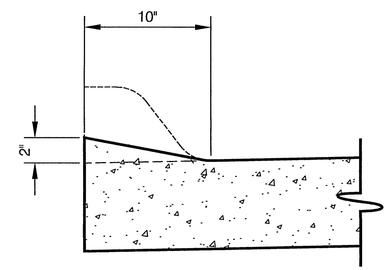

DRIVEWAY LIP CURB

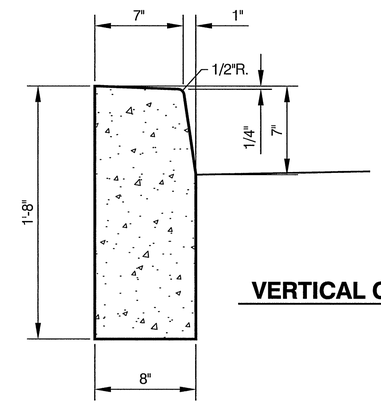

VERTICAL CURB

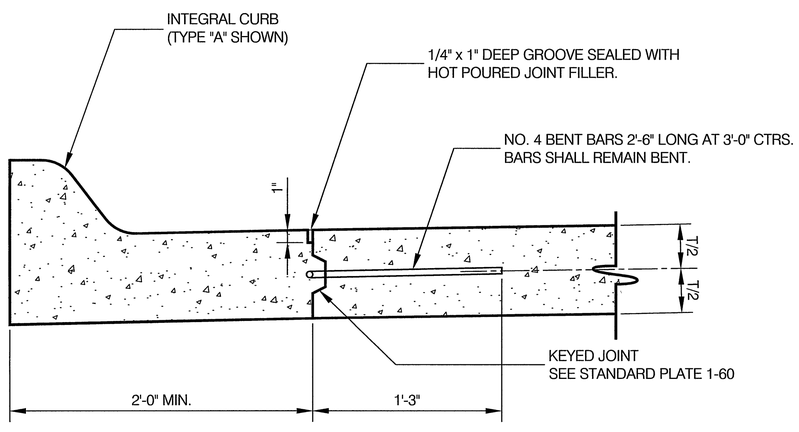

TEMPORARY CURB AND GUTTER

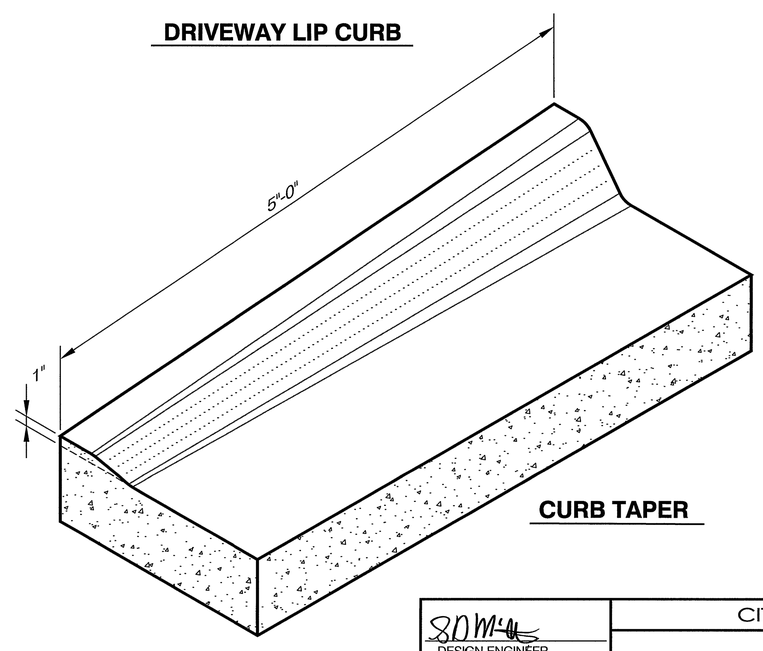

CURB TAPER

NOTES

1. INTEGRAL CURB AND COMBINATION CURB AND GUTTER CONSTRUCTION SHALL CONFORM TO SECTION 502 OF THE STANDARD SPECIFICATIONS.

DESIGN ENGINEER CITY ENGINEER	CITY OF OMAHA PUBLIC WORKS DEPARTMENT		
	CONCRETE CURB DETAILS	**STANDARD PLATE 1-52**	SHEET 1/1
		ISSUE DATE: ..... MARCH 26, 2003	