SHELVING LEGEND

SHELVING IN CONTRACT

SHELVING NOT IN CONTRACT TO BE PROVIDED OWNER

ROOM EQUIPMENT/AREA CHART	
ROOM NUMBER	NO. OF UNITS OR AREA PROVIDED
TRACE BAGGAGE STORAGE	1952 BAGS @ 1' LINEAR PER BAG
TRACE BAGGAGE CONTAINER	16 CONTAINERS
NEW BAGGAGE STORAGE	548 BAGS @ 1' LINEAR PER BAG
NEW BAG STAGING	43' X 16' SPACE
TRACE ELECTRONIC STORAGE	336' LINEAR STORAGE SPACE
TRACE EQUIPMENT STORAGE	10 PORTALS (7' X 10') AND 15 DETECTOR PROTOTYPES (3' X 3')

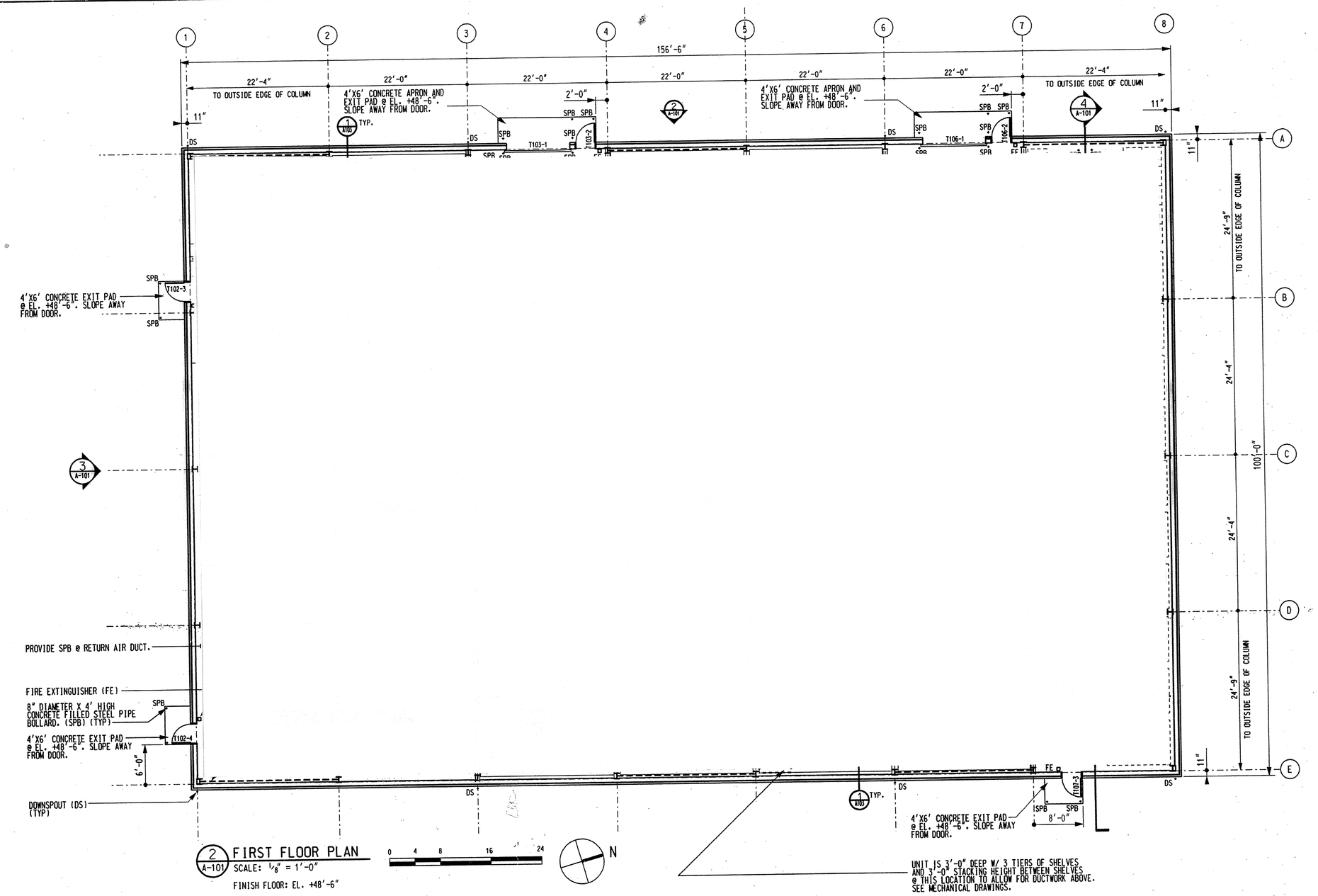

2 A-101 FIRST FLOOR PLAN
SCALE: 1/8" = 1'-0"
FINISH FLOOR: EL. 448'-6"

NOTE: FOR WALL TYPE DETAILS SEE SECT 3/A-103

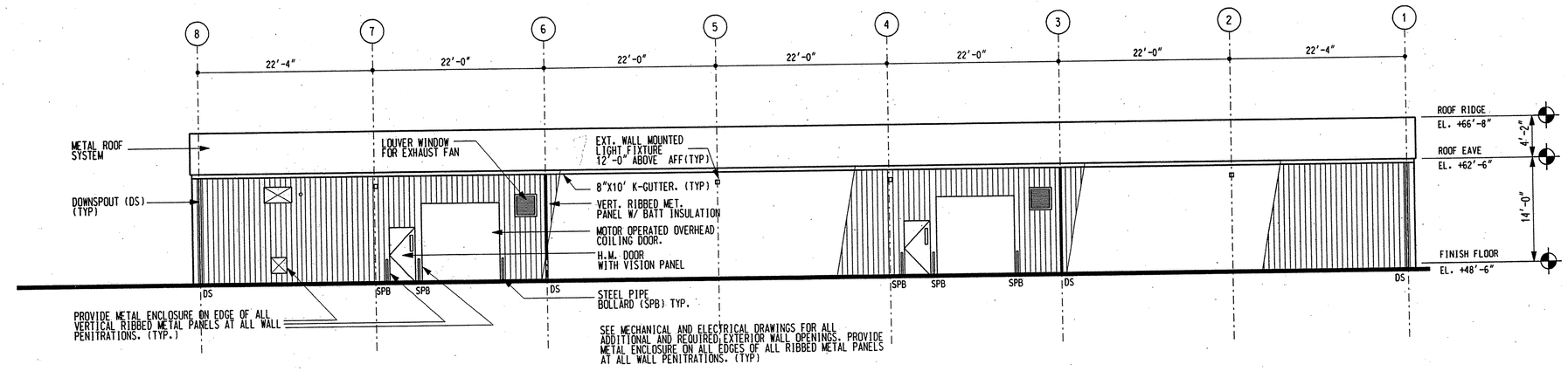

2 A-101 WEST ELEVATION
SCALE: 1/8" = 1'-0"

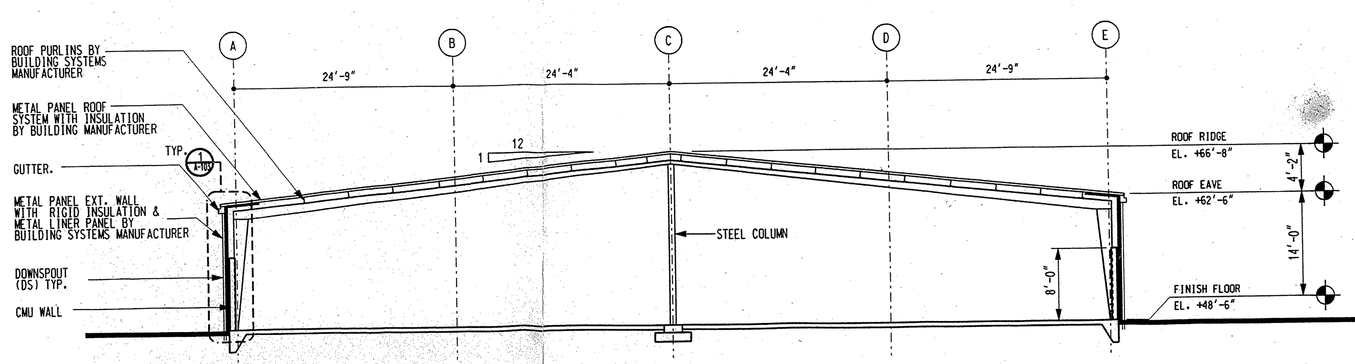

4 A-101 BUILDING SECTION
SCALE: 1/8" = 1'-0"

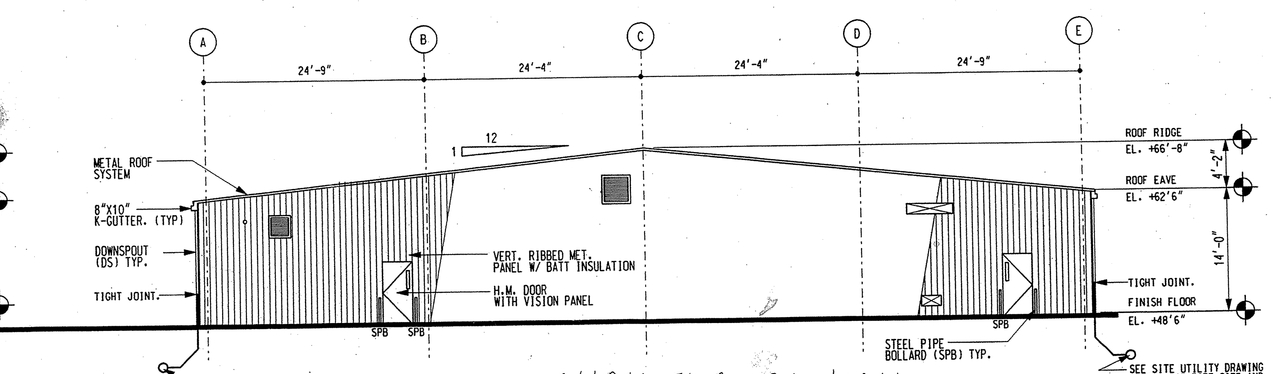

3 A-101 SOUTH ELEVATION
SCALE: 1/8" = 1'-0"

See Metal Building Shop Drawing for Layout & Details

AS BUILT

DATE 2-20-98

SEALS

REV	DATE	DESCRIPTION
	20 MAY 96	BID DOCUMENT

UNITED STATES DEPARTMENT OF TRANSPORTATION
FEDERAL AVIATION ADMINISTRATION TECHNICAL CENTER
ATLANTIC CITY INTERNATIONAL AIRPORT, NJ 08405
FAA LUGGAGE STORAGE BUILDINGS

APPROVED BY: MS. BASILYN BUNTING AAR 510

APPROVED BY: MR. FRANK SEMAN, MANAGER ACR 431

APPROVED BY: MR. DAVID DANDO: PROJECT MANAGER ACT 431

PROJECT ARCHITECT:
PROJECT ENGINEER:
The Killingsworth Partnership Inc.
Architecture Engineering Interior Design & Consulting Services
2301 Chestnut Street Philadelphia, Pa 19103 215-563-5300

SCALE: AS NOTED
DRAWN BY: RH
CK'D BY: JR
DATE: 11-10-95

DRAWING TITLE:
TRACE BUILDING FLOOR PLAN, ELEVATIONS AND SECTION

DRAWING NUMBER: A-101

PROJECT NUMBER: 90-2853-08