FOUNDATION SCHEDULE										
HANSON MARK NO.	THALES POINT NO.	COORDINATE LOCATION "X"	COORDINATE LOCATION "Y"	DESIGN FORCES HORIZ. (kN)	DESIGN FORCES VERTICAL (kN)	FORCE ANGLE (DEGREES)	FOUNDATION TYPE	WORKING POINT ELEVATION	ASBUILT WORKING POINT ELEVATION	ASBUILT DISTANCE FROM CENTER
M1	1	190.000	0.000	0.40	−554.30	−89.959	TYPE B	6.75	6.765	0
M1(a)	33	190.000	30.000	49.01	31.31	32.572	TYPE F	8.75	8.765	31.46
M1(b)	35	215.981	−15.000	47.81	30.54	32.566	TYPE F	8.75	8.775	31.68
M1(c)	34	164.019	−15.000	52.10	33.32	32.599	TYPE F	6.75	6.815	29.96
M1(d)	26	190.000	55.000	131.27	125.54	43.721	TYPE E	8.75	8.78	52.9
M1(e)	24	237.631	−27.500	163.76	163.05	44.875	TYPE E	8.75	8.785	58
M1(f)	28	142.367	−27.500	66.90	61.85	42.754	TYPE E	7.75	7.815	55.93
M2	1	120.000	0.000	5.81	−1265.80	−89.737	TYPE A	6.75	6.75	0
M2(a)	26	120.000	33.500	108.19	72.39	33.786	TYPE D	7.00	6.970	32.31
M2(b)	24	149.012	−16.750	103.64	65.50	32.291	TYPE D	6.75	6.8	32.28
M2(c)	28	90.988	−16.750	113.48	75.93	33.785	TYPE D	6.50	6.52	32.23
M2(d)	35	120.000	95.000	327.23	272.17	39.751	TYPE C	8.00	7.98	95.86
M2(e)	33	202.272	−47.500	321.14	289.35	42.019	TYPE C	8.50	8.50	95.03
M2(f)	37	37.728	−47.500	283.04	209.30	36.482	TYPE C	6.50	6.56	94.86
M3	1	0.000	0.000	0.97	−1291.74	−89.957	TYPE A	6.75	6.75	0
M3(a)	26	0.000	33.500	99.65	65.14	33.173	TYPE D	5.75	5.78	33.475
M3(b)	24	29.012	−16.750	99.97	65.28	33.144	TYPE D	6.50	6.50	33.49
M3(c)	28	−29.012	−16.750	99.85	65.10	33.103	TYPE D	6.50	6.525	33.43
M3(d)	35	0.000	92.000	331.24	286.68	40.876	TYPE C	5.75	5.745	91.98
M3(e)	37	79.674	−46.000	327.82	283.76	40.880	TYPE C	6.50	6.515	91.97
M3(f)	33	−79.674	−46.000	328.52	285.03	40.945	TYPE C	6.50	6.555	91.9
M4	1	−120.000	0.000	3.73	−1213.70	−89.824	TYPE A	6.75	6.705	0
M4(a)	26	−120.000	33.500	106.70	70.75	33.548	TYPE D	5.75	5.765	32.6
M4(b)	28	−90.988	−16.750	106.66	70.25	33.371	TYPE D	6.50	6.475	32.66
M4(c)	24	−149.012	−16.750	100.81	63.08	32.035	TYPE D	6.00	6.045	32.719
M4(d)	35	−120.000	95.000	329.40	275.38	39.896	TYPE C	5.75	5.765	95
M4(e)	37	−37.728	−47.500	271.23	202.94	36.805	TYPE C	6.50	6.595	94.91
M4(f)	33	−202.272	−47.500	324.90	295.10	42.249	TYPE C	6.25	6.26	95.03
M5	1	−190.000	0.000	5.06	−614.38	−89.528	TYPE B	6.75	6.765	0
M5(a)	33	−190.000	30.000	48.69	30.96	32.450	TYPE F	5.75	5.75	29.972
M5(b)	34	−164.019	−15.000	56.53	36.03	32.516	TYPE F	6.00	6.025	29.97
M5(c)	35	−215.981	−15.000	46.97	29.85	32.442	TYPE F	6.25	6.24	29.98
M5(d)	26	−190.000	55.000	137.90	130.37	43.392	TYPE E	5.75	5.76	54.965
M5(e)	28	−142.369	−27.500	70.02	60.30	40.731	TYPE E	7.75	7.725	55.892
M5(f)	24	−237.631	−27.500	187.63	183.10	44.300	TYPE E	6.50	6.57	55.02

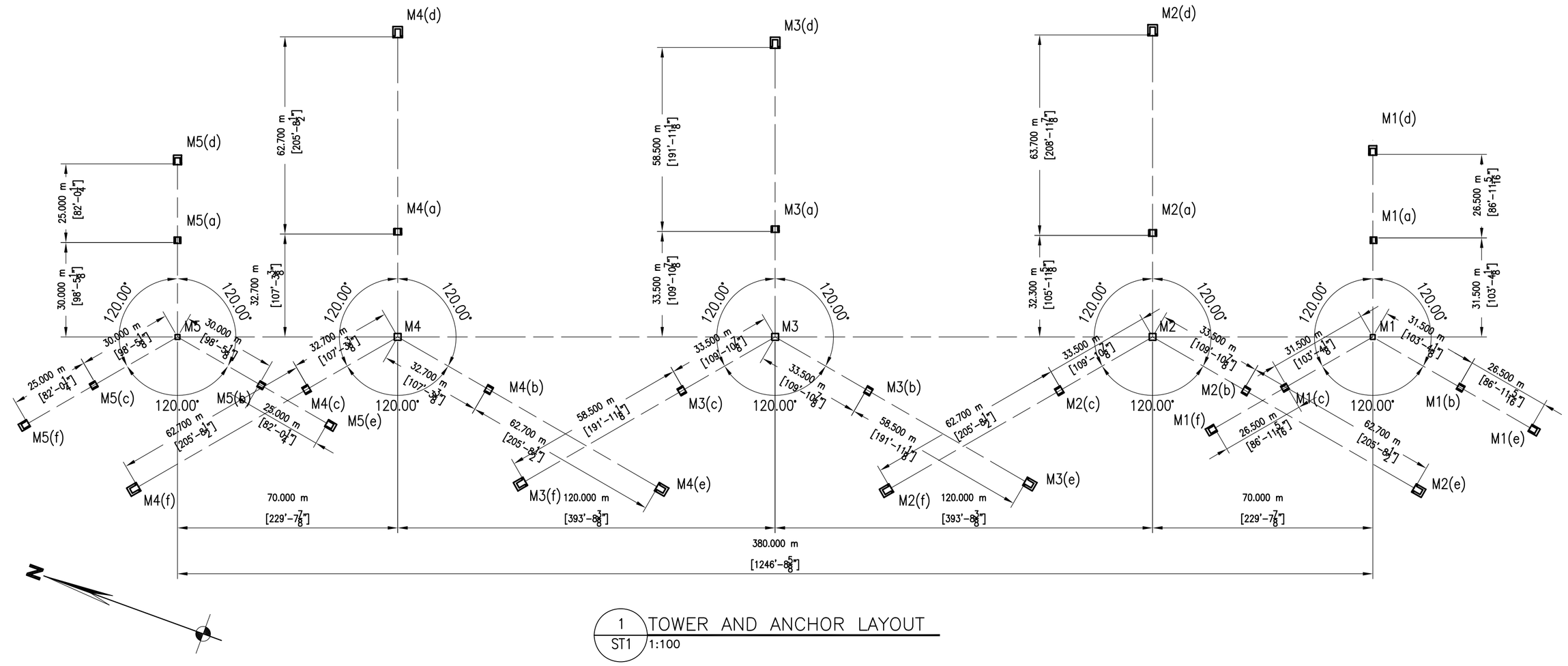

1 ST1 TOWER AND ANCHOR LAYOUT
1:100

GENERAL

G-1. THE MAST AND GUY ANCHOR FOUNDATIONS ARE DESIGNED FOR THE FORCES SHOWN IN THE FOUNDATION SCHEDULE ON THIS SHEET. FOUNDATION FORCES WERE PROVIDED BY THALES BROADCAST & MULTIMEDIA Gmbh.

G-2. NET ALLOWABLE SOIL BEARING PRESSURE – 300 kg/cm2 (294.3 kN/m2.)

FOUNDATION

F-1. FILL SHALL BE COMPACTED TO 98% STANDARD PROCTOR ASTM D-698.

F-2. CHEMICAL PROPERTIES OF SOIL PER MIDDLE EAST SURVEYS GEOTECHNICAL REPORT FOR TRANSMITTER BUILDING ADDITION V.O.A. RADIO STATION, NORTH KUWAIT:
SULPHATES: 2400 PPM
CHLORIDES: 110 PPM
PH: 7.6

CONCRETE

C-1. ALL CONCRETE SHALL HAVE A MINIMUM 28 DAY COMPRESSIVE STRENGTH OF 21 MPa WITH AN AIR CONTENT OF 6% ±1%. SULFATE RESISTING CONCRETE (TYPE 5 PORTLAND CEMENT) REQUIRED. MAXIMUM WATER – CEMENT RATIO BY WEIGHT = 0.45.

C-2. ALL REINFORCEMENT BARS SHALL HAVE THE FOLLOWING PROPERTIES:
YEILD STRENGTH = 420 MPa MINIMUM
TENSILE STRENGTH = 550 MPa MINIMUM
DEFORMED / RIBBED BARS – ASTM A706 / ASTM A706M.

C-3. A 20mm x 20mm CHAMFER SHALL BE PROVIDED AT ALL EDGES.

C-4. A LEAN CONCRETE MUD SLAB 100mm THICK SHALL BE USED IN THE EXCAVATION IF CONDITIONS REQUIRE. LEAN CONCRETE SHALL HAVE A MINIMUM 28 DAY COMPRESSIVE STRENGTH OF 17 MPa. INTENTIONALLY ROUGHEN SURFACE OF ALL MUD SLABS TO PERMIT BOND TO CAST CONCRETE FOUNDATION STRUCTURES. PROVIDE A CEMENT SLURRY BONDING AGENT BETWEEN MUD SLAB AND FOUNDATION STRUCTURE.

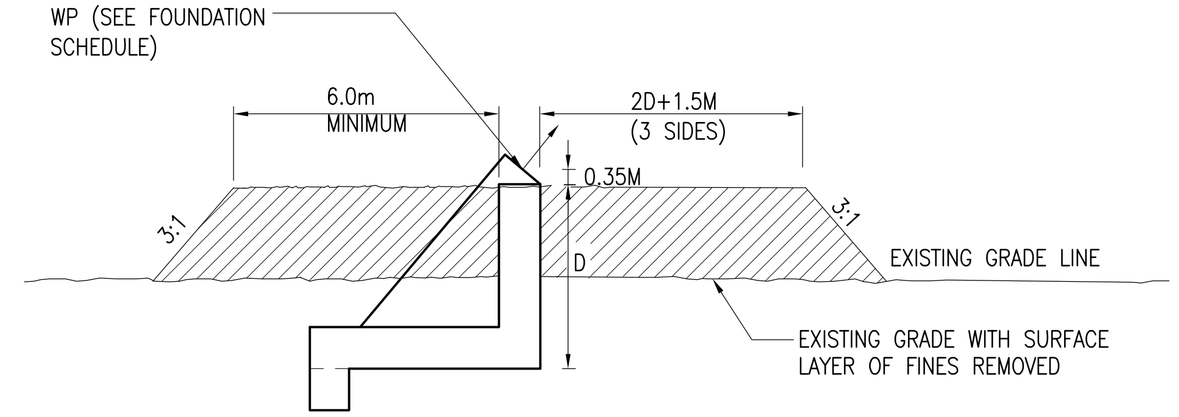

2 ST1 GUY ANCHOR FOUNDATION – BERM DETAIL (TYP)
NTS

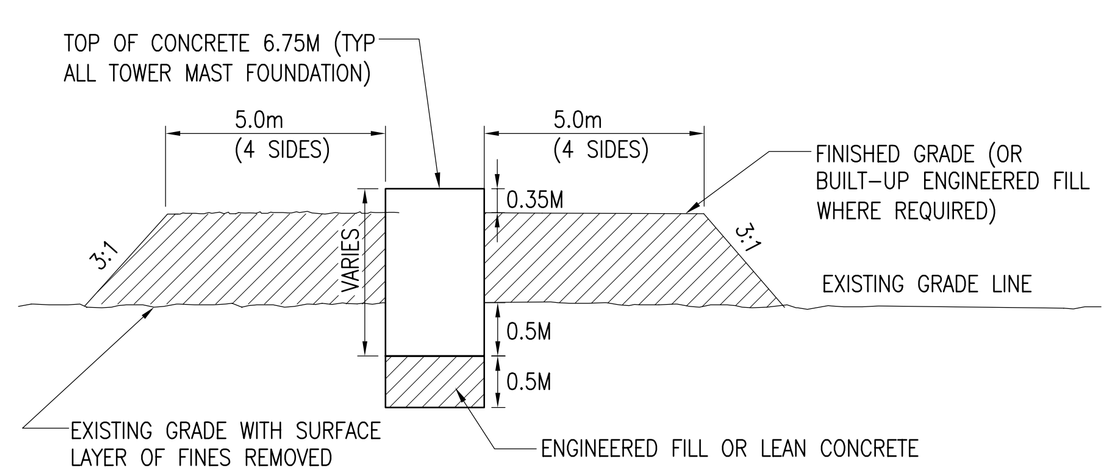

3 ST1 TOWER MAST FOUNDATION (TYP)
NTS

AS BUILT

GRAPHIC SCALE:
0 10m 20m 50m
SCALE: 1:100 (METRIC)

SEAL:

REV	DESCRIPTIONS	DATE	APPD.

REVISION

INTERNATIONAL BROADCASTING BUREAU
INTERNATIONAL BROADCASTING BUREAU
ENGINEERING & TECHNICAL OPERATIONS
WASHINGTON, D.C. 20547

Bader Al Mulla & Bros. Co. W.L.L.
Engineering Group

		DATE
DRAWN	HAK	23/05/04
CHK. BY.	JPB	DATE
ENGR.	JPB	DATE

APPROVALS
PROJ. MANAGER TC

SHORTWAVE EXPANSION PROJECT
TOWER LAYOUT AND
GENERAL NOTES
KUWAIT

IQC No. XX-XX-XX
TASK No. X
PROJ. No. 03NC080
CAD DESIGN FILE NAME: FILENAME

DWG. No. BMB-AS-ST-01
ST1
SCALE: AS SHOWN SHEET 1 OF SHT

• 10 Global Drive,
• Wayne, N.J. 07470
• TEL : (973) 785-4646
• FAX : (973) 785-0706
• www.hansonengineers.com

HANSON Design New Hanson Name to 98
THALES BROADCAST & MULTIMEDIA

670 North Washington St.,
Alexandria, VA. 22314
TEL : (703) 836-5644
FAX : (703) 836-3264
www.thales-bc.com