DES PLAINES RIVER, ILLINOIS
LOCAL FLOOD PROTECTION
FLOODWALL 37
RIVER RD/ MILWAUKEE AVE.

PROJECT AREA

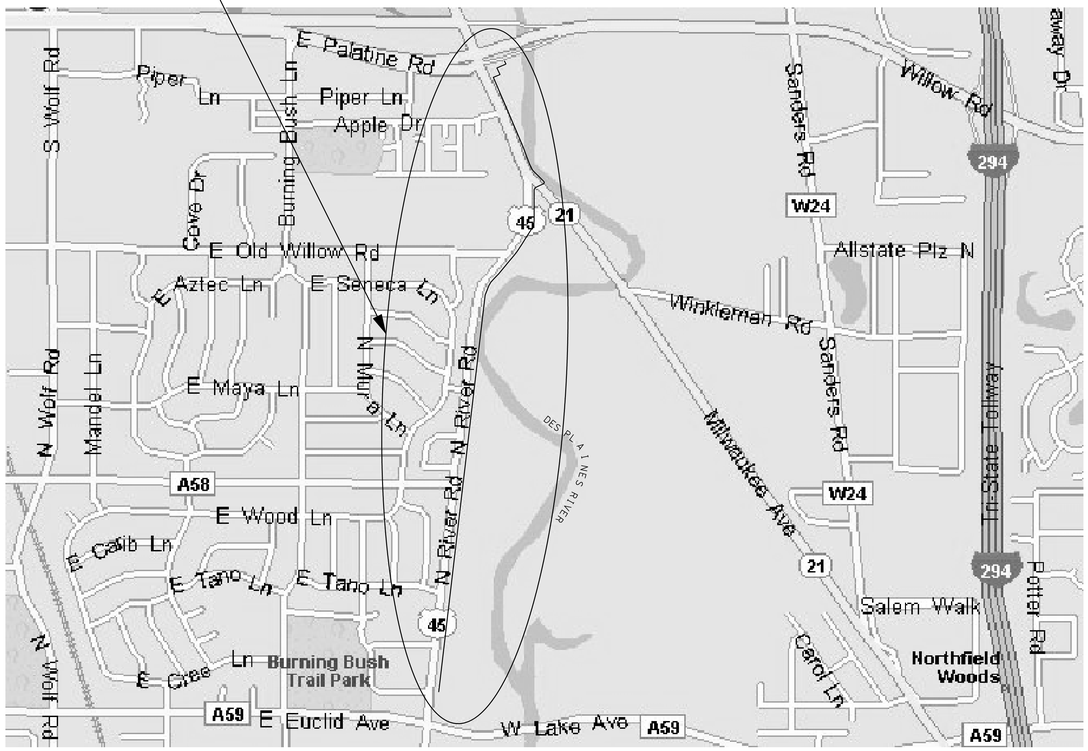

PROJECT MAP

N.T.S

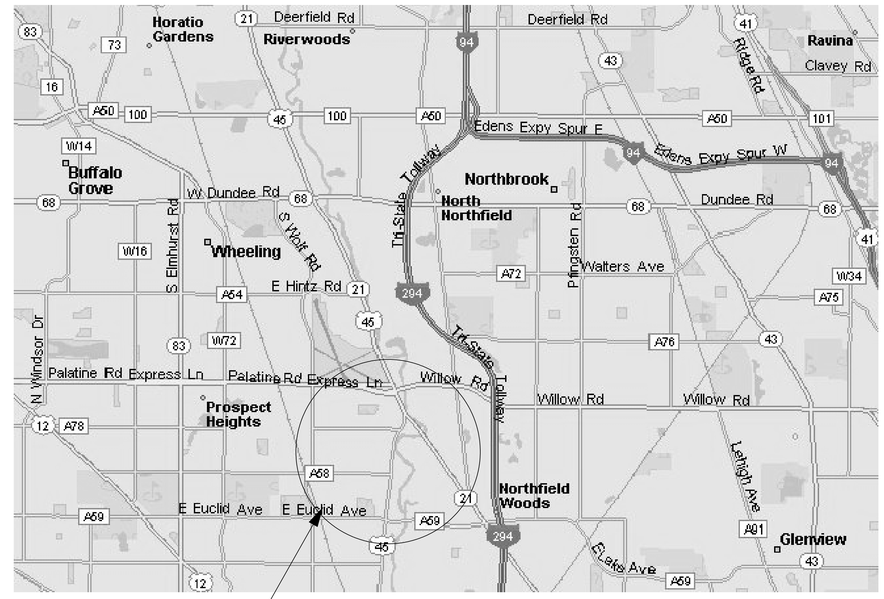

LOCALITY MAP

N.T.S

PROJECT MAP

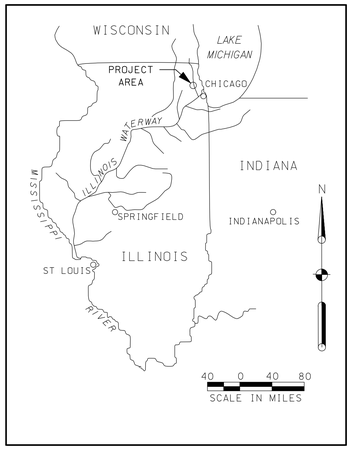

VICINITY MAP

SOLICITATION
08-18-2008

US Army Corps of Engineers
Chicago District

SYMBOL	DESCRIPTION	DATE APPROVED

SIGNATURE AFFIXED BELOW INDICATE OFFICIAL RECOMMENDATION AND APPROVAL OF ALL DRAWINGS IN THIS SET AS INDEXED ON THIS SHEET.

Reviewed By: Jay Tersko, 05-30-2008 and Dave Force, 02-26-2008 — Date
TR Team Leader
Reviewed By: Jim Wilkowski — Date
Project Manager
Recommended: Felicia Kinsey — Date
Approved By: Joseph Schmidt, P.E. — 05-30-2008
Chief, Design Branch — Date

THIS PROJECT WAS DESIGNED BY U.S. ARMY CORPS OF ENGINEERS, CHICAGO DISTRICT. THE DESIGN WAS PERFORMED IN ACCORDANCE WITH CURRENT ENGINEERING STANDARDS AND DOCUMENTS ARE OPERATING WITHIN THE SCOPE OF THEIR EMPLOYMENT. SIGNATURES ON THIS SHEET REPRESENT THE ACCEPTANCE OF THE DESIGN.

DATE: 08-18-2008
SCALE: AS SHOWN
DRAWING CODE: STORAGE AREA
W912P6-08-B-0003

U.S. ARMY ENGINEER DISTRICT
CORPS OF ENGINEERS
CHICAGO, ILLINOIS

DES PLAINES RIVER, ILLINOIS
LOCAL FLOOD PROTECTION
FLOODWALL 37
RIVER RD/MILWAUKEE AVE.

LOCALITY, PROJECT, & VICINITY MAP

SHEET REFERENCE NUMBER:
G-01
SHEET 01 OF 131

PLOT DATE: 8/18/2008
FILENAME: levee37-sht001.dgn

SHEET NO.	REFERENCE NUMBER	SHEET TITLE
01	G-01	LOCALITY, PROJECT & VICINITY MAPS
02	G-02	SHEET INDEX
03	G-03	STANDARD SYMBOLS, LEGEND, ABBREVIATIONS AND GENERAL NOTES
04	B-01	BORING LOG STA. 202+00 TO 248+20
05	B-02	BORING LOG STA. 248+20 TO 282+54
06	C-01	SURVEY CONTROL POINTS AND BENCHMARKS STA. 202+00 TO 245+00
07	C-02	SURVEY CONTROL POINTS AND BENCHMARKS STA. 245+00 TO 291+29
08	C-03	SURVEY CONTROL POINTS DETAILS
09	C-04	SURVEY OF EXISTING UTILITIES STA. 202+00 TO 221+00
10	C-05	SURVEY OF EXISTING UTILITIES STA. 221+00 TO 241+00
11	C-06	SURVEY OF EXISTING UTILITIES STA. 241+00 TO 273+80
12	C-07	SURVEY OF EXISTING UTILITIES STA. 273+80 TO 291+29
13	C-08	ULITITY TAG INFORMATION: ST 1 TO ST 143
14	C-09	ULITITY TAG INFORMATION: ST 144 TO ST 283
15	C-10	ULITITY TAG INFORMATION: ST 284 TO ST 306, SAN 1 TO SAN 23 AND WAT 1 TO WAT 13
16	C-11	WORK LIMITS AND WORK POINTS SHEET REFERENCE
17	C-12	WORK LIMITS AND WORK POINTS DATA STA. 203+16 TO 210+00
18	C-13	WORK LIMITS AND WORK POINTS DATA STA. 210+50 TO 221+00
19	C-14	WORK LIMITS AND WORK POINTS DATA STA. 221+00 TO 232+00
20	C-15	WORK LIMITS AND WORK POINTS DATA STA. 232+00 TO 243+00
21	C-16	WORK LIMITS AND WORK POINTS DATA STA. 243+00 TO 252+00
22	C-17	WORK LIMITS AND WORK POINTS DATA STA. 252+00 TO 271+50
23	C-18	WORK LIMITS AND WORK POINTS DATA STA. 271+50 TO 280+80
24	C-19	WORK LIMITS AND WORK POINTS DATA STA. 280+80 TO 291+29
25	C-19A	MILWAUKEE AVENUE FLOOD GATE CLOSURE STRUCTURE WORK LIMITS
26	C-20	UNIFIED TABLE OF CONTROL POINTS
27	C-21	SITE PLAN AND PROFILE SHEET REFERENCE
28	C-22	SITE PLAN AND PROFILE STA. 202+00 TO 205+00
29	C-23	SITE PLAN AND PROFILE STA. 205+00 TO 210+00
30	C-24	SITE PLAN STA. 210+00 TO 215+00
31	C-24A	PROFILE STA. 210+00 TO 215+00
32	C-25	SITE PLAN AND PROFILE STA. 215+00 TO 220+00
33	C-26	SITE PLAN AND PROFILE STA. 220+00 TO 225+00
34	C-27	SITE PLAN AND PROFILE STA. 225+00 TO 230+00
35	C-28	SITE PLAN AND PROFILE STA. 230+00 TO 235+50
36	C-29	SITE PLAN AND PROFILE STA. 235+50 TO 241+00
37	C-30	SITE PLAN AND PROFILE STA. 241+00 TO 245+50
38	C-31	SITE PLAN AND PROFILE STA. 245+50 TO 249+88
39	C-32	SITE PLAN AND PROFILE STA. 249+88 TO 254+76
40	C-33	SITE PLAN AND PROFILE STA. 254+75 TO 260+00
41	C-33A	SITE PLAN STA. 260+00 TO 273+20
42	C-33B	PROFILE STA. 260+00 TO 273+20
43	C-34	SITE PLAN AND PROFILE STA. 273+20 TO 275+60
44	C-35	SITE PLAN AND PROFILE STA. 275+60 TO 280+00
45	C-36	SITE PLAN AND PROFILE STA. 280+20 TO 284+00
46	C-37	SITE PLAN STA. 284+00 TO 291+29
47	C-37A	PROFILE STA. 284+00 TO 291+29
48	C-38	MILWAUKEE AVENUE FLOOD GATE CLOSURE STRUCTURE DEMOLITION/PROPOSED SITE PLAN
49	C-38A	MILWAUKEE AVENUE FLOOD GATE CLOSURE STRUCTURE UTILITY RELOCATION PLAN
50	C-38B	MILWAUKEE AVENUE FLOOD GATE CLOSURE STRUCTURE EXISTING/ PROPOSED CONDITIONS
51	C-39	DRIVEWAY # 1 PLAN, CROSS-SECTION AND DETAIL
52	C-40	DRIVEWAY # 2 DEMOLITION AND TURN AROUND DETAIL
53	C-41	DETAILS AND TYPICAL CROSS SECTIONS
54	C-42	GRAVEL PATH SECTION, TREE PROTECTION AND GUARDRAIL DETAIL
55	C-43	CROSS-SECTION STA. 204+00 TO 208+60
56	C-44	CROSS-SECTION STA. 209+00 TO 216+00
57	C-45	CROSS-SECTION STA. 217+00 TO 225+00
58	C-46	CROSS-SECTION STA. 225+51 TO 233+74
59	C-47	CROSS-SECTION STA. 234+00 TO 243+00
60	C-48	CROSS-SECTION STA. 244+00 TO 248+00
61	C-49	CROSS-SECTION STA. 249+00 TO 257+00
62	C-50	CROSS-SECTION STA. 258+00 TO 270+36
63	C-50A	CROSS-SECTION STA. 271+00 TO 279+00
64	C-50B	CROSS-SECTION STA 280+00 TO 288+00
65	C-50C	CROSS-SECTION STA. 289+00 TO 291+29
66	C-51	STANDARD DETAIL OF 72" DIA. MANHOLE & CATCH BASIN
67	C-52	MAINTENANCE OF TRAFFIC
68	C-52A	MILWAUKEE AVENUE FLOOD GATE MAINTENANCE OF TRAFFIC STANDARD AND NOTES
69	S-01	STATION 208+52.25 TO STATION 213+63.70
70	S-02	STATION 213+63.70 TO STATION 218+70.11
71	S-03	STATION 218+70.11 TO STATION 223+77.86
72	S-04	STATION 223+77.86 TO STATION 229+25.00
73	S-04A	STATION 229+25.00 TO STATION 234+32.15
74	S-04B	STATION 234+35.15 TO STATION 239+32.15
75	S-04C	STATION 239+32.15 TO STATION 244+38.80
76	S-04D	STATION 244+38.80 TO STATION 249+55.21
77	S-04E	STATION 249+55.21 TO STATION 254+48.66
78	S-04F	STATION 254+48.66 TO STATION 259+16.60
79	S-04G	STATION 259+16.60 TO STATION 263+35.79
80	S-04H	STATION 270+35.78 TO STATION 273+26.54
81	S-04I	STATION 273+26.54 TO STATION 277+60.70
82	S-04J	STATION 277+60.70 TO STATION 282+49.08
83	S-04K	STATION 282+49.08 TO STATION 287+46.24
84	S-04L	STATION 287+46.24 TO STATION 291+28.56
85	S-05	SHEET PILE I-WALLS TYPICAL SECTIONS
86	S-06	SHEET PILE I-WALLS TYPICAL SECTIONS
87	S-07	DETAILS
88	S-08	PUMP STATION #1 AND CLOSURE #1 PLAN AND ELEVATIONS
89	S-09	PUMP STATION #1 AND CLOSURE #1 SECTIONS SHEET 1
90	S-10	PUMP STATION #1 AND CLOSURE #1 SECTION SHEET 2
91	S-11	CLOSURE #2 PLAN AND ELEVATIONS
92	S-12	CLOSURE #2 SECTIONS
93	S-13	CLOSURE #3 AND #4 PLAN, ELEVATIONS AND SECTIONS
94	S-14	CLOSURE #5 PLAN, ELEVATIONS AND SECTIONS
95	S-15	BACKFLOW STRUCTURE NO. 1, STRUCTURAL ADDITIONS, PLAN, ELEVATIONS AND SECTIONS
96	S-15A	EXISTING BACKFLOW STRUCTURES NO. 1 AND NO. 2 PLAN AND SECTIONS
97	S-16	PUMP STATION #2 PLAN AND ELEVATIONS
98	S-17	PUMP STATION #2 SECTIONS
99	S-18	CLOSURES #6 AND #7 PLAN AND ELEVATIONS
100	S-19	CLOSURES #6 AND #7 SECTIONS
101	S-20	CLOSURE #8 ELEVATIONS AND SECTIONS
102	S-20A	DEMOLITION PLAN FOR EXISTING SERVICE VAULT & CLOSURE #8 DETAILS
103	S-21	CLOSURE #9 PLAN, ELEVATIONS AND SECTIONS
104	S-22	PUMP STATION #3 & CLOSURE #10 PLAN AND ELEVATIONS
105	S-23	PUMP STATION #3 & CLOSURE #10 BOX SECTIONS
106	S-24	PUMP STATION #3 & CLOSURE #10 PUMP STATION SECTIONS
107	S-25	INDOT PUMP STATION PIPE PASSING
108	S-26	NOT USED
109	S-27	MISCELLANEOUS DETAILS
110	S-28	STANDARD DETAILS
111	SG-01	MILWAUKEE AVENUE FLOOD GATE CLOSURE STRUCTURE GENERAL PLAN
112	SG-02	MILWAUKEE AVENUE FLOOD GATE CLOSURE STRUCTURE FOUNDATIONS, PLANS AND ELEVATIONS
113	SG-03	MILWAUKEE AVENUE FLOOD GATE CLOSURE STRUCTURE ELEVATION AND SECTIONS
114	SG-04	MILWAUKEE AVENUE FLOOD GATE CLOSURE STRUCTURE PLAN, ELEVATION AND SECTION
115	SG-05	MILWAUKEE AVENUE FLOOD GATE CLOSURE STRUCTURE PLAN, ELEVATION AND SECTION
116	SG-06	MILWAUKEE AVENUE FLOOD GATE CLOSURE STRUCTURE MISC. SECTIONS AND DETAILS
117	SG-07	MILWAUKEE AVENUE FLOOD GATE CLOSURE STRUCTURE MISC. SECTIONS AND DETAILS
118	SG-08	MILWAUKEE AVENUE FLOOD GATE CLOSURE STRUCTURE MISC. SECTIONS AND DETAILS
119	SG-09	MILWAUKEE AVENUE FLOOD GATE CLOSURE STRUCTURE MISC. SECTIONS AND DETAILS
120	SG-10	MILWAUKEE AVENUE FLOOD GATE CLOSURE STRUCTURE MISC. SECTIONS AND DETAILS
121	M-01	PUMP STATION #1 PLAN & SECTIONS
122	M-02	PUMP STATION #2 PLAN & SECTIONS
123	M-03	PUMP STATION #3 PLAN & SECTIONS
124	M-04	DETAILS & SCHEDULES
125	M-05	DETAILS & SCHEDULES
126	M-06	TRASH RACK AND RAKE DETAILS
127	E-01	ELECTRICAL SYSTEM PUMP STATION NO. 1 & 3 MCC, ONE-LINE DIAGRAM & CONTROLLER DIAGRAM
128	E-02	ELECTRICAL SYSTEM PUMP STATION NO.2 MCC, ONE-LINE DIAGRAM & CONTROLLER DIAGRAM
129	E-03	ELECTRICAL SYSTEM PUMP STATION #1 PLAN, SECTIONS & DETAILS
130	E-04	ELECTRICAL SYSTEM PUMP STATION #2 PLAN, SECTIONS & DETAILS
131	E-05	ELECTRICAL SYSTEM PUMP STATION #3 PLAN, SECTIONS & DETAILS

US Army Corps of Engineers
Chicago District

SYMBOL	AMENDMENT DESCRIPTION	DATE APPROVED	SYMBOL	DESCRIPTION	DATE APPROVED

DESIGNED BY: GA | DATE: 08-18-2008
DRAWN BY: GA | SCALE: AS SHOWN
CHECKED BY: JT | SOLICITATION NUMBER: W912P6-08-B-0003
SUBMITTED BY: JOHN GROBOSKI, P.E. 08-18-08 | DATE:

U.S.ARMY ENGINEER DISTRICT
CORPS OF ENGINEERS
CHICAGO, ILLINOIS

DES PLAINES RIVER, ILLINOIS
LOCAL FLOOD PROTECTION
FLOODWALL 37
RIVER RD/MILWAUKEE AVE.

SHEET INDEX

SHEET REFERENCE NUMBER:
G-02
SHEET 02 OF 131

PLOT DATE: 8/18/2008
FILENAME: levee37-sht002.dgn

LEGEND

- NATURAL GAS VALVE (NICOR)
- NATURAL GAS LINE (NICOR)
- OVERHEAD POWER, TELEPHONE, CATV LINES
- UTILITY POLE
- FIRE HYDRANT
- WATER VALVE
- WATER VALVE VAULT
- WATER SERVICE VALVE (BBOX)
- WATERMAIN
- FLARED END SECTION OR HEADWALL
- EXISTING STORM SEWER LINE
- EXISTING STORM SEWER LINE SHOWING PIPE DIA.
- PROPOSED STORM SEWER LINE SHOWING PIPE DIA.
- EXISTING CATCH BASIN
- PROPOSED CATCH BASIN
- EXISTING STORM SEWER MANHOLE
- PROPOSED STORM SEWER MANHOLE
- CURB INLET
- AT&T FIBER OPTIC LINE (UNDERGROUND)
- SANITARY SEWER LINE
- SANITARY SEWER FORCEMAIN
- SANITARY MANHOLE
- COMED MANHOLE
- COMED UTILITY RISER
- UNDERGROUND COMED ELECTRIC LINE
- STREET LIGHT
- PHONE RISER (AMERITECH OR CENTEL PHONE)
- UNDERGROUND TELEPHONE (AMERITECH OR CENTEL)
- TRAFFIC SIGNAL HANDHOLE
- TRAFFIC SIGNAL DOUBLE HANDHOLE
- I.D.O.T. TRAFFIC CONTOLLER BOX
- TRAFFIC SIGNAL
- EXISTING GROUND
- EXISTING TREE TO REMAIN
- REMOVE EXISTING TREE
- PROTECTED TREE
- WORK LIMITS
- PERMANENT EASEMENT
- FLOODWALL CENTERLINE
- VEGETATION LINE
- EXISTING SWALE
- PROPOSED SWALE
- 201+00 TO 282+54 — DES PLAINES RIVER ROAD AND MILWAUKEE ROAD FLOODWALL CENTERLINE STATIONING
- PROPOSED GUARDRAIL
- EXISTING GUARDRAIL
- GRAVEL PATH
- DITCH SIDE SLOPE
- GRADE SLOPE

STANDARD ABBREVIATIONS

℄	CENTERLINE
RCP	REINFORCED CONCRETE PIPE
BCCSP	BITUMINOUS COATED CORRUGATED STEEL PIPE
ELEV.	ELEVATION
B.M.	BENCHMARK
PI	POINT OF INTERSECTION
PC	POINT OF CURVATURE
PT	POINT OF TANGENCY
U.S. INV.	UPSTREAM INVERT
D.S. INV.	DOWNSTREAM INVERT
O.C.	ON CENTER
WL	WATER LEVEL
CMP	CORRUGATED METAL PIPE
NGVD	NATIONAL GEODETIC VERTICAL DATUM OF 1927
MSL	MEAN SEA LEVEL
G	GAS PIPELINE
W	WATERMAIN
EOC	END OF CONSTRUCTION
EF	EACH FACE
FF	FAR FACE
NF	NEAR FACE
L.F.	LINEAL FEET
R	RADIUS
LBS.	POUNDS
N	NORTHING
E	EASTING
NOM.	NOMINAL
N/A	NOT APPLICABLE
′	FEET
″	INCHES
EJ	EXPANSION JOINT
CJ	CONTRACTION JOINT
IEPA	ILLINOIS ENVIRONMENTAL PROTECTION AGENCY
IDOT	ILLINOIS DEPARTMENT OF TRANSPORTATION
FPD	FOREST PRESERVE DISTRICT
AWWA	AMERICAN WATERWORKS ASSOCIATION
RT/LT	RIGHT OR LEFT OF FLOODWALL ALIGNMENT
ASTM	AMERICAN SOCIETY FOR TESTING AND MATERIALS
PL	ELECTRIC POWER LINE
T	TELEPHONE LINE
O	OIL PIPELINE
R.H.F.	RIGHT HAND FORWARD
N.T.S.	NOT TO SCALE
D.I.P.	DUCTILE IRON PIPE
TOH	TOP OF HOLE
BOH	BOTTOM OF HOLE
PCBC	PRECAST CONCRETE BOX CULVERT
CL.	CLEAR
PRC	POINT OF REVERSE CURVATURE
PVI	POINT OF VERTICAL INTERSECTION
PVC	POINT OF VERTICAL CURVATURE
PVT	POINT OF VERTICAL TANGENCY
L	LENGTH OF CURVE
∗	INTERIOR ANGLE
LT.	LEFT
RT.	RIGHT
TOC	TOP OF CASTING
TYP.	TYPICAL
POT	POINT OF TANGENCY
SY	SQUARE YARD
BIT.	BITUMINOUS
STA.	STATION
H.P.	HIGH POINT
EOP	EDGE OF PAVEMENT
AVE.	AVERAGE
O.D.	OUTER DIAMETER
W/	WITH
DIA.	DIAMETER
NO.	NUMBER
#	NUMBER
MIN.	MINIMUM
MAX.	MAXIMUM
P.V.C.	POLYVINYL CHLORIDE
DBH	DIAMETER BREAST HEIGHT
CLSM	CONTROLLED LOW-STRENGHT MATERIAL
SSP	STEEL SHEET PILE

SOIL BORING LOG LEGEND & SYMBOLS

GRAPHIC LOG SYMBOLS

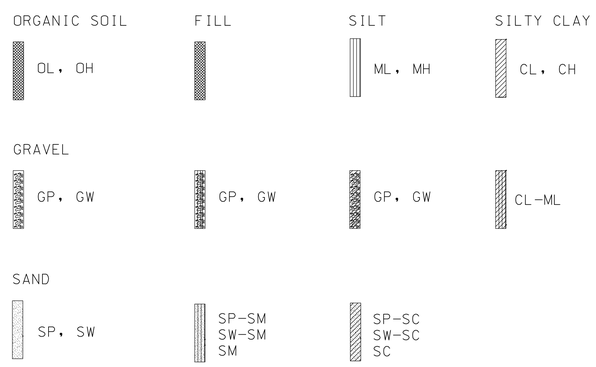

LEGEND

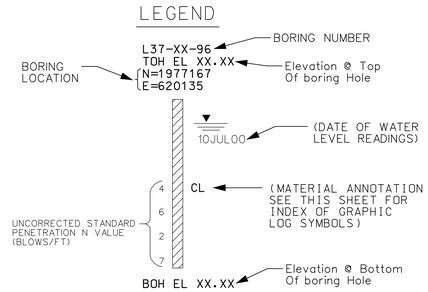

GENERAL NOTES

1. THE CONTRACTOR SHALL FOLLOW ALL GOVERNING REGULATION AND SHALL OBTAIN ALL NECESSARY PUBLIC AGENCY PERMITS. PERMITS SHALL BE OBTAINED FROM THE ILLINOIS DEPARTMENT OF TRANSPORTATION, THE COOK COUNTY FOREST PRESERVE AND OTHER AGENCIES AS REQUIRED PRIOR TO COMMENCING WITH CONSTRUCTION. PERMIT FOR DEWATERING OPERATIONS, DISCHARGE OF GROUNDWATER AND PLACEMENT AND REMOVAL OF TEMPORARY COFFERDAMS SHALL BE OBTAINED FROM THE STATE OF ILLINOIS.

2. BEFORE BEGINNING CONSTRUCTION, THE CONTRACTOR SHALL VERIFY ALL CRITICAL DIMENSIONS, LOCATIONS AND ELEVATIONS BEFORE PROCEEDING WITH PROPOSED WORK. CONTRACTOR SHALL IMMEDIATELY NOTIFY THE CONTRACTING OFFICER'S AUTHORIZED REPRESENTATIVE OF ANY SIGNIFICANT DISCREPANCIES.

3. BEFORE START OF CONSTRUCTION, THE CONTRACTOR SHALL CONSULT WITH ALL UTILITY SYSTEM OWNERS.

4. THE CONTRACTOR SHALL CALL JULIE (JOINT UTILITY LOCATING INFORMATION FOR EXCAVATORS) AT 1-800-892-0123 NO LESS THAN 48 HOURS BEFORE START OF EXCAVATION.

5. NO BURNING OR INCINERATION OF RUBBISH WILL BE PERMITTED ON THE SITE.

6. PAVEMENT, UTILITIES, SIGNS, TRAFFIC SIGNALS AND OTHER FACILITIES TO REMAIN SHALL BE PROTECTED FROM DAMAGE AND IF DAMAGED, SHALL BE REPLACED TO THE SATISFACTION OF THE OWNER AND AT NO COST TO THE GOVERNMENT. ANY PAVEMENT, UTILITY, OR OTHER FACILITY WITHIN THE RIGHT-OF-WAY WHICH IS REMOVED TO ACCOMMODATE CONSTRUCTION ACTIVITY OR DAMAGED DURING CONSTRUCTION SHALL BE REPLACED IN KIND AT NO COST TO THE GOVERNMENT.

7. THE SURVEY CONDITIONS SHOWN ON THESE DRAWINGS IS FROM A 2000 SURVEY PERFORMED BY BOLLINGER LACH & ASSOCIATES AND REPRESENTS CONDITIONS EXISTING AT THAT TIME. EXISTING CONDITIONS DURING CONSTRUCTION MAY VARY AND DIFFER FROM THOSE SHOWN. CONTRACTOR SHALL TAKE ALL NECESSARY ACTIONS TO ASSESS THE EXISTING CONDITIONS AT THE TIME OF BIDDING, AND INCLUDE COST ACCORDINGLY IN THE BID.

8. EXCEPT WHERE INDICATED, ELEVATIONS SHOWN REFER TO THE ELEVATION IN FEET ABOVE THE NATIONAL GEODETIC VERTICAL DATUM (NGVD) OF 1929. NAVD 88 = NGVD 29 - 0.2

9. ALL WORK SHALL BE PREFORMED IN ACCORDANCE WITH EM 385-1-1, DATED 3 NOVEMBER 2003, U.S. ARMY CORPS OF ENGINEERS, SAFETY AND HEALTH REQUIREMENTS MANUAL.

10. ALL STAGING, STORAGE AND TEMPORARY EASEMENT ALONG THE ROADSIDE AND RIVERSIDE AREAS SHALL BE RESTORED TO PRE-CONSTRUCTION GRADE AND CONDITIONS.

11. STATION REFERENCE PERTAIN TO CENTERLINE OF THE FLOODWALL.

12. ANYTHING MENTIONED IN SPECS AND NOT IN DRAWINGS AND VICE VERSA SHALL BE OF LIKE EFFECT AS IF SHOWN OR MENTIONED IN BOTH. IN CASE OF DIFFERENCE BETWEEN DRAWINGS AND SPECS, THE SPECS SHALL GOVERN.

13. PRIOR TO COMMENCEMENT OF ON-SITE ACTIVITIES AND MOBILIZATION, THE CONTRACTOR SHALL VIDEO PROJECT SITE AND SUBMIT THESE VIDEOS AS DOCUMENTATION OF EXISTING PHYSICAL CONDITIONS. IN ACCORDANCE TO SECTION 01100, GENERAL PROVISIONS.

14. ALL CONSTRUCTION ACTIVITIES SHALL BE PERFORMED FROM THE LANDSIDE. NO CONSTRUCTION EQUIPMENT IS ALLOWED ON THE RIVERSIDE SIDE.

15. THE CONTRACTOR SHALL MAINTAIN ACCESS TO THE FPD PARKING LOT AT ALL TIMES.

16. THE CONTRACTOR SHALL MAINTAIN EXISTING DRAINAGE PATHS AND CULVERTS TO PREVENT FLOODING OF STREETS AND RESIDENTS DUE TO CONSTRUCTION ACTIVITIES.

17. DURING POTENTIAL AND ACTUAL FLOOD EVENTS ON THE DESPLAINES RIVER, THE CONTRACTOR SHALL MEET WITH LOCAL COMMUNITIES (M†. PROSPECT AND PROSPECT HEIGHTS) TO COORDINATE THE FLOOD FIGHTING EFFORTS OF THE CONTRACTOR WITH THAT OF THE LOCAL COMMUNITIES.

18. THERE MAYBE OTHER CONSTRUCTION WORK BY IDOT'S CONTRACTOR WITHIN OUR WORK LIMITS. THE CONTRACTOR SHALL COORDINATES WITH IDOT'S CONTRACTOR AS NEEDED. IDOT PROPOSED ROAD RAISE CONSTRUCTION IS SHOWN FOR INFORMATION ONLY.

19. THE EXISTING TRAFFIC SIGNALS ALONG IL 21 AND IL 45 SHALL BE IN WORKING CONDITIONS AT ALL TIMES.

US Army Corps of Engineers
Chicago District

SYMBOL	AMENDMENT DESCRIPTION	DATE APPROVED	SYMBOL	DESCRIPTION	DATE APPROVED

DESIGNED BY: GA — DATE: 08-18-2008
DRAWN BY: GA — SCALE: AS SHOWN
CHECKED BY: JT — SOLICITATION NUMBER: W912P6-08-B-0003
SUBMITTED BY: JOHN GROBOSKI, P.E. — DATE: 08-18-08

U.S.ARMY ENGINEER DISTRICT
CORPS OF ENGINEERS
CHICAGO, ILLINOIS

DES PLAINES RIVER, ILLINOIS
LOCAL FLOOD PROTECTION
FLOODWALL 37
RIVER RD/MILWAUKEE AVE.
STANDARD SYMBOLS, LEGEND, ABBREVIATIONS AND GENERAL NOTES

SHEET REFERENCE NUMBER:
G-03
SHEET 03 OF 131

PLOT DATE: 8/18/2008
FILENAME: lrrwa37-sht003.dgn

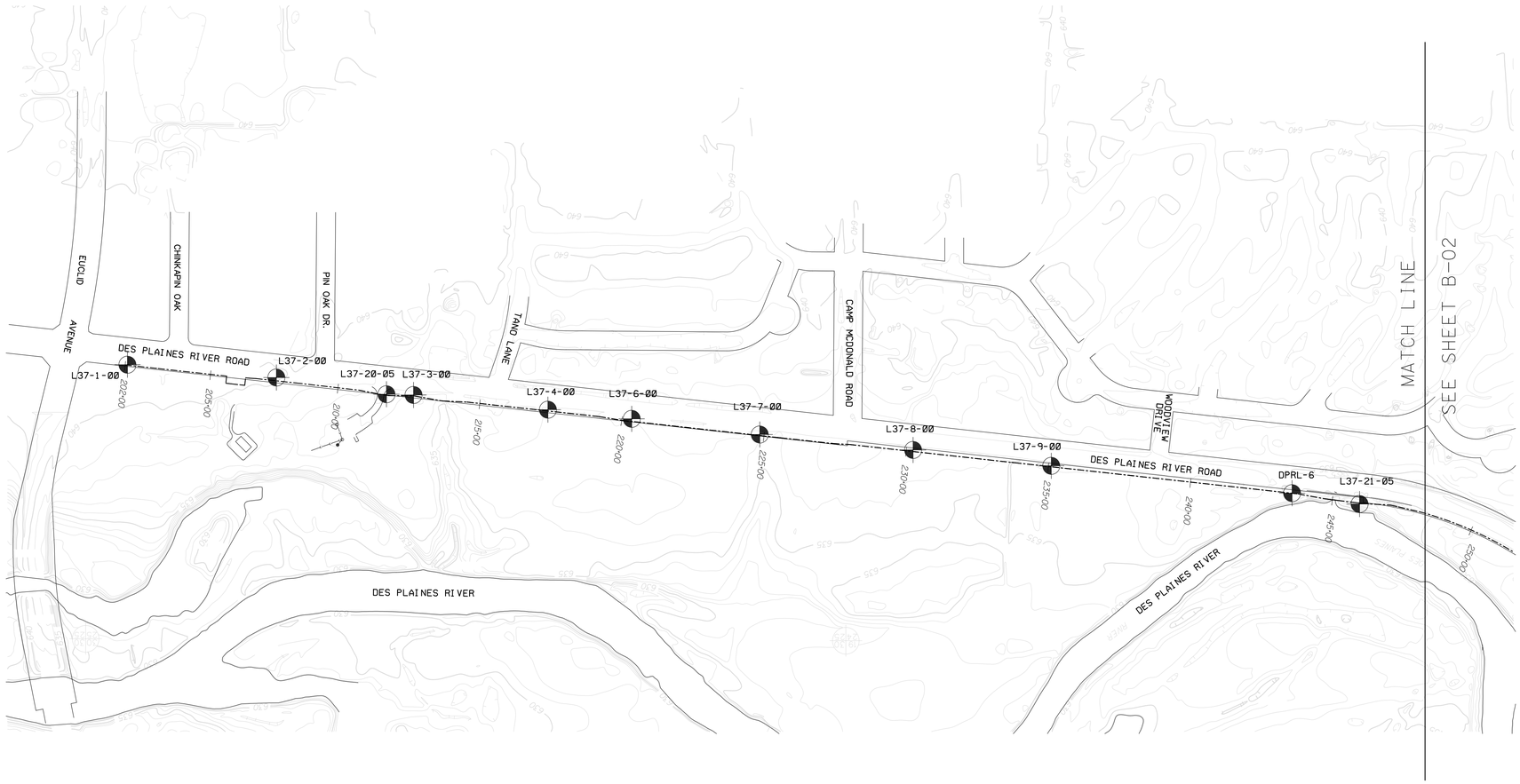

NOTE:

THE BORING LOGS ARE INCLUDED IN SPECIFICATION SECTION 00800-A.

200 100 0 200 400
HORIZONTAL SCALE IN FEET

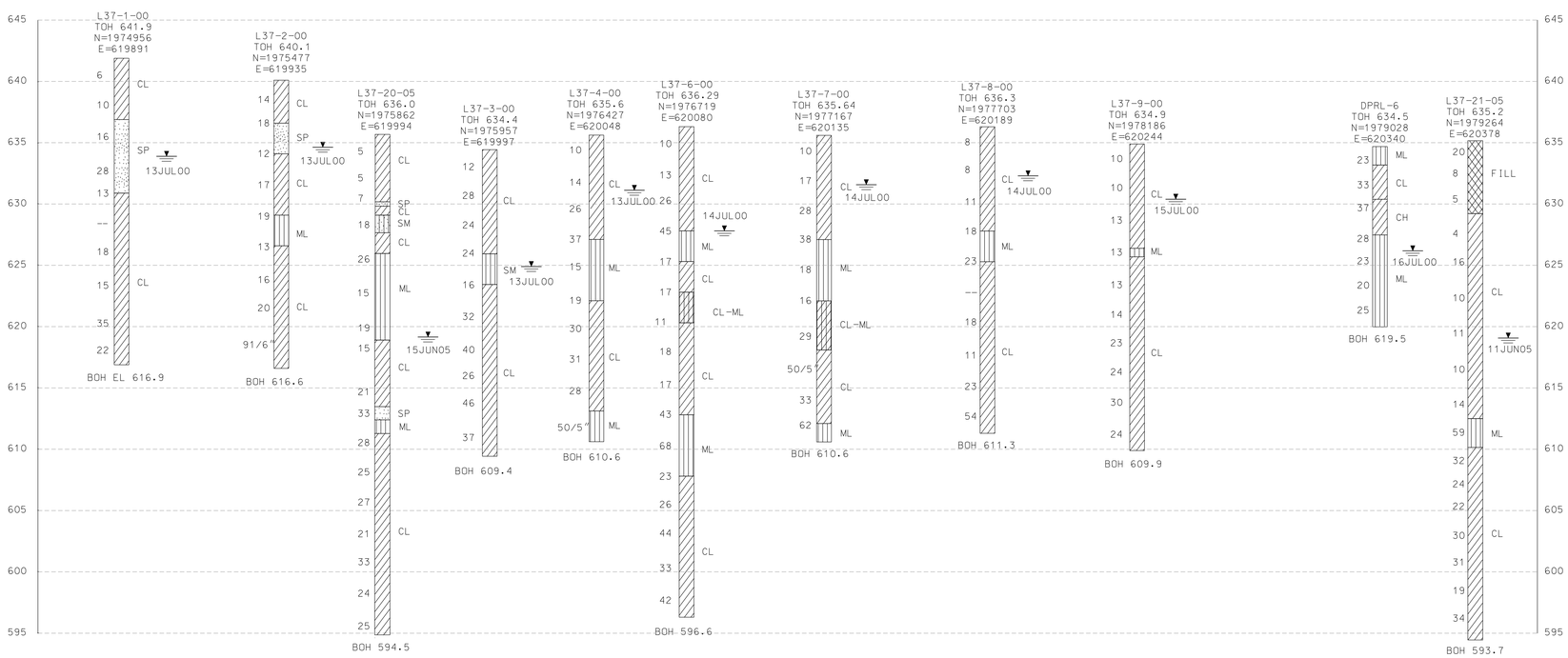

5 0 5 10
VERTICAL SCALE IN FEET

US Army Corps of Engineers
Chicago District

SYMBOL	AMENDMENT DESCRIPTION	DATE APPROVED	SYMBOL	DESCRIPTION	DATE APPROVED

DESIGNED BY: GA
DATE: 08-18-2008
DRAWN BY: GA
SCALE: AS SHOWN
CHECKED BY: JT
SOLICITATION NUMBER: W912P6-08-B-0003
SUBMITTED BY: JOHN GROBOSKI, P.E.
DATE: 08-18-08

U.S. ARMY ENGINEER DISTRICT
CORPS OF ENGINEERS
CHICAGO, ILLINOIS

DES PLAINES RIVER, ILLINOIS
LOCAL FLOOD PROTECTION
FLOODWALL 37
RIVER RD/MILWAUKEE AVE.

BORING LOG
STA. 202+00 TO 248+20

SHEET REFERENCE NUMBER:
B-01

PLOT DATE: 8/18/2008
FILENAME: levee37-sht801.dgn

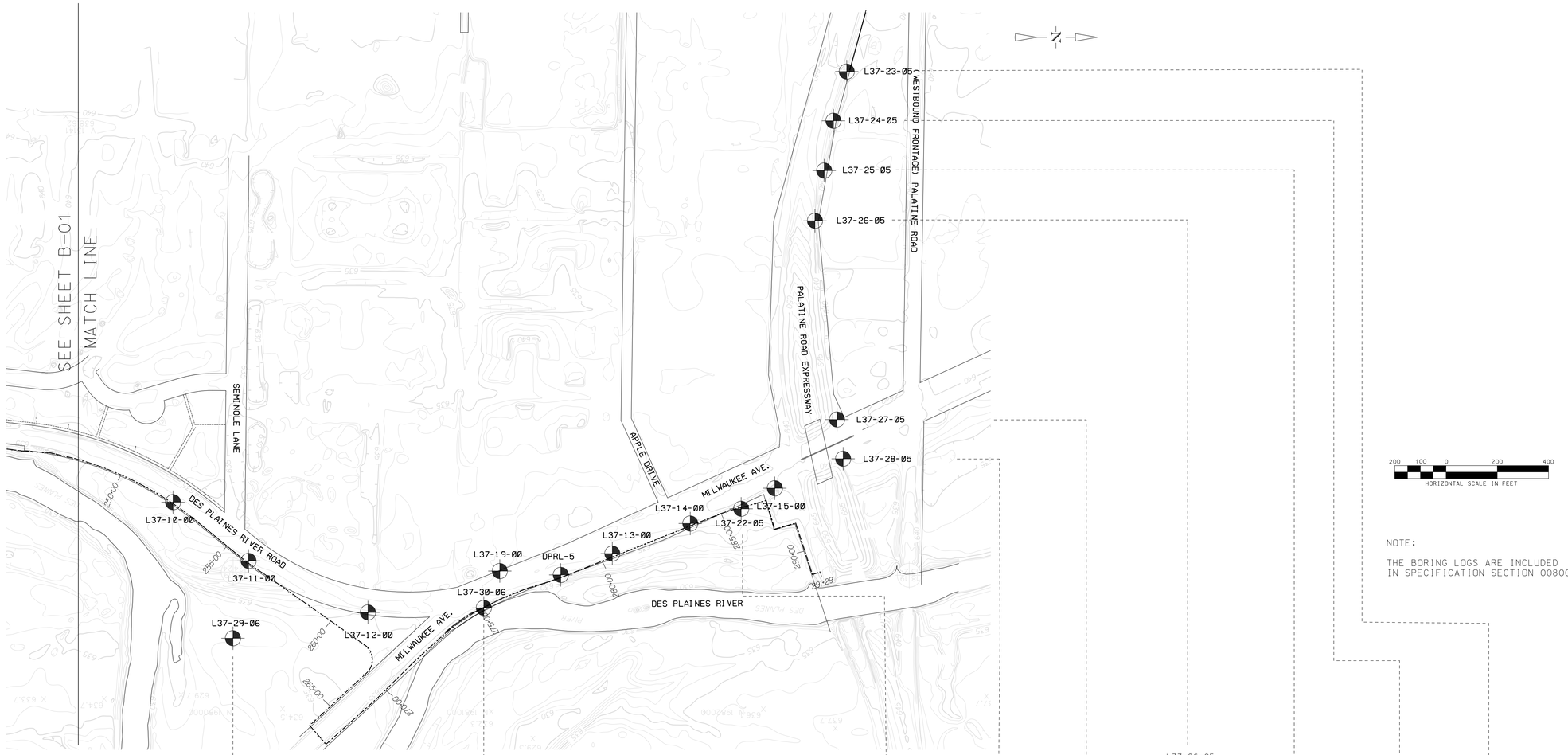

NOTE:

THE BORING LOGS ARE INCLUDED IN SPECIFICATION SECTION 00800-A.

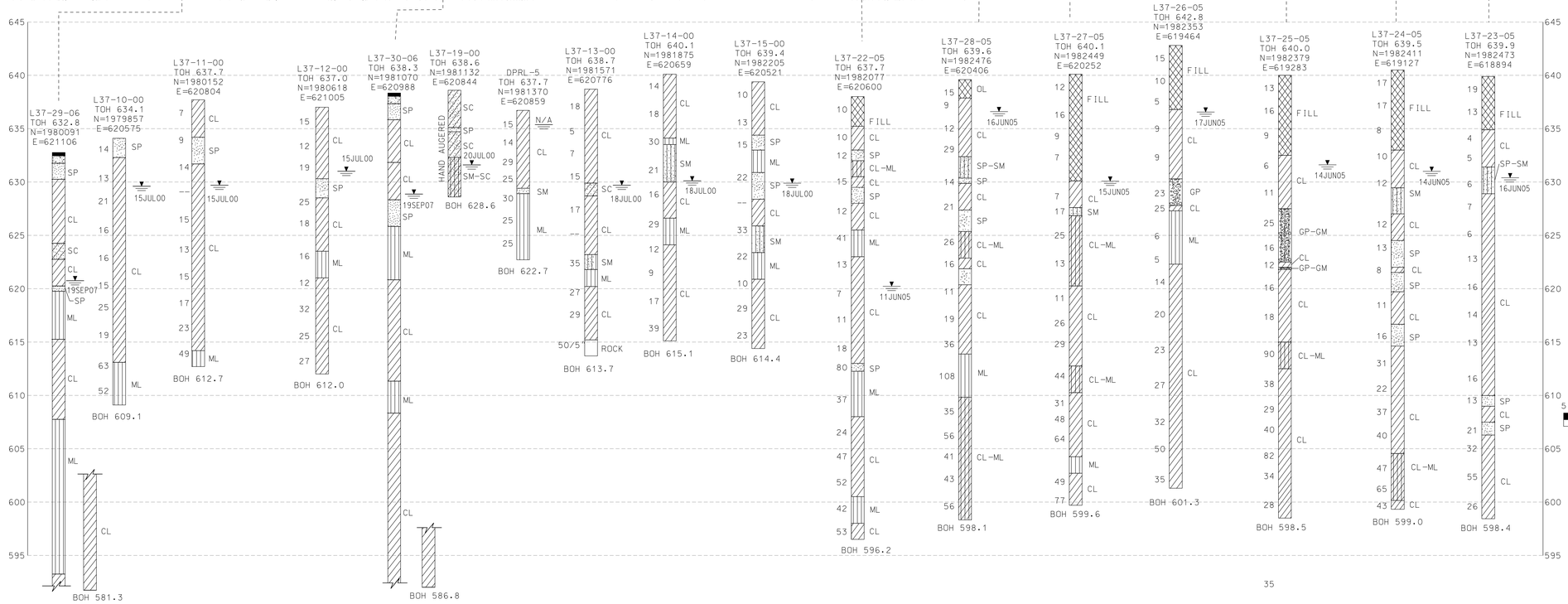

US Army Corps of Engineers Chicago District

SYMBOL	AMENDMENT DESCRIPTION	DATE	APPROVED	SYMBOL	DESCRIPTION	DATE	APPROVED

U.S.ARMY ENGINEER DISTRICT
CORPS OF ENGINEERS
CHICAGO, ILLINOIS

DESIGNED BY: GA | DATE: 08-18-2008
DRAWN BY: GA | SCALE: AS SHOWN
CHECKED BY: JT | SOLICITATION NUMBER: W912P6-08-B-0003
JOHN GROBOSKI, P.E. 08-18-08
SUBMITTED BY: | DATE:

DES PLAINES RIVER, ILLINOIS
LOCAL FLOOD PROTECTION
FLOODWALL 37
RIVER RD/MILWAUKEE AVE.

BORING LOG
STA. 248+20 TO 291+29

SHEET REFERENCE NUMBER:
B-02
SHEET 05 OF 131

PLOT DATE: 8/18/2008
FILENAME: levee37-shtB02.dgn

35

BENCHMARK DESCRIPTIONS

BM #7:
CUT "□" ON WEST SIDE OF HIGHWAY 45, NORTH OF WEIR STRUCTURE AND SOUTH OF OLD WILLOW ROAD ON SOUTH END OF FLARED END SECTION. ELEV = 632.25

BM #9:
RAILROAD SPIKE IN EAST SIDE OF POWER POLE ON WEST SIDE OF HIGHWAY 45, FIVE POWER POLES NORTH OF CAMP MCDONALD ROAD. ELEV = 636.95

BM #10:
NORTHWEST CORNER OF INTERSECTION OF HIGHWAY 45 AND CAMP MCDONALD ROAD AT SOUTHWEST CORNER OF TRAFFIC CONTROL BOX, CUT "□". ELEV = 638.57

BM #11:
RAILROAD SPIKE IN EAST SIDE OF POWER POLE ON WEST SIDE OF HIGHWAY 45, FOUR POWER POLES SOUTH OF CAMP MCDONALD ROAD. ELEV = 638.08

BM #12:
CUT "□" IN NORTH END OF CONCRETE FLARED END SECTION AT NORTHWEST CORNER OF INTERSECTION OF HIGHWAY 45 AND TANO LANE. ELEV = 637.16

BM #13:
CUT "□" IN CURB AT NORTHWEST CORNER OF INTERSECTION OF HIGHWAY 45 AND PIN OAK DRIVE DIRECTLY EAST OF POWER POLE. ELEV = 639.60

BM #14:
WEST FLANGE BOLT ON FIRE HYDRANT AT NORTHWEST CORNER OF INTERSECTION OF HIGHWAY 45 AND CHINKAPINOAK DRIVE. ELEV = 642.47

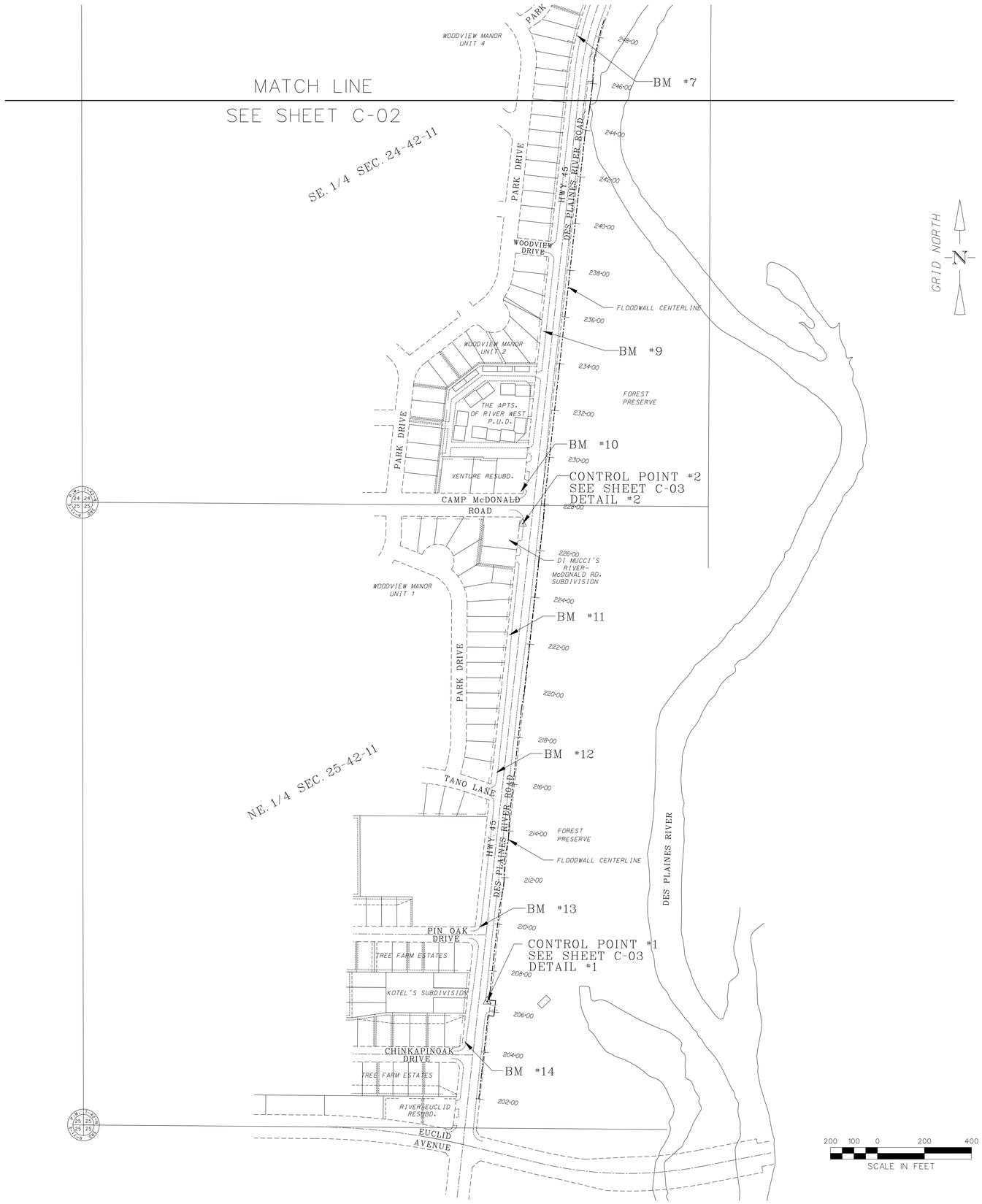

US Army Corps of Engineers
Chicago District

SYMBOL	AMENDMENT DESCRIPTION	DATE APPROVED	SYMBOL	DESCRIPTION	DATE APPROVED

DESIGNED BY: GA
DRAWN BY: GA
CHECKED BY: JT
SUBMITTED BY: JOHN GROBOSKI, P.E.
DATE: 08-18-2008
SCALE: AS SHOWN
SOLICITATION NUMBER: W912P6-08-B-0003
DATE: 08-18-08

U.S. ARMY ENGINEER DISTRICT
CORPS OF ENGINEERS
CHICAGO, ILLINOIS

DES PLAINES RIVER, ILLINOIS
LOCAL FLOOD PROTECTION
FLOODWALL 37
RIVER RD/MILWAUKEE AVE.
SURVEY CONTROL POINTS
AND BENCHMARKS
STA. 202+00 TO 245+00

SHEET REFERENCE NUMBER:
C-01
SHEET 06 OF 131

PLOT DATE: 8/18/2008
FILENAME: levee37-sht01.dgn

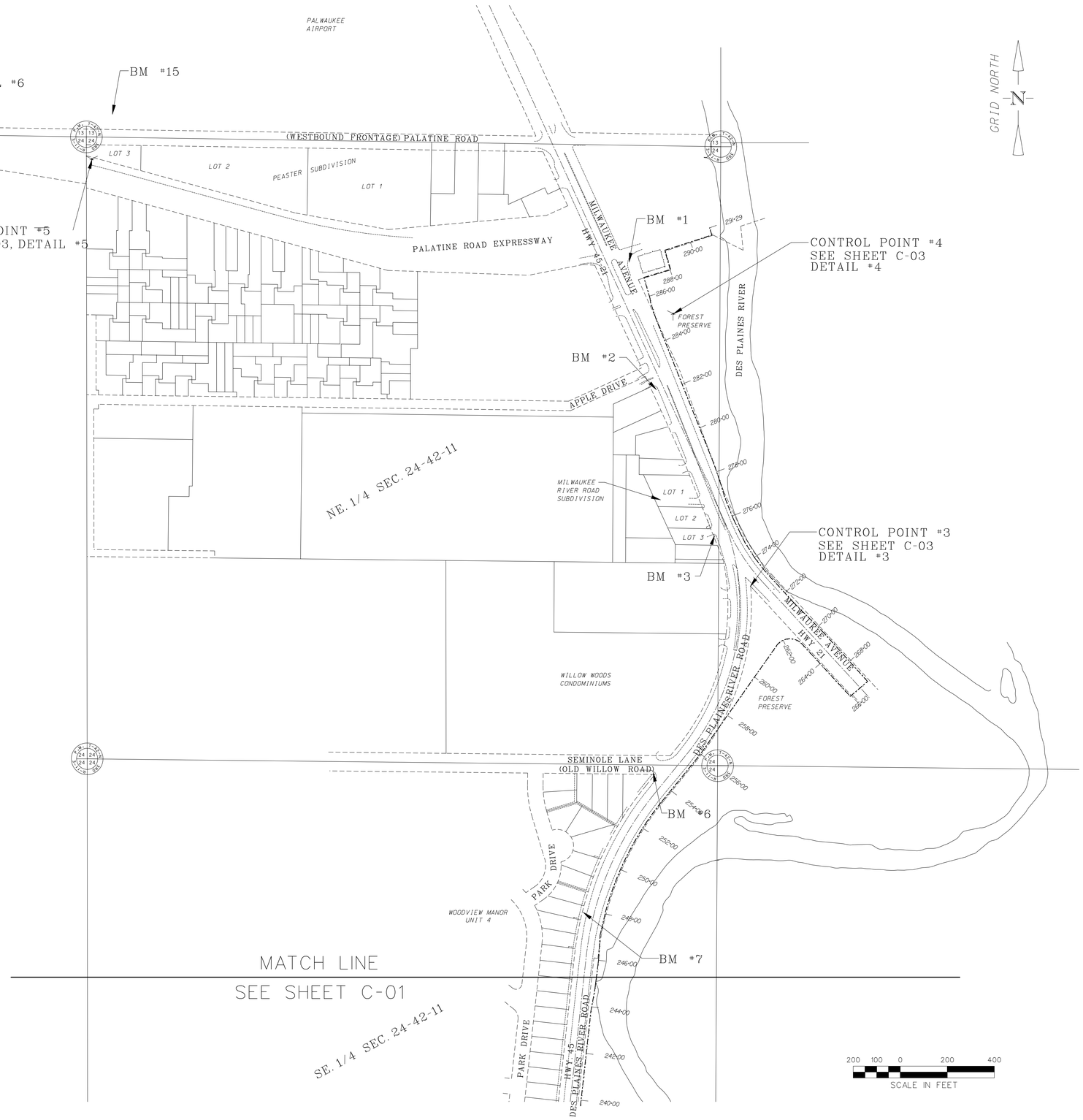

BENCHMARK DESCRIPTIONS

BM #1:
SOUTHEAST CORNER OF HIGHWAY 45 AND WILLOW ROAD AT SOUTHEAST CORNER OF METAL LID OF TRAFFIC CONTROL BOX, CUT "□". ELEV = 640.76

BM #2:
SOUTHWEST CORNER OF HIGHWAY 45 AND APPLE DRIVE ON WEST SIDE OF CONCRETE TRAFFIC LIGHT POLE BASE, CUT "□". ELEV = 639.86

BM #3:
SOUTHWEST CORNER OF HIGHWAY 45 AND EXEL INN ENTRANCE AT NORTHWEST CORNER OF CONCRETE PAD OF TRAFFIC CONTROL BOX, CUT "□". ELEV = 638.70

BM #6:
SOUTHWEST CORNER OF HIGHWAY 45 AND OLD WILLOW ROAD ON WEST SIDE OF CONCRETE TRAFFIC LIGHT POLE BASE, CUT "□". ELEV = 636.37

BM #7:
CUT "□" ON WEST SIDE OF HIGHWAY 45, NORTH OF WEIR STRUCTURE AND SOUTH OF OLD WILLOW ROAD ON SOUTH END OF FLARED END SECTION. ELEV = 632.25

BM #15:
WESTBOUND PALATINE EXPRESS LANE ENTRANCE ON NORTH SIDE OF ROAD, SOUTH OF AIRPORT FENCE ON NORTHWEST CORNER OF WESTERNMOST OF TWO CONCRETE TRANSFORMER PADS, CUT "□". ELEV = 639.98

US Army Corps of Engineers
Chicago District

SYMBOL	AMENDMENT DESCRIPTION	DATE APPROVED	SYMBOL	DESCRIPTION	DATE APPROVED

DESIGNED BY: GA
DATE: 08-18-2008
DRAWN BY: GA
SCALE: AS SHOWN
CHECKED BY: JT
SOLICITATION NUMBER: W912P6-08-B-0003
JOHN GROBOSKI, P.E.
DATE: 08-18-08
SUBMITTED BY:

U.S.ARMY ENGINEER DISTRICT
CORPS OF ENGINEERS
CHICAGO, ILLINOIS

DES PLAINES RIVER, ILLINOIS
LOCAL FLOOD PROTECTION
FLOODWALL 37
RIVER RD/MILWAUKEE AVE.
SURVEY CONTROL POINTS
AND BENCHMARKS
STA. 245+00 TO 291+29

SHEET REFERENCE NUMBER:
C-02
SHEET 07 OF 131

PLOT DATE: 8/18/2008
FILENAME: levee37-sht02.dgn

DETAIL #1

COUNTRY U.S.A.	TYPE OF MARK 5/8" SIB W/CAP	STATION CONTROL POINT #1	
LOCALITY MT. PROSPECT COOK COUNTY, IL.	STAMPING ON MARK CONTROL POINT	AGENCY (CAST IN MARKS)	ELEVATION (FT) ~~(M)~~ 640.92
LATITUDE 42° 05' 21.08124" (N)	LONGITUDE 087° 53' 29.45374" (W)	DATUM NAD27	DATUM NGVD 29
(NORTHING)~~(EASTING)~~ (FT) ~~(M)~~ 1975363.71	(EASTING)~~(NORTHING)~~ (FT) ~~(M)~~ 619927.46	GRID AND ZONE ILLINOIS EAST	ESTABLISHED BY (AGENCY)
(NORTHING)(EASTING) (FT) (M)	(EASTING)(NORTHING) (FT) (M)	GRID AND ZONE	DATE MAR. 2000 / ORDER

TO OBTAIN GRID AZIMUTH. ADD TO THE GEODETIC AZIMUTH

TO OBTAIN GRID AZ. (ADD)(SUB) TO THE GEODETIC AZIMUTH

OBJECT	AZIMUTH OR DIRECTION (GEODETIC)(GRID) (MAGNETIC)	BACK AZIMUTH	GEOD DISTANCE (METERS) (FEET)	GRID DISTANCE (METERS) (FEET)

CONTROL POINT #1
5/8" SET IRON BAR WITH YELLOW CAP MARKED CONTROL POINT

1. PK IN SOUTHWEST FACE OF 14" DECIDUOUS TREE 45.12' NORTHEAST OF CONTROL POINT.
2. CONTROL POINT 1.70' NORTHEAST OF BACK OF CURB ALONG NORTH SIDE OF SOUTH ENTRANCE OF FOREST PRESERVE.
3. CHISELED X IN TOP OF CURB ON NORTH CURB OF FOREST PRESERVE (SOUTH ENTRANCE) 31.48' SOUTHEAST OF CONTROL POINT.
4. CHISELED X IN TOP OF CURB ON SOUTH CURB NEXT TO GATE POST OF FOREST PRESERVE (SOUTH ENTRANCE) 43.17' SOUTHEAST OF CONTROL POINT.

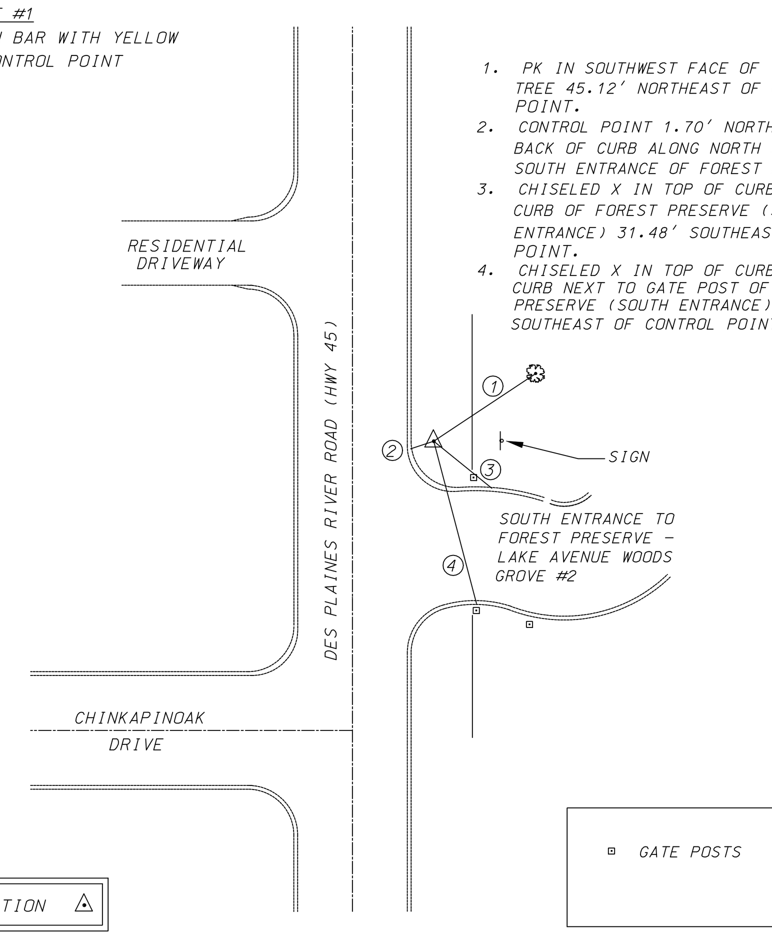

DETAIL #2

COUNTRY U.S.A.	TYPE OF MARK 5/8" SIB W/CAP	STATION CONTROL POINT #2	
LOCALITY MT. PROSPECT COOK COUNTY, IL.	STAMPING ON MARK CONTROL POINT	AGENCY (CAST IN MARKS)	ELEVATION (FT) ~~(M)~~ 637.91
LATITUDE 42° 05' 41.15302" (N)	LONGITUDE 087° 53' 27.31390" (W)	DATUM NAD27	DATUM NGVD 29
(NORTHING)~~(EASTING)~~ (FT) ~~(M)~~ 1977396.29	(EASTING)~~(NORTHING)~~ (FT) ~~(M)~~ 620078.29	GRID AND ZONE ILLINOIS EAST	ESTABLISHED BY (AGENCY)
(NORTHING)(EASTING) (FT) (M)	(EASTING)(NORTHING) (FT) (M)	GRID AND ZONE	DATE MAR. 2000 / ORDER

TO OBTAIN GRID AZIMUTH. ADD TO THE GEODETIC AZIMUTH

TO OBTAIN GRID AZ. (ADD)(SUB) TO THE GEODETIC AZIMUTH

OBJECT	AZIMUTH OR DIRECTION (GEODETIC)(GRID) (MAGNETIC)	BACK AZIMUTH	GEOD DISTANCE (METERS) (FEET)	GRID DISTANCE (METERS) (FEET)

CONTROL POINT #2
5/8" SET IRON BAR WITH YELLOW CAP MARKED CONTROL POINT

1. CONTROL POINT 3.55' WEST OF BACK OF CURB OF DES PLAINES RIVER ROAD.
2. PK IN NORTH FACE OF POWER POLE 54.45' SOUTH OF CONTROL POINT.
3. CHISELED X IN EAST SIDE OF CONCRETE BASE OF TRAFFIC LIGHT POST 15.48' NORTH OF CONTROL POINT.
4. CHISELED X IN SOUTH SIDE OF CONCRETE BASE OF TRAFFIC LIGHT POST 45.20' NORTHWEST OF CONTROL POINT.

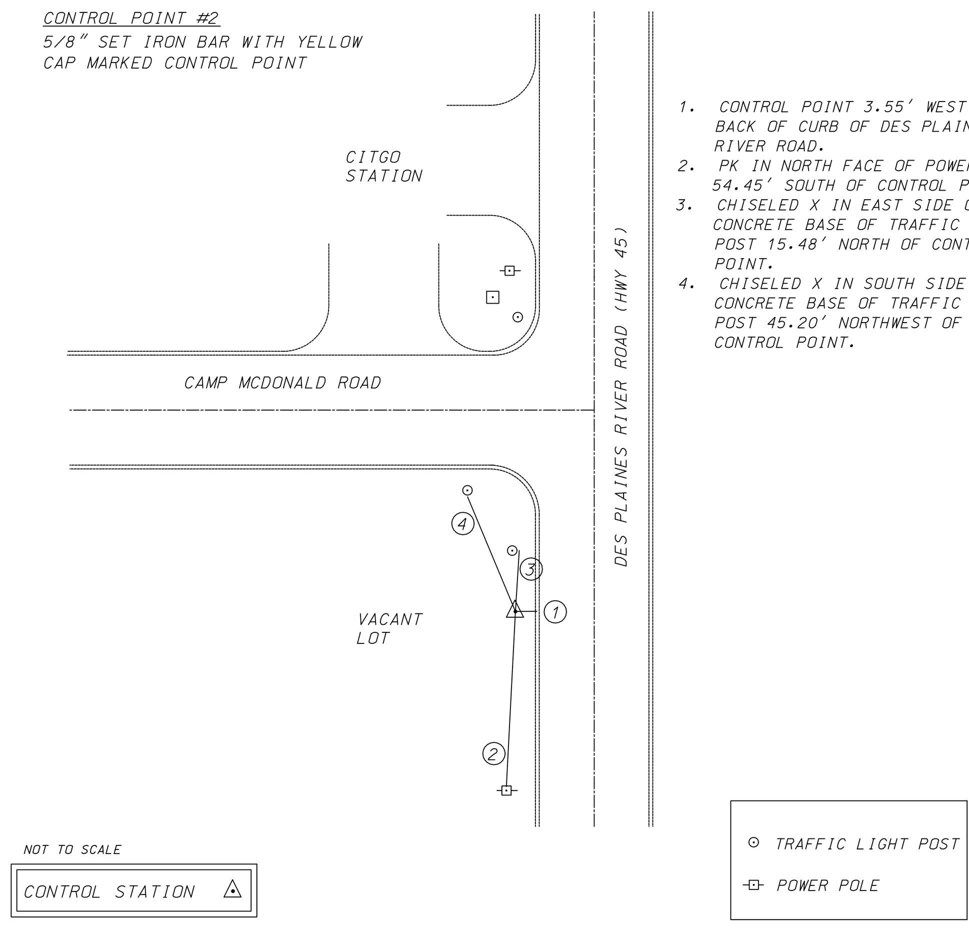

DETAIL #3

COUNTRY U.S.A.	TYPE OF MARK 5/8" SIB W/CAP	STATION CONTROL POINT #3	
LOCALITY PROSPECT HEIGHTS COOK COUNTY, IL.	STAMPING ON MARK CONTROL POINT	AGENCY (CAST IN MARKS)	ELEVATION (FT) ~~(M)~~ 637.53
LATITUDE 42° 06' 15.28727" (N)	LONGITUDE 087° 53' 14.57984" (W)	DATUM NAD27	DATUM NGVD 29
(NORTHING)~~(EASTING)~~ (FT) ~~(M)~~ 1980856.48	(EASTING)~~(NORTHING)~~ (FT) ~~(M)~~ 621020.33	GRID AND ZONE ILLINOIS EAST	ESTABLISHED BY (AGENCY)
(NORTHING)(EASTING) (FT) (M)	(EASTING)(NORTHING) (FT) (M)	GRID AND ZONE	DATE MAR. 2000 / ORDER

TO OBTAIN GRID AZIMUTH. ADD TO THE GEODETIC AZIMUTH

TO OBTAIN GRID AZ. (ADD)(SUB) TO THE GEODETIC AZIMUTH

OBJECT	AZIMUTH OR DIRECTION (GEODETIC)(GRID) (MAGNETIC)	BACK AZIMUTH	GEOD DISTANCE (METERS) (FEET)	GRID DISTANCE (METERS) (FEET)

CONTROL POINT #3
5/8" SET IRON BAR WITH YELLOW CAP MARKED CONTROL POINT

1. PK IN NORTH FACE OF WESTERLY OF TWO POSTS FOR SIGN FOR FOREST PRESERVE 37.68' SOUTHEAST OF CONTROL POINT.
2. CHISELED X IN SOUTH SIDE OF CONCRETE LIGHT POLE BASE (AXB8) 19.23' NORTH OF CONTROL POINT.
3. CHISELED X IN NORTH SIDE OF CONCRETE LIGHT POLE BASE (AXB7) 16.20' SOUTHWEST OF CONTROL POINT.

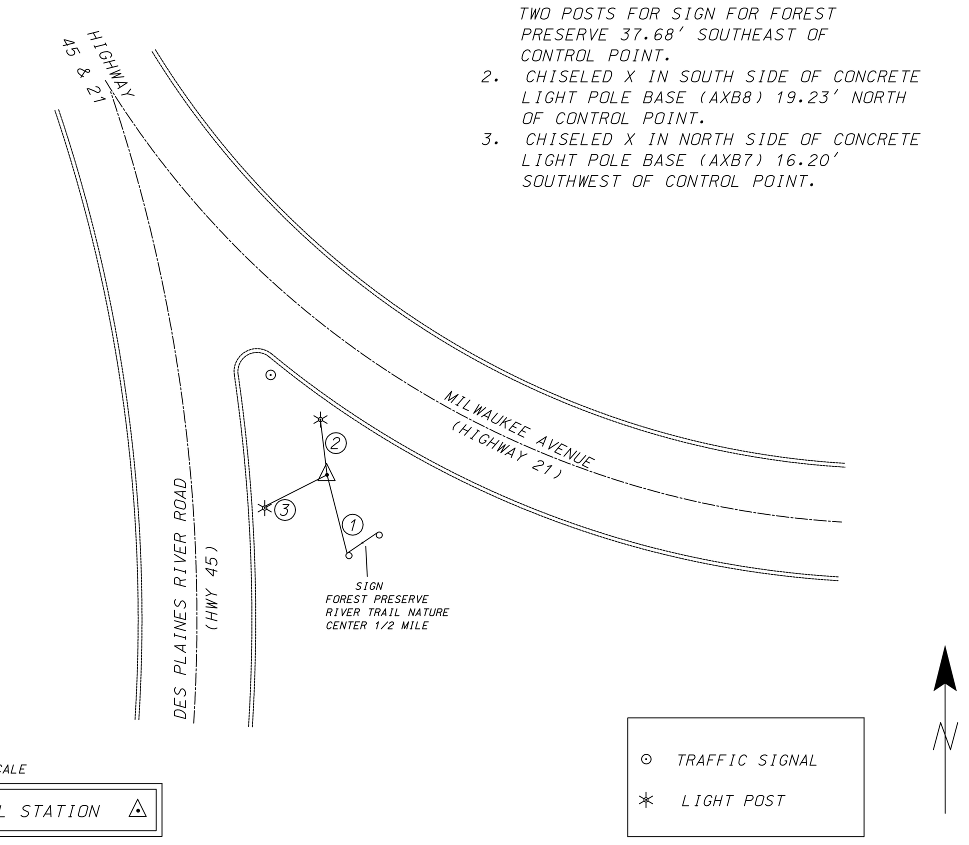

DETAIL #4

COUNTRY U.S.A.	TYPE OF MARK 5/8" SIB W/CAP	STATION CONTROL POINT #4	
LOCALITY PROSPECT HEIGHTS COOK COUNTY, IL.	STAMPING ON MARK CONTROL POINT	AGENCY (CAST IN MARKS)	ELEVATION (FT) ~~(M)~~ 640.20
LATITUDE 42° 06' 26.86961" (N)	LONGITUDE 087° 53' 20.17924" (W)	DATUM NAD27	DATUM NGVD 29
(NORTHING)~~(EASTING)~~ (FT) ~~(M)~~ 1982026.69	(EASTING)~~(NORTHING)~~ (FT) ~~(M)~~ 620592.14	GRID AND ZONE ILLINOIS EAST	ESTABLISHED BY (AGENCY)
(NORTHING)(EASTING) (FT) (M)	(EASTING)(NORTHING) (FT) (M)	GRID AND ZONE	DATE MAR. 2000 / ORDER

TO OBTAIN GRID AZIMUTH. ADD TO THE GEODETIC AZIMUTH

TO OBTAIN GRID AZ. (ADD)(SUB) TO THE GEODETIC AZIMUTH

OBJECT	AZIMUTH OR DIRECTION (GEODETIC)(GRID) (MAGNETIC)	BACK AZIMUTH	GEOD DISTANCE (METERS) (FEET)	GRID DISTANCE (METERS) (FEET)

CONTROL POINT #4
5/8" SET IRON BAR WITH YELLOW CAP MARKED CONTROL POINT

1. CHISELED X ON SOUTHEAST CORNER OF HANDHOLE 1.32' NORTH OF CONTROL POINT.
2. CHISELED X ON SOUTHWEST CORNER OF HANDHOLE 2.17' NORTHWEST OF CONTROL POINT.
3. CONTROL POINT 6.6' NORTHEAST OF EDGE OF PAVEMENT OF HIGHWAY 45-21.
4. CHISELED X ON TOP OF CURB WHERE CURB ENDS 62.03' SOUTH OF CONTROL POINT.

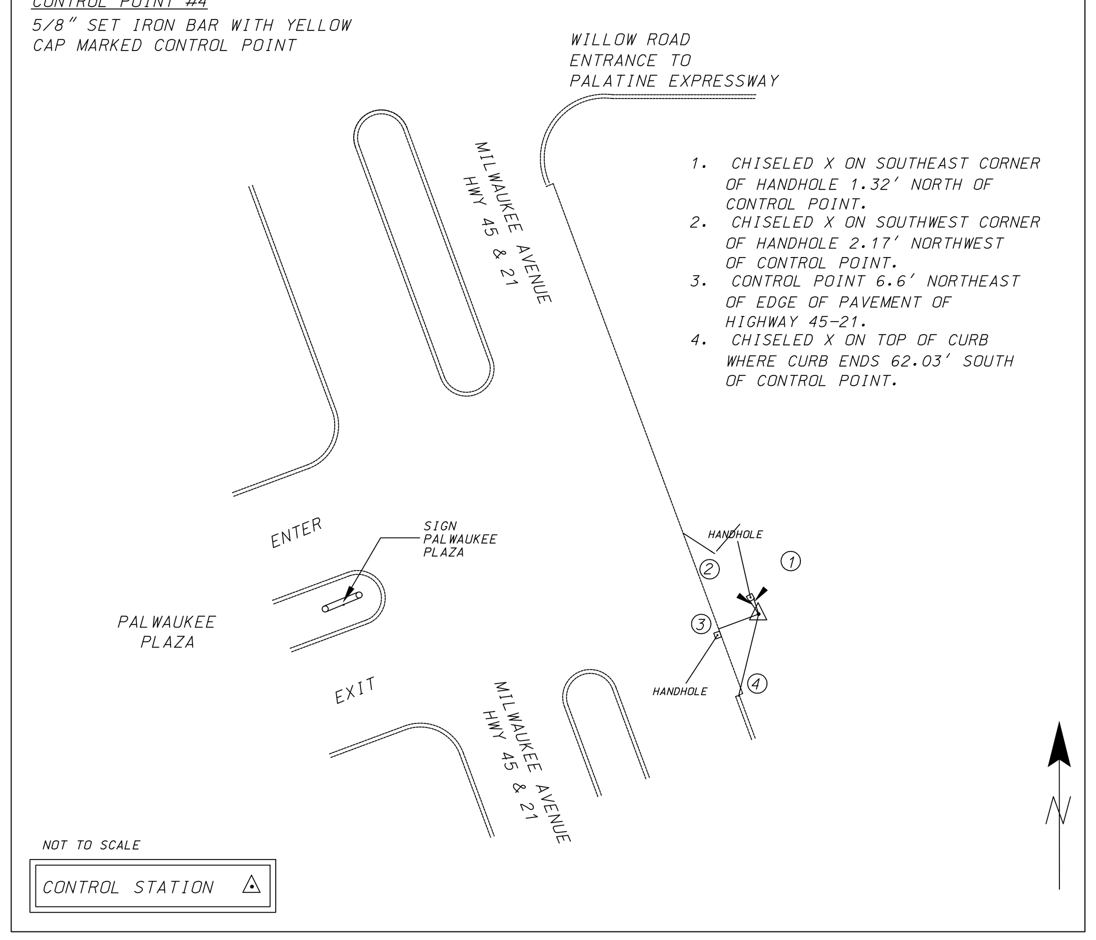

DETAIL #5

COUNTRY U.S.A.	TYPE OF MARK 5/8" SIB W/CAP	STATION CONTROL POINT #5	
LOCALITY PROSPECT HEIGHTS COOK COUNTY, IL.	STAMPING ON MARK CONTROL POINT	AGENCY (CAST IN MARKS)	ELEVATION (FT) ~~(M)~~ 643.74
LATITUDE 42° 06' 33.48894" (N)	LONGITUDE 087° 53' 52.92785" (W)	DATUM NAD27	DATUM NGVD 29
(NORTHING)~~(EASTING)~~ (FT) ~~(M)~~ 1982684.02	(EASTING)~~(NORTHING)~~ (FT) ~~(M)~~ 618120.18	GRID AND ZONE ILLINOIS EAST	ESTABLISHED BY (AGENCY)
(NORTHING)(EASTING) (FT) (M)	(EASTING)(NORTHING) (FT) (M)	GRID AND ZONE	DATE MAR. 2000 / ORDER

TO OBTAIN GRID AZIMUTH. ADD TO THE GEODETIC AZIMUTH

TO OBTAIN GRID AZ. (ADD)(SUB) TO THE GEODETIC AZIMUTH

OBJECT	AZIMUTH OR DIRECTION (GEODETIC)(GRID) (MAGNETIC)	BACK AZIMUTH	GEOD DISTANCE (METERS) (FEET)	GRID DISTANCE (METERS) (FEET)

CONTROL POINT #5
5/8" SET IRON BAR WITH YELLOW CAP MARKED CONTROL POINT

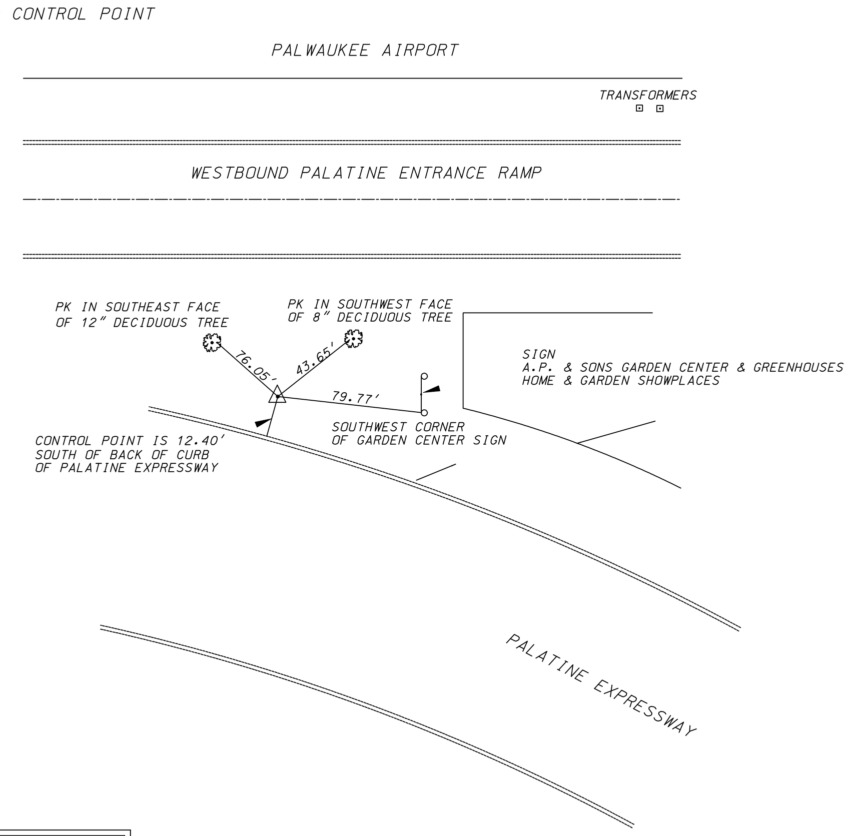

DETAIL #6

COUNTRY U.S.A.	TYPE OF MARK 5/8" SIB W/CAP	STATION CONTROL POINT #6	
LOCALITY PROSPECT HEIGHTS COOK COUNTY, IL.	STAMPING ON MARK CONTROL POINT	AGENCY (CAST IN MARKS)	ELEVATION (FT) ~~(M)~~ 643.49
LATITUDE 42° 06' 34.91891" (N)	LONGITUDE 087° 54' 10.38002" (W)	DATUM NAD27	DATUM NGVD 29
(NORTHING)~~(EASTING)~~ (FT) ~~(M)~~ 1982822.11	(EASTING)~~(NORTHING)~~ (FT) ~~(M)~~ 616803.96	GRID AND ZONE ILLINOIS EAST	ESTABLISHED BY (AGENCY)
(NORTHING)(EASTING) (FT) (M)	(EASTING)(NORTHING) (FT) (M)	GRID AND ZONE	DATE MAR. 2000 / ORDER

TO OBTAIN GRID AZIMUTH. ADD TO THE GEODETIC AZIMUTH

TO OBTAIN GRID AZ. (ADD)(SUB) TO THE GEODETIC AZIMUTH

OBJECT	AZIMUTH OR DIRECTION (GEODETIC)(GRID) (MAGNETIC)	BACK AZIMUTH	GEOD DISTANCE (METERS) (FEET)	GRID DISTANCE (METERS) (FEET)

CONTROL POINT #6
5/8" SET IRON BAR WITH YELLOW CAP MARKED CONTROL POINT

1. CHISELED X IN CONCRETE BASE OF FENCE CORNER 44.42' NORTHEAST OF CONTROL POINT.
2. CHISELED X IN TOP OF CURB WEST OF ENTRANCE TO PREISTER AVIATION SERVICE & PARTS 68.99' SOUTHEAST OF CONTROL POINT.
3. CONTROL POINT 12.55' NORTH OF BACK OF CURB ON NORTH SIDE OF PALANTINE EXPRESSWAY FRONTAGE ROAD.
4. CHISELED X IN TOP OF CURB 33.00' SOUTHWEST OF CONTROL POINT.

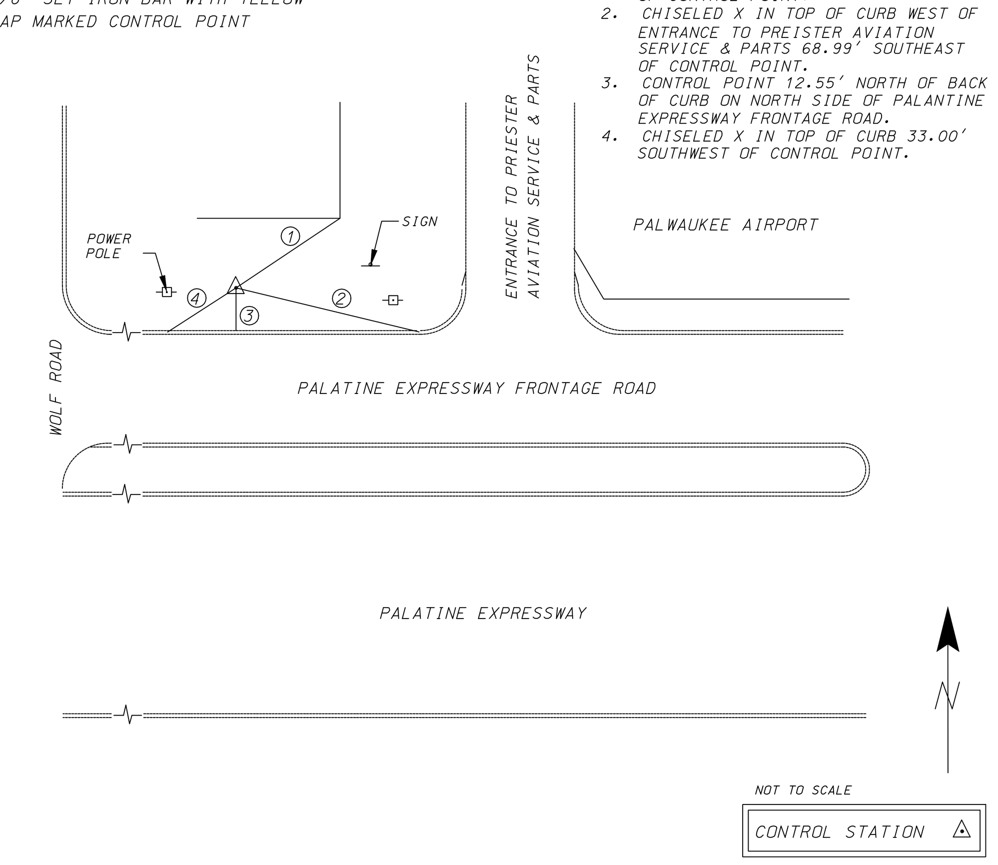

US Army Corps of Engineers Chicago District

SYMBOL	AMENDMENT DESCRIPTION	DATE	APPROVED	SYMBOL	DESCRIPTION	DATE	APPROVED

DESIGNED BY: GA	DATE: 08-18-2008	U.S.ARMY ENGINEER DISTRICT CORPS OF ENGINEERS CHICAGO, ILLINOIS
DRAWN BY: GA	SCALE: AS SHOWN	
CHECKED BY: JT	SOLICITATION NUMBER: W912P6-08-B-0003	
JOHN GROBOSKI, P.E. SUBMITTED BY:	08-18-08 DATE:	

DES PLAINES RIVER, ILLINOIS
LOCAL FLOOD PROTECTION
FLOODWALL 37
RIVER RD/MILWAUKEE AVE.

SURVEY CONTROL POINTS DETAILS

SHEET REFERENCE NUMBER:
C-03

SHEET 08 OF 131

PLOT DATE: 8/18/2008
FILENAME: levee37-shC03.dgn

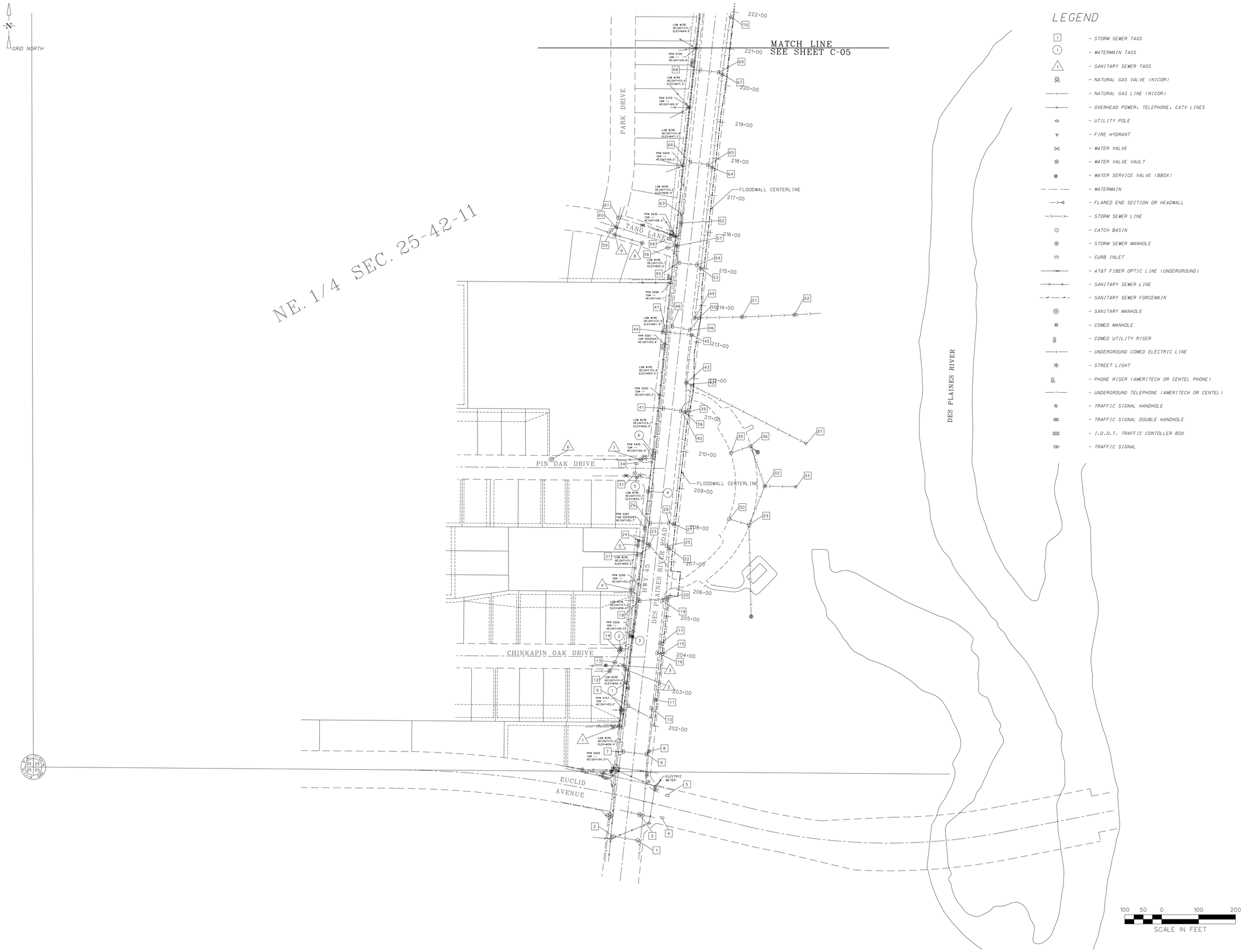

LEGEND

- STORM SEWER TAGS
- WATERMAIN TAGS
- SANITARY SEWER TAGS
- NATURAL GAS VALVE (NICOR)
- NATURAL GAS LINE (NICOR)
- OVERHEAD POWER, TELEPHONE, CATV LINES
- UTILITY POLE
- FIRE HYDRANT
- WATER VALVE
- WATER VALVE VAULT
- WATER SERVICE VALVE (BBOX)
- WATERMAIN
- FLARED END SECTION OR HEADWALL
- STORM SEWER LINE
- CATCH BASIN
- STORM SEWER MANHOLE
- CURB INLET
- AT&T FIBER OPTIC LINE (UNDERGROUND)
- SANITARY SEWER LINE
- SANITARY SEWER FORCEMAIN
- SANITARY MANHOLE
- COMED MANHOLE
- COMED UTILITY RISER
- UNDERGROUND COMED ELECTRIC LINE
- STREET LIGHT
- PHONE RISER (AMERITECH OR CENTEL PHONE)
- UNDERGROUND TELEPHONE (AMERITECH OR CENTEL)
- TRAFFIC SIGNAL HANDHOLE
- TRAFFIC SIGNAL DOUBLE HANDHOLE
- I.D.O.T. TRAFFIC CONTOLLER BOX
- TRAFFIC SIGNAL

US Army Corps of Engineers
Chicago District

SYMBOL	AMENDMENT DESCRIPTION	DATE APPROVED	SYMBOL	DESCRIPTION	DATE APPROVED

DESIGNED BY: GA
DATE: 08-18-2008
DRAWN BY: GA
SCALE: AS SHOWN
CHECKED BY: JT
SOLICITATION NUMBER: W912P6-08-B-0003
SUBMITTED BY: JOHN GROBOSKI, P.E.
DATE: 08-18-08

U.S.ARMY ENGINEER DISTRICT
CORPS OF ENGINEERS
CHICAGO, ILLINOIS

DES PLAINES RIVER, ILLINOIS
LOCAL FLOOD PROTECTION
FLOODWALL 37
RIVER RD/MILWAUKEE AVE.
SURVEY OF EXISTING
UTILITIES STA. 202+00 TO 221+00

SHEET REFERENCE NUMBER:
C-04

SHEET 09 OF 131

PLOT DATE: 8/18/2008
FILENAME: levee37-pnt024.dgn

US Army Corps of Engineers
Chicago District

SYMBOL	AMENDMENT DESCRIPTION	DATE APPROVED	SYMBOL	DESCRIPTION	DATE APPROVED

DESIGNED BY: GA
DATE: 08-18-2008
DRAWN BY: GA
SCALE: AS SHOWN
CHECKED BY: JT
SOLICITATION NUMBER: W912P6-08-B-0003
SUBMITTED BY: JOHN GROBOSKI, P.E.
DATE: 08-18-08

U.S.ARMY ENGINEER DISTRICT
CORPS OF ENGINEERS
CHICAGO, ILLINOIS

DES PLAINES RIVER, ILLINOIS
LOCAL FLOOD PROTECTION
FLOODWALL 37
RIVER RD/MILWAUKEE AVE.
SURVEY OF EXISTING
UTILITIES STA. 221+00 TO 241+00

SHEET REFERENCE NUMBER:
C-05
SHEET 10 OF 131

PLOT DATE: 8/18/2008
FILENAME: levee37-sht005.dgn

US Army Corps of Engineers
Chicago District

SYMBOL	AMENDMENT DESCRIPTION	DATE APPROVED	SYMBOL	DESCRIPTION	DATE APPROVED

DESIGNED BY: GA
DATE: 08-18-2008
DRAWN BY: GA
SCALE: AS SHOWN
CHECKED BY: JT
SOLICITATION NUMBER: W912P6-08-B-0003
SUBMITTED BY: JOHN GROBOSKI, P.E.
DATE:

U.S. ARMY ENGINEER DISTRICT
CORPS OF ENGINEERS
CHICAGO, ILLINOIS

DES PLAINES RIVER, ILLINOIS
LOCAL FLOOD PROTECTION
FLOODWALL 37
RIVER RD/MILWAUKEE AVE.
SURVEY OF EXISTING
ULTILITIES STA. 241+00 TO 273+80

SHEET REFERENCE NUMBER:
C-06
SHEET 11 OF 131

PLOT DATE: 8/18/2008
FILENAME: lkwa37-sht06.dgn

US Army Corps of Engineers
Chicago District

SYMBOL	AMENDMENT DESCRIPTION	DATE APPROVED	SYMBOL	DESCRIPTION	DATE APPROVED

DESIGNED BY: GA
DATE: 08-18-2008
DRAWN BY: GA
SCALE: AS SHOWN
CHECKED BY: JT
SOLICITATION NUMBER: W912P6-08-B-0003
JOHN GROBOSKI, P.E.
SUBMITTED BY:
DATE: 08-18-08

U.S. ARMY ENGINEER DISTRICT
CORPS OF ENGINEERS
CHICAGO, ILLINOIS

DES PLAINES RIVER, ILLINOIS
LOCAL FLOOD PROTECTION
FLOODWALL 37
RIVER RD/MILWAUKEE AVE.
SURVEY OF EXISTING
UTILITIES STA. 273+80 TO 291+29

SHEET REFERENCE NUMBER:
C-07
SHEET 12 OF 131

PLOT DATE: 8/18/2008
FILENAME: levee37-sht007.dgn

STORM SEWER TAGS

Tag	Item	Pipe
ST 1	STORM CATCH BASIN	
	RIM = 643.29	
	INV S = 640.22	12" RCP
ST 2	STORM CATCH BASIN	
	RIM = 643.34	
	INV E = 639.68	12" RCP
ST 3	STORM MANHOLE	
	RIM = 643.08	
	INV E = 629.86	4'+ TUNNEL
	INV W = 629.86	4'+ TUNNEL
ST 4	STORM INLET	
	FLOWLINE = 642.16	
	INV E = 638.06	15" RCP
ST 5	STORM INLET	
	FLOWLINE = 642.15	
	INV S = 637.65	12" RCP
ST 6	STORM INLET	
	FLOWLINE = 641.98	
	INV W = 638.04	12" RCP
	INV NNE = 637.84	12" RCP
ST 7	STORM INLET	
	FLOWLINE = 642.04	
	INV E = 638.06	12" RCP
ST 8	STORM MANHOLE	
	RIM = 642.36	
	INV N = 632.86	15" RCP
	INV S = 632.86	15" RCP
	INV SSW = 637.51	12" RCP
ST 9	STORM INLET	
	FLOWLINE = 641.67	
	INV E = 637.79	12" PVC
ST 10	STORM INLET	
	FLOWLINE = 641.61	
	INV S = 638.07	12" PVC
ST 11	STORM MANHOLE	
	RIM = 642.13	
	INV N = 633.33	15" RCP
	INV S = 633.43	15" RCP
ST 12	STORM MANHOLE	
	RIM = 641.48	
	INV NE = 636.91	12" RCP
	INV W = 636.88	12" RCP
ST 13	STORM CATCH BASIN	
	RIM = 640.96	
	INV NNE = 636.96	10" RCP
	INV SW = 636.90	12" RCP
ST 14	STORM CATCH BASIN	
	RIM = 640.87	
	INV S = 637.73	10" RCP
ST 15	STORM CATCH BASIN	
	RIM = 640.04	
	INV W = 637.69	12" RCP
ST 16	STORM INLET	
	FLOWLINE = 640.94	
	INV S = 637.97	12" RCP
ST 17	STORM MANHOLE	
	RIM = 641.30	
	INV S = 633.59	15" RCP
	INV N = 633.58	12" RCP
ST 18	STORM INLET	
	FLOWLINE = 640.40	
	INV E = 636.11	12" RCP
	INV W = 636.82	12" RCP
ST 19	STORM INLET	
	FLOWLINE = 640.47	
	INV N = 637.24	12" RCP
ST 20	STORM MANHOLE	
	RIM = 640.90	
	INV W = 633.92	12" RCP
	INV S = 634.05	12" RCP
	INV N = 634.18	12" RCP
ST 21	STORM CATCH BASIN	
	RIM = 640.30	
	INV NE = 635.40	12" RCP
ST 22	STORM MANHOLE	
	RIM = 640.43	
	INV W = 634.48	12" RCP
	INV S = 634.68	12" RCP
ST 23	STORM MANHOLE	
	RIM = 640.00	
	INV SE = 635.71	12" RCP
	INV W = 635.85	12" RCP
ST 24	STORM INLET	
	FLOWLINE = 639.73	
	INV E = 635.53	12" RCP
ST 25	STORM INLET	
	FLOWLINE = 639.80	
	INV S = 636.85	12" RCP
ST 26	STORM INLET	
	FLOWLINE = 639.49	
	INV E = 636.77	12" PVC
ST 27	STORM MANHOLE	
	RIM = 639.86	
	INV W = 635.72	12" RCP
	INV N = 635.66	24" RCP
ST 28	STORM INLET	
	FLOWLINE = 639.53	
	INV W = 636.16	12" PVC
	INV E = 636.07	12" RCP
ST 29	STORM CATCH BASIN	
	RIM = 636.27	
ST 30	STORM CATCH BASIN	
	RIM = 636.39	
ST 31	STORM INLET	
	FLOWLINE = 638.67	
	INV N = 634.97	10" RCP
	INV SE = 634.94	12" RCP
ST 32	STORM MANHOLE	
	RIM = 637.13	
ST 33	10" FLARED END SECTION	
	INV = 630.38	
ST 34	STORM CATCH BASIN	
	RIM = 638.65	
	INV S = 635.26	10" RCP
ST 35	STORM CATCH BASIN	
	RIM = 635.86	
ST 36	STORM CATCH BASIN	
	RIM = 635.83	
ST 37	60" FLARED END SECTION	
	INV =626.85	
ST 38	STORM MANHOLE	
	RIM = 637.83	
	INV W = 634.33	12" RCP
	INV S = 632.13	24" RCP
	INV N = 632.18	12" RCP
ST 39	12" FLARED END SECTION	
	INV = 636.76	
ST 40	STORM INLET	
	FLOWLINE = 638.57	
	INV W = 634.18	12" PVC
	INV E = 634.11	12" RCP
ST 41	STORM INLET	
	FLOWLINE = 638.56	
	INV E = 634.81	12" PVC
ST 42	12" FLARED END SECTION	
	INV = 636.42	
ST 43	STORM MANHOLE	
	RIM = 638.60	
	INV E = 627.50	60" RCP
	INV N = 627.50	60" RCP
	INV S = --	12" RCP
ST 44	STORM MANHOLE	
	RIM = 637.00	
	INV S = 632.60	15" RCP
	INV NNE = 632.80	12" PVC
	INV E = 627.40	60" RCP
	INV S = 627.33	36" RCP
ST 45	STORM MANHOLE	
	RIM = 637.87	
	INV S = 627.32	60" RCP
	INV W = 627.32	60" RCP
ST 46	STORM INLET	
	FLOWLINE = 637.76	
	INV W = 633.33	12" PVC
	INV N = 633.76	12" RCP
ST 47	STORM CATCH BASIN	
	RIM = 635.92	
	INV S = 634.04	12" PVC
ST 48	STORM INLET	
	FLOWLINE = 637.75	
	INV E = 634.28	12" PVC
ST 49	STORM MANHOLE	
	RIM = 637.83	
	INV W = 630.58	12" RCP
	INV W = 632.23	15" RCP
	INV N = 630.83	12" RCP
	INV E = 630.03	15" RCP
ST 50	STORM CATCH BASIN	
	RIM = 633.23	
	INV SW = 630.17	12" RCP
	INV W = 629.32	15" RCP
	INV E = --	15" RCP
ST 51	STORM MANHOLE	
	RIM = 632.46	
ST 52	STORM MANHOLE	
	RIM = 633.20	
ST 53	STORM MANHOLE	
	RIM = 636.78	
	INV S = 631.13	12" RCP
	INV NNW = 632.78	12" RCP
	INV N = 631.18	36" RCP
ST 54	STORM INLET	
	FLOWLINE = 637.35	
	INV W = 633.30	12" PVC
	INV ESE = 633.10	12" RCP
ST 55	STORM INLET	
	FLOWLINE = 637.22	
	INV E = 633.55	12" PVC
ST 56	STORM CATCH BASIN	
	RIM = 637.16	
	INV NE = 634.39	12" RCP
ST 57	STORM MANHOLE	
	RIM = 637.64	
	INV NW = 634.39	12" RCP
	INV SW = 634.24	12" RCP
	INV N = 630.39	15" PVC
	INV W = 627.84	
	INV S = 627.54	
ST 58	STORM CATCH BASIN	
	RIM = 637.15	
	INV SE = 634.38	12" RCP
ST 59	STORM CATCH BASIN	
	RIM = 636.73	
	INV NE = 634.81	8" RCP
ST 60	STORM MANHOLE	
	RIM = 637.25	
	INV SW = 634.70	8" RCP
	INV NW = 634.75	8" RCP
	INV N = 630.50	15" RCP
	INV E = 628.30	60" TUNNEL
	INV W = 628.45	60" TUNNEL
ST 61	STORM CATCH BASIN	
	RIM = 636.62	
	INV S = 632.22	15" RCP
	INV N = 632.28	15" RCP
ST 62	STORM MANHOLE	
	RIM = 637.50	
	INV N = 633.60	18" RCP
	INV S = 633.40	15" PVC
ST 63	18" FLARED END SECTION	
	INV = 637.16	
ST 64	STORM MANHOLE	
	RIM = 637.30	
	INV N = 631.65	30" RCP
	INV S = 631.60	36" RCP
	INV WNW = 632.55	12" RCP
ST 65	STORM INLET	
	FLOWLINE = 637.28	
	INV W = 632.98	12" PVC
	INV SE = 632.78	12" RCP
ST 66	STORM INLET	
	FLOWLINE = 637.30	
	INV E = 632.36	12" PVC
ST 67	STORM MANHOLE	
	RIM = 637.67	
	INV W = 633.07	12" RCP
	INV N = 632.67	24" RCP
	INV S = 632.57	30" RCP
ST 68	STORM INLET	
	FLOWLINE = 637.39	
	INV E = 632.99	12" PVC
ST 69	STORM INLET	
	FLOWLINE = 637.36	
	INV W = 633.60	12" PVC
	INV E = 633.53	12" RCP
ST 70	STORM CATCH BASIN	
	RIM = 637.27	
	INV SW = 635.57	12" RCP
ST 71	STORM MANHOLE	
	RIM = 637.91	
	INV S = 633.13	24" RCP
	INV N = 633.13	18" RCP
	INV W = 633.23	12" RCP
ST 72	STORM INLET	
	FLOWLINE = 637.52	
	INV ESE = 633.46	12" RCP
	INV W = 633.77	12" PVC
ST 73	STORM INLET	
	FLOWLINE = 637.47	
	INV E = 634.22	12" PVC
ST 74	STORM MANHOLE	
	RIM = 637.73	
	INV S = 633.63	18" RCP
	INV WNW = 633.66	12" RCP
ST 75	18" FLARED END SECTION	
	INV = 635.37	
ST 76	STORM INLET	
	FLOWLINE = 637.65	
	INV SE = 634.17	12" RCP
	INV W = 634.24	12" PVC
ST 77	STORM INLET	
	FLOWLINE = 637.57	
	INV E = 634.49	12" PVC
ST 78	STORM CATCH BASIN	
	RIM = 637.83	
	INV W = 633.68	24" RCP
	INV E = --	15" RCP
	INV N = --	12" RCP
ST 79	15" FLARED END SECTION	
	INV = 635.29	
ST 80	STORM CATCH BASIN	
	RIM = 637.81	
	INV WNW = 635.13	12" RCP
	INV E = 634.10	18" RCP
	INV S = 634.77	15" RCP
	INV N = 634.08	15" CMP
ST 81	STORM CATCH BASIN	
	RIM = 637.54	
	INV ESE = 635.41	8" STEEL
ST 82	STORM CATCH BASIN	
	RIM = 637.41	
	INV N = 634.91	12" PVC
ST 83	STORM CATCH BASIN	
	RIM = 637.11	
	INV N = 634.66	12" PVC
	INV S = 634.56	12" PVC
ST 84	STORM CATCH BASIN	
	RIM = 637.25	
	INV S = --	
	INV NE = --	
ST 85	STORM INLET	
	FLOWLINE = 637.21	
	INV NW = 633.29	12" RCP
ST 86	STORM INLET	
	FLOWLINE = 637.24	
	INV ENE = 633.83	12" RCP
ST 87	STORM CATCH BASIN	
	RIM = 637.87	
	INV N = 632.64	15" RCP
	INV SE = 633.28	12" RCP
	INV E = 632.46	18" STEEL
	INV SSW = 633.80	12" PVC
ST 88	STORM MANHOLE	
	RIM = 637.44	
	INV N = 631.91	18" RCP
	INV S = 632.14	12" RCP
	INV W = 632.69	12" RCP
	INV W = 632.19	18" STEEL
ST 89	STORM MANHOLE	
	RIM = 637.79	
	INV N = 633.34	12" RCP
	INV W = 632.67	12" RCP
	INV S = 632.61	15" RCP
ST 90	STORM CATCH BASIN	
	RIM = 637.68	
	INV E = 635.43	12" RCP
	INV W = 635.38	12" RCP
ST 91	STORM INLET	
	FLOWLINE = 637.89	
	INV S = 634.09	12" RCP
ST 92	STORM MANHOLE	
	RIM = 637.73	
	INV N = 633.63	12" RCP
	INV E = 633.48	18" PVC
ST 93	STORM INLET	
	FLOWLINE = 637.24	
	INV S = 633.74	12" RCP
	INV W = 633.74	12" RCP
ST 94	STORM INLET	
	FLOWLINE = 636.99	
	INV E = 633.74	12" PVC
ST 95	STORM INLET	
	FLOWLINE = 637.00	
	INV NE = 632.60	12" RCP
	INV W = 632.80	12" PVC
ST 96	STORM MANHOLE	
	RIM = 637.49	
	INV N = 631.46	18" RCP
	INV S = 631.46	18" RCP
	INV SW = 631.59	12" RCP
ST 97	STORM CATCH BASIN	
	RIM = 637.13	
	INV W = 634.73	8" PVC
ST 98	STORM INLET	
	FLOWLINE = 636.84	
	INV E = 633.69	12" PVC
ST 99	STORM INLET	
	FLOWLINE = 636.93	
	INV NE = 632.83	12" RCP
	INV W = 632.83	12" PVC
ST 100	STORM MANHOLE	
	RIM = 637.17	
	INV SW = 632.67	12" RCP
	INV N = 630.52	21" RCP
	INV S = 630.62	18" RCP
ST 101	STORM MANHOLE	
	RIM = 636.63	
	INV N = 634.88	8" PVC
	INV SW = 634.98	4" PVC
ST 102	12" FLARED END SECTION	
	INV = 635.21	
ST 103	STORM CATCH BASIN	
	RIM = 637.31	
	INV W = 634.94	8" PVC
	INV E = 634.84	8" PVC
ST 104	STORM MANHOLE	
	RIM = 637.50	
	INV S = 634.90	8" PVC
	INV W = 634.85	8" PVC
	INV NE = 634.90	12" RCP
ST 105	12" FLARED END SECTION	
	INV = 635.07	
ST 106	12" FLARED END SECTION	
	INV = 634.93	
ST 107	15" FLARED END SECTION	
	INV = 634.78	
ST 108	15" FLARED END SECTION	
	INV = 634.70	
ST 109	15" FLARED END SECTION	
	INV = 634.75	
ST 110	15" FLARED END SECTION	
	INV = 634.45	
ST 111	STORM INLET	
	FLOWLINE = 637.10	
	INV NE = 633.10	12" RCP
	INV W = 633.25	12" PVC
ST 112	STORM INLET	
	FLOWLINE = 636.95	
	INV E = 633.80	12" PVC
ST 113	STORM MANHOLE	
	RIM = 636.94	
	INV N = 629.97	30" RCP
	INV S = 630.05	21" RCP
	INV SW = --	12" RCP
ST 114	STORM INLET	
	FLOWLINE = 636.99	
	INV E = 632.74	
ST 115	STORM INLET	
	FLOWLINE = 637.10	
	INV NE = 633.90	12" RCP
	INV W = 633.95	12" PVC
ST 116	STORM MANHOLE	
	RIM = 637.43	
	INV N = 629.59	30" RCP
	INV S = 629.66	30" RCP
	INV SW = --	12" RCP
ST 117	STORM CATCH BASIN	
	RIM = 635.45	
	INV NW = 632.80	18" RCP
ST 118	STORM CATCH BASIN	
	RIM = 636.27	
	INV E = 633.09	12" RCP
	INV N = 633.47	12" RCP
ST 119	STORM MANHOLE	
	RIM = 636.60	
	INV SE = 630.70	18' RCP
	INV NW = 630.70	18" RCP
	INV W = 631.80	12" RCP
ST 120	STORM MANHOLE	
	RIM = 636.74	
	INV SE = 630.44	18" RCP
	INV N = 628.36	48" RCP
	INV W = 628.36	48" RCP
ST 121	STORM CATCH BASIN	
	RIM = 636.30	
	INV S = 634.60	12" RCP
ST 122	STORM INLET	
	FLOWLINE = 636.91	
	INV W = 632.91	12" PVC
	INV NE = 632.81	12" RCP
ST 123	STORM INLET	
	FLOWLINE = 636.95	
	INV E = 631.85	12" PVC
ST 124	STORM CATCH BASIN	
	RIM = 636.29	
	INV NW = 633.44	
ST 125	STORM MANHOLE	
	RIM = 637.41	
	INV N = 629.39	30" RCP
	INV S = 629.44	30" RCP
	INV SW = --	12" RCP
	INV SE = 633.03	12" RCP
ST 126	STORM INLET	
	FLOWLINE = 636.40	
	INV W = 632.60	12" PVC
	INV NE = 632.50	12" RCP
ST 127	STORM INLET	
	FLOWLINE = 636.41	
	INV E = 633.16	12" PVC
ST 128	STORM CATCH BASIN	
	RIM = 636.19	
	INV SW = 631.39	12" RCP
	INV N = 628.64	30" RCP
	INV S = 628.74	30" RCP
ST 129	STORM CATCH BASIN	
	RIM = 635.00	
	INV W = 631.90	18" RCP
ST 130	STORM INLET	
	FLOWLINE = 635.75	
	INV W = 631.80	12" PVC
	INV NE = 631.75	12" RCP
ST 131	STORM INLET	
	FLOWLINE = 635.76	
	INV E = 632.56	12" PVC
ST 132	STORM CATCH BASIN	
	RIM = 636.06	
	INV SW = 631.84	12" RCP
	INV N = 628.26	30"RCP
	INV S = 628.26	30" RCP
ST 133	STORM INLET	
	FLOWLINE = 635.15	
	INV W = 630.68	12" PVC
	INV NE =630.68	12" RCP
ST 134	STORM INLET	
	FLOWLINE = 635.12	
	INV E = --	12" PVC
ST 135	STORM CATCH BASIN	
	RIM = 635.11	
	INV SW = --	12" RCP
	INV NE = 628.26	18" RCP
	INV S = 628.09	30" RCP
	INV SE = 627.96	18" RCP
ST 136	STORM GRATE	
	RIM = 632.93	
	INV N = 628.93	36" RCP
	INV E = 627.90	48"+ RCP
	INV SW = 627.90	48" RCP
ST 137	36" FLARED END SECTION	
	INV = 630.03	
ST 138	60" FLARED END SECTION	
	INV = 625.67	
ST 139	STORM INLET	
	INV NE = 631.79	12" RCP
ST 140	STORM CATCH BASIN	
	RIM = 634.29	
	INV S = 629.99	12" PVC
	INV SW = 626.69	12" PVC
	INV SE = 626.59	12" PVC
ST 141	STORM MANHOLE	
	RIM = 635.26	
ST 142	STORM CATCH BASIN	
	RIM = 634.13	
	INV N = 626.98	18" RCP
	INV SE = 626.63	30" RCP
ST 143	12" FLARED END SECTION	
	INV = 630.99	

US Army Corps of Engineers Chicago District

SYMBOL	DESCRIPTION	DATE	APPROVED

SYMBOL	AMENDMENT DESCRIPTION	DATE	APPROVED

DESIGNED BY: GA | DATE: 08-18-2008
DRAWN BY: GA | SCALE: AS SHOWN
CHECKED BY: JT | SOLICITATION NUMBER: W912P6-08-B-0003
SUBMITTED BY: JOHN GROBOSKI, P.E. | DATE: 08-18-08

U.S.ARMY ENGINEER DISTRICT
CORPS OF ENGINEERS
CHICAGO, ILLINOIS

DES PLAINES RIVER, ILLINOIS
LOCAL FLOOD PROTECTION
FLOODWALL 37
RIVER RD/MILWAUKEE AVE.

UTILITY TAG INFORMATION
ST 1 TO ST 143

SHEET REFERENCE NUMBER:
C-08

SHEET 13 OF 131

PLOT DATE: 8/18/2008
FILENAME: levee37-shC08.dgn

STORM SEWER TAGS

ST 144 STORM INLET
FLOWLINE = 634.43
INV NE = 630.88 12" RCP

ST 145 STORM MANHOLE
RIM = 634.91
INV N = 627.41 15" RCP
INV S = 627.01 18" RCP
INV NW = 630.36 12" RCP
INV SW = -- 12" RCP
INV NE = 629.11 12" PVC

ST 146 STORM INLET
FLOWLINE = 634.45
INV SE = 631.35 12" RCP

ST 147 STORM CATCH BASIN
RIM = 631.95
INV SW = 629.80 12" PVC

ST 148 STORM MANHOLE
RIM = 633.16
INV N = 626.46 BOX STRUCTURE
INV SE = 626.46 BOX STRUCTURE
INV SW = 627.06 12" RCP

ST 149 STORM MANHOLE
RIM =633.25
INV NNE = -- 24" RCP
INV S= --

ST 150 24" FLARED END SECTION
INV = 632.13

ST 151 STORM INLET
FLOWLINE = 634.52
INV NE = 631.12 12" RCP

ST 152 STORM MANHOLE
RIM = 635.10
INV N = 629.00 15" RCP
INV S = 629.35 15" RCP
INV NW = 630.30 12" RCP
INV SW = 630.16 12" RCP

ST 153 STORM INLET
FLOWLINE = 634.54
INV SE = 631.24 12" RCP

ST 154 12" FLARED END SECTION
INV = 633.64

ST 155 STORM INLET
FLOWLINE = 634.59
INV NE = 631.49 12" RCP

ST 156 STORM MANHOLE
RIM = 635.07
INV N = 630.97 12" RCP
INV S = 630.67 15" RCP
INV NW = 630.97 12" RCP
INV SW = 631.07 12" RCP

ST 157 STORM INLET
FLOWLINE = 634.63
INV SE = 631.58 12" RCP

ST 158 STORM CATCH BASIN
RIM = 634.24
INV N = 630.94 10" RCP

ST 159 STORM INLET
FLOWLINE = 634.69
INV E = 631.94 12" RCP

ST 160 STORM MANHOLE
RIM = 635.24
INV N = 631.94 12" RCP
INV W = 631.94 12" RCP
INV SW = 631 94 12" RCP

ST 161 STORM INLET
FLOWLINE = 634.75
INV S = 632.10 12" RCP

ST 162 STORM MANHOLE
RIM = 634.72

ST 163 STORM CATCH BASIN
RIM = 634.37
INV N = 631.55 10" RCP

ST 164 STORM CATCH BASIN
RIM = 634.23
INV E = 631.40 10" RCP
INV N = 631.36 12" RCP

ST 165 STORM INLET
FLOWLINE = 635.13
INV W = 631.66 12" RCP
INV NE = 632.33 12" RCP

ST 166 STORM INLET
FLOWLINE = 636.19
INV NW = 632.56 12' RCP

ST 167 STORM INLET
FLOWLINE = 635.48
INV SE = 632.53 12" RCP
INV NW = 632.73 12" RCP

ST 168 STORM CATCH BASIN
RIM = 635.17
INV N = 631.98 18" RCP
INV S = 632.57 12" RCP
INV E = 632.67 12" RCP

ST 169 STORM CATCH BASIN
RIM = 634.35
INV NW = 631.55 10" RCP

ST 170 STORM MANHOLE
RIM = 635.24
INV SW = 630.56 18" RCP
INV NE = 631.01 15" RCP
INV SE = 631.08 10" RCP

ST 171 STORM MANHOLE
RIM = 635.84
INV NE = 631.49 18" RCP
INV SW = 631.69 18" RCP
INV NE = 631.99 12" RCP

ST 172 STORM INLET
FLOWLINE = 635.79
INV SW = 632.25 12" RCP
INV SE = 632.21 12" RCP

ST 173 STORM INLET
FLOWLINE = 637.13
INV NW = 633.41 12" RCP

ST 174 STORM CATCH BASIN
RIM = 634.48
INV SE = 631.22 10" RCP

ST 175 STORM MANHOLE
RIM = 635.62
INV N = 629.76 12" RCP
INV S = 629.63 12" RCP
INV NW = 629.22 10" RCP

ST 176 STORM CATCH BASIN
RIM = 634.91
INV SE = 630.82 10" RCP

ST 177 STORM MANHOLE
RIM = 635.78
INV N = 630.06 24" RCP
INV SW = 630.12 18" RCP

ST 178 STORM INLET
FLOWLINE = 635.88
INV E = 632.78 12" RCP
INV W = 632.48 12" RCP

ST 179 STORM INLET
FLOWLINE = 636.86
INV W = 633.93 12" RCP

ST 180 STORM CATCH BASIN
RIM = 634.60
INV N = 631.60 8" RCP

ST 181 STORM CATCH BASIN
RIM = 634.72
INV W = 633.47 4"
INV E = 631.70 12" RCP

ST 182 STORM CATCH BASIN
RIM = 634.52
INV W = 631.62 10" RCP
INV S = 631.52 8" RCP

ST 183 STORM MANHOLE
RIM = 635.22
INV E = 630.92 10" RCP
INV W = 630.92 10" RCP
INV S = 629.67 12" RCP
INV N = 629.98 12" RCP

ST 184 STORM MANHOLE
RIM = 636.19
INV NW = 632.29 12" RCP
INV W = 631.64 12" RCP

ST 185 STORM CATCH BASIN
RIM = 635.18
INV SE = 633.40 12" RCP

ST 186 STORM CATCH BASIN
RIM = 634.80
INV SE = 631.73 12" RCP

ST 187 STORM MANHOLE
RIM = 635.48
INV N = 631.07 10" RCP
INV E = 630.93 12" RCP
INV SW = 631.08 10" RCP

ST 188 STORM INLET
FLOWLINE = 635.00
INV NW = 631.20 12" RCP

ST 189 STORM CATCH BASIN
RIM = 635.07
INV NE = 631.84 12" RCP

ST 190 STORM MANHOLE
RIM = 635.73
INV N = 628.93 24" RCP
INV S = 629.28 24" RCP
INV SE = 631.33 12" RCP
INV E = 631.33 12" RCP

ST 191 STORM INLET
FLOWLINE = 636.18
INV W = 632.91 12" RCP

ST 192 STORM CATCH BASIN
RIM = 636.17
INV E = 632.52 12" RCP
INV W = 632.05 12" RCP

ST 193 STORM MANHOLE
RIM = 635.43
INV NE = 630.47 12" RCP
INV W = 630.38 12" RCP
INV WSW = 630.13 12" RCP
INV S = 629.93 12" RCP

ST 194 STORM CATCH BASIN
RIM = 634.65
INV W = 631.95 10" RCP
INV S = 631.78 10" RCP

ST 195 STORM CATCH BASIN
RIM = 634.88
INV SW = 631.88 12" RCP

ST 196 STORM CATCH BASIN
RIM = 635.41
INV NW = 631.51 12" RCP

ST 197 STORM INLET
FLOWLINE = 636.34
INV W = 633.16 12" RCP

ST 198 STORM INLET
FLOWLINE = 635.46
INV SE = 631.76 12" RCP
INV W = 631.61 12" RCP

ST 199 STORM CATCH BASIN
RIM = 635.83
INV E = 632.56 12" RCP

ST 200 STORM INLET
FLOWLINE = 636.42
INV W = 631.34 12" RCP

ST 201 STORM INLET
FLOWLINE = 636.39
INV NE = 632.42 12" RCP

ST 202 STORM MANHOLE
RIM = 636.89
INV N = 629.33 30" RCP
INV S = 629.64 24" RCP
INV NE = 631.37 12" RCP
INV E = 630.32 12" RCP

ST 203 STORM INLET
FLOWLINE = 636.26
INV S = 631.67 12" RCP

ST 204 STORM INLET
FLOWLINE = 636.21
INV NE = 632.24 12" RCP

ST 205 12" FLARED END SECTION
INV = 631.29

ST 206 12" FLARED END SECTION
INV = 628.39

ST 207 STORM CATCH BASIN
RIM = 636.88
INV NNE = 632.00 12" RCP

ST 208 STORM MANHOLE
RIM = 637.65
INV E = 629.22 30" RCP
INV S = 629.42 30" RCP
INV W = 629.90 4" PVC
INV N = 630.65 12" RCP

ST 209 STORM CATCH BASIN
RIM = 634.29
INV NW = 631.13 12" RCP
INV E = 630.73 4" PVC

ST 210 STORM INLET
FLOWLINE = 637.06
INV S = 631.84 12" RCP

ST 211 STORM CATCH BASIN
RIM = 636.90
INV W = 632.91 12" RCP
INV SE = 633.03 12" RCP

ST 212 STORM INLET
FLOWLINE = 637.25
INV WNW = 631.58 12" RCP
INV ENE = 631.50 24" RCP

ST 213 24" FLARED END SECTION
INV = 629.52

ST 214 STORM CATCH BASIN
RIM = 636.95
INV E = 633.84 12" RCP

ST 215 STORM CATCH BASIN
RIM = 637.97
INV WNW = 632.27 12" RCP
INV ESE = 632.32 12" RCP

ST 216 STORM INLET
FLOWLINE = 637.42
INV E = 632.54 12" RCP

ST 217 STORM INLET
FLOWLINE = 637.66
INV N = 631.24 12" RCP

ST 218 36" FLARED END SECTION
INV = 630.50

ST 219 STORM CATCH BASIN
RIM = 637.81
INV NW = 631.21 36" RCP
INV E = 631.16 36" RCP
INV S = 631.51 12" RCP
INV SW = 631.91 12" RCP

ST 220 STORM INLET
FLOWLINE = 637.70
INV NW = 634.55 12" RCP
INV NE = 633.45 12" RCP

ST 221 STORM CATCH BASIN
RIM = 639.29
INV NW =635.14 12" RCP
INV SE = 636.29 12" RCP

ST 222 STORM INLET
FLOWLINE = 638.13
INV NE = 632.34 12" RCP
INV W = 632.39 12" RCP

ST 223 STORM INLET
FLOWLINE = 638.02
INV E = 633.67 12" RCP

ST 224 STORM CATCH BASIN
RIM = 638.91
INV SE = 635.41 12" RCP

ST 225 STORM INLET
FLOWLINE = 638.56
INV NE = 633.33 12" RCP
INV SW = 633.31 12" RCP

ST 226 STORM INLET
FLOWLINE = 638.49
INV E = 634.39 12" RCP

ST 227 STORM CATCH BASIN
RIM = 638.79
INV NW = 631.29 12" RCP
INV WNW = 631.19 18" RCP
INV W = 631.06 24" RCP
INV SE = 630.96 36" RCP

ST 228 STORM INLET
FLOWLINE = 638.80
INV NE = 635.70 12" RCP

ST 229 STORM INLET
FLOWLINE = 638.94
INV SE = 634.49 12" RCP

ST 230 STORM CATCH BASIN
RIM = 637.17
INV E = 634.32 24" RCP
INV SE = 634.57 12" RCP

ST 231 STORM MANHOLE
RIM = 640.08
INV NW = 632.53 18" RCP
INV SE = 632.02 18" RCP

ST 232 STORM CATCH BASIN
RIM = 636.73
INV NW = 633.73 12" RCP
INV S = 633.48 12" RCP

ST 233 18" FLARED END SECTION
INV = 636.28

ST 234 STORM INLET
FLOWLINE = 639.12
INV ENE = 635.27 12" RCP

ST 235 STORM INLET
FLOWLINE = 639.50
INV SW = 634.25 12" RCP

ST 236 18" CULVERT CMP
INV = 637.01

ST 237 18" CULVERT CMP
INV = 637.22

ST 238 STORM CATCH BASIN
RIM = 639.27
INV N = 635.97 12" RCP
INV ENE = 635.64 12" RCP

ST 239 STORM INLET
FLOWLINE = 639.14
INV S = 636.29 12" RCP

ST 240 STORM CATCH BASIN
RIM = 637.31
INV NE = 635.44 8" STEEL

ST 241 STORM CATCH BASIN
RIM = 637.36
INV SW = 635.36 8" STEEL
INV NW = 633.75 10" RCP

ST 242 STORM INLET
FLOWLINE = 640.32
INV SW = 635.17 12" RCP

ST 243 STORM CATCH BASIN
RIM = 640.81
INV NE = 634.01 12" RCP
INV NW = 633.86 12" RCP
INV SE = 633.76 18" RCP

ST 244 STORM INLET
FLOWLINE = 639.64
INV SE = 635.19 12" RCP
INV NW = 635.19 12" RCP

ST 245 36" FLARED END SECTION
INV = 626.01

ST 246 STORM INLET
FLOWLINE = 639.48
INV SE = 637.48 12" RCP

ST 247 STORM CATCH BASIN
RIM = 637.19
INV NE = 631.34 36" RCP
INV NW = 631.39 36" RCP
INV SSE = 632.14 10" RCP
INV NNW = 632.39 10" RCP

ST 248 STORM CATCH BASIN
RIM = 640.31
INV SW = 629.53 36" RCP
INV SE = 629.53 36" RCP

ST 249 STORM CATCH BASIN
RIM = 639.86
INV N = 636.18 12" RCP

ST 250 STORM INLET
FLOWLINE = 639.46
INV W = 637.66 10" RCP

ST 251 STORM CATCH BASIN
RIM = 639.63
INV E = 636.98 10" RCP
INV NE = 636.83 12" RCP

ST 252 STORM MANHOLE
RIM = 640.85
INV NW = 633.04 12" RCP
INV NE = 632.95 16" RCP
INV SW = 635.40 12" RCP
INV S = 635.40 10" RCP

ST 253 48" FLARED END SECTION
INV = 629.10

ST 254 STORM CATCH BASIN
RIM = 639.82
INV E = 637.67 10" RCP

ST 255 STORM INLET
FLOWLINE = 639.99
INV NE = 636.41

ST 256 STORM INLET
FLOWLINE = 639.93
INV SE = 636.28 12" RCP

ST 257 STORM INLET
FLOWLINE = 640.55
INV SW = 636.50 12" RCP
INV NW = --

ST 258 STORM INLET
FLOWLINE = 639.84
INV SW = 635.29 12" RCP
INV NW = -- 12" RCP

ST 259 STORM CATCH BASIN
RIM = 637.08
INV W = 634.68 12" RCP

ST 260 STORM INLET
FLOWLINE = 640.61
INV SE = -- 12" RCP

ST 261 STORM CATCH BASIN
RIM = 639.89
INV SE = 635.84

ST 262 STORM INLET
FLOWLINE = 639.61
INV N = 636.16 10" RCP

ST 263 STORM INLET
FLOWLINE = 639.71
INV E = 634.75 12" RCP
INV S = 634.91 10" RCP

ST 264 STORM INLET
FLOWLINE = 639.91
INV N = 638.01 12" RCP

ST 265 STORM INLET
FLOWLINE = 639.83
INV E = 635.75 12" RCP
INV S = 636.58 12" RCP

ST 266 STORM MANHOLE
RIM = 650.10
INV E = 600.10
INV W = 600.10

ST 267 STORM INLET
FLOWLINE = 639.73
INV NE = 637.89 10" RCP

ST 268 STORM CATCH BASIN
RIM = 640.16
INV SE = 638.51 8" STEEL
INV SW = 635.75 10" RCP
INV NW = 634.64 15" RCP

ST 269 STORM CATCH BASIN
RIM = 639.70
INV NW = 637.70 12" RCP

ST 270 STORM CATCH BASIN
RIM = 639.88
INV N = 637.98 10" RCP

ST 271 STORM CATCH BASIN
RIM = 639.08
INV SSE = 637.98 8" STEEL
INV SE = 636.38 12" RCP
INV NW = 636.23 12" RCP

ST 272 STORM CATCH BASIN
RIM = 640.01
INV S = 636.66 10" RCP
INV NE = 634.81 12" RCP

ST 273 STORM MANHOLE
RIM = 640.23
INV NNW = 633.16 18" RCP
INV SW = 635.23 12" RCP
INV SE = 633.43 12" RCP

ST 274 STORM CATCH BASIN
RIM =639.78
INV W = 635.93 12" RCP
INV NW = 634.73 12" RCP

ST 275 STORM MANHOLE
RIM = 651.54

ST 276 STORM INLET
FLOWLINE = 638.95
INV E = 636.95 12" RCP

ST 277 STORM MANHOLE
RIM = 650.55

ST 278 STORM MANHOLE
RIM = 650.50

ST 279 STORM CATCH BASIN
RIM = 639.73
INV WSW = 634.03 12" RCP

ST 280 STORM MANHOLE
RIM = 640.13
INV N = 636.89 10" RCP

ST 281 STORM CATCH BASIN
RIM = 639.73
INV NW = 636.68 12" RCP

ST 282 STORM CATCH BASIN
RIM = 639.63
INV SW = 635.14

ST 283 STORM MANHOLE
RIM = 640.03
INV SE = 636.57 12" RCP
INV S = 636.32 10" RCP
INV W = 636.13 12" RCP
INV SE = 632.97 18" RCP
INV N = 632.53 18" RCP
INV E = 632.68 12" RCP

US Army Corps of Engineers
Chicago District

SYMBOL	AMENDMENT DESCRIPTION	DATE APPROVED	SYMBOL	DESCRIPTION	DATE APPROVED

DESIGNED BY: GA
DATE: 08-18-2008
DRAWN BY: GA
SCALE: AS SHOWN
CHECKED BY: JT
SOLICITATION NUMBER: W912P6-08-B-0003
SUBMITTED BY: JOHN GROBOSKI, P.E.
DATE: 08-18-08

U.S.ARMY ENGINEER DISTRICT
CORPS OF ENGINEERS
CHICAGO, ILLINOIS

DES PLAINES RIVER, ILLINOIS
LOCAL FLOOD PROTECTION
FLOODWALL 37
RIVER RD/MILWAUKEE AVE.

UTILITY TAG INFORMATION
ST 144 TO ST 283

SHEET REFERENCE NUMBER:
C-09

SHEET 14 OF 131

PLOT DATE: 8/18/2008
FILENAME: levee37-arlC09.dgn

STORM SEWER TAGS

```
ST 284  STORM CATCH BASIN
            RIM = 639.95
            INV NW = 638.37        8" PVC

ST 285  STORM MANHOLE
            RIM = 640.07
            INV SE = 637.07        8" PVC
            INV E = 636.32         12" RCP

ST 286  STORM CATCH BASIN
            RIM = 639.15
            INV NE = 635.13        12" RCP
            INV W = 635.15         12" RCP

ST 287  STORM MANHOLE
            RIM = 640.33
            INV SW = 632 78        12" RCP
            INV E = 628.13         60" RCP
            INV W = 628.13         60" RCP

ST 288  STORM INLET
            FLOWLINE = 639.42
            INV SE = 635.67        12" RCP
            INV NW = 635.87        12" RCP

ST 289  STORM CATCH BASIN
            RIM = 639.53
            INV SE = 637.88        12" RCP

ST 290  STORM INLET
            FLOWLINE = 639.92
            INV E = 637.92         12" RCP

ST 291  STORM CATCH BASIN
            RIM = 640.28
            INV NW = 636.42        12" RCP
            INV N = 635.72         12" RCP

ST 292  STORM CATCH BASIN
            RIM = 640.22
            INV N = 637.07         12" RCP

ST 293  STORM INLET
            FLOWLINE = 643.00
            INV W = 638.92         12" RCP

ST 294  STORM MANHOLE
            RIM = 640.49

ST 295  STORM CATCH BASIN
            RIM = 639.01
            INV S =635.29

ST 296  STORM MANHOLE
            RIM = 638.81

ST 297  STORM MANHOLE
            RIM = 638.91

ST 298  STORM INLET
            FLOWLINE = 638.61
            INV S = 634.31

ST 299  STORM INLET
            FLOWLINE = 639.18
            INV SW

ST 300  STORM INLET
            FLOWLINE = 639.36
            INV SW = 635.89

ST 301  STORM CATCH BASIN
            RIM = 636.04
            INV S = 632.94         24" RCP

ST 302  STORM INLET
            FLOWLINE = 639.58
            INV S = 635.38

ST 303  STORM INLET
            FLOWLINE = 639.94
            INV W = 635.84

ST 304  STORM MANHOLE
            RIM = 640.32
            INV W = 634.32
            INV E = 630.32
            INV E = 610 +/-
            INV W = 610 +/-

ST 305  STORM MANHOLE
            RIM = 640.96
            INV E = 616.01
            INV W = 616.01

ST 306  STORM INLET
            FLOWLINE = 640.32
            INV ESE = 636.24       12" RCP
```

SANITARY SEWER TAGS

```
SAN 1   SANITARY MANHOLE
            RIM = 643.20
            INV N = 637.39         8" STEEL
            INV W = 637.45         8" STEEL

SAN 2   SANITARY MANHOLE
            RIM = 641.51
            INV NW = 635.31        8" STEEL
            INV S = 636.61         8" STEEL

SAN 3   SANITARY MANHOLE
            RIM = 641.31
            INV SE = 634.01        8" STEEL
            INV W = 633.26         8" STEEL
            INV N = 633.37         8" STEEL

SAN 4   SANITARY MANHOLE
            RIM = 641.28
            INV N = 635.48         8" STEEL
            INV S = 634.83         8" STEEL

SAN 5   SANITARY MANHOLE
            RIM = 641.01
            INV W = 635.95         6" PVC
            INV S = 635.95         8" STEEL

SAN 6   SANITARY MANHOLE
            RIM = 640.76

SAN 7   SANITARY MANHOLE
            RIM = 639.40
            INV W = 631.87         6" STEEL

SAN 8   SANITARY MANHOLE
            RIM = 637.58
            INV W = 628.31         8" STEEL
            INV S = 631.58

SAN 9   SANITARY MANHOLE
            RIM = 637.40
            INV N = 626.05         10" STEEL
            INV E = 625.45         8" STEEL
            INV W = 625.32         10" STEEL

SAN 10  SANITARY MANHOLE
            RIM = 637.83
            INV W = 631.98         8" STEEL
            INV NE = 632.03        8" STEEL

SAN 11  SANITARY MANHOLE
            RIM = 638.88

SAN 12  SANITARY MANHOLE (FORCEMAIN)
            RIM = 636.68
            6" FM N
            6" FM W
            TOP OF PIPE = 630.16

SAN 13  SANITARY MANHOLE
            RIM = 634.67
            INV N = 628.47         8" PVC
            INV E = 627.39         8" PVC
            INV W = 627.44         8" PVC

SAN 14  SANITARY MANHOLE (FORCEMAIN)
            RIM = 636.12
            6" FM N
            6" FM S
            TOP OF PIPE = 628.97

SAN 15  SANITARY MANHOLE
            RIM = 635.00
            INV NE = 629.46        8" PVC
            INV W = 629.55         8" PVC

SAN 16  SANITARY MANHOLE
            RIM = 635.59
            INV N = 631.19         8" PVC
            INV S = 631.14         8" PVC

SAN 17  SANITARY MANHOLE (FORCEMAIN)
            RIM = 636.51
            6" FM NE
            6" FM SW
            6" FM E
            TOP OF PIPE = 628.51

SAN 18  SANITARY MANHOLE
            RIM = 635. 37
            INV NW = 632.53        8" TILE
            INV S = 631.85         8" TILE

SAN 19  SANITARY MANHOLE
            RIM = 639.99
            INV S = 635.94         4" PVC
            INV SW = 635.90        4" PVC
            INV NW = 635.81        8" STEEL

SAN 20  SANITARY MANHOLE
            RIM = 639.88
            INV SE = 635.29        8" STEEL
            INV SW = 635.23        8" STEEL

SAN 21  SANITARY MANHOLE
            RIM = 638.00

SAN 22  SANITARY MANHOLE
            RIM = 639.26

SAN 23  SANITARY MANHOLE
            RIM = 641.73
            INV SW = 636.51        8" STEEL
            INV E = 636.41         8" STEEL
```

WATER MAIN TAGS

```
WAT 1   VALVE VAULT
            RIM = 641.91
            20" LINE NORTH
            20" LINE SOUTH
            TOP OF PIPE = 637.11

WAT 2   VALVE VAULT
            RIM = 641.30
            8" LINE EAST
            8" LINE WEST
            TOP OF PIPE = 636.24

WAT 3   VALVE VAULT
            RIM = 639.98
            20" LINE NORTH
            20" LINE SOUTH
            TOP OF PIPE = 634.51

WAT 4   VALVE VAULT
            RIM = 639.54
            6" LINE EAST
            6" LINE WEST
            TOP OF PIPE = 633.94

WAT 5   VALVE VAULT
            RIM = 639.47
            20" LINE NORTH
            20" LINE SOUTH
            TOP OF PIPE = 634.55

WAT 6   VALVE VAULT
            RIM = 637.67
            8" LINE NORTWEST
            8" LINE SOUTHEAST
            TOP OF PIPE = 632.77

WAT 7   VALVE VAULT
            RIM = 638.37
            6" LINE NORTH
            6" LINE SOUTH
            TOP OF PIPE = 631.82

WAT 8   VALVE VAULT
            RIM = 637.85
            LINE EAST
            LINE WEST
            TOP OF PIPE = 632.85

WAT 9   VALVE VAULT
            RIM = 637.91
            12" LINE NORTHWEST
            12" LINE SOUTHEAST
            TOP OF PIPE = 631.61

WAT 10  VALVE VAULT
            RIM = 635.39
            8" LINE NORTHEAST
            8" LINE SOUTHWEST
            TIP OF PIPE = 629.09

WAT 11  VALVE VAULT
            RIM = 637.49
            8" LINE EAST
            8" LINE WEST
            10" LINE NORTH
            TOP OF PIPE = 633.23

WAT 12  VALVE VAULT
            RIM = 639.41

WAT 13  VALVE VAULT
            RIM = 640.45
```

US Army Corps of Engineers
Chicago District

SYMBOL	AMENDMENT DESCRIPTION	DATE APPROVED	SYMBOL	DESCRIPTION	DATE APPROVED

DESIGNED BY: GA | DATE: 08-18-2008
DRAWN BY: GA | SCALE: AS SHOWN
CHECKED BY: JT | SOLICITATION NUMBER: W912P6-08-B-0003
SUBMITTED BY: JOHN GROBOSKI, P.E. | DATE: 08-18-08

U.S.ARMY ENGINEER DISTRICT
CORPS OF ENGINEERS
CHICAGO, ILLINOIS

DES PLAINES RIVER, ILLINOIS
LOCAL FLOOD PROTECTION
FLOODWALL 37
RIVER RD/MILWAUKEE AVE.

UTILITY TAG INFORMATION
ST 284 TO ST 306, SAN 1 TO
SAN 23 AND WAT 1 TO WAT 13

SHEET REFERENCE NUMBER:
C-10

PLOT DATE: 8/18/2008
FILENAME: levee37-sht10.dgn

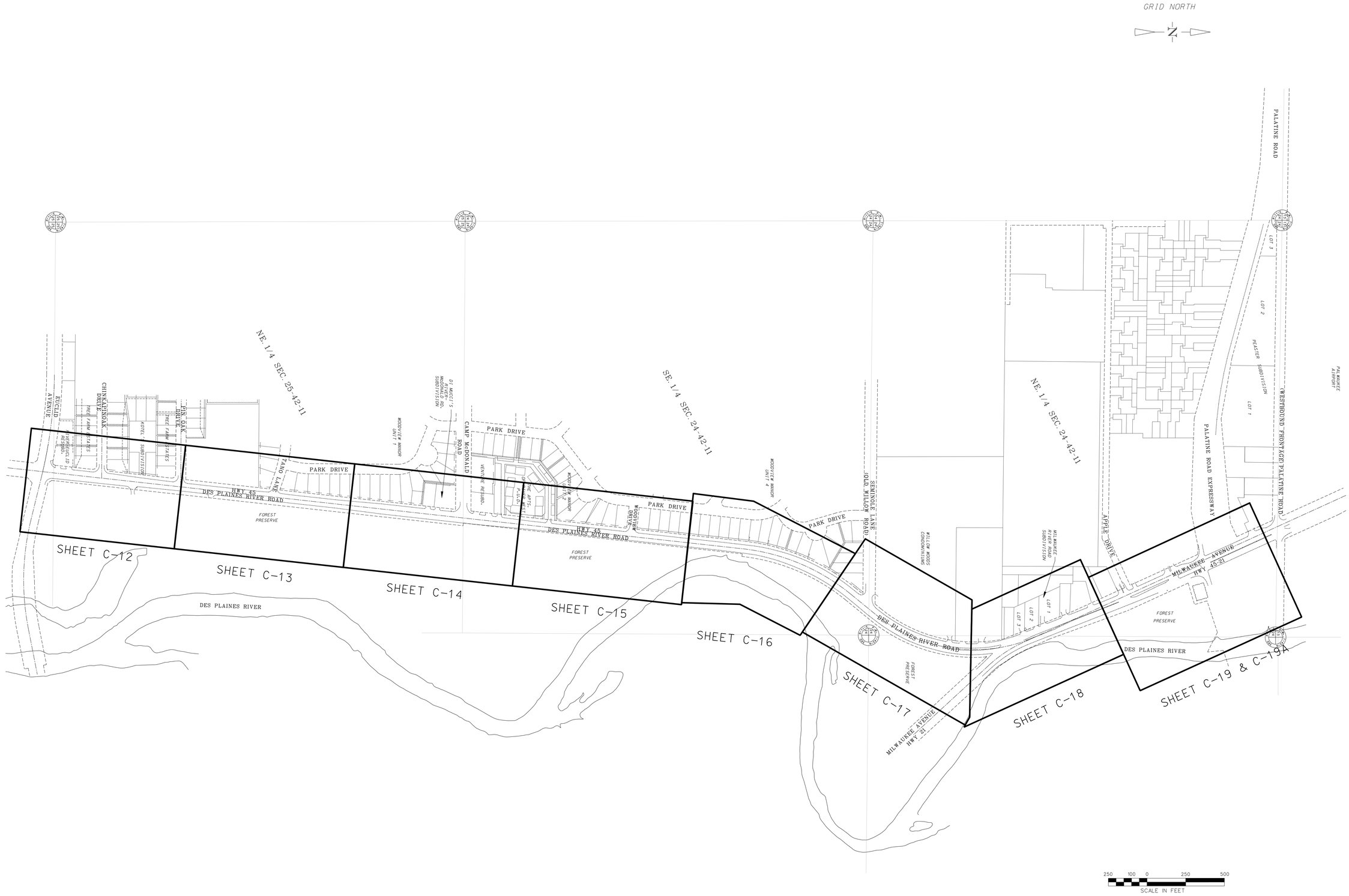

US Army Corps of Engineers
Chicago District

SYMBOL	AMENDMENT DESCRIPTION	DATE APPROVED	SYMBOL	DESCRIPTION	DATE APPROVED

DESIGNED BY: GA
DATE: 08-18-2008
DRAWN BY: GA
SCALE: AS SHOWN
CHECKED BY: JT
SOLICITATION NUMBER: W912P6-08-B-0003
SUBMITTED BY: JOHN GROBOSKI, P.E.
DATE: 08-18-08

U.S. ARMY ENGINEER DISTRICT
CORPS OF ENGINEERS
CHICAGO, ILLINOIS

DES PLAINES RIVER, ILLINOIS
LOCAL FLOOD PROTECTION
FLOODWALL 37
RIVER RD/MILWAUKEE AVE.

WORK LIMITS AND WORK POINTS SHEET REFERENCE

SHEET REFERENCE NUMBER:
C-11
SHEET 16 OF 131

PLOT DATE: 8/18/2008
FILENAME: levee37-wpnt011.dgn

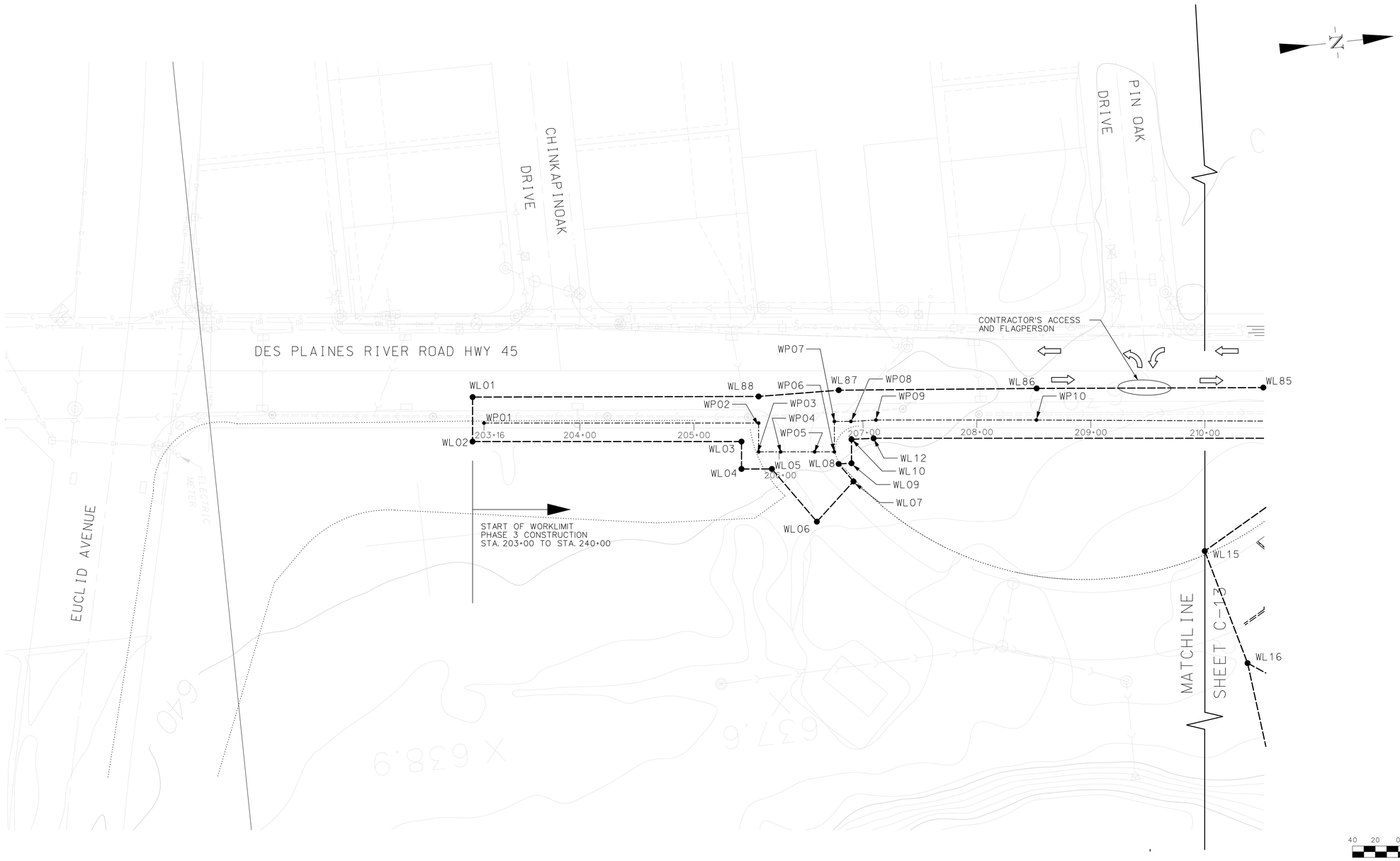

LEGEND

• WPXX	SSP DRIVING LINE WORK POINT
● WLXX	WORK LIMITS POINT
— — — — —	WORK LIMITS
—·—·—·—	FLOODWALL CENTERLINE
⇨	CONTRACTOR'S CONSTRUCTION ROUTE

NOTES:

1. THE SURVEY CONDITIONS PRESENTED IS FROM A 2000 SURVEY PERFORMED BY BOLLINGER LACH & ASSOCIATES AND REPRESENTS CONDITIONS EXISTING AT THAT TIME. ACTUAL CONDITIONS MAY VARY.
2. PRIOR TO ANY SITE WORK, THE CONTRACTOR SHALL VERIFY EXISTING CONDITIONS.
3. ELEVATIONS ARE IN FEET AND IN REFERENCE TO NATIONAL GEODETIC VERTICAL DATUM (NGVD) OF 1929.
4. THE GRID SYSTEM IS IN FEET AND IS THE ILLINOIS STATE PLANE COORDINATES SYSTEM, EAST ZONE, NORTH AMERICAN DATUM (NAD27).
5. SEE SHEET C-20 FOR COORDINATES OF WORK LIMITS AND DRIVE LINE WORK POINTS.
6. CONSTRUCTION ROUTES DAMAGE DUE TO CONSTRUCTION ACTIVITIES SHALL BE REPAIR TO PRE-CONSTRUCTION CONDITION.
7. REFER TO SHEET C-52 FOR MAINTENANCE OF TRAFFIC.

US Army Corps of Engineers
Chicago District

SYMBOL	AMENDMENT DESCRIPTION	DATE APPROVED	SYMBOL	DESCRIPTION	DATE APPROVED

DESIGNED BY: GA
DATE: 08-18-2008
DRAWN BY: GA
SCALE: AS SHOWN
CHECKED BY: JT
SOLICITATION NUMBER: W912P6-08-B-0003
SUBMITTED BY: JOHN GROBOSKI, P.E.
DATE: 08-18-08

U.S. ARMY ENGINEER DISTRICT
CORPS OF ENGINEERS
CHICAGO, ILLINOIS

DES PLAINES RIVER, ILLINOIS
LOCAL FLOOD PROTECTION
FLOODWALL 37
RIVER RD/MILWAUKEE AVE.
WORK LIMITS, WORK POINTS, & CONTRUCTION ROUTE
STA. 203+16 TO 210+00

SHEET REFERENCE NUMBER:
C-12
SHEET 17 OF 131

PLOT DATE: 8/18/2008
FILENAME: levee37-arlC12.dgn

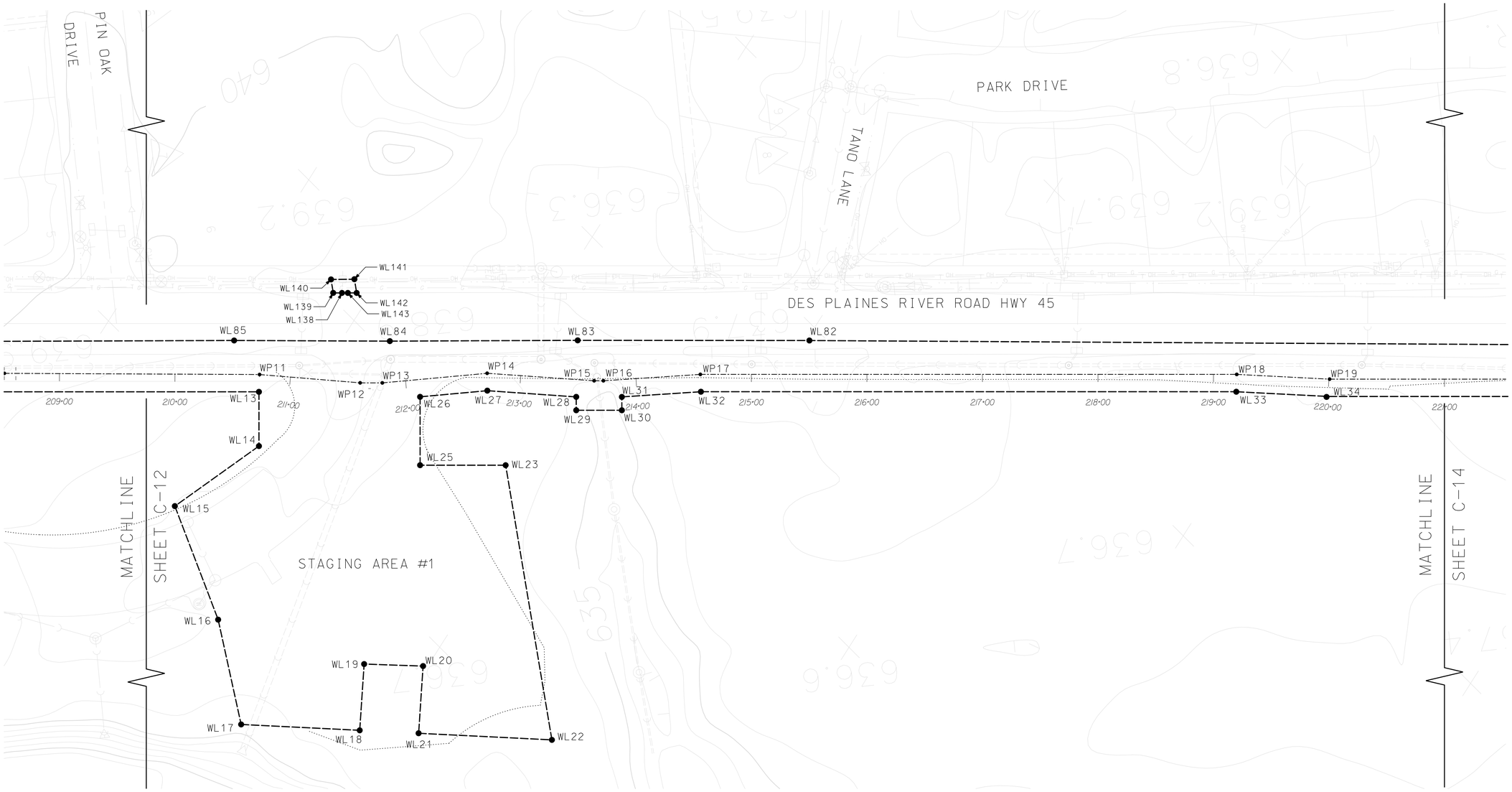

LEGEND

• WPXX	SSP DRIVING LINE WORK POINT
● WLXX	WORK LIMITS POINT
— — — —	WORK LIMITS
—·—·—	FLOODWALL CENTERLINE
⇨	CONSTRUCTION ROUTE

NOTES:

1. THE SURVEY CONDITIONS PRESENTED IS FROM A 2000 SURVEY PERFORMED BY BOLLINGER LACH & ASSOCIATES AND REPRESENTS CONDITIONS EXISTING AT THAT TIME. ACTUAL CONDITIONS MAY VARY.
2. PRIOR TO ANY SITE WORK, THE CONTRACTOR SHALL VERIFY EXISTING CONDITIONS.
3. ELEVATIONS ARE IN FEET AND IN REFERENCE TO NATIONAL GEODETIC VERTICAL DATUM (NGVD) OF 1929.
4. THE GRID SYSTEM IS IN FEET AND IS THE ILLINOIS STATE PLANE COORDINATES SYSTEM, EAST ZONE, NORTH AMERICAN DATUM (NAD27).
5. SEE SHEET C-20 FOR COORDINATES OF WORK LIMITS AND DRIVE LINE WORK POINTS.
6. CONSTRUCTION ROUTES DAMAGE DUE TO CONSTRUCTION ACTIVITIES SHALL BE REPAIR TO PRE-CONSTRUCTION CONDITION.
7. REFER TO SHEET C-52 FOR MAINTENANCE OF TRAFFIC.

40 20 0 40 80
SCALE IN FEET

US Army Corps of Engineers
Chicago District

SYMBOL	AMENDMENT DESCRIPTION	DATE APPROVED	SYMBOL	DESCRIPTION	DATE APPROVED

DESIGNED BY: GA
DRAWN BY: GA
CHECKED BY: JT
DATE: 08-18-2008
SCALE: AS SHOWN
SOLICITATION NUMBER: W912P6-08-B-0003
SUBMITTED BY: JOHN GROBOSKI, P.E. 08-18-08
DATE:

U.S.ARMY ENGINEER DISTRICT
CORPS OF ENGINEERS
CHICAGO, ILLINOIS

DES PLAINES RIVER, ILLINOIS
LOCAL FLOOD PROTECTION
FLOODWALL 37
RIVER RD/MILWAUKEE AVE.
WORK LIMITS, WORK POINTS
& CONSTRUCTION ROUTE
STA. 210+00 TO 221+00

SHEET REFERENCE NUMBER:
C-13
SHEET 18 OF 131

PLOT DATE: 8/18/2008
FILENAME: levee37-sht013.dgn

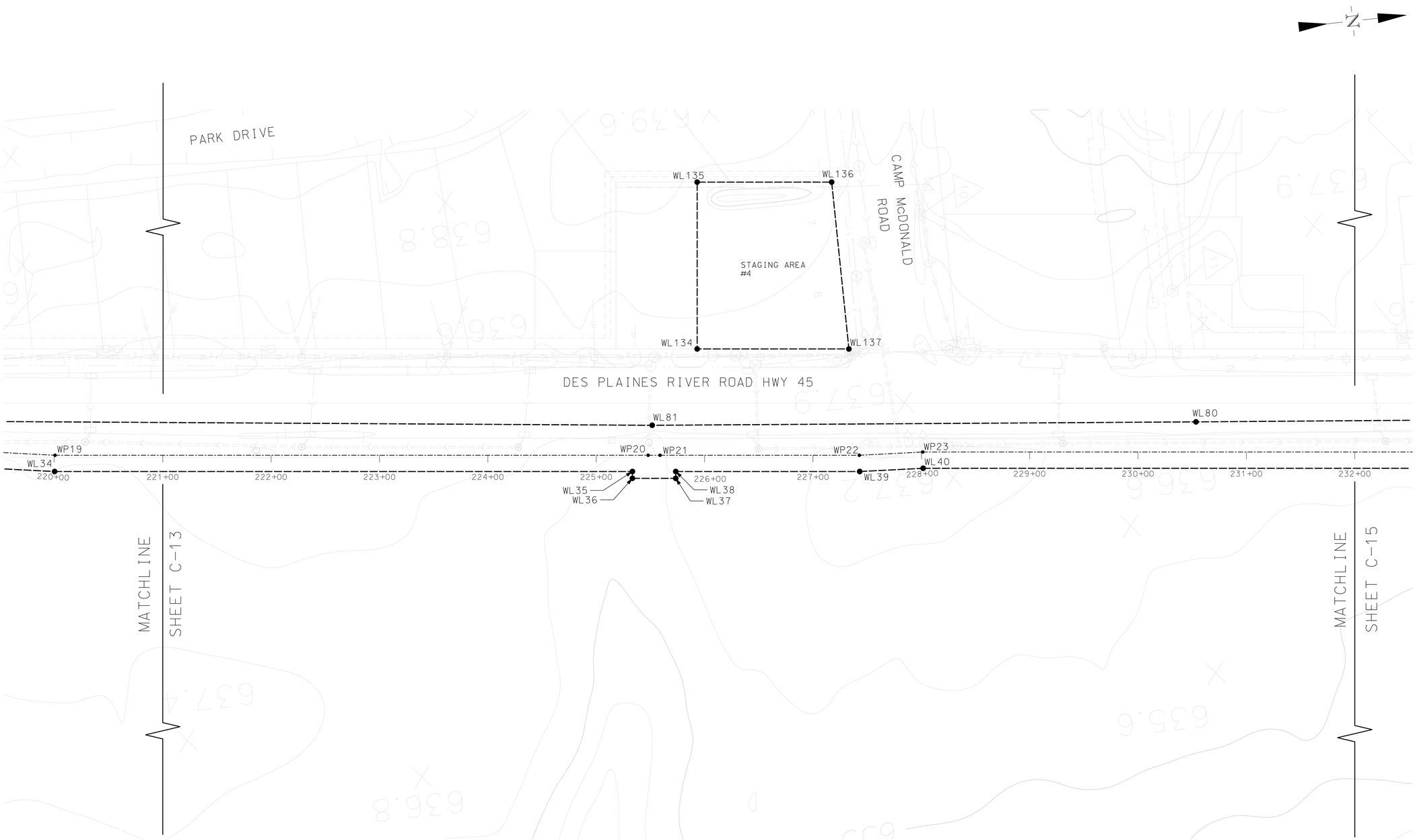

LEGEND

• WPXX	SSP DRIVING LINE WORK POINT
● WLXX	WORK LIMITS POINT
————	WORK LIMITS
—·—·—·—	FLOODWALL CENTERLINE

NOTES:

1. THE SURVEY CONDITIONS PRESENTED IS FROM A 2000 SURVEY PERFORMED BY BOLLINGER LACH & ASSOCIATES AND REPRESENTS CONDITIONS EXISTING AT THAT TIME. ACTUAL CONDITIONS MAY VARY.
2. PRIOR TO ANY SITE WORK, THE CONTRACTOR SHALL VERIFY EXISTING CONDITIONS.
3. ELEVATIONS ARE IN FEET AND IN REFERENCE TO NATIONAL GEODETIC VERTICAL DATUM (NGVD) OF 1929.
4. THE GRID SYSTEM IS IN FEET AND IS THE ILLINOIS STATE PLANE COORDINATES SYSTEM, EAST ZONE, NORTH AMERICAN DATUM (NAD27).
5. SEE SHEET C-20 FOR COORDINATES OF WORK LIMITS AND DRIVE LINE WORK POINTS.
6. REFER TO SHEET C-52 FOR MAINTENANCE OF TRAFFIC.
7. DUE TO ENVIRONMENTAL SENSITIVITY ON STAGING AREA #4, VEHICLE REFUELING OPERATIONS OR FUEL STORAGE ON THIS SITE IS NOT ALLOWED.

40 20 0 40 80
SCALE IN FEET

US Army Corps of Engineers
Chicago District

SYMBOL	AMENDMENT DESCRIPTION	DATE APPROVED	SYMBOL	DESCRIPTION	DATE APPROVED

DESIGNED BY: GA
DATE: 08-18-2008
DRAWN BY: GA
SCALE: AS SHOWN
CHECKED BY: JT
SOLICITATION NUMBER: W912P6-08-B-0003
SUBMITTED BY: JOHN GROBOSKI, P.E.
DATE: 08-18-08

U.S. ARMY ENGINEER DISTRICT
CORPS OF ENGINEERS
CHICAGO, ILLINOIS

DES PLAINES RIVER, ILLINOIS
LOCAL FLOOD PROTECTION
FLOODWALL 37
RIVER RD/MILWAUKEE AVE.
WORK LIMITS AND
WORK POINTS
STA. 221+00 TO 232+00

SHEET REFERENCE NUMBER:
C-14
SHEET 19 OF 131

PLOT DATE: 8/18/2008
FILENAME: lrwa37-sht14.dgn

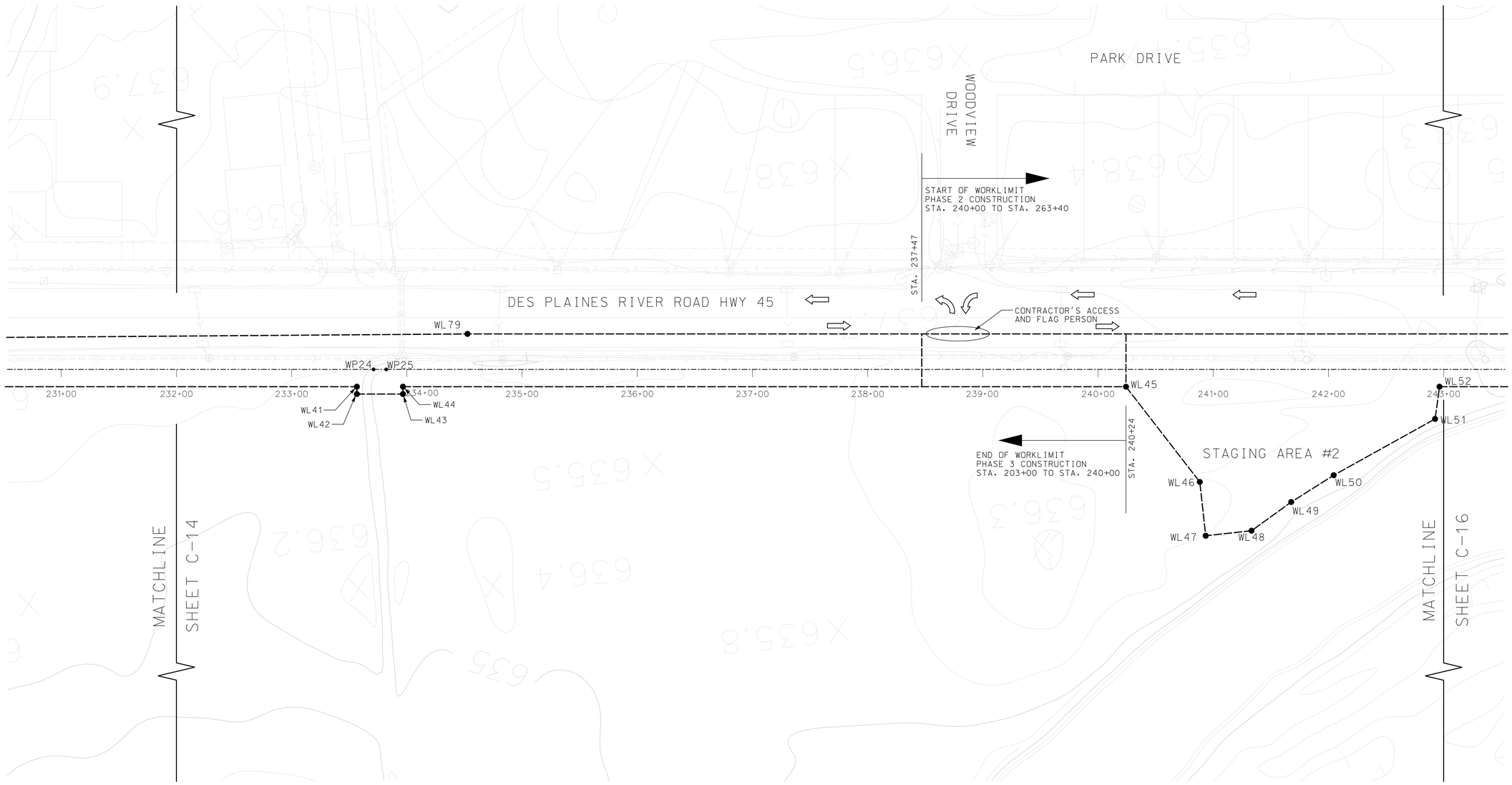

LEGEND

• WPXX	SSP DRIVING LINE WORK POINT
● WLXX	WORK LIMITS POINT
————	WORK LIMITS
-·-·-·-	FLOODWALL CENTERLINE
⇨	CONTRACTOR'S CONSTRUCTION ROUTE

NOTES:

1. THE SURVEY CONDITIONS PRESENTED IS FROM A 2000 SURVEY PERFORMED BY BOLLINGER LACH & ASSOCIATES AND REPRESENTS CONDITIONS EXISTING AT THAT TIME. ACTUAL CONDITIONS MAY VARY.
2. PRIOR TO ANY SITE WORK, THE CONTRACTOR SHALL VERIFY EXISTING CONDITIONS.
3. ELEVATIONS ARE IN FEET AND IN REFERENCE TO NATIONAL GEODETIC VERTICAL DATUM (NGVD) OF 1929.
4. THE GRID SYSTEM IS IN FEET AND IS THE ILLINOIS STATE PLANE COORDINATES SYSTEM, EAST ZONE, NORTH AMERICAN DATUM (NAD27).
5. SEE SHEET C-20 FOR COORDINATES OF WORK LIMITS AND DRIVE LINE WORK POINTS.
6. CONSTRUCTION ROUTES DAMAGE DUE TO CONSTRUCTION ACTIVITIES SHALL BE REPAIR TO PRE-CONSTRUCTION CONDITION.
7. REFER TO SHEET C-52 FOR MAINTENANCE OF TRAFFIC.

40 20 0 40 80
SCALE IN FEET

US Army Corps of Engineers
Chicago District

SYMBOL	AMENDMENT DESCRIPTION	DATE APPROVED	SYMBOL	DESCRIPTION	DATE APPROVED

DESIGNED BY: GA
DATE: 08-18-2008
DRAWN BY: GA
SCALE: AS SHOWN
CHECKED BY: JT
SOLICITATION NUMBER: W912P6-08-B-0003
SUBMITTED BY: JOHN GROBOSKI, P.E.
DATE: 08-18-08

U.S.ARMY ENGINEER DISTRICT
CORPS OF ENGINEERS
CHICAGO, ILLINOIS

DES PLAINES RIVER, ILLINOIS
LOCAL FLOOD PROTECTION
FLOODWALL 37
RIVER RD/MILWAUKEE AVE.

WORK LIMITS, WORK POINTS
& CONSTRUCTION ROUTE
STA. 232+00 TO 243+00

SHEET REFERENCE NUMBER:
C-15
SHEET 20 OF 131

PLOT DATE: 8/18/2008
FILENAME: levee37-sht015.dgn

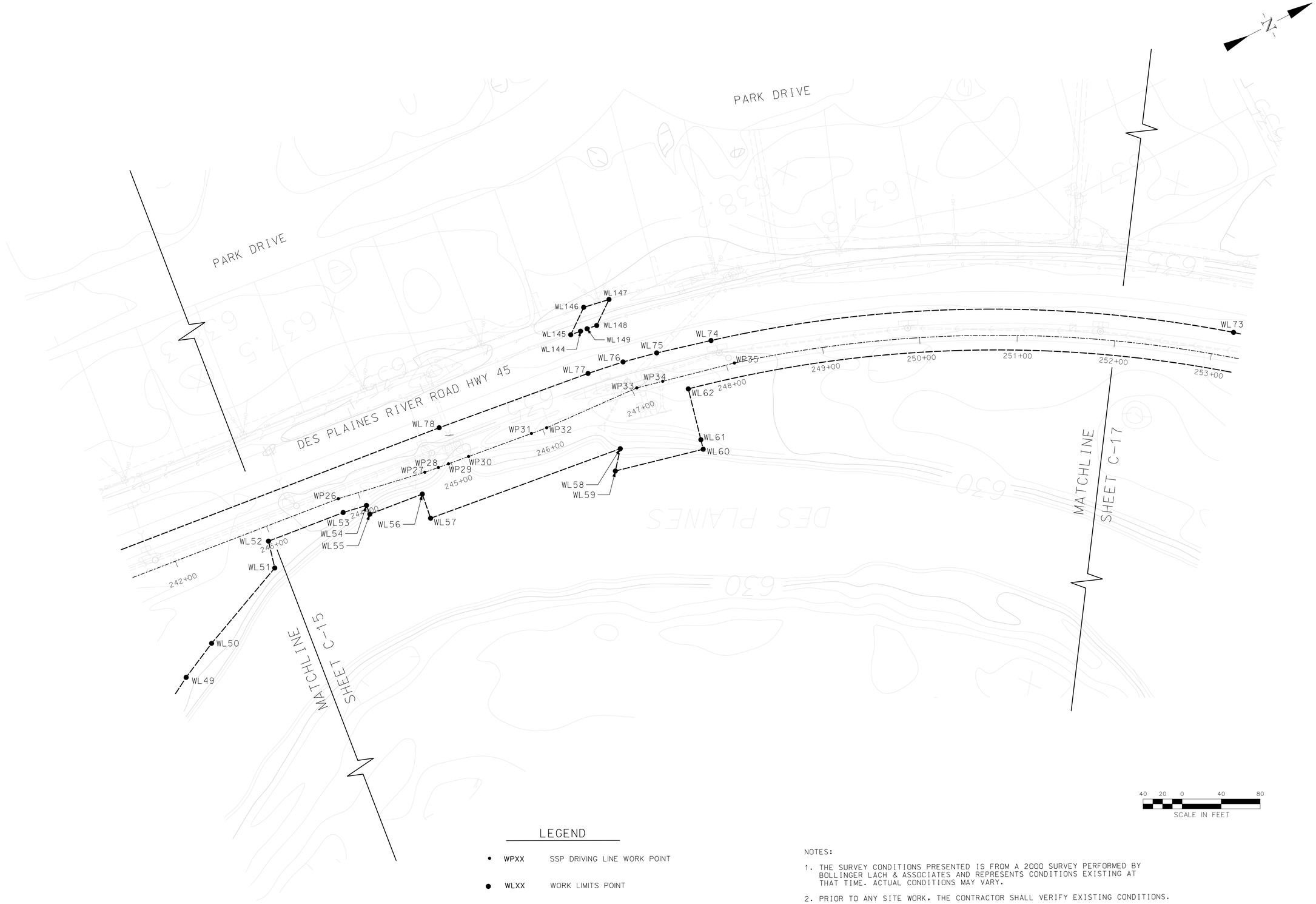

LEGEND

• WPXX	SSP DRIVING LINE WORK POINT
● WLXX	WORK LIMITS POINT
———	WORK LIMITS
—·—·—	FLOODWALL CENTERLINE

NOTES:

1. THE SURVEY CONDITIONS PRESENTED IS FROM A 2000 SURVEY PERFORMED BY BOLLINGER LACH & ASSOCIATES AND REPRESENTS CONDITIONS EXISTING AT THAT TIME. ACTUAL CONDITIONS MAY VARY.
2. PRIOR TO ANY SITE WORK, THE CONTRACTOR SHALL VERIFY EXISTING CONDITIONS.
3. ELEVATIONS ARE IN FEET AND IN REFERENCE TO NATIONAL GEODETIC VERTICAL DATUM (NGVD) OF 1929.
4. THE GRID SYSTEM IS IN FEET AND IS THE ILLINOIS STATE PLANE COORDINATES SYSTEM, EAST ZONE, NORTH AMERICAN DATUM (NAD27).
5. SEE SHEET C-20 FOR COORDINATES OF WORK LIMITS AND DRIVE LINE WORK POINTS.
6. REFER TO SHEET C-52 FOR MAINTENANCE OF TRAFFIC.

US Army Corps of Engineers Chicago District

SYMBOL	AMENDMENT DESCRIPTION	DATE	APPROVED	SYMBOL	DESCRIPTION	DATE	APPROVED

U.S. ARMY ENGINEER DISTRICT
CORPS OF ENGINEERS
CHICAGO, ILLINOIS

DESIGNED BY: GA | DATE: 08-18-2008
DRAWN BY: GA | SCALE: AS SHOWN
CHECKED BY: JT | SOLICITATION NUMBER: W912P6-08-B-0003
SUBMITTED BY: JOHN GROBOSKI, P.E. | DATE: 08-18-08

DES PLAINES RIVER, ILLINOIS
LOCAL FLOOD PROTECTION
FLOODWALL 37
RIVER RD/MILWAUKEE AVE.
WORK LIMITS AND
WORK POINTS
STA. 243+00 TO 252+00

SHEET REFERENCE NUMBER:
C-16

PLOT DATE: 8/18/2008
FILENAME: levee37-sht C16.dgn

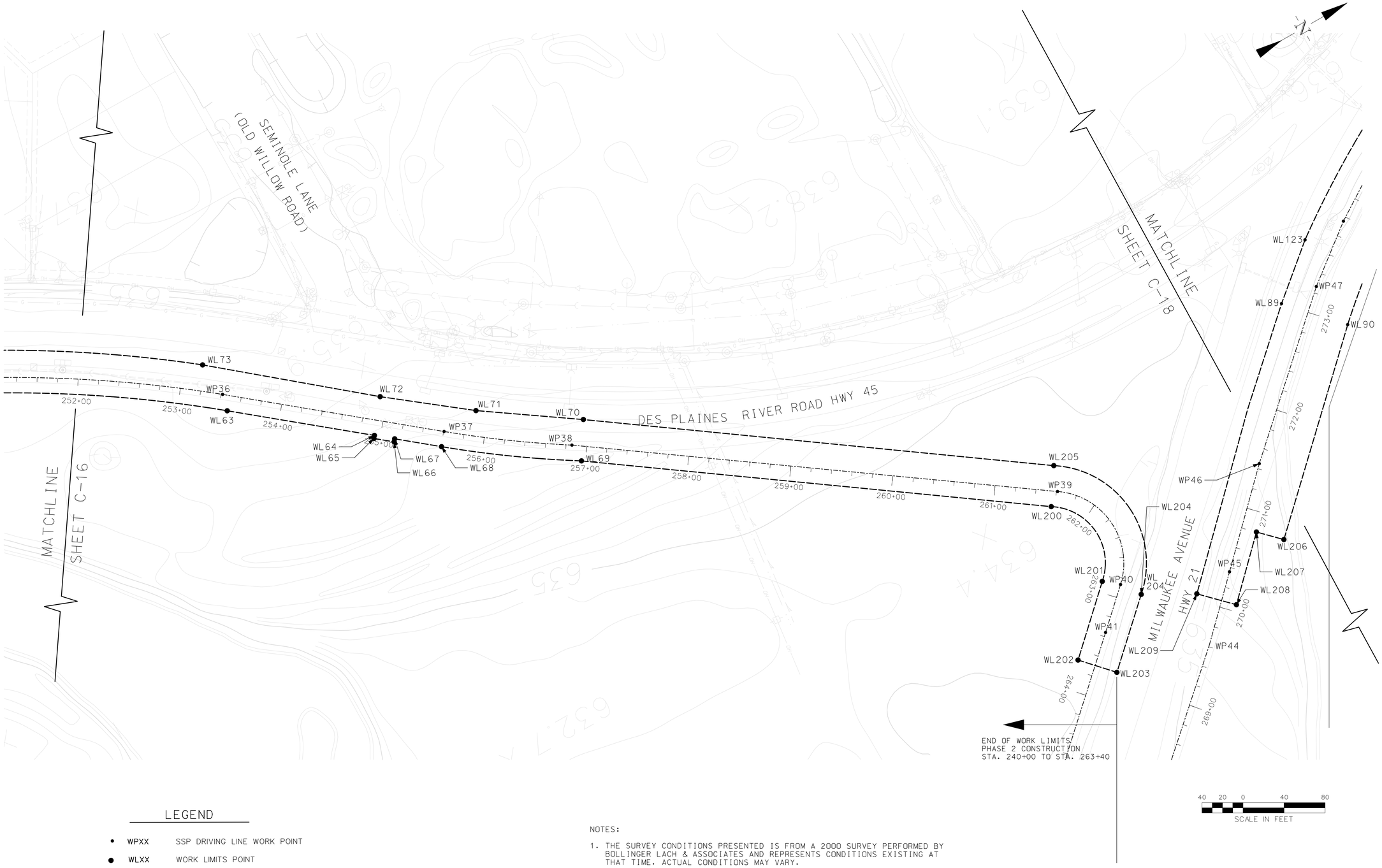

LEGEND

• WPXX	SSP DRIVING LINE WORK POINT
● WLXX	WORK LIMITS POINT
————	WORK LIMITS
—·—·—	FLOODWALL CENTERLINE

NOTES:

1. THE SURVEY CONDITIONS PRESENTED IS FROM A 2000 SURVEY PERFORMED BY BOLLINGER LACH & ASSOCIATES AND REPRESENTS CONDITIONS EXISTING AT THAT TIME. ACTUAL CONDITIONS MAY VARY.
2. PRIOR TO ANY SITE WORK, THE CONTRACTOR SHALL VERIFY EXISTING CONDITIONS.
3. ELEVATIONS ARE IN FEET AND IN REFERENCE TO NATIONAL GEODETIC VERTICAL DATUM (NGVD) OF 1929.
4. THE GRID SYSTEM IS IN FEET AND IS THE ILLINOIS STATE PLANE COORDINATES SYSTEM, EAST ZONE, NORTH AMERICAN DATUM (NAD27).
5. SEE SHEET C-20 FOR COORDINATES OF WORK LIMITS AND DRIVE LINE WORK POINTS.
6. CONSTRUCTION ROUTES DAMAGE DUE TO CONSTRUCTION ACTIVITIES SHALL BE REPAIR TO PRE-CONSTRUCTION CONDITION.
7. REFER TO SHEET C-52 FOR MAINTENANCE OF TRAFFIC.

US Army Corps of Engineers
Chicago District

SYMBOL	AMENDMENT DESCRIPTION	DATE APPROVED	SYMBOL	DESCRIPTION	DATE APPROVED

DESIGNED BY: GA | DATE: 08-18-2008
DRAWN BY: GA | SCALE: AS SHOWN
CHECKED BY: JT | SOLICITATION NUMBER: W912P6-08-B-0003
SUBMITTED BY: JOHN GROBOSKI, P.E. | DATE: 08-18-08

U.S. ARMY ENGINEER DISTRICT
CORPS OF ENGINEERS
CHICAGO, ILLINOIS

DES PLAINES RIVER, ILLINOIS
LOCAL FLOOD PROTECTION
FLOODWALL 37
RIVER RD/MILWAUKEE AVE.
WORK LIMITS, CONTROL POINTS, & CONSTRUCTION ROUTE
STA. 252+00 TO 271+50

SHEET REFERENCE NUMBER:
C-17
SHEET 22 OF 131

PLOT DATE: 8/18/2008
FILENAME: levee37-sht017.dgn

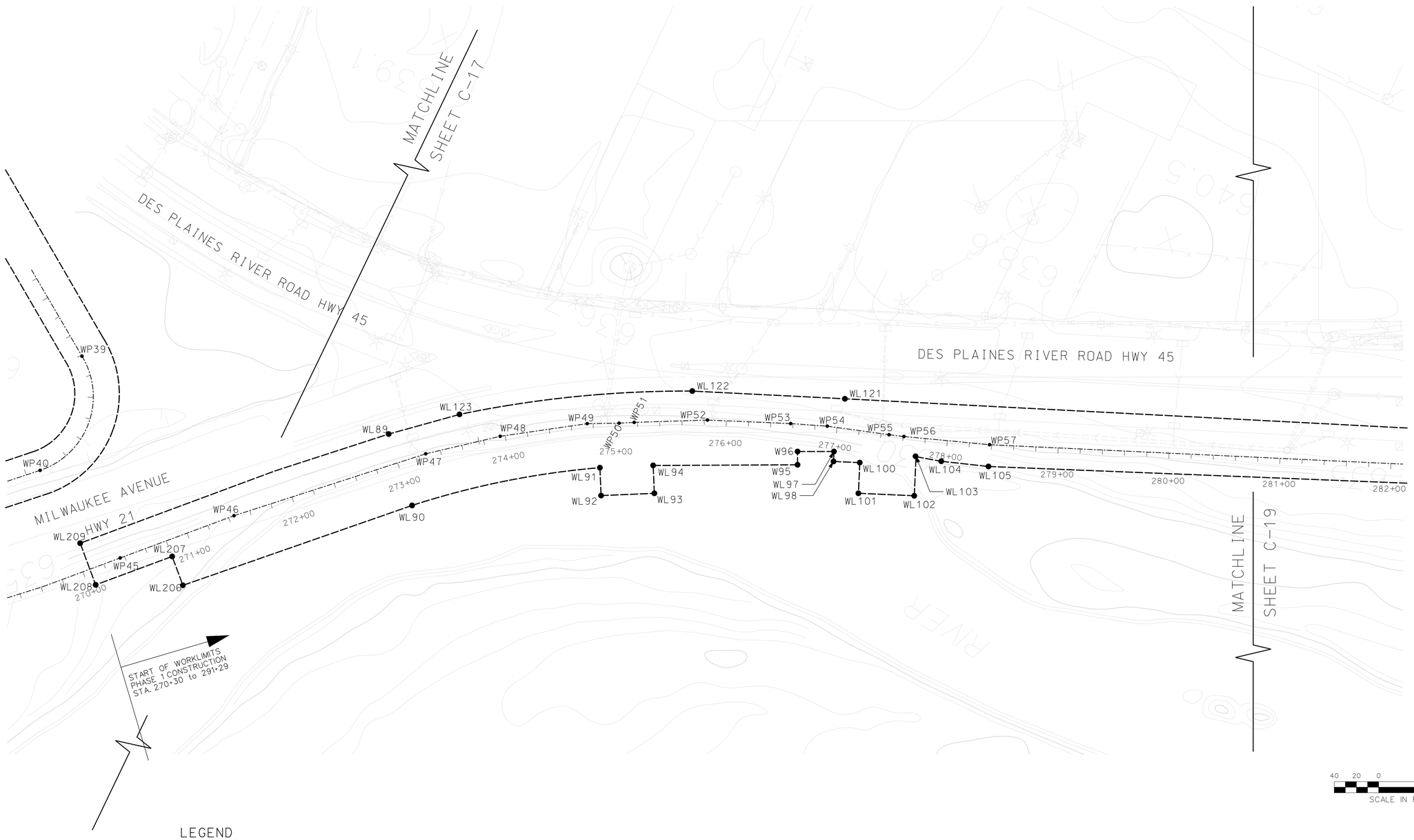

LEGEND

- • WPXX — SSP DRIVING LINE WORK POINT
- ● WLXX — WORK LIMITS POINT
- WORK LIMITS
- FLOODWALL CENTERLINE

NOTES:

1. THE SURVEY CONDITIONS PRESENTED IS FROM A 2000 SURVEY PERFORMED BY BOLLINGER LACH & ASSOCIATES AND REPRESENTS CONDITIONS EXISTING AT THAT TIME. ACTUAL CONDITIONS MAY VARY.
2. PRIOR TO ANY SITE WORK, THE CONTRACTOR SHALL VERIFY EXISTING CONDITIONS.
3. ELEVATIONS ARE IN FEET AND IN REFERENCE TO NATIONAL GEODETIC VERTICAL DATUM (NGVD) OF 1929.
4. THE GRID SYSTEM IS IN FEET AND IS THE ILLINOIS STATE PLANE COORDINATES SYSTEM, EAST ZONE, NORTH AMERICAN DATUM (NAD27).
5. SEE SHEET C-20 FOR COORDINATES OF WORK LIMITS AND DRIVE LINE WORK POINTS.
6. REFER TO SHEET C-52 FOR MAINTENANCE OF TRAFFIC.

US Army Corps of Engineers
Chicago District

SYMBOL	AMENDMENT DESCRIPTION	DATE APPROVED	SYMBOL	DESCRIPTION	DATE APPROVED

DESIGNED BY: GA
DATE: 08-18-2008
DRAWN BY: GA
SCALE: AS SHOWN
CHECKED BY: JT
SOLICITATION NUMBER: W912P6-08-B-0003
SUBMITTED BY: JOHN GROBOSKI, P.E.
DATE: 08-18-08

U.S. ARMY ENGINEER DISTRICT
CORPS OF ENGINEERS
CHICAGO, ILLINOIS

DES PLAINES RIVER, ILLINOIS
LOCAL FLOOD PROTECTION
FLOODWALL 37
RIVER RD/MILWAUKEE AVE.

WORK LIMITS &
WORK POINTS
STA. 271+50 TO 280+80

SHEET REFERENCE NUMBER:
C-18
SHEET 23 OF 131

PLOT DATE: 8/18/2008
FILENAME: levee37-sht018.dgn

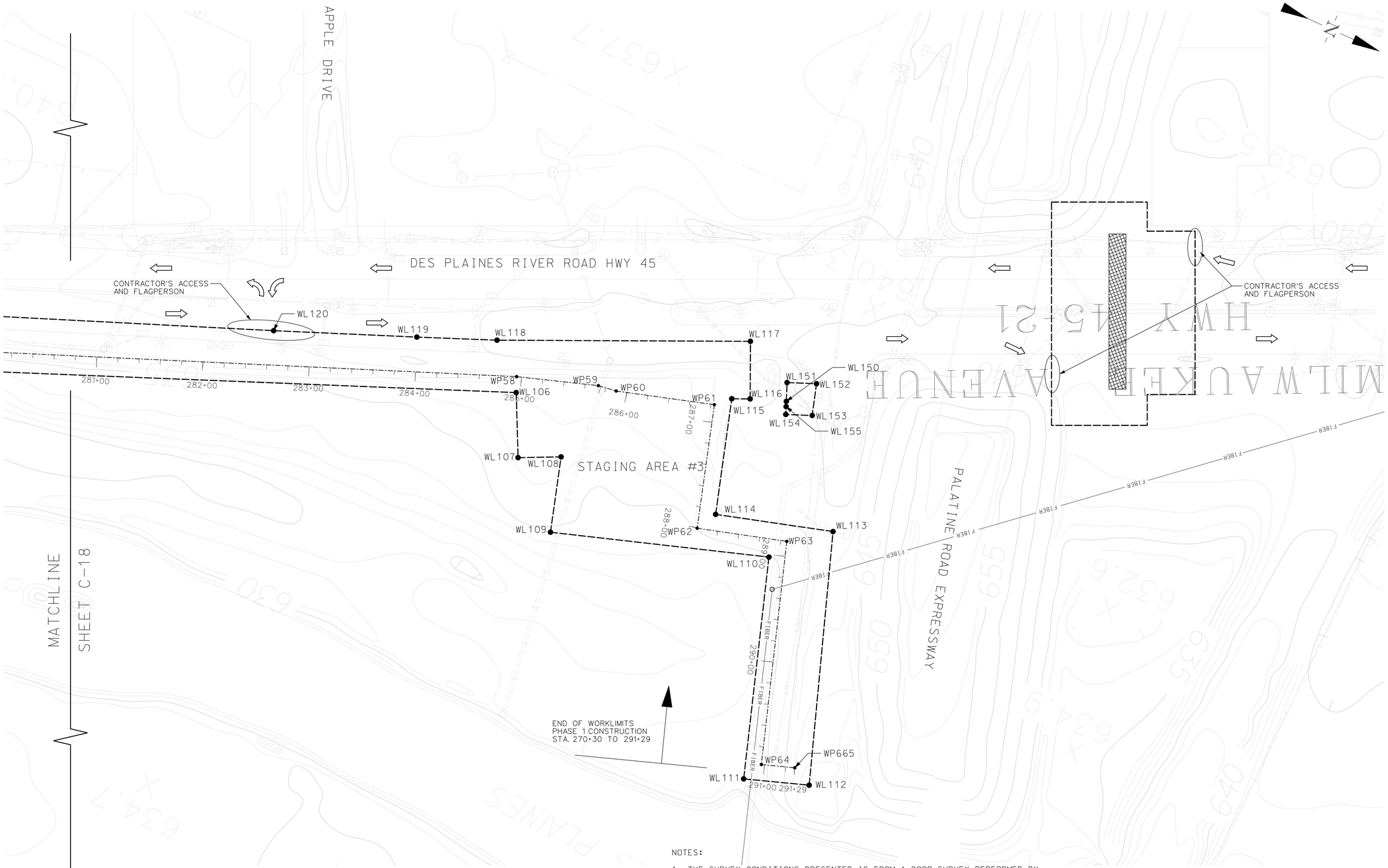

NOTES:

1. THE SURVEY CONDITIONS PRESENTED IS FROM A 2000 SURVEY PERFORMED BY BOLLINGER LACH & ASSOCIATES AND REPRESENTS CONDITIONS EXISTING AT THAT TIME. ACTUAL CONDITIONS MAY VARY.
2. PRIOR TO ANY SITE WORK, THE CONTRACTOR SHALL VERIFY EXISTING CONDITIONS.
3. ELEVATIONS ARE IN FEET AND IN REFERENCE TO NATIONAL GEODETIC VERTICAL DATUM (NGVD) OF 1929.
4. THE GRID SYSTEM IS IN FEET AND IS THE ILLINOIS STATE PLANE COORDINATES SYSTEM, EAST ZONE, NORTH AMERICAN DATUM (NAD27).
5. SEE SHEET C-20 FOR COORDINATES OF WORK LIMITS AND DRIVE LINE WORK POINTS.
6. SEE SHEET C-19A FOR SWING GATE WORK LIMITS AND COORDINATES.
7. CONSTRUCTION ROUTES DAMAGE DUE TO CONSTRUCTION ACTIVITIES SHALL BE REPAIR TO PRE-CONSTRUCTION CONDITION.
8. SEE SHEET C-52 FOR MAINTENANCE OF TRAFFIC AND LANE CLOSURE.

LEGEND

• WPXX	SSP DRIVING LINE WORK POINT
● WLXX	WORK LIMITS POINT
— — — —	WORK LIMITS
—·—·—	FLOODWALL CENTERLINE
▨	SWING GATE
⇨	CONSTRUCTION ROUTE

40 20 0 40 80
SCALE IN FEET

US Army Corps of Engineers
Chicago District

SYMBOL	AMENDMENT DESCRIPTION	DATE APPROVED	SYMBOL	DESCRIPTION	DATE APPROVED

DESIGNED BY: GA
DRAWN BY: GA
CHECKED BY: JT
SUBMITTED BY: JOHN GROBOSKI, P.E.
DATE: 08-18-2008
SCALE: AS SHOWN
SOLICITATION NUMBER: W912P6-08-B-0003
DATE: 08-18-08

U.S.ARMY ENGINEER DISTRICT
CORPS OF ENGINEERS
CHICAGO, ILLINOIS

DES PLAINES RIVER, ILLINOIS
LOCAL FLOOD PROTECTION
FLOODWALL 37
RIVER RD/MILWAUKEE AVE.
WORK LIMITS, WORK POINTS
& CONSTRUCTION ROUTE
STA. 280+80 TO 291+29

SHEET REFERENCE NUMBER:
C-19
SHEET 24 OF 131

PLOT DATE: 8/18/2008
FILENAME: levee37-sht019.dgn

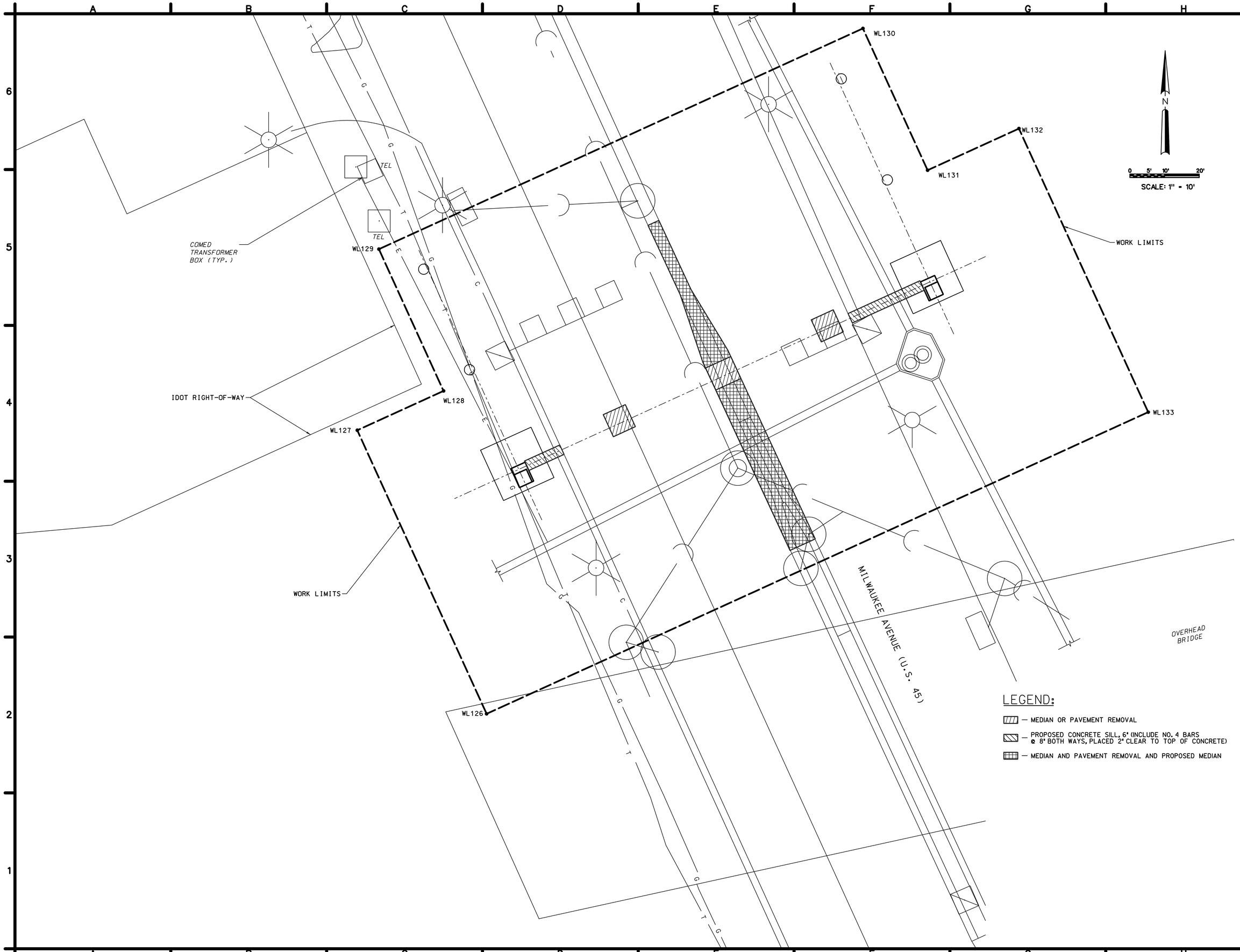

US ARMY CORPS OF ENGINEERS
Chicago District

SYMBOL	AMENDMENT DESCRIPTION	DATE	APPROVED	SYMBOL	DESCRIPTION	DATE	APPROVED

DESIGNED BY: MSC
DATE: 08-18-2008
DRAWN BY: MSC
SCALE: 1" = 10'
CHECKED BY: DRH
CONTRACT NUMBER: W912P6-08-B-0003
SUBMITTED BY:
DATE:

U.S. ARMY ENGINEER DISTRICT
CORPS OF ENGINEERS
CHICAGO, ILLINOIS

CTE AECOM
303 East Wacker Drive, Suite 600, Chicago, Illinois 60601-5276
T 312.938.0300 F 312.938.1109 www.cte.aecom.com

DES PLAINES RIVER, ILLINOIS
LOCAL FLOOD PROTECTION
FLOODWALL 37
RIVER RD/MILWAUKEE AVE.
MILWAUKEE AVENUE FLOOD GATE
CLOSURE STRUCTURE
WORK LIMITS

SHEET REFERENCE NUMBER:
C-19A
SHEET 25 OF 131

PLOT DATE: 8/18/2008
FILENAME: $FILE$

WORK LIMITS		
NUMBER	NORTHING	EASTING
WL1	1975056.48	619880.30
WL2	1975052.20	619919.07
WL3	1975286.53	619944.91
WL4	1975283.90	619968.76
WL5	1975310.38	619971.68
WL6	1975344.52	620021.93
WL7	1975380.28	619990.38
WL8	1975369.04	619973.70
WL9	1975380.31	619974.36
WL10	1975382.60	619953.52
WL11	NOT USED	
WL12	1975402.07	619954.71
WL13	1975762.92	619994.49
WL14	1975757.78	620041.14
WL15	1975679.73	620084.79
WL16	1975706.23	620186.54
WL17	1975716.08	620278.83
WL18	1975817.53	620295.14
WL19	1975827.62	620238.58
WL20	1975878.15	620245.90
WL21	1975867.92	620303.24
WL22	1975981.98	620321.58
WL23	1975968.21	620080.99
WL25	1975894.63	620072.88
WL26	1975901.11	620014.08
WL27	1975959.52	620015.15
WL28	1976035.43	620028.93
WL29	1976034.16	620040.45
WL30	1976073.42	620044.77
WL31	1976074.69	620033.29
WL32	1976143.20	620036.33
WL33	1976603.82	620087.11
WL34	1976683.25	620099.99
WL35	1977213.21	620158.41
WL36	1977212.52	620164.69
WL37	1977252.27	620169.08
WL38	1977252.97	620162.80
WL39	1977421.66	620181.39
WL40	1977480.18	620184.83
WL41	1978031.79	620245.64
WL42	1978031.09	620251.98
WL43	1978070.85	620256.36
WL44	1978071.55	620250.02
WL45	1978695.38	620318.79
WL46	1978750.00	620408.00
WL47	1978750.00	620455.00
WL48	1978790.00	620455.00
WL49	1978827.00	620434.00
WL50	1978866.18	620414.94
WL51	1978959.00	620376.00
WL52	1978965.89	620348.62
WL53	1979047.27	620357.59
WL54	1979071.87	620362.05
WL55	1979070.81	620371.63
WL56	1979128.01	620377.93
WL57	1979124.22	620403.81

WORK LIMITS		
NUMBER	NORTHING	EASTING
WL58	1979329.56	620429.51
WL59	1979314.60	620447.49
WL60	1979404.82	620468.90
WL61	1979407.13	620459.17
WL62	1979419.52	620406.98
WL63	1979941.07	620662.07
WL64	1980053.70	620754.12
WL65	1980051.81	620756.44
WL66	1980067.29	620769.09
WL67	1980069.19	620766.77
WL68	1980105.05	620796.06
WL69	1980216.55	620875.75
WL70	1980238.17	620841.67
WL71	1980151.62	620782.18
WL72	1980077.27	620724.05
WL73	1979942.46	620611.37
WL74	1979462.93	620373.65
WL75	1979407.63	620359.43
WL76	1979372.77	620351.83
WL77	1979335.49	620345.87
WL78	1979174.51	620325.46
WL79	1978132.26	620210.60
WL80	1977735.12	620169.87
WL81	1977236.03	620117.99
WL82	1976241.39	620002.57
WL83	1976042.05	619980.46
WL84	1975880.35	619963.30
WL85	1975746.44	619947.98
WL86	1975548.85	619926.90
WL87	1975376.19	619909.46
WL88	1975305.79	619907.23
WL89	1980884.91	621081.05
WL90	1980930.75	621130.80
WL91	1981070.55	621029.70
WL92	1981081.96	621052.12
WL93	1981124.74	621030.35
WL94	1981113.34	621007.95
WL95	1981231.44	620953.51
WL96	1981226.46	620942.59
WL97	1981256.30	620928.99
WL98	1981259.66	620937.31
WL99	NOT USED	
WL100	1981281.59	620928.46
WL101	1981291.94	620954.12
WL102	1981338.62	620935.30
WL103	1981325.44	620902.61
WL104	1981347.85	620896.93
WL105	1981388.48	620883.55
WL106	1981997.13	620634.94
WL107	1982024.09	620689.89
WL108	1982060.60	620672.47
WL109	1982080.92	620741.06
WL110	1982277.53	620677.16
WL111	1982342.41	620876.78
WL112	1982400.90	620856.64
WL113	1982322.39	620630.31

WORK LIMITS		
NUMBER	NORTHING	EASTING
WL114	1982215.26	620661.39
WL115	1982183.93	620556.14
WL116	1982199.73	620549.11
WL117	1982177.49	620499.74
WL118	1981960.28	620597.59
WL119	1981890.48	620626.20
WL120	1981765.46	620676.57
WL121	1981245.56	620881.71
WL122	1981117.64	620932.38
WL123	1980935.60	621038.47
WL124	NOT USED	
WL125	NOT USED	
WL126	1982380.77	620263.16
WL127	1982462.66	620225.82
WL128	1982474.02	620250.73
WL129	1982514.96	620232.06
WL130	1982578.69	620371.85
WL131	1982537.74	620390.52
WL132	1982549.77	620416.90
WL133	1982467.88	620454.24
WL134	1977284.99	620052.55
WL135	1977301.86	619899.47
WL136	1977425.22	619913.07
WL137	1977424.14	620067.88
WL138	1975843.74	619917.31
WL139	1975836.22	619916.47
WL140	1975835.59	619904.68
WL141	1975855.73	619906.69
WL142	1975856.36	619918.70
WL143	1975848.81	619917.88
WL144	1979348.48	620303.91
WL145	1979337.88	620302.59
WL146	1979362.54	620283.67
WL147	1979389.27	620288.39
WL148	1979365.89	620306.31
WL149	1979355.56	620304.80
WL150	1982231.63	620537.10
WL151	1982224.94	620520.73
WL152	1982250.59	620510.24
WL153	1982259.29	620539.10
WL154	1982236.29	620548.50
WL155	1982233.51	620541.71
WL156 TO WL199 NOT USED		
WL200	1980207.466	620870.023
WL201	1980591.885	621141.547
WL202	1980598.886	621229.497
WL203	1980540.369	621284.365
WL204	1980567.275	621313.547
WL205	1980625.598	621259.320
WL206	1980613.867	621108.081
WL207	1980231.072	620836.602
WL200	1980207.466	620870.023
WL208	1980701.127	621314.079
WL209	1980753.211	621262.218
WL210	1980772.795	621281.885
WL211	1980949.033	621113.788
WL212	1980904.796	621062.854
WL213	1980805.364	621153.840
WL214	1980672.901	621285.737

WORK POINTS		
PT	NORTHING	EASTING
WP0	1974948.62	619891.31
WP1	1975063.92	619904.02
WP2	1975303.22	619930.40
WP3	1975300.46	619955.50
WP4	1975319.59	619957.61
WP5	1975349.27	619960.88
WP6	1975366.49	619962.77
WP7	1975369.42	619936.27
WP8	1975383.81	619937.85
WP9	1975405.77	619939.04
WP10	1975545.59	619954.45
WP11	1975765.09	619979.66
WP12	1975850.86	619996.37
WP13	1975869.91	619998.50
WP14	1975961.02	620000.18
WP15	1976052.36	620016.76
WP16	1976060.31	620017.64
WP17	1976144.34	620021.36
WP18	1976605.85	620072.24
WP19	1976685.29	620085.13
WP20	1977229.26	620145.09
WP21	1977240.20	620146.30
WP22	1977422.93	620166.44
WP23	1977481.46	620169.88
WP24	1978047.85	620232.32
WP25	1978058.78	620233.52
WP26	1979049.43	620342.73
WP27	1979140.59	620359.28
WP28	1979155.11	620361.27
WP29	1979166.05	620362.67
WP30	1979187.79	620365.42
WP31	1979255.81	620373.98
WP32	1979272.36	620375.93
WP33	1979373.13	620381.91

WORK POINTS		
PT	NORTHING	EASTING
WP34	1979399.80	620388.07
WP35	1979473.64	620405.06
WP36	1979945.07	620645.99
WP37	1980114.54	620784.45
WP38	1980216.12	620857.77
WP39	1980604.51	621131.79
WP40	1980612.85	621240.99
WP41	1980577.02	621274.30
WP42	1980390.53	621446.25
WP43	1980453.96	621519.40
WP44	1980658.75	621335.11
WP45	1980711.19	621282.88
WP46	1980788.65	621205.74
WP47	1980922.63	621083.39
WP48	1980977.11	621041.22
WP49	1981043.70	620998.36
WP50	1981069.66	620986.02
WP51	1981081.72	620979.76
WP52	1981140.89	620950.48
WP53	1981210.38	620922.27
WP54	1981241.29	620910.71
WP55	1981295.17	620894.66
WP56	1981308.03	620890.56
WP57	1981381.26	620865.31
WP58	1981991.27	620621.13
WP59	1982064.69	620596.96
WP60	1982082.04	620594.62
WP61	1982171.39	620568.02
WP62	1982204.85	620680.46
WP63	1982286.66	620656.73
WP64	1982351.96	620857.63
WP65	1982381.80	620847.36

WORK LIMIT DATA			
CURVE BETWEEN POINTS	CENTER OF CURVE (CC)		RADIUS LENGTH (FT)
	NORTHING	EASTING	
WL62 & WL63	1979135.74	621647.95	1273.0
WL68 & WL69	1980777.60	619972.87	1063.0
WL73 & WL74	1979137.66	621632.30	1300.0
WL90 & WL91	1981438.39	621685.60	752.0
WL122 & WL123	1981530.87	621850.69	1007.0
WL201 & WL202	1980562.70	621188.12	54.96
WL205 & WL206	1980562.70	621188.12	95.0

WORK POINT DATA			
CURVE BETWEEN POINTS	CENTER OF CURVE (CC)		RADIUS LENGTH (FT)
	NORTHING	EASTING	
WP35 AND WP36	1979135.73	621647.95	1288.0
WP37 AND WP38	1980777.60	619972.87	1048.0
WP39 AND WP40	1980565.20	621189.71	70.0

US Army Corps of Engineers
Chicago District

SYMBOL	AMENDMENT DESCRIPTION	DATE APPROVED	SYMBOL	DESCRIPTION	DATE APPROVED

DESIGNED BY: GA
DATE: 08-18-2008
DRAWN BY: GA
SCALE: AS SHOWN
CHECKED BY: JT
SOLICITATION NUMBER: W912P6-08-B-0003
SUBMITTED BY: JOHN GROBOSKI, P.E.
DATE: 08-18-08

U.S.ARMY ENGINEER DISTRICT
CORPS OF ENGINEERS
CHICAGO, ILLINOIS

DES PLAINES RIVER, ILLINOIS
LOCAL FLOOD PROTECTION
FLOODWALL 37
RIVER RD/MILWAUKEE AVE.
UNIFIED
TABLE OF CONTROL POINTS

SHEET REFERENCE NUMBER:
C-20
SHEET 26 OF 131

PLOT DATE: 8/18/2008
FILENAME: levee37-sht020.dgn

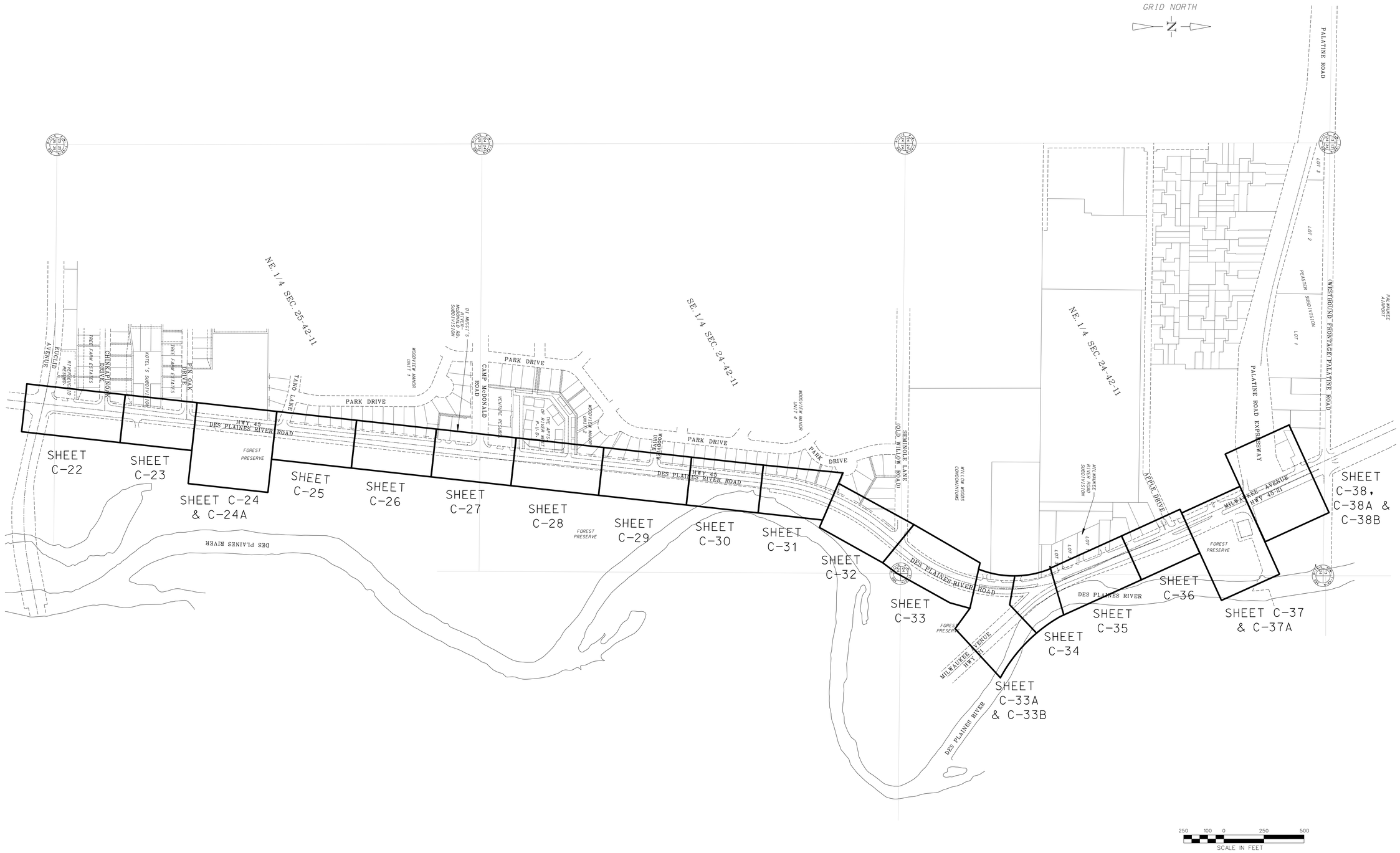

US Army Corps of Engineers
Chicago District

SYMBOL	AMENDMENT DESCRIPTION	DATE APPROVED	SYMBOL	DESCRIPTION	DATE APPROVED

DESIGNED BY: GA
DATE: 08-18-2008
DRAWN BY: GA
SCALE: AS SHOWN
CHECKED BY: JT
SOLICITATION NUMBER: W912P6-08-B-0003
SUBMITTED BY: JOHN GROBOSKI, P.E.
DATE: 08-18-08

U.S.ARMY ENGINEER DISTRICT
CORPS OF ENGINEERS
CHICAGO, ILLINOIS

DES PLAINES RIVER, ILLINOIS
LOCAL FLOOD PROTECTION
FLOODWALL 37
RIVER RD/MILWAUKEE AVE.
SITE PLAN AND PROFILE
SHEET REFERENCE

SHEET REFERENCE NUMBER:
C-21
SHEET 27 OF 131

PLOT DATE: 8/18/2008
FILENAME: levee37-sht021.dgn

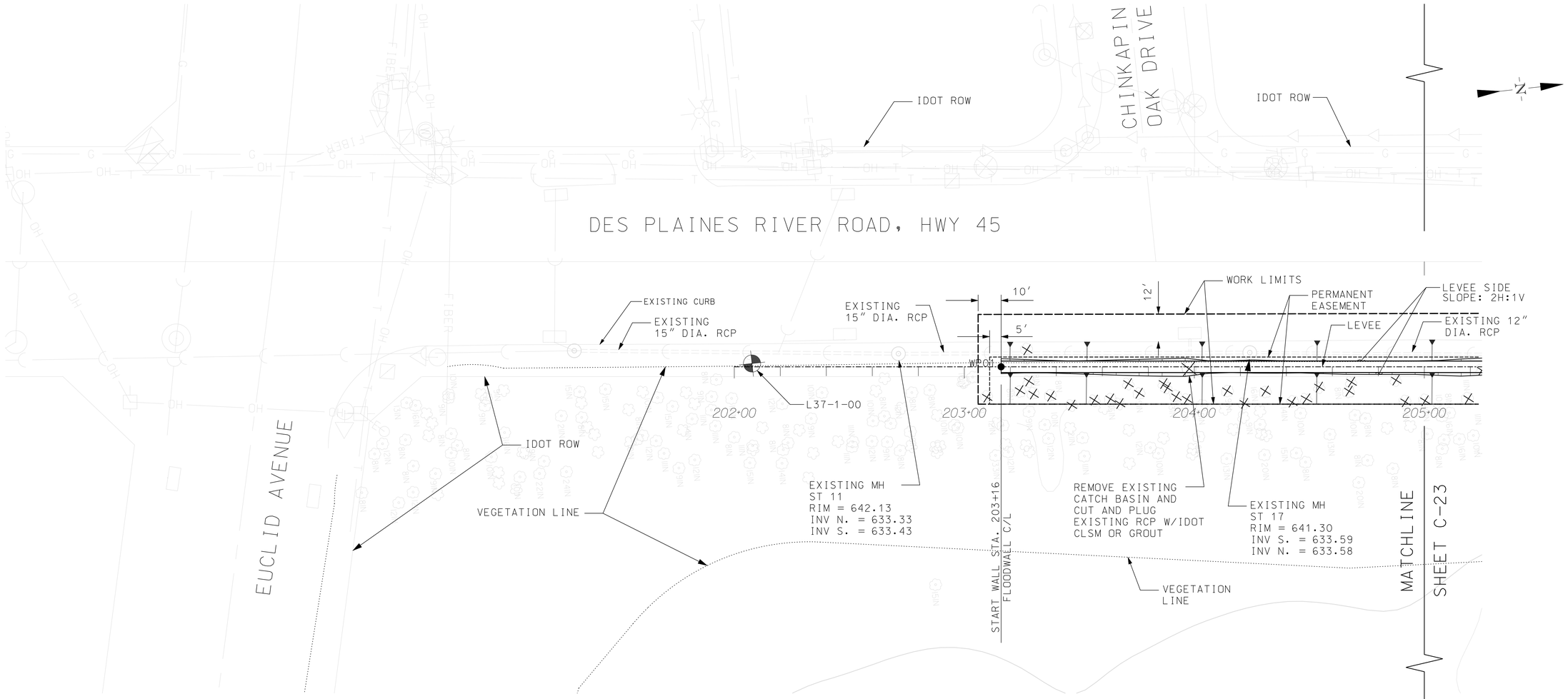

20 10 0 20 40
SCALE IN FEET

NOTES:

1. SEE SHEET G-03 FOR CONSTRUCTION NOTES.
2. REFER TO SHEET C-04 TO C-10 FOR UTILITY SURVEY. EXISTING UTILITIES NOT INDICATED TO BE REMOVED SHALL REMAIN IN PLACE AND PROTECTED DURING CONSTRUCTION.
3. TREES WITHOUT DBH SHOWN OR LISTED ARE TREES LESS THAN 8 INCHES DBH.
4. REFER TO STRUCTURAL SHEET FOR STRUCTURES AND SHEET PILE DETAIL.
5. DES PLAINES RIVER ROAD AND MILWAUKEE ROAD FLOODWALL CENTERLINE STATIONING IS 202+00 TO 291+29.
6. CONTRACTOR SHALL ADEQUATELY PROTECT OPEN EXCAVATION FROM INTRUSION.
7. ROADWAY AND CURB/GUTTER, WITHIN THE WORKLIMITS, DAMAGE DUE TO CONSTRUCTION ACTIVITES SHALL BE RESTORED TO PRE-CONSTRUCTION GRADE AND CONDITIONS.
8. ALL TREES WITHIN THE WORKLIMITS NOT DESIGNATED TO BE REMOVED SHALL BE PROTECTED IN ACCORDANCE TO SECTION 02931 TREE PROTECTION. SEE SHEET C-42 FOR TREE PROTECTION DETAILS.
9. SEE SHEET C-42 FOR THE GRAVEL PATH TYP. SECTION.
10. PRIOR TO LEVEE PLACEMENT, THE CONTRACTOR SHALL STRIP EXISTING GRADE A MINIMUM OF 1.0'.

20 10 0 20 40
HORIZONTAL SCALE IN FEET

4 2 0 4 8
VERTICAL SCALE IN FEET

FLOODWALL CENTERLINE PROFILE

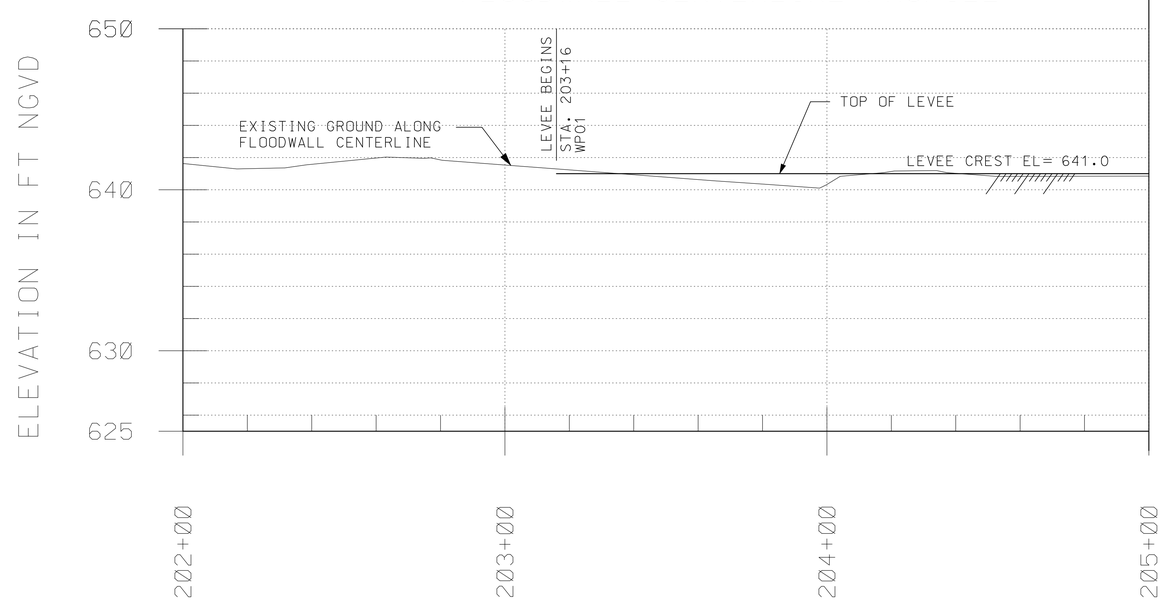

US Army Corps of Engineers
Chicago District

SYMBOL	AMENDMENT DESCRIPTION	DATE APPROVED	SYMBOL	DESCRIPTION	DATE APPROVED

A

DESIGNED BY: GA | DATE: 08-18-2008
DRAWN BY: GA | SCALE: AS SHOWN
CHECKED BY: JT | SOLICITATION NUMBER: W912P6-08-B-0003
JOHN GROBOSKI, P.E. 08-18-08
SUBMITTED BY: | DATE:

U.S.ARMY ENGINEER DISTRICT
CORPS OF ENGINEERS
CHICAGO, ILLINOIS

DES PLAINES RIVER, ILLINOIS
LOCAL FLOOD PROTECTION
FLOODWALL 37
RIVER RD/MILWAUKEE AVE.

SITE PLAN AND PROFILE
STA. 202+00 TO 205+00

SHEET REFERENCE NUMBER:
C-22
SHEET 28 OF 131

PLOT DATE: 8/18/2008
FILENAME: levee37-sht022.dgn

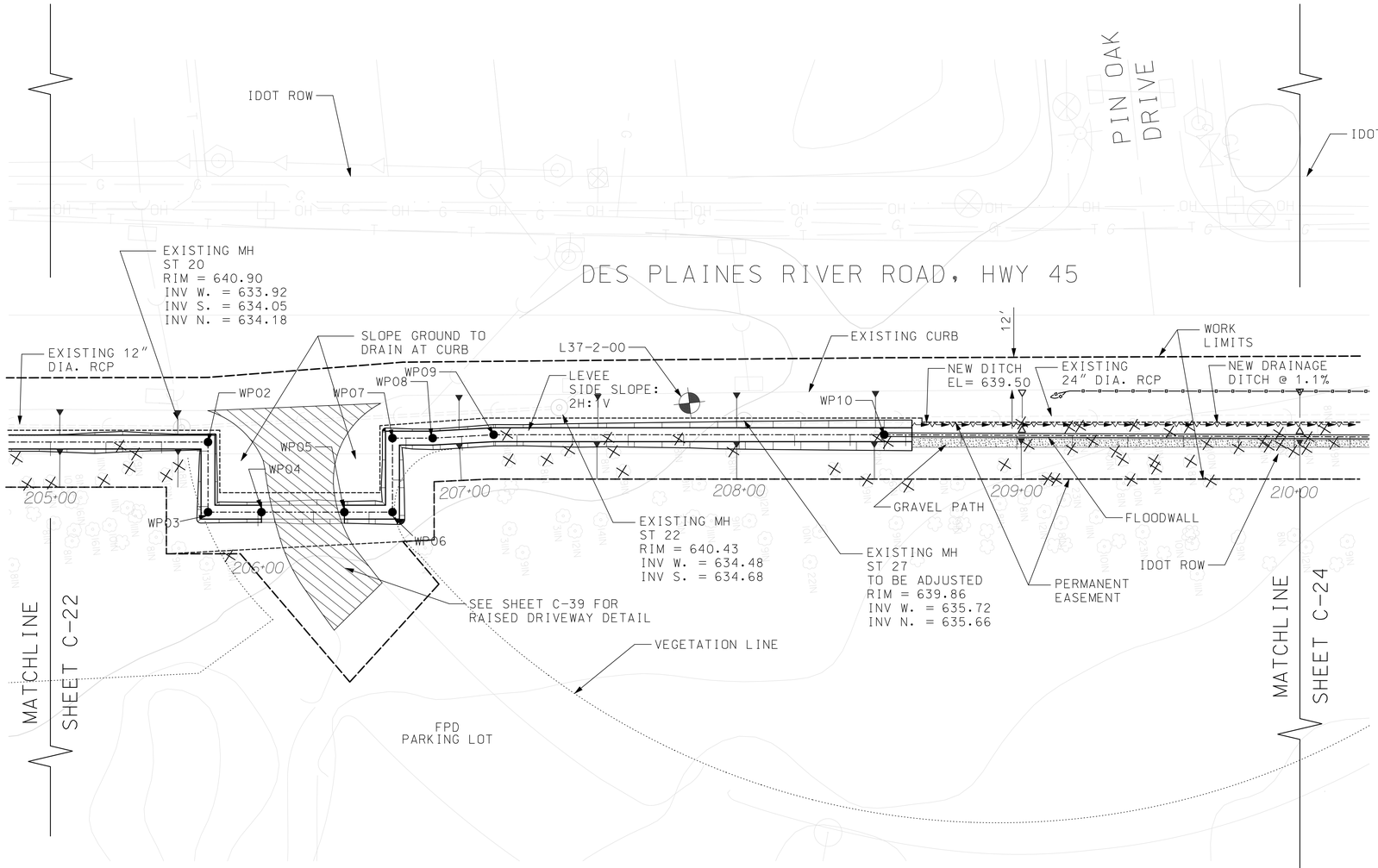

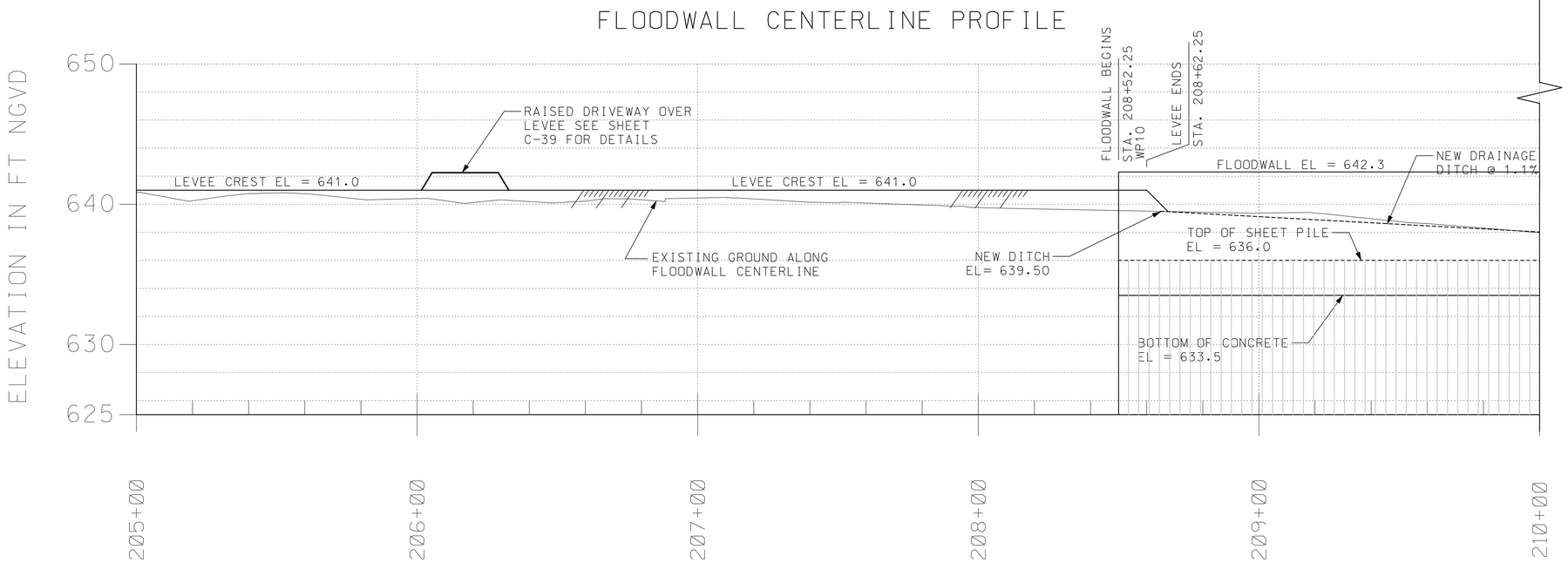

20 10 0 20 40
SCALE IN FEET

NOTES:

1. SEE SHEET G-03 FOR CONSTRUCTION NOTES.
2. REFER TO SHEET C-04 TO C-10 FOR UTILITY SURVEY. EXISTING UTILITIES NOT INDICATED TO BE REMOVED SHALL REMAIN IN PLACE AND PROTECTED DURING CONSTRUCTION.
3. REFER TO STRUCTURAL SHEET FOR STRUCTURES AND SHEET PILE DETAIL.
4. DES PLAINES RIVER ROAD AND MILWAUKEE ROAD FLOODWALL CENTERLINE STATIONING IS 202+00 TO 291+29.
5. CONTRACTOR SHALL ADEQUATELY PROTECT OPEN EXCAVATION FROM INTRUSION.
6. ROADWAY AND CURB/GUTTER, WITHIN THE WORKLIMITS, DAMAGE DUE TO CONSTRUCTION ACTIVITES SHALL BE RESTORED TO PRE-CONSTRUCTION GRADE AND CONDITIONS.
7. THE SHEET PILE WALL EXTENDS BELOW ELEV. 625. REFER TO SHEET S-01 TO S-04 FOR SHEET PILE BOTTOM ELEVATION.
8. ALL TREES WITHIN THE WORKLIMITS NOT DESIGNATED TO BE REMOVED SHALL BE PROTECTED IN ACCORDANCE TO SECTION 02931 TREE PROTECTION. SEE SHEET C-42 FOR TREE PROTECTION DETAILS.
9. SEE SHEET C-42 FOR GRAVEL PATH TYP. SECTION.
10. TREES WITHOUT DBH SHOWN OR LISTED ARE TREES LESS THAN 8 INCHES DBH.
11. PRIOR TO LEVEE PLACEMENT, THE CONTRACTOR SHALL STRIP EXISTING GRADE A MINIMUM OF 1.0'.

20 10 0 20 40
HORIZONTAL SCALE IN FEET

4 2 0 4 8
VERTICAL SCALE IN FEET

US Army Corps of Engineers
Chicago District

SYMBOL	AMENDMENT DESCRIPTION	DATE APPROVED	SYMBOL	DESCRIPTION	DATE APPROVED

DESIGNED BY: GA
DATE: 08-18-2008
DRAWN BY: GA
SCALE: AS SHOWN
CHECKED BY: JT
SOLICITATION NUMBER: W912P6-08-B-0003
SUBMITTED BY: JOHN GROBOSKI, P.E.
DATE: 08-18-08

U.S.ARMY ENGINEER DISTRICT
CORPS OF ENGINEERS
CHICAGO, ILLINOIS

DES PLAINES RIVER, ILLINOIS
LOCAL FLOOD PROTECTION
FLOODWALL 37
RIVER RD/MILWAUKEE AVE.
SITE PLAN AND PROFILE
STA. 205+00 TO 210+00

SHEET REFERENCE NUMBER:
C-23
SHEET 29 OF 131

PLOT DATE: 8/18/2008
FILENAME: levee37-sht23.dgn

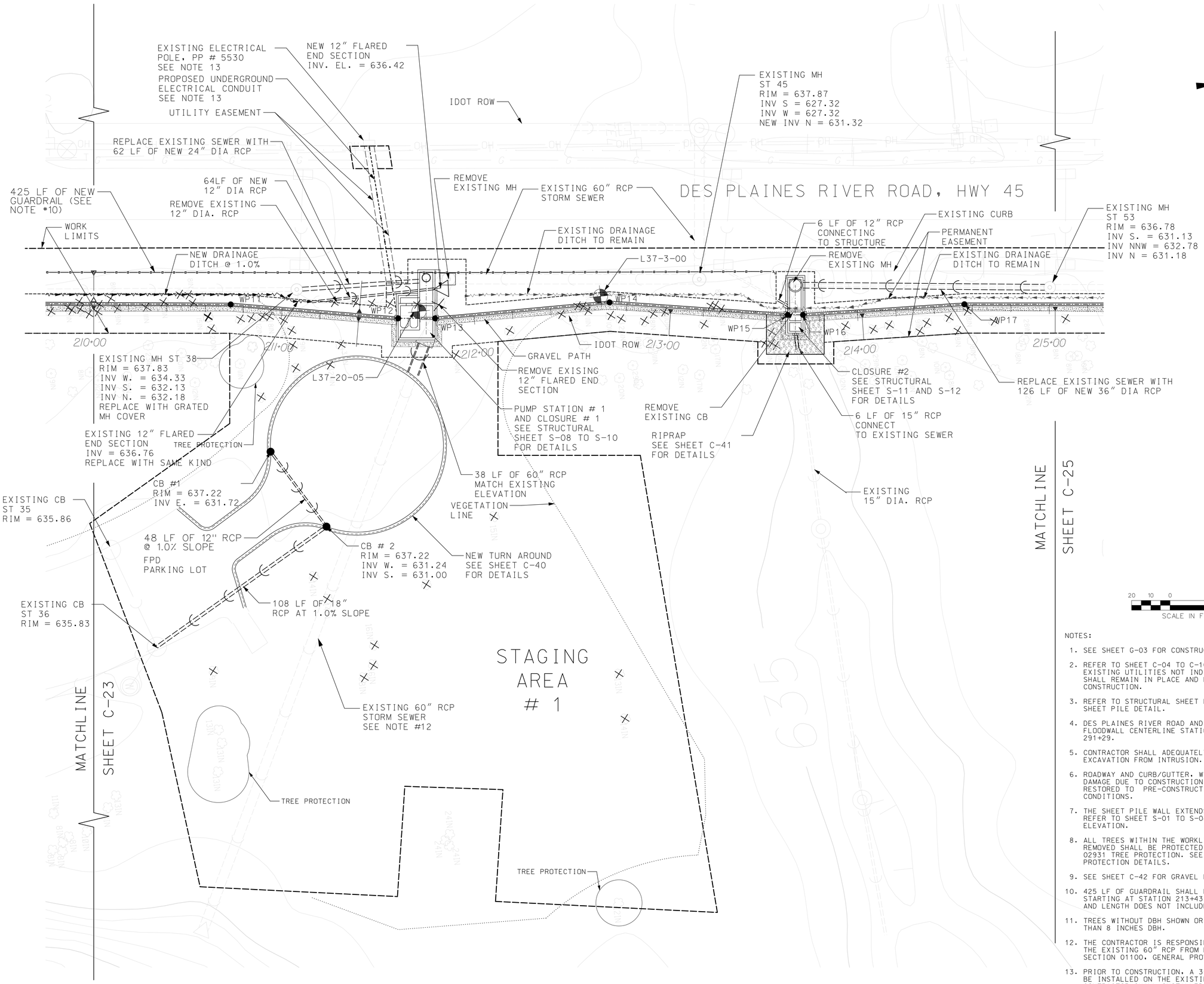

20 10 0 20 40
SCALE IN FEET

NOTES:

1. SEE SHEET G-03 FOR CONSTRUCTION NOTES.
2. REFER TO SHEET C-04 TO C-10 FOR UTILITY SURVEY. EXISTING UTILITIES NOT INDICATED TO BE REMOVED SHALL REMAIN IN PLACE AND PROTECTED DURING CONSTRUCTION.
3. REFER TO STRUCTURAL SHEET FOR STRUCTURES AND SHEET PILE DETAIL.
4. DES PLAINES RIVER ROAD AND MILWAUKEE ROAD FLOODWALL CENTERLINE STATIONING IS 202+00 TO 291+29.
5. CONTRACTOR SHALL ADEQUATELY PROTECT OPEN EXCAVATION FROM INTRUSION.
6. ROADWAY AND CURB/GUTTER, WITHIN THE WORKLIMITS, DAMAGE DUE TO CONSTRUCTION ACTIVITES SHALL BE RESTORED TO PRE-CONSTRUCTION GRADE AND CONDITIONS.
7. THE SHEET PILE WALL EXTENDS BELOW ELEV. 625. REFER TO SHEET S-01 TO S-04 FOR SHEET PILE BOTTOM ELEVATION.
8. ALL TREES WITHIN THE WORKLIMITS NOT DESIGNATED TO BE REMOVED SHALL BE PROTECTED IN ACCORDANCE TO SECTION 02931 TREE PROTECTION. SEE SHEET C-42 FOR TREE PROTECTION DETAILS.
9. SEE SHEET C-42 FOR GRAVEL PATH TYP. SECTION.
10. 425 LF OF GUARDRAIL SHALL BE INSTALLED ALONG THE CURB STARTING AT STATION 213+43.5. GUARDRAIL START STATION AND LENGTH DOES NOT INCLUDE END TERMINALS.
11. TREES WITHOUT DBH SHOWN OR LISTED ARE TREES LESS THAN 8 INCHES DBH.
12. THE CONTRACTOR IS RESPONSIBLE FOR PROTECTING THE EXISTING 60" RCP FROM DAMAGE IN ACCORDANCE TO SECTION 01100, GENERAL PROVISIONS.
13. PRIOR TO CONSTRUCTION, A 3-PHASE TRANSFORMER WILL BE INSTALLED ON THE EXISTING POLE BY COM-ED. THE CONTRACTOR SHALL INSTALLED THE UNDERGROUND CONDUIT IN ACCORDANCE TO THE ELECTRICAL PLAN SHEET E-01 AND SECTION 16415 OF THE SPECIFICATIONS.

US Army Corps of Engineers Chicago District

SYMBOL	AMENDMENT DESCRIPTION	DATE APPROVED	SYMBOL	DESCRIPTION	DATE APPROVED

DESIGNED BY: GA
DATE: 08-18-2008
DRAWN BY: GA
SCALE: AS SHOWN
CHECKED BY: JT
SOLICITATION NUMBER: W912P6-08-B-0003
SUBMITTED BY: JOHN GROBOSKI, P.E.
DATE: 08-18-08

U.S.ARMY ENGINEER DISTRICT
CORPS OF ENGINEERS
CHICAGO, ILLINOIS

DES PLAINES RIVER, ILLINOIS
LOCAL FLOOD PROTECTION
FLOODWALL 37
RIVER RD/MILWAUKEE AVE.
SITE PLAN
STA. 210+00 TO 215+00

SHEET REFERENCE NUMBER:
C-24
SHEET 30 OF 131

PLOT DATE: 8/18/2008
FILENAME: levee37-sht024.dgn

FLOODWALL CENTERLINE PROFILE

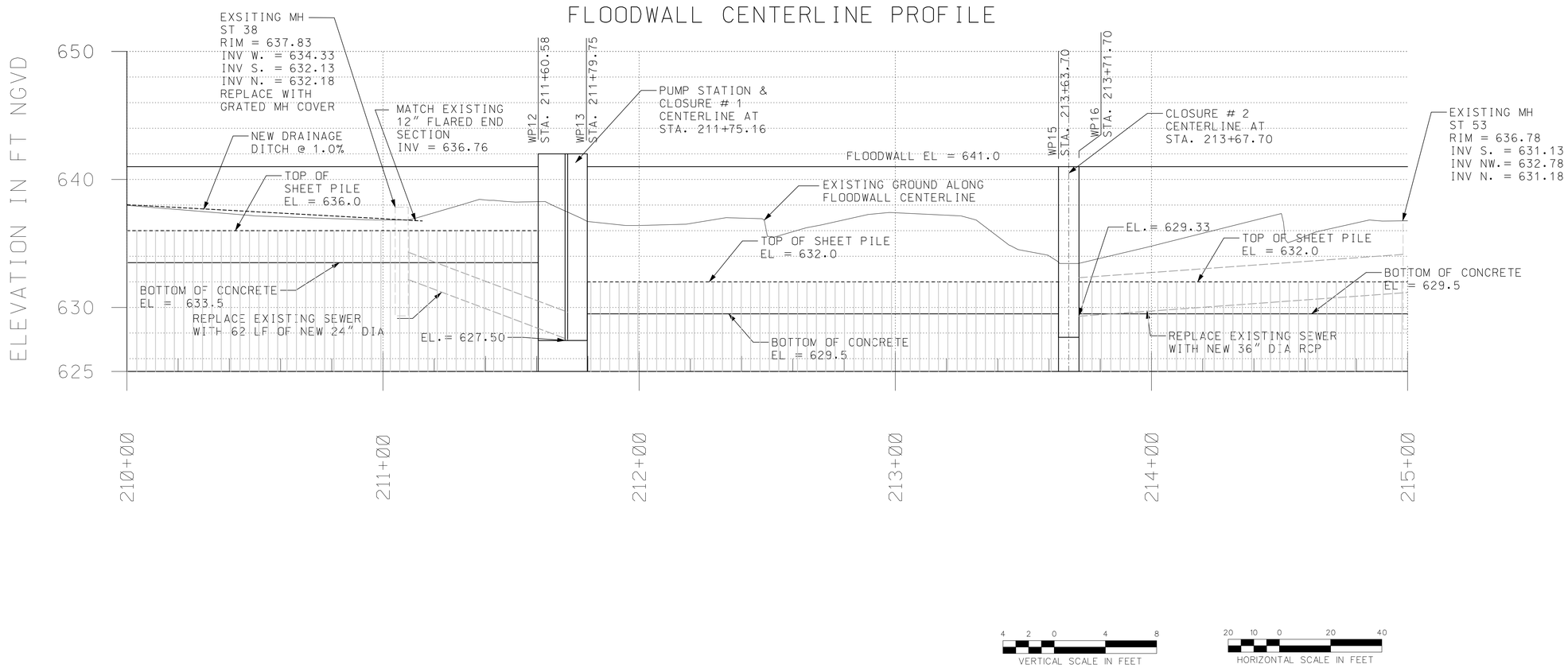

NOTES:

1. SEE SHEET G-03 FOR CONSTRUCTION NOTES.
2. REFER TO SHEET C-04 TO C-10 FOR UTILITY SURVEY. EXISTING UTILITIES NOT INDICATED TO BE REMOVED SHALL REMAIN IN PLACE AND PROTECTED DURING CONSTRUCTION.
3. REFER TO STRUCTURAL SHEET FOR STRUCTURES AND SHEET PILE DETAIL.
4. DES PLAINES RIVER ROAD AND MILWAUKEE ROAD FLOODWALL CENTERLINE STATIONING IS 202+00 TO 291+29.
5. ROADWAY AND CURB/GUTTER, WITHIN THE WORKLIMITS, DAMAGE DUE TO CONSTRUCTION ACTIVITES SHALL BE RESTORED TO PRE-CONSTRUCTION GRADE AND CONDITIONS.
6. THE SHEET PILE WALL EXTENDS BELOW ELEV. 625. REFER TO S-01 TO S-04 FOR SHEET PILE BOTTOM ELEVATION.

US Army Corps of Engineers
Chicago District

SYMBOL	AMENDMENT DESCRIPTION	DATE APPROVED	SYMBOL	DESCRIPTION	DATE APPROVED

DESIGNED BY: GA
DATE: 08-18-2008
DRAWN BY: GA
SCALE: AS SHOWN
CHECKED BY: JT
SOLICITATION NUMBER: W912P6-08-B-0003
SUBMITTED BY: JOHN GROBOSKI, P.E. 08-18-08
DATE:

U.S.ARMY ENGINEER DISTRICT
CORPS OF ENGINEERS
CHICAGO, ILLINOIS

DES PLAINES RIVER, ILLINOIS
LOCAL FLOOD PROTECTION
FLOODWALL 37
RIVER RD/MILWAUKEE AVE.
PROFILE
STA. 210+00 TO 215+00

SHEET REFERENCE NUMBER:
C-24A
SHEET 31 OF 131

PLOT DATE: 8/18/2008
FILENAME: levee37-sht024A.dgn

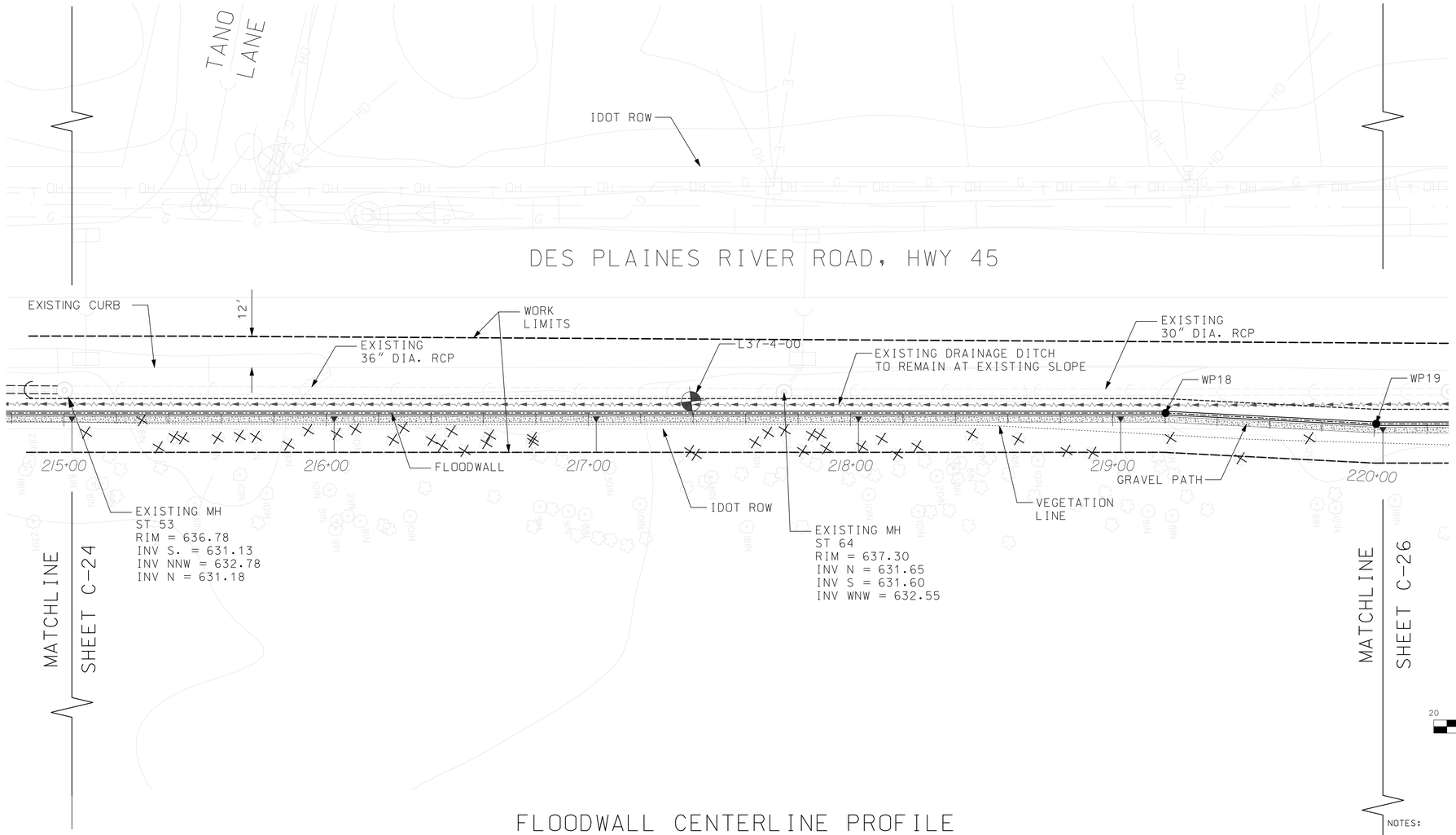

FLOODWALL CENTERLINE PROFILE

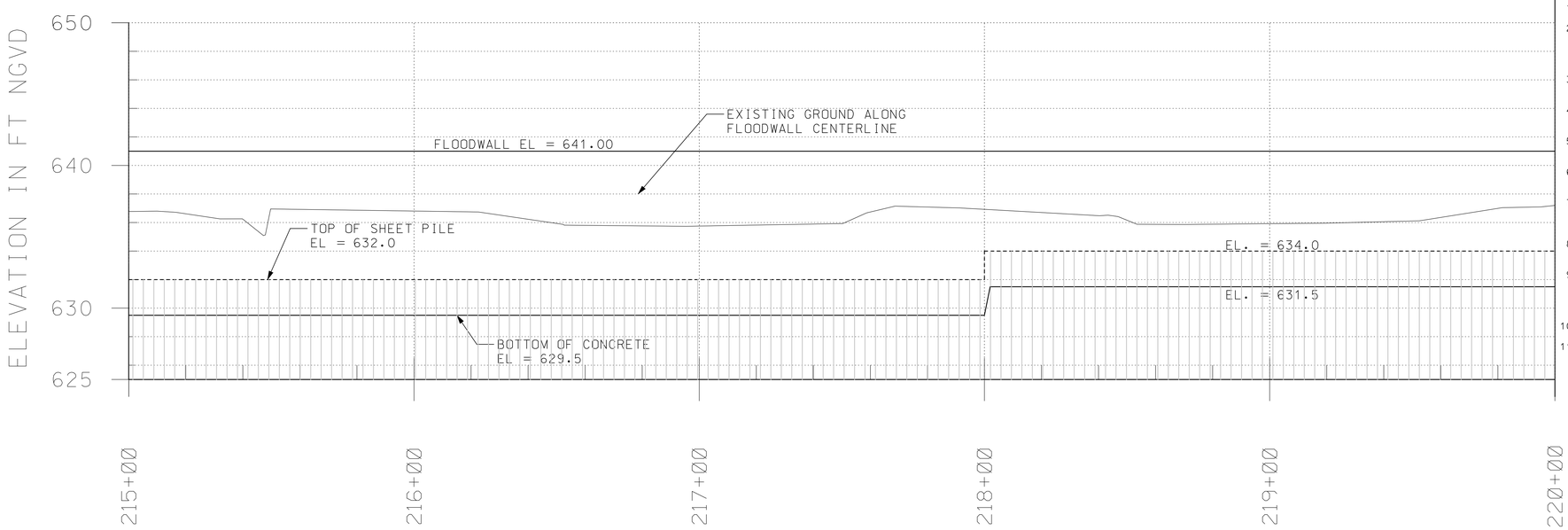

NOTES:

1. SEE SHEET G-03 FOR CONSTRUCTION NOTES.
2. REFER TO SHEET C-04 TO C-10 FOR UTILITY SURVEY. EXISTING UTILITIES NOT INDICATED TO BE REMOVED SHALL REMAIN IN PLACE AND PROTECTED DURING CONSTRUCTION.
3. TREES LESS THAN 8 INCHES IN DBH ARE NOT SHOWN ON THE PLANS.
4. REFER TO STRUCTURAL SHEET FOR STRUCTURES AND SHEET PILE DETAIL.
5. DES PLAINES RIVER ROAD AND MILWAUKEE ROAD FLOODWALL CENTERLINE STATIONING IS 202+00 TO 291+29.
6. CONTRACTOR SHALL ADEQUATELY PROTECT OPEN EXCAVATION FROM INTRUSION.
7. ROADWAY AND CURB/GUTTER, WITHIN THE WORKLIMITS, DAMAGE DUE TO CONSTRUCTION ACTIVITES SHALL BE RESTORED TO PRE-CONSTRUCTION GRADE AND CONDITIONS.
8. THE SHEET PILE WALL EXTENDS BELOW ELEV. 625. REFER TO SHEET S-02 TO S-05 FOR SHEET PILE BOTTOM ELEVATION.
9. ALL TREES WITHIN THE WORKLIMITS NOT DESIGNATED TO BE REMOVED SHALL BE PROTECTED IN ACCORDANCE TO SECTION 02931 TREE PROTECTION. SEE SHEET C-42 FOR TREE PROTECTION DETAILS.
10. SEE SHEET C-42 FOR GRAVEL PATH TYP. SECTION.
11. TREES WITHOUT DBH SHOWN OR LISTED ARE TREES LESS THAN 8 INCHES DBH.

US Army Corps of Engineers
Chicago District

SYMBOL	AMENDMENT DESCRIPTION	DATE APPROVED	SYMBOL	DESCRIPTION	DATE APPROVED

DESIGNED BY: GA | DATE: 08-18-2008
DRAWN BY: GA | SCALE: AS SHOWN
CHECKED BY: JT | SOLICITATION NUMBER: W912P6-08-B-0003
SUBMITTED BY: JOHN GROBOSKI, P.E. 08-18-08 | DATE:

U.S.ARMY ENGINEER DISTRICT
CORPS OF ENGINEERS
CHICAGO, ILLINOIS

DES PLAINES RIVER, ILLINOIS
LOCAL FLOOD PROTECTION
FLOODWALL 37
RIVER RD/MILWAUKEE AVE.

SITE PLAN AND PROFILE
STA. 215+00 TO 220+00

SHEET REFERENCE NUMBER:
C-25

PLOT DATE: 8/18/2008
FILENAME: lrwa37-sht025.dgn

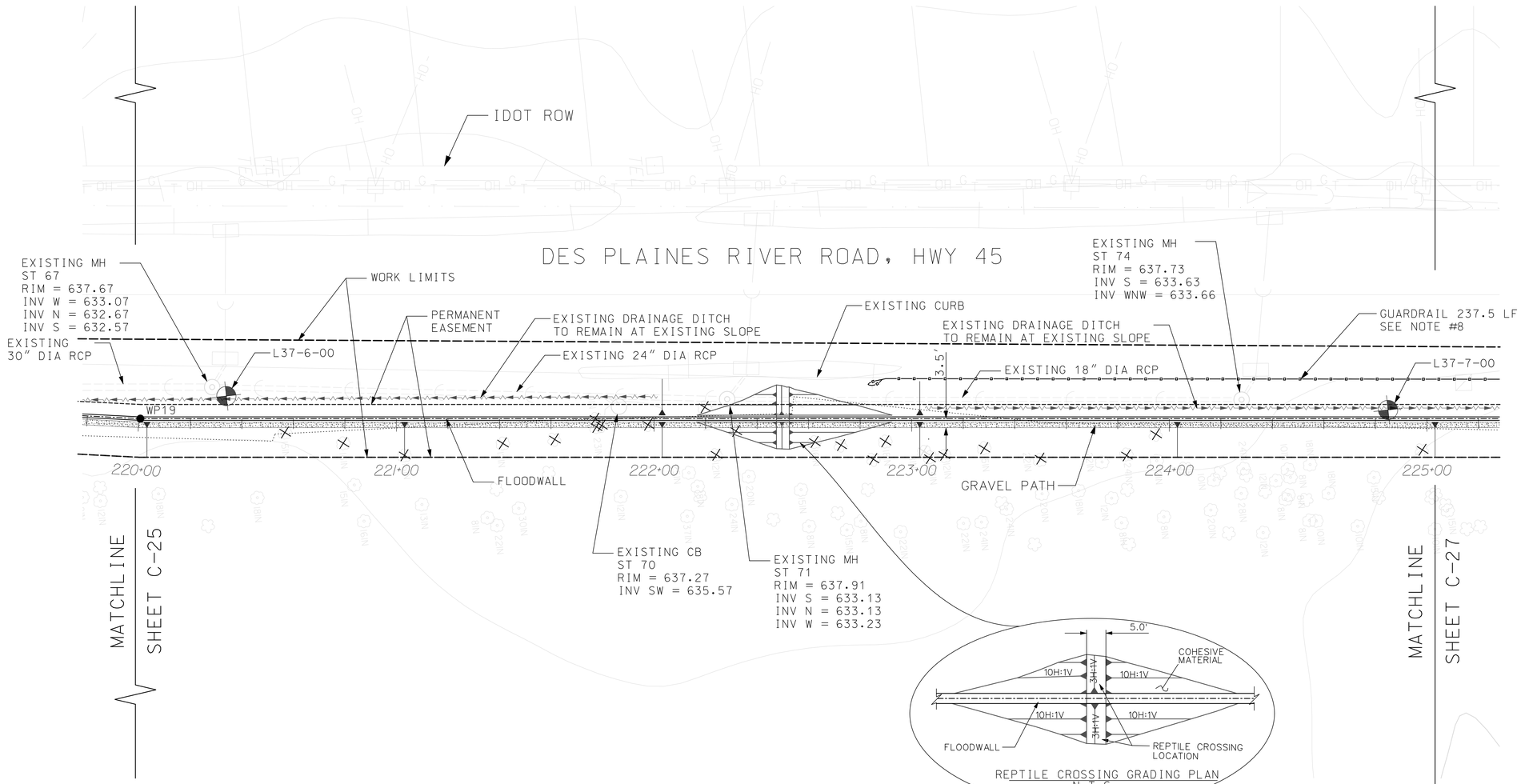

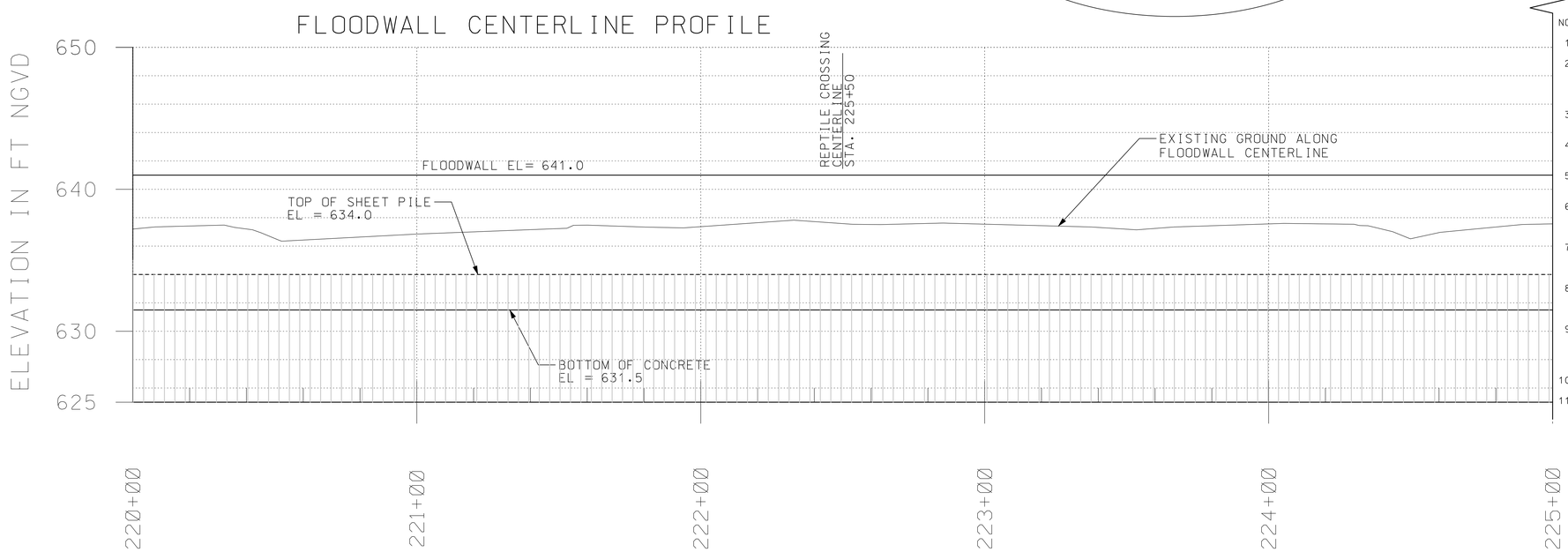

NOTES:

1. SEE SHEET G-03 FOR CONSTRUCTION NOTES.
2. REFER TO SHEET C-04 TO C-10 FOR UTILITY SURVEY. EXISTING UTILITIES NOT INDICATED TO BE REMOVED SHALL REMAIN IN PLACE AND PROTECTED DURING CONSTRUCTION.
3. REFER TO STRUCTURAL SHEET FOR STRUCTURES AND SHEET PILE DETAIL.
4. DES PLAINES RIVER ROAD AND MILWAUKEE ROAD FLOODWALL CENTERLINE STATIONING IS 202+00 TO 291+21.
5. CONTRACTOR SHALL ADEQUATELY PROTECT OPEN EXCAVATION FROM INTRUSION.
6. ROADWAY AND CURB/GUTTER. WITHIN THE WORKLIMITS. DAMAGE DUE TO CONSTRUCTION ACTIVITES SHALL BE RESTORED TO PRE-CONSTRUCTION GRADE AND CONDITIONS.
7. THE SHEET PILE WALL EXTENDS BELOW ELEV. 625. REFER TO STRUCTURAL SHEET S-01 TO S-04 FOR SHEET PILE BOTTOM ELEVATION.
8. 237.5 LF OF GUARDRAIL SHALL BE INSTALLED ALONG THE CURB STARTING AT STATION 225+27.4. GUARDRAIL START STATION AND LENGTH DOES NOT INCLUDE END TERMINALS.
9. ALL TREES WITHIN THE WORKLIMITS NOT DESIGNATED TO BE REMOVED SHALL BE PROTECTED IN ACCORDANCE TO SECTION 02931 TREE PROTECTION. SEE SHEET C-42 FOR TREE PROTECTION DETAILS.
10. SEE SHEET C-42 FOR GRAVEL PATH TYP. SECTION.
11. TREES WITHOUT DBH SHOWN OR LISTED ARE TREES LESS THAN 8 INCHES DBH.

US Army Corps of Engineers
Chicago District

SYMBOL	AMENDMENT DESCRIPTION	DATE APPROVED	SYMBOL	DESCRIPTION	DATE APPROVED

DESIGNED BY: GA
DATE: 08-18-2008
DRAWN BY: GA
SCALE: AS SHOWN
CHECKED BY: JT
SOLICITATION NUMBER: W912P6-08-B-0003
SUBMITTED BY: JOHN GROBOSKI, P.E.
DATE: 08-18-08

U.S.ARMY ENGINEER DISTRICT
CORPS OF ENGINEERS
CHICAGO, ILLINOIS

DES PLAINES RIVER, ILLINOIS
LOCAL FLOOD PROTECTION
FLOODWALL 37
RIVER RD/MILWAUKEE AVE.
SITE PLAN AND PROFILE
STA. 220+00 TO 225+00

SHEET REFERENCE NUMBER:
C-26
SHEET 33 OF 131

PLOT DATE: 8/18/2008
FILENAME: levee37-sht026.dgn

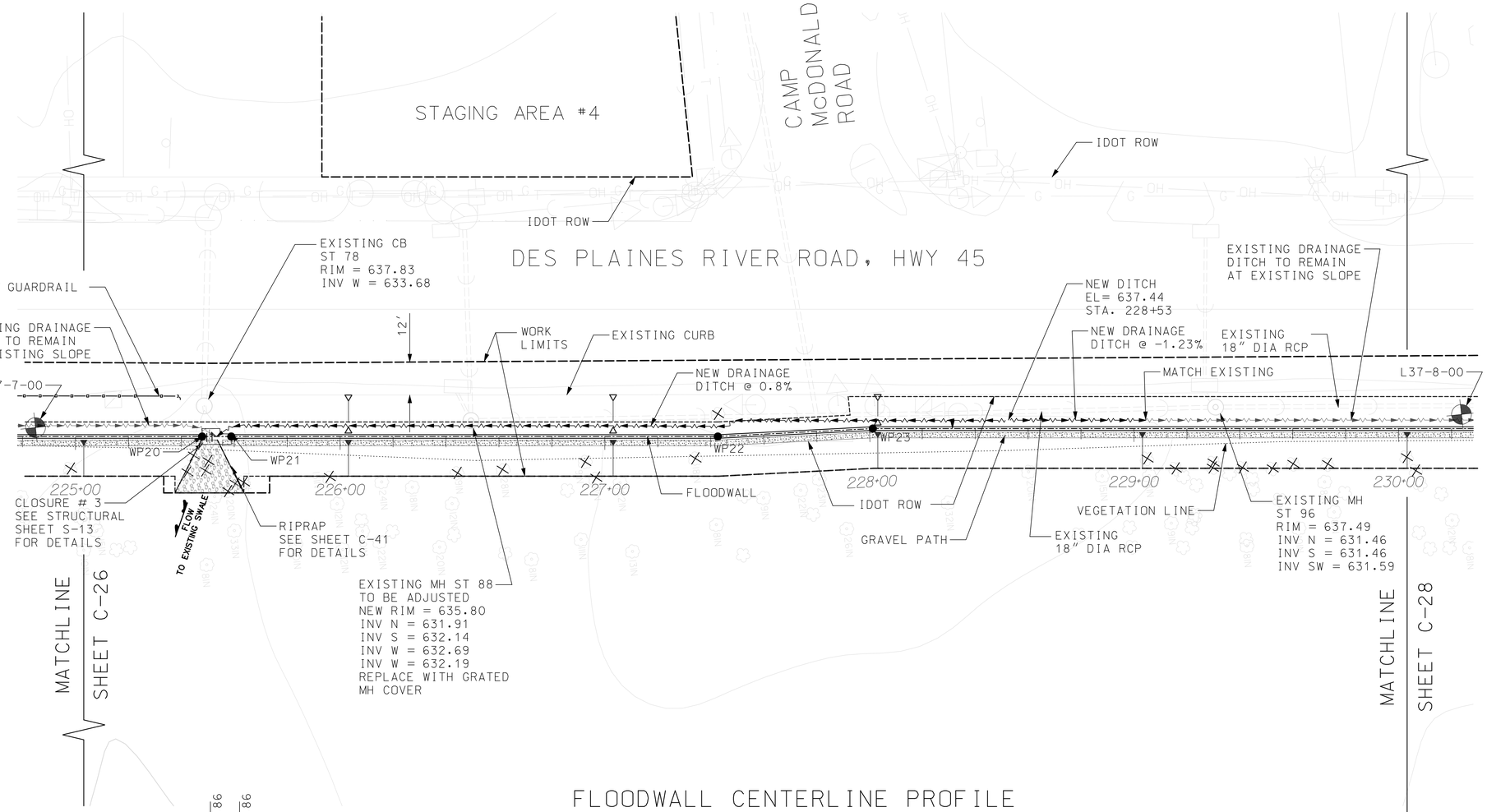

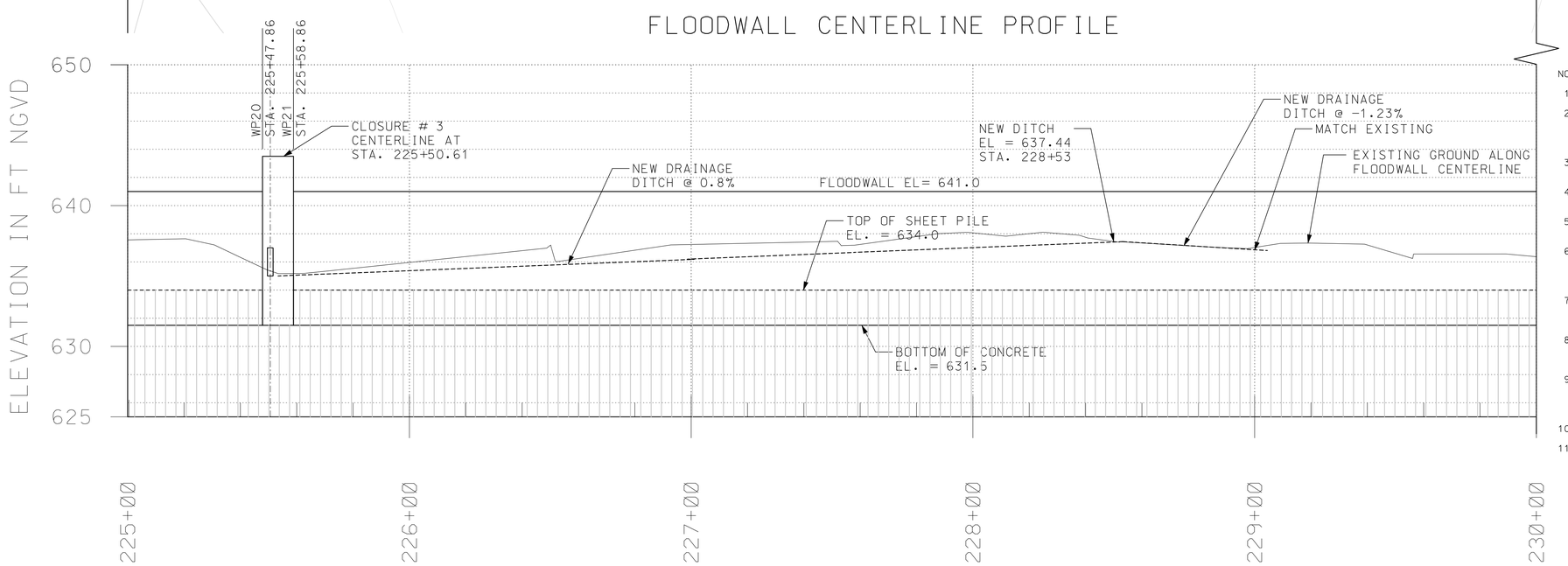

NOTES:

1. SEE SHEET G-03 FOR CONSTRUCTION NOTES.
2. REFER TO SHEET C-04 TO C-10 FOR UTILITY SURVEY. EXISTING UTILITIES NOT INDICATED TO BE REMOVED SHALL REMAIN IN PLACE AND PROTECTED DURING CONSTRUCTION.
3. REFER TO STRUCTURAL SHEET FOR STRUCTURES AND SHEET PILE DETAIL.
4. DES PLAINES RIVER ROAD AND MILWAUKEE ROAD FLOODWALL CENTERLINE STATIONING IS 202+00 TO 291+29.
5. CONTRACTOR SHALL ADEQUATELY PROTECT OPEN EXCAVATION FROM INTRUSION.
6. ROADWAY AND CURB/GUTTER. WITHIN THE WORKLIMITS. DAMAGE DUE TO CONSTRUCTION ACTIVITES SHALL BE RESTORED TO PRE-CONSTRUCTION GRADE AND CONDITIONS.
7. THE SHEET PILE WALL EXTENDS BELOW ELEV. 625. REFER TO STRUCTURAL SHEET S-01 TO S-04 FOR SHEET PILE BOTTOM ELEVATION.
8. 237.5 LF OF GUARDRAIL SHALL BE INSTALLED ALONG THE CURB STARTING AT STATION 225+27.4. GUARDRAIL START STATION AND LENGTH DOES NOT INCLUDE END TERMINALS.
9. ALL TREES WITHIN THE WORKLIMITS NOT DESIGNATED TO BE REMOVED SHALL BE PROTECTED IN ACCORDANCE TO SECTION 02931 TREE PROTECTION. SEE SHEET C-42 FOR TREE PROTECTION DETAILS.
10. SEE SHEET C-42 FOR GRAVEL PATH TYP. SECTION.
11. TREES WITHOUT DBH SHOWN AND LISTED ARE TREES LESS THAN 8 INCHES DBH.

20 10 0 20 40
SCALE IN FEET

20 10 0 20 40
HORIZONTAL SCALE IN FEET

4 2 0 4 8
VERTICAL SCALE IN FEET

US Army Corps of Engineers
Chicago District

SYMBOL	AMENDMENT DESCRIPTION	DATE APPROVED	SYMBOL	DESCRIPTION	DATE APPROVED

DESIGNED BY: GA
DRAWN BY: GA
CHECKED BY: JT
DATE: 08-18-2008
SCALE: AS SHOWN
SOLICITATION NUMBER: W912P6-08-B-0003
JOHN GROBOSKI, P.E. 08-18-08
SUBMITTED BY:
DATE:

U.S.ARMY ENGINEER DISTRICT
CORPS OF ENGINEERS
CHICAGO, ILLINOIS

DES PLAINES RIVER, ILLINOIS
LOCAL FLOOD PROTECTION
FLOODWALL 37
RIVER RD/MILWAUKEE AVE.

SITE PLAN AND PROFILE
STA. 225+00 TO 230+00

SHEET REFERENCE NUMBER:
C-27
SHEET 34 OF 131

PLOT DATE: 8/18/2008
FILENAME: levee37-sht027.dgn

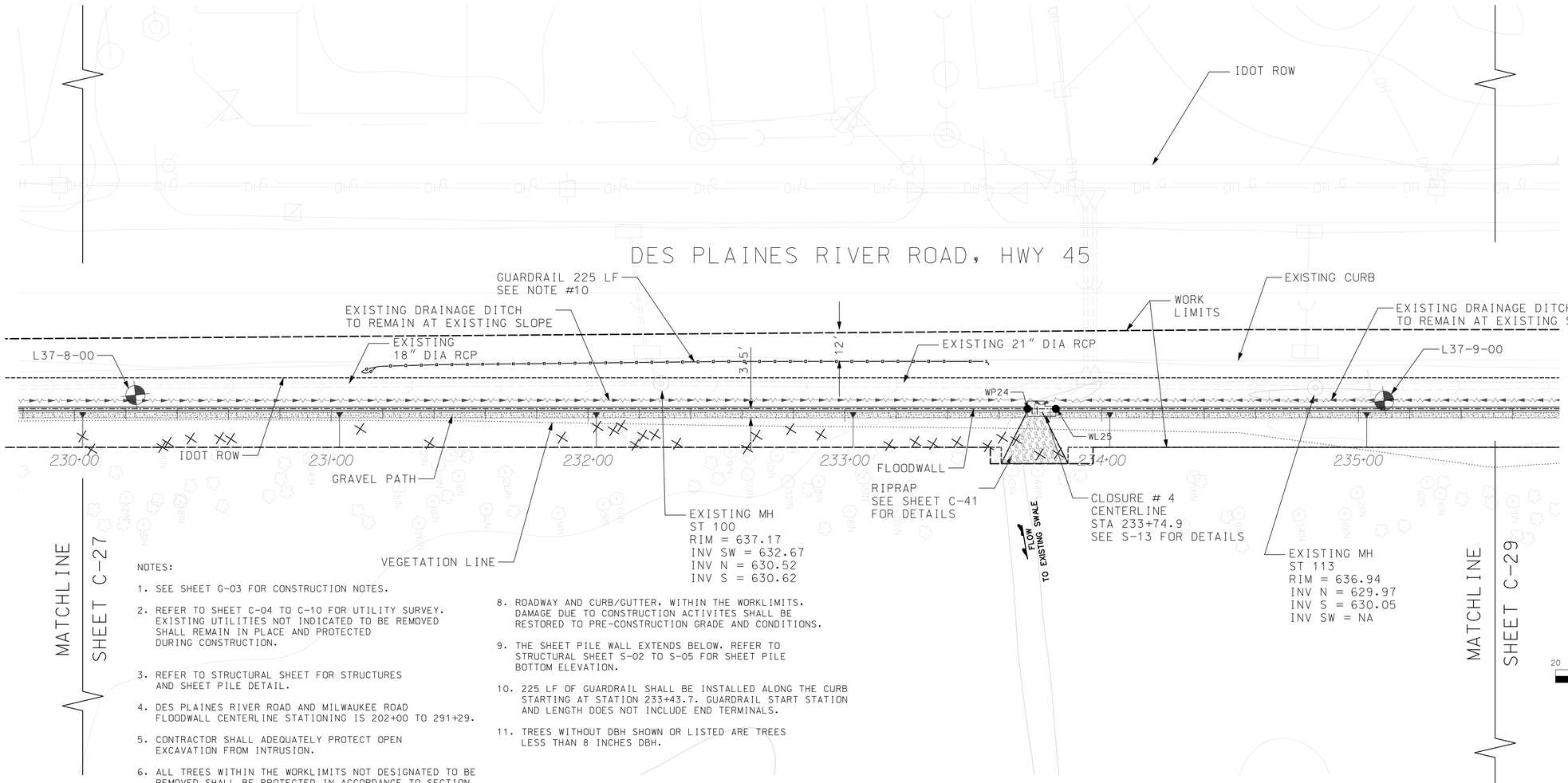

NOTES:

1. SEE SHEET G-03 FOR CONSTRUCTION NOTES.
2. REFER TO SHEET C-04 TO C-10 FOR UTILITY SURVEY. EXISTING UTILITIES NOT INDICATED TO BE REMOVED SHALL REMAIN IN PLACE AND PROTECTED DURING CONSTRUCTION.
3. REFER TO STRUCTURAL SHEET FOR STRUCTURES AND SHEET PILE DETAIL.
4. DES PLAINES RIVER ROAD AND MILWAUKEE ROAD FLOODWALL CENTERLINE STATIONING IS 202+00 TO 291+29.
5. CONTRACTOR SHALL ADEQUATELY PROTECT OPEN EXCAVATION FROM INTRUSION.
6. ALL TREES WITHIN THE WORKLIMITS NOT DESIGNATED TO BE REMOVED SHALL BE PROTECTED IN ACCORDANCE TO SECTION 02931 TREE PROTECTION. SEE SHEET C-42 FOR TREE PROTECTION DETAILS.
7. SEE SHEET C-42 FOR GRAVEL PATH TYP. SECTION.
8. ROADWAY AND CURB/GUTTER, WITHIN THE WORKLIMITS, DAMAGE DUE TO CONSTRUCTION ACTIVITES SHALL BE RESTORED TO PRE-CONSTRUCTION GRADE AND CONDITIONS.
9. THE SHEET PILE WALL EXTENDS BELOW. REFER TO STRUCTURAL SHEET S-02 TO S-05 FOR SHEET PILE BOTTOM ELEVATION.
10. 225 LF OF GUARDRAIL SHALL BE INSTALLED ALONG THE CURB STARTING AT STATION 233+43.7. GUARDRAIL START STATION AND LENGTH DOES NOT INCLUDE END TERMINALS.
11. TREES WITHOUT DBH SHOWN OR LISTED ARE TREES LESS THAN 8 INCHES DBH.

20 10 0 20 40
SCALE IN FEET

FLOODWALL CENTERLINE PROFILE

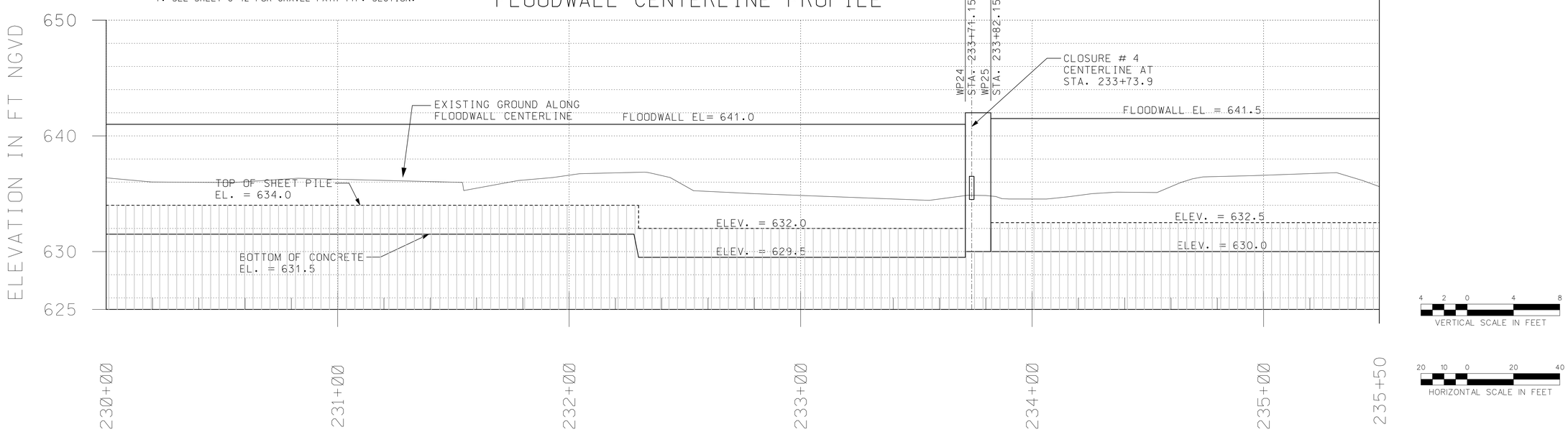

4 2 0 4 8
VERTICAL SCALE IN FEET

20 10 0 20 40
HORIZONTAL SCALE IN FEET

US Army Corps of Engineers Chicago District

SYMBOL	AMENDMENT DESCRIPTION	DATE	APPROVED	SYMBOL	DESCRIPTION	DATE	APPROVED

DESIGNED BY: GA
DATE: 08-18-2008
DRAWN BY: GA
SCALE: AS SHOWN
CHECKED BY: JT
SOLICITATION NUMBER: W912P6-08-B-0003
JOHN GROBOSKI, P.E. 08-18-08
SUBMITTED BY:
DATE:

U.S.ARMY ENGINEER DISTRICT
CORPS OF ENGINEERS
CHICAGO, ILLINOIS

DES PLAINES RIVER, ILLINOIS
LOCAL FLOOD PROTECTION
FLOODWALL 37
RIVER RD/MILWAUKEE AVE.

SITE PLAN AND PROFILE
STA. 230+00 TO 235+50

SHEET REFERENCE NUMBER:
C-28

SHEET 35 OF 131

PLOT DATE: 8/18/2008
FILENAME: levee37-sht C28.dgn

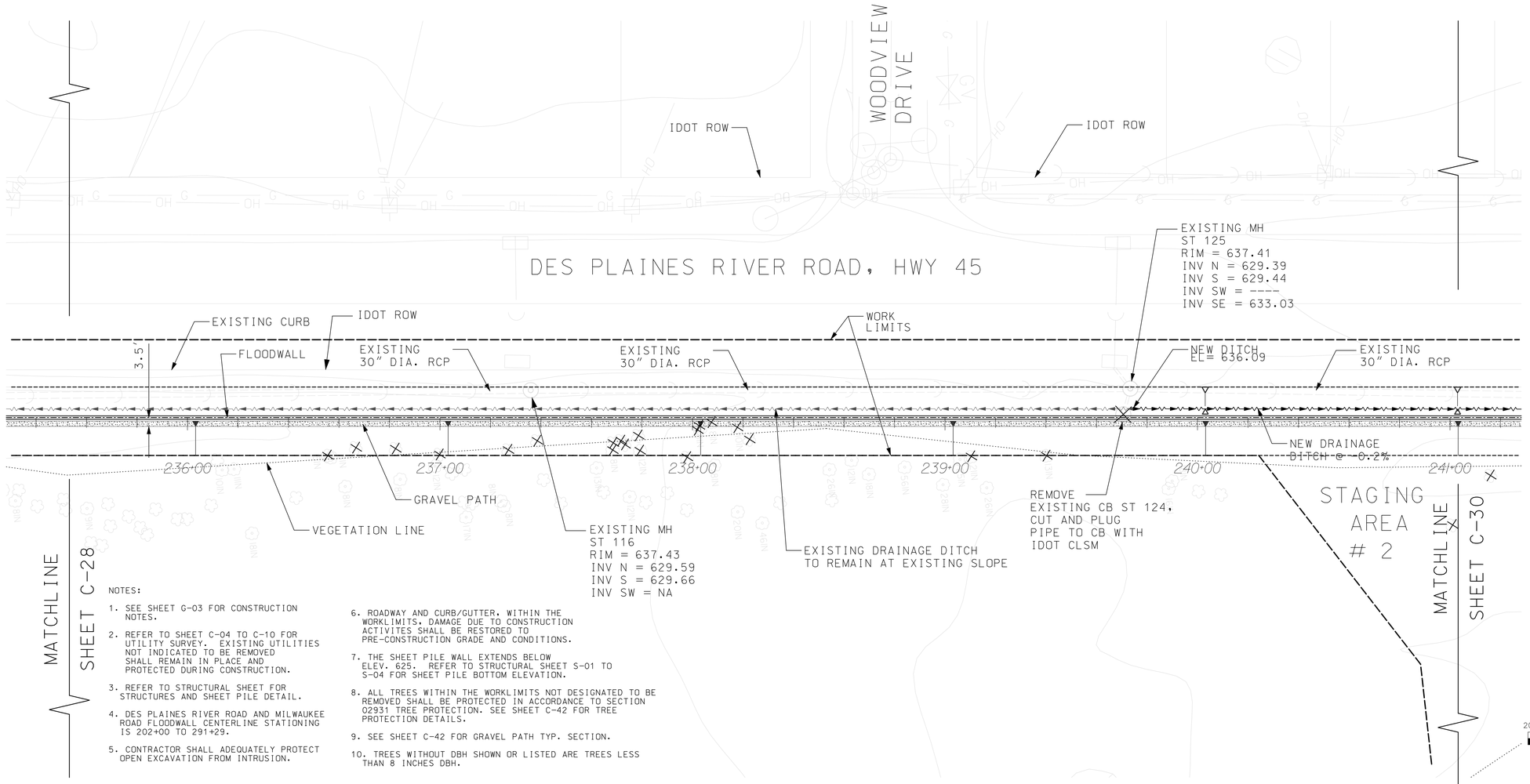

NOTES:

1. SEE SHEET G-03 FOR CONSTRUCTION NOTES.
2. REFER TO SHEET C-04 TO C-10 FOR UTILITY SURVEY. EXISTING UTILITIES NOT INDICATED TO BE REMOVED SHALL REMAIN IN PLACE AND PROTECTED DURING CONSTRUCTION.
3. REFER TO STRUCTURAL SHEET FOR STRUCTURES AND SHEET PILE DETAIL.
4. DES PLAINES RIVER ROAD AND MILWAUKEE ROAD FLOODWALL CENTERLINE STATIONING IS 202+00 TO 291+29.
5. CONTRACTOR SHALL ADEQUATELY PROTECT OPEN EXCAVATION FROM INTRUSION.
6. ROADWAY AND CURB/GUTTER, WITHIN THE WORKLIMITS, DAMAGE DUE TO CONSTRUCTION ACTIVITES SHALL BE RESTORED TO PRE-CONSTRUCTION GRADE AND CONDITIONS.
7. THE SHEET PILE WALL EXTENDS BELOW ELEV. 625. REFER TO STRUCTURAL SHEET S-01 TO S-04 FOR SHEET PILE BOTTOM ELEVATION.
8. ALL TREES WITHIN THE WORKLIMITS NOT DESIGNATED TO BE REMOVED SHALL BE PROTECTED IN ACCORDANCE TO SECTION 02931 TREE PROTECTION. SEE SHEET C-42 FOR TREE PROTECTION DETAILS.
9. SEE SHEET C-42 FOR GRAVEL PATH TYP. SECTION.
10. TREES WITHOUT DBH SHOWN OR LISTED ARE TREES LESS THAN 8 INCHES DBH.

FLOODWALL CENTERLINE PROFILE

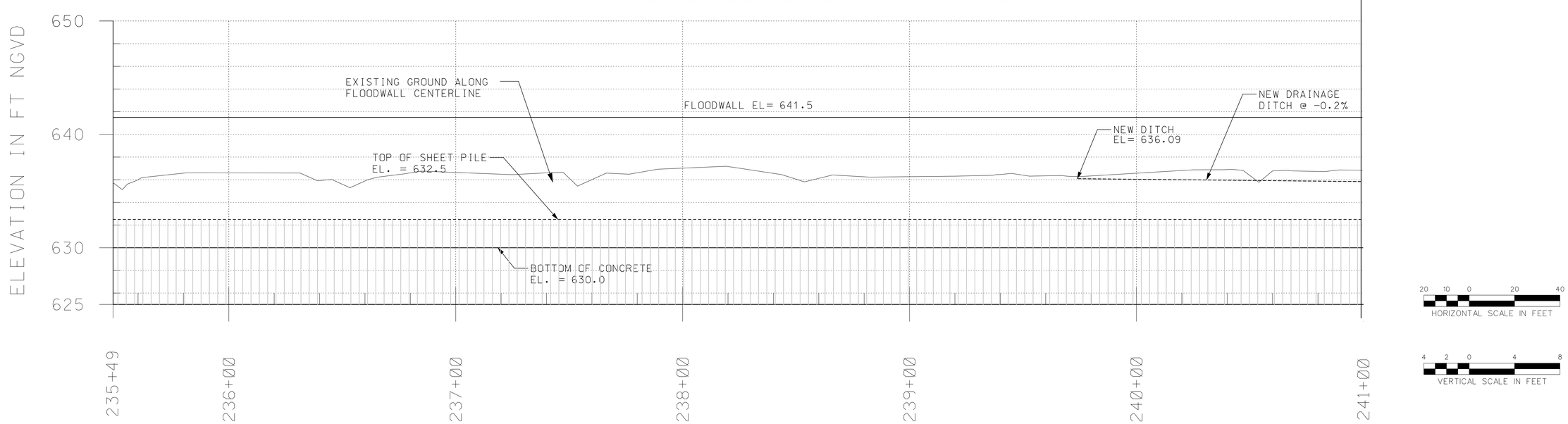

US Army Corps of Engineers
Chicago District

SYMBOL	AMENDMENT DESCRIPTION	DATE APPROVED	SYMBOL	DESCRIPTION	DATE APPROVED

DESIGNED BY: GA
DATE: 08-18-2008
DRAWN BY: GA
SCALE: AS SHOWN
CHECKED BY: JT
SOLICITATION NUMBER: W912P6-08-B-0003
SUBMITTED BY: JOHN GROBOSKI, P.E.
DATE: 08-18-08

U.S.ARMY ENGINEER DISTRICT
CORPS OF ENGINEERS
CHICAGO, ILLINOIS

DES PLAINES RIVER, ILLINOIS
LOCAL FLOOD PROTECTION
FLOODWALL 37
RIVER RD/MILWAUKEE AVE.

SITE PLAN AND PROFILE
STA. 235+50 TO 241+00

SHEET REFERENCE NUMBER:
C-29
SHEET 36 OF 131

PLOT DATE: 8/18/2008
FILENAME: levee37-sht029.dgn

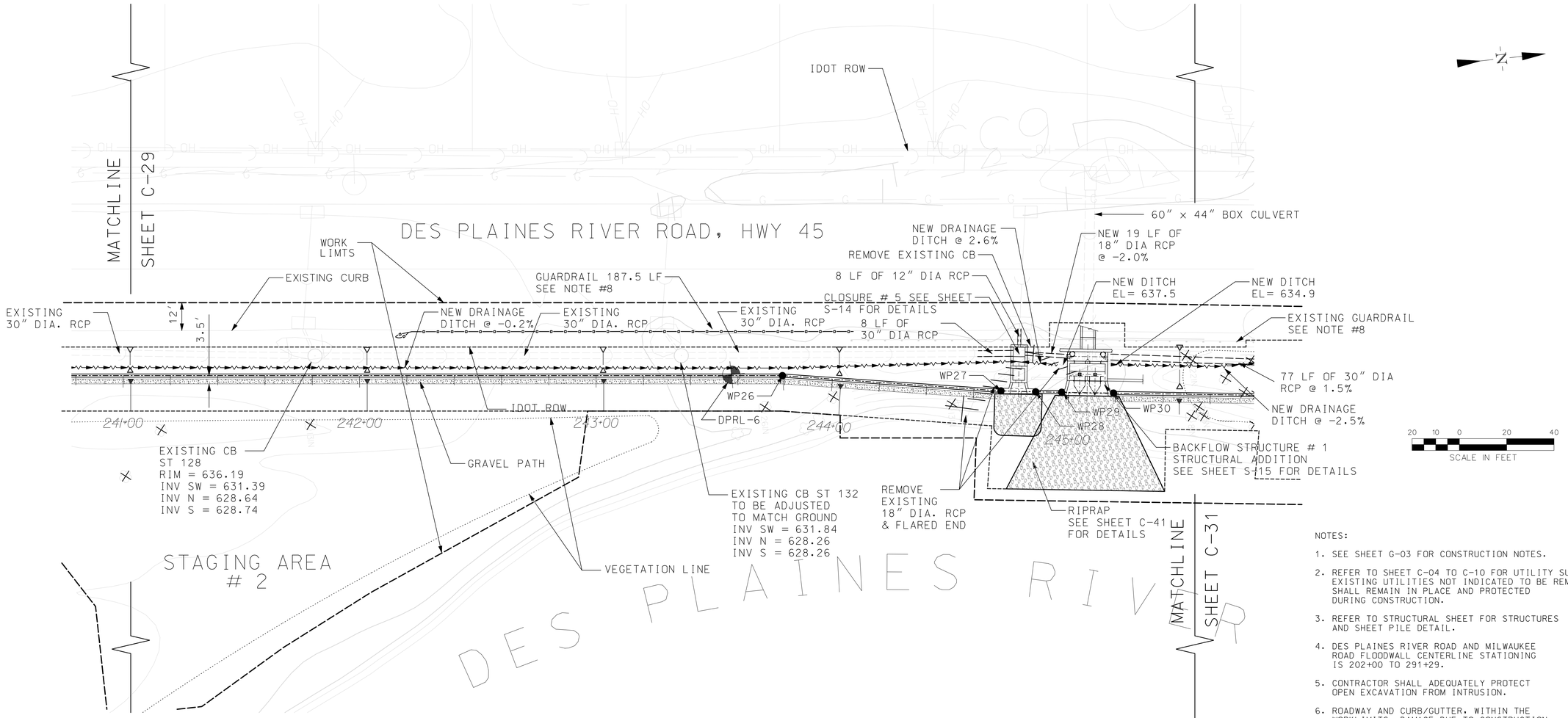

NOTES:

1. SEE SHEET G-03 FOR CONSTRUCTION NOTES.
2. REFER TO SHEET C-04 TO C-10 FOR UTILITY SURVEY. EXISTING UTILITIES NOT INDICATED TO BE REMOVED SHALL REMAIN IN PLACE AND PROTECTED DURING CONSTRUCTION.
3. REFER TO STRUCTURAL SHEET FOR STRUCTURES AND SHEET PILE DETAIL.
4. DES PLAINES RIVER ROAD AND MILWAUKEE ROAD FLOODWALL CENTERLINE STATIONING IS 202+00 TO 291+29.
5. CONTRACTOR SHALL ADEQUATELY PROTECT OPEN EXCAVATION FROM INTRUSION.
6. ROADWAY AND CURB/GUTTER, WITHIN THE WORKLIMITS, DAMAGE DUE TO CONSTRUCTION ACTIVITES SHALL BE RESTORED TO PRE-CONSTRUCTION GRADE AND CONDITIONS.
7. THE SHEET PILE WALL EXTENDS BELOW ELEV. 625. REFER TO STRUCTURAL SHEET S-01 TO S-04 FOR SHEET PILE BOTTOM ELEVATION.
8. THE EXISTING GUARDRAIL SHALL BE REMOVED AND RELOCATED ALONG THE CURB STARTING AT STA. 247+76.6. 187.5 LF OF NEW GUARDRAIL SHALL BE CONNECTED TO THE END OF THE EXISTING GUARDRAIL. REFER TO SHEET C-42 FOR GUARDRAIL DETAILS.
9. ALL TREES WITHIN THE WORKLIMITS NOT DESIGNATED TO BE REMOVED SHALL BE PROTECTED IN ACCORDANCE TO SECTION 02931 TREE PROTECTION. SEE SHEET C-42 FOR TREE PROTECTION DETAILS.
10. SEE SHEET C-42 FOR GRAVEL PATH TYP. SECTION.
11. TREES WITHOUT DBH SHOWN OR LISTED ARE TREES LESS THAN 8 INCHES DBH.

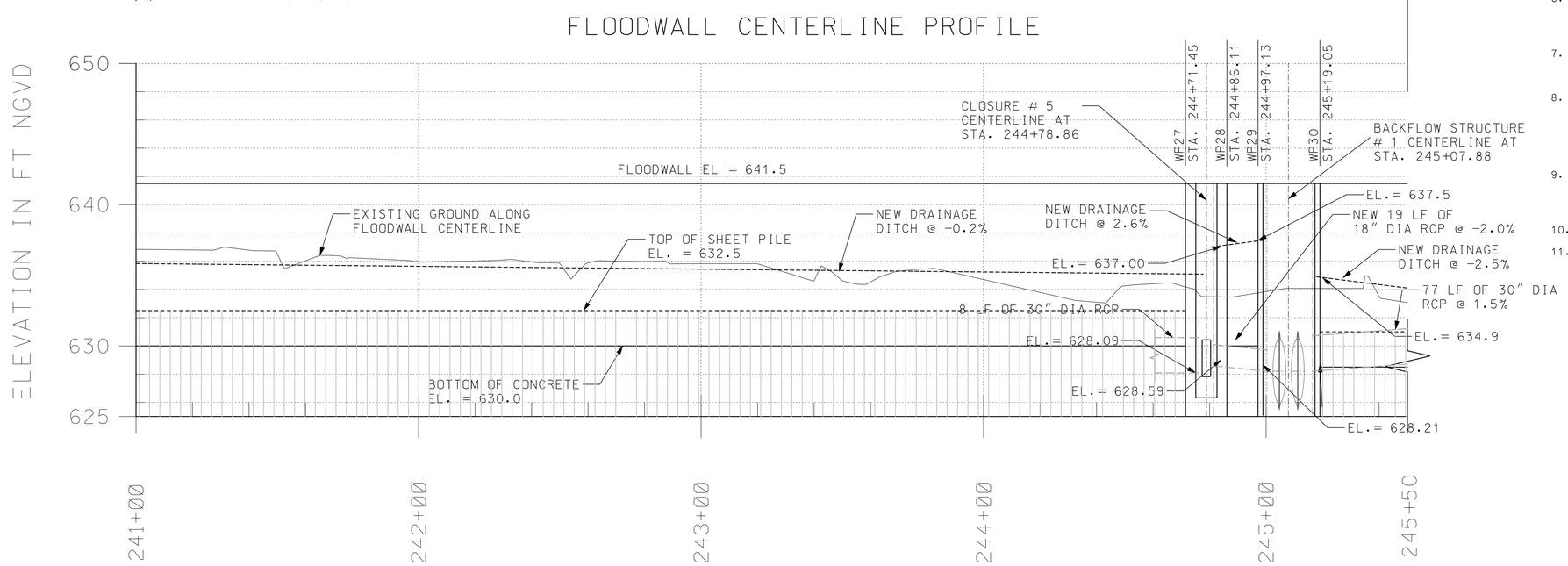

20 10 0 20 40
HORIZONTAL SCALE IN FEET

4 2 0 4 8
VERTICAL SCALE IN FEET

US Army Corps of Engineers
Chicago District

SYMBOL	AMENDMENT DESCRIPTION	DATE APPROVED	SYMBOL	DESCRIPTION	DATE APPROVED

DESIGNED BY: GA | DATE: 08-18-2008
DRAWN BY: GA | SCALE: AS SHOWN
CHECKED BY: JT | SOLICITATION NUMBER: W912P6-08-B-0003
SUBMITTED BY: JOHN GROBOSKI, P.E. | DATE: 08-18-08

U.S.ARMY ENGINEER DISTRICT
CORPS OF ENGINEERS
CHICAGO, ILLINOIS

DES PLAINES RIVER, ILLINOIS
LOCAL FLOOD PROTECTION
FLOODWALL 37
RIVER RD/MILWAUKEE AVE.
SITE PLAN AND PROFILE
STA. 241+00 TO 245+50

SHEET REFERENCE NUMBER:
C-30
SHEET 37 OF 131

PLOT DATE: 8/18/2008
FILENAME: lrwe37-sht030.dgn

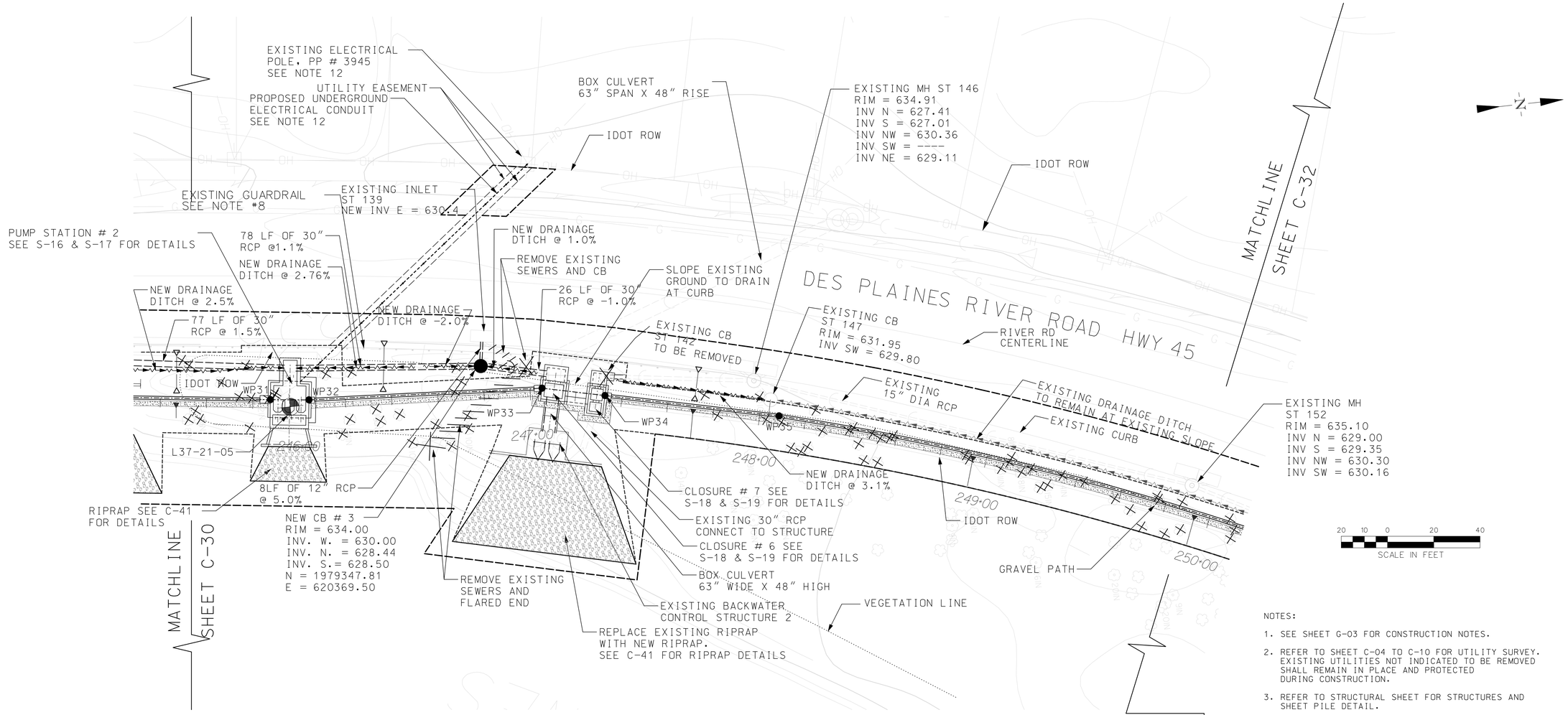

NOTES:

1. SEE SHEET G-03 FOR CONSTRUCTION NOTES.
2. REFER TO SHEET C-04 TO C-10 FOR UTILITY SURVEY. EXISTING UTILITIES NOT INDICATED TO BE REMOVED SHALL REMAIN IN PLACE AND PROTECTED DURING CONSTRUCTION.
3. REFER TO STRUCTURAL SHEET FOR STRUCTURES AND SHEET PILE DETAIL.
4. DES PLAINES RIVER ROAD AND MILWAUKEE ROAD FLOODWALL CENTERLINE STATIONING IS 202+00 TO 291+29.
5. CONTRACTOR SHALL ADEQUATELY PROTECT OPEN EXCAVATION FROM INTRUSION.
6. ROADWAY AND CURB/GUTTER, WITHIN THE WORKLIMITS, DAMAGE DUE TO CONSTRUCTION ACTIVITES SHALL BE RESTORED TO PRE-CONSTRUCTION GRADE AND CONDITIONS.
7. THE SHEET PILE WALL EXTENDS BELOW ELEV. 625. REFER TO STRUCTURAL SHEET S-01 TO S-04 FOR SHEET PILE BOTTOM ELEVATION.
8. THE EXISTING GUARDRAIL SHALL BE REMOVED AND RELOCATED ALONG THE CURB STARTING STA. 247+76.3. 187.5 LF OF NEW GUARDRAIL SHALL BE CONNECTED TO THE END OF THE EXISTING GUARDRAIL. REFER TO SHEET C-42 FOR GUARDRAIL DETAILS.
9. ALL TREES WITHIN THE WORKLIMITS NOT DESIGNATED TO BE REMOVED SHALL BE PROTECTED IN ACCORDANCE TO SECTION 02931 TREE PROTECTION. SEE SHEET C-42 FOR TREE PROTECTION DETAILS.
10. SEE SHEET C-42 FOR GRAVEL PATH TYP. SECTION.
11. TREES WITHOUT DBH SHOWN OR LISTED ARE TREES LESS THAN 8 INCHES DBH.
12. PRIOR TO CONSTRUCTION, THE EXISTING 1-PHASE TRANSFORMER ON THE EXISTING POLE WILL BE UPGRADE TO A 3-PHASE TRANSFORMER BY COM-ED. THE CONTRACTOR SHALL INSTALLED THE UNDERGROUND CONDUIT IN ACCORDANCE TO THE ELECTRICAL PLAN SHEET E-02 AND SECTION 16415 OF THE SPECIFICATIONS.

20 10 0 20 40
HORIZONTAL SCALE IN FEET

4 2 0 4 8
VERTICAL SCALE IN FEET

FLOODWALL CENTERLINE PROFILE

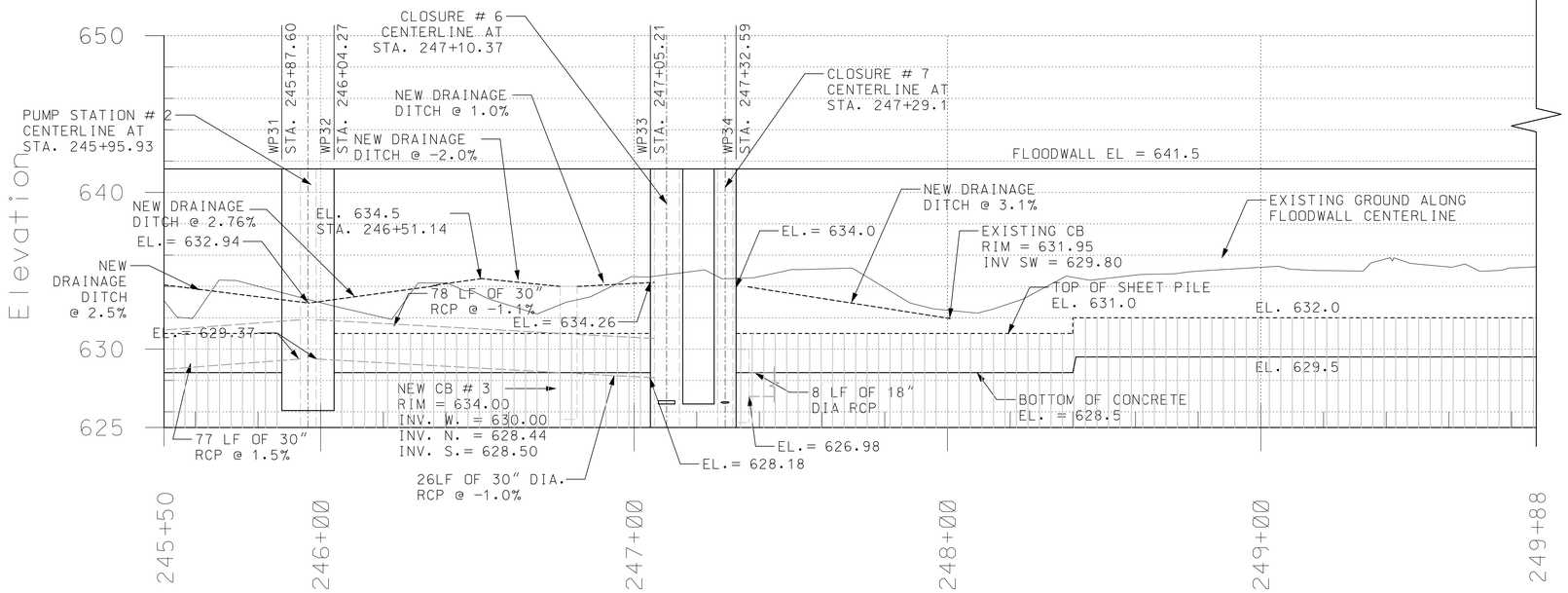

US Army Corps of Engineers Chicago District

SYMBOL	AMENDMENT DESCRIPTION	DATE APPROVED	SYMBOL	DESCRIPTION	DATE APPROVED

DESIGNED BY: GA | DATE: 08-18-2008
DRAWN BY: GA | SCALE: AS SHOWN
CHECKED BY: JT | SOLICITATION NUMBER: W912P6-08-B-0003
SUBMITTED BY: JOHN GROBOSKI, P.E. 08-18-08 | DATE:

U.S.ARMY ENGINEER DISTRICT
CORPS OF ENGINEERS
CHICAGO, ILLINOIS

DES PLAINES RIVER, ILLINOIS
LOCAL FLOOD PROTECTION
FLOODWALL 37
RIVER RD/MILWAUKEE AVE.

SITE PLAN AND PROFILE
STA. 245+50 TO 249+88

SHEET REFERENCE NUMBER:
C-31
SHEET 38 OF 131

PLOT DATE: 8/18/2008
FILENAME: lrwa37-snt31.dgn

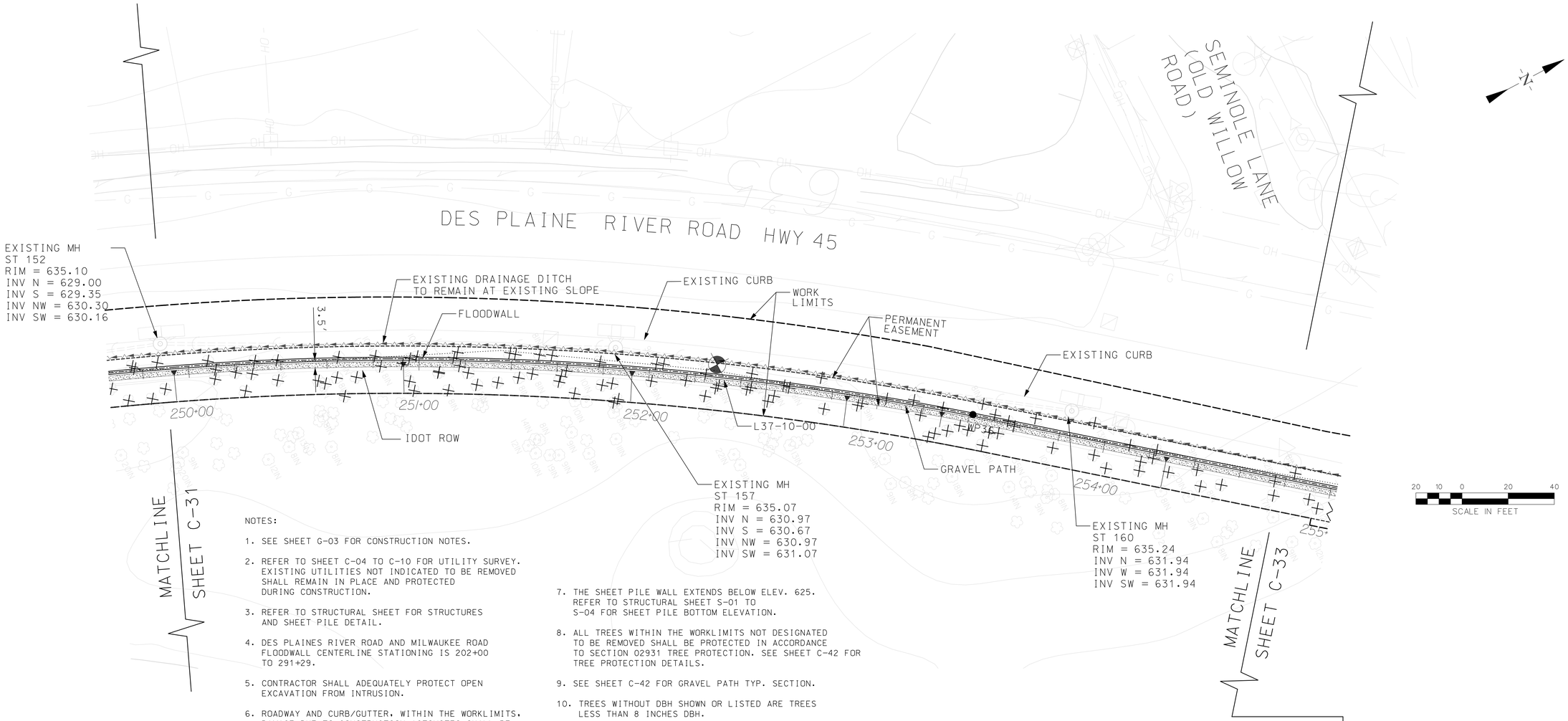

NOTES:

1. SEE SHEET G-03 FOR CONSTRUCTION NOTES.
2. REFER TO SHEET C-04 TO C-10 FOR UTILITY SURVEY. EXISTING UTILITIES NOT INDICATED TO BE REMOVED SHALL REMAIN IN PLACE AND PROTECTED DURING CONSTRUCTION.
3. REFER TO STRUCTURAL SHEET FOR STRUCTURES AND SHEET PILE DETAIL.
4. DES PLAINES RIVER ROAD AND MILWAUKEE ROAD FLOODWALL CENTERLINE STATIONING IS 202+00 TO 291+29.
5. CONTRACTOR SHALL ADEQUATELY PROTECT OPEN EXCAVATION FROM INTRUSION.
6. ROADWAY AND CURB/GUTTER, WITHIN THE WORKLIMITS, DAMAGE DUE TO CONSTRUCTION ACTIVITES SHALL BE RESTORED TO PRE-CONSTRUCTION GRADE AND CONDITIONS.
7. THE SHEET PILE WALL EXTENDS BELOW ELEV. 625. REFER TO STRUCTURAL SHEET S-01 TO S-04 FOR SHEET PILE BOTTOM ELEVATION.
8. ALL TREES WITHIN THE WORKLIMITS NOT DESIGNATED TO BE REMOVED SHALL BE PROTECTED IN ACCORDANCE TO SECTION 02931 TREE PROTECTION. SEE SHEET C-42 FOR TREE PROTECTION DETAILS.
9. SEE SHEET C-42 FOR GRAVEL PATH TYP. SECTION.
10. TREES WITHOUT DBH SHOWN OR LISTED ARE TREES LESS THAN 8 INCHES DBH.

FLOODWALL CENTERLINE PROFILE

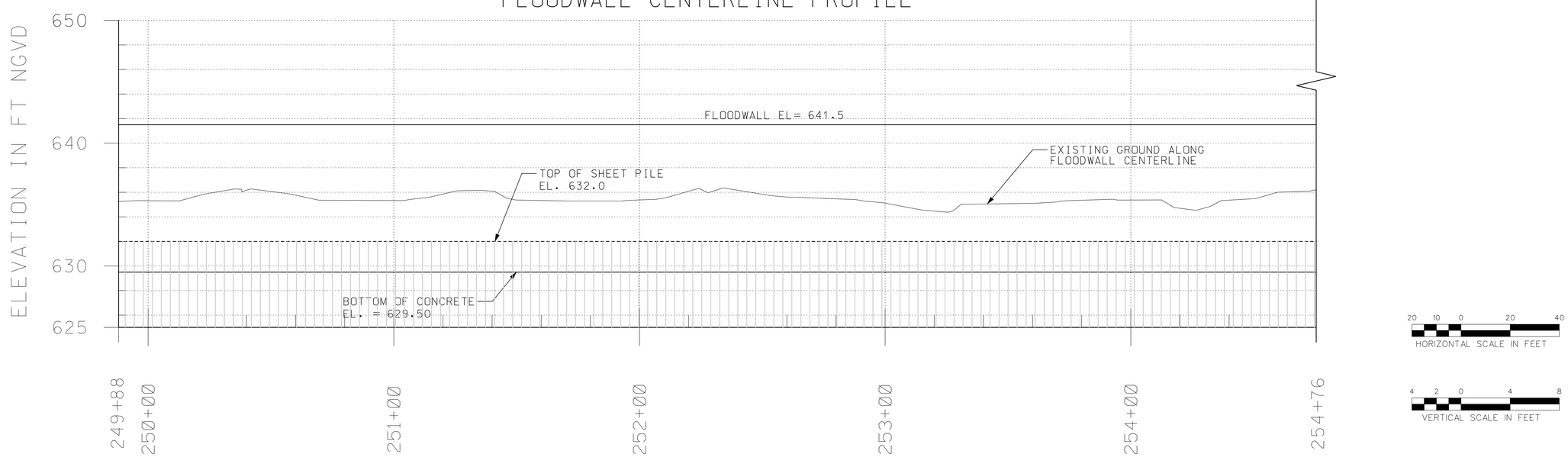

US Army Corps of Engineers
Chicago District

SYMBOL	AMENDMENT DESCRIPTION	DATE	APPROVED	SYMBOL	DESCRIPTION	DATE	APPROVED

DESIGNED BY: GA | DATE: 08-18-2008
DRAWN BY: GA | SCALE: AS SHOWN
CHECKED BY: JT | SOLICITATION NUMBER: W912P6-08-B-0003
JOHN GROBOSKI, P.E. 08-18-08
SUBMITTED BY: | DATE:

U.S. ARMY ENGINEER DISTRICT
CORPS OF ENGINEERS
CHICAGO, ILLINOIS

DES PLAINES RIVER, ILLINOIS
LOCAL FLOOD PROTECTION
FLOODWALL 37
RIVER RD/MILWAUKEE AVE.
SITE PLAN AND PROFILE
STA. 249+88 TO 254+76

SHEET REFERENCE NUMBER:
C-32

PLOT DATE: 8/18/2008
FILENAME: levee37-shtC32.dgn

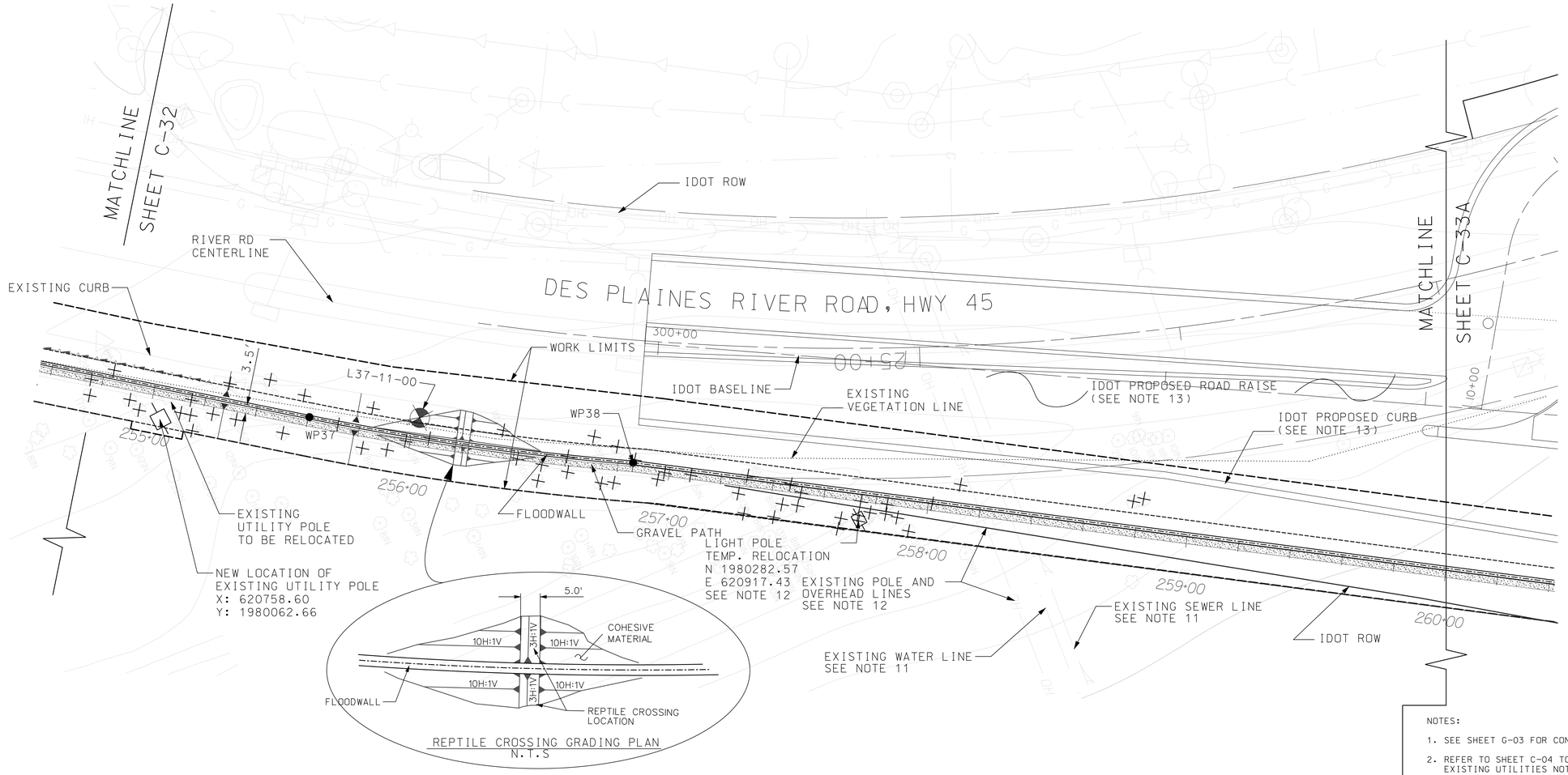

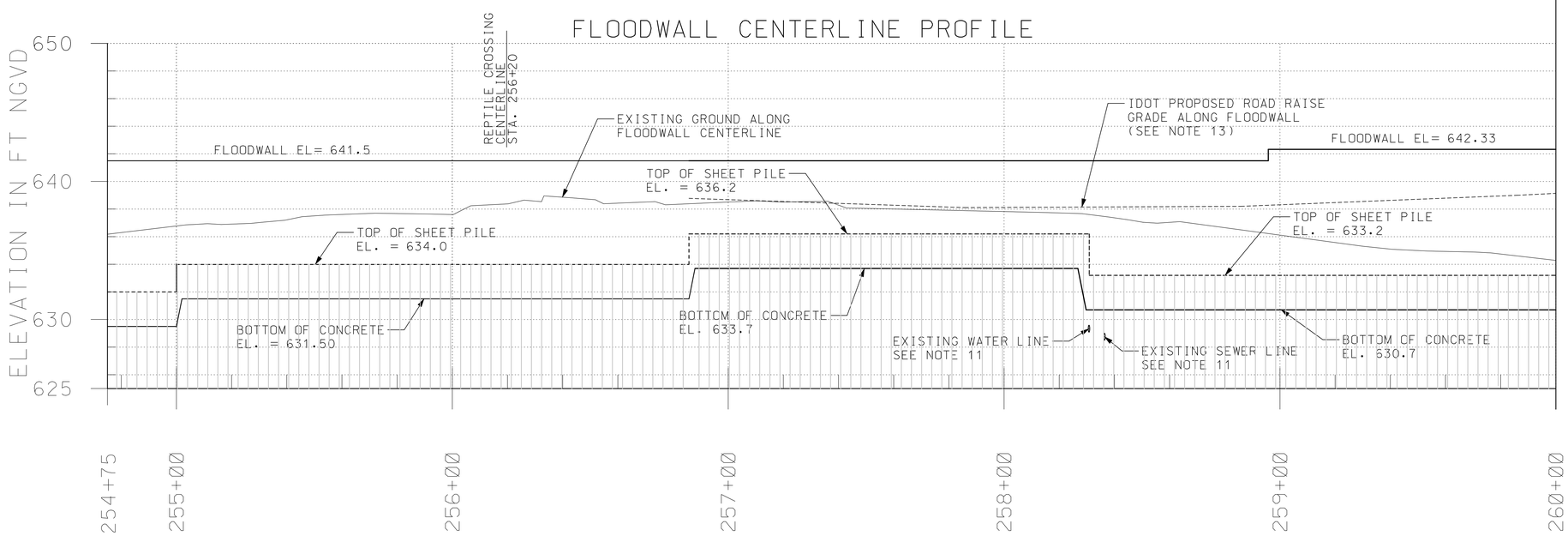

NOTES:

1. SEE SHEET G-03 FOR CONSTRUCTION NOTES.
2. REFER TO SHEET C-04 TO C-10 FOR UTILITY SURVEY. EXISTING UTILITIES NOT INDICATED TO BE REMOVED SHALL REMAIN IN PLACE AND NOT BE DAMAGED DURING CONSTRUCTION.
3. REFER TO STRUCTURAL SHEET FOR STRUCTURES AND SHEET PILE DETAIL.
4. DES PLAINES RIVER ROAD AND MILWAUKEE ROAD FLOODWALL CENTERLINE STATIONING IS 202+00 TO 291+29.
5. CONTRACTOR SHALL ADEQUATELY PROTECT OPEN EXCAVATION FROM INTRUSION.
6. ROADWAY AND CURB/GUTTER, WITHIN THE WORKLIMITS, DAMAGE DUE TO CONSTRUCTION ACTIVITES SHALL BE RESTORED TO PRE-CONSTRUCTION GRADE AND CONDITIONS.
7. THE SHEET PILE WALL EXTENDS BELOW ELEV. 625. REFER TO STRUCTURAL SHEET S-01 TO S-04 FOR SHEET PILE BOTTOM ELEVATION.
8. ALL TREES WITHIN THE WORKLIMITS NOT DESIGNATED TO BE REMOVED SHALL BE PROTECTED IN ACCORDANCE TO SECTION 02931 TREE PROTECTION. SEE SHEET C-42 FOR TREE PROTECTION DETAILS.
9. SEE SHEET C-42 FOR GRAVEL PATH TYP. SECTION.
10. TREES WITHOUT DBH SHOWN OR LISTED ARE TREES LESS THAN 8 INCHES DBH.
11. PRIOR TO CONSTRUCTION, THE EXISTING WATER AND SANITARY SEWER LINES WILL BE RELOCATED BY AMERICAN WATER.

    AMERICAN WATER POC: JOHN BEDROSIAN
12. PRIOR TO CONSTRUCTION OF THE FLOODWALL, WITHIN THE VICINITY OF THE EXISTING POLE, THE CONTRACTOR SHALL COORDINATE WITH COMED AND THE COR TO TEMPORARILY RELOCATE THE POLE AND REPLACE WHEN COMPLETE. THE POLE WILL BE RELOCATED AND REPLACED BY COMED.

    COMED POC: GARRY VONDRASEK
    NEW BUSINESS- FIELD REPRESENTATIVE
    TEL: 630-691-4638
13. IDOT PROPOSED ROAD RAISE WILL BE CONSTRUCTION BY IDOT'S CONTRACTOR. CONTRACTOR SHALL COORDINATE WITH IDOT'S CONTRACTOR AS NEEDED DURING CONSTRUCTION.

US Army Corps of Engineers
Chicago District

SYMBOL	AMENDMENT DESCRIPTION	DATE APPROVED	SYMBOL	DESCRIPTION	DATE APPROVED

DESIGNED BY: GA | DATE: 08-18-2008
DRAWN BY: GA | SCALE: AS SHOWN
CHECKED BY: JT | SOLICITATION NUMBER: W912P6-08-B-0003
SUBMITTED BY: JOHN GROBOSKI, P.E. 08-18-08 | DATE:

U.S.ARMY ENGINEER DISTRICT
CORPS OF ENGINEERS
CHICAGO, ILLINOIS

DES PLAINES RIVER, ILLINOIS
LOCAL FLOOD PROTECTION
FLOODWALL 37
RIVER RD/MILWAUKEE AVE.
SITE PLAN AND PROFILE
STA. 254+75 TO 260+00

SHEET REFERENCE NUMBER:
C-33
SHEET 40 OF 131

PLOT DATE: 8/18/2008
FILENAME: levee37-sht033.dgn

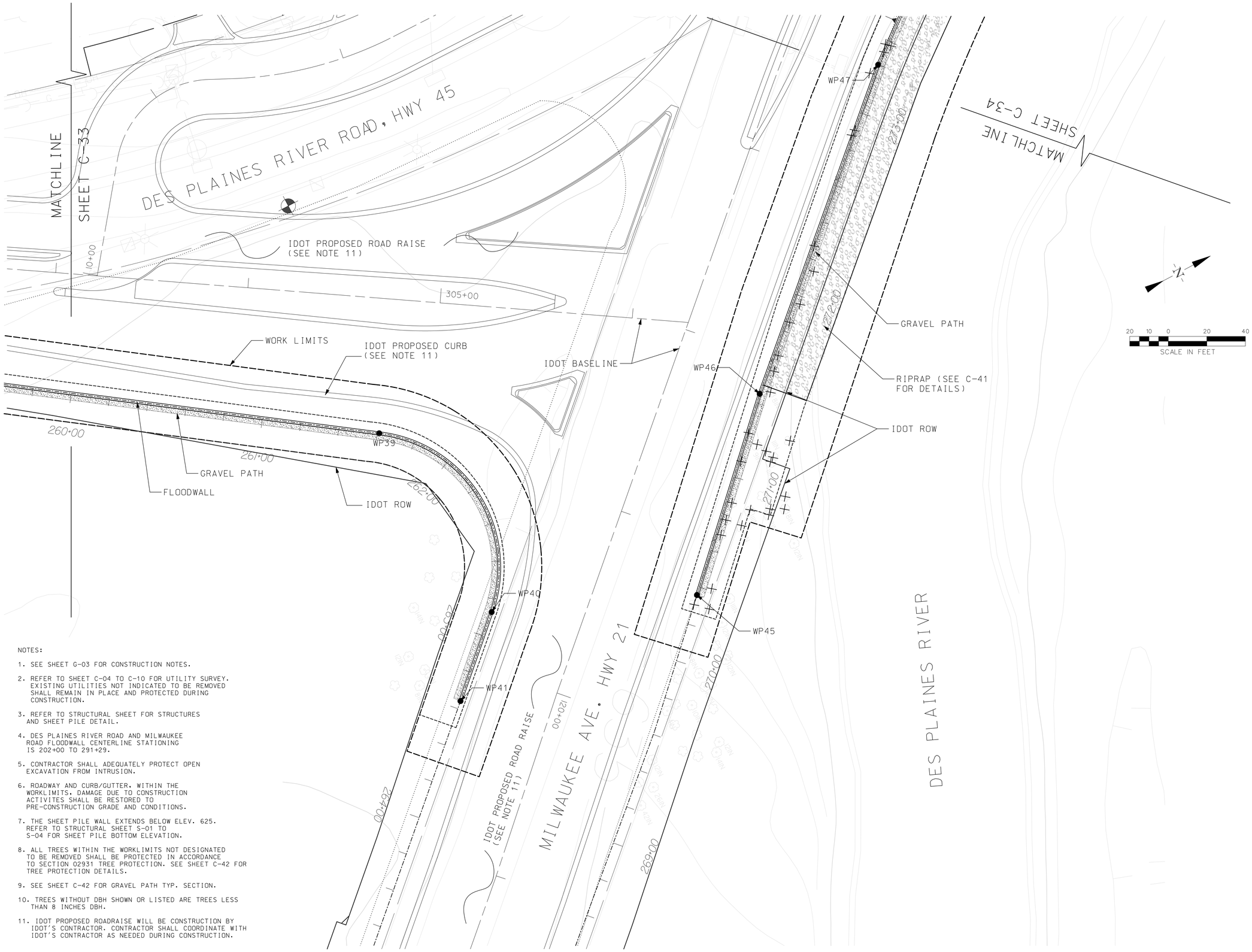

NOTES:

1. SEE SHEET G-03 FOR CONSTRUCTION NOTES.
2. REFER TO SHEET C-04 TO C-10 FOR UTILITY SURVEY. EXISTING UTILITIES NOT INDICATED TO BE REMOVED SHALL REMAIN IN PLACE AND PROTECTED DURING CONSTRUCTION.
3. REFER TO STRUCTURAL SHEET FOR STRUCTURES AND SHEET PILE DETAIL.
4. DES PLAINES RIVER ROAD AND MILWAUKEE ROAD FLOODWALL CENTERLINE STATIONING IS 202+00 TO 291+29.
5. CONTRACTOR SHALL ADEQUATELY PROTECT OPEN EXCAVATION FROM INTRUSION.
6. ROADWAY AND CURB/GUTTER, WITHIN THE WORKLIMITS, DAMAGE DUE TO CONSTRUCTION ACTIVITES SHALL BE RESTORED TO PRE-CONSTRUCTION GRADE AND CONDITIONS.
7. THE SHEET PILE WALL EXTENDS BELOW ELEV. 625. REFER TO STRUCTURAL SHEET S-01 TO S-04 FOR SHEET PILE BOTTOM ELEVATION.
8. ALL TREES WITHIN THE WORKLIMITS NOT DESIGNATED TO BE REMOVED SHALL BE PROTECTED IN ACCORDANCE TO SECTION 02931 TREE PROTECTION. SEE SHEET C-42 FOR TREE PROTECTION DETAILS.
9. SEE SHEET C-42 FOR GRAVEL PATH TYP. SECTION.
10. TREES WITHOUT DBH SHOWN OR LISTED ARE TREES LESS THAN 8 INCHES DBH.
11. IDOT PROPOSED ROADRAISE WILL BE CONSTRUCTION BY IDOT'S CONTRACTOR. CONTRACTOR SHALL COORDINATE WITH IDOT'S CONTRACTOR AS NEEDED DURING CONSTRUCTION.

US Army Corps of Engineers
Chicago District

SYMBOL	AMENDMENT DESCRIPTION	DATE APPROVED	SYMBOL	DESCRIPTION	DATE APPROVED

DESIGNED BY: GA
DATE: 08-18-2008
DRAWN BY: GA
SCALE: AS SHOWN
CHECKED BY: JT
SOLICITATION NUMBER: W912P6-08-B-0003
SUBMITTED BY: JOHN GROBOSKI, P.E.
DATE: 08-18-08

U.S.ARMY ENGINEER DISTRICT
CORPS OF ENGINEERS
CHICAGO, ILLINOIS

DES PLAINES RIVER, ILLINOIS
LOCAL FLOOD PROTECTION
FLOODWALL 37
RIVER RD/MILWAUKEE AVE.
SITE PLAN
STA. 260+00 TO 273+20

SHEET REFERENCE NUMBER:
C-33A

PLOT DATE: 8/18/2008
FILENAME: levee37-sht033a.dgn

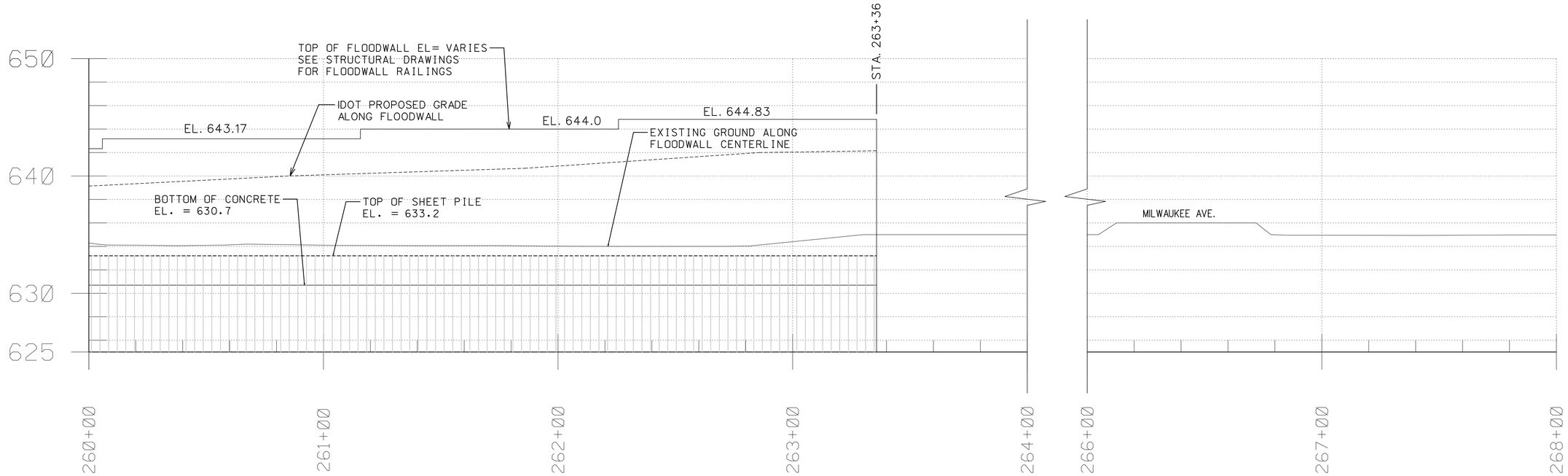

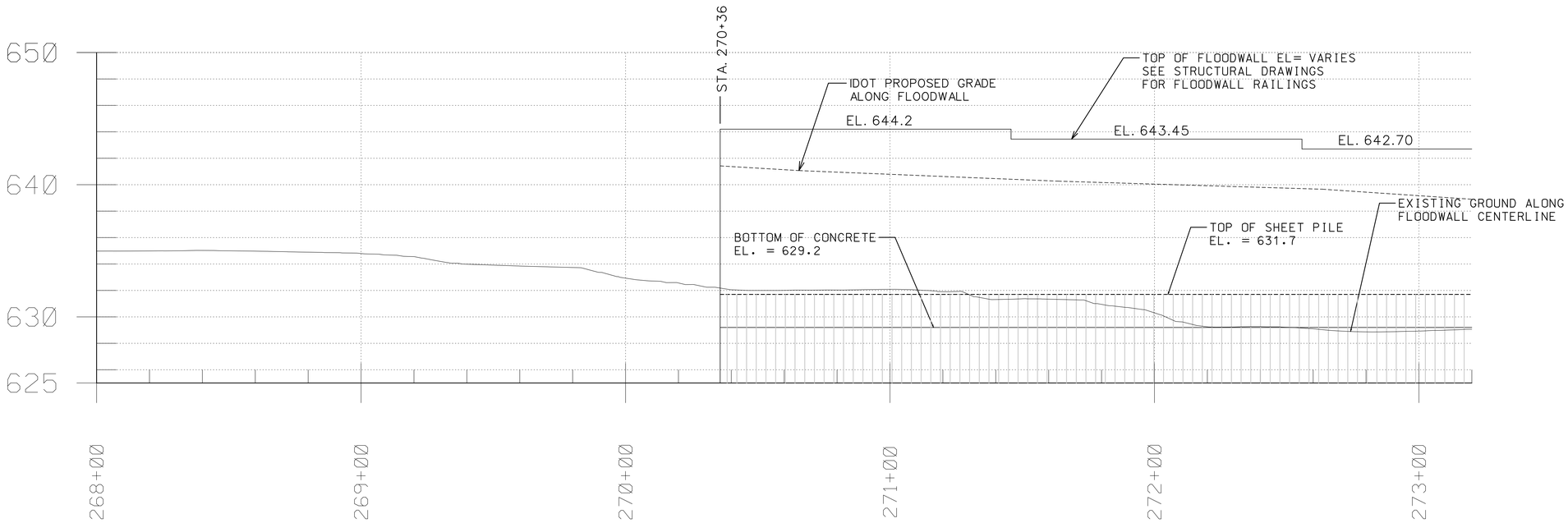

20 10 0 20 40
1 INCH = 20 FEET
HORIZONTAL SCALE

4 2 0 4 8
1 INCH = 4 FEET
VERTICAL SCALE

US Army Corps of Engineers
Chicago District

SYMBOL	AMENDMENT DESCRIPTION	DATE	APPROVED	SYMBOL	DESCRIPTION	DATE	APPROVED

DESIGNED BY: GA
DATE: 08-18-2008
DRAWN BY: GA
SCALE: AS SHOWN
CHECKED BY: JT
SOLICITATION NUMBER: W912P6-08-B-0003
JOHN GROBOSKI, P.E. 08-18-08
SUBMITTED BY:
DATE:

U.S.ARMY ENGINEER DISTRICT
CORPS OF ENGINEERS
CHICAGO, ILLINOIS

DES PLAINES RIVER, ILLINOIS
LOCAL FLOOD PROTECTION
FLOODWALL 37
RIVER RD/MILWAUKEE AVE.
PROFILE
STA. 260+00 TO STA. 273+20

SHEET REFERENCE NUMBER:
C-33B
SHEET 42 OF 131

PLOT DATE: 8/18/2008
FILENAME: levee37-sht C33B.dgn

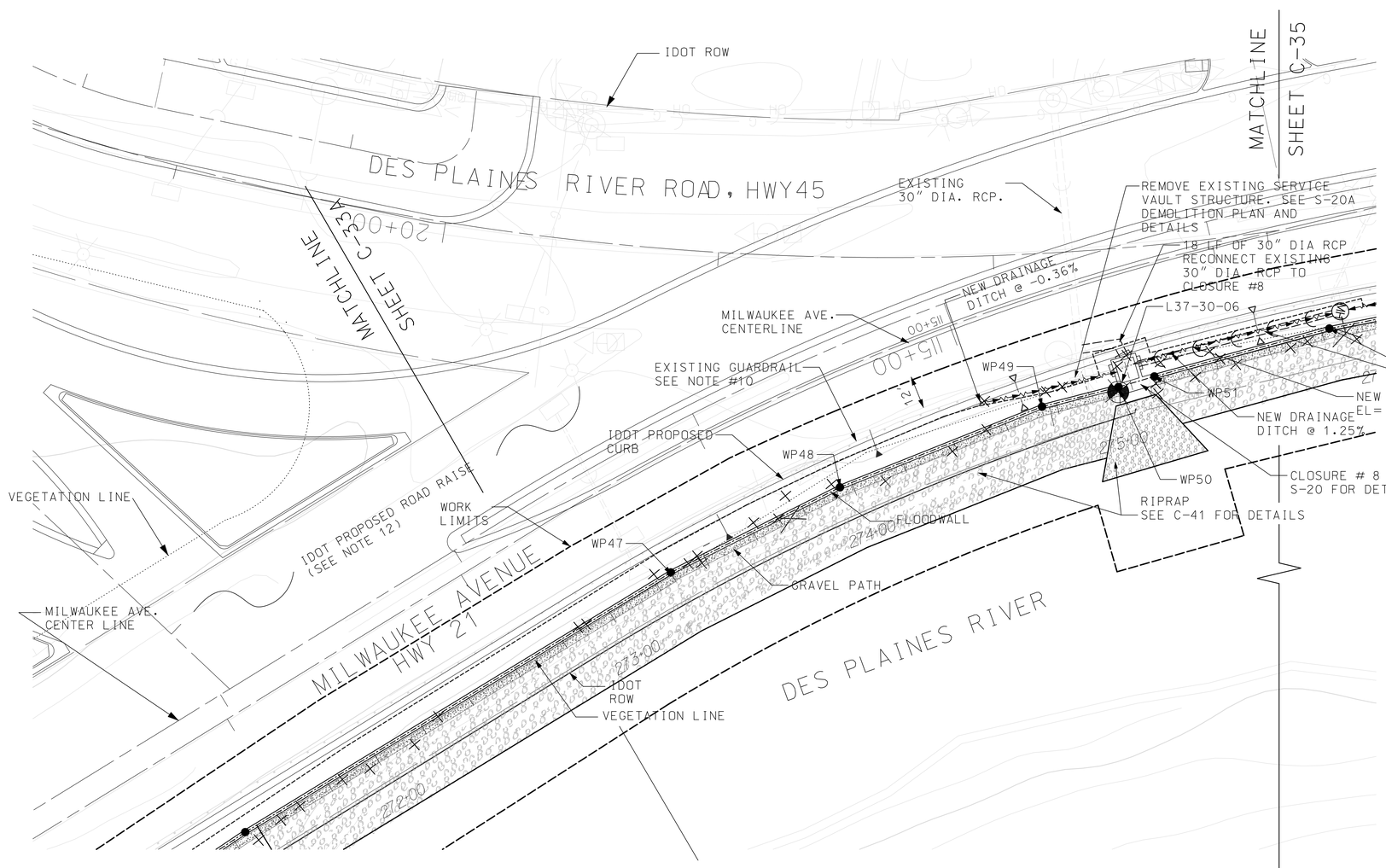

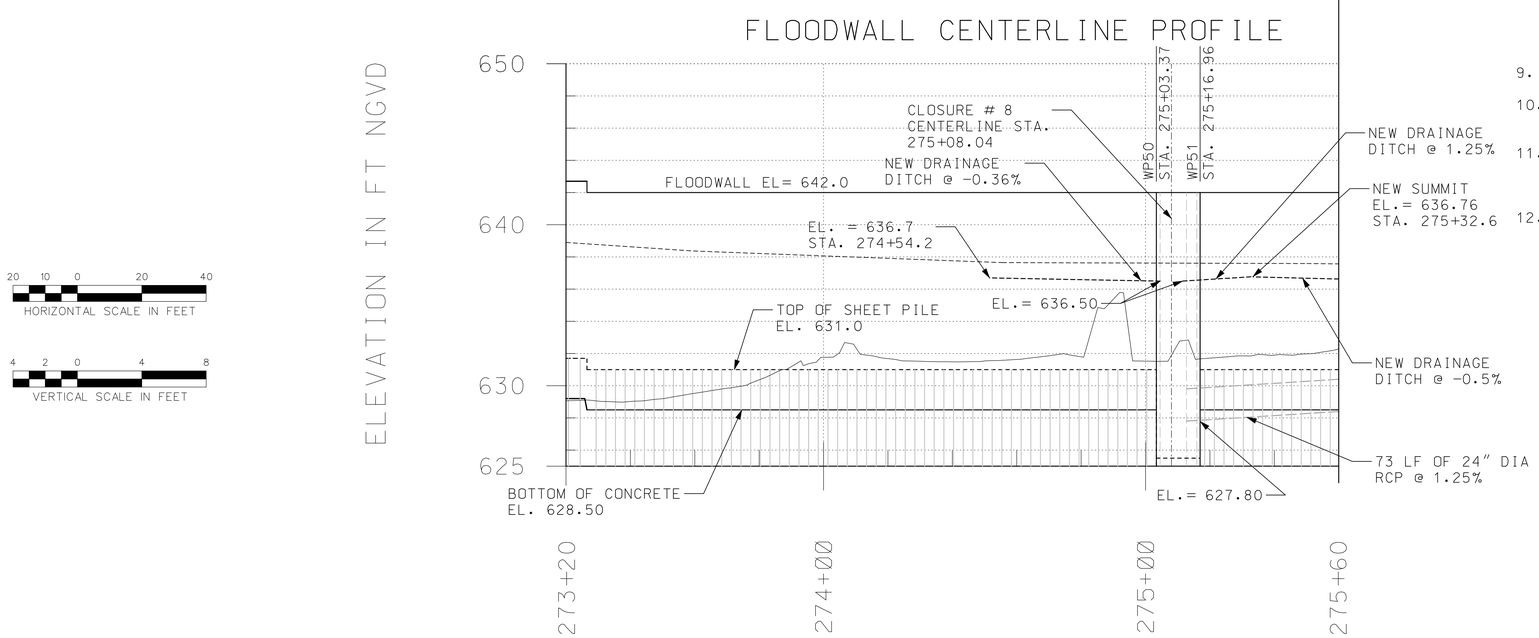

NOTES:

1. SEE SHEET G-03 FOR CONSTRUCTION NOTES.
2. REFER TO SHEET C-04 TO C-10 FOR UTILITY SURVEY. EXISTING UTILITIES NOT INDICATED TO BE REMOVED SHALL REMAIN IN PLACE AND PROTECTED DURING CONSTRUCTION.
3. REFER TO STRUCTURAL SHEET FOR STRUCTURES AND SHEET PILE DETAIL.
4. DES PLAINES RIVER ROAD AND MILWAUKEE ROAD FLOODWALL CENTERLINE STATIONING IS 202+00 TO 291+29.
5. CONTRACTOR SHALL ADEQUATELY PROTECT OPEN EXCAVATION FROM INTRUSION.
6. ROADWAY AND CURB/GUTTER, WITHIN THE WORKLIMITS, DAMAGE DUE TO CONSTRUCTION ACTIVITES SHALL BE RESTORED TO PRE-CONSTRUCTION GRADE AND CONDITIONS.
7. THE SHEET PILE WALL EXTENDS BELOW ELEV. 625. REFER TO STRUCTURAL SHEET S-01 TO S-04 FOR SHEET PILE BOTTOM ELEVATION.
8. ALL TREES WITHIN THE WORKLIMITS NOT DESIGNATED TO BE REMOVED SHALL BE PROTECTED IN ACCORDANCE TO SECTION 02931 TREE PROTECTION. SEE SHEET C-42 FOR TREE PROTECTION DETAILS.
9. SEE SHEET C-42 FOR GRAVEL PATH TYP. SECTION.
10. EXISTING GUARDRAIL SHALL BE REMOVED AND RELOCATED ALONG THE CURB.
11. TREES WITHOUT DBH SHOWN OR LISTED ARE TREES LESS THAN 8 INCHES DBH.
12. IDOT PROPOSED ROADRAISE WILL BE CONSTRUCTION BY IDOT'S CONTRACTOR. CONTRACTOR SHALL COORDINATE WITH IDOT'S CONTRACTOR AS NEEDED DURING CONSTRUCTION.

US Army Corps of Engineers Chicago District

SYMBOL	AMENDMENT DESCRIPTION	DATE	APPROVED	SYMBOL	DESCRIPTION	DATE	APPROVED

DESIGNED BY: GA | DATE: 08-18-2008
DRAWN BY: GA | SCALE: AS SHOWN
CHECKED BY: JT | SOLICITATION NUMBER: W912P6-08-B-0003
SUBMITTED BY: JOHN GROBOSKI, P.E. | DATE: 08-18-08

U.S.ARMY ENGINEER DISTRICT
CORPS OF ENGINEERS
CHICAGO, ILLINOIS

DES PLAINES RIVER, ILLINOIS
LOCAL FLOOD PROTECTION
FLOODWALL 37
RIVER RD/MILWAUKEE AVE.

SITE PLAN AND PROFILE
STA. 273+20 TO 275+60

SHEET REFERENCE NUMBER:
C-34
SHEET 43 OF 131

PLOT DATE: 8/18/2008
FILENAME: levee37-shtC34.dgn

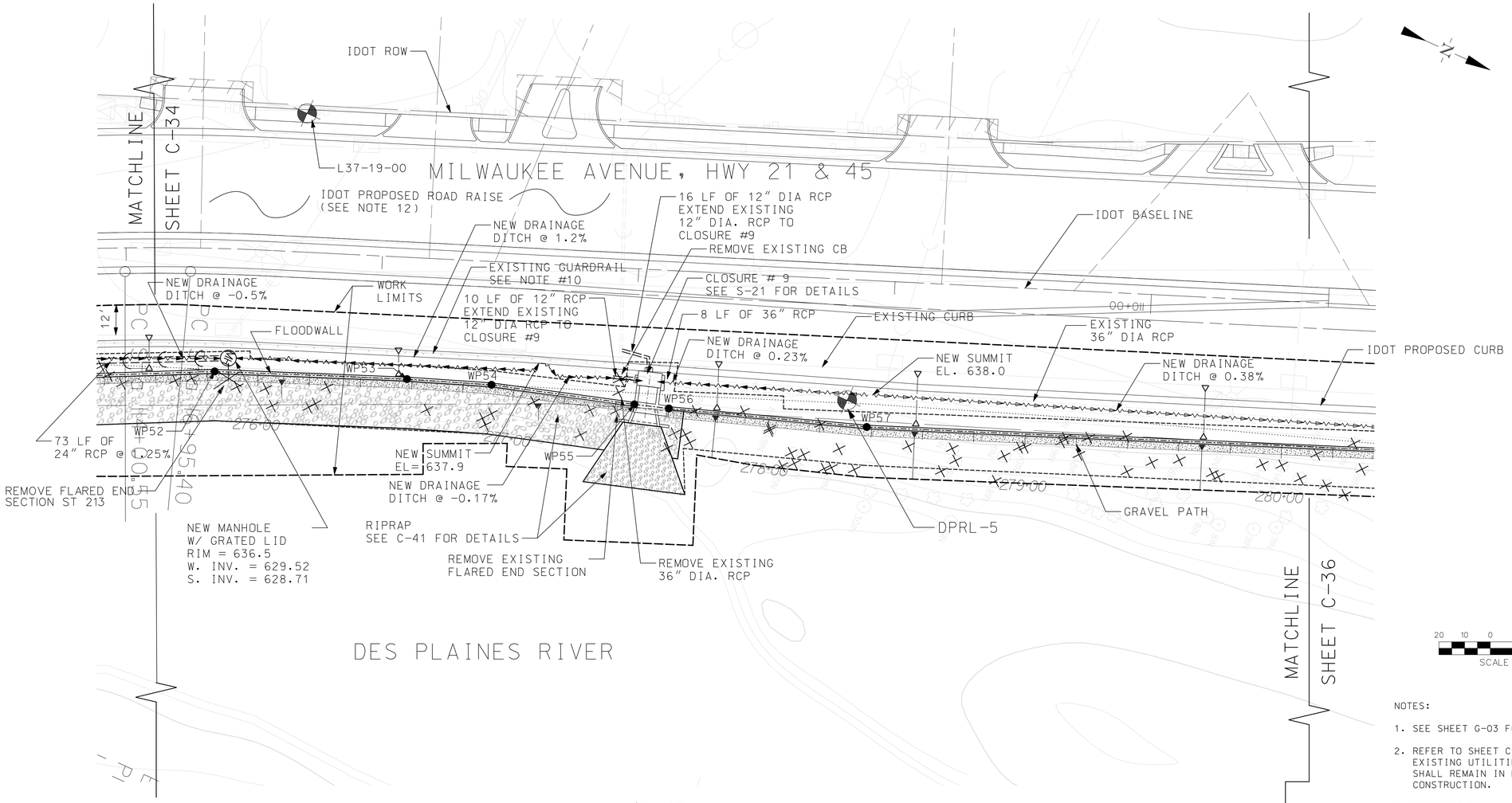

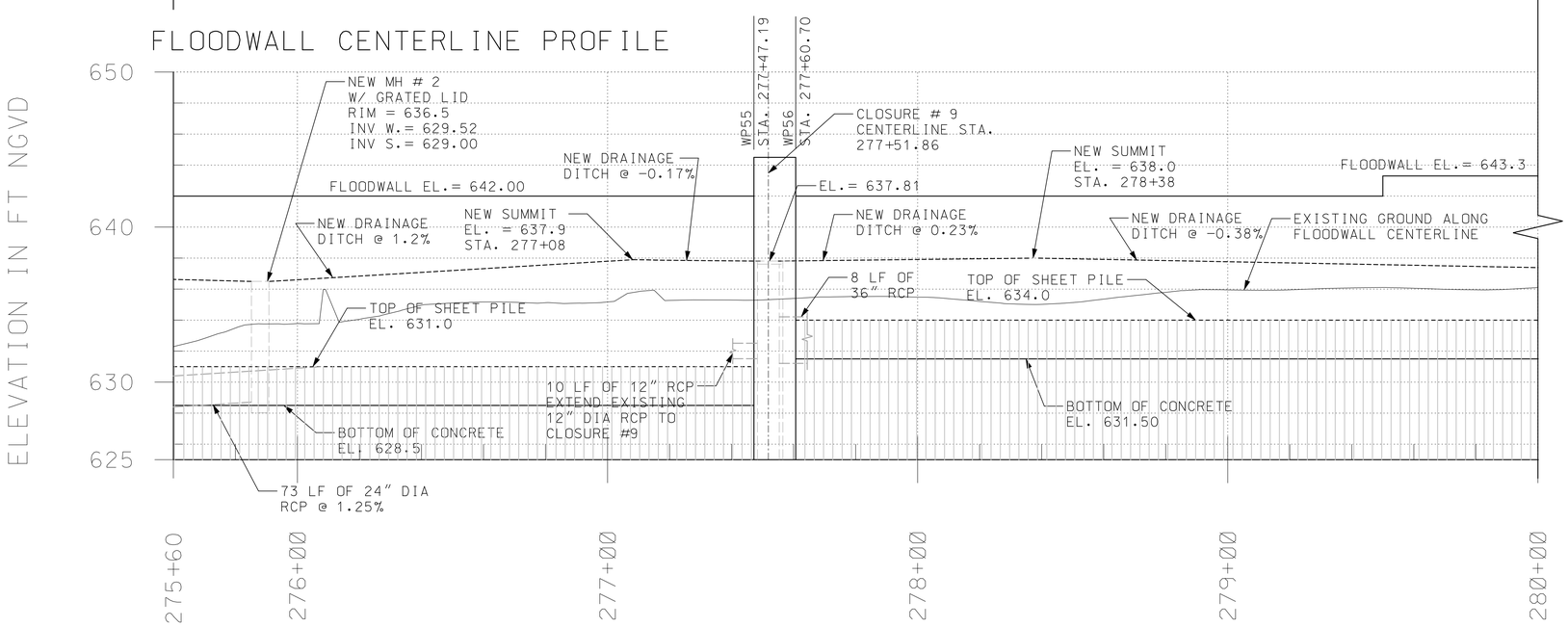

20 10 0 20 40
SCALE IN FEET

NOTES:

1. SEE SHEET G-03 FOR CONSTRUCTION NOTES.
2. REFER TO SHEET C-04 TO C-10 FOR UTILITY SURVEY. EXISTING UTILITIES NOT INDICATED TO BE REMOVED SHALL REMAIN IN PLACE AND PROTECTED DURING CONSTRUCTION.
3. REFER TO STRUCTURAL SHEET FOR STRUCTURES AND SHEET PILE DETAIL.
4. DES PLAINES RIVER ROAD AND MILWAUKEE ROAD FLOODWALL CENTERLINE STATIONING IS 202+00 TO 291+29.
5. CONTRACTOR SHALL ADEQUATELY PROTECT OPEN EXCAVATION FROM INTRUSION.
6. ROADWAY AND CURB/GUTTER, WITHIN THE WORKLIMITS, DAMAGE DUE TO CONSTRUCTION ACTIVITES SHALL BE RESTORED TO PRE-CONSTRUCTION GRADE AND CONDITIONS.
7. THE SHEET PILE WALL EXTENDS BELOW ELEV. 625. REFER TO STRUCTURAL SHEET S-01 TO S-04 FOR SHEET PILE BOTTOM ELEVATION.
8. ALL TREES WITHIN THE WORKLIMITS NOT DESIGNATED TO BE REMOVED SHALL BE PROTECTED IN ACCORDANCE TO SECTION 02931 TREE PROTECTION. SEE SHEET C-42 FOR TREE PROTECTION DETAILS.
9. SEE SHEET C-42 FOR GRAVEL PATH TYP. SECTION.
10. THE EXISTING GUARDRAIL SHALL BE REMOVED AND RELOCATED ALONG THE CURB.
11. TREES WITHOUT DBH SHOWN OR LISTED ARE TREES LESS THAN 8 INCHES DBH.
12. IDOT PROPOSED ROADRAISE WILL BE CONSTRUCTION BY IDOT'S CONTRACTOR. CONTRACTOR SHALL COORDINATE WITH IDOT'S CONTRACTOR AS NEEDED DURING CONSTRUCTION.

4 2 0 4 8
VERTICAL SCALE IN FEET

20 10 0 20 40
HORIZONTAL SCALE IN FEET

US Army Corps of Engineers
Chicago District

SYMBOL	AMENDMENT DESCRIPTION	DATE APPROVED	SYMBOL	DESCRIPTION	DATE APPROVED

DESIGNED BY: GA
DATE: 08-18-2008
DRAWN BY: GA
SCALE: AS SHOWN
CHECKED BY: JT
SOLICITATION NUMBER: W912P6-08-B-0003
SUBMITTED BY: JOHN GROBOSKI, P.E.
DATE: 08-18-08

U.S. ARMY ENGINEER DISTRICT
CORPS OF ENGINEERS
CHICAGO, ILLINOIS

DES PLAINES RIVER, ILLINOIS
LOCAL FLOOD PROTECTION
FLOODWALL 37
RIVER RD/MILWAUKEE AVE.

SITE PLAN AND PROFILE
STA. 275+60 TO 280+00

SHEET REFERENCE NUMBER:
C-35

PLOT DATE: 8/18/2008
FILENAME: lrwa37-sht35.dgn

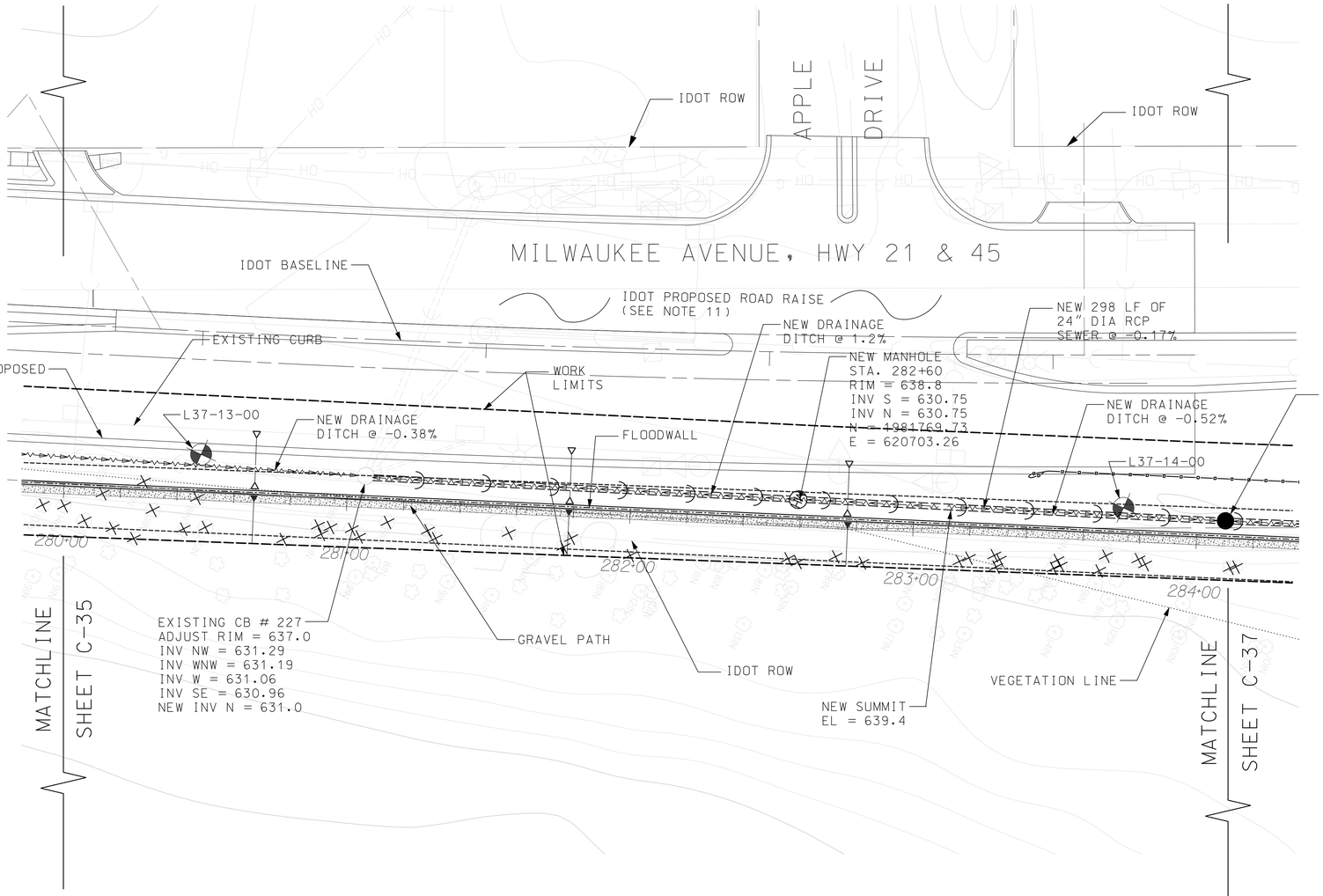

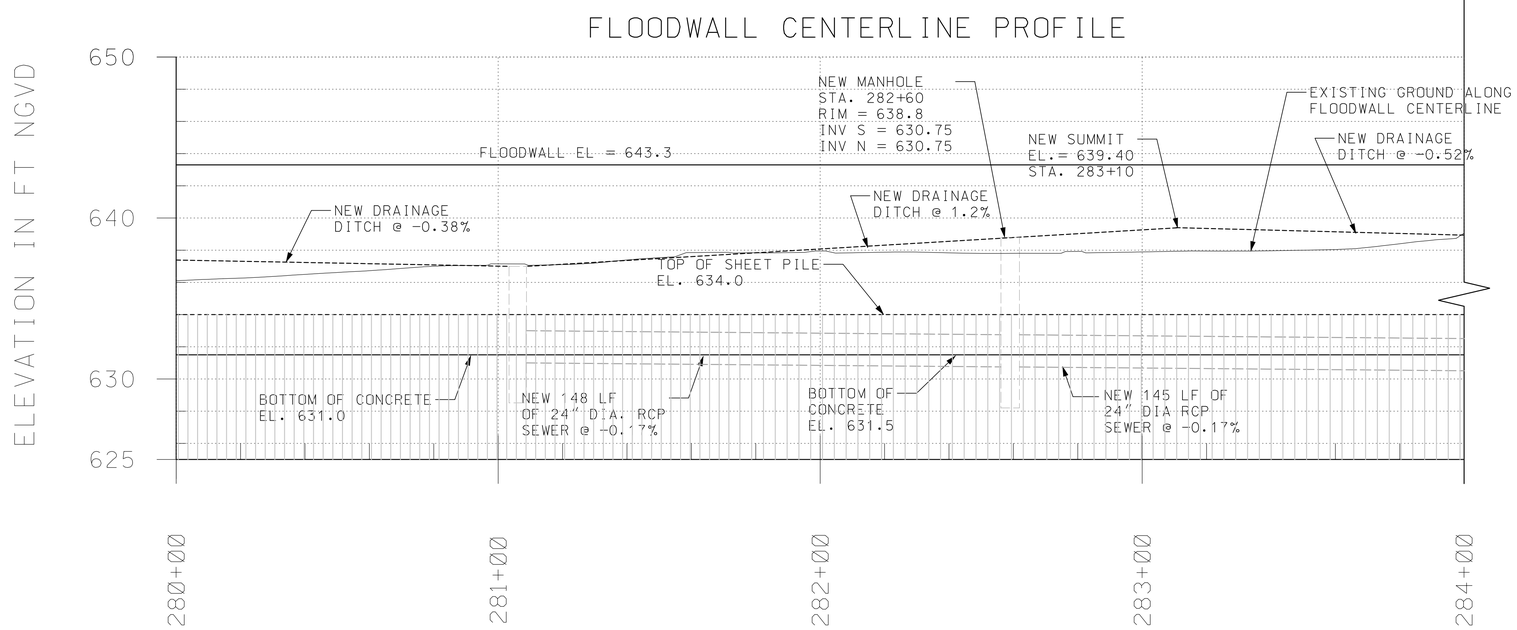

20 10 0 20 40
SCALE IN FEET

NOTES:

1. SEE SHEET G-03 FOR CONSTRUCTION NOTES.
2. REFER TO SHEET C-04 TO C-10 FOR UTILITY SURVEY. EXISTING UTILITIES NOT INDICATED TO BE REMOVED SHALL REMAIN IN PLACE AND PROTECTED DURING CONSTRUCTION.
3. REFER TO STRUCTURAL SHEET FOR STRUCTURES AND SHEET PILE DETAIL.
4. DES PLAINES RIVER ROAD AND MILWAUKEE ROAD FLOODWALL CENTERLINE STATIONING IS 202+00 TO 291+29.
5. CONTRACTOR SHALL ADEQUATELY PROTECT OPEN EXCAVATION FROM INTRUSION.
6. ROADWAY AND CURB/GUTTER, WITHIN THE WORKLIMITS, DAMAGE DUE TO CONSTRUCTION ACTIVITES SHALL BE RESTORED TO PRE-CONSTRUCTION GRADE AND CONDITIONS.
7. THE SHEET PILE WALL EXTENDS BELOW ELEV. 625. REFER TO STRUCTURAL SHEET S-01 TO S-04 FOR SHEET PILE BOTTOM ELEVATION.
8. ALL TREES WITHIN THE WORKLIMITS NOT DESIGNATED TO BE REMOVED SHALL BE PROTECTED IN ACCORDANCE TO SECTION 02931 TREE PROTECTION. SEE SHEET C-42 FOR TREE PROTECTION DETAILS.
9. SEE SHEET C-42 FOR GRAVEL PATH TYP. SECTION.
10. TREES WITHOUT DBH SHOWN OR LISTED ARE TREES LESS THAN 8 INCHES DBH.
11. IDOT PROPOSED ROADRAISE WILL BE CONSTRUCTION BY IDOT'S CONTRACTOR. CONTRACTOR SHALL COORDINATE WITH IDOT'S CONTRACTOR AS NEEDED DURING CONSTRUCTION

4 2 0 4 8
VERTICAL SCALE IN FEET

20 10 0 20 40
HORIZONTAL SCALE IN FEET

US Army Corps of Engineers
Chicago District

SYMBOL	AMENDMENT DESCRIPTION	DATE APPROVED	SYMBOL	DESCRIPTION	DATE APPROVED

DESIGNED BY: GA
DATE: 08-18-2008
DRAWN BY: GA
SCALE: AS SHOWN
CHECKED BY: JT
SOLICITATION NUMBER: W912P6-08-B-0003
SUBMITTED BY: JOHN GROBOSKI, P.E.
DATE: 08-18-08

U.S. ARMY ENGINEER DISTRICT
CORPS OF ENGINEERS
CHICAGO, ILLINOIS

DES PLAINES RIVER, ILLINOIS
LOCAL FLOOD PROTECTION
FLOODWALL 37
RIVER RD/MILWAUKEE AVE.
SITE PLAN AND PROFILE
STA. 280+20 TO 284+00

SHEET REFERENCE NUMBER:
C-36
SHEET 45 OF 131

PLOT DATE: 8/18/2008
FILENAME: levee37-sht036.dgn

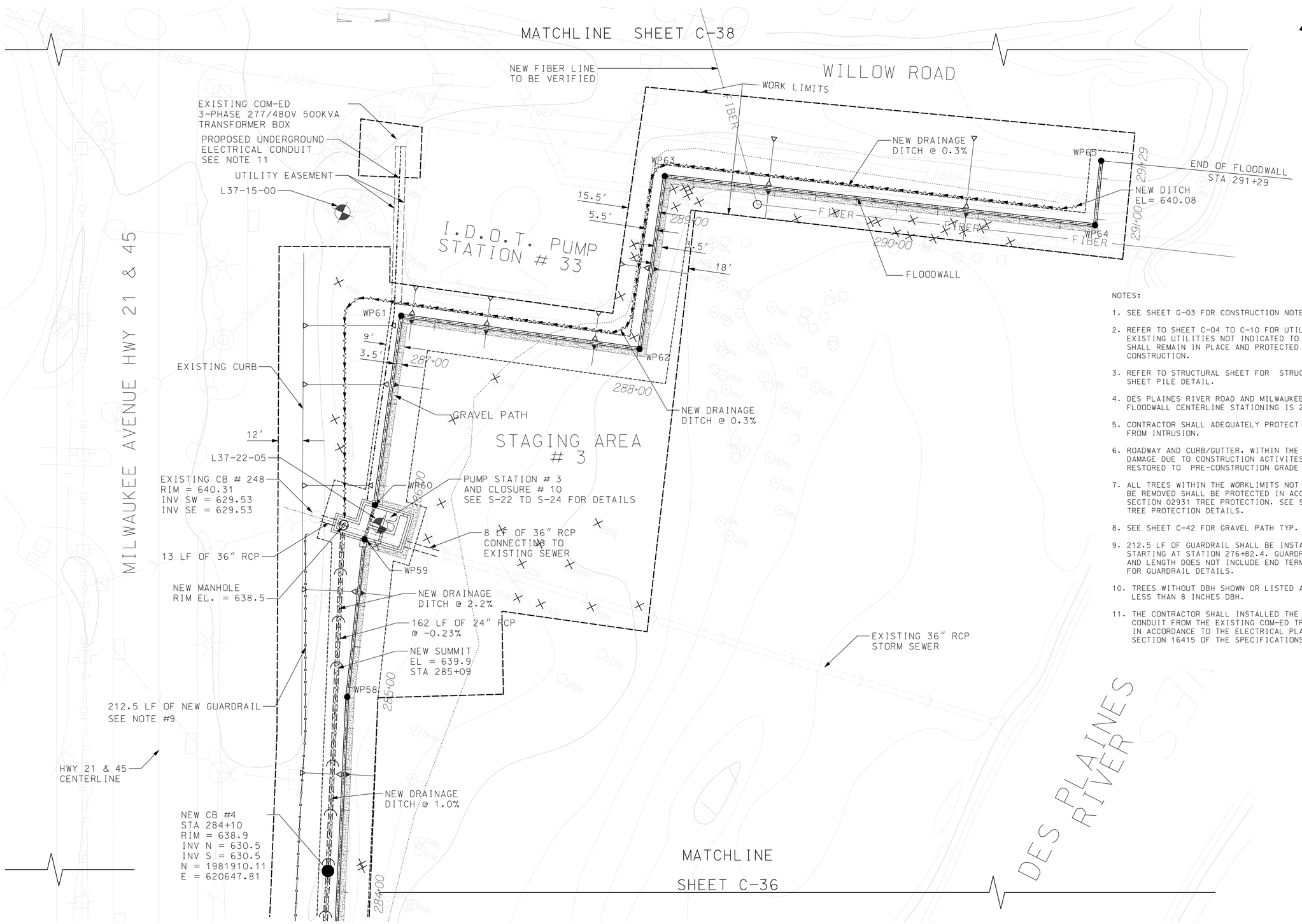

NOTES:

1. SEE SHEET G-03 FOR CONSTRUCTION NOTES.
2. REFER TO SHEET C-04 TO C-10 FOR UTILITY SURVEY. EXISTING UTILITIES NOT INDICATED TO BE REMOVED SHALL REMAIN IN PLACE AND PROTECTED DURING CONSTRUCTION.
3. REFER TO STRUCTURAL SHEET FOR STRUCTURES AND SHEET PILE DETAIL.
4. DES PLAINES RIVER ROAD AND MILWAUKEE ROAD FLOODWALL CENTERLINE STATIONING IS 202+00 TO 291+29.
5. CONTRACTOR SHALL ADEQUATELY PROTECT OPEN EXCAVATION FROM INTRUSION.
6. ROADWAY AND CURB/GUTTER. WITHIN THE WORKLIMITS. DAMAGE DUE TO CONSTRUCTION ACTIVITES SHALL BE RESTORED TO PRE-CONSTRUCTION GRADE AND CONDITIONS.
7. ALL TREES WITHIN THE WORKLIMITS NOT DESIGNATED TO BE REMOVED SHALL BE PROTECTED IN ACCORDANCE TO SECTION 02931 TREE PROTECTION. SEE SHEET C-42 FOR TREE PROTECTION DETAILS.
8. SEE SHEET C-42 FOR GRAVEL PATH TYP. SECTION.
9. 212.5 LF OF GUARDRAIL SHALL BE INSTALLED ALONG THE CURB STARTING AT STATION 276+82.4. GUARDRAIL START STATION AND LENGTH DOES NOT INCLUDE END TERMINALS. SEE C-42 FOR GUARDRAIL DETAILS.
10. TREES WITHOUT DBH SHOWN OR LISTED ARE TREES LESS THAN 8 INCHES DBH.
11. THE CONTRACTOR SHALL INSTALLED THE UNDERGROUND CONDUIT FROM THE EXISTING COM-ED TRANSFORMER BOX IN ACCORDANCE TO THE ELECTRICAL PLAN SHEET E-01 AND SECTION 16415 OF THE SPECIFICATIONS.

US Army Corps of Engineers
Chicago District

SYMBOL	AMENDMENT DESCRIPTION	DATE APPROVED	SYMBOL	DESCRIPTION	DATE APPROVED

DESIGNED BY: GA
DATE: 08-18-2008
DRAWN BY: GA
SCALE: AS SHOWN
CHECKED BY: JT
SOLICITATION NUMBER: W912P6-08-B-0003
DATE: 08-18-08
SUBMITTED BY: JOHN GROBOSKI, P.E.

U.S.ARMY ENGINEER DISTRICT
CORPS OF ENGINEERS
CHICAGO, ILLINOIS

DES PLAINES RIVER, ILLINOIS
LOCAL FLOOD PROTECTION
FLOODWALL 37
RIVER RD/MILWAUKEE AVE.
SITE PLAN
STA. 284+00 TO 291+29

SHEET REFERENCE NUMBER:
C-37
SHEET 46 OF 131

PLOT DATE: 8/18/2008
FILENAME: levee37-sht037.dgn

FLOODWALL CENTERLINE PROFILE

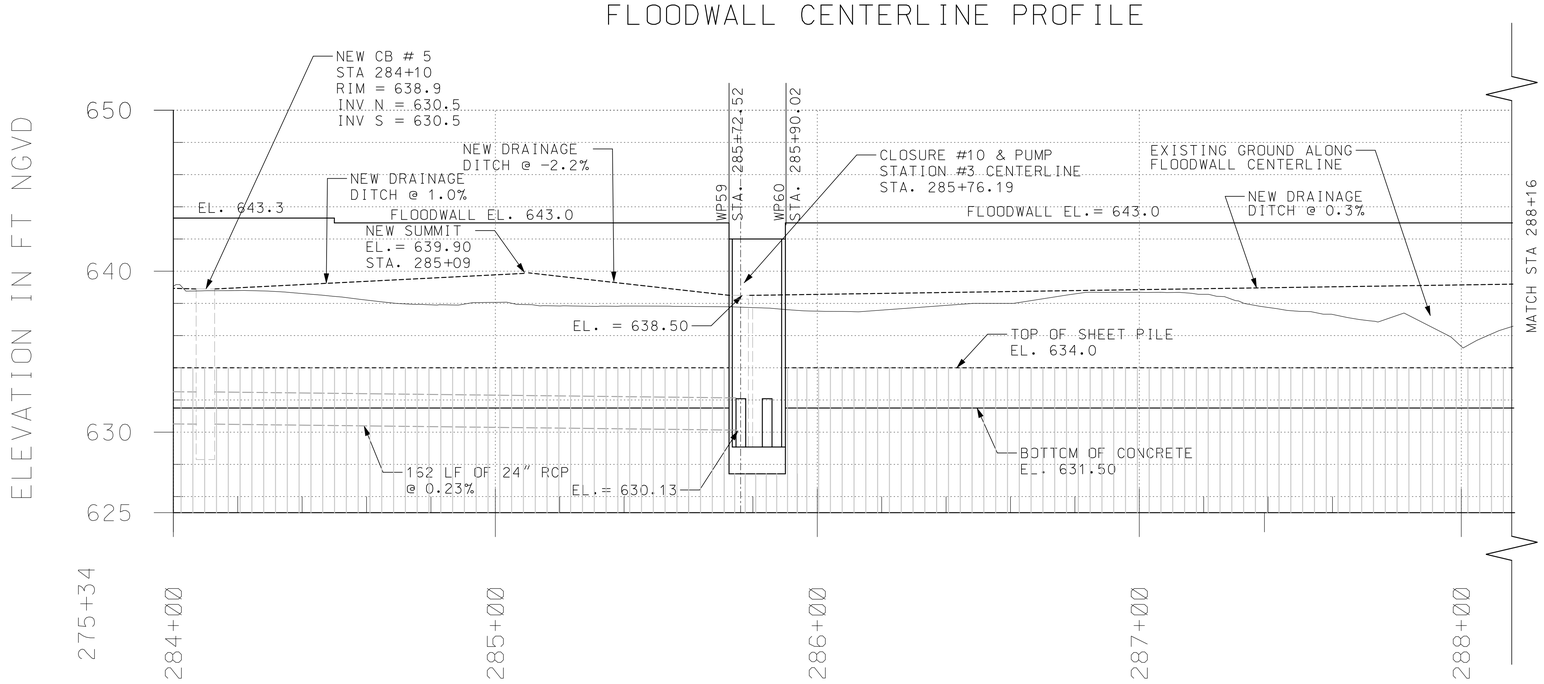

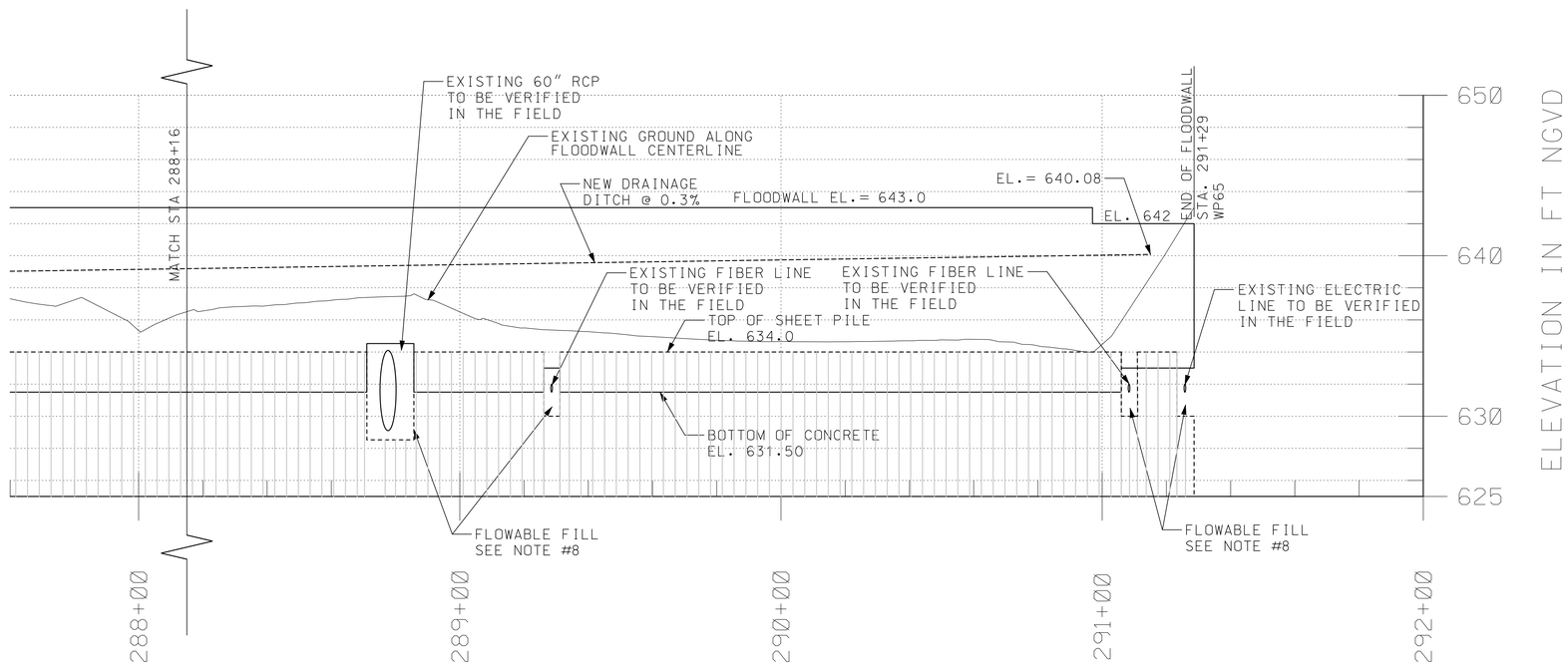

NOTES:

1. SEE SHEET G-03 FOR CONSTRUCTION NOTES.
2. REFER TO SHEET C-04 TO C-10 FOR UTILITY SURVEY. EXISTING UTILITIES NOT INDICATED TO BE REMOVED SHALL REMAIN IN PLACE AND PROTECTED DURING CONSTRUCTION.
3. REFER TO STRUCTURAL SHEET FOR STRUCTURES AND SHEET PILE DETAIL.
4. DES PLAINES RIVER ROAD AND MILWAUKEE ROAD FLOODWALL CENTERLINE STATIONING IS 202+00 TO 291+29.
5. CONTRACTOR SHALL ADEQUATELY PROTECT OPEN EXCAVATION FROM INTRUSION.
6. ROADWAY AND CURB/GUTTER, WITHIN THE WORKLIMITS, DAMAGE DUE TO CONSTRUCTION ACTIVITES SHALL BE RESTORED TO PRE-CONSTRUCTION GRADE AND CONDITIONS.
7. THE SHEET PILE WALL EXTENDS BELOW ELEV. 625. REFER TO STRUCTURAL SHEET S-01 TO S-04 FOR SHEET PILE BOTTOM ELEVATION.
8. CONTRACTOR SHALL TEMPORARY RE-ROUTE THE 60" RCP, FOCs, AND ELECTRIC LINE PRIOR TO SHEET PILE DRIVING. THE CONTRACTOR SHALL BACKFILL WITH FLOWABLE FILL IN ACCORDANCE TO SECTION 03300 CAST-IN-PLACE STRUCTURAL CONCRETE.

4 2 0 4 8
VERTICAL SCALE IN FEET

20 10 0 20 40
HORIZONTAL SCALE IN FEET

US Army Corps of Engineers
Chicago District

SYMBOL	AMENDMENT DESCRIPTION	DATE	APPROVED	SYMBOL	DESCRIPTION	DATE	APPROVED

DESIGNED BY: GA | DATE: 08-18-2008
DRAWN BY: GA | SCALE: AS SHOWN
CHECKED BY: JT | SOLICITATION NUMBER: W912P6-08-B-0003
JOHN GROBOSKI, P.E. 08-18-08
SUBMITTED BY: | DATE:

U.S. ARMY ENGINEER DISTRICT
CORPS OF ENGINEERS
CHICAGO, ILLINOIS

DES PLAINES RIVER, ILLINOIS
LOCAL FLOOD PROTECTION
FLOODWALL 37
RIVER RD/MILWAUKEE AVE.
PROFILE
STA. 284+00 TO 291+29

SHEET REFERENCE NUMBER:
C-37A
SHEET 47 OF 131

PLOT DATE: 8/18/2008
FILENAME: levee37-sht C37A.dgn

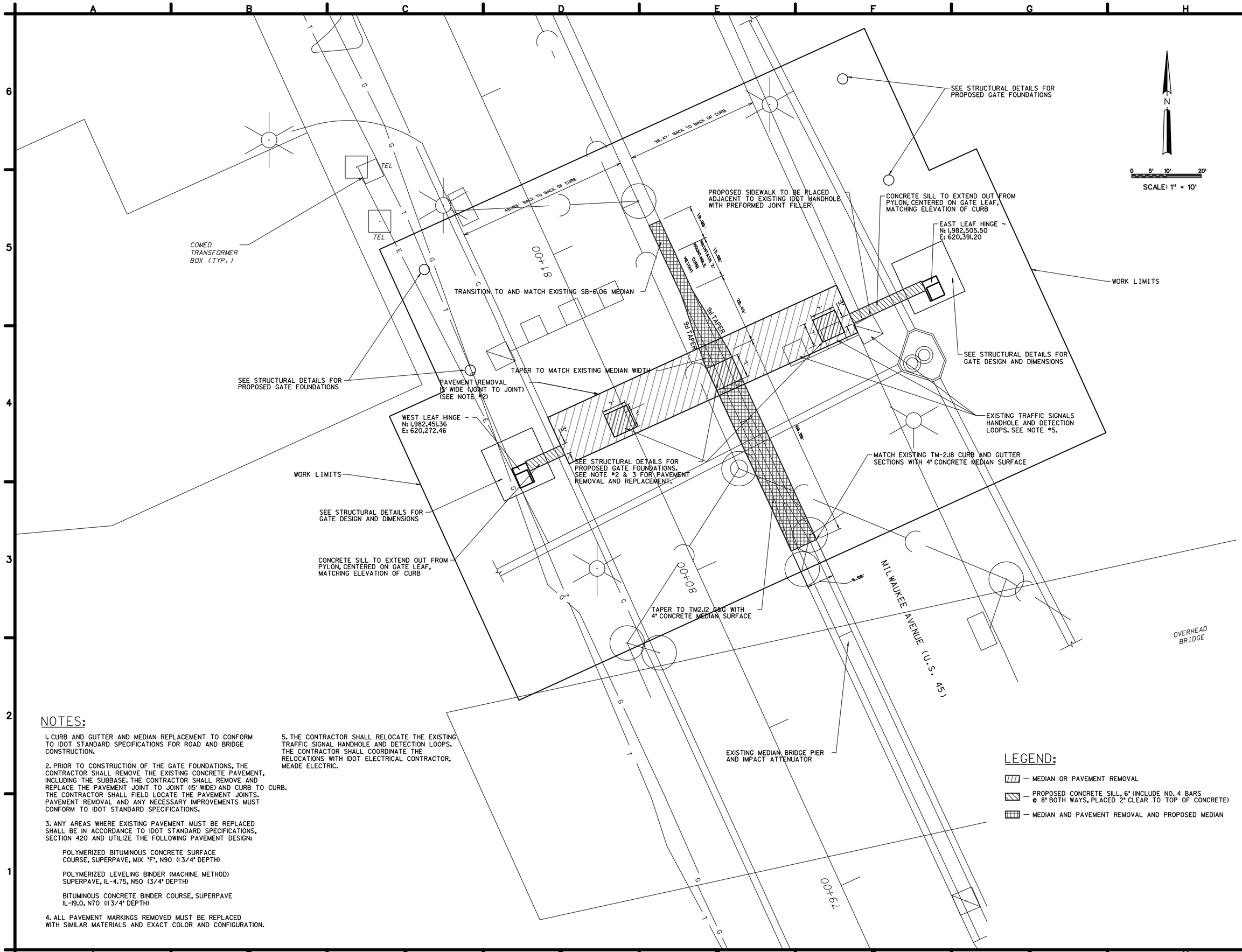

NOTES:

1. CURB AND GUTTER AND MEDIAN REPLACEMENT TO CONFORM TO IDOT STANDARD SPECIFICATIONS FOR ROAD AND BRIDGE CONSTRUCTION.

2. PRIOR TO CONSTRUCTION OF THE GATE FOUNDATIONS, THE CONTRACTOR SHALL REMOVE THE EXISTING CONCRETE PAVEMENT, INCLUDING THE SUBBASE. THE CONTRACTOR SHALL REMOVE AND REPLACE THE PAVEMENT JOINT TO JOINT (15' WIDE) AND CURB TO CURB. THE CONTRACTOR SHALL FIELD LOCATE THE PAVEMENT JOINTS. PAVEMENT REMOVAL AND ANY NECESSARY IMPROVEMENTS MUST CONFORM TO IDOT STANDARD SPECIFICATIONS.

3. ANY AREAS WHERE EXISTING PAVEMENT MUST BE REPLACED SHALL BE IN ACCORDANCE TO IDOT STANDARD SPECIFICATIONS, SECTION 420 AND UTILIZE THE FOLLOWING PAVEMENT DESIGN:

   POLYMERIZED BITUMINOUS CONCRETE SURFACE COURSE, SUPERPAVE, MIX "F", N90 (13/4" DEPTH)

   POLYMERIZED LEVELING BINDER (MACHINE METHOD) SUPERPAVE, IL-4.75, N50 (3/4" DEPTH)

   BITUMINOUS CONCRETE BINDER COURSE, SUPERPAVE IL-19.0, N70 (11 3/4" DEPTH)

4. ALL PAVEMENT MARKINGS REMOVED MUST BE REPLACED WITH SIMILAR MATERIALS AND EXACT COLOR AND CONFIGURATION.

5. THE CONTRACTOR SHALL RELOCATE THE EXISTING TRAFFIC SIGNAL HANDHOLE AND DETECTION LOOPS. THE CONTRACTOR SHALL COORDINATE THE RELOCATIONS WITH IDOT ELECTRICAL CONTRACTOR, MEADE ELECTRIC.

LEGEND:

- MEDIAN OR PAVEMENT REMOVAL
- PROPOSED CONCRETE SILL, 6" (INCLUDE NO. 4 BARS @ 8" BOTH WAYS, PLACED 2" CLEAR TO TOP OF CONCRETE)
- MEDIAN AND PAVEMENT REMOVAL AND PROPOSED MEDIAN

US ARMY CORPS OF ENGINEERS
Chicago District

SYMBOL	AMENDMENT DESCRIPTION	DATE APPROVED SYMBOL	DESCRIPTION	DATE APPROVED

DESIGNED BY: MSC
DATE: 08-18-2008
DRAWN BY: MSC
SCALE: 1" = 10'
CHECKED BY: DRH
CONTRACT NUMBER: W912P6-08-B-0003
SUBMITTED BY:
DATE:

U.S. ARMY ENGINEER DISTRICT
CORPS OF ENGINEERS
CHICAGO, ILLINOIS

CTE AECOM
303 East Wacker Drive, Suite 600, Chicago, Illinois 60601-5276
T 312.373.6000 F 312.373.6799 www.aecom.com

DES PLAINES RIVER, ILLINOIS
LOCAL FLOOD PROTECTION
FLOODWALL 37
RIVER RD/MILWAUKEE AVE.
MILWAUKEE AVENUE FLOOD GATE
CLOSURE STRUCTURE
DEMOLITION/PROPOSED SITE PLAN

SHEET REFERENCE NUMBER:
C-38
SHEET 48 OF 131

PLOT DATE: 8/18/2008
FILENAME: $FILE$

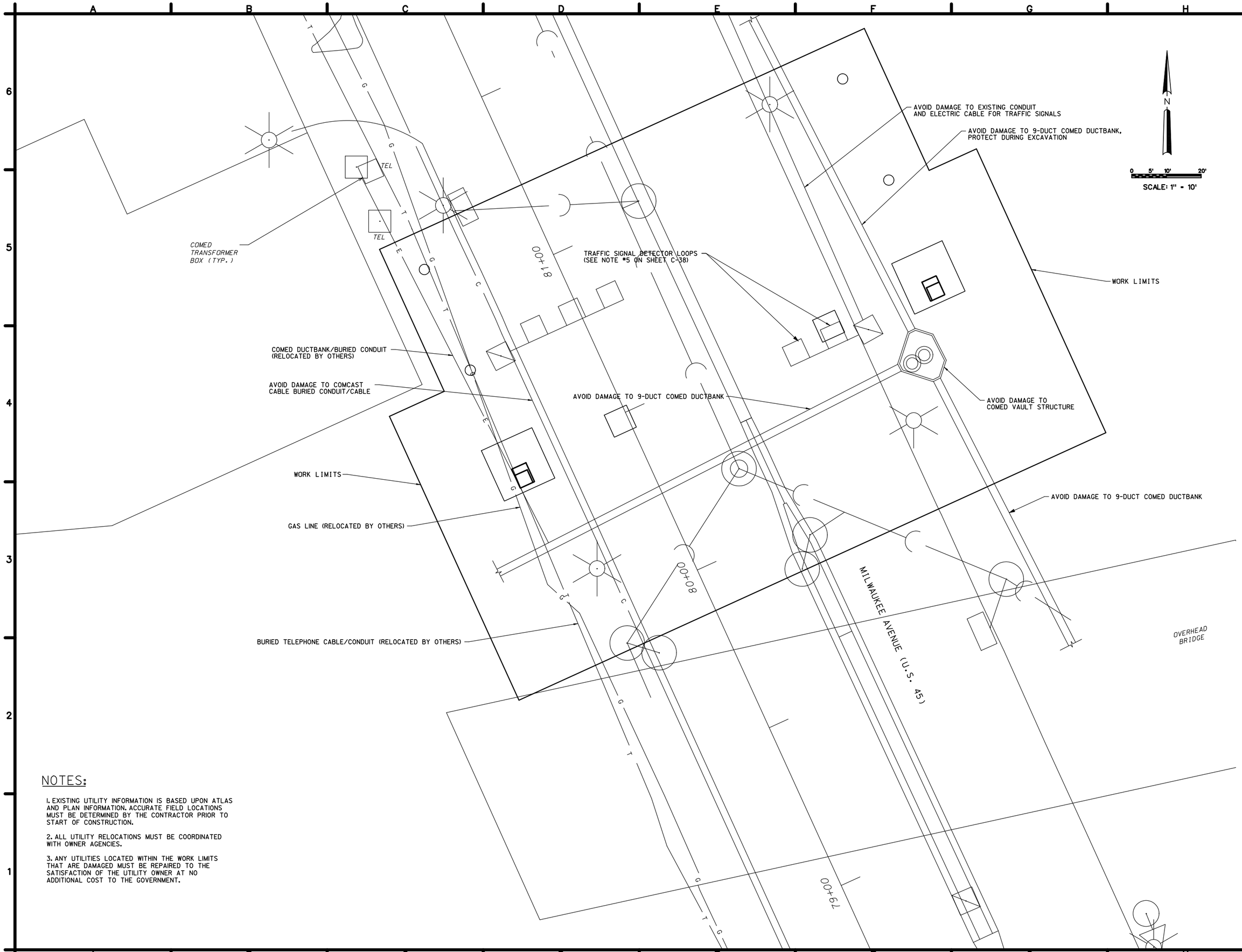

NOTES:

1. EXISTING UTILITY INFORMATION IS BASED UPON ATLAS AND PLAN INFORMATION. ACCURATE FIELD LOCATIONS MUST BE DETERMINED BY THE CONTRACTOR PRIOR TO START OF CONSTRUCTION.

2. ALL UTILITY RELOCATIONS MUST BE COORDINATED WITH OWNER AGENCIES.

3. ANY UTILITIES LOCATED WITHIN THE WORK LIMITS THAT ARE DAMAGED MUST BE REPAIRED TO THE SATISFACTION OF THE UTILITY OWNER AT NO ADDITIONAL COST TO THE GOVERNMENT.

US ARMY CORPS OF ENGINEERS
Chicago District

SYMBOL	AMENDMENT DESCRIPTION	DATE	APPROVED	SYMBOL	DESCRIPTION	DATE	APPROVED

DESIGNED BY: MSC
DATE: 08-18-2008
DRAWN BY: MSC
SCALE: 1" = 10'
CHECKED BY: DRH
CONTRACT NUMBER: W912P6-08-B-0003
SUBMITTED BY:
DATE:

U.S. ARMY ENGINEER DISTRICT
CORPS OF ENGINEERS
CHICAGO, ILLINOIS

CTE | AECOM
303 East Wacker Drive, Suite 600, Chicago, Illinois 60601-5276
T 312.938.0300 F 312.938.1109 www.cte.aecom.com

DES PLAINES RIVER, ILLINOIS
LOCAL FLOOD PROTECTION
FLOODWALL 37
RIVER RD/MILWAUKEE AVE.
MILWAUKEE AVENUE FLOOD GATE
CLOSURE STRUCTURE
UTILITY RELOCATION PLAN

SHEET REFERENCE NUMBER:
C-38A
SHEET 49 OF 131

PLOT DATE: 8/18/2008
FILENAME: $FILE$

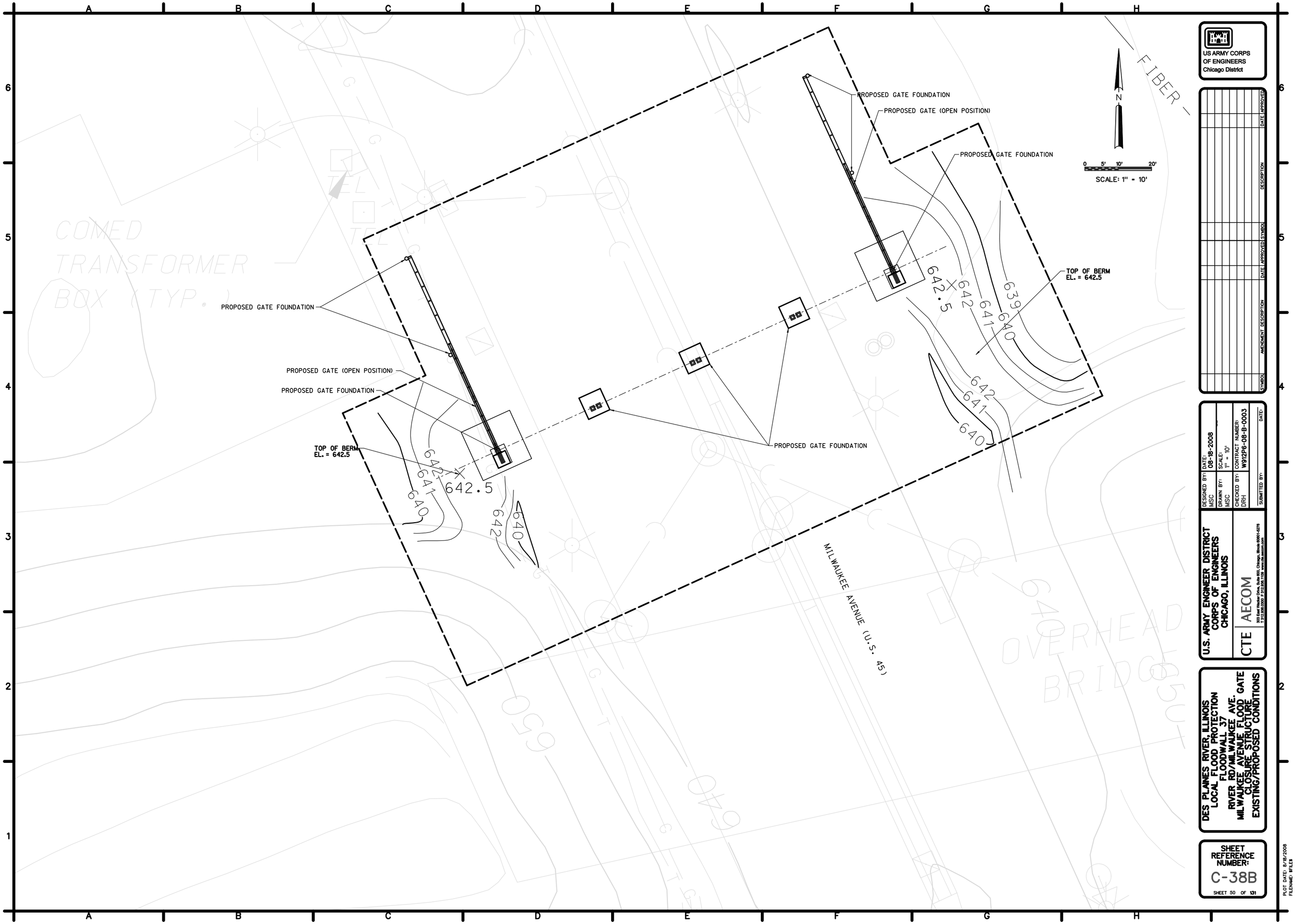

US ARMY CORPS
OF ENGINEERS
Chicago District

SYMBOL	AMENDMENT DESCRIPTION	DATE	APPROVED	SYMBOL	DESCRIPTION	DATE	APPROVED

DESIGNED BY: MSC
DATE: 08-18-2008
DRAWN BY: MSC
SCALE: 1" = 10'
CHECKED BY: DRH
CONTRACT NUMBER: W912P6-08-B-0003
SUBMITTED BY:
DATE:

U.S. ARMY ENGINEER DISTRICT
CORPS OF ENGINEERS
CHICAGO, ILLINOIS

CTE AECOM
303 East Wacker Drive, Suite 600, Chicago, Illinois 60601-5276
T 312.938.0300 F 312.938.1109 www.cte.aecom.com

DES PLAINES RIVER, ILLINOIS
LOCAL FLOOD PROTECTION
FLOODWALL 37
RIVER RD/MILWAUKEE AVE.
MILWAUKEE AVENUE FLOOD GATE
CLOSURE STRUCTURE
EXISTING/PROPOSED CONDITIONS

SHEET REFERENCE NUMBER:
C-38B
SHEET 50 OF 131

PLOT DATE: 8/18/2008
FILENAME: $FILE$

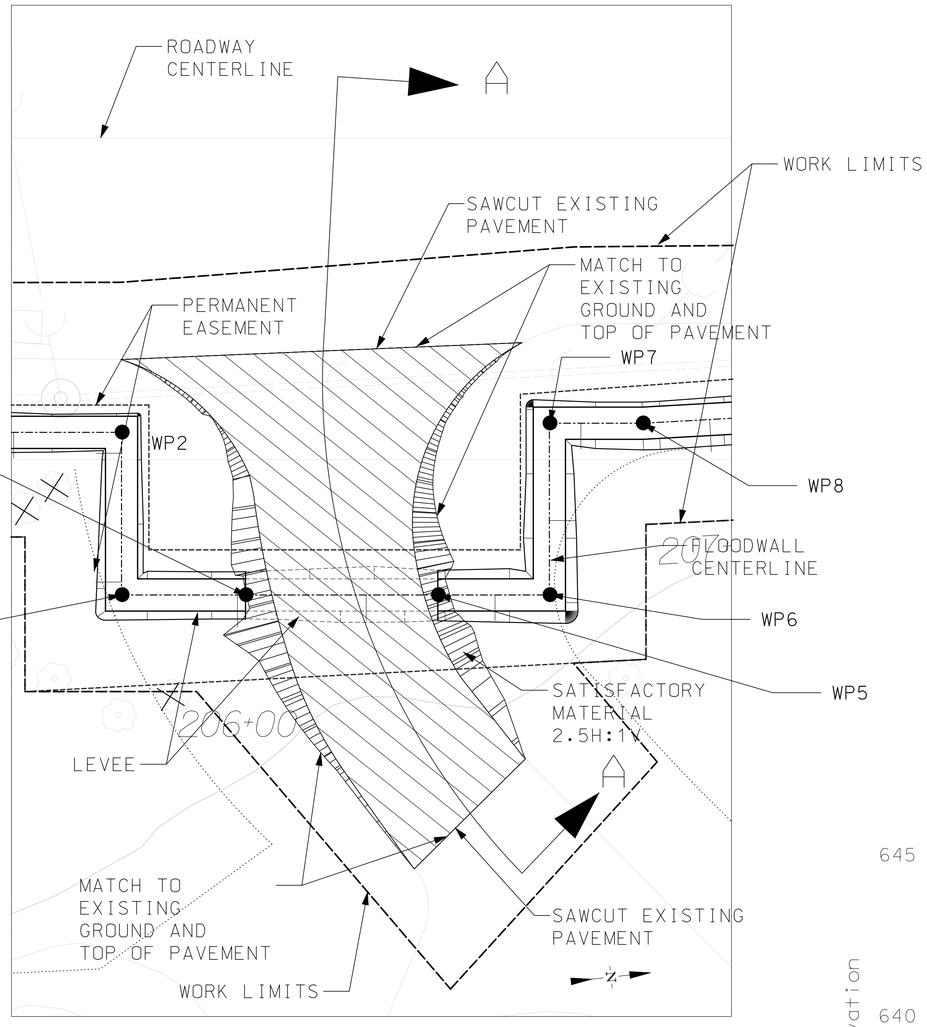

DRIVE # 1 PLAN

10 5 0 10 20
SCALE IN FEET

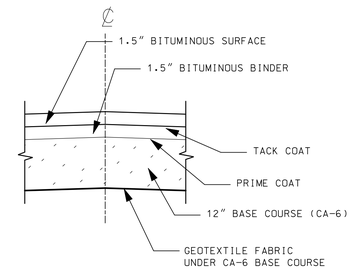

BITUMINOUS PAVEMENT DRIVEWAY CREST

N.T.S.

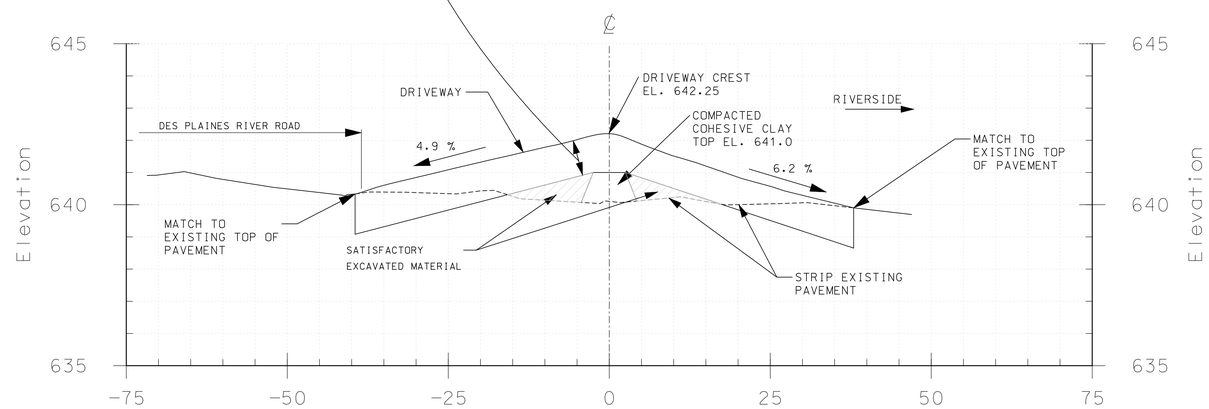

DRIVE # 1 SECTION A-A
STA. 206+19

2 1 0 2 4
VERTICAL SCALE IN FEET

10 5 0 10 20
HORIZONTAL SCALE IN FEET

NOTES:

1. EXISTING CURB ALONG BOTH EDGES OF THE DRIVEWAY SHALL BE REPLACED WITH NEW CURB. SEE C-40 TYP. CURB DETAIL.
2. CONTRACTOR SHALL PROVIDE NEAT SAWCUT AT LIMITS OF PAVEMENT REMOVAL AS INDICATED. PAVEMENT SAWCUT AND CONNECTION OF NEW AND OLD PAVEMENT SHALL BE IN ACCORDANCE TO IDOT REQUIREMENTS.
3. PAVEMENT STRIPING SHALL BE IN ACCORDANCE TO SECTION 02741 BITUMINOUS CONCRETE PAVEMENT.

US Army Corps of Engineers
Chicago District

SYMBOL	AMENDMENT DESCRIPTION	DATE APPROVED	SYMBOL	DESCRIPTION	DATE APPROVED

DESIGNED BY: GA
DATE: 08-18-2008
DRAWN BY: GA
SCALE: AS SHOWN
CHECKED BY: JT
SOLICITATION NUMBER: W912P6-08-B-0003
SUBMITTED BY: JOHN GROBOSKI, P.E.
DATE: 08-18-08

U.S.ARMY ENGINEER DISTRICT
CORPS OF ENGINEERS
CHICAGO, ILLINOIS

DES PLAINES RIVER, ILLINOIS
LOCAL FLOOD PROTECTION
FLOODWALL 37
RIVER RD/MILWAUKEE AVE.
DRIVEWAY #1 PLAN, CROSS SECTION AND DETAIL

SHEET REFERENCE NUMBER:
C-39
SHEET 51 OF 131

PLOT DATE: 8/18/2008
FILENAME: levee37-sht039.dgn

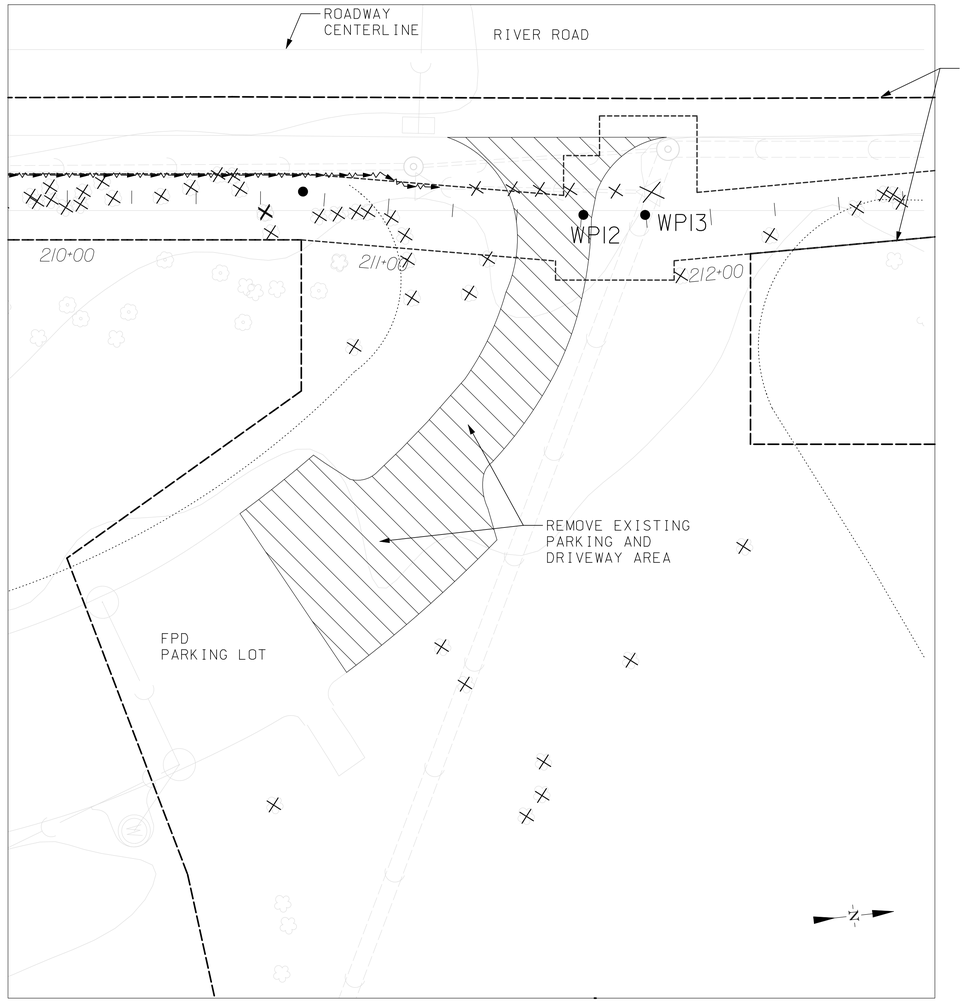

EXISTING CONDITION AND DEMOLITION PLAN

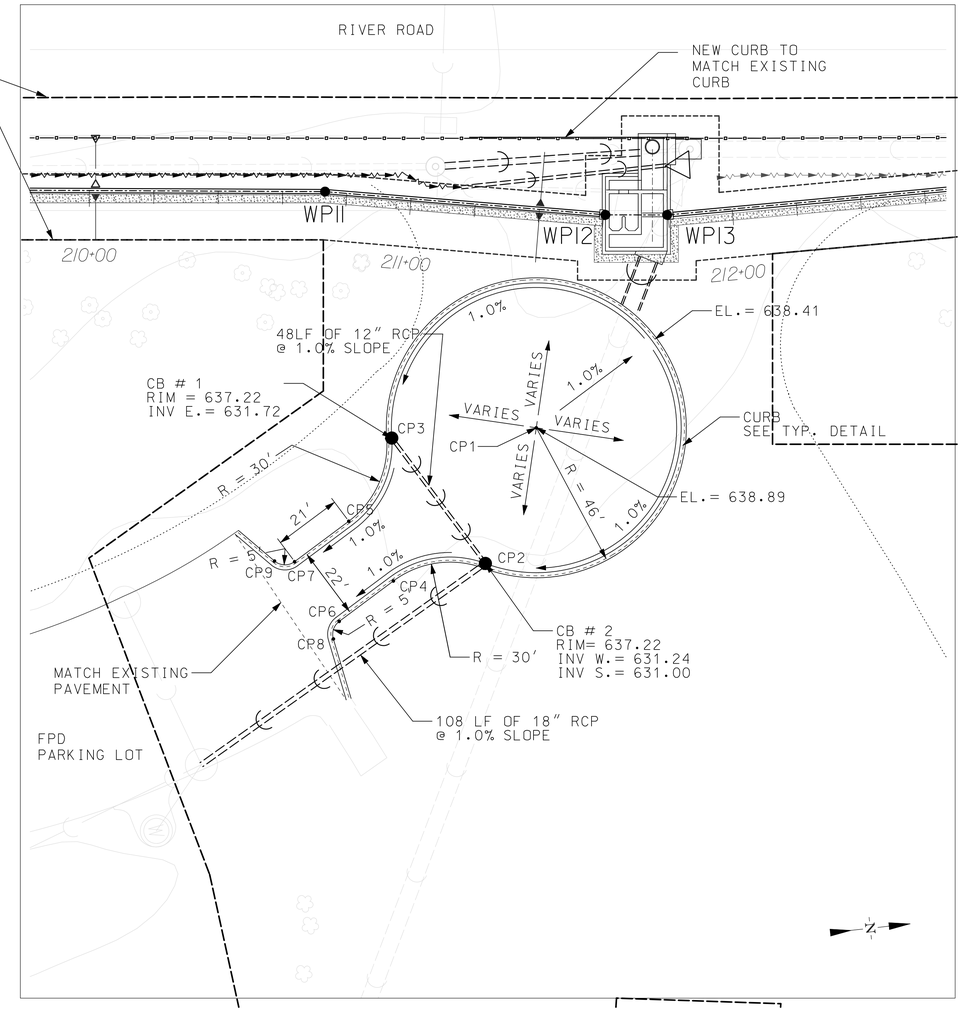

PROPOSED TURN AROUND

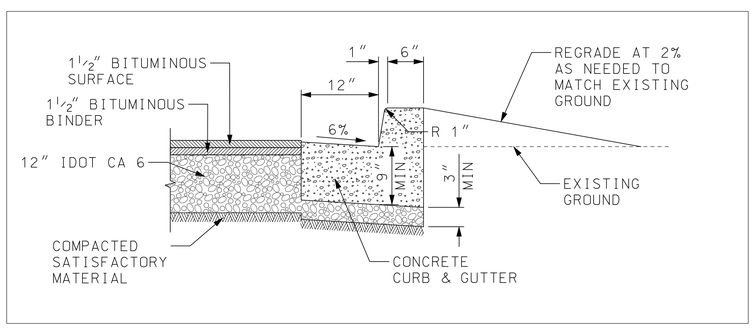

TYP. PAVEMENT AND CURB & GUTTER DETAIL

N.T.S.

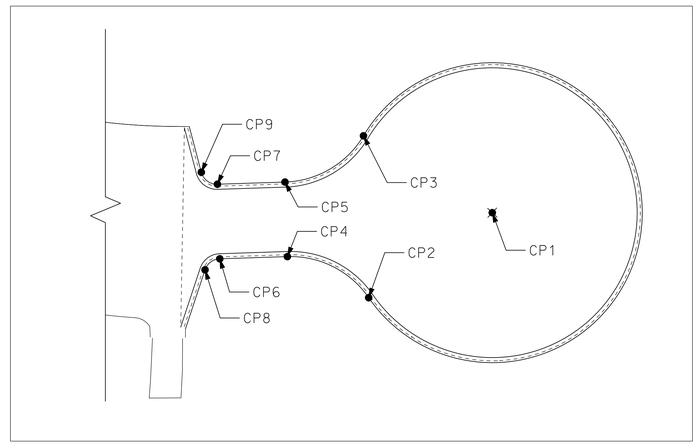

PROPOSED TURN AROUND CONTROL POINT LAYOUT

N.T.S.

CONTROL POINTS		
CP	NORTHING	EASTING
CP1	1975822.26	620059.77
CP2	1975801.21	620101.33
CP3	1975775.72	620057.96
CP4	1975772.93	620102.21
CP5	1975761.19	620082.24
CP6	1975754.82	620112.85
CP7	1975743.08	620092.88
CP8	1975752.44	620118.05
CP9	1975736.91	620092.00

US Army Corps of Engineers Chicago District

SYMBOL	AMENDMENT DESCRIPTION	DATE	APPROVED	SYMBOL	DESCRIPTION	DATE	APPROVED

DESIGNED BY: GA DATE: 08-18-2008
DRAWN BY: GA SCALE: AS SHOWN
CHECKED BY: JT SOLICITATION NUMBER: W912P6-08-B-0003
JOHN GROBOSKI, P.E. 08-18-08
SUBMITTED BY: DATE:

U.S.ARMY ENGINEER DISTRICT
CORPS OF ENGINEERS
CHICAGO, ILLINOIS

DES PLAINES RIVER, ILLINOIS
LOCAL FLOOD PROTECTION
FLOODWALL 37
RIVER RD/MILWAUKEE AVE.

DRIVEWAY # 2 DEMOLITION AND TURN AROUND DETAIL

SHEET REFERENCE NUMBER:
C-40
SHEET 52 OF 131

PLOT DATE: 8/18/2008
FILENAME: levee37-shtC40.dgn

RIPRAP DATA FOR EROSION PROTECTION AT CLOSURE OUTLETS					
STRUCTURE	IDOT GRADATION •	THICKNESS (FT)	LENGTH OF APRON, L (FT)	DEPTH OF SCOUR HOLE, D (FT)	WIDTH OF APRON, W (FT)
CLOSURE •2 (SEE DETAIL)	5	2.5	10	NA	10
CLOSURE • 3	5	2.5	20	NA	6
CLOSURE • 4	5	2.5	20	NA	6
CLOSURE •5 (SEE DETAIL)	5	2.5	NA	2.5	SEE DETAIL
BACKFLOW STRUCT. • 1	5	2.5	40	NA	27
CLOSURE • 6 & 7	5	2.5	40	NA	40
CLOSURE • 8	5	2.5	25	NA	15
CLOSURE • 9	5	2.5	25	NA	15
PUMP STATION •2	5	2.5	15	NA	18

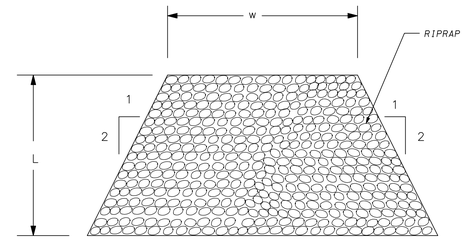

PLAN VIEW OF TYPICAL RIPRAP BEDDING

N.T.S.

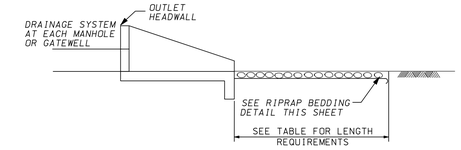

TYPICAL RIPRAP BEDDING DETAIL

N.T.S.

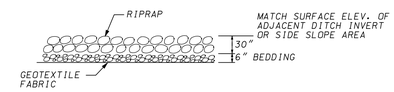

TYPICAL RIPRAP BEDDING DETAIL

N.T.S.

TYP. RIPRAP DETAILS @ OUTLETS

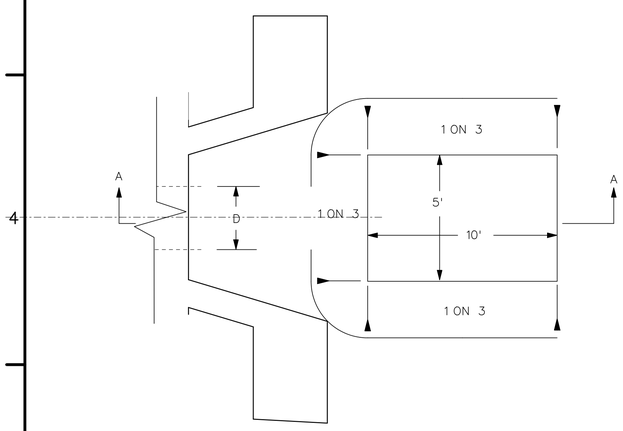

PREFORMED SCOUR HOLE PLAN VIEW

N.T.S.

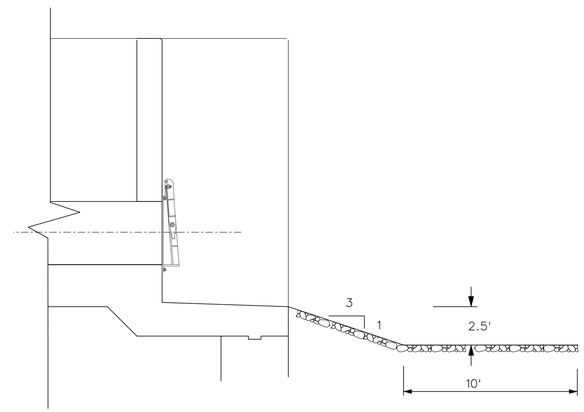

PREFORMED SCOUR HOLE SECTION A-A

N.T.S.

RIPRAP DETAILS @ CLOSURE #5

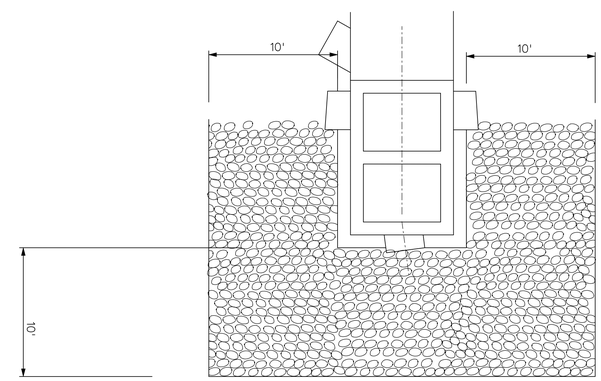

RIPRAP DETAILS @ CLOSURE #2

N.T.S.

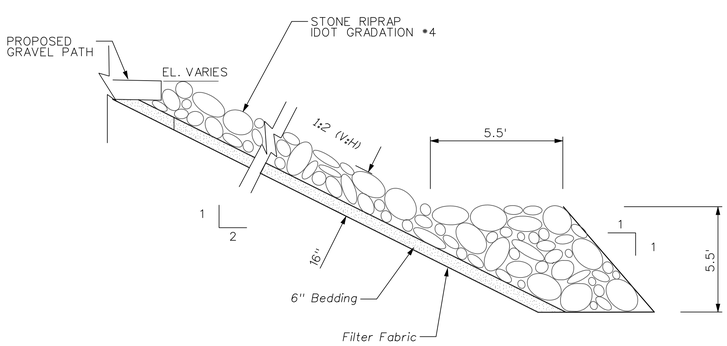

RIPRAP REVETMENT TOE PROTECTION

N.T.S.

TYP. RIPRAP DETAILS @ FLOODWALL STA. 270+87 TO 277+67

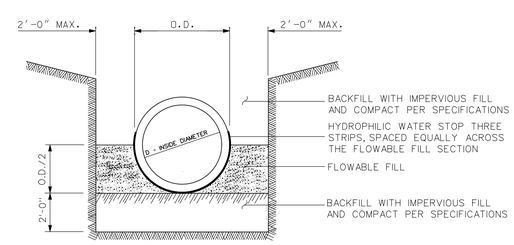

PIPE PASSING UNDER IMPERVIOUS MATERIAL

N.T.S.

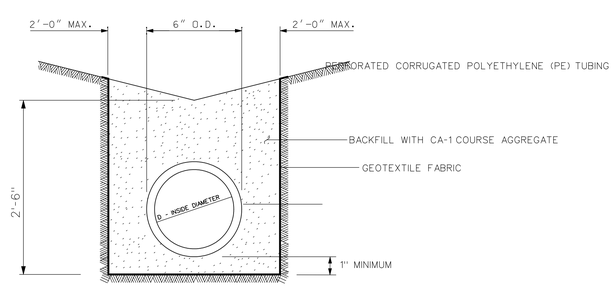

TYPICAL UNDERDRAIN DETAIL

N.T.S.

US Army Corps of Engineers
Chicago District

SYMBOL	AMENDMENT DESCRIPTION	DATE APPROVED	SYMBOL	DESCRIPTION	DATE APPROVED

DESIGNED BY: GA
DATE: 08-18-2008
DRAWN BY: GA
SCALE: AS SHOWN
CHECKED BY: JT
SOLICITATION NUMBER: W912P6-08-B-0003
SUBMITTED BY: JOHN GROBOSKI, P.E.
DATE: 08-18-08

U.S. ARMY ENGINEER DISTRICT
CORPS OF ENGINEERS
CHICAGO, ILLINOIS

DES PLAINES RIVER, ILLINOIS
LOCAL FLOOD PROTECTION
FLOODWALL 37
RIVER RD/MILWAUKEE AVE.
DETAILS AND
TYPICAL CROSS SECTIONS

SHEET REFERENCE NUMBER:
C-41

SHEET 53 OF 131

PLOT DATE: 8/18/2008
FILENAME: lkrwb37-stnC41.dgn

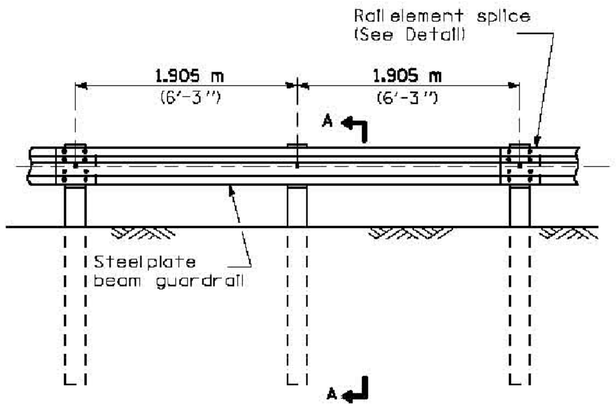

ELEVATION

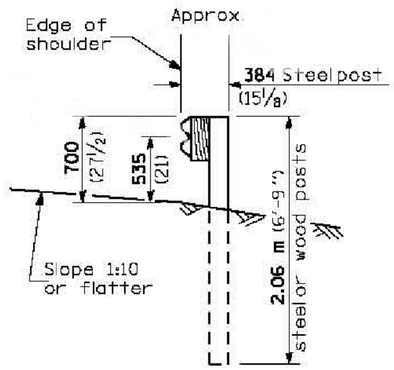

SECTION A-A

TYPE A

1.905 m (6'-3") Typical post spacing

N.T.S

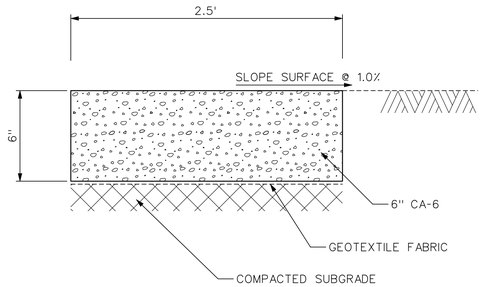

GRAVEL PATH TYP. SECTION

N.T.S

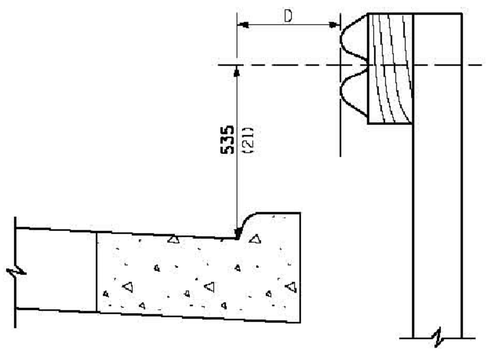

NOTE

If it is necessary for D to be more than **300** (12) and less than **3.0 m** (10'-0") type **M-5** (M-2) curb and gutter (Std. 606001) shall be used in front of and in advance of the guardrail.

GUARDRAIL PLACED BEHIND CURB

(D = 0 desirable to **300** (12) maximum)

N.T.S

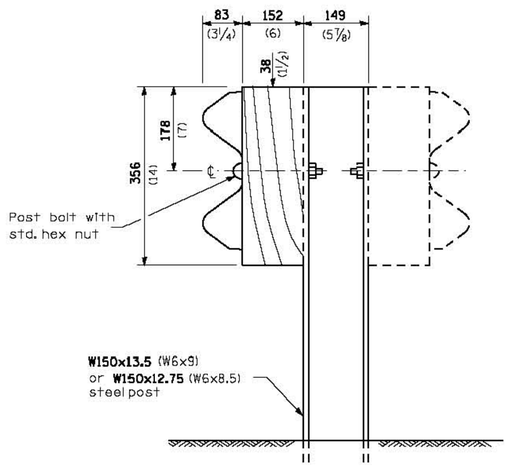

STEEL POST CONSTRUCTION

N.T.S

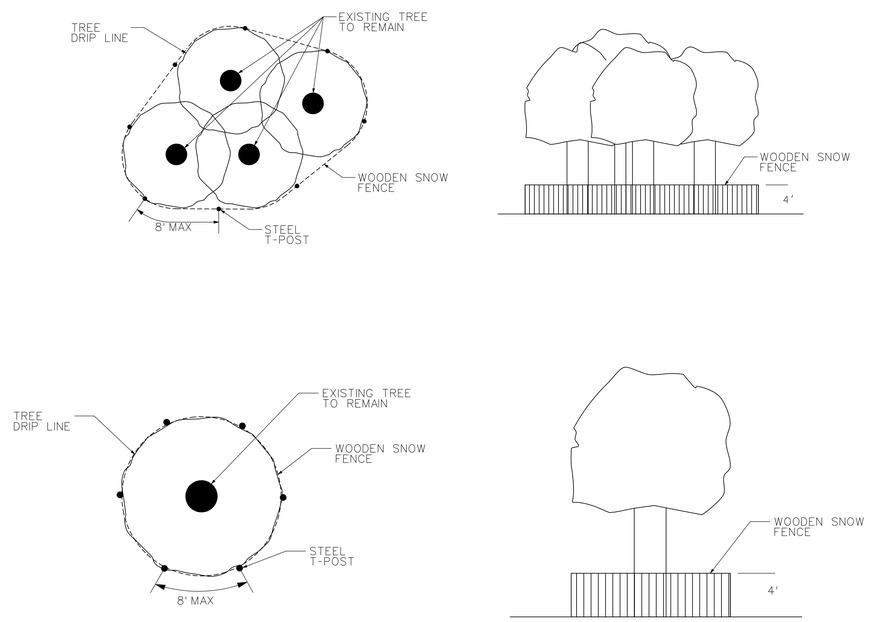

TREE PROTECTION DETAIL

N.T.S

NOTE:

1. TYPE A GUARDRAIL AND STEEL POST SHALL BE USED AND INSTALLED IN ACCORDANCE TO IDOT STANDARD AND SPECIFICATION. IN THE DIRECTION OF TRAVEL, FIRST GUARDRAIL TERMINAL SHALL BE IDOT TYPE 1 SPECIAL AND IDOT TYPE 2 FOR OTHER END.
2. ALL GUARDRAIL DETAIL DIMENSIONS ARE IN MILLIMETERS (INCHES).
3. REFER TO IDOT STANDARD SPECIFICATION FOR ROAD AND BRIDGE CONSTRUCTION (STANDARD 630001-02) FOR ADDITIONAL GUARDRAIL DETAILS.
4. REMOVING AND RELOCATING EXISTING GUARDRAIL AND TERMINALS SHALL BE IN ACCORDANCE TO IDOT STANDARD SPECIFICATION, SECTION 633.

US Army Corps of Engineers
Chicago District

SYMBOL	AMENDMENT DESCRIPTION	DATE APPROVED	SYMBOL	DESCRIPTION	DATE APPROVED

DESIGNED BY: GA — DATE: 08-18-2008
DRAWN BY: GA — SCALE: AS SHOWN
CHECKED BY: JT — SOLICITATION NUMBER: W912P6-08-B-0003
SUBMITTED BY: JOHN GROBOSKI, P.E. 08-18-08 — DATE:

U.S. ARMY ENGINEER DISTRICT
CORPS OF ENGINEERS
CHICAGO, ILLINOIS

DES PLAINES RIVER, ILLINOIS
LOCAL FLOOD PROTECTION
FLOODWALL 37
RIVER RD/MILWAUKEE AVE.
GRAVEL PATH SECTION,
TREE PROTECTION AND
GAURDRAIL DETAILS

SHEET REFERENCE NUMBER:
C-42
SHEET 54 OF 131

PLOT DATE: 8/18/2008
FILENAME: lrve37-sht042.dgn

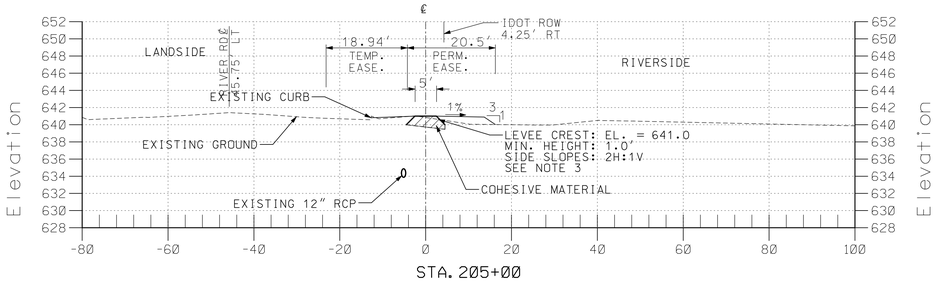

STA. 205+00

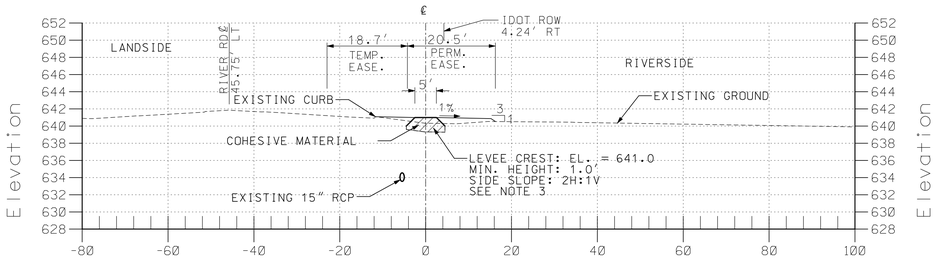

STA. 204+00

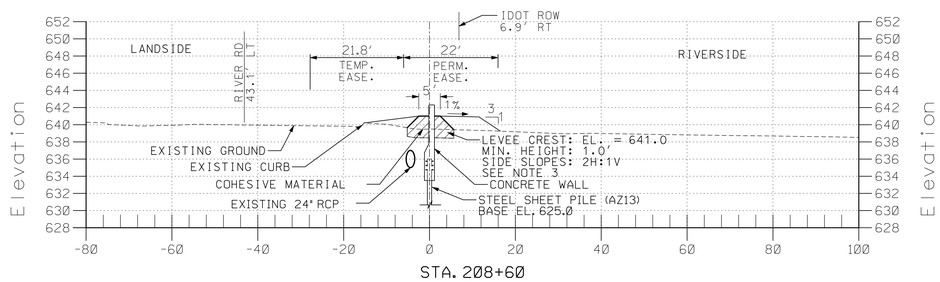

STA. 208+60

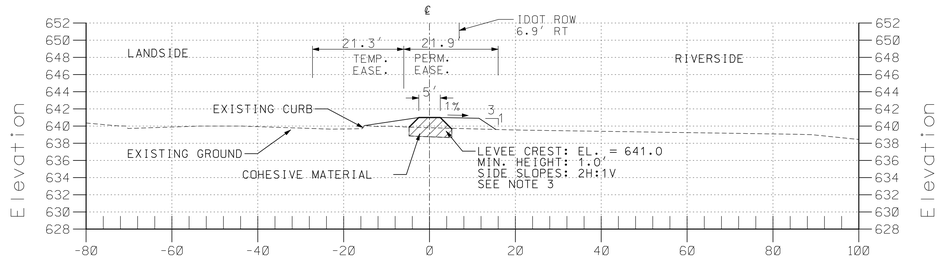

STA. 208+00

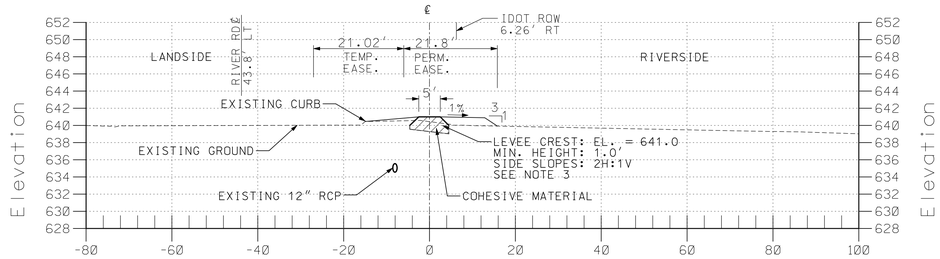

STA. 207+00

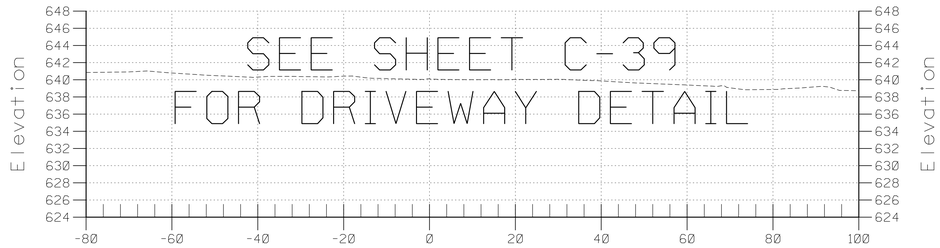

STA. 206+19

NOTES:

1. REFER TO C-42 FOR GRAVEL PATH DETAIL.
2. REFER TO STRUCTURAL SHEETS FOR STRUCTURES AND FLOODWALL DETAILS.
3. THE EXISTING GRADE SHALL BE STRIPPED 1 FT (MIN.), PRIOR TO LEVEE PLACEMENT.
4. CONTRACTOR SHALL PLACE SATISFACTORY FILL AS NEED TO ACHIEVE PROPOSAL GRADE AS SHOWN ON CROSS-SECTION.

15 0 15 30
1 INCH = 15 FEET
HORIZONTAL SCALE

7.5 0 7.5 15
1 INCH = 7.5 FEET
VERTICAL SCALE

US Army Corps of Engineers
Chicago District

SYMBOL	AMENDMENT DESCRIPTION	DATE APPROVED	SYMBOL	DESCRIPTION	DATE APPROVED

DESIGNED BY: GA
DATE: 08-18-2008
DRAWN BY: GA
SCALE: AS SHOWN
CHECKED BY: JT
SOLICITATION NUMBER: W912P6-08-B-0003
SUBMITTED BY: JOHN GROBOSKI, P.E.
DATE: 08-18-08

U.S. ARMY ENGINEER DISTRICT
CORPS OF ENGINEERS
CHICAGO, ILLINOIS

DES PLAINES RIVER, ILLINOIS
LOCAL FLOOD PROTECTION
FLOODWALL 37
RIVER RD/MILWAUKEE AVE.

CROSS-SECTION
STA. 204+00 TO 208+60

SHEET REFERENCE NUMBER:
C-43
SHEET 55 OF 131

PLOT DATE: 8/18/2008
FILENAME: levee37-sht043.dgn

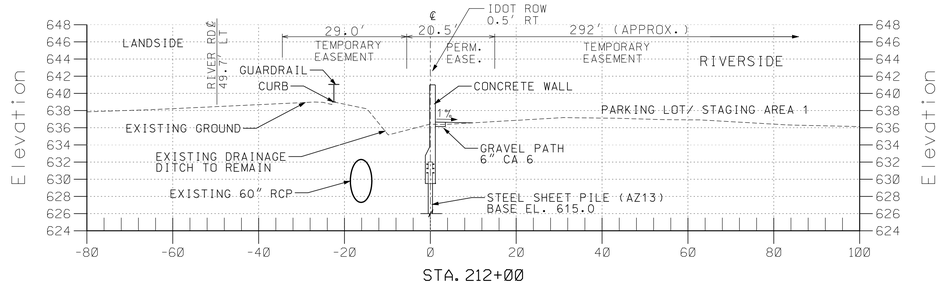

STA. 212+00

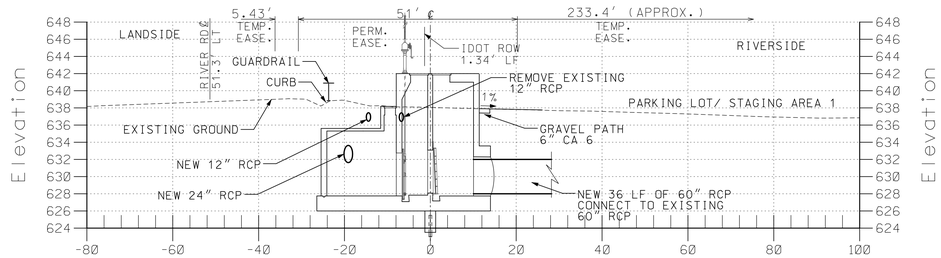

PUMPSTATION #1 AND CLOSURE #1
STA. 211+75

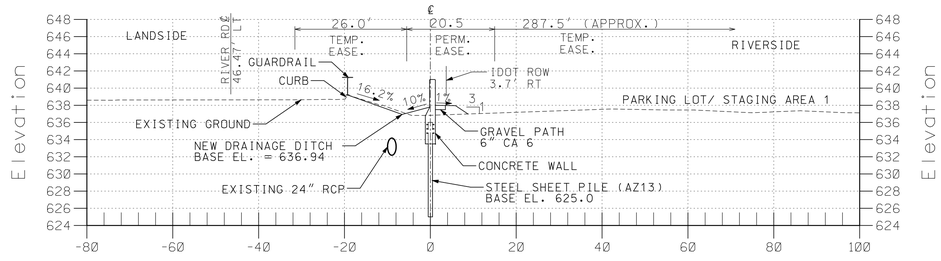

STA. 211+00

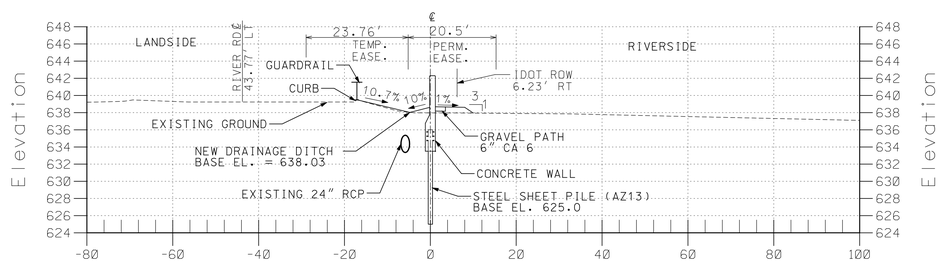

STA. 210+00

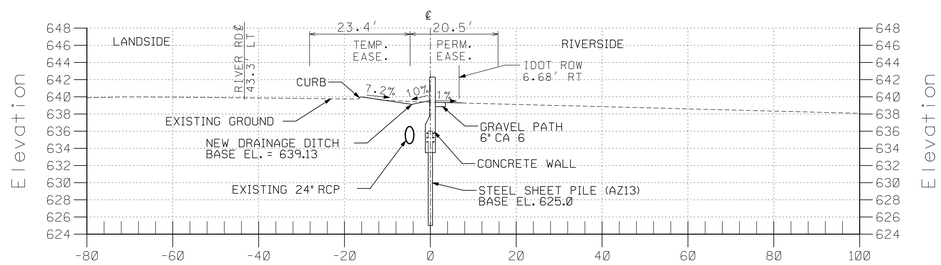

STA. 209+00

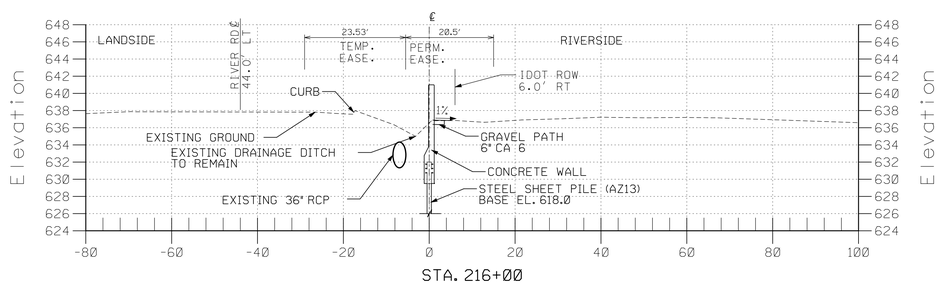

STA. 216+00

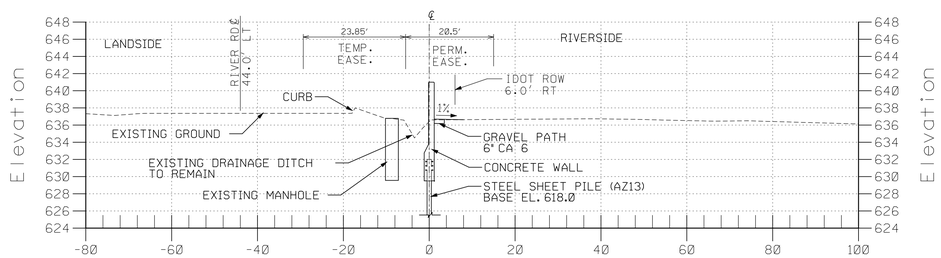

STA. 215+00

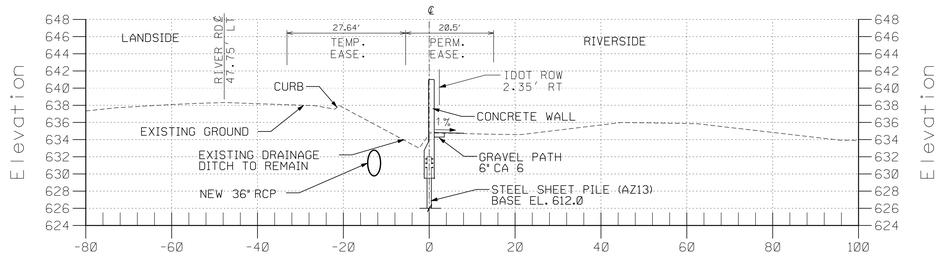

STA. 214+00

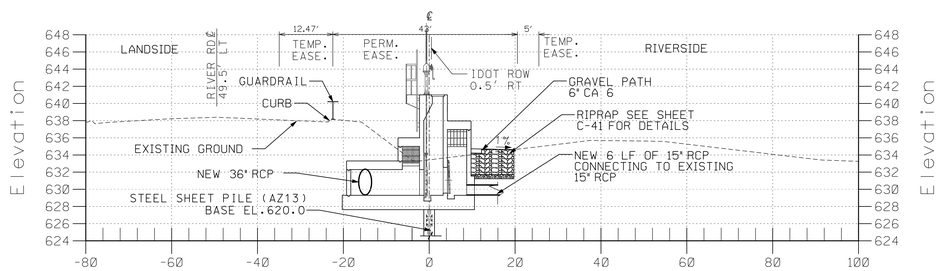

CLOSURE #2
STA. 213+68

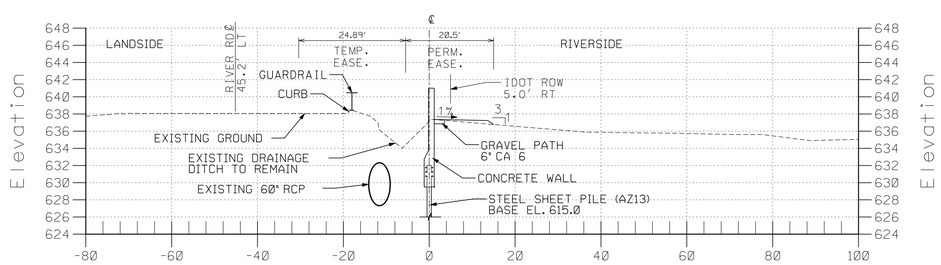

STA. 213+00

15 0 15 30
1 INCH = 15 FEET
HORIZONTAL SCALE

7.5 0 7.5 15
1 INCH = 7.5 FEET
VERTICAL SCALE

NOTES:

1. REFER TO C-42 FOR GRAVEL PATH DETAIL.
2. REFER TO STRUCTURAL SHEETS FOR STRUCTURES AND FLOODWALL DETAILS.
3. PLACE RIPRAP TO MEET EXISTING GROUND.
4. CONTRACTOR SHALL PLACE SATISFACTORY FILL AS NEED TO ACHIEVE PROPOSAL GRADE AS SHOWN ON CROSS-SECTION.

US Army Corps of Engineers
Chicago District

SYMBOL	AMENDMENT DESCRIPTION	DATE APPROVED	SYMBOL	DESCRIPTION	DATE APPROVED

DESIGNED BY: GA | DATE: 08-18-2008
DRAWN BY: GA | SCALE: AS SHOWN
CHECKED BY: JT | SOLICITATION NUMBER: W912P6-08-B-0003
JOHN GROBOSKI, P.E. | DATE:
SUBMITTED BY:

U.S. ARMY ENGINEER DISTRICT
CORPS OF ENGINEERS
CHICAGO, ILLINOIS

DES PLAINES RIVER, ILLINOIS
LOCAL FLOOD PROTECTION
FLOODWALL 37
RIVER RD/MILWAUKEE AVE.
CROSS-SECTION
STA. 209+00 TO 216+00

SHEET REFERENCE NUMBER:
C-44
SHEET 56 OF 131

PLOT DATE: 8/18/2008
FILENAME: lrwa37-sht-C44.dgn

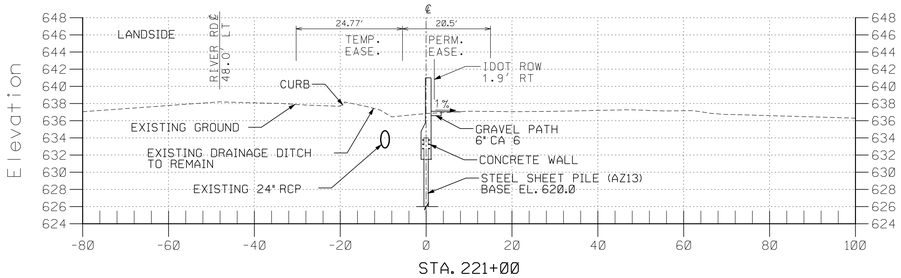

STA. 221+00

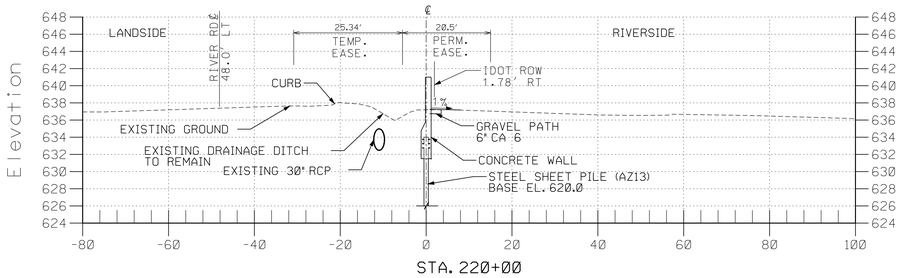

STA. 220+00

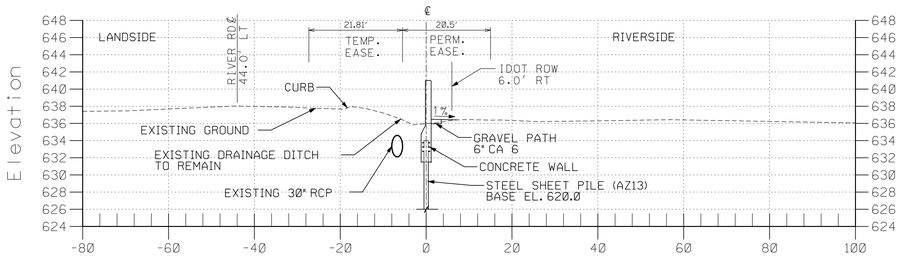

STA. 219+00

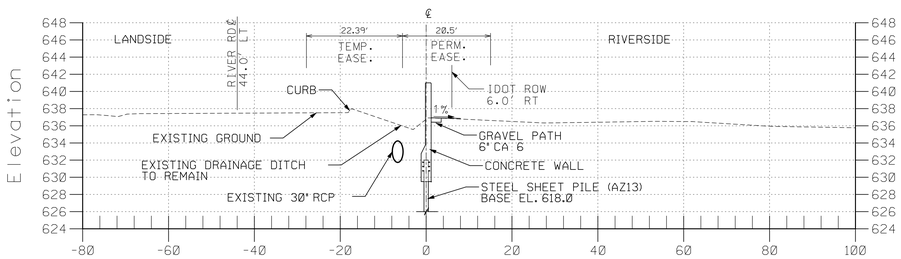

STA. 218+00

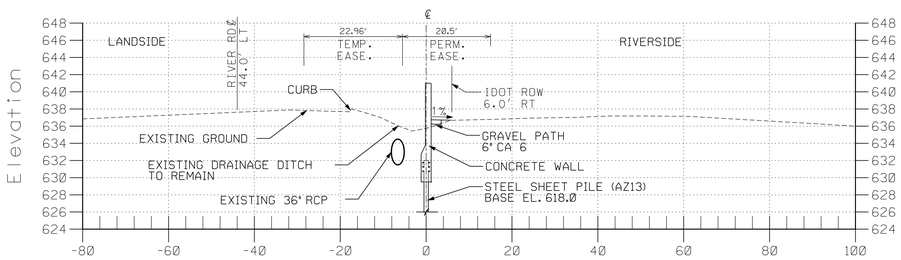

STA. 217+00

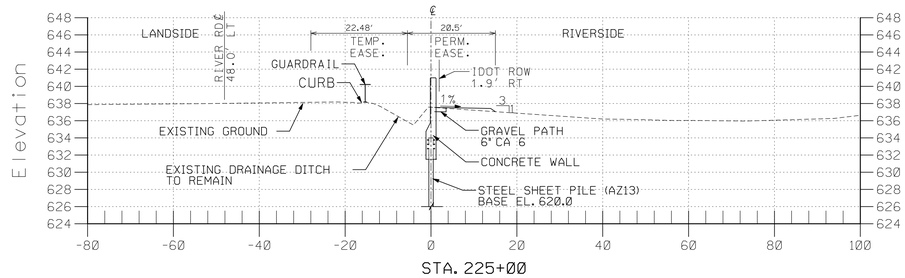

STA. 225+00

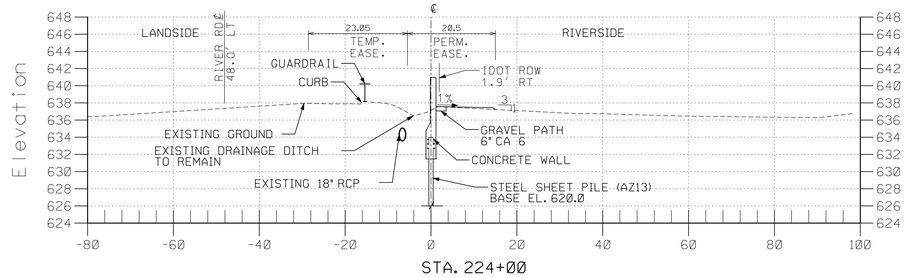

STA. 224+00

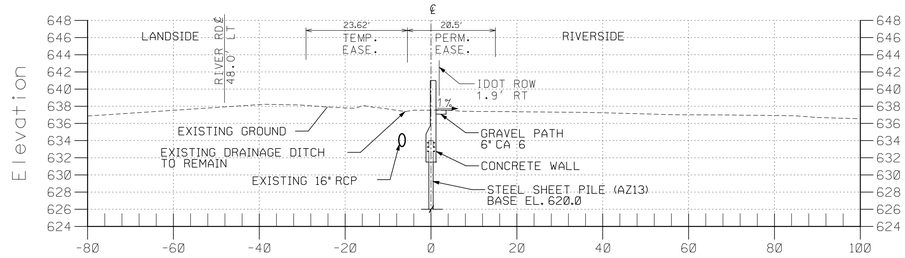

STA. 223+00

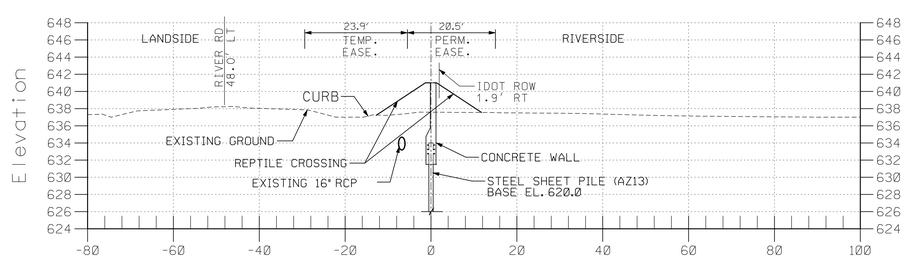

REPTILE CROSSING
STA. 222+50

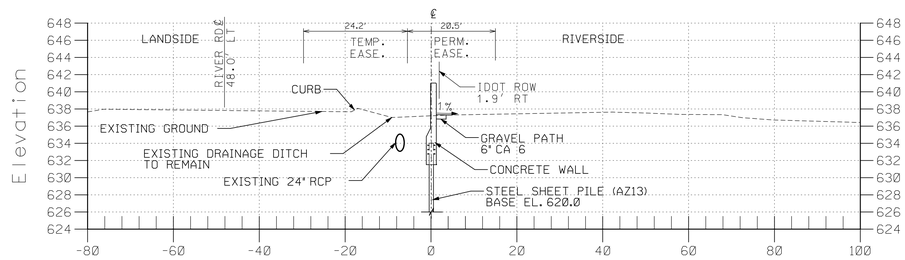

STA. 222+00

NOTES:

1. REFER TO C-42 FOR GRAVEL PATH DETAIL.
2. REFER TO STRUCTURAL SHEETS FOR STRUCTURES AND FLOODWALL DETAILS.
3. CONTRACTOR SHALL PLACE SATISFACTORY FILL AS NEED TO ACHIEVE PROPOSAL GRADE AS SHOWN ON CROSS-SECTION.

15 0 15 30
1 INCH = 15 FEET
HORIZONTAL SCALE

7.5 0 7.5 15
1 INCH = 7.5 FEET
VERTICAL SCALE

US Army Corps of Engineers
Chicago District

SYMBOL	AMENDMENT DESCRIPTION	DATE APPROVED	SYMBOL	DESCRIPTION	DATE APPROVED

DESIGNED BY: GA
DATE: 08-18-2008
DRAWN BY: GA
SCALE: AS SHOWN
CHECKED BY: JT
SOLICITATION NUMBER: W912P6-08-B-0003
SUBMITTED BY: JOHN GROBOSKI, P.E.
DATE: 08-18-08

U.S. ARMY ENGINEER DISTRICT
CORPS OF ENGINEERS
CHICAGO, ILLINOIS

DES PLAINES RIVER, ILLINOIS
LOCAL FLOOD PROTECTION
FLOODWALL 37
RIVER RD/MILWAUKEE AVE.
CROSS-SECTIONS
STA. 217+00 TO 225+00

SHEET REFERENCE NUMBER:
C-45
SHEET 57 OF 131

PLOT DATE: 8/18/2008
FILENAME: levee37-sht045.dgn

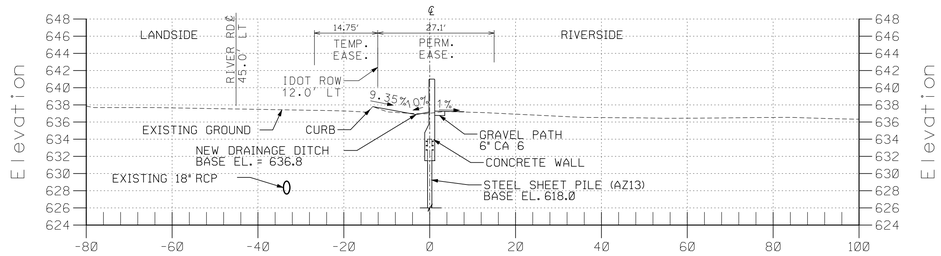

STA. 229+00

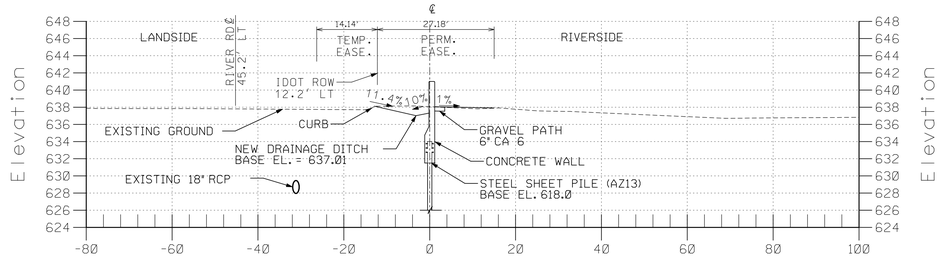

STA. 228+00

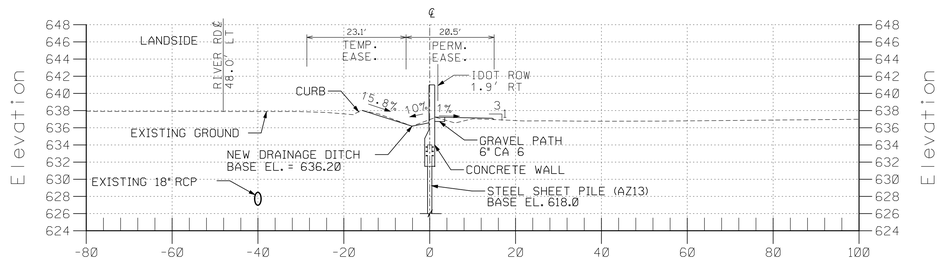

STA. 227+00

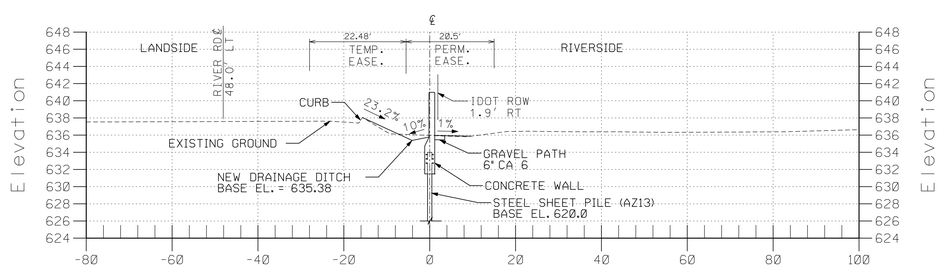

STA. 226+00

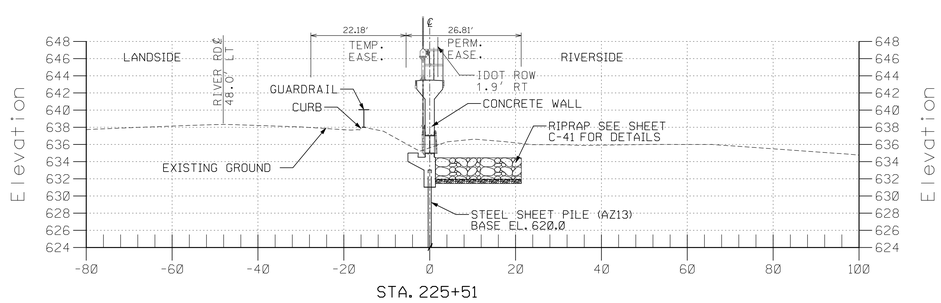

STA. 225+51

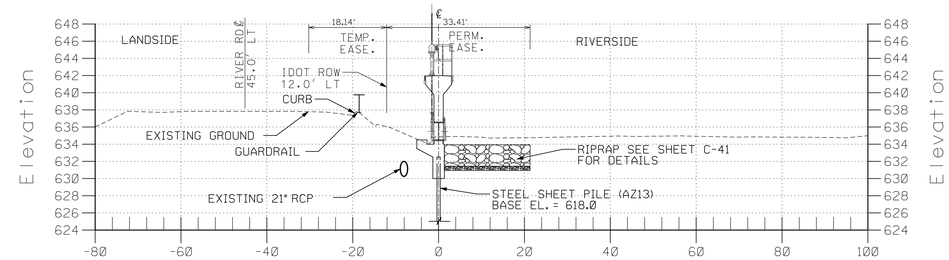

STA. 233+74

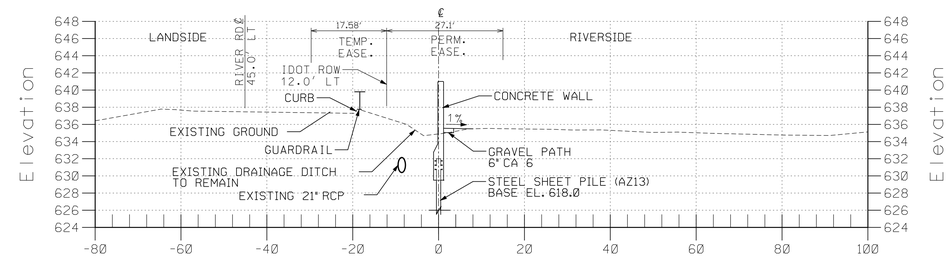

STA. 233+00

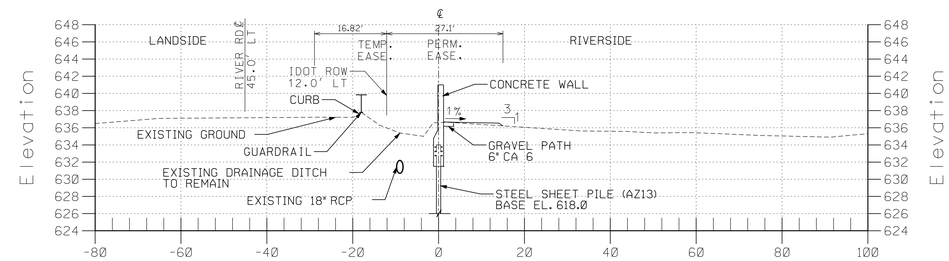

STA. 232+00

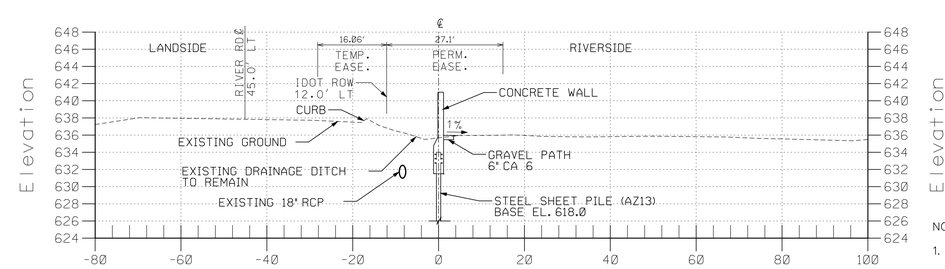

STA. 231+00

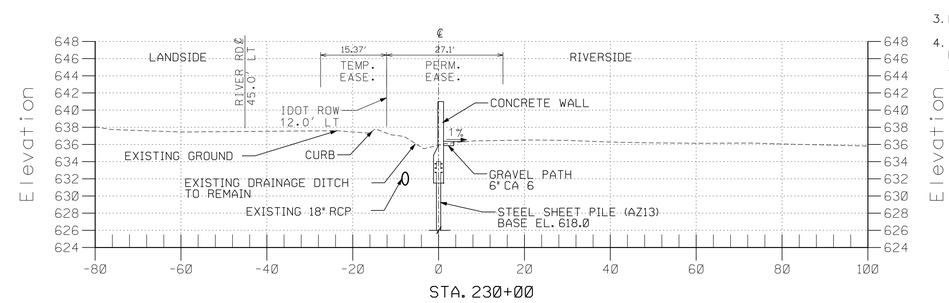

STA. 230+00

NOTES:

1. REFER TO C-42 FOR GRAVEL PATH DETAIL.
2. REFER TO STRUCTURAL SHEETS FOR STRUCTURES AND FLOODWALL DETAILS.
3. PLACE RIPRAP TO MEET EXISTING GROUND.
4. CONTRACTOR SHALL PLACE SATISFACTORY FILL AS NEED TO ACHIEVE PROPOSAL GRADE AS SHOWN ON CROSS-SECTION.

15 0 15 30
1 INCH = 15 FEET
HORIZONTAL SCALE

7.5 0 7.5 15
1 INCH = 7.5 FEET
VERTICAL SCALE

US Army Corps of Engineers
Chicago District

SYMBOL	AMENDMENT DESCRIPTION	DATE APPROVED	SYMBOL	DESCRIPTION	DATE APPROVED

DESIGNED BY: GA
DATE: 08-18-2008
DRAWN BY: GA
SCALE: AS SHOWN
CHECKED BY: JT
SOLICITATION NUMBER: W912P6-08-B-0003
SUBMITTED BY: JOHN GROBOSKI, P.E.
DATE: 08-18-08

U.S. ARMY ENGINEER DISTRICT
CORPS OF ENGINEERS
CHICAGO, ILLINOIS

DES PLAINES RIVER, ILLINOIS
LOCAL FLOOD PROTECTION
FLOODWALL 37
RIVER RD/MILWAUKEE AVE.
CROSS-SECTION
STA. 225+51 TO 233+74

SHEET REFERENCE NUMBER:
C-46
SHEET 58 OF 131

PLOT DATE: 8/18/2008
FILENAME: lrwa37-ant046.dgn

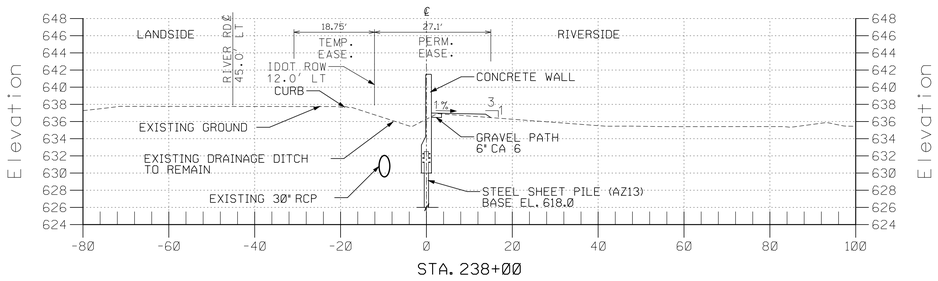

STA. 238+00

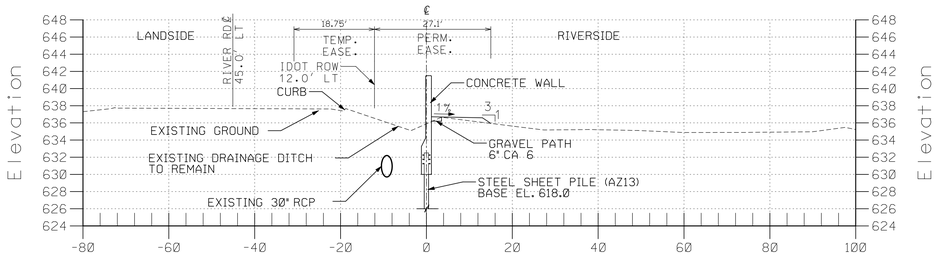

STA. 237+00

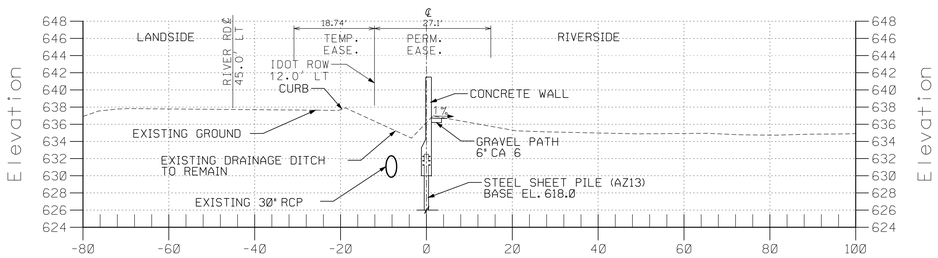

STA. 236+00

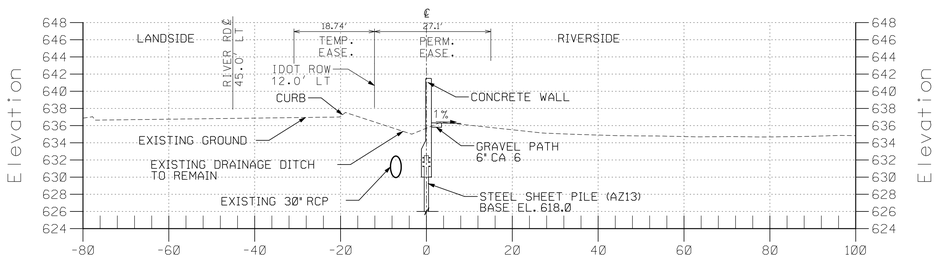

STA. 235+00

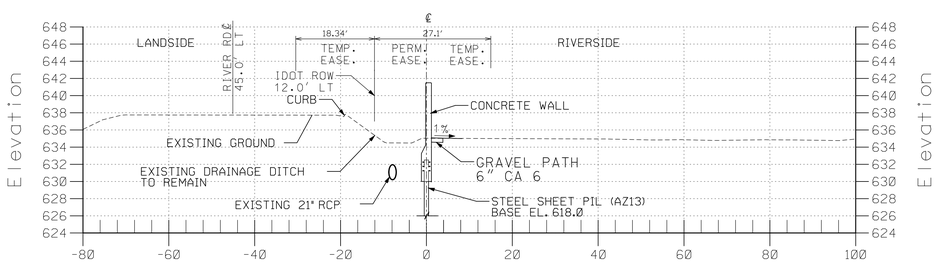

STA. 234+00

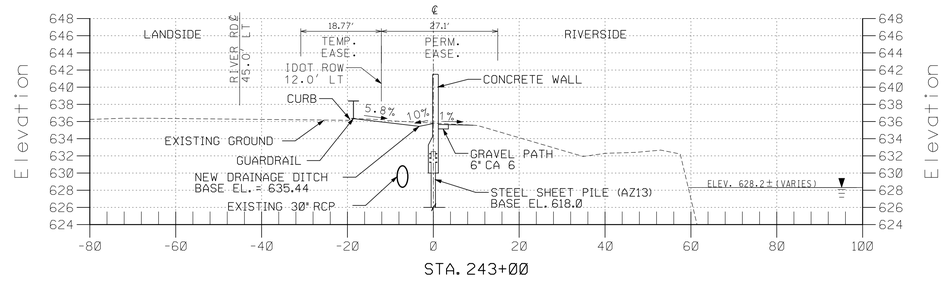

STA. 243+00

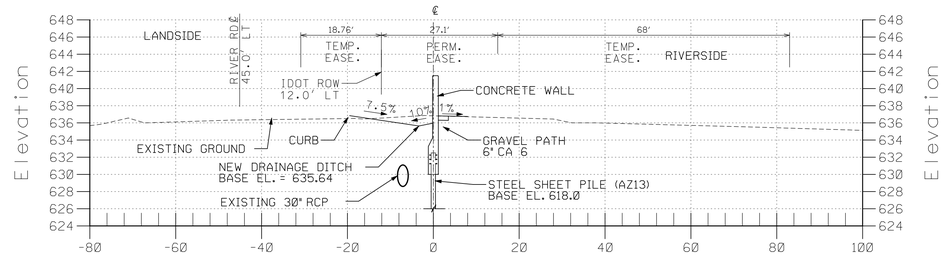

STA. 242+00

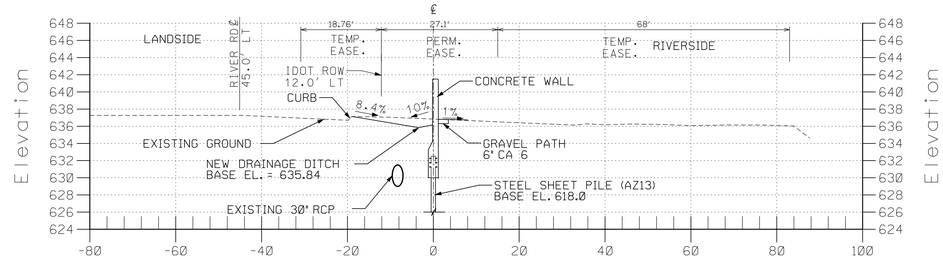

STA. 241+00

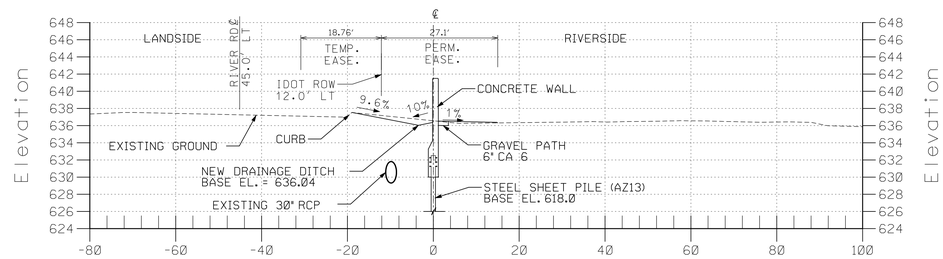

STA. 240+00

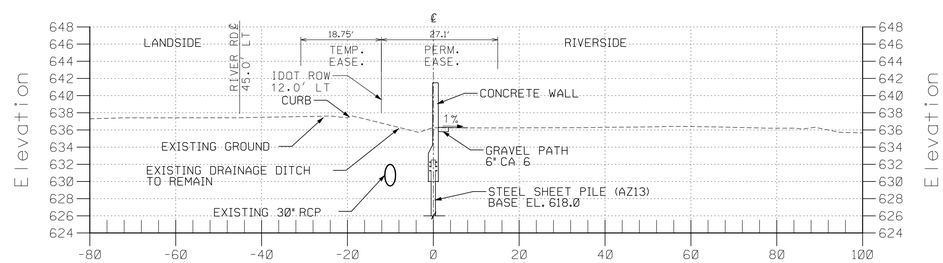

STA. 239+00

NOTES:

1. REFER TO C-42 FOR GRAVEL PATH DETAIL.
2. REFER TO STRUCTURAL SHEETS FOR STRUCTURES AND FLOODWALL DETAILS.
3. THE RIVER LEVEL, AS SHOWN, DEPICTS INFORMATION AT TIME OF SURVEY. REFER TO SECTION 0800B OF THE SPECIFICATION FOR AVERAGE FLOW STATISTICS FOR DESPLAINES RIVER.
4. CONTRACTOR SHALL PLACE SATISFACTORY FILL AS NEED TO ACHIEVE PROPOSAL GRADE AS SHOWN ON CROSS-SECTION.

15 0 15 30
1 INCH = 15 FEET
HORIZONTAL SCALE

7.5 0 7.5 15
1 INCH = 7.5 FEET
VERTICAL SCALE

US Army Corps of Engineers
Chicago District

SYMBOL	AMENDMENT DESCRIPTION	DATE APPROVED	SYMBOL	DESCRIPTION	DATE APPROVED

DESIGNED BY: GA	DATE: 08-18-2008
DRAWN BY: GA	SCALE: AS SHOWN
CHECKED BY: JT	SOLICITATION NUMBER: W912P6-08-B-0003
SUBMITTED BY: JOHN GROBOSKI, P.E.	DATE: 08-18-08

U.S.ARMY ENGINEER DISTRICT
CORPS OF ENGINEERS
CHICAGO, ILLINOIS

DES PLAINES RIVER, ILLINOIS
LOCAL FLOOD PROTECTION
FLOODWALL 37
RIVER RD/MILWAUKEE AVE.

CROSS-SECTION
STA. 234+00 TO 243+00

SHEET REFERENCE NUMBER:
C-47

SHEET 59 OF 131

PLOT DATE: 8/18/2008
FILENAME: levee37-sht047.dgn

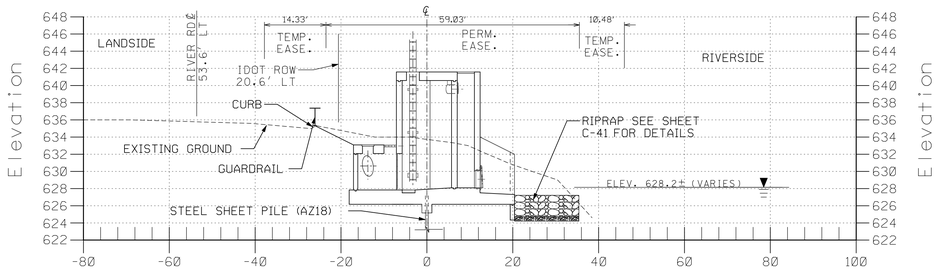

PUMP STATION #2
STA.245+96

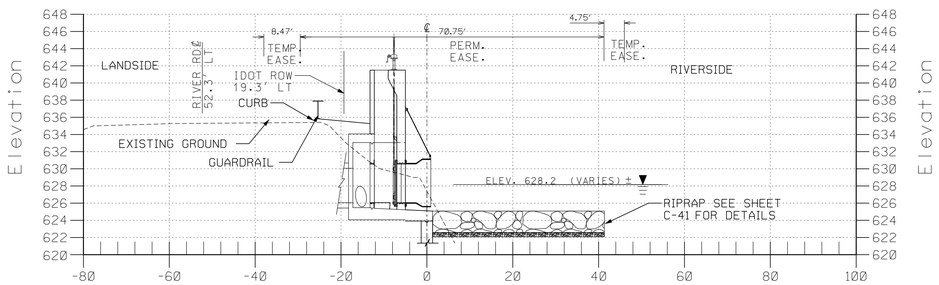

BACKFLOW STRUCTURE #1
STA.245+08

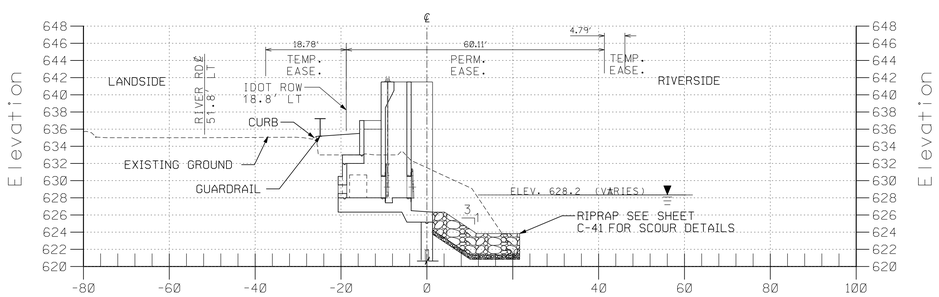

CLOSURE #5
STA.244+79

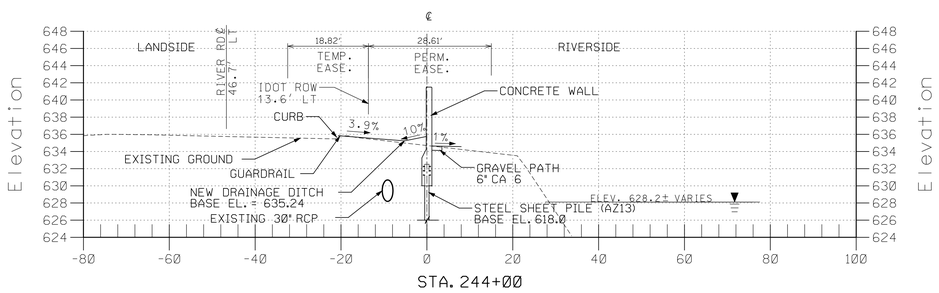

STA. 244+00

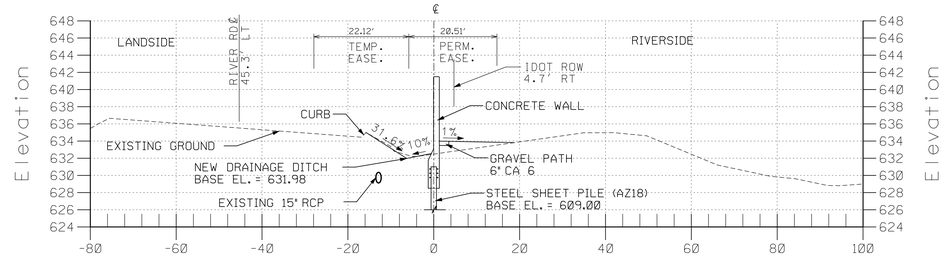

STA. 248+00

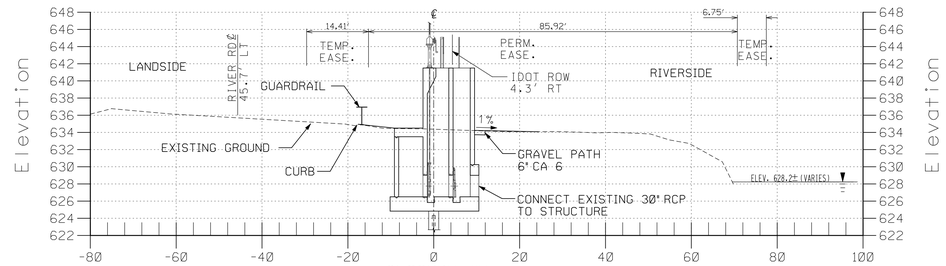

CLOSURE #7
STA.247+29

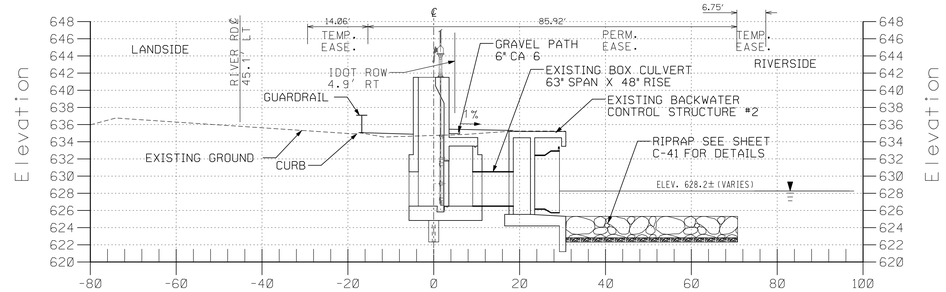

CLOSURE #6
STA.247+10

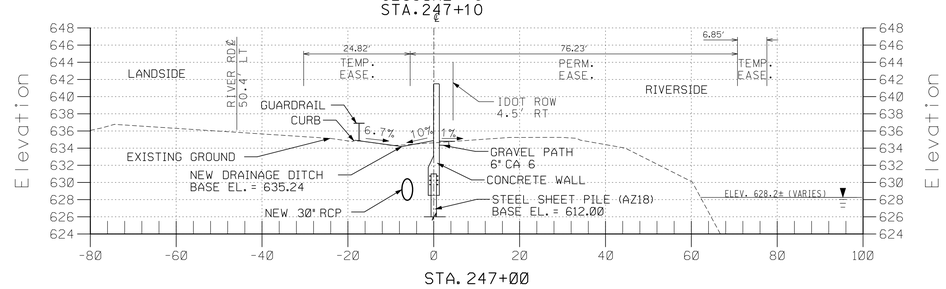

STA. 247+00

NOTES:

1. REFER TO C-42 FOR GRAVEL PATH DETAIL.
2. REFER TO STRUCTURAL SHEETS FOR STRUCTURES AND FLOODWALL DETAILS.
3. THE RIVER LEVEL, AS SHOWN, DEPICTS INFORMATION AT TIME OF SURVEY. REFER TO SECTION 0800B OF THE SPECIFICATION FOR AVERAGE FLOW STATISTICS FOR DESPLAINES RIVER.
4. CONTRACTOR SHALL PLACE SATISFACTORY FILL AS NEED TO ACHIEVE PROPOSAL GRADE AS SHOWN ON CROSS-SECTION.

15 0 15 30
1 INCH = 15 FEET
HORIZONTAL SCALE

7.5 0 7.5 15
1 INCH = 7.5 FEET
VERTICAL SCALE

US Army Corps of Engineers
Chicago District

SYMBOL	AMENDMENT DESCRIPTION	DATE APPROVED	SYMBOL	DESCRIPTION	DATE APPROVED

DESIGNED BY: GA
DATE: 08-18-2008
DRAWN BY: GA
SCALE: AS SHOWN
CHECKED BY: JT
SOLICITATION NUMBER: W912P6-08-B-0003
SUBMITTED BY: JOHN GROBOSKI, P.E.
DATE: 08-18-08

U.S. ARMY ENGINEER DISTRICT
CORPS OF ENGINEERS
CHICAGO, ILLINOIS

DES PLAINES RIVER, ILLINOIS
LOCAL FLOOD PROTECTION
FLOODWALL 37
RIVER RD/MILWAUKEE AVE.

CROSS- SECTION
STA. 244+00 TO 248+00

SHEET REFERENCE NUMBER:
C-48
SHEET 60 OF 131

PLOT DATE: 8/18/2008
FILENAME: levee37-sec48.dgn

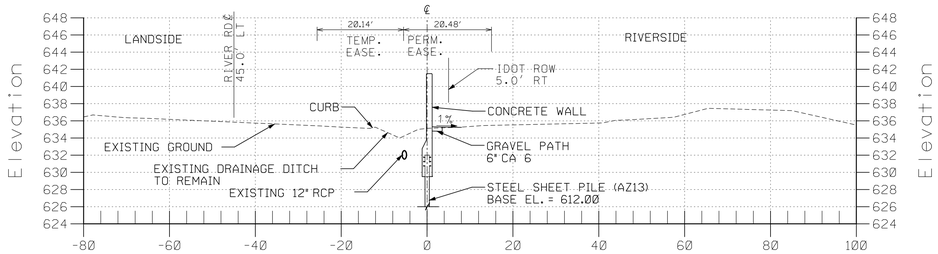

STA. 253+00

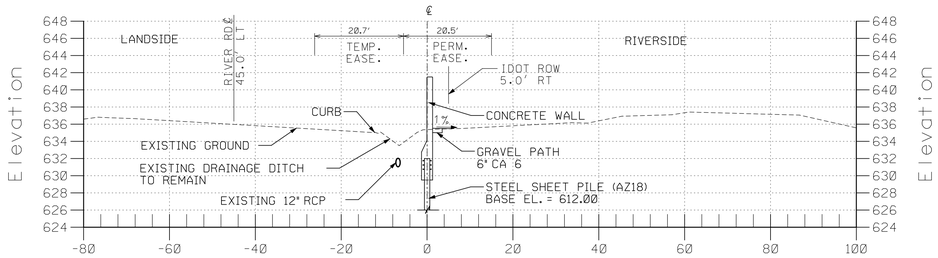

STA. 252+00

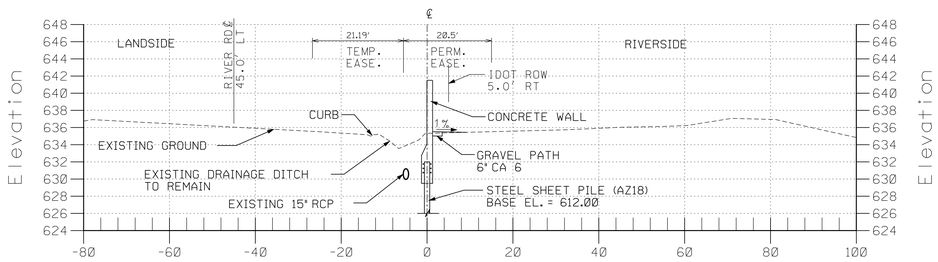

STA. 251+00

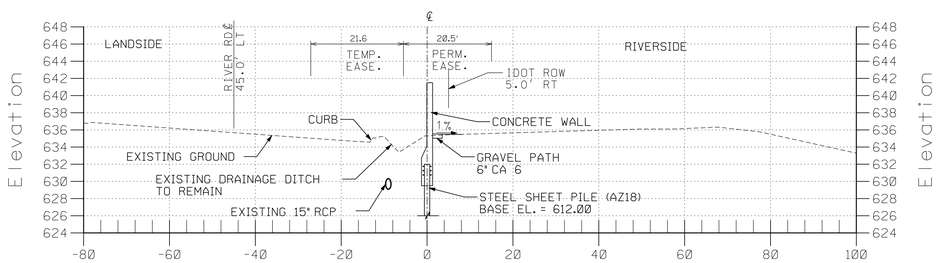

STA. 250+00

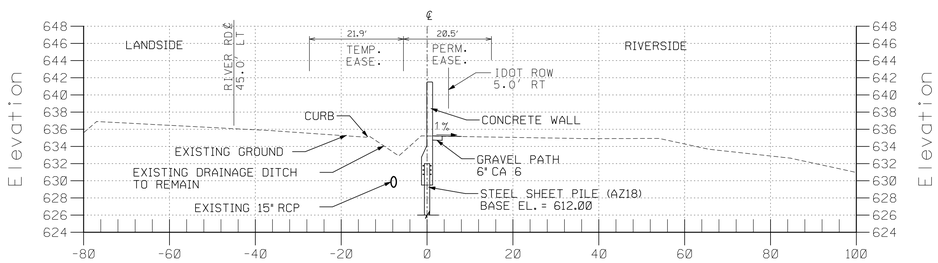

STA. 249+00

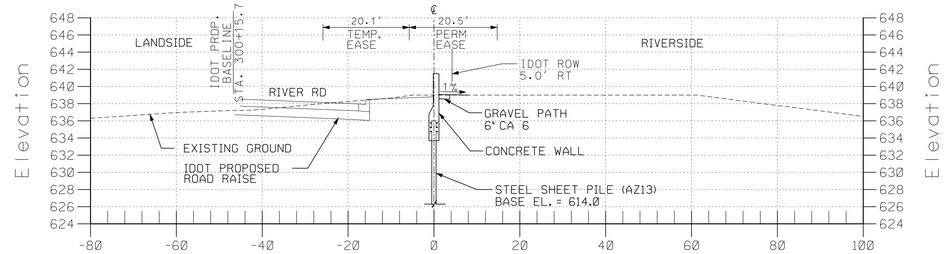

STA. 257+00

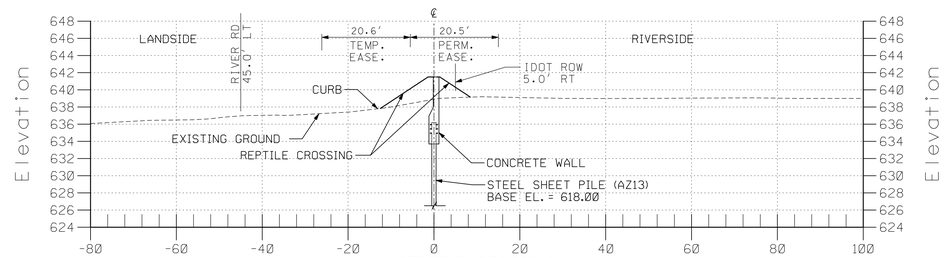

REPTILE CROSSING
STA. 256+20

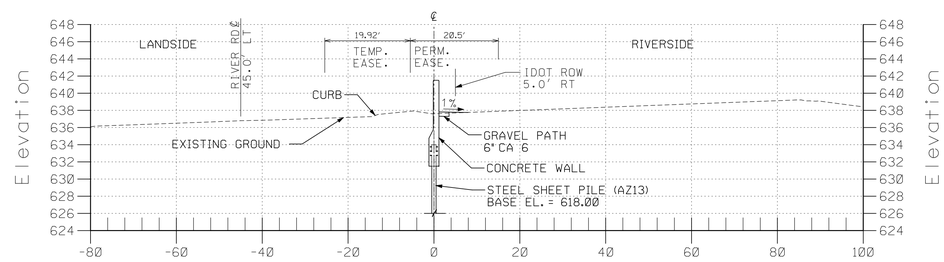

STA. 256+00

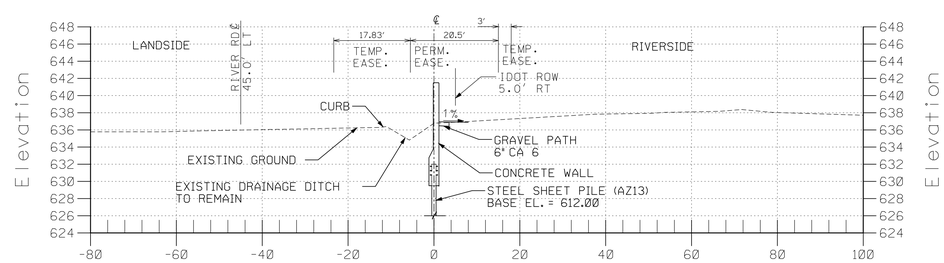

STA. 255+00

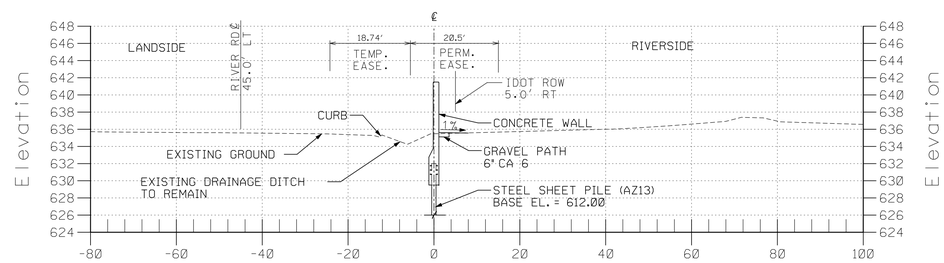

STA. 254+00

NOTES:

1. REFER TO C-42 FOR GRAVEL PATH DETAIL.
2. REFER TO STRUCTURAL SHEETS FOR STRUCTURES AND FLOODWALL DETAILS.
3. IDOT PROPOSED ROAD RAISE IS SHOWN FOR INFORMATION ONLY.
4. CONTRACTOR SHALL PLACE SATISFACTORY FILL AS NEED TO ACHIEVE PROPOSAL GRADE AS SHOWN ON CROSS-SECTION.

15 0 15 30
1 INCH = 15 FEET
HORIZONTAL SCALE

7.5 0 7.5 15
1 INCH = 7.5 FEET
VERTICAL SCALE

US Army Corps of Engineers
Chicago District

SYMBOL	AMENDMENT DESCRIPTION	DATE APPROVED	SYMBOL	DESCRIPTION	DATE APPROVED

DESIGNED BY: GA
DATE: 08-18-2008
DRAWN BY: GA
SCALE: AS SHOWN
CHECKED BY: JT
SOLICITATION NUMBER: W912P6-08-B-0003
SUBMITTED BY: JOHN GROBOSKI, P.E.
DATE: 08-18-08

U.S. ARMY ENGINEER DISTRICT
CORPS OF ENGINEERS
CHICAGO, ILLINOIS

DES PLAINES RIVER, ILLINOIS
LOCAL FLOOD PROTECTION
FLOODWALL 37
RIVER RD/MILWAUKEE AVE.

CROSS SECTION
STA. 249+00 TO 257+00

SHEET REFERENCE NUMBER:
C-49
SHEET 61 OF 131

PLOT DATE: 8/18/2008
FILENAME: lrwa37-sht49.dgn

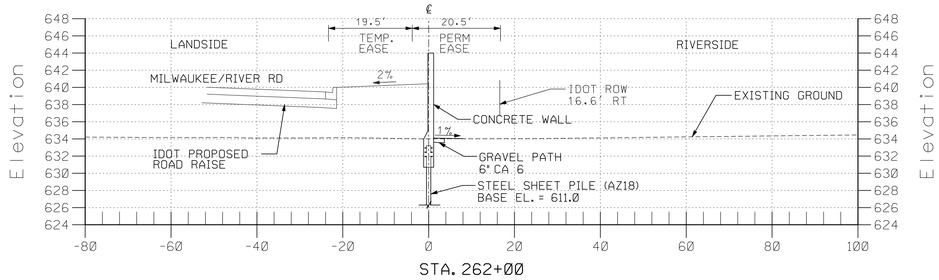

STA. 262+00

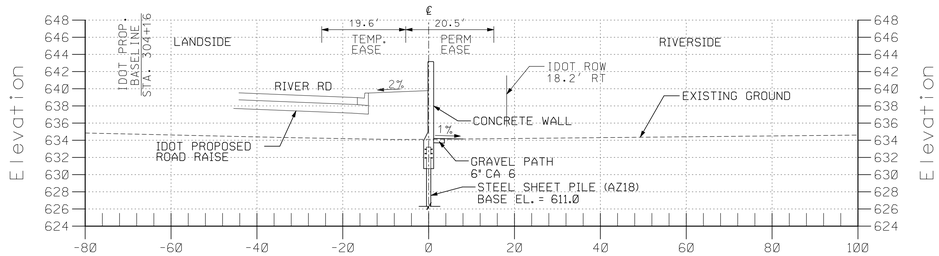

STA. 261+00

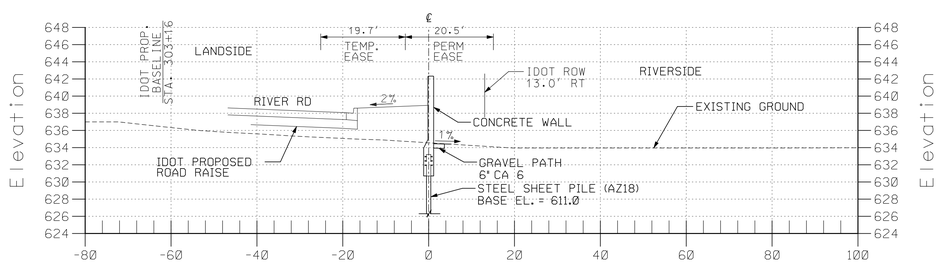

STA. 260+00

STA. 259+00

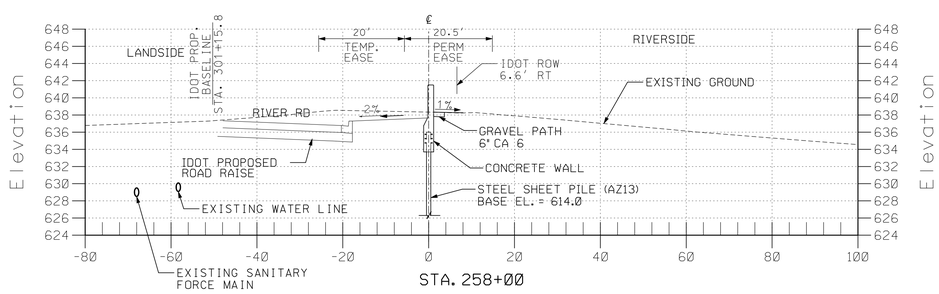

STA. 258+00

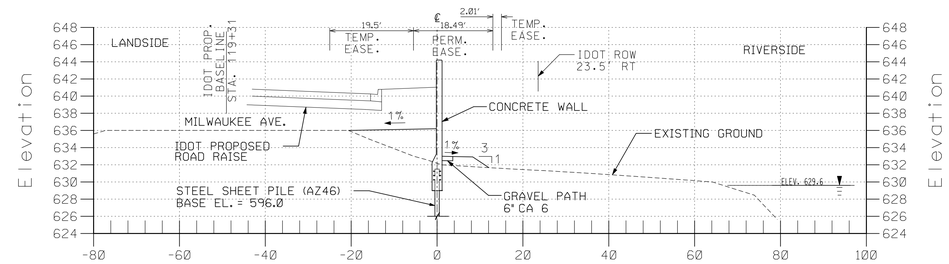

STA. 270+36

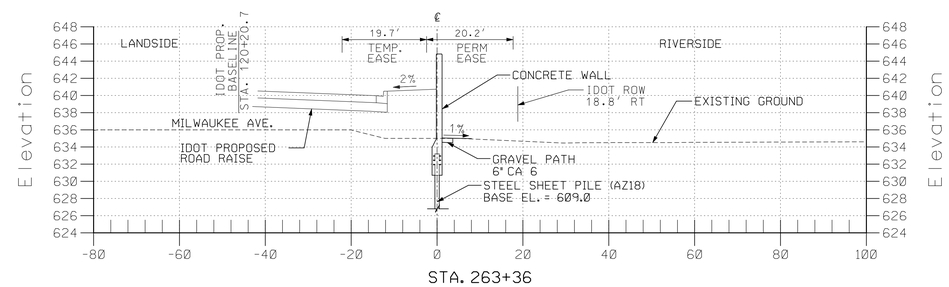

STA. 263+36

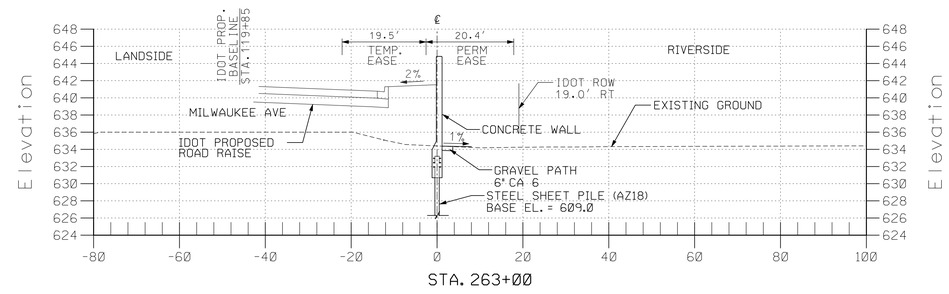

STA. 263+00

NOTES:

1. REFER TO C-42 FOR GRAVEL PATH DETAIL.
2. REFER TO STRUCTURAL SHEETS FOR STRUCTURES AND FLOODWALL DETAILS.
3. IDOT PROPOSED ROAD RAISE IS SHOWN FOR INFORMATION ONLY.
4. THE RIVER LEVEL, AS SHOWN, DEPICTS INFORMATION AT TIME OF SURVEY. REFER TO SECTION 0800B OF THE SPECIFICATION FOR AVERAGE FLOW STATISTICS FOR DESPLAINES RIVER.
5. CONTRACTOR SHALL PLACE SATISFACTORY FILL AS NEED TO ACHIEVE PROPOSAL GRADE AS SHOWN ON CROSS-SECTION.

15 0 15 30
1 INCH = 15 FEET
HORIZONTAL SCALE

7.5 0 7.5 15
1 INCH = 7.5 FEET
VERTICAL SCALE

US Army Corps of Engineers
Chicago District

SYMBOL	AMENDMENT DESCRIPTION	DATE APPROVED	SYMBOL	DESCRIPTION	DATE APPROVED

DESIGNED BY: GA	DATE: 08-18-2008
DRAWN BY: GA	SCALE: AS SHOWN
CHECKED BY: JT	SOLICITATION NUMBER: W912P6-08-B-0003
SUBMITTED BY: JOHN GROBOSKI, P.E.	DATE: 08-18-08

U.S.ARMY ENGINEER DISTRICT
CORPS OF ENGINEERS
CHICAGO, ILLINOIS

DES PLAINES RIVER, ILLINOIS
LOCAL FLOOD PROTECTION
FLOODWALL 37
RIVER RD/MILWAUKEE AVE.

CROSS-SECTION
STA. 258+00 TO 270+36

SHEET REFERENCE NUMBER:
C-50

PLOT DATE: 8/18/2008
FILENAME: levee37-sht050.dgn

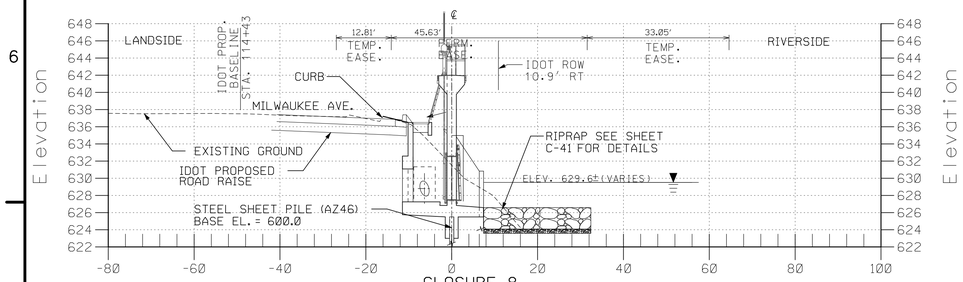

CLOSURE 8
STA. 275+08.04

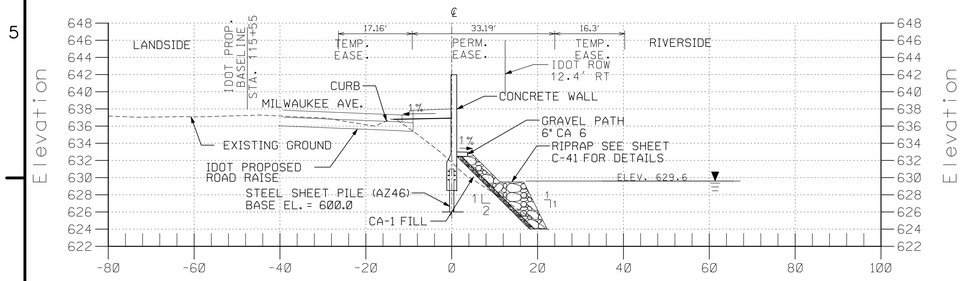

STA. 274+00

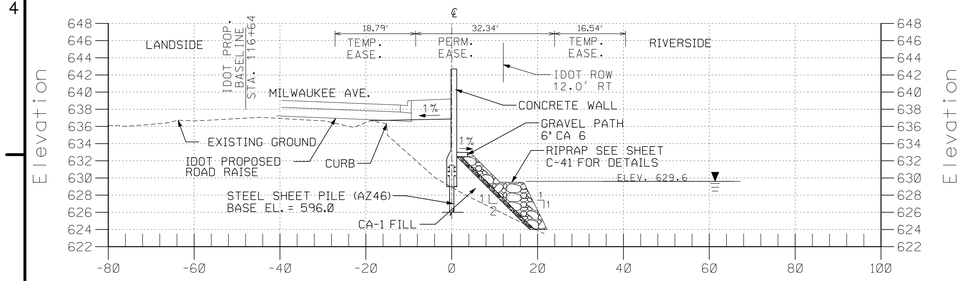

STA. 273+00

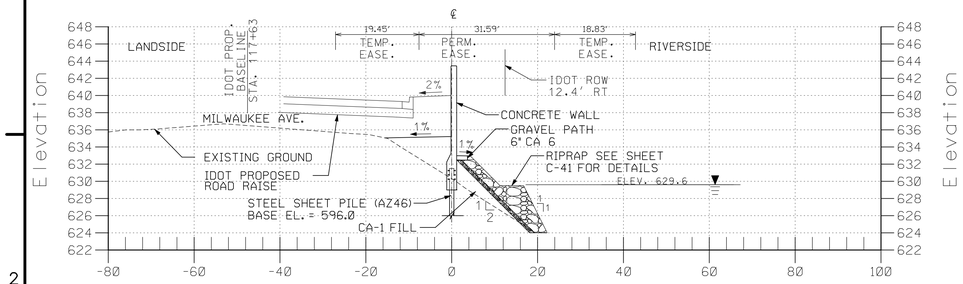

STA. 272+00

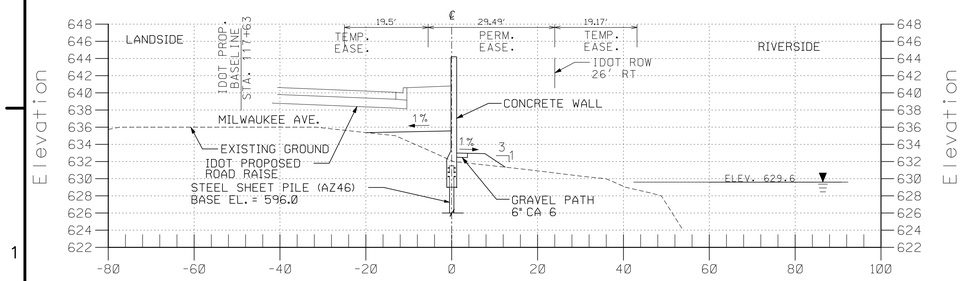

STA. 271+00

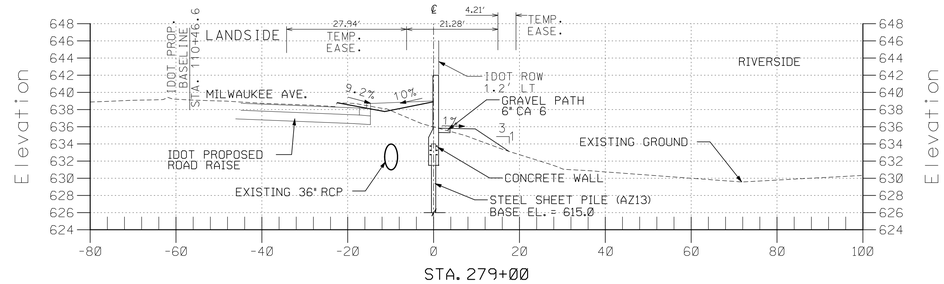

STA. 279+00

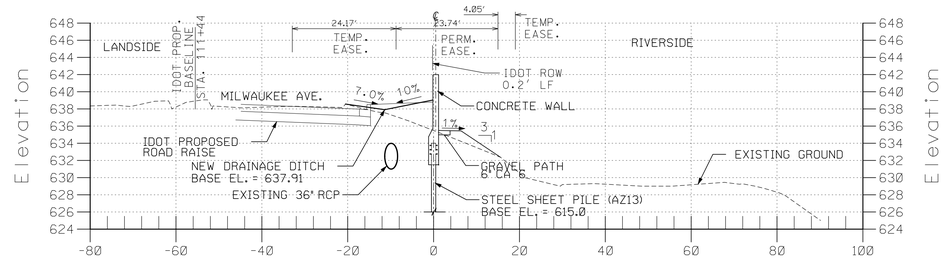

STA. 278+00

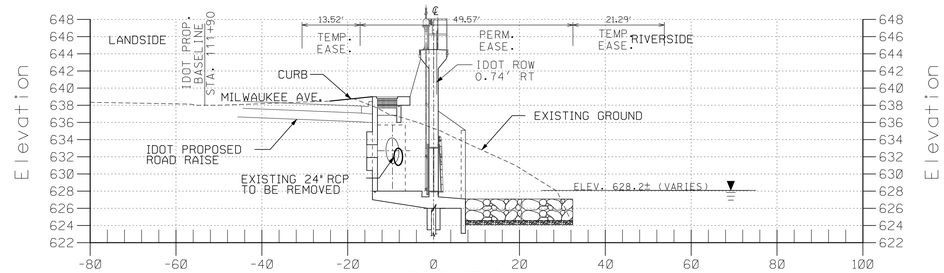

CLOSURE 9
STA. 277+52

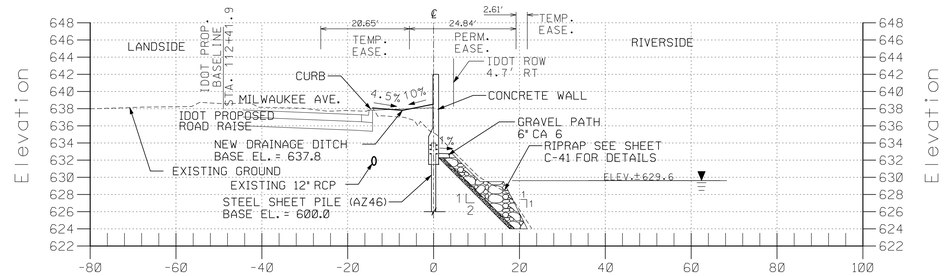

STA. 277+00

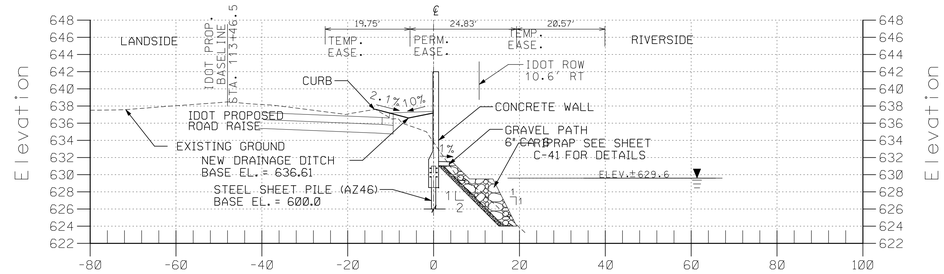

STA. 276+00

NOTES:

1. REFER TO C-42 FOR GRAVEL PATH DETAIL.
2. REFER TO STRUCTURAL SHEETS FOR STRUCTURES AND FLOODWALL DETAILS.
3. THE RIVER LEVEL, AS SHOWN, DEPICTS INFORMATION AT THE TIME OF SURVEY. REFER TO SECTION 0800B OF THE SPECIFICATION FOR AVERAGE FLOW STATISTICS FOR DESPLAINES RIVER.
4. IDOT PROPOSED ROAD RAISE IS SHOWN FOR INFORMATION ONLY.
5. CONTRACTOR SHALL PLACE SATISFACTORY FILL AS NEED TO ACHIEVE PROPOSAL GRADE AS SHOWN ON CROSS-SECTION.

15 0 15 30
1 INCH = 15 FEET
HORIZONTAL SCALE

7.5 0 7.5 15
1 INCH = 7.5 FEET
VERTICAL SCALE

US Army Corps of Engineers
Chicago District

SYMBOL	AMENDMENT DESCRIPTION	DATE APPROVED	SYMBOL	DESCRIPTION	DATE APPROVED

DESIGNED BY: GA
DATE: 08-18-2008
DRAWN BY: GA
SCALE: AS SHOWN
CHECKED BY: JT
SOLICITATION NUMBER: W912P6-08-B-0003
SUBMITTED BY: JOHN GROBOSKI, P.E. 08-18-08
DATE:

U.S.ARMY ENGINEER DISTRICT
CORPS OF ENGINEERS
CHICAGO, ILLINOIS

DES PLAINES RIVER, ILLINOIS
LOCAL FLOOD PROTECTION
FLOODWALL 37
RIVER RD/MILWAUKEE AVE.

CROSS-SECTION
STA. 271+00 TO 279+00

SHEET REFERENCE NUMBER:
C-50A
SHEET 63 OF 131

PLOT DATE: 8/18/2008
FILENAME: levee37-sht250A.dgn

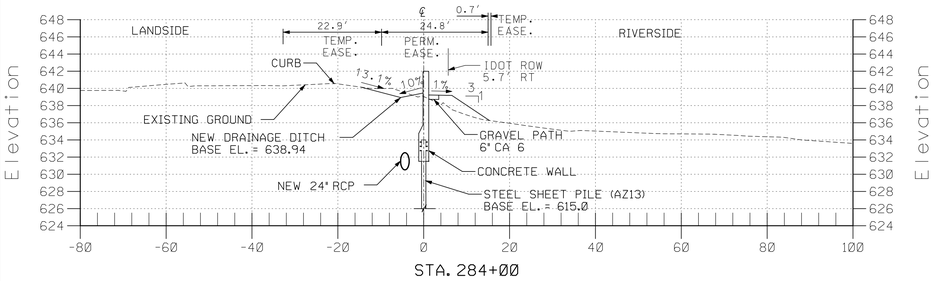

STA. 284+00

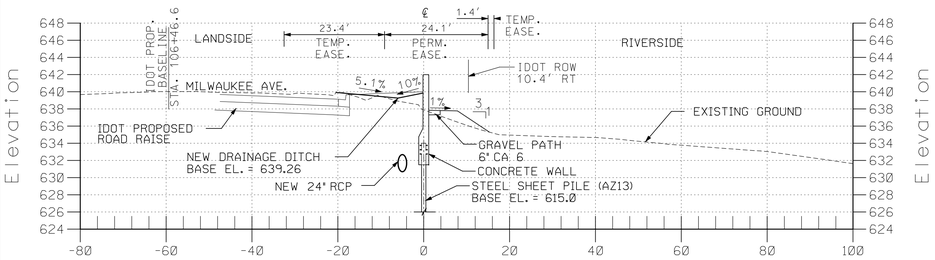

STA. 283+00

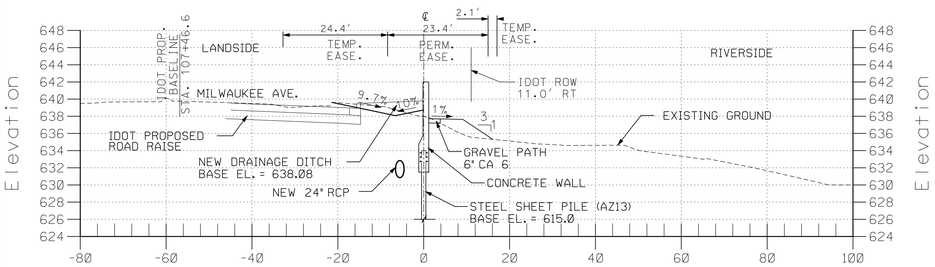

STA. 282+00

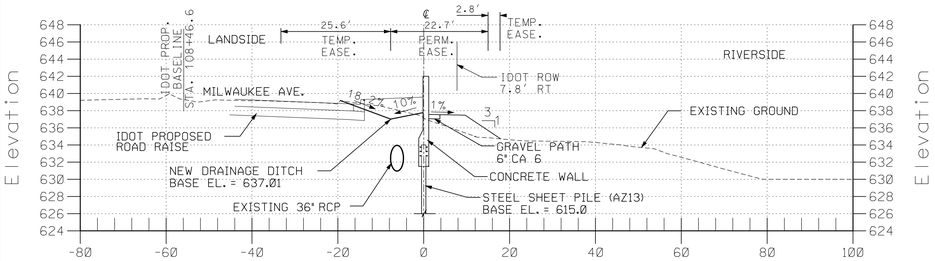

STA. 281+00

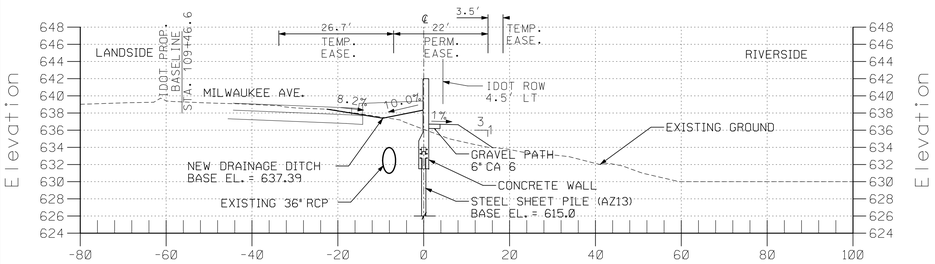

STA. 280+00

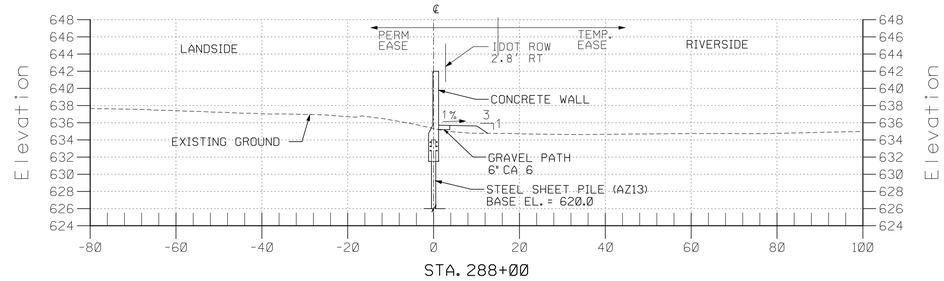

STA. 288+00

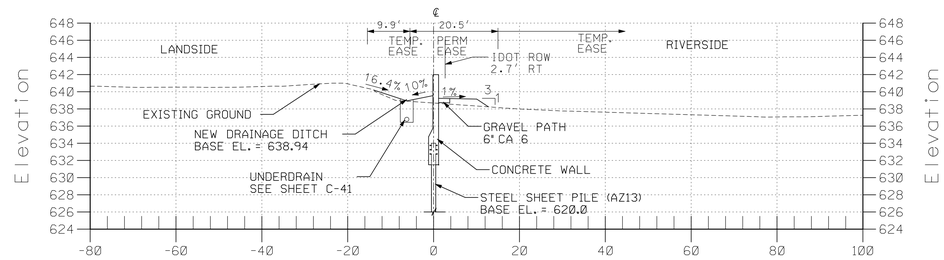

STA. 287+00

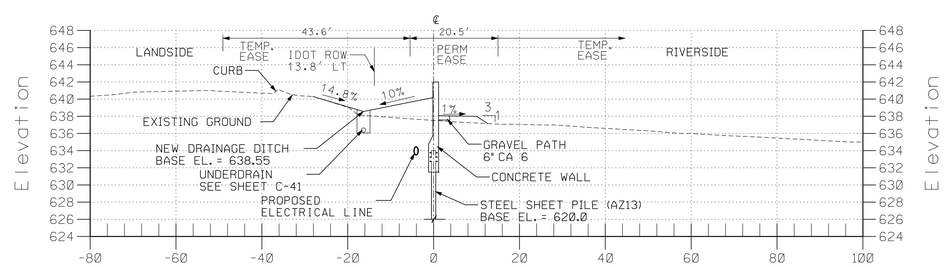

STA. 286+00

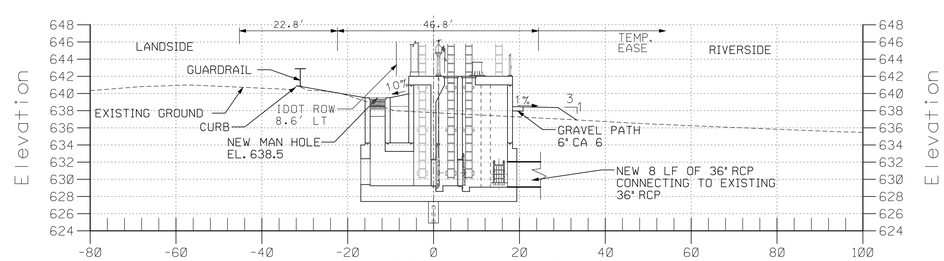

CLOSURE 10 & PUMPSTATION 3
STA. 285+76

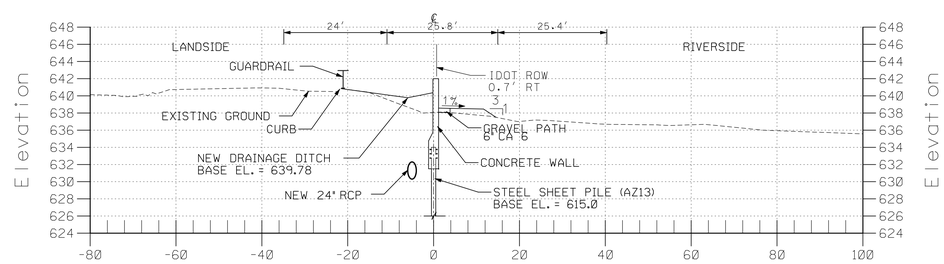

STA. 285+00

NOTES:

1. REFER TO C-42 FOR GRAVEL PATH DETAIL.
2. REFER TO STRUCTURAL SHEETS FOR STRUCTURES AND FLOODWALL DETAILS.
3. IDOT PROPOSED ROAD RAISE IS SHOWN FOR INFORMATION ONLY.
4. CONTRACTOR SHALL PLACE SATISFACTORY FILL AS NEED TO ACHIEVE PROPOSAL GRADE AS SHOWN ON CROSS-SECTION.

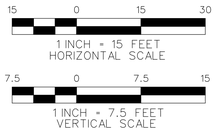

US Army Corps of Engineers
Chicago District

SYMBOL	AMENDMENT DESCRIPTION	DATE APPROVED	SYMBOL	DESCRIPTION	DATE APPROVED

DESIGNED BY: GA
DATE: 08-18-2008
DRAWN BY: GA
SCALE: AS SHOWN
CHECKED BY: JT
SOLICITATION NUMBER: W912P6-08-B-0003
SUBMITTED BY: JOHN GROBOSKI, P.E. 08-18-08
DATE:

U.S. ARMY ENGINEER DISTRICT
CORPS OF ENGINEERS
CHICAGO, ILLINOIS

DES PLAINES RIVER, ILLINOIS
LOCAL FLOOD PROTECTION
FLOODWALL 37
RIVER RD/MILWAUKEE AVE.

CROSS-SECTION
STA. 280+00 TO 288+00

SHEET REFERENCE NUMBER:
C-50B
SHEET 64 OF 131

PLOT DATE: 8/18/2008
FILENAME: levee37-sht25GB.dgn

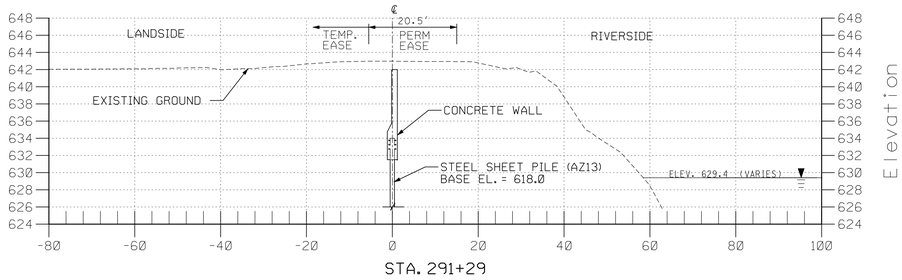

STA. 291+29

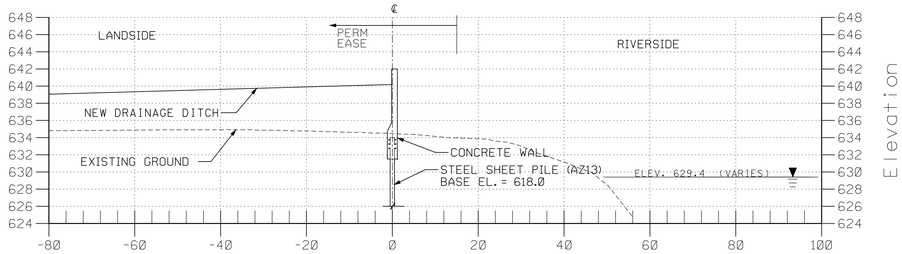

STA. 291+00

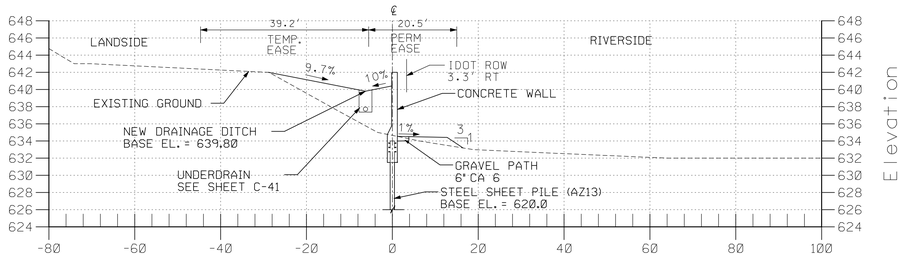

STA. 290+00

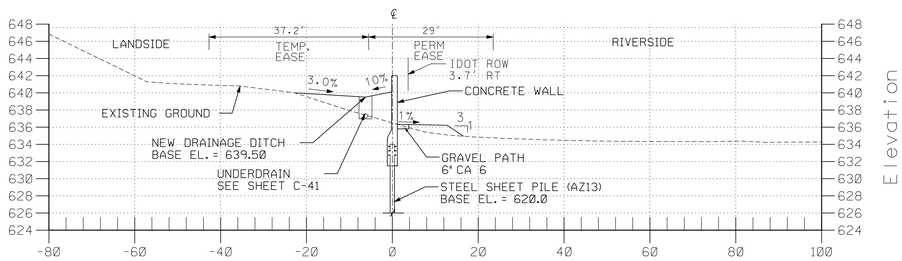

STA. 289+00

NOTES:

1. REFER TO C-42 FOR GRAVEL PATH DETAIL.
2. REFER TO STRUCTURAL SHEETS FOR STRUCTURES AND FLOODWALL DETAILS.
3. THE RIVER LEVEL, AS SHOWN, DEPICTS INFORMATION AT THE TIME OF SURVEY. REFER TO SECTION 0800B OF THE SPECIFICATION FOR AVERAGE FLOW STATISTICS FOR DESPLAINES RIVER.
4. CONTRACTOR SHALL PLACE SATISFACTORY FILL AS NEED TO ACHIEVE PROPOSAL GRADE AS SHOWN ON CROSS-SECTION.

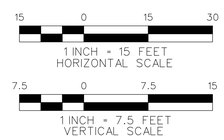

US Army Corps of Engineers
Chicago District

SYMBOL	AMENDMENT DESCRIPTION	DATE APPROVED	SYMBOL	DESCRIPTION	DATE APPROVED

DESIGNED BY: GA
DRAWN BY: GA
CHECKED BY: JT
SUBMITTED BY: JOHN GROBOSKI, P.E.
DATE: 08-18-2008
SCALE: AS SHOWN
SOLICITATION NUMBER: W912P6-08-B-0003
DATE: 08-18-08

U.S.ARMY ENGINEER DISTRICT
CORPS OF ENGINEERS
CHICAGO, ILLINOIS

DES PLAINES RIVER, ILLINOIS
LOCAL FLOOD PROTECTION
FLOODWALL 37
RIVER RD/MILWAUKEE AVE.

CROSS-SECTION
STA. 289+00 TO 291+29

SHEET REFERENCE NUMBER:
C-50C
SHEET 65 OF 131

PLOT DATE: 8/18/2009
FILENAME: levee37-sht0250c.dgn

MANHOLE TYPE A
1800 mm (72 in.) DIAMETER
(IDOT STANDARD 602406)

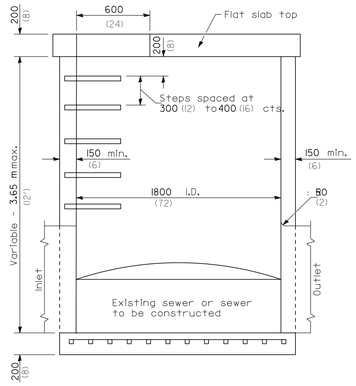

ELEVATION

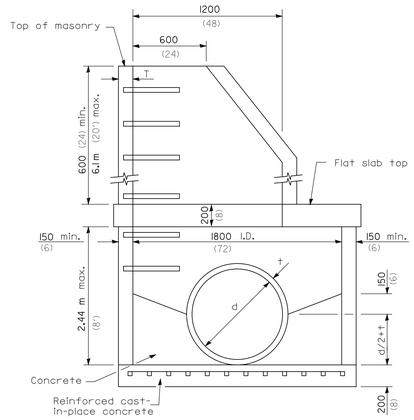

ELEVATION

GENERAL NOTES

1. Joint configuration and dimensions of flat slab top shall match and fit the riser joint detail.
2. Lifting devices shall be approved by the Engineer.
3. See IDOT Standard 602701 for details of cast iron steps.
4. All dimensions are in millimeters (inches) unless otherwise shown.

ALTERNATE MATERIALS FOR WALLS	T (min)
Concrete Masonry Units	125 (5)
Precast Reinforced Concrete Sections	100 (4)
Cast-in-Place Concrete	150 (6)

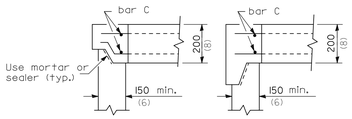

ALTERNATE JOINT CONFIGURATIONS

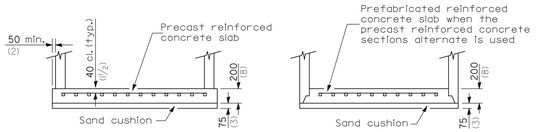

ALTERNATE BOTTOM SLAB

CATCH BASIN TYPE A
(IDOT STANDARD 602001)

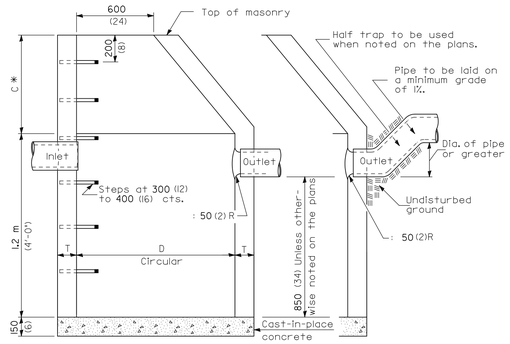

ELEVATION
(Standard Outlet)

ELEVATION
(Half Trap)

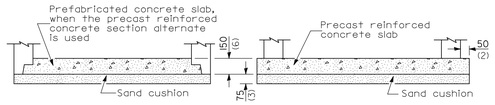

ALTERNATE BOTTOM SLAB

ALTERNATE MATERIALS FOR WALLS	D	C	T (min.)
Concrete Masonry Unit	1.2 m (4'-0") 1.5 m (5'-0")	750 (30) 1.15 m (3'-9")	125 (5) 125 (5)
Brick Masonry	1.2 m (4'-0") 1.5 m (5'-0")	750 (30) 1.15 m (3'-9")	200 (8) 200 (8)
Precast Reinforced Concrete Section	1.2 m (4'-0") 1.5 m (5'-0")	750 (30) 1.15 m (3'-9")	100 (4) 125 (5)
Cast-in-place Concrete	1.2 m (4'-0") 1.5 m (5'-0")	750 (30) 1.15 m (3'-9")	150 (6) 150 (6)

GENERAL NOTES

All catch basins shall be 1.2 m (4'-0") in diameter unless otherwise noted on the plans.

* Dimension C for precast reinforced concrete section may vary from the dimension given to plus 150 mm (6").

See Standard 602601 for optional precast reinforced concrete flat slab top.

See Standard 602701 for details of steps.

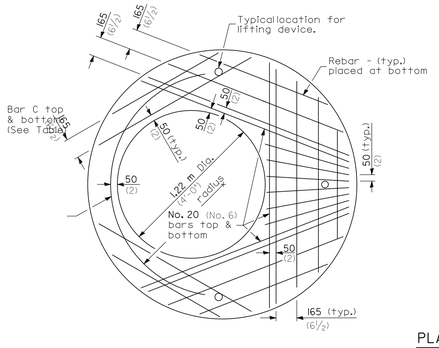

PLAN
Showing Rebar Reinforcement

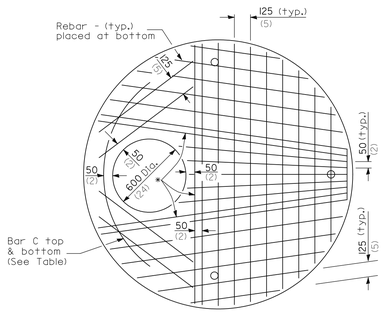

* No. 20 (No. 6) bars top & bottom

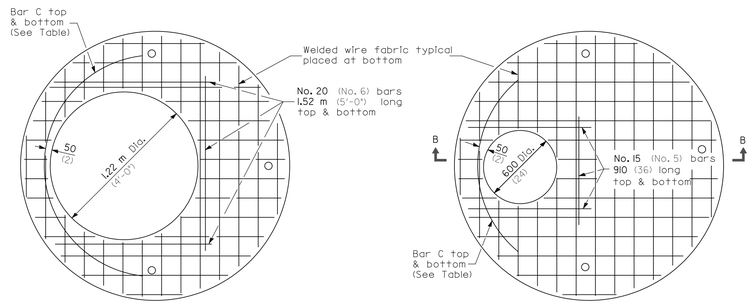

PLAN
Showing Welded Wire Fabric Reinforcement

Diameter of opening	Thickness	Reinforcement "As" WWF Each direction	Bar Size	No. 15 (No. 4) Bar C	
				Length	Radius
600 (24)	200 (8)	2244 mm²/m (1.06) sq. in./ft.	No. 20 (No. 6)	1.83 m (6'-0")	965 (38)
1.2 m (4'-0")	200 (8)	1736 mm²/m (0.82) sq. in./ft.	No. 20 (No. 6)	2.74 m (9'-0")	965 (38)

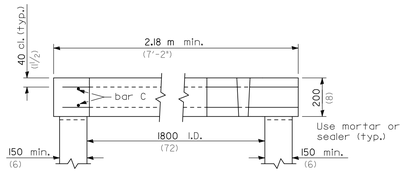

SECTION B-B

All dimensions are in millimeters (inches) unless otherwise shown.

US Army Corps of Engineers
Chicago District

SYMBOL	AMENDMENT DESCRIPTION	DATE APPROVED	SYMBOL	DESCRIPTION	DATE APPROVED

DESIGNED BY: GA | DATE: 08-18-2008
DRAWN BY: GA | SCALE: AS SHOWN
CHECKED BY: JT | SOLICITATION NUMBER: W912P6-08-B-0003
SUBMITTED BY: JOHN GROBOSKI, P.E. | DATE: 08-18-08

U.S. ARMY ENGINEER DISTRICT
CORPS OF ENGINEERS
CHICAGO, ILLINOIS

DES PLAINES RIVER, ILLINOIS
LOCAL FLOOD PROTECTION
FLOODWALL 37
RIVER RD/MILWAUKEE AVE.
STANDARD DETAIL OF
72" DIA. MANHOLE
& CATCH BASIN

SHEET REFERENCE NUMBER:
C-51
SHEET 66 OF 131

PLOT DATE: 8/18/2008
FILENAME: lrwa37-sht051.dgn

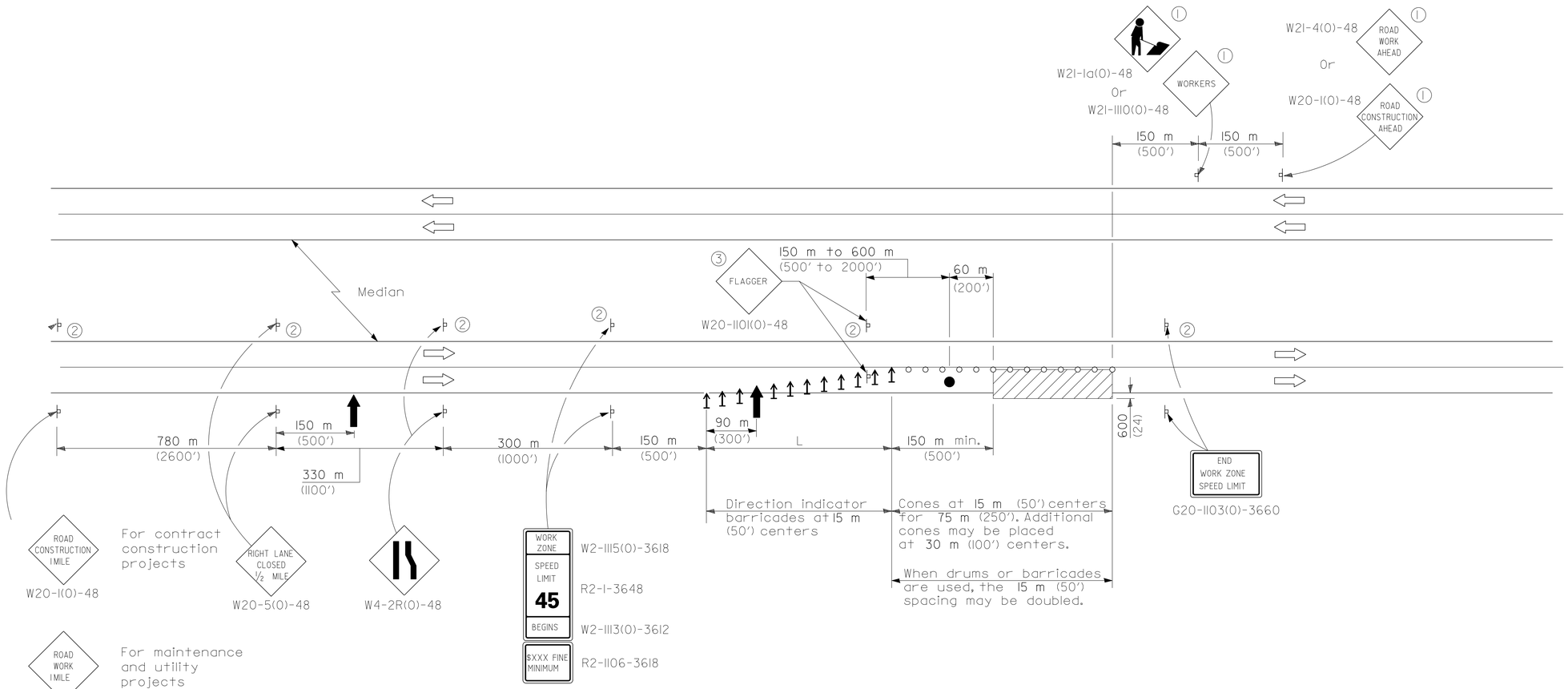

L = lane width X taper ratio		
Normal Posted Speed		Taper Ratio
km/h	mph	
90	55	55/1
80	45	45/1

TYPICAL APPLICATIONS

Pavement patch

Utility operations

Bituminous resurfacing

SYMBOLS

- Arrow board
- Work area
- Sign
- Direction indicator barricade
- Cone, drum or barricade
- Flagger with traffic control sign

1. Undivided roadway only with left lane closure in opposite direction.
2. Omitted when median is less 3 m (10').
3. FLAGGER signs shall be moved as necessary to maintain the required spacing between the sign and each separate work activity.

GENERAL NOTES

This Standard is used where at any time, any vehicle, equipment, workers or their activities will encroach on the lane adjacent to the shoulder, or on the shoulder within 600 mm (24") of the edge of pavement.

This Standard also applies when work is being performed in the left lane. Under these conditions, LEFT LANE CLOSED signs shall be substituted for RIGHT LANE CLOSED signs. On undivided highways, signs shall be added in the opposite direction as shown.

All dimensions are in millimeters (inches) unless otherwise shown.

LANE CLOSURE, MULTILANE, DAY OPERATIONS ONLY, FOR SPEEDS ≥ 45 MPH TO 55 MPH

STANDARD 701421-01

US Army Corps of Engineers Chicago District

SYMBOL	AMENDMENT DESCRIPTION	DATE APPROVED	SYMBOL	DESCRIPTION	DATE APPROVED

DESIGNED BY: GA | DATE: 08-18-2008
DRAWN BY: GA | SCALE: AS SHOWN
CHECKED BY: JT | SOLICITATION NUMBER: W912P6-08-B-0003
JOHN GROBOSKI, P.E. | DATE:
SUBMITTED BY:

U.S. ARMY ENGINEER DISTRICT
CORPS OF ENGINEERS
CHICAGO, ILLINOIS

DES PLAINES RIVER, ILLINOIS
LOCAL FLOOD PROTECTION
FLOODWALL 37
RIVER RD/MILWAUKEE AVE.
MAINTENANCE OF TRAFFIC

SHEET REFERENCE NUMBER:
C-52
SHEET 67 OF 131

PLOT DATE: 8/18/2008
FILENAME: lrwa37-sht052.dgn

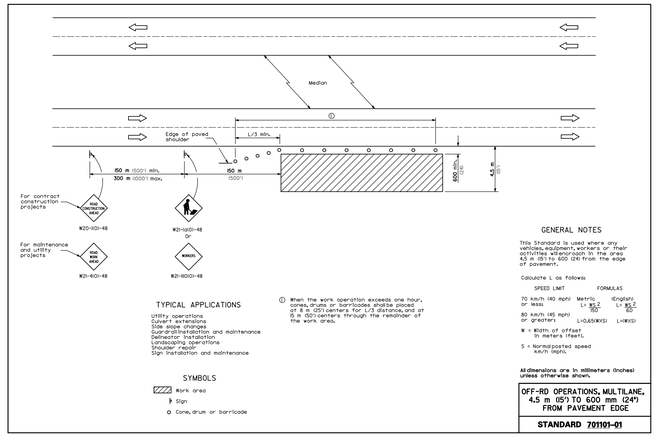

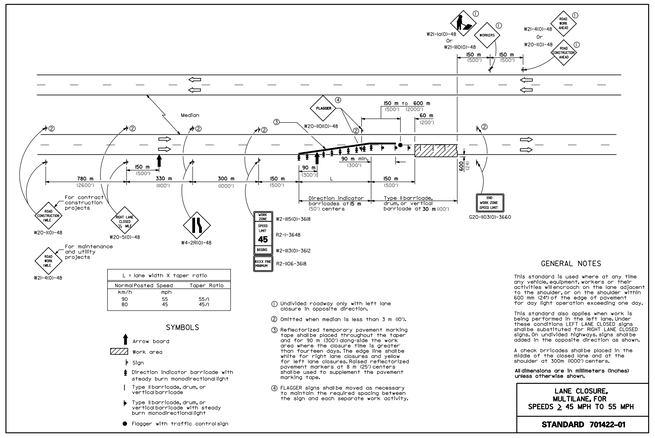

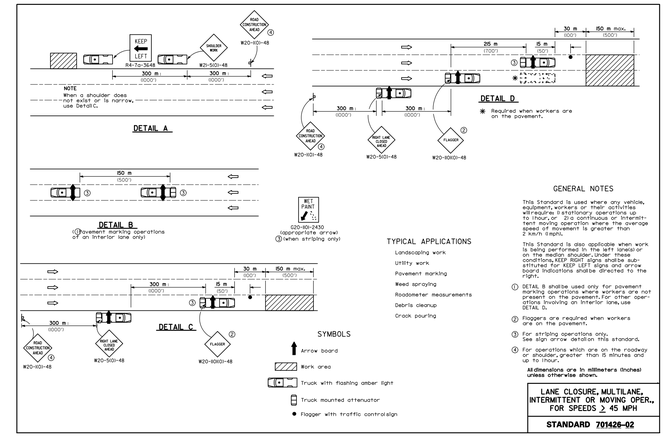

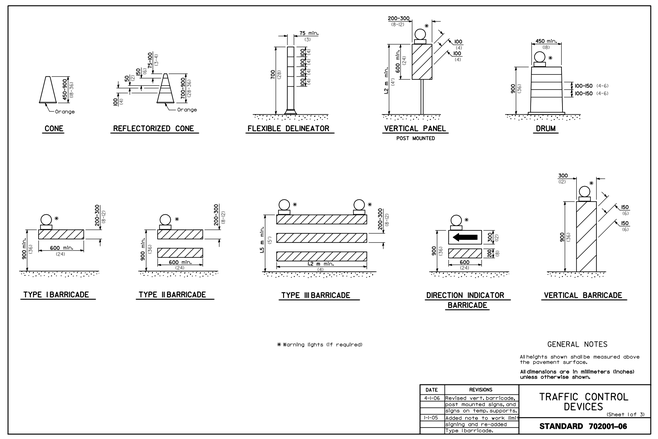

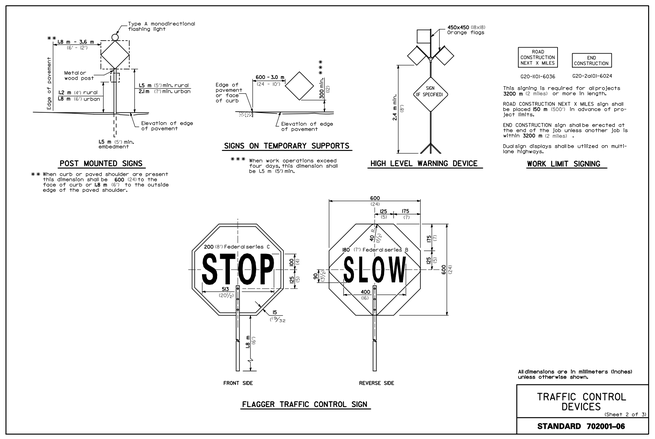

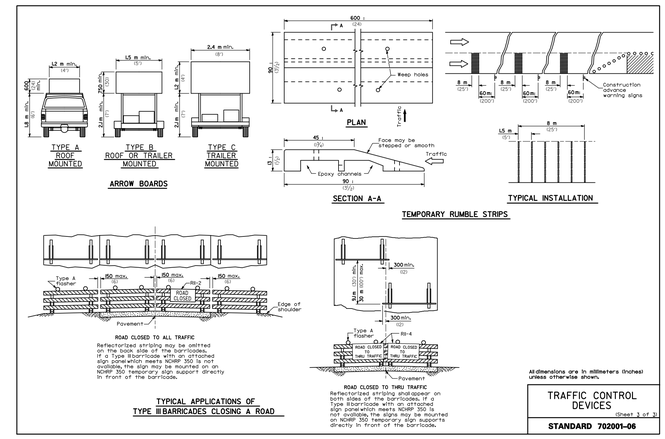

NOTES:

1. ANY LANE CLOSURES MUST COMPLY WITH THE ABOVE OR OTHER STANDARDS BY THE THE ILLINOIS DEPARTMENT OF TRANSPORTATION (IDOT).

2. ALL PLANS FOR STAGING OF CONSTRUCTION AND TEMPORARY LANE CLOSURES ON MILWAUKEE AVENUE MUST BE SUBMITTED AND APPROVED.

3. ALL TEMPORARY CLOSURES MUST OCCUR AT TIMES APPROVED BY IDOT.

4. ANY WORK REQUIRING THE CLOSURE OF ONE OR MORE LANES OF TRAFFIC MUST BE PLANNED TO REOPEN ALL LANES TO TRAFFIC BY A TIME SPECIFIED BY IDOT.

5. ALL TRAFFIC CONTROL DEVICES MUST COMPLY WITH IDOT STANDARDS SHOWN ABOVE AND AS DESCRIBED IN IDOT STANDARD SPECIFICATIONS.

US ARMY CORPS OF ENGINEERS
Chicago District

SYMBOL	AMENDMENT DESCRIPTION	DATE APPROVED	SYMBOL	DESCRIPTION	DATE APPROVED

DESIGNED BY: MSC | DATE: 08-18-2008
DRAWN BY: MSC | SCALE:
CHECKED BY: DRH | CONTRACT NUMBER: W912P6-08-B-0003
SUBMITTED BY: | DATE:

U.S. ARMY ENGINEER DISTRICT
CORPS OF ENGINEERS
CHICAGO, ILLINOIS

CTE AECOM
303 East Wacker Drive, Suite 600, Chicago, Illinois 60601-5276
T 312.373.6700 F 312.373.6799 www.aecom.com

DES PLAINES RIVER, ILLINOIS
LOCAL FLOOD PROTECTION
FLOODWALL 37
RIVER RD/MILWAUKEE AVE.
MILWAUKEE AVENUE FLOOD GATE
MAINTENANCE OF TRAFFIC
STANDARDS AND NOTES

SHEET REFERENCE NUMBER:
C-52A
SHEET 68 OF 131

PLOT DATE: 8/18/2008
FILENAME: $FILE$

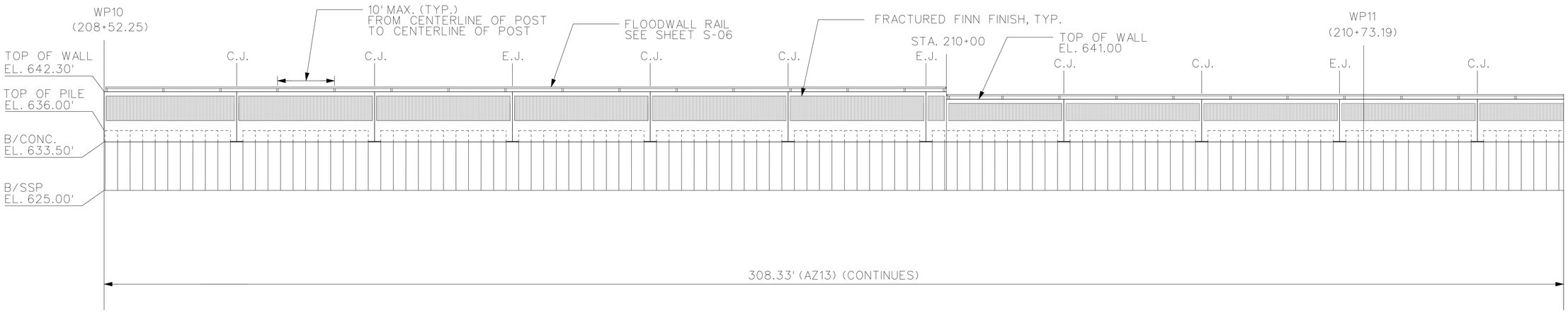

FLOODWALL ELEVATIONS (RIVERSIDE)

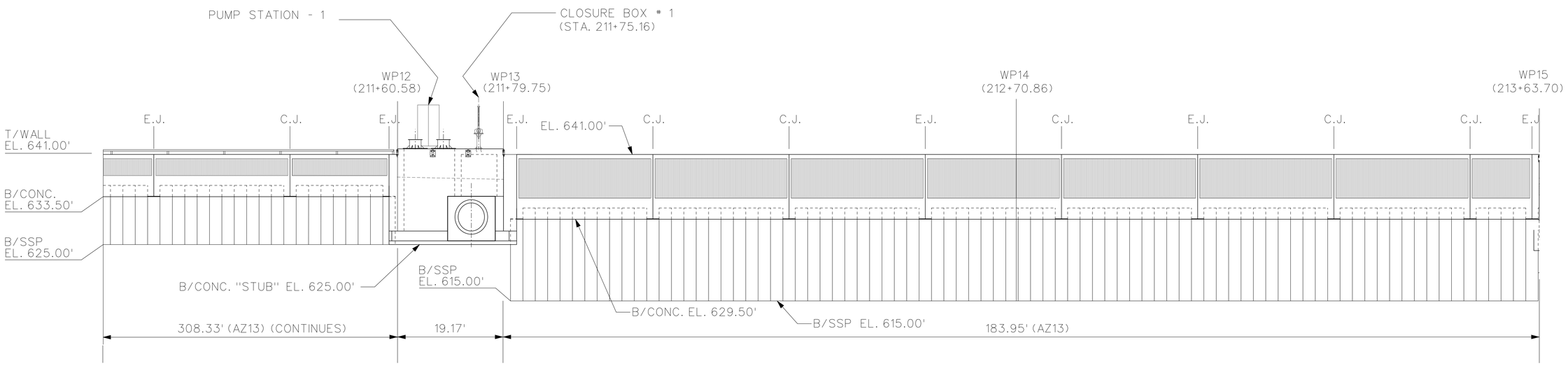

FLOODWALL ELEVATIONS (RIVERSIDE)

8 6 4 2 0 8 16FT

SCALE: 1/8"=1'-0"

GENERAL NOTES

1. EXPANSION/ISOLATION JOINT NOT TO EXCEED 75' AND TO BE PLACED AT ALL WALL-STRUCTURE INTERFACES. C.J SPACING SHALL NOT EXCEED 25' O.C.
2. LOCATION OF EXPANSION JOINTS AT WALL-STRUCTURE INTERFACE WILL VARY DEPENDING ON THE PILE LOCATION AS DETAILED ON INDIVIDUAL STRUCTURAL DRAWINGS.
3. CONTRACTOR SHALL MAINTAIN CENTERLINE OF SSP WITH FLOODWALL CENTERLINE AT BENDS THROUGH USE OF FABRICATED BENDS OR THROUGH ALLOWABLE ROTATION OF SHEET PILE INTERLOCKS. SEE SHEET S-07 FOR TYPICAL CORNER DETAILS. CONTRACTOR SHALL SUBMIT ALL DETAILS FOR APPROVAL WITH SHEET PILE SHOP DRAWINGS. CONTRACTOR IS RESPONSIBLE FOR FINAL LAYOUT OF SHEET PILE TO FIT THE ALIGNMENT AND SHALL SUBMIT ALL DETAILS INCLUDING USE OF SPECIAL SECTIONS TO FIT THE SPECIFIED LENGTHS AND WORK POINT LOCATIONS.
4. CONTRACTOR SHALL PROVIDE TEMPORARY COFFERDAMS AS REQUIRED TO CONSTRUCT ALL STRUCTURES.

US Army Corps of Engineers
Chicago District

SYMBOL	AMENDMENT DESCRIPTION	DATE	APPROVED	SYMBOL	DESCRIPTION	DATE	APPROVED

DESIGNED BY: D.W.F.
DATE: 08-18-2008
DRAWN BY: D.B.
SCALE: AS SHOWN
CHECKED BY: J.P.
DRAWING CODE:
REVIEWED BY: S.T.
SOLICITATION NUMBER: W912P6-08-B-0003

U.S. ARMY ENGINEER DISTRICT
CORPS OF ENGINEERS
CHICAGO, ILLINOIS

DES PLAINES RIVER, ILLINOIS
LOCAL FLOOD PROTECTION
FLOODWALL 37
RIVER RD/ MILWAUKEE AVE.
STATION 208+52.25
TO STATION 213+63.70

SHEET REFERENCE NUMBER:
S-01
SHEET 69 OF 131

PLOT DATE: 8/18/2008
FILENAME: Wall-New S-01.dgn

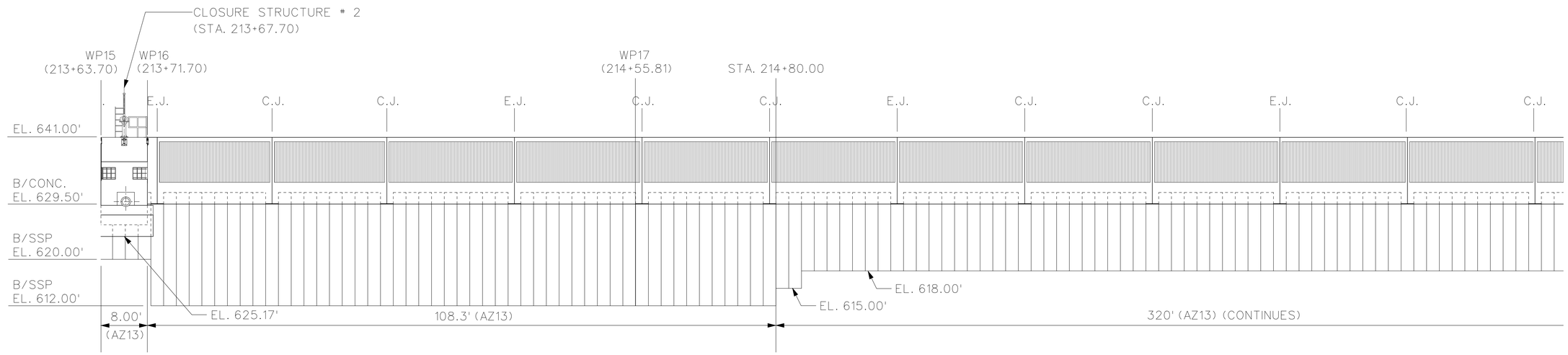

FLOODWALL ELEVATIONS (RIVERSIDE)

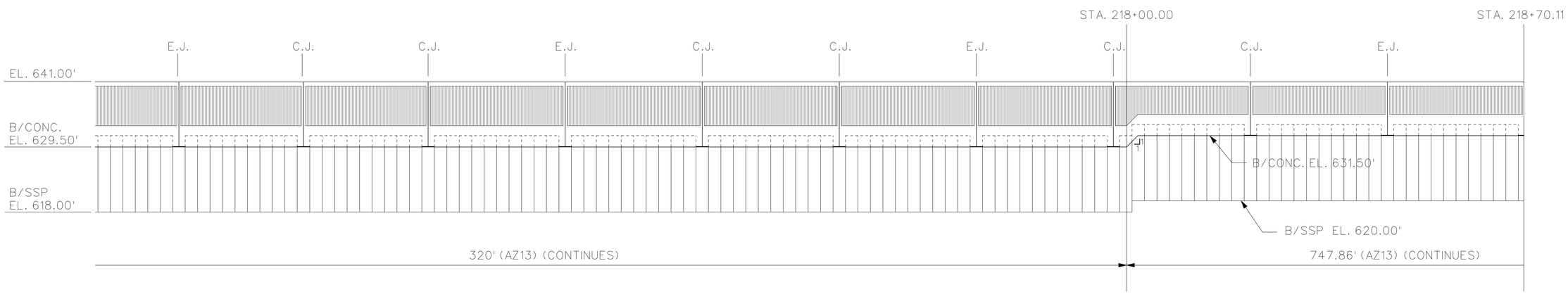

FLOODWALL ELEVATIONS (RIVERSIDE)

8 6 4 2 0 8 16FT

SCALE: 1/8"=1'-0"

US Army Corps of Engineers
Chicago District

SYMBOL	AMENDMENT DESCRIPTION	DATE APPROVED	SYMBOL	DESCRIPTION	DATE APPROVED

DESIGNED BY: D.W.F.
DRAWN BY: D.B.
CHECKED BY: J.P.
REVIEWED BY: S.T.
DATE: 08-18-2008
SCALE: AS SHOWN
DRAWING CODE:
SOLICITATION NUMBER: W912P6-08-B-0003

U.S. ARMY ENGINEER DISTRICT
CORPS OF ENGINEERS
CHICAGO, ILLINOIS

DES PLAINES RIVER, ILLINOIS
LOCAL FLOOD PROTECTION
FLOODWALL 37
RIVER RD/ MILWAUKEE AVE.
STATION 213+63.70
TO STATION 218+70.11

SHEET REFERENCE NUMBER:
S-02
SHEET 70 OF 131

PLOT DATE: 8/18/2008
FILENAME: Wall-New S-02.dgn

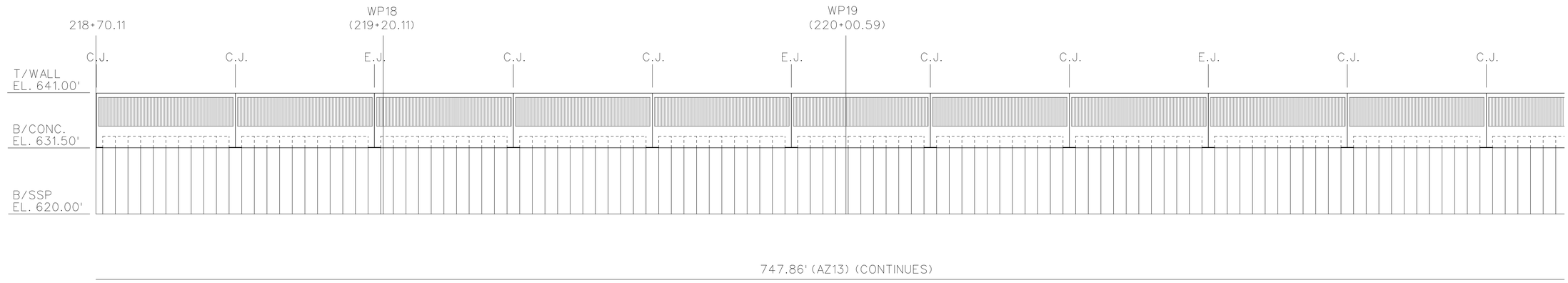

FLOODWALL ELEVATIONS (RIVERSIDE)

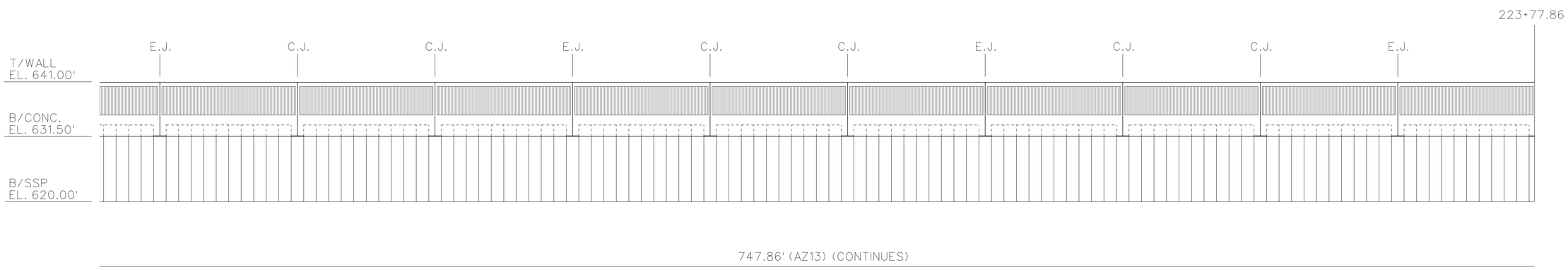

FLOODWALL ELEVATIONS (RIVERSIDE)

8 6 4 2 0 8 16FT

SCALE: 1/8"=1'-0"

US Army Corps of Engineers
Chicago District

SYMBOL	AMENDMENT DESCRIPTION	DATE APPROVED	SYMBOL	DESCRIPTION	DATE APPROVED

DESIGNED BY: D.W.F. | DATE: 08-18-2008
DRAWN BY: D.B. | SCALE: AS SHOWN
CHECKED BY: J.P. | DRAWING CODE:
REVIEWED BY: S.T. | SOLICITATION NUMBER: W912P6-08-B-0003

U.S. ARMY ENGINEER DISTRICT
CORPS OF ENGINEERS
CHICAGO, ILLINOIS

DES PLAINES RIVER, ILLINOIS
LOCAL FLOOD PROTECTION
FLOODWALL 37
RIVER RD/ MILWAUKEE AVE.
STATION 218+70.11 TO
STATION 223+77.86

SHEET REFERENCE NUMBER:
S-03
SHEET 71 OF 131

PLOT DATE: 8/18/2008
FILENAME: Wall-New S-03.dgn

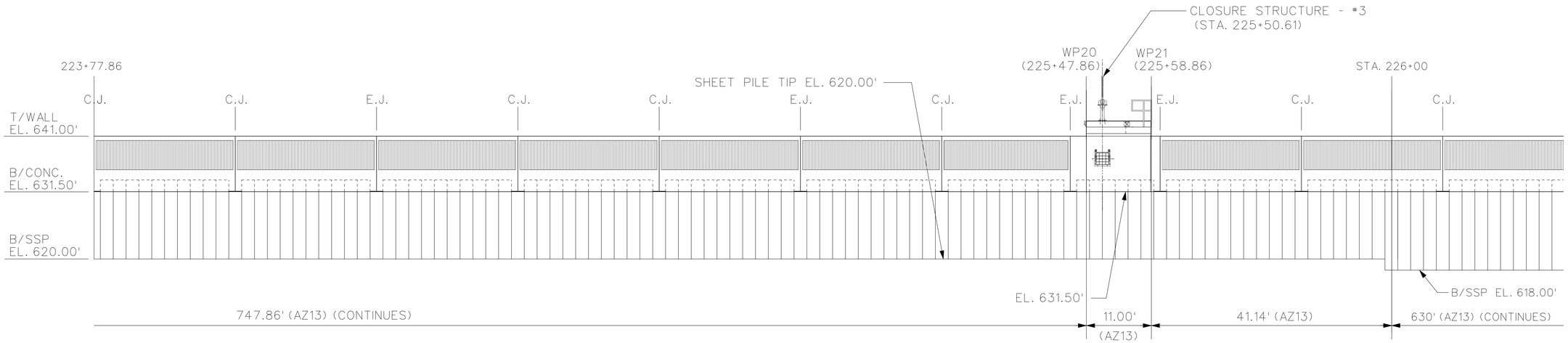

FLOODWALL ELEVATIONS (RIVERSIDE)

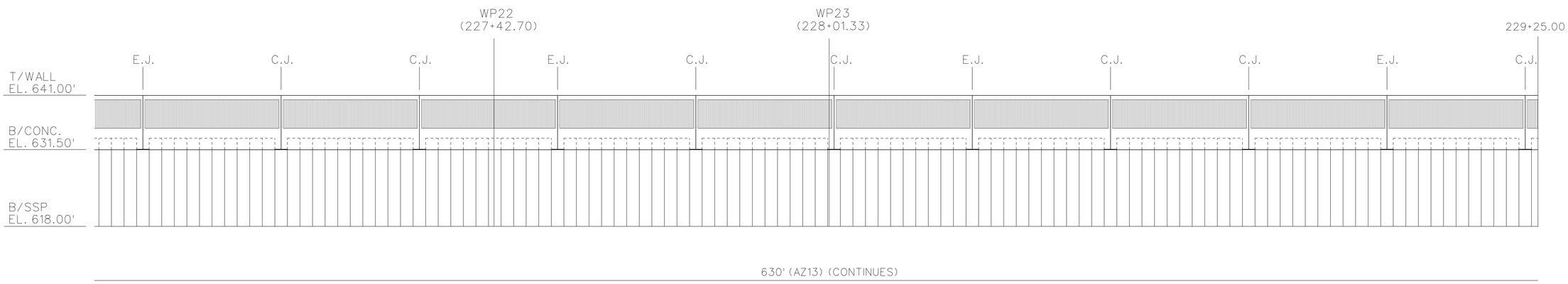

FLOODWALL ELEVATIONS (RIVERSIDE)

8 6 4 2 0 8 16FT

SCALE: 1/8"=1'-0"

US Army Corps of Engineers
Chicago District

SYMBOL	AMENDMENT DESCRIPTION	DATE APPROVED	SYMBOL	DESCRIPTION	DATE APPROVED

DESIGNED BY: D.W.F.	DATE: 08-18-2008		
DRAWN BY: D.B.	SCALE: AS SHOWN		
CHECKED BY: J.P.	DRAWING CODE:		
REVIEWED BY: S.T.	SOLICITATION NUMBER: W912P6-08-B-0003		

U.S. ARMY ENGINEER DISTRICT
CORPS OF ENGINEERS
CHICAGO, ILLINOIS

DES PLAINES RIVER, ILLINOIS
LOCAL FLOOD PROTECTION
FLOODWALL 37
RIVER RD/ MILWAUKEE AVE.
STATION 223+77.86 TO
STATION 229+25.00

SHEET REFERENCE NUMBER:
S-04
SHEET 72 OF 131

PLOT DATE: 8/18/2008
FILENAME: Wall-New S-04.dgn

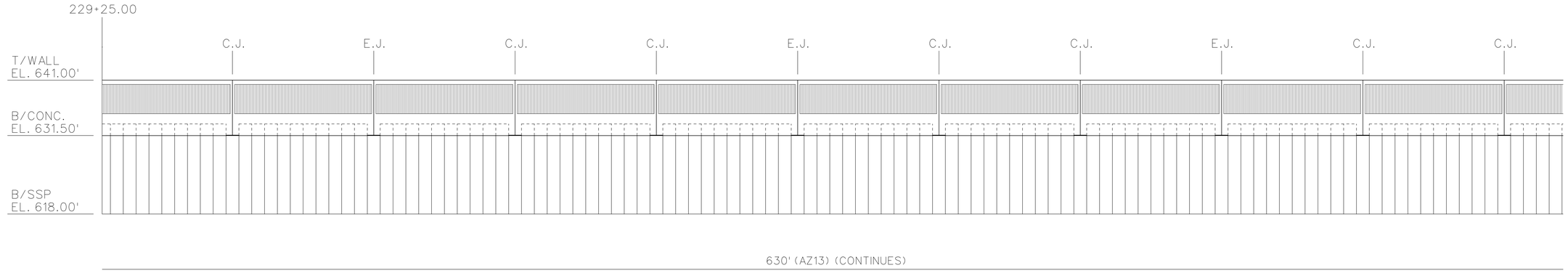

FLOODWALL ELEVATIONS (RIVERSIDE)

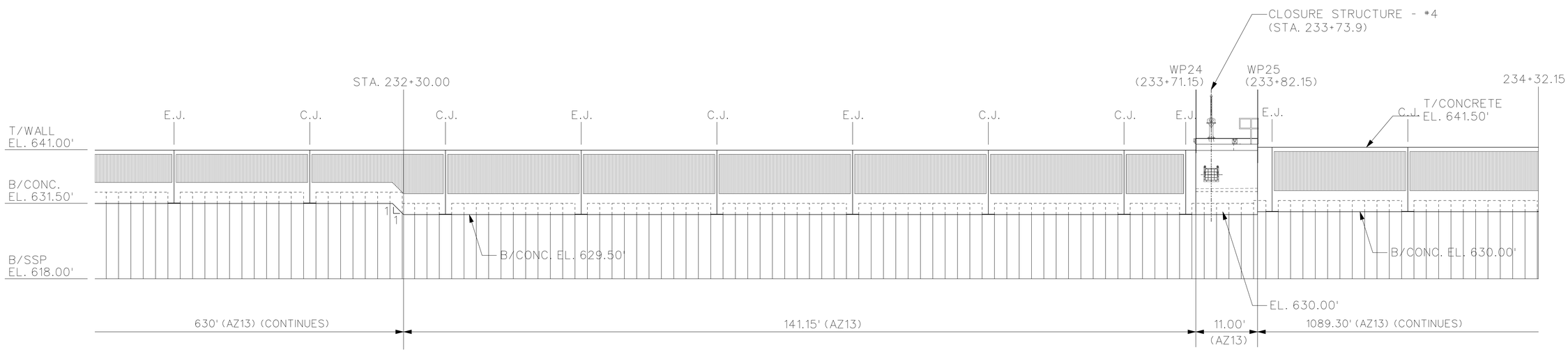

FLOODWALL ELEVATIONS (RIVERSIDE)

8 6 4 2 0 8 16FT

SCALE: 1/8"=1'-0"

US Army Corps of Engineers
Chicago District

SYMBOL	AMENDMENT DESCRIPTION	DATE APPROVED	SYMBOL	DESCRIPTION	DATE APPROVED

DESIGNED BY: D.W.F.
DATE: 08-18-2008
DRAWN BY: D.B.
SCALE: AS SHOWN
CHECKED BY: J.P.
DRAWING CODE:
REVIEWED BY: S.T.
SOLICITATION NUMBER: W912P6-08-B-0003

U.S. ARMY ENGINEER DISTRICT
CORPS OF ENGINEERS
CHICAGO, ILLINOIS

DES PLAINES RIVER, ILLINOIS
LOCAL FLOOD PROTECTION
FLOODWALL 37
RIVER RD/ MILWAUKEE AVE.
STATION 229+25.00 TO
STATION 234+32.15

SHEET REFERENCE NUMBER:
S-04A
SHEET 73 OF 131

PLOT DATE: 8/18/2008
FILENAME: Wall-New S-04A.dgn

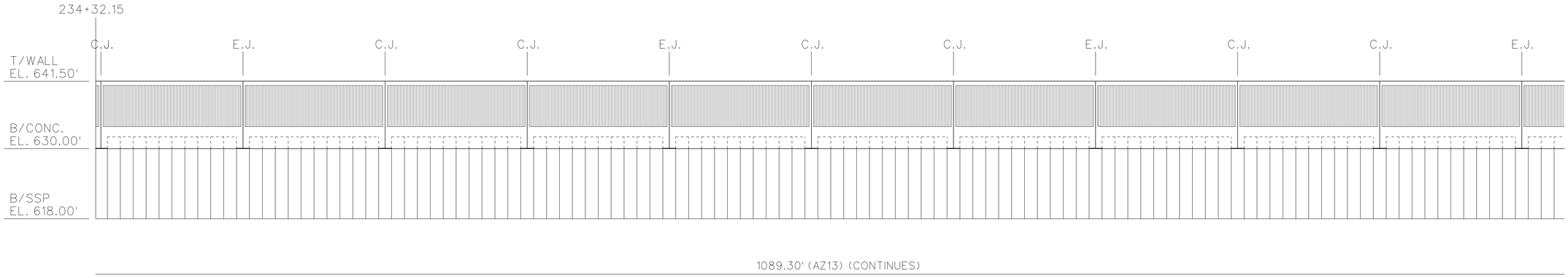

FLOODWALL ELEVATIONS (RIVERSIDE)

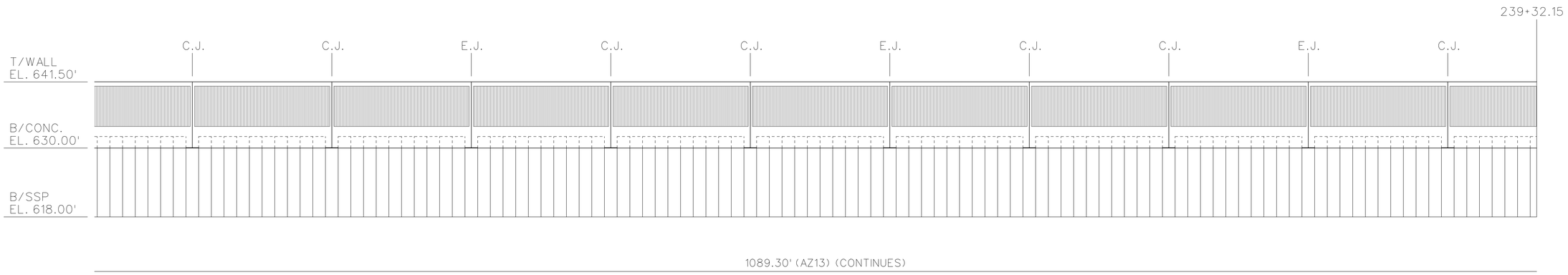

FLOODWALL ELEVATIONS (RIVERSIDE)

8 6 4 2 0 8 16FT

SCALE: 1/8"=1'-0"

US Army Corps of Engineers
Chicago District

SYMBOL	AMENDMENT DESCRIPTION	DATE APPROVED	SYMBOL	DESCRIPTION	DATE APPROVED

DESIGNED BY: D.W.F.	DATE: 08-18-2008		
DRAWN BY: D.B.	SCALE: AS SHOWN		
CHECKED BY: J.P.	DRAWING CODE:		
REVIEWED BY: S.T.	SOLICITATION NUMBER: W912P6-08-B-0003		

U.S. ARMY ENGINEER DISTRICT
CORPS OF ENGINEERS
CHICAGO, ILLINOIS

DES PLAINES RIVER, ILLINOIS
LOCAL FLOOD PROTECTION
FLOODWALL 37
RIVER RD/ MILWAUKEE AVE.
STATION 234+32.15 TO
STATION 239+32.15

SHEET REFERENCE NUMBER:
S-04B
SHEET 74 OF 131

PLOT DATE: 8/18/2008
FILENAME: Wall-New S-04B.dgn

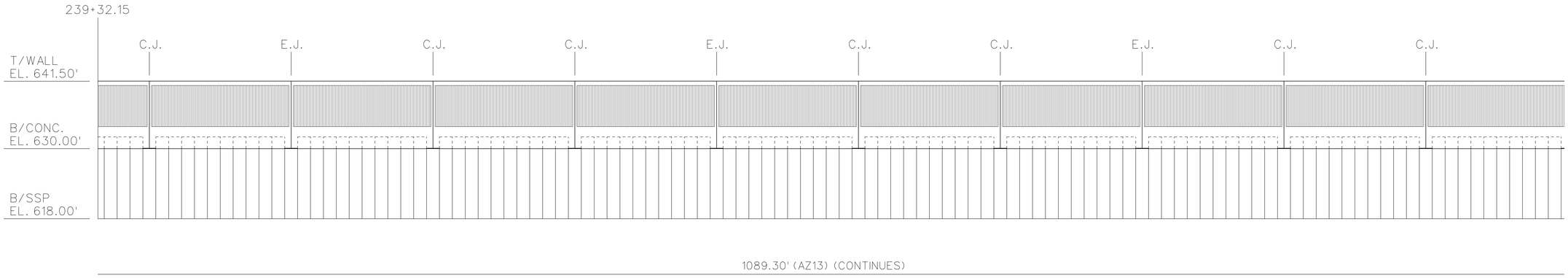

FLOODWALL ELEVATIONS (RIVERSIDE)

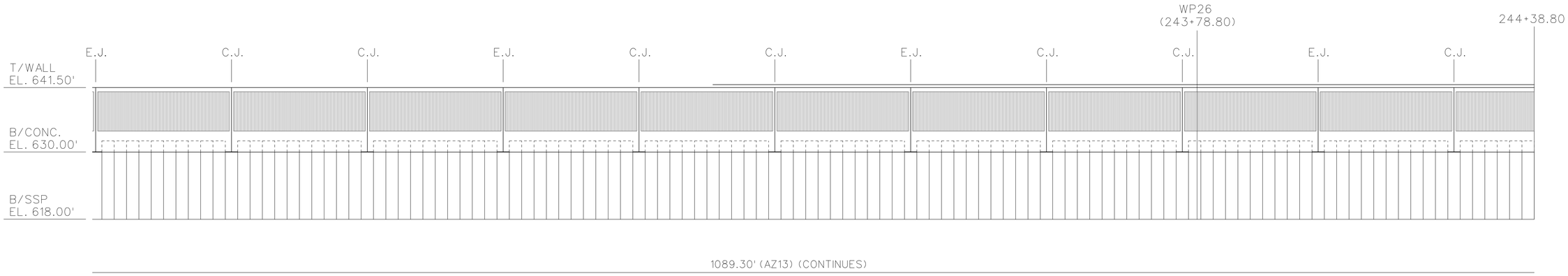

FLOODWALL ELEVATIONS (RIVERSIDE)

8 6 4 2 0 8 16FT

SCALE: 1/8"=1'-0"

US Army Corps of Engineers
Chicago District

SYMBOL	AMENDMENT DESCRIPTION	DATE APPROVED	SYMBOL	DESCRIPTION	DATE APPROVED

DESIGNED BY: D.W.F.
DATE: 08-18-2008
DRAWN BY: D.B.
SCALE: AS SHOWN
CHECKED BY: J.P.
DRAWING CODE:
REVIEWED BY: S.T.
SOLICITATION NUMBER: W912P6-08-B-0003

U.S. ARMY ENGINEER DISTRICT
CORPS OF ENGINEERS
CHICAGO, ILLINOIS

DES PLAINES RIVER, ILLINOIS
LOCAL FLOOD PROTECTION
FLOODWALL 37
RIVER RD/ MILWAUKEE AVE.
STATION 239+32.15 TO
STATION 244+38.80

SHEET REFERENCE NUMBER:
S-04C
SHEET 75 OF 131

PLOT DATE: 8/18/2008
FILENAME: Wall-New S-04C.dgn

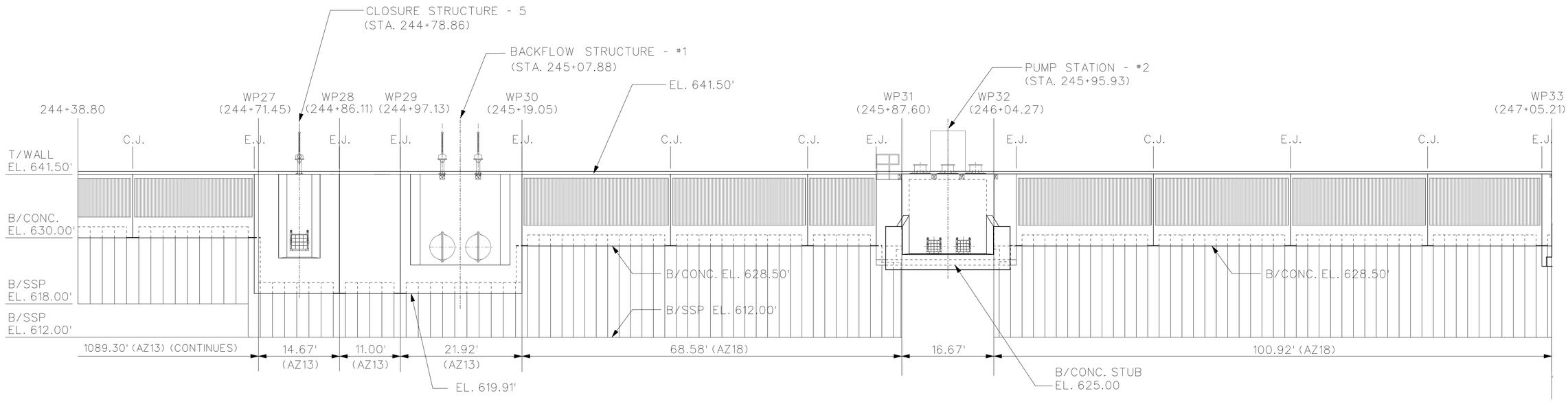

FLOODWALL ELEVATIONS (RIVERSIDE)

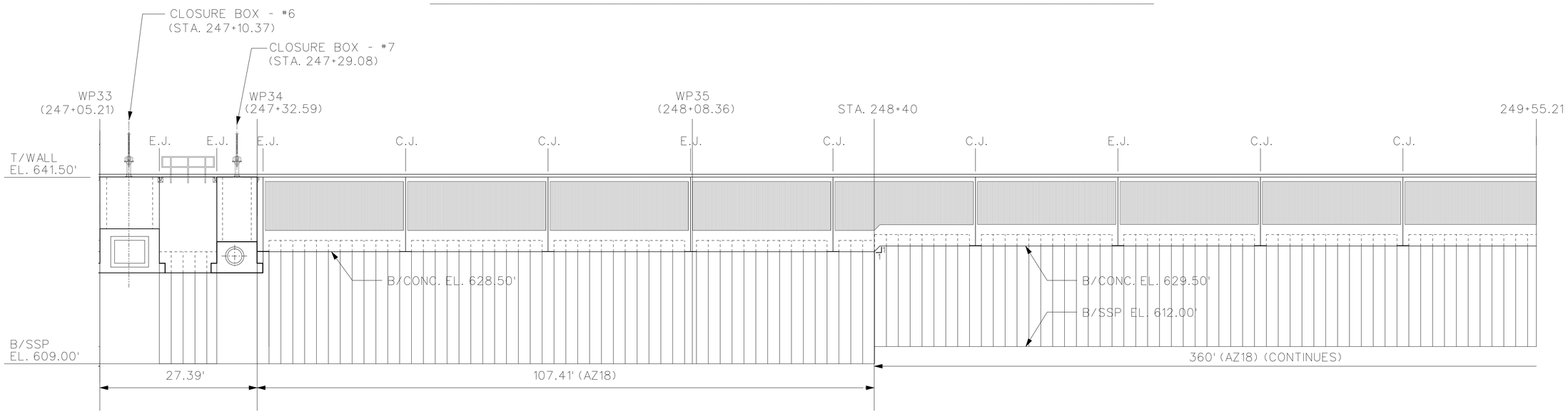

FLOODWALL ELEVATIONS (RIVERSIDE)

8 6 4 2 0 8 16FT

SCALE: 1/8"=1'-0"

US Army Corps of Engineers
Chicago District

SYMBOL	AMENDMENT DESCRIPTION	DATE APPROVED	SYMBOL	DESCRIPTION	DATE APPROVED

DESIGNED BY: D.W.F. | DATE: 08-18-2008
DRAWN BY: D.B. | SCALE: AS SHOWN
CHECKED BY: J.P. | DRAWING CODE:
REVIEWED BY: S.T. | SOLICITATION NUMBER: W912P6-08-B-0003

U.S. ARMY ENGINEER DISTRICT
CORPS OF ENGINEERS
CHICAGO, ILLINOIS

DES PLAINES RIVER, ILLINOIS
LOCAL FLOOD PROTECTION
FLOODWALL 37
RIVER RD/ MILWAUKEE AVE.
STATION 244+38.80 TO
STATION 249+55.21

SHEET REFERENCE NUMBER:
S-04D
SHEET 76 OF 131

PLOT DATE: 8/18/2008
FILENAME: Wall-New S-040.dgn

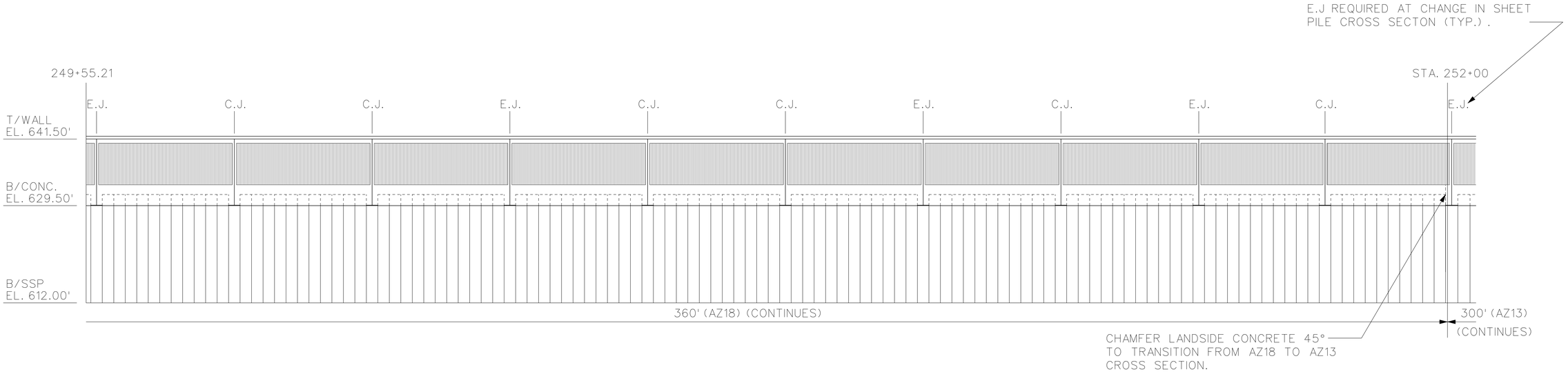

FLOODWALL ELEVATIONS (RIVERSIDE)

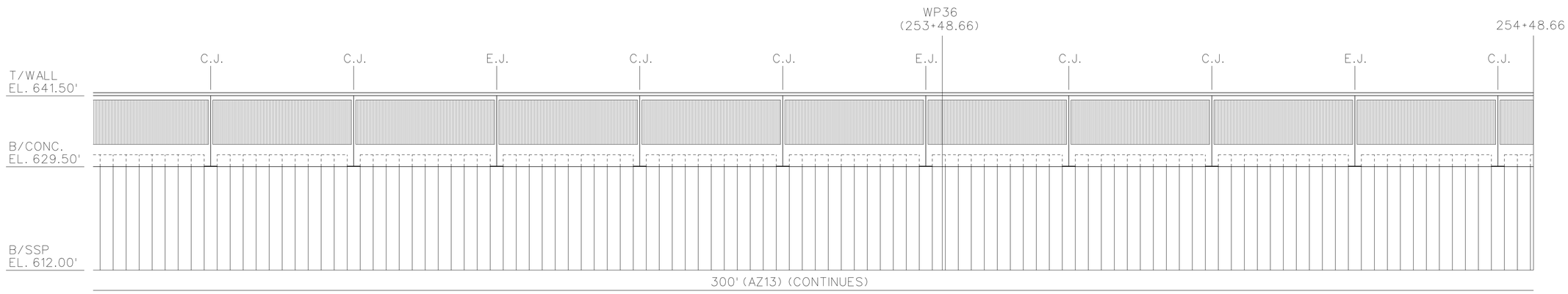

FLOODWALL ELEVATIONS (RIVERSIDE)

8 6 4 2 0 8 16FT

SCALE: 1/8"=1'-0"

US Army Corps of Engineers
Chicago District

SYMBOL	AMENDMENT DESCRIPTION	DATE APPROVED	SYMBOL	DESCRIPTION	DATE APPROVED

DESIGNED BY: D.W.F.
DRAWN BY: D.B.
CHECKED BY: J.P.
REVIEWED BY: S.T.
DATE: 08-18-2008
SCALE: AS SHOWN
DRAWING CODE:
SOLICITATION NUMBER: W912P6-08-B-0003

U.S. ARMY ENGINEER DISTRICT
CORPS OF ENGINEERS
CHICAGO, ILLINOIS

DES PLAINES RIVER, ILLINOIS
LOCAL FLOOD PROTECTION
FLOODWALL 37
RIVER RD/ MILWAUKEE AVE.
STATION 249+55.21 TO
STATION 254+48.66

SHEET REFERENCE NUMBER:
S-04E
SHEET 77 OF 131

PLOT DATE: 8/18/2008
FILENAME: Wall-New S-04E.dgn

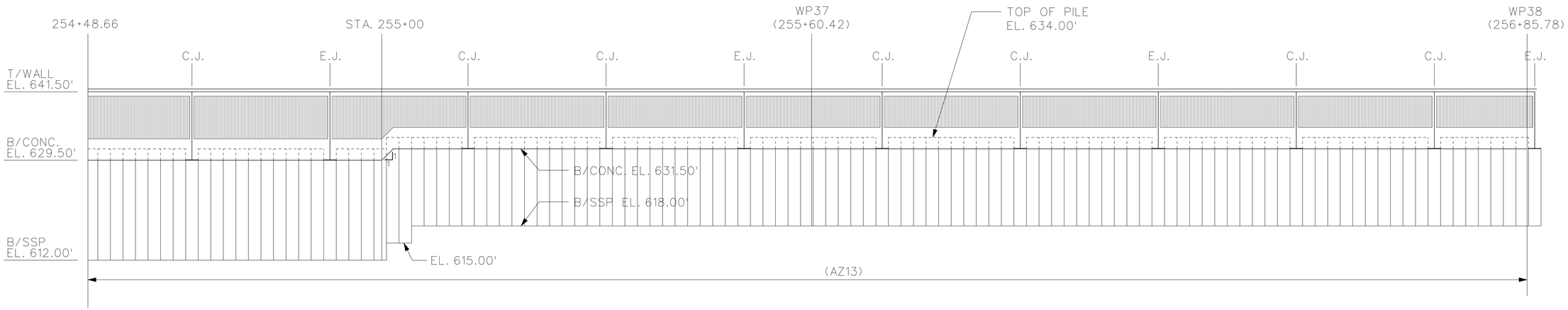

FLOODWALL ELEVATIONS (RIVERSIDE)

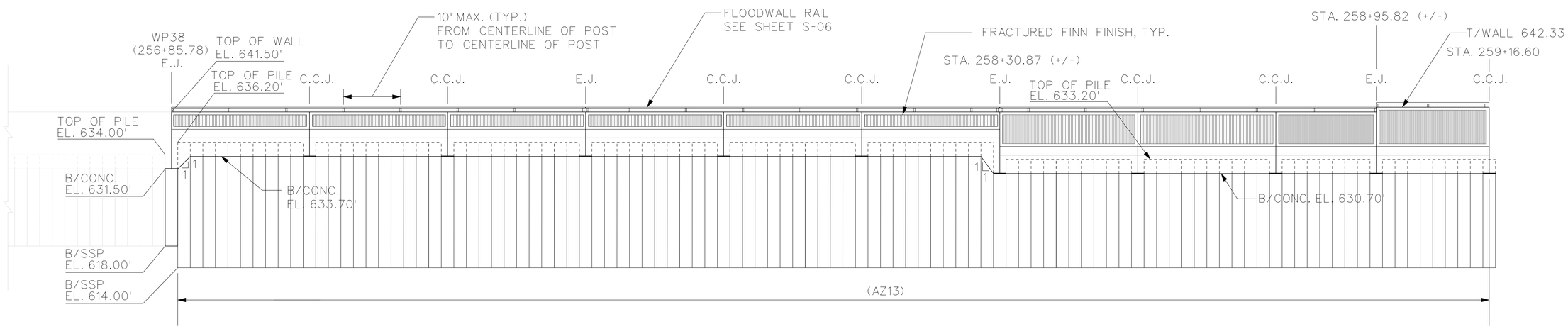

FLOODWALL ELEVATIONS (RIVERSIDE)

8 6 4 2 0 8 16FT

SCALE: 1/8"=1'-0"

US Army Corps of Engineers
Chicago District

SYMBOL	AMENDMENT DESCRIPTION	DATE APPROVED	SYMBOL	DESCRIPTION	DATE APPROVED

DESIGNED BY: D.W.F.
DATE: 08-18-2008
DRAWN BY: M.A.N.
SCALE: AS SHOWN
CHECKED BY: J.P.
DRAWING CODE:
REVIEWED BY: S.T.
SOLICITATION NUMBER: W912P6-08-B-0003

U.S. ARMY ENGINEER DISTRICT
CORPS OF ENGINEERS
CHICAGO, ILLINOIS

DES PLAINES RIVER, ILLINOIS
LOCAL FLOOD PROTECTION
FLOODWALL 37
RIVER RD/ MILWAUKEE AVE.
STATION 254+48.66 TO
STATION 259+16.60

SHEET REFERENCE NUMBER:
S-04F
SHEET 78 OF 131

PLOT DATE: 8/18/2008
FILENAME: Wall-New S-04F.dgn

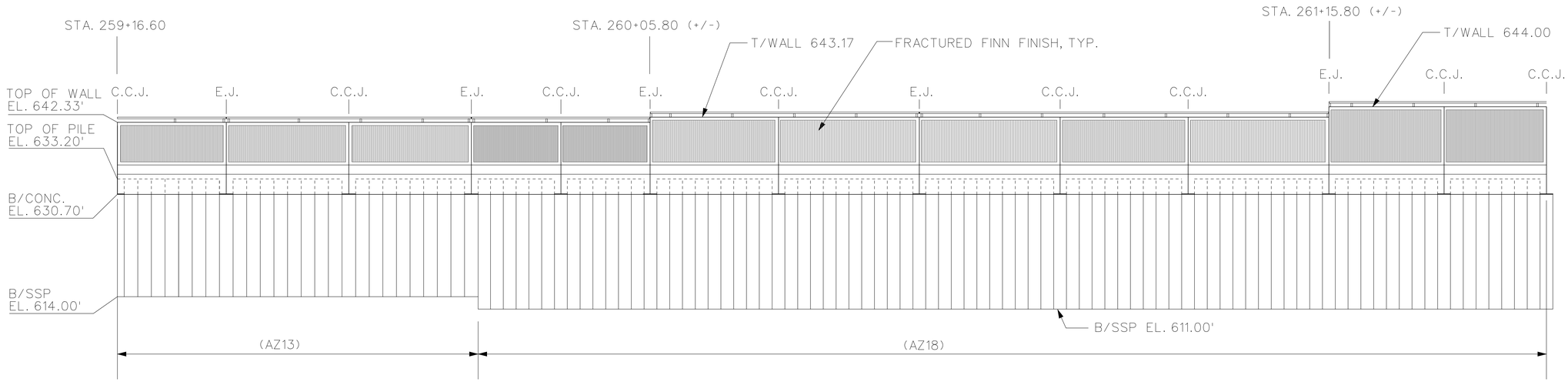

FLOODWALL ELEVATIONS (RIVERSIDE)

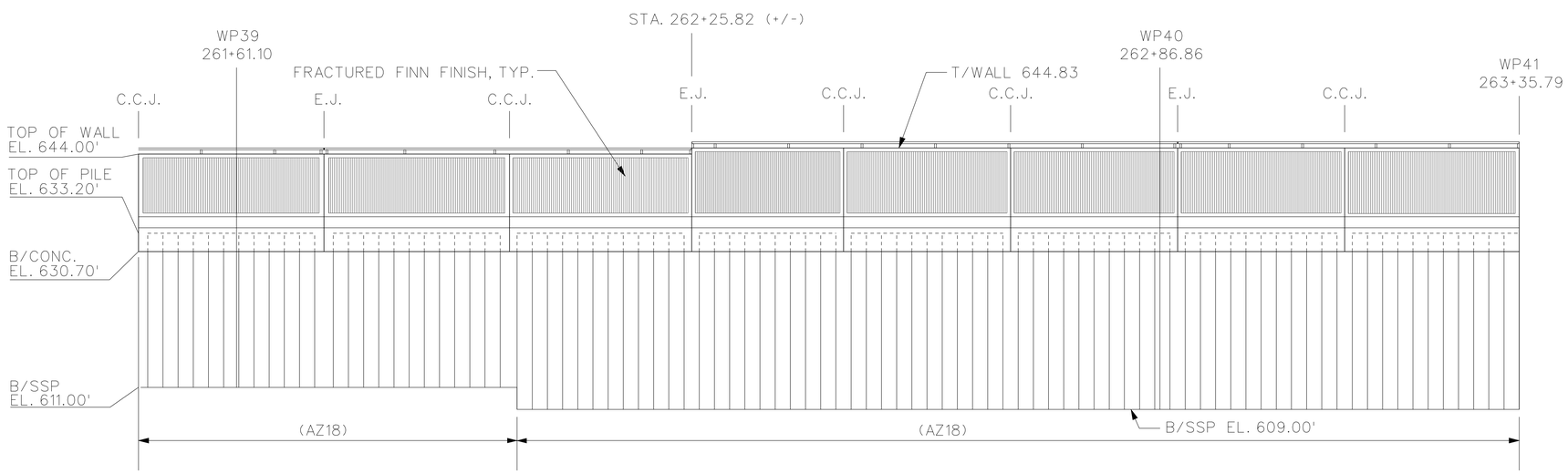

FLOODWALL ELEVATIONS (RIVERSIDE)

GENERAL NOTES

1. EXPANSION/ISOLATION JOINT NOT TO EXCEED 75'. C.J SPACING SHALL NOT EXCEED 25' O.C. EXPANSION JOINTS ARE REQUIRED AT CHANGES IN WALL CROSS SECTIONS AND AT LOCATIONS WHERE WALLS CHANGE ELEVATION.
2. LOCATION OF EXPANSION AND C.C.J. JOINTS WILL VARY DEPENDING ON THE PILE LOCATION AND TO FALL OVER PILE CENTERLINES.
3. CONTRACTOR SHALL MAINTAIN CENTERLINE OF SSP WITH FLOODWALL CENTERLINE AT BENDS THROUGH USE OF FABRICATED BENDS OR THROUGH ALLOWABLE ROTATION OF SHEET PILE INTERLOCKS. SEE SHEET S-06 FOR TYPICAL CORNER DETAILS. CONTRACTOR SHALL SUBMIT ALL DETAILS FOR APPROVAL WITH SHEET PILE SHOP DRAWINGS. CONTRACTOR IS RESPONSIBLE FOR FINAL LAYOUT OF SHEET PILE TO FIT THE ALIGNMENT AND SHALL SUBMIT ALL DETAILS INCLUDING USE OF SPECIAL SECTIONS TO FIT THE SPECIFIED LENGTHS AND WORK POINT LOCATIONS.
4. CONTRACTOR SHALL PROVIDE TEMPORARY COFFERDAMS AS REQUIRED TO CONSTRUCT ALL STRUCTURES.

8 6 4 2 0 8 16FT

SCALE: 1/8"=1'-0"

US Army Corps of Engineers
Chicago District

SYMBOL	AMENDMENT DESCRIPTION	DATE APPROVED	SYMBOL	DESCRIPTION	DATE APPROVED

DESIGNED BY: D.W.F.
DATE: 08-18-2008
DRAWN BY: M.A.N.
SCALE: AS SHOWN
CHECKED BY: J.P.
DRAWING CODE:
REVIEWED BY: S.T.
SOLICITATION NUMBER: W912P6-08-B-0003

U.S. ARMY ENGINEER DISTRICT
CORPS OF ENGINEERS
CHICAGO, ILLINOIS

DES PLAINES RIVER, ILLINOIS
LOCAL FLOOD PROTECTION
FLOODWALL 37
RIVER RD/ MILWAUKEE AVE.
STATION 259+16.60
TO STATION 263+35.79

SHEET REFERENCE NUMBER:
S-04G
SHEET 79 OF 131

PLOT DATE: 8/18/2008
FILENAME: Wall-New S-04G.dgn

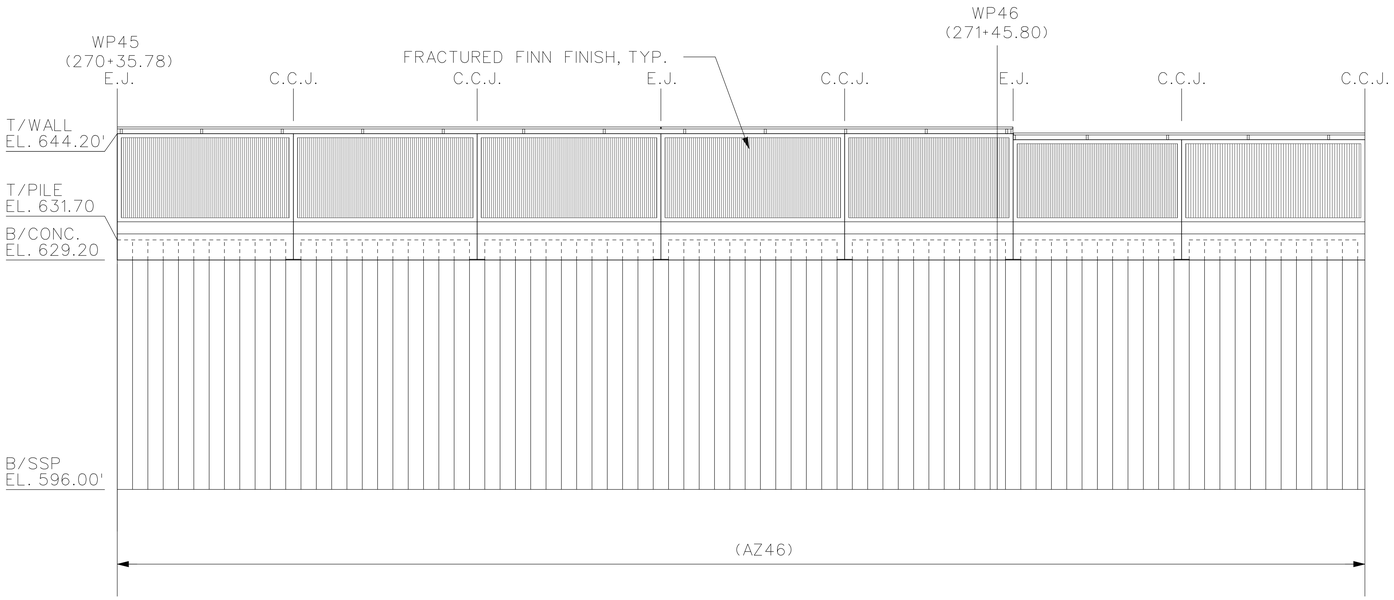

FLOODWALL ELEVATIONS (RIVERSIDE)

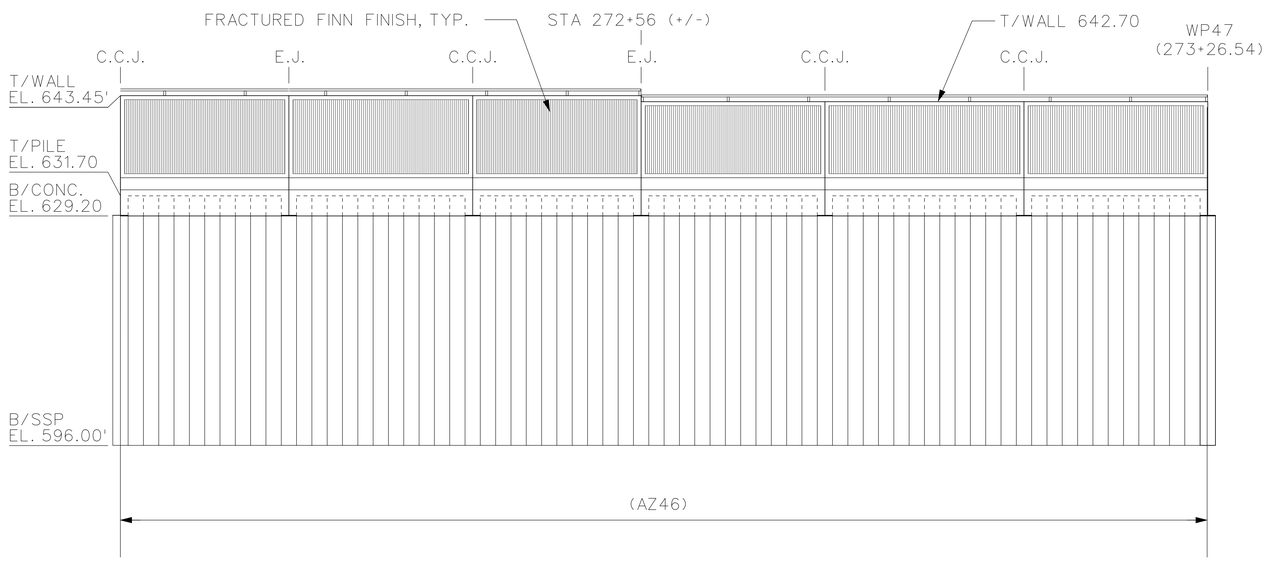

FLOODWALL ELEVATIONS (RIVERSIDE)

8 6 4 2 0 8 16FT

SCALE: 1/8"=1'-0"

US Army Corps of Engineers
Chicago District

SYMBOL	AMENDMENT DESCRIPTION	DATE APPROVED	SYMBOL	DESCRIPTION	DATE APPROVED

DESIGNED BY: D.W.F.
DATE: 08-18-2008
DRAWN BY: M.A.N.
SCALE: AS SHOWN
CHECKED BY: J.P.
DRAWING CODE:
REVIEWED BY: S.T.
SOLICITATION NUMBER: W912P6-08-B-0003

U.S. ARMY ENGINEER DISTRICT
CORPS OF ENGINEERS
CHICAGO, ILLINOIS

DES PLAINES RIVER, ILLINOIS
LOCAL FLOOD PROTECTION
FLOODWALL 37
RIVER RD/ MILWAUKEE AVE.
STATION 270+35.78 TO
STATION 273+26.54

SHEET REFERENCE NUMBER:
S-04H
SHEET 80 OF 131

PLOT DATE: 8/18/2008
FILENAME: Wall-New S-04H.dgn

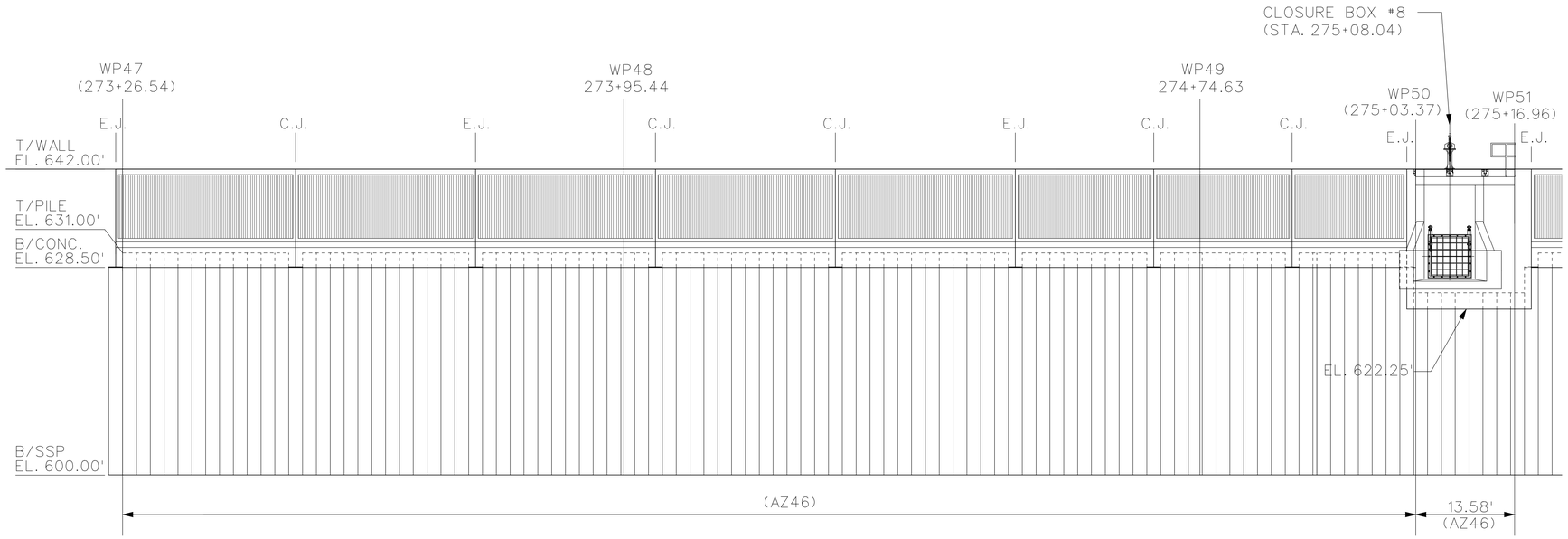

FLOODWALL ELEVATIONS (RIVERSIDE)

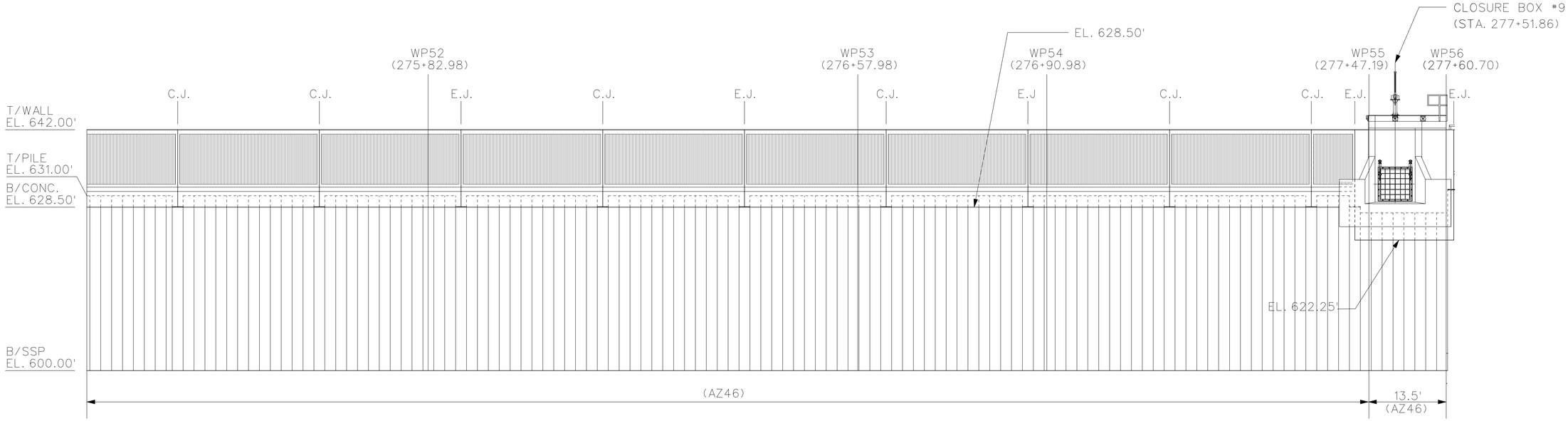

FLOODWALL ELEVATIONS (RIVERSIDE)

8 6 4 2 0 8 16FT

SCALE: 1/8"=1'-0"

US Army Corps of Engineers
Chicago District

SYMBOL	AMENDMENT DESCRIPTION	DATE APPROVED	SYMBOL	DESCRIPTION	DATE APPROVED

DESIGNED BY: D.W.F.
DATE: 08-18-2008
DRAWN BY: M.A.N.
SCALE: AS SHOWN
CHECKED BY: J.P.
DRAWING CODE:
REVIEWED BY: S.T.
SOLICITATION NUMBER: W912P6-08-B-0003

U.S. ARMY ENGINEER DISTRICT
CORPS OF ENGINEERS
CHICAGO, ILLINOIS

DES PLAINES RIVER, ILLINOIS
LOCAL FLOOD PROTECTION
FLOODWALL 37
RIVER RD/ MILWAUKEE AVE.
STATION 273+26.54 TO
STATION 277+60.70

SHEET REFERENCE NUMBER:
S-041
SHEET 81 OF 131

PLOT DATE: 8/18/2008
FILENAME: Wall-New S-041.dgn

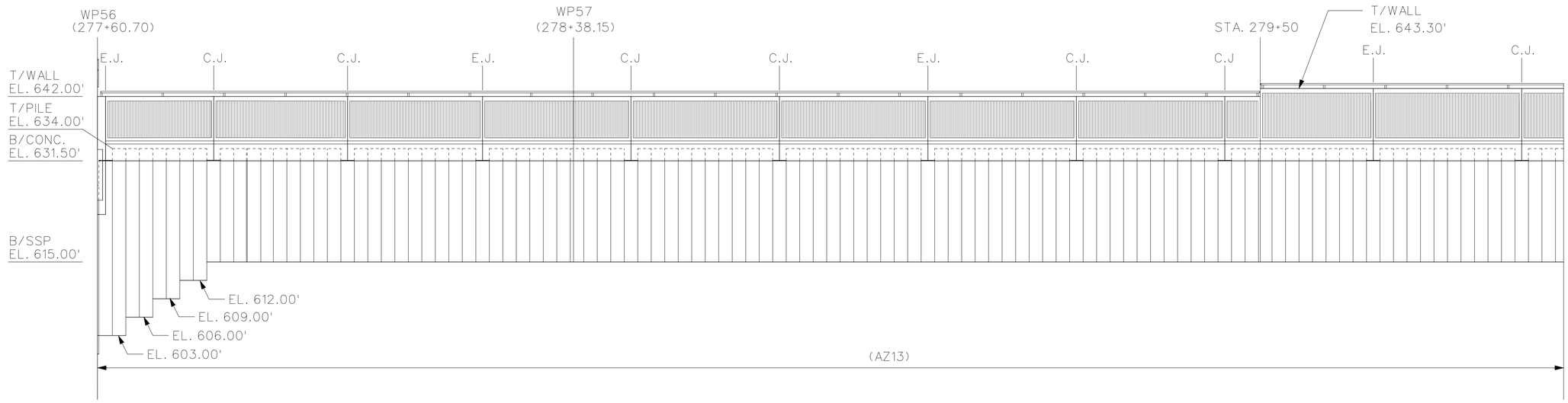

FLOODWALL ELEVATIONS (RIVERSIDE)

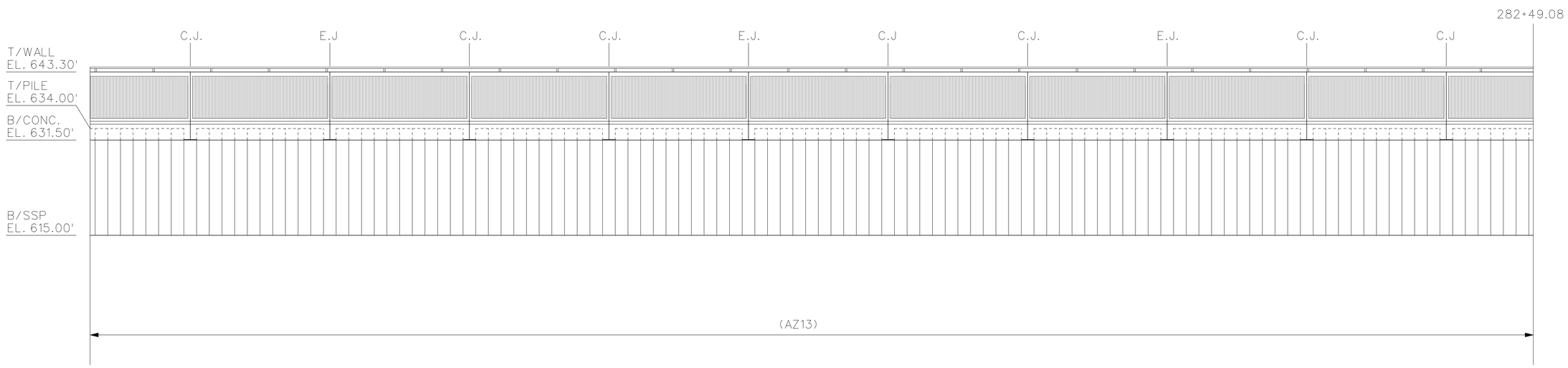

FLOODWALL ELEVATIONS (RIVERSIDE)

8 6 4 2 0 8 16FT

SCALE: 1/8"=1'-0"

US Army Corps of Engineers
Chicago District

SYMBOL	AMENDMENT DESCRIPTION	DATE APPROVED	SYMBOL	DESCRIPTION	DATE APPROVED

DESIGNED BY: D.W.F.
DATE: 08-18-2008
DRAWN BY: M.A.N.
SCALE: AS SHOWN
CHECKED BY: J.P.
DRAWING CODE:
REVIEWED BY: S.T.
SOLICITATION NUMBER: W912P6-08-B-0003

U.S. ARMY ENGINEER DISTRICT
CORPS OF ENGINEERS
CHICAGO, ILLINOIS

DES PLAINES RIVER, ILLINOIS
LOCAL FLOOD PROTECTION
FLOODWALL 37
RIVER RD/ MILWAUKEE AVE.
STATION 277+60.70 TO
STATION 282+49.08

SHEET REFERENCE NUMBER:
S-04J
SHEET 82 OF 131

PLOT DATE: 8/18/2008
FILENAME: Wall-New S-04J.dgn

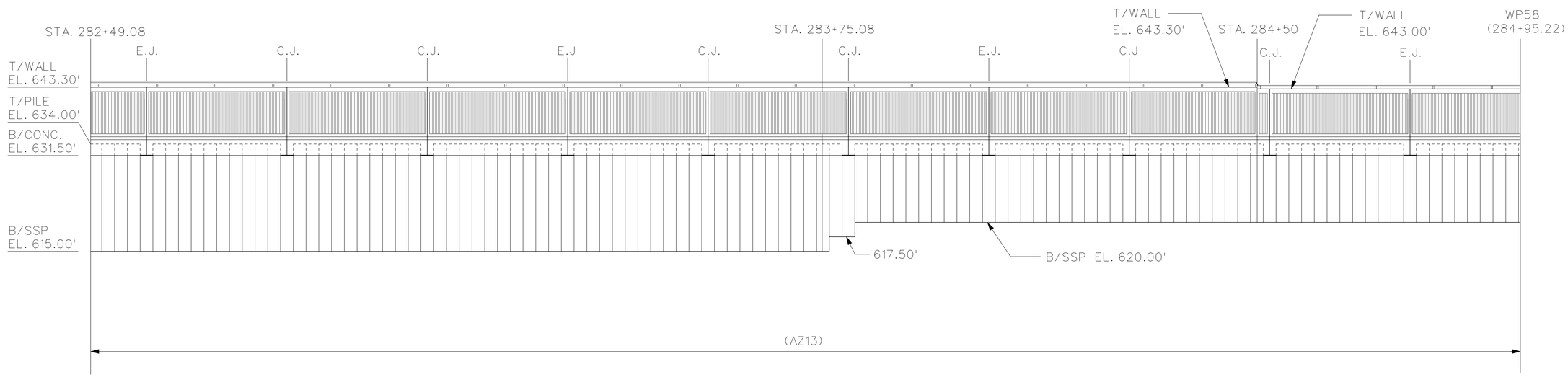

FLOODWALL ELEVATIONS (RIVERSIDE)

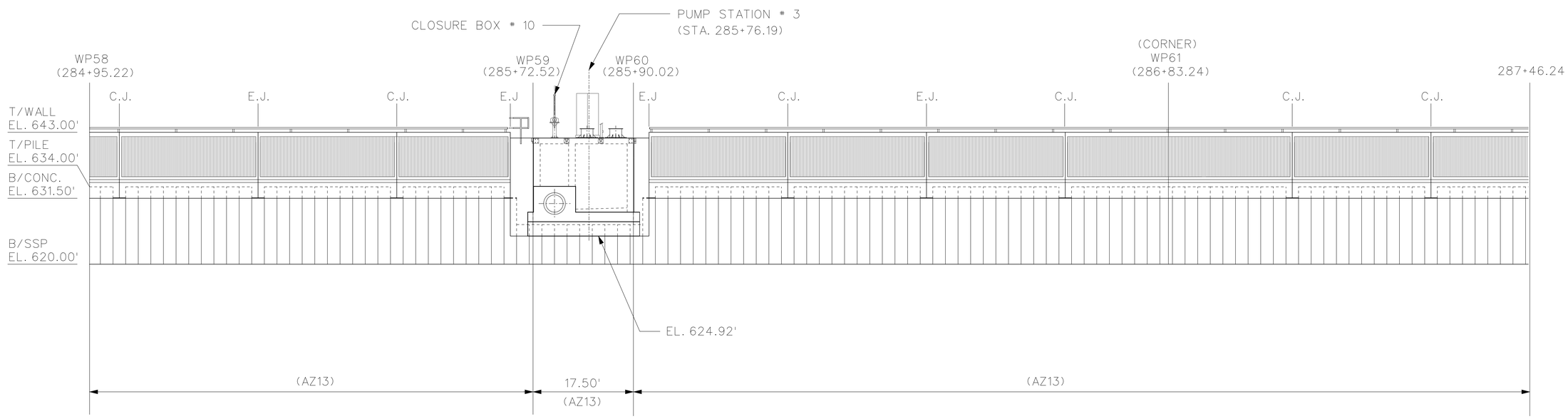

FLOODWALL ELEVATIONS (RIVERSIDE)

8 6 4 2 0 8 16FT

SCALE: 1/8"=1'-0"

US Army Corps of Engineers
Chicago District

SYMBOL	AMENDMENT DESCRIPTION	DATE APPROVED	SYMBOL	DESCRIPTION	DATE APPROVED

DESIGNED BY: D.W.F.
DATE: 08-18-2008
DRAWN BY: M.A.N.
SCALE: AS SHOWN
CHECKED BY: J.P.
DRAWING CODE:
REVIEWED BY: S.T.
SOLICITATION NUMBER: W912P6-08-B-0003

U.S. ARMY ENGINEER DISTRICT
CORPS OF ENGINEERS
CHICAGO, ILLINOIS

DES PLAINES RIVER, ILLINOIS
LOCAL FLOOD PROTECTION
FLOODWALL 37
RIVER RD/ MILWAUKEE AVE.
STATION 282+49.08 TO
STATION 287+46.24

SHEET REFERENCE NUMBER:
S-04K
SHEET 83 OF 131

PLOT DATE: 8/18/2008
FILENAME: Wall-New S-04K.dgn

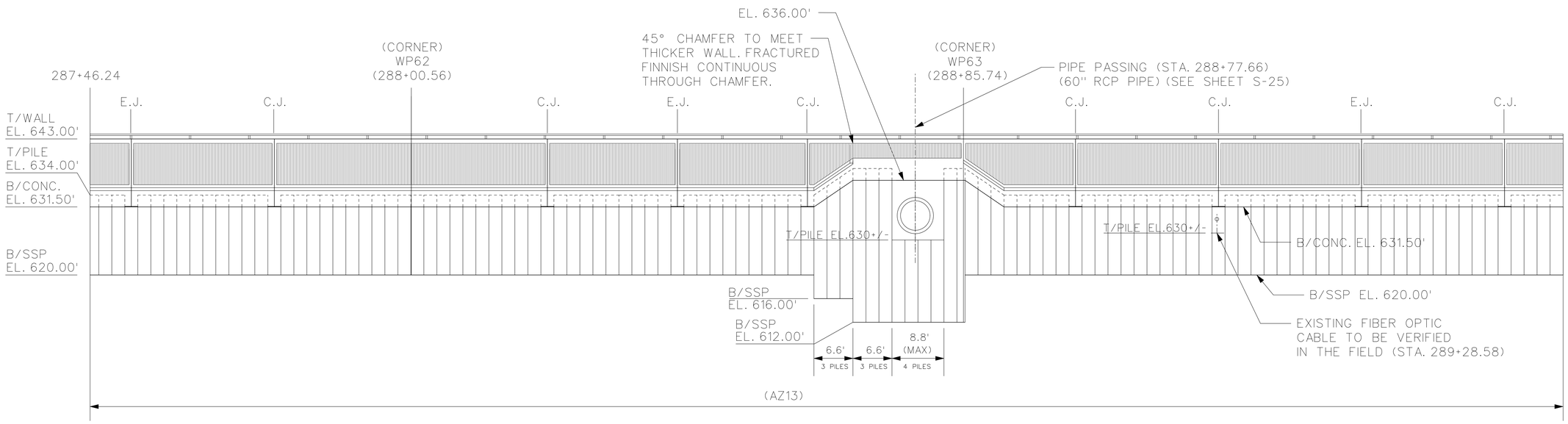

FLOODWALL ELEVATIONS (RIVERSIDE)

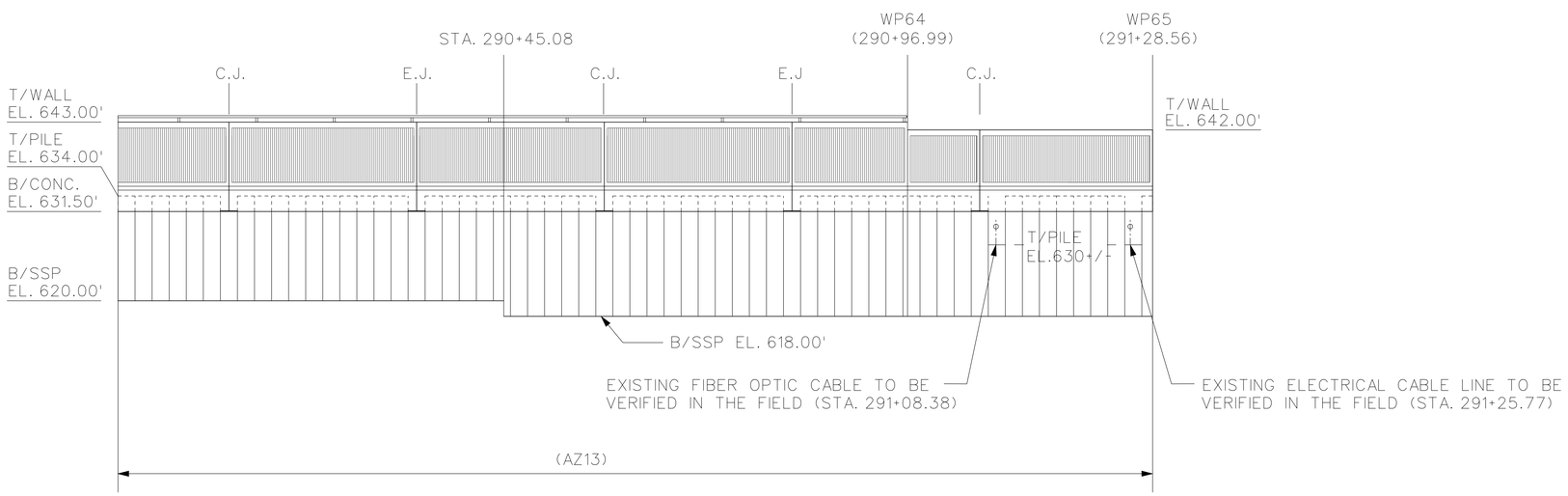

FLOODWALL ELEVATIONS (RIVERSIDE)

8 6 4 2 0 8 16FT

SCALE: 1/8"=1'-0"

US Army Corps of Engineers Chicago District

SYMBOL	AMENDMENT DESCRIPTION	DATE APPROVED	SYMBOL	DESCRIPTION	DATE APPROVED

DESIGNED BY: D.W.F. | DATE: 08-18-2008
DRAWN BY: M.A.N. | SCALE: AS SHOWN
CHECKED BY: J.P. | DRAWING CODE:
REVIEWED BY: S.T. | SOLICITATION NUMBER: W912P6-08-B-0003

U.S. ARMY ENGINEER DISTRICT CORPS OF ENGINEERS CHICAGO, ILLINOIS

DES PLAINES RIVER, ILLINOIS
LOCAL FLOOD PROTECTION
FLOODWALL 37
RIVER RD/ MILWAUKEE AVE.
STATION 287+46.24 TO
STATION 291+28.56

SHEET REFERENCE NUMBER:
S-04L
SHEET 84 OF 131

PLOT DATE: 8/18/2008
FILENAME: Wall-New S-04L.dgn

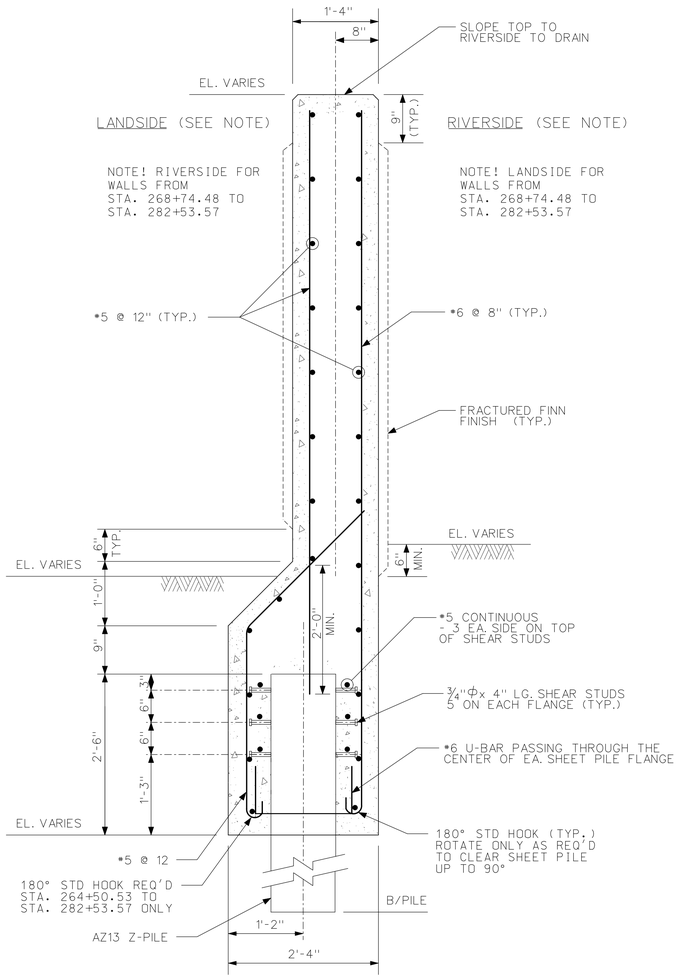

TYPICAL AZ13 I-WALL SECTION

SCALE: 1" = 1'-0"

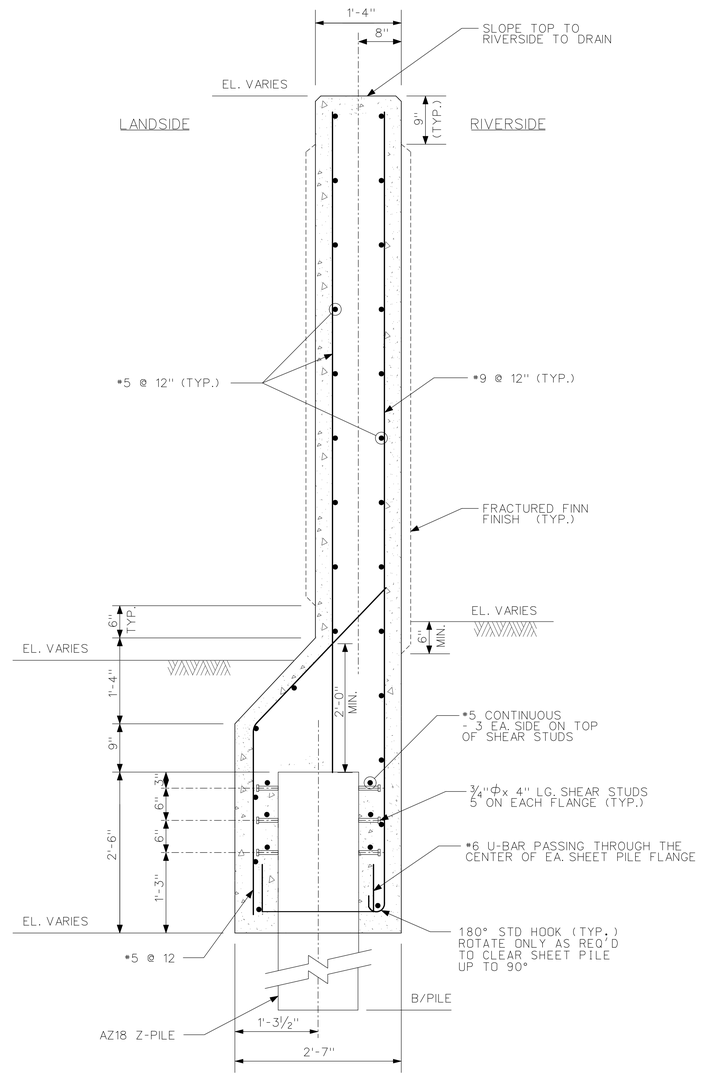

TYPICAL AZ18 I-WALL SECTION

SCALE: 1" = 1'-0"

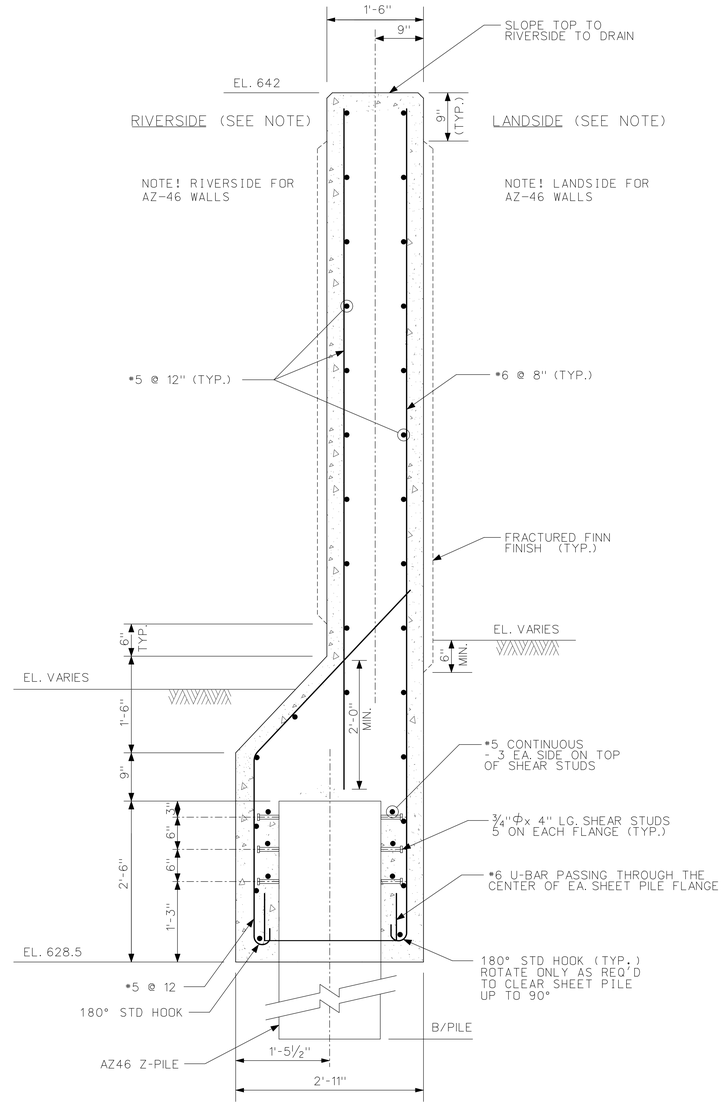

TYPICAL AZ46 I-WALL SECTION

SCALE: 1" = 1'-0"

SCALE: 1" = 1'-0"

US Army Corps of Engineers
Chicago District

SYMBOL	AMENDMENT DESCRIPTION	DATE APPROVED	SYMBOL	DESCRIPTION	DATE APPROVED

DESIGNED BY: L.T., J.P.
DATE: JULY 2008
DRAWN BY: M.N., D.S.
SCALE: AS SHOWN
CHECKED BY: J.P.
DRAWING CODE: DESP37-S01.DGN
REVIEWED BY: S.T.
SOLICITATION NUMBER: W912P6-08-B-0003

U.S. ARMY ENGINEER DISTRICT
CORPS OF ENGINEERS
CHICAGO, ILLINOIS

DES PLAINES RIVER, ILLINOIS
LOCAL FLOOD PROTECTION
FLOODWALL 37
RIVER RD/MILWAUKEE AVE.
SHEET PILE I-WALLS
TYPICAL SECTIONS

SHEET REFERENCE NUMBER:
S-05
SHEET 85 OF 131

PLOT DATE: 8/18/2008
FILENAME: Desp37-S05.dgn

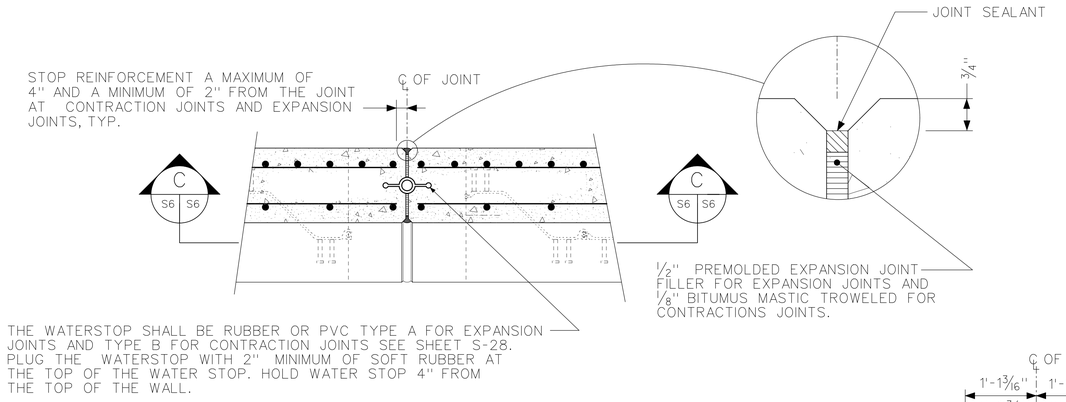

SECTION A
SCALE 1"=1'-0"

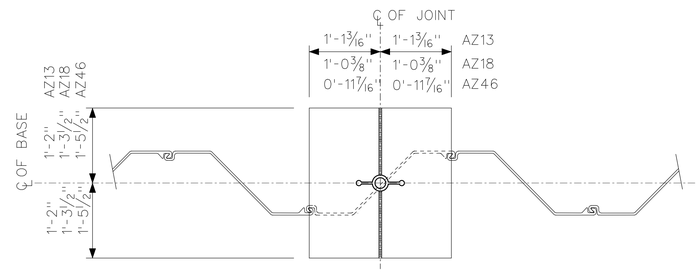

SECTION B
SCALE 1" = 1'-0"

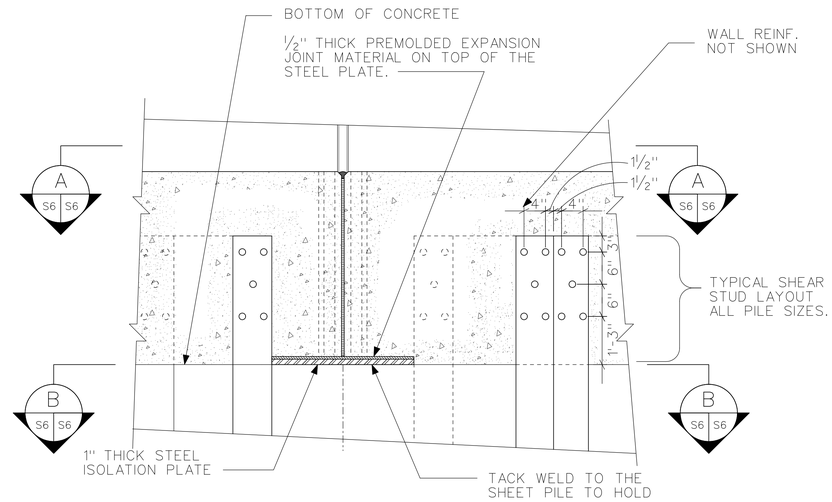

SECTION C
SCALE 1"=1'-0"

TYPICAL EXPANSION/CONTRACTION JOINT DETAILS

12 6 0 1 2 3 4 5
SCALE: 1" = 1'-0"

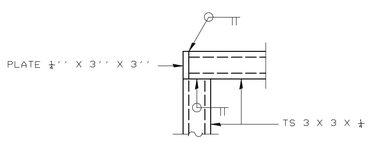

DETAIL A
N.T.S.

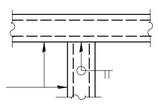

DETAIL B
N.T.S.

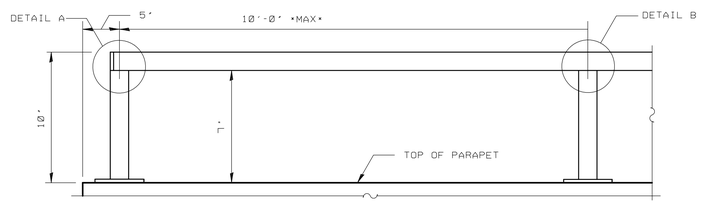

RAILING ELEVATION
N.T.S.

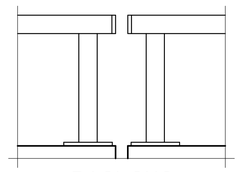

RAILING
ELEVATION AT EXPANSION JOINT
N.T.S.

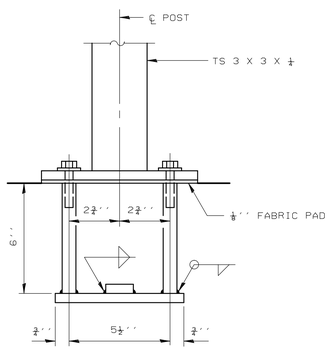

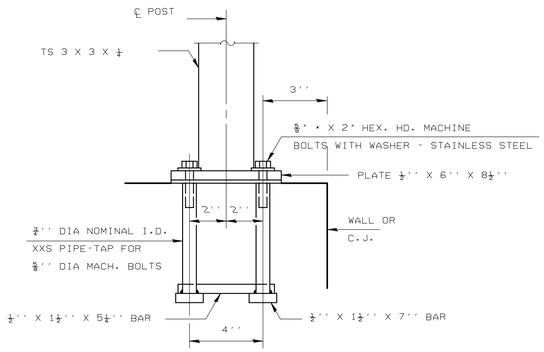

ANCHOR BOLT DETAILS
N.T.S.

IN LIEU OF THE CAST-IN-PLACE ANCHOR DEVICE SHOWN, THE CONTRACTOR HAS THE OPTION OF DRILLING AND SETTING 5/8"DIA ASTM A276, TYPE 316 ADHESIVE OR NON SHRINK CEMENTITIOUS GROUTED ANCHOR BOLTS. EMBEDMENT SHALL BE ACCORDING TO THE MANUFACTURER'S SPECIFICATIONS, AND SHALL DEVELOP FULL STRENGTH OF THE ANCHOR.

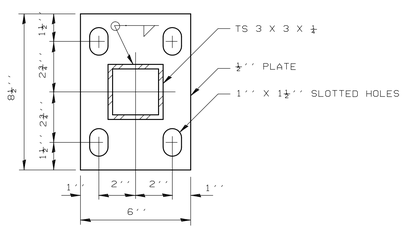

BASE PLATE
N.T.S.

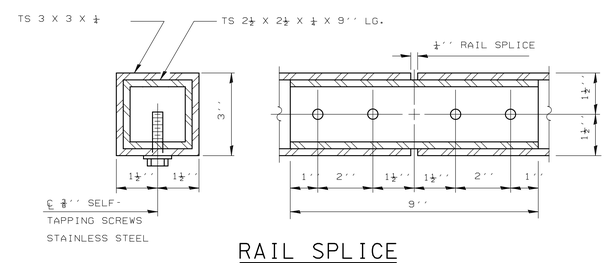

RAIL SPLICE
N.T.S.

NOTES:

1. ALL STEEL RAIL ELEMENTS SHALL BE GALVANIZED IAW. THE SPECIFICATIONS.
2. ALL TUBING SHALL BE ASTM A500 GRADE B.

US Army Corps of Engineers
Chicago District

SYMBOL	AMENDMENT DESCRIPTION	DATE APPROVED	SYMBOL	DESCRIPTION	DATE APPROVED

DESIGNED BY: L.T., J.P. | DATE: 08-18-2008
DRAWN BY: M.N., D.S. | SCALE: AS SHOWN
CHECKED BY: J.P. | DRAWING CODE: DESP37-S01.DGN
REVIEWED BY: S.T. | SOLICITATION NUMBER: W912P6-08-B-0003

U.S. ARMY ENGINEER DISTRICT
CORPS OF ENGINEERS
CHICAGO, ILLINOIS

DES PLAINES RIVER, ILLINOIS
LOCAL FLOOD PROTECTION
FLOODWALL 37
RIVER RD/MILWAUKEE AVE.
SHEET PILE I-WALLS
TYPICAL SECTIONS AND
FLOODWALL HANDRAIL DETAILS

SHEET REFERENCE NUMBER:
S-06
SHEET 86 OF 131

PLOT DATE: 8/18/2008
FILENAME: Desp37-S06.dgn

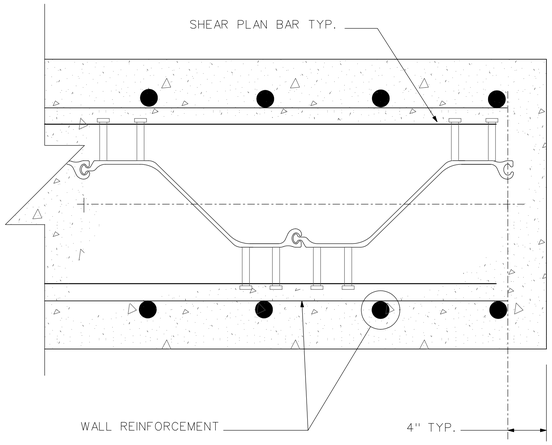

TYPICAL I-WALL END DETAIL - SECTION AT STEEL SHEET PILE

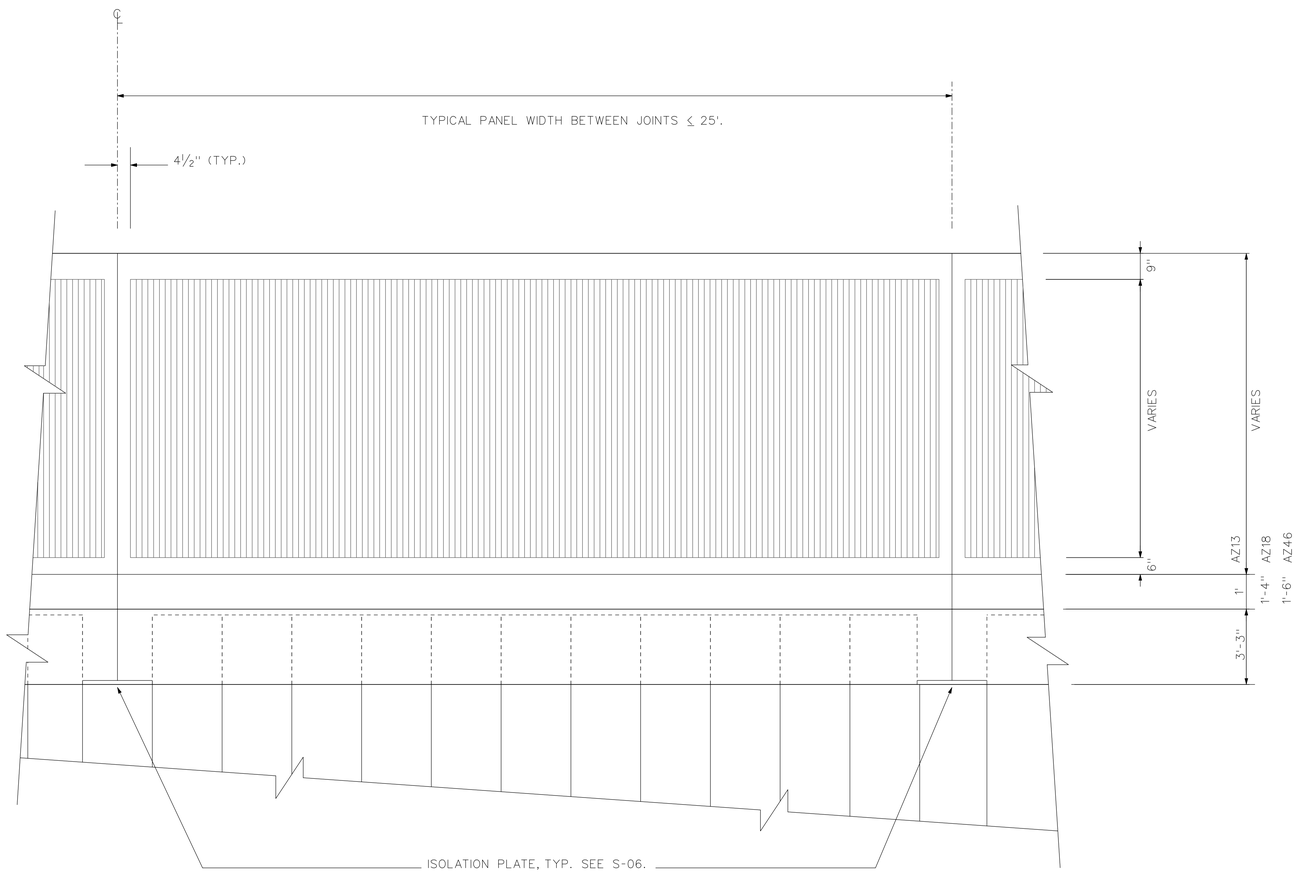

TYPICAL WALL PANEL ELEVATION (CHAMFERED SIDE OF WALL)

NTS

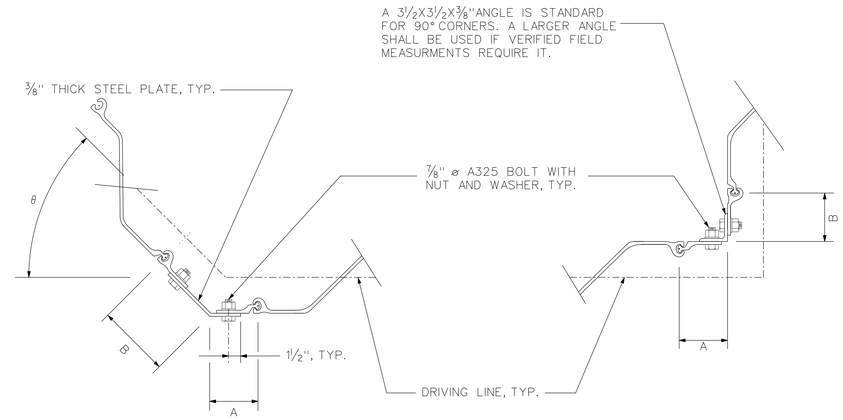

TYPICAL BENT CORNER

TYPICAL 90° CORNER

CONNECTION NOTES:

1. FIELD VERIFY ALL DIMENSIONS PRIOR TO FABRICATION.
2. THE STANDARD A AND B DIMENSION IS 6 INCHES. BOTH DIMENSIONS CAN VARY BASED ON FIELD VERIFIED DIMENSIONS WITH A MAXIMUM LENGTH OF 12 INCHES. THE A AND B DIMENSION FOR THE BENT CORNER SHALL BE DETERMINED FROM THE FIELD VERIFIED DIMENSIONS.
3. ALL FASTERNERS ARE ⅞"ϕ A325 BOLTS WITH NUTS AND WASHERS SPACED AT 6 INCH ON CENTERS THROUGHOUT THE LENGTH OF THE SECTION, EXCEPT FOR 2 FEET AT EACH END WHERE THEY ARE LOCATED ON 3 INCH CENTERS.
4. SEE THE CIVIL PLAN AND PROFILE SHEETS FOR FLOOD WALL BEND COORDINATES TO CALCULATE THE BEND ANGLE θ.

TYPICAL FABRICATED SHEET PILE CORNER DETAILS

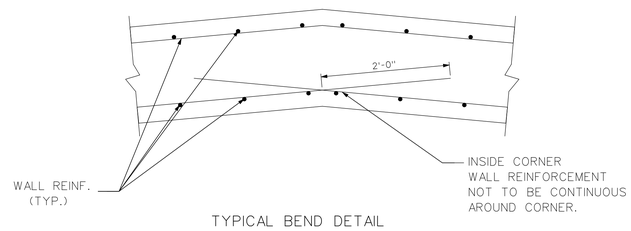

TYPICAL BEND DETAIL

SCALE: 1"=1'

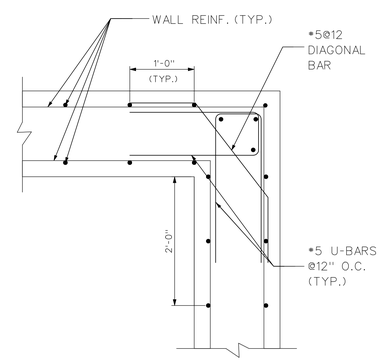

TYPICAL CORNER DETAIL

SCALE: 1"=1'

US Army Corps of Engineers Chicago District

SYMBOL	AMENDMENT DESCRIPTION	DATE APPROVED	SYMBOL	DESCRIPTION	DATE APPROVED

DESIGNED BY: L.T., J.P.
DATE: 08-18-2008
DRAWN BY: M.N., D.S.
SCALE: AS SHOWN
CHECKED BY: J.P.
DRAWING CODE:
REVIEWED BY: S.T.
SOLICITATION NUMBER: W912P6-08-B-0003

U.S. ARMY ENGINEER DISTRICT
CORPS OF ENGINEERS
CHICAGO, ILLINOIS

DES PLAINES RIVER, ILLINOIS
LOCAL FLOOD PROTECTION
FLOODWALL 37
RIVER RD/MILWAUKEE AVE.

DETAILS

SHEET REFERENCE NUMBER:

S-07

SHEET 87 OF 131

PLOT DATE: 8/18/2008
FILENAME: Desp37-S07.dgn

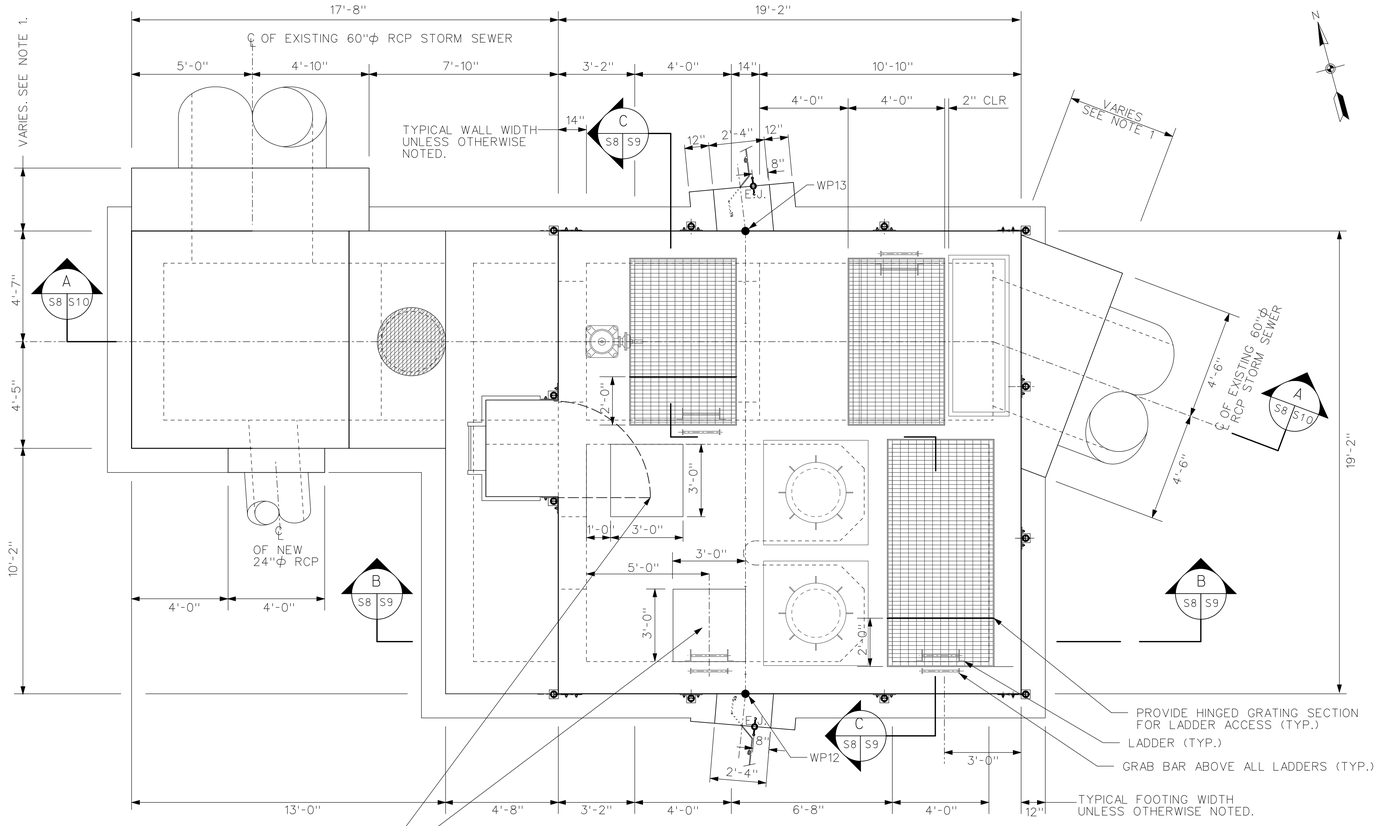

PLAN

SCALE: 3/8" = 1'-0"

NOTES:

1. REMOVE THE EXISTING PIPE BACK TO THE FIRST JOINT AFTER THE BREAK. THEN BUILDOUT THE PIPE STUB TO MEET THE JOINT.

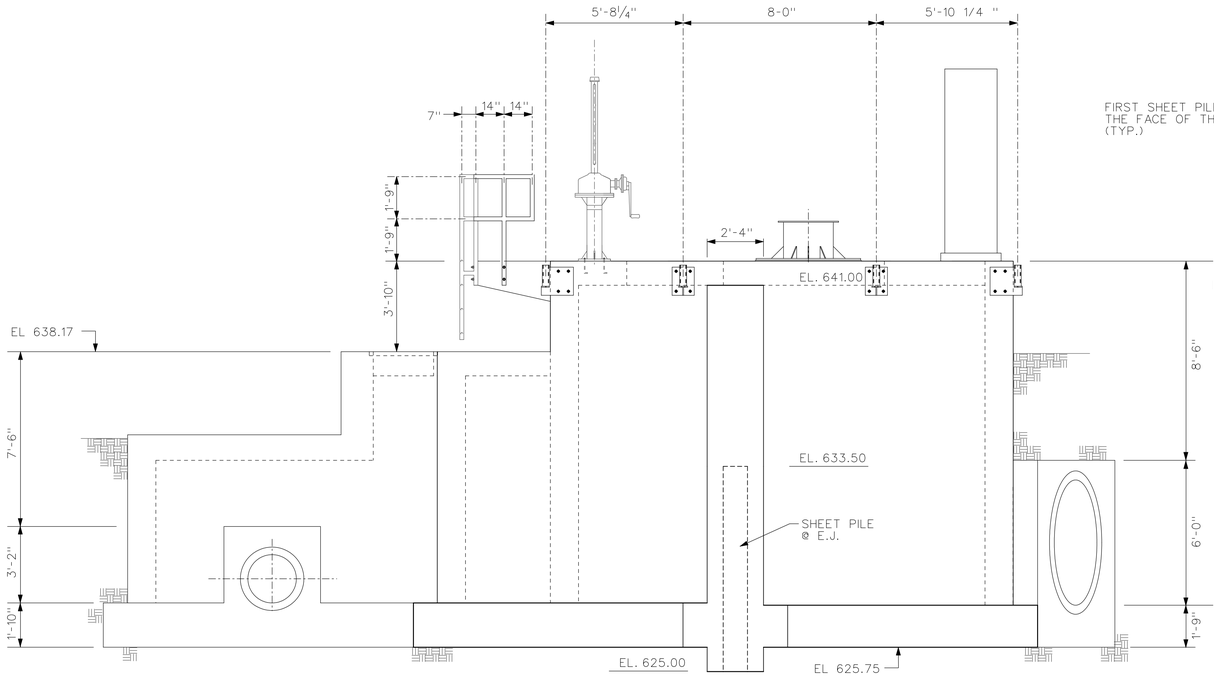

SOUTH ELEVATION

SCALE: 3/8" = 1'-0"

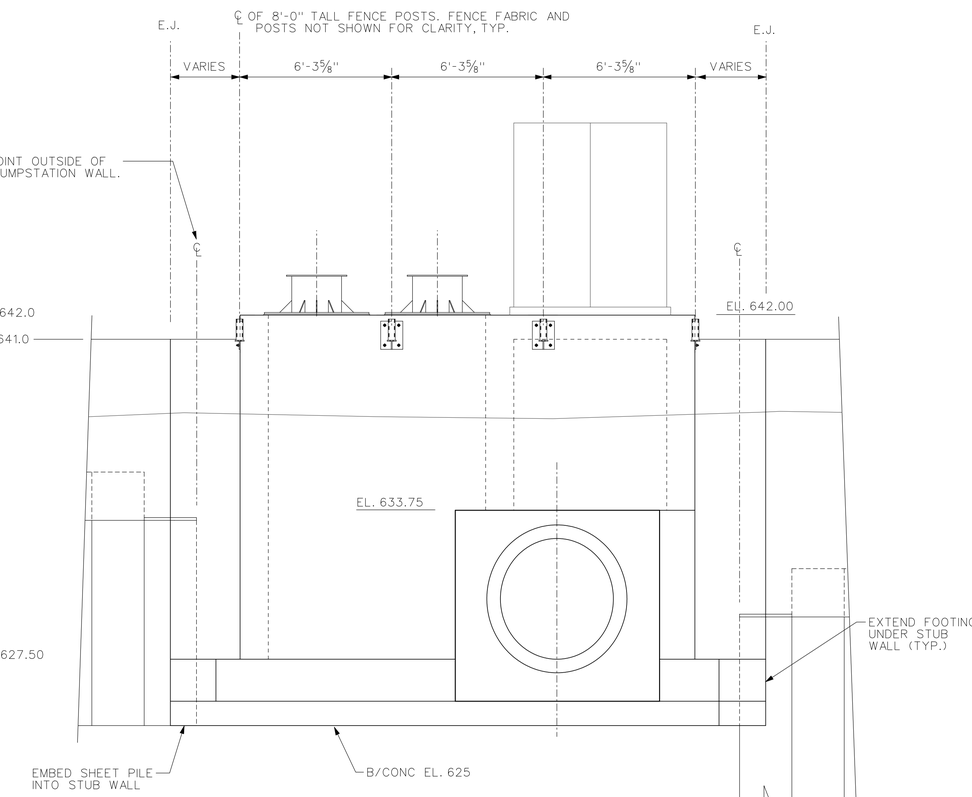

EAST ELEVATION

SCALE: 3/8" = 1'-0"

SCALE: 3/8" = 1'-0"

US Army Corps of Engineers
Chicago District

SYMBOL	AMENDMENT DESCRIPTION	DATE APPROVED	SYMBOL	DESCRIPTION	DATE APPROVED

DESIGNED BY: L.T., J.P. | DATE: 08-18-2008
DRAWN BY: M.N., D.S. | SCALE: AS SHOWN
CHECKED BY: J.P. | DRAWING CODE: DESP37-S08.DGN
REVIEWED BY: S.T. | SOLICITATION NUMBER: W912P6-08-B-0003
FILENAME.DGN

U.S. ARMY ENGINEER DISTRICT
CORPS OF ENGINEERS
CHICAGO, ILLINOIS

DES PLAINES RIVER, ILLINOIS
LOCAL FLOOD PROTECTION
FLOODWALL 37
RIVER RD/MILWAUKEE AVE.
PUMP STATION #1 AND CLOSURE #1
PLAN AND ELEVATIONS

SHEET REFERENCE NUMBER:
S-08
SHEET 88 OF 131

PLOT DATE: 8/18/2008
FILENAME: Desp37-S08.dgn

NOTES:

1. ALL REINFORCING CLEAR COVER SHALL BE 2" TYP ON MEMBERS 12" THICK OR LESS AND SHALL BE 3" TYP ON MEMBERS GREATER THAN 12" THICK UNLESS OTHERWISE NOTED.

2. ALL REINFORCEMENT SHALL BE #5 @12" UNLESS OTHEREWISE SHOWN.

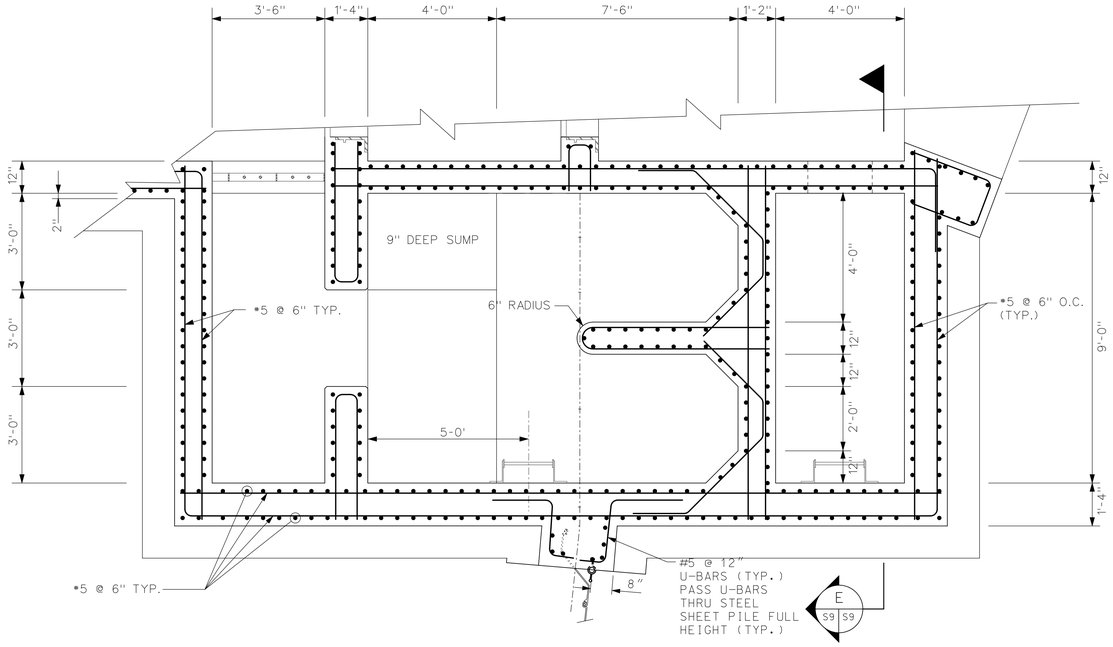

SECTION D
SCALE: 1/2" = 1'-0"

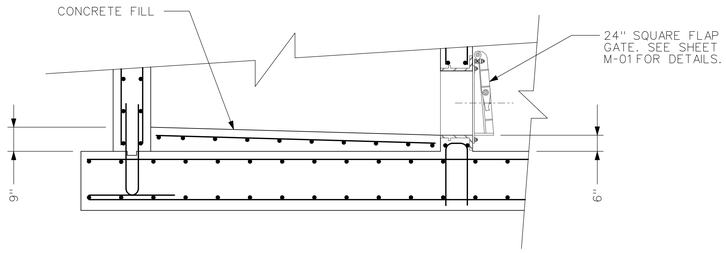

SECTION E
SCALE: 1/2" = 1'-0"

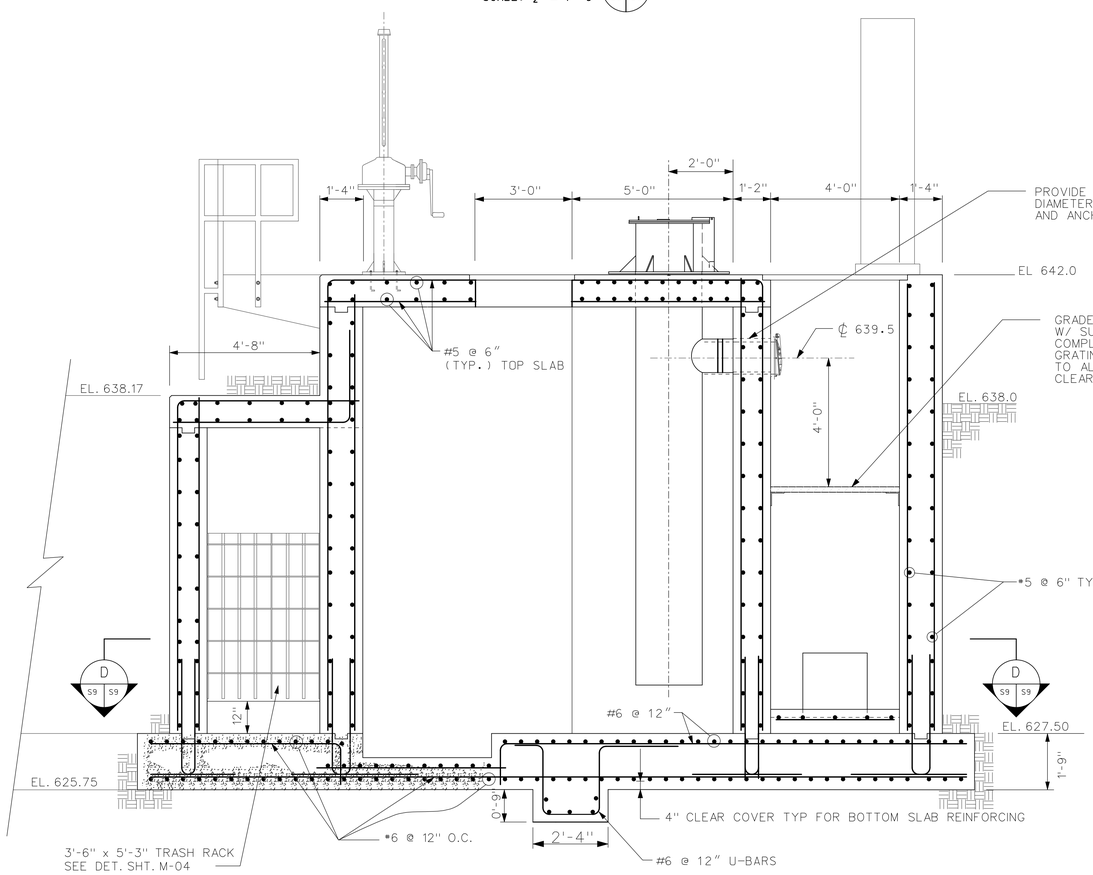

SECTION B
SCALE: 1/2" = 1'-0"

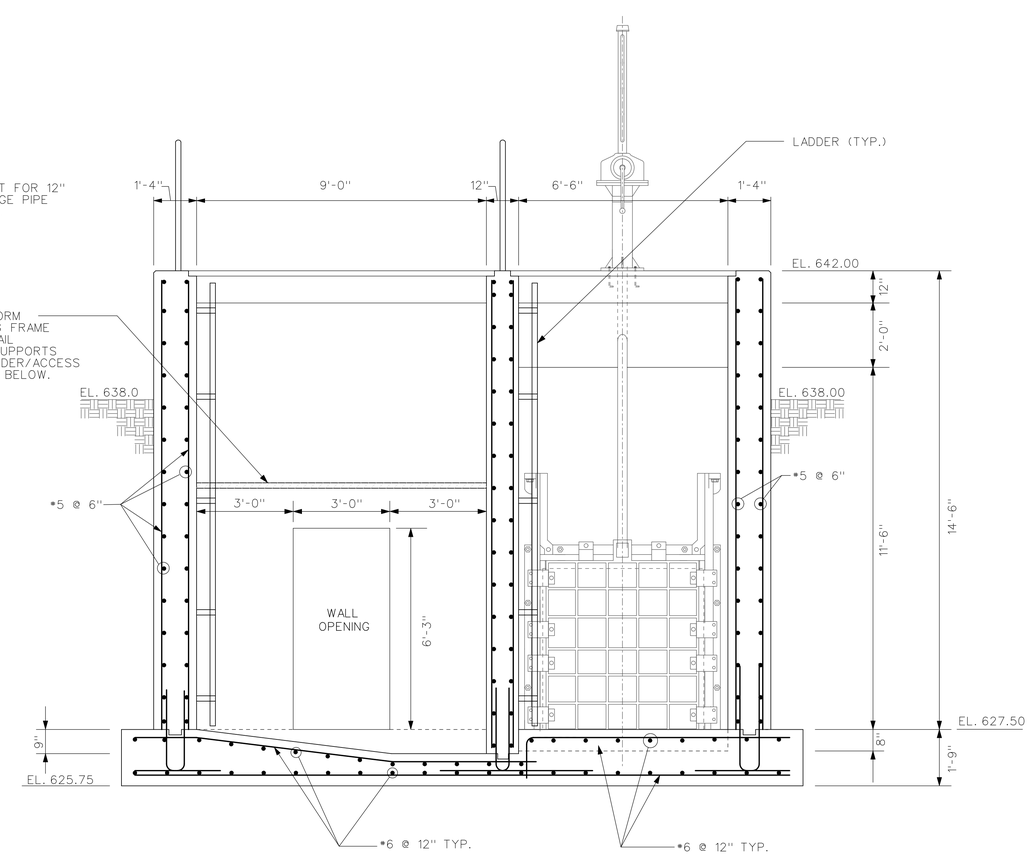

SECTION C
SCALE: 1/2" = 1'-0"

SCALE: 1/2" = 1'-0"

US Army Corps of Engineers
Chicago District

SYMBOL	AMENDMENT DESCRIPTION	DATE APPROVED	SYMBOL	DESCRIPTION	DATE APPROVED

DESIGNED BY: L.T., J.P.
DATE: 08-18-2008
DRAWN BY: M.N., D.S.
SCALE: AS SHOWN
CHECKED BY: J.P.
DRAWING CODE:
REVIEWED BY: S.T.
SOLICITATION NUMBER: W912P6-08-B-0003

U.S. ARMY ENGINEER DISTRICT
CORPS OF ENGINEERS
CHICAGO, ILLINOIS

DES PLAINES RIVER, ILLINOIS
LOCAL FLOOD PROTECTION
FLOODWALL 37
RIVER RD/MILWAUKEE AVE.
PUMP STATION #1 AND CLOSURE #1
SECTIONS SHEET 1

SHEET REFERENCE NUMBER:
S-09
SHEET 89 OF 131

PLOT DATE: 8/18/2008
FILENAME: Deep37-S09.dgn

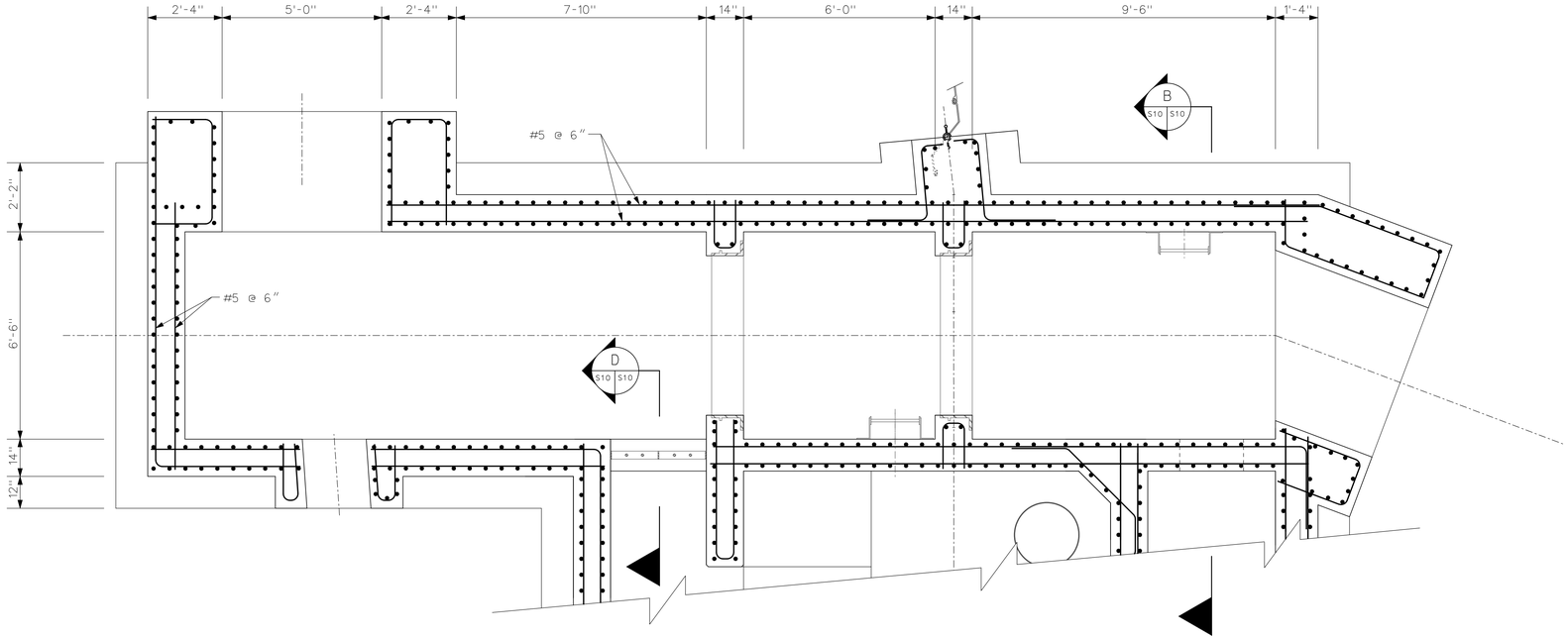

SECTION C
SCALE: 1/2" = 1'-0"

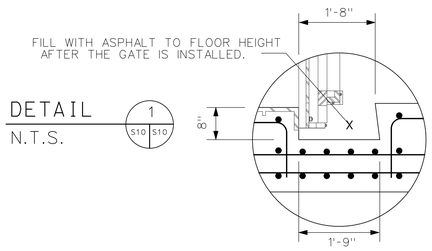

DETAIL 1
N.T.S.

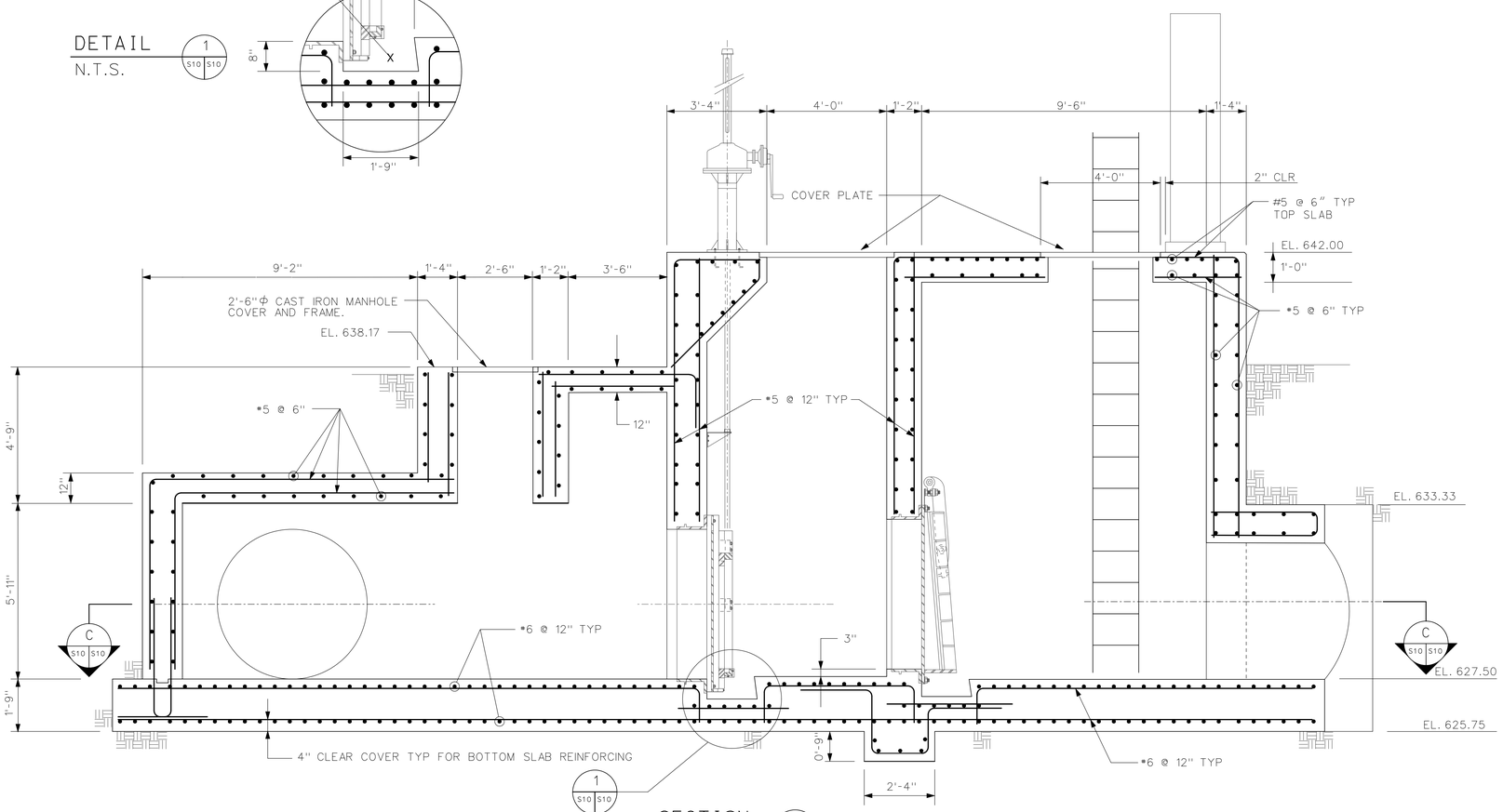

SECTION A
SCALE: 1/2" = 1'-0"

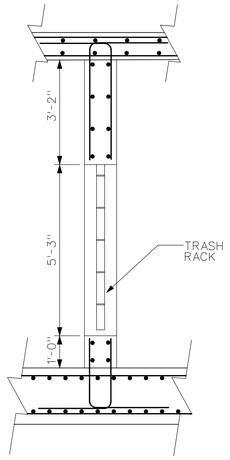

SECTION D
SCALE: 1/2" = 1'-0"

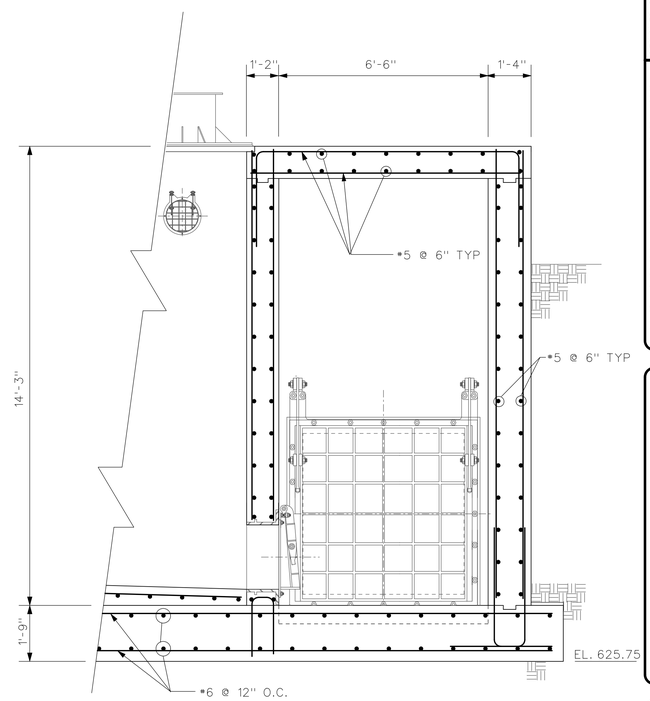

SECTION B
SCALE: 1/2" = 1'-0"

12 0 1 2 3 4 5
SCALE: 1/2" = 1'-0"

NOTES:

1. ALL REINFORCING CLEAR COVER SHALL BE 2" TYP ON MEMBERS 12" THICK OR LESS AND SHALL BE 3" TYP ON MEMBERS GREATER THAN 12" THICK UNLESS OTHERWISE NOTED.
2. ALL REINFORCEMENT SHALL BE #5 @ 12" UNLESS OTHERWISE SHOWN.

US Army Corps of Engineers
Chicago District

SYMBOL	AMENDMENT DESCRIPTION	DATE APPROVED	SYMBOL	DESCRIPTION	DATE APPROVED

DESIGNED BY: L.T., J.P.
DATE: 08-18-2008
DRAWN BY: M.N., D.S.
SCALE: AS SHOWN
CHECKED BY: J.P.
DRAWING CODE: DESP37-S10.DGN
REVIEWED BY: S.T.
SOLICITATION NUMBER: W912P6-08-B-0003

U.S. ARMY ENGINEER DISTRICT
CORPS OF ENGINEERS
CHICAGO, ILLINOIS

DES PLAINES RIVER, ILLINOIS
LOCAL FLOOD PROTECTION
FLOODWALL 37
RIVER RD/MILWAUKEE AVE.
PUMP STATION #1 AND CLOSURE #1
SECTION SHEET 2

SHEET REFERENCE NUMBER:
S-10
SHEET 90 OF 131

PLOT DATE: 8/18/2008
FILENAME: Desp37-S10.dgn

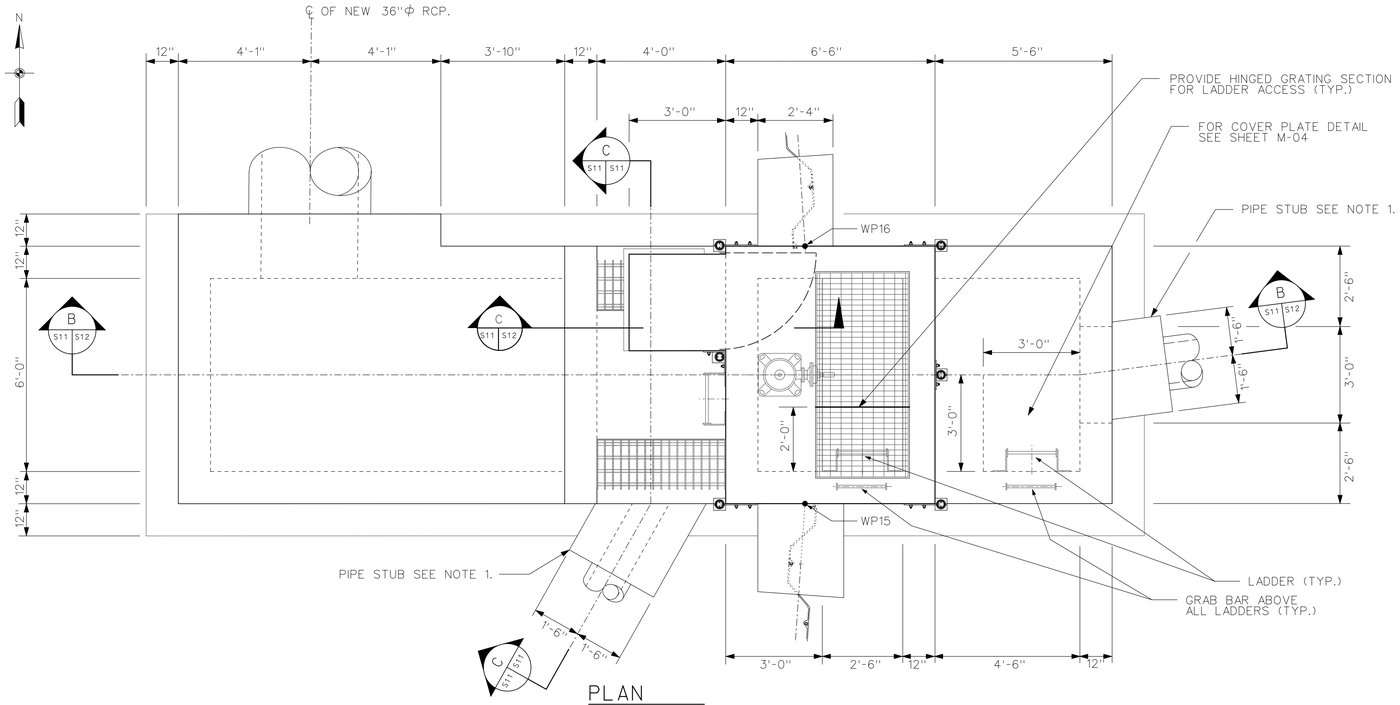

PLAN
SCALE: 1/2" = 1'-0"

NOTES:

1. ALL REINFORCING CLEAR COVER SHALL BE 2" TYP ON MEMBERS 12" THICK OR LESS AND SHALL BE 3" TYP ON MEMBERS GREATER THAN 12" THICK UNLESS OTHERWISE NOTED.
2. ALL REINFORCEMENT SHALL BE #5 @ 12" UNLESS OTHERWISE SHOWN.

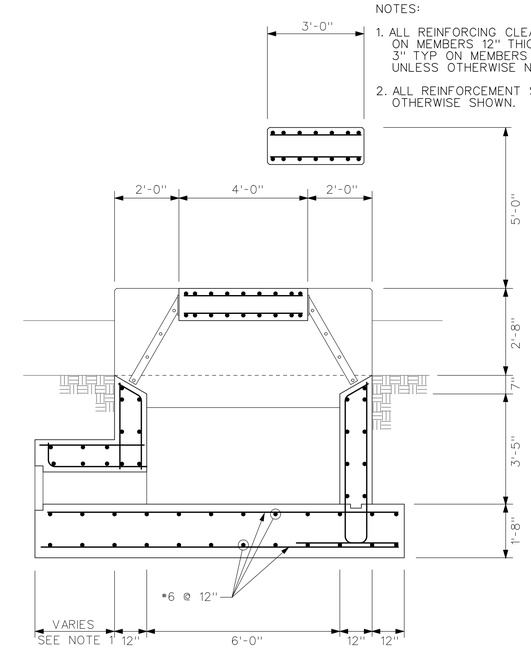

SECTION
SCALE: 1/2" = 1'-0"

NOTES:

1. REMOVE THE EXISTING PIPE BACK TO THE FIRST JOINT AFTER THE BREAK THEN BUILD OUT THE PIPE STUB TO MEET THE JOINT.

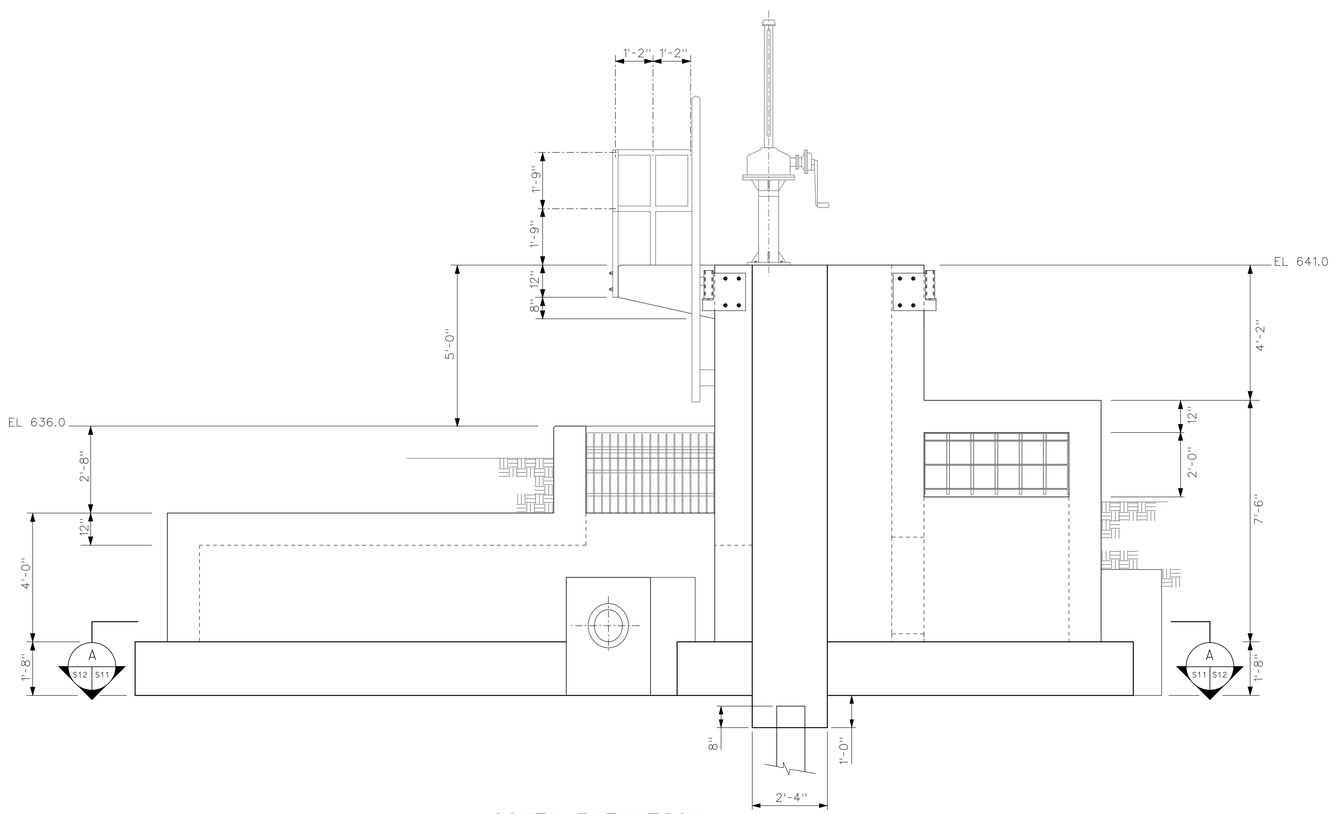

SOUTH ELEVATION
SCALE: 1/2" = 1'-0"

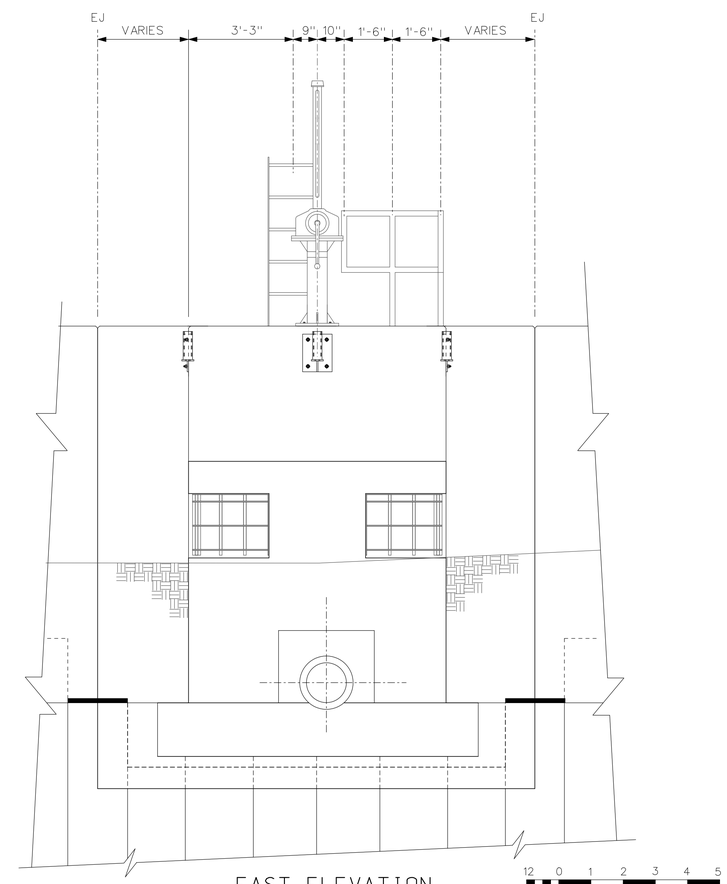

EAST ELEVATION
SCALE: 1/2" = 1'-0"

SCALE: 1/2" = 1'-0"

US Army Corps of Engineers
Chicago District

SYMBOL	AMENDMENT DESCRIPTION	DATE APPROVED	SYMBOL	DESCRIPTION	DATE APPROVED

DESIGNED BY: L.T., J.P.
DATE: 08-18-2008
DRAWN BY: M.N., D.S.
SCALE: AS SHOWN
CHECKED BY: J.P.
DRAWING CODE: DESP37-S11.DGN
REVIEWED BY: S.T.
SOLICITATION NUMBER: W912P6-08-B-0003

U.S. ARMY ENGINEER DISTRICT
CORPS OF ENGINEERS
CHICAGO, ILLINOIS

DES PLAINES RIVER, ILLINOIS
LOCAL FLOOD PROTECTION
FLOODWALL 37
RIVER RD/MILWAUKEE AVE.
CLOSURE #2
PLAN AND ELEVATIONS

SHEET REFERENCE NUMBER:
S-11
SHEET 91 OF 131

PLOT DATE: 8/18/2008
FILENAME: Desp37-S11.dgn

NOTES:

1. ALL REINFORCING CLEAR COVER SHALL BE 2" TYP ON MEMBERS 12" THICK OR LESS AND SHALL BE 3" TYP ON MEMBERS GREATER THAN 12" THICK UNLESS OTHERWISE NOTED.
2. ALL REINFORCEMENT SHALL BE #5 @ 12" UNLESS OTHERWISE SHOWN.

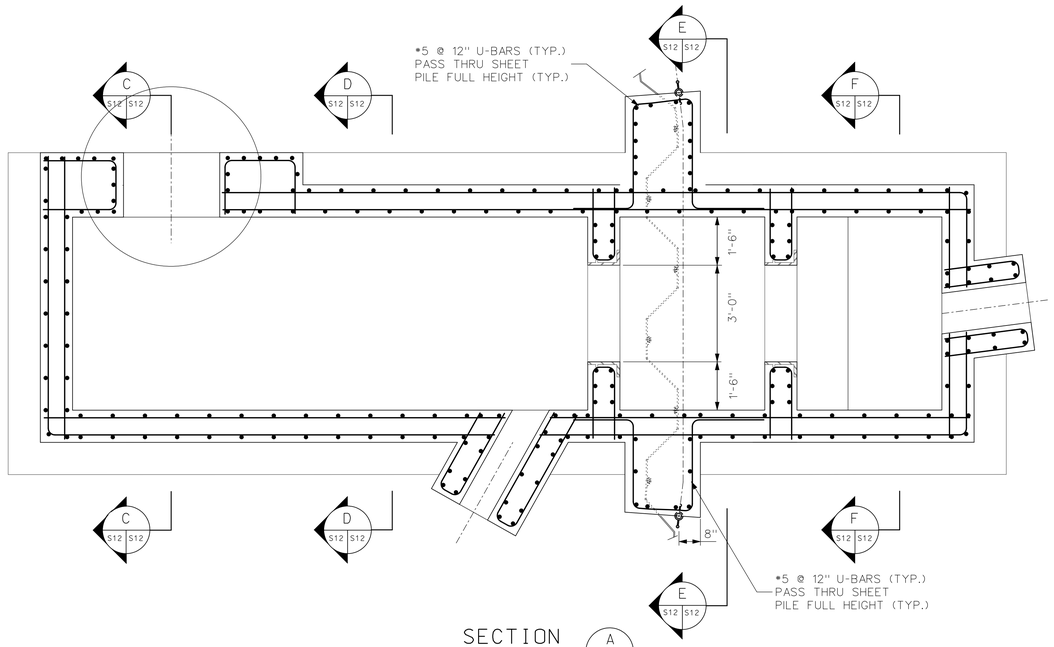

SECTION A
SCALE: 1/2" = 1'-0"

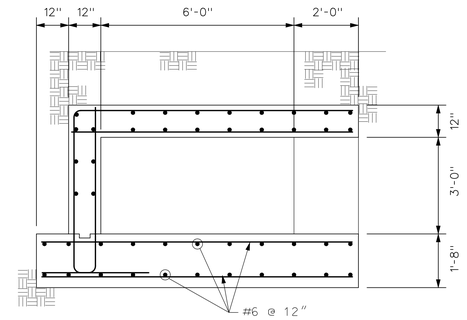

SECTION C
SCALE: 1/2" = 1'-0"

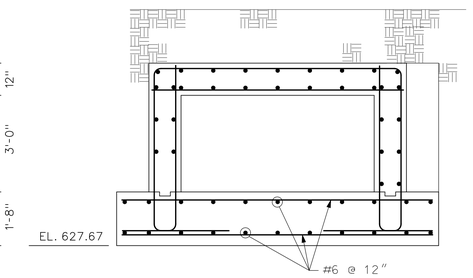

SECTION D
SCALE: 1/2" = 1'-0"

SECTION C
SCALE: 1/2" = 1'-0"

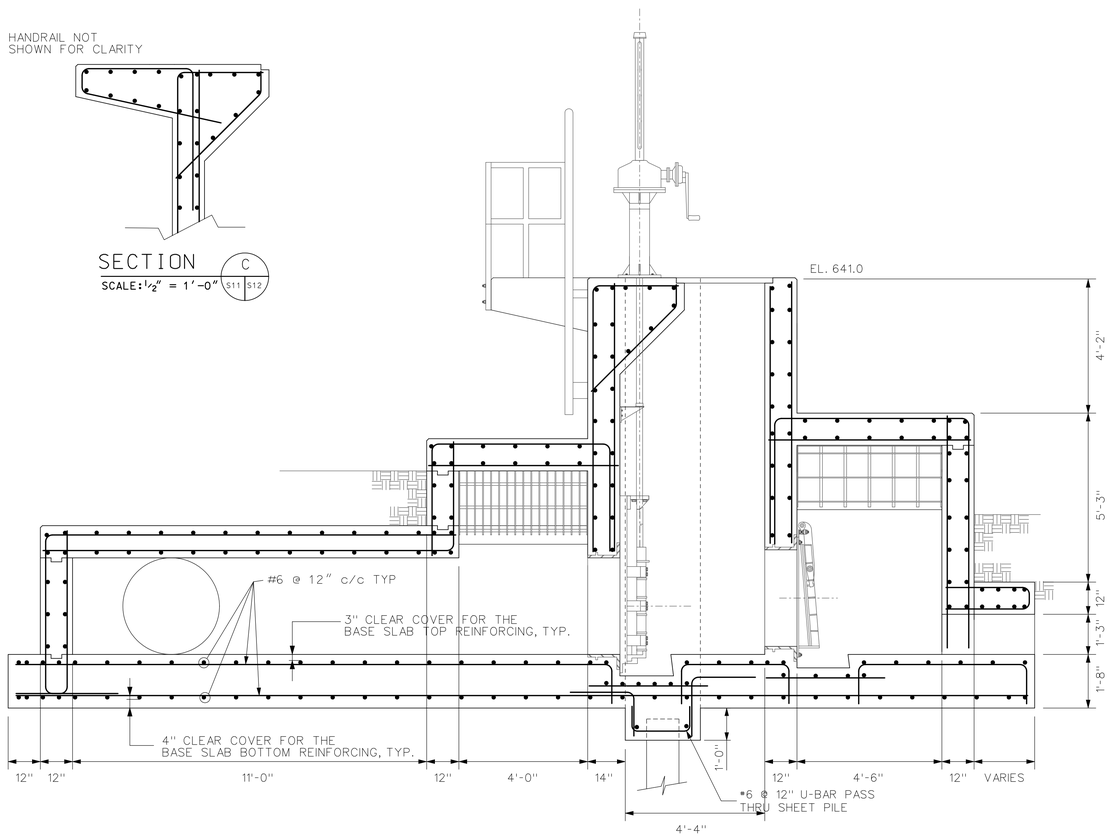

SECTION B
SCALE: 1/2" = 1'-0"

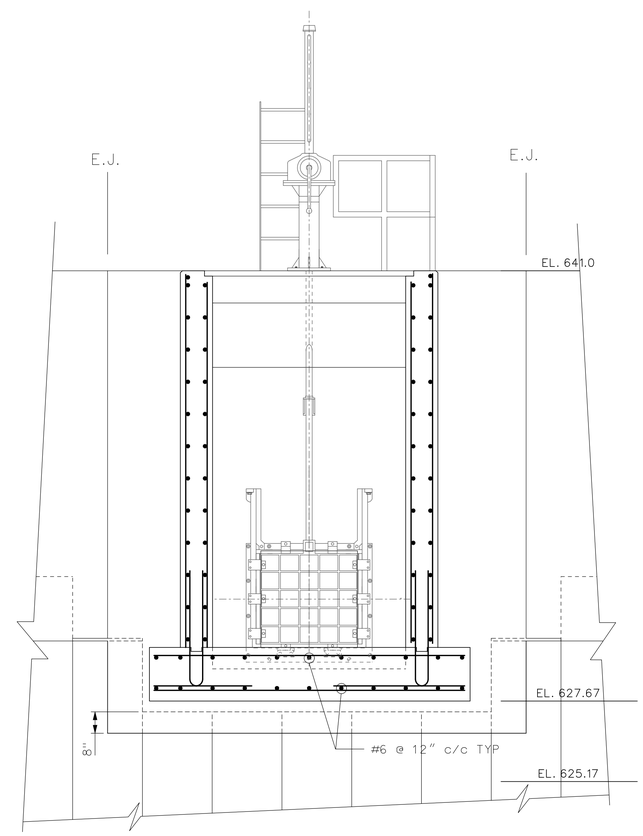

SECTION E
SCALE: 1/2" = 1'-0"

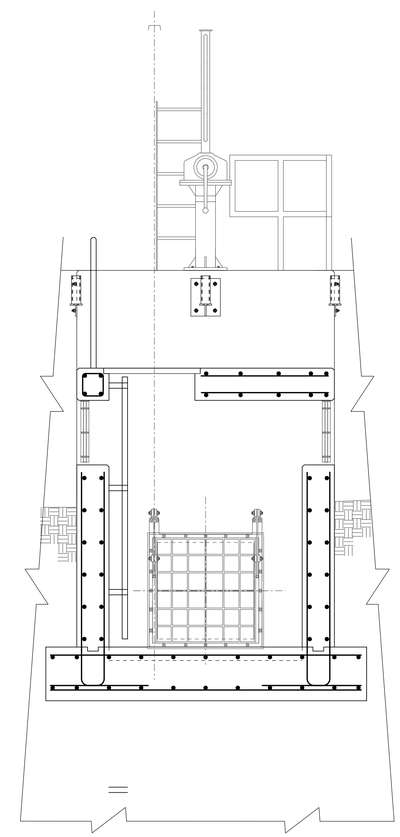

SECTION F
SCALE: 1/2" = 1'-0"

12 0 1 2 3 4 5
SCALE: 1/2" = 1'-0"

US Army Corps of Engineers
Chicago District

SYMBOL	AMENDMENT DESCRIPTION	DATE APPROVED	SYMBOL	DESCRIPTION	DATE APPROVED

DESIGNED BY: L.T., J.P.
DATE: 08-18-2008
DRAWN BY: M.N., D.S.
SCALE: AS SHOWN
CHECKED BY: J.P.
DRAWING CODE: DESP37-S12.DGN
REVIEWED BY: S.T.
SOLICITATION NUMBER: W912P6-08-B-0003

U.S. ARMY ENGINEER DISTRICT
CORPS OF ENGINEERS
CHICAGO, ILLINOIS

DES PLAINES RIVER, ILLINOIS
LOCAL FLOOD PROTECTION
FLOODWALL 37
RIVER RD/MILWAUKEE AVE.
CLOSURE #2
SECTIONS

SHEET REFERENCE NUMBER:
S-12
SHEET 92 OF 131

PLOT DATE: 8/18/2008
FILENAME: Desp37-S12.dgn

NOTES:

1. ALL REINFORCING CLEAR COVER SHALL BE 2" TYP ON MEMBERS 12" THICK OR LESS AND SHALL BE 3" TYP ON MEMBERS GREATER THAN 12" THICK UNLESS OTHERWISE NOTED.
2. ALL REINFORCEMENT SHALL BE #5 @ 12" UNLESS OTHERWISE SHOWN.

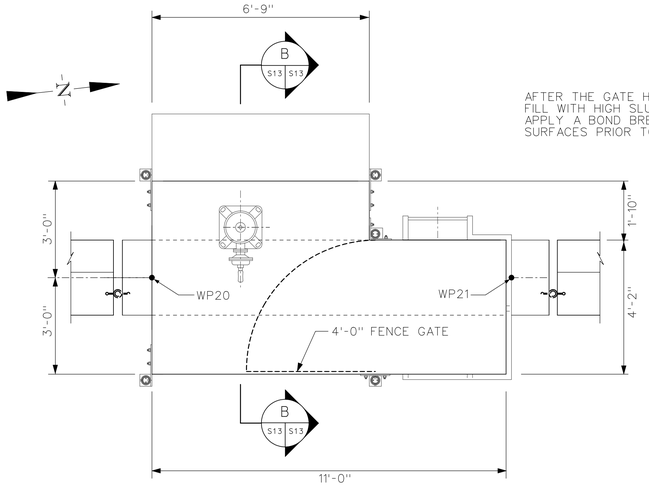

PLAN CLOSURE #3 & #4

SCALE: 1/2" = 1'-0"

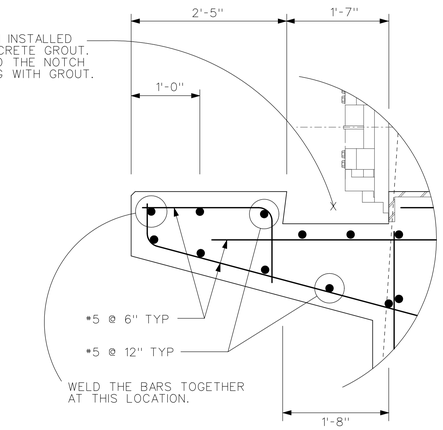

DETAIL 1

NTS

NOTE: SIMILAR FOR CLOSURE #4

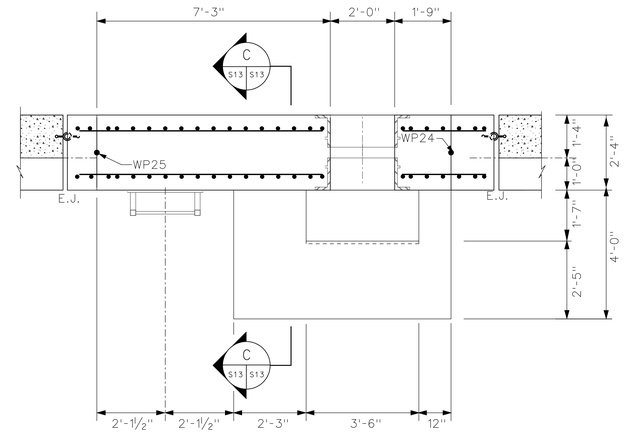

SECTION A

SCALE: 1/2" = 1'-0"

NOTE: SIMILAR FOR CLOSURE #3

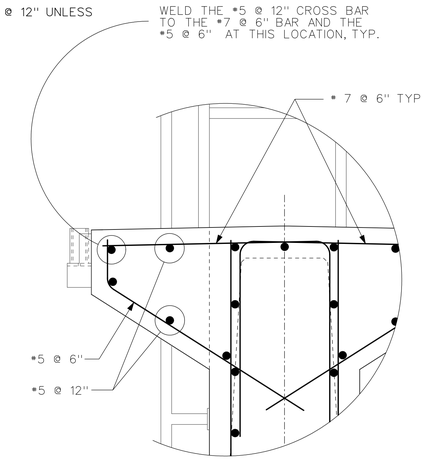

DETAIL 2

NTS

NOTE: SIMILAR FOR CLOSURE #3

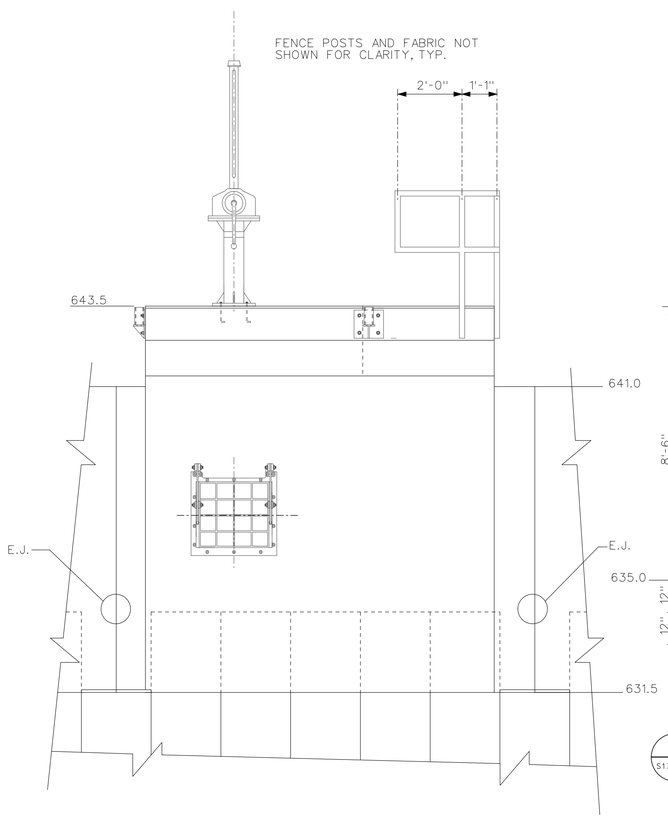

EAST ELEVATION CLOSURE #3

SCALE: 1/2" = 1'-0"

NOTE: SIMILAR FOR CLOSURE #4

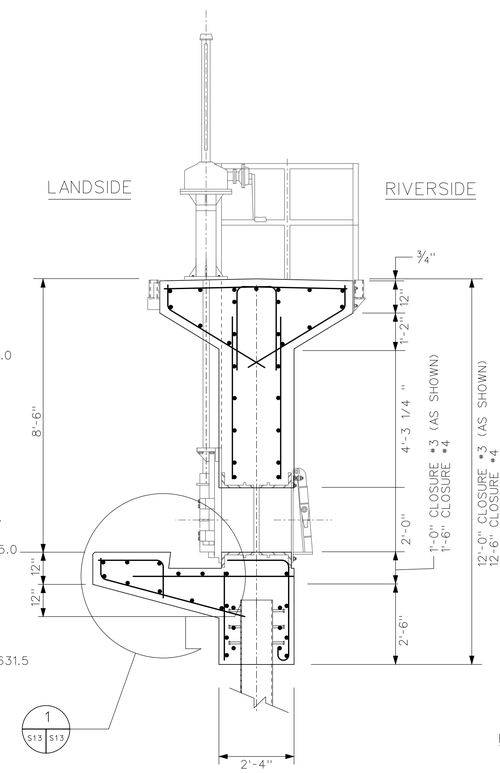

SECTION B

SCALE: 1/2" = 1'-0"

SCALE: 1/2" = 1'-0"

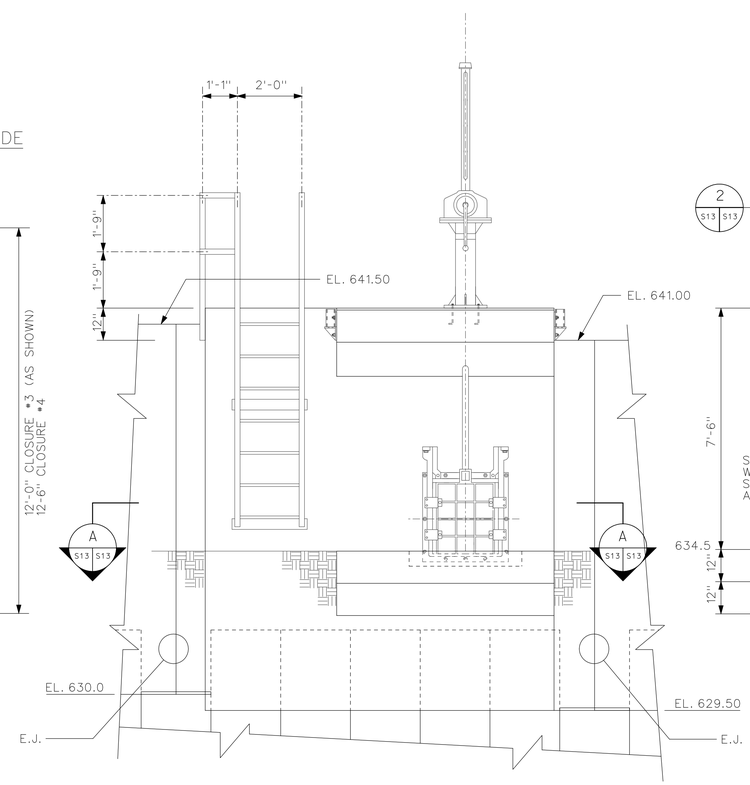

WEST ELEVATION CLOSURE #4

SCALE: 1/2" = 1'-0"

NOTE: SIMILAR FOR CLOSURE #3

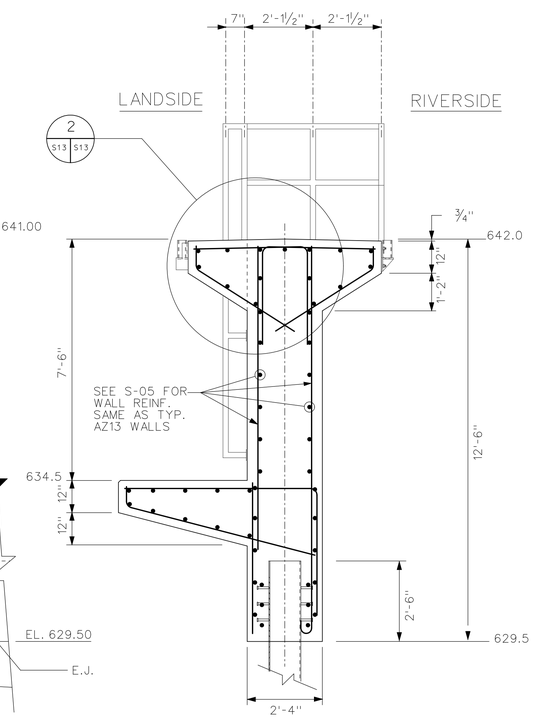

SECTION C

SCALE: 1/2" = 1'-0"

US Army Corps of Engineers
Chicago District

SYMBOL	AMENDMENT DESCRIPTION	DATE APPROVED	SYMBOL	DESCRIPTION	DATE APPROVED

DESIGNED BY: EGS
DATE: JULY 2008
DRAWN BY: EGS
SCALE: AS SHOWN
CHECKED BY: JJS
DRAWING CODE: DESP37-S13.DGN
REVIEWED BY: JJS
SOLICITATION NUMBER: W912P6-08-B-0003

U.S. ARMY ENGINEER DISTRICT
CORPS OF ENGINEERS
CHICAGO, ILLINOIS

DES PLAINES RIVER, ILLINOIS
LOCAL FLOOD PROTECTION
LEVEE 37

CLOSURES #3 AND #4
PLAN, ELEVATIONS AND SECTIONS

SHEET REFERENCE NUMBER:
S-13

PLOT DATE: 8/18/2008
FILENAME: Desp37-S13.dgn

NOTES:

1. ALL REINFORCING CLEAR COVER SHALL BE 2" TYP ON MEMBERS 12" THICK OR LESS AND SHALL BE 3" TYP ON MEMBERS GREATER THAN 12" THICK UNLESS OTHERWISE NOTED.
2. ALL REINFORCEMENT SHALL BE #5 @ 12" UNLESS OTHERWISE SHOWN.
3. CONTRACTOR SHALL PRODUCE TEMPORARY COFFERDAMS AS REQUIRED TO CONSTRUCT ALL STRUCTURES.

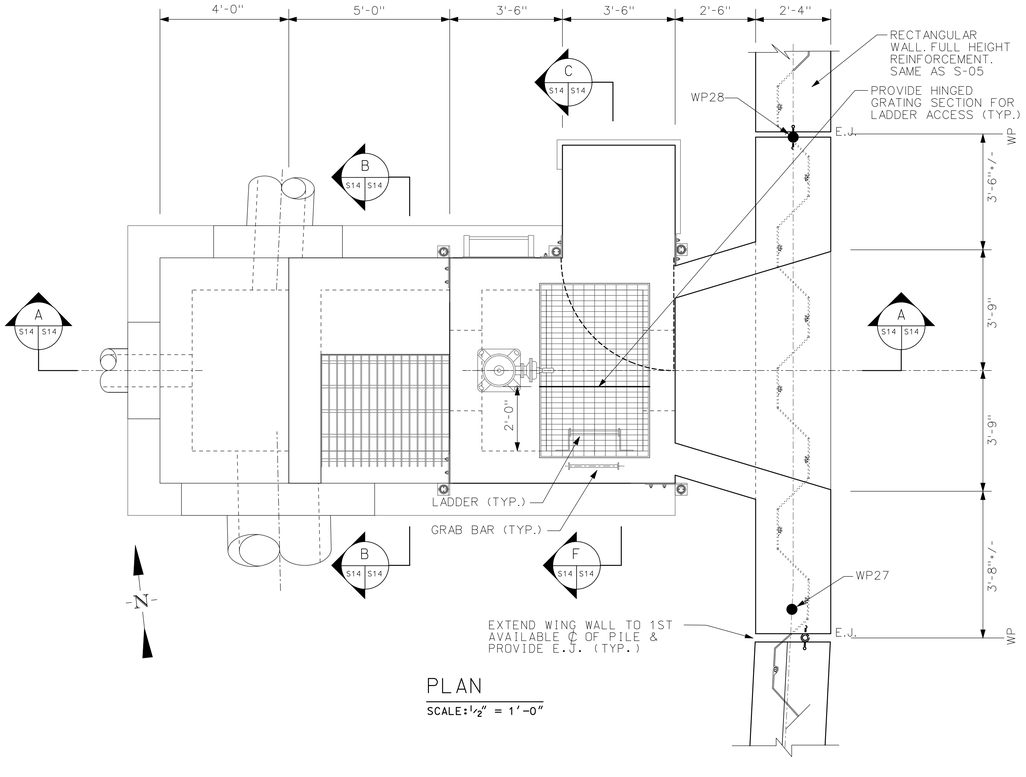

PLAN

SCALE: 1/2" = 1'-0"

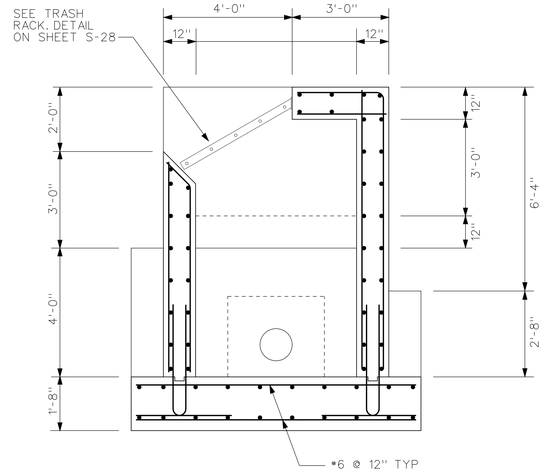

SECTION B

SCALE: 1/2" = 1'-0"

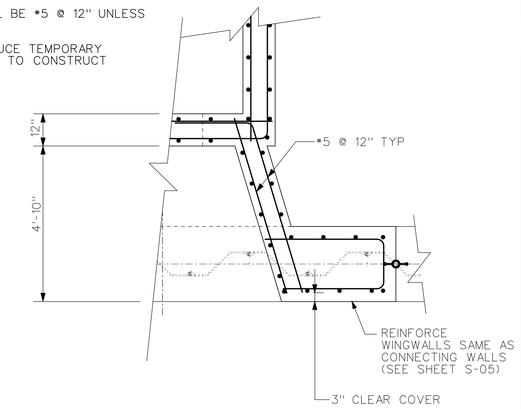

SECTION D

SCALE: 1/2" = 1'-0"

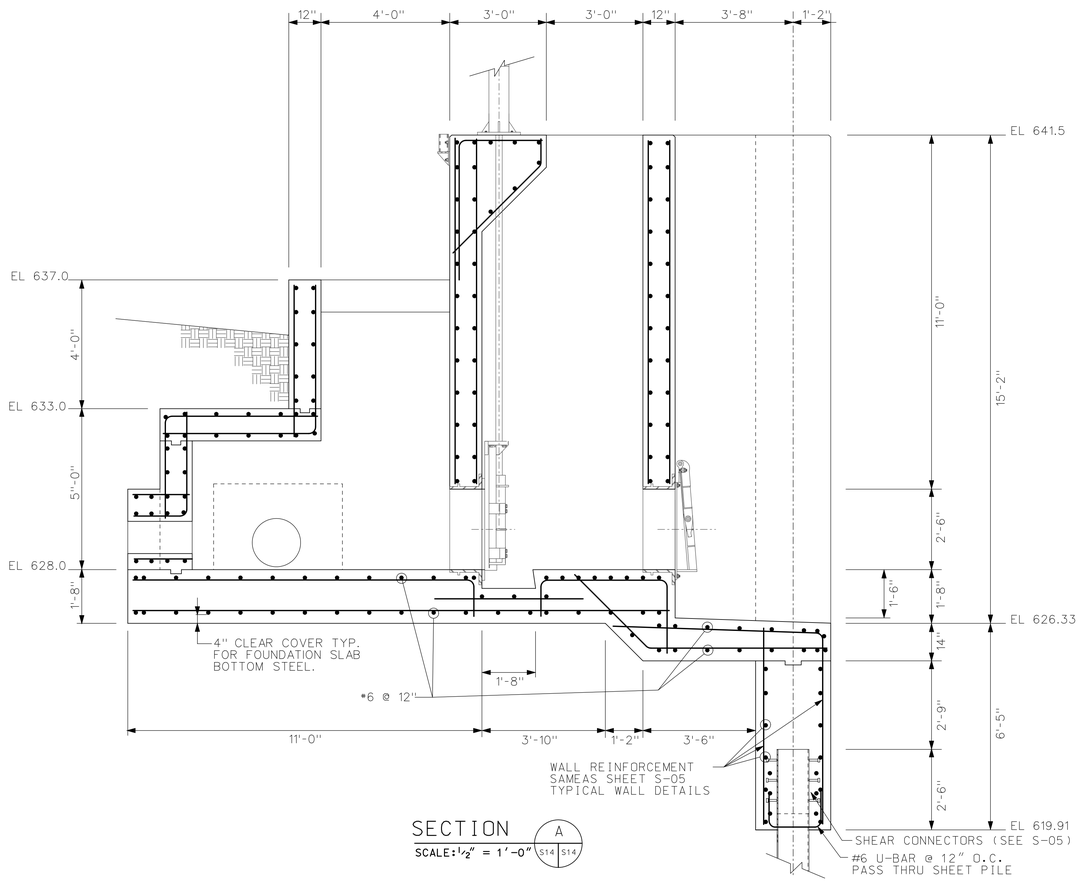

SECTION A

SCALE: 1/2" = 1'-0"

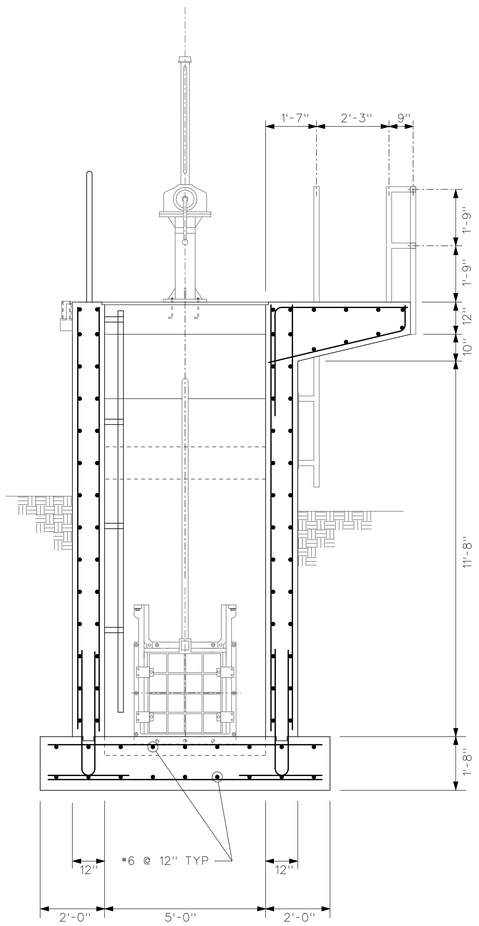

SECTION C

SCALE: 1/2" = 1'-0"

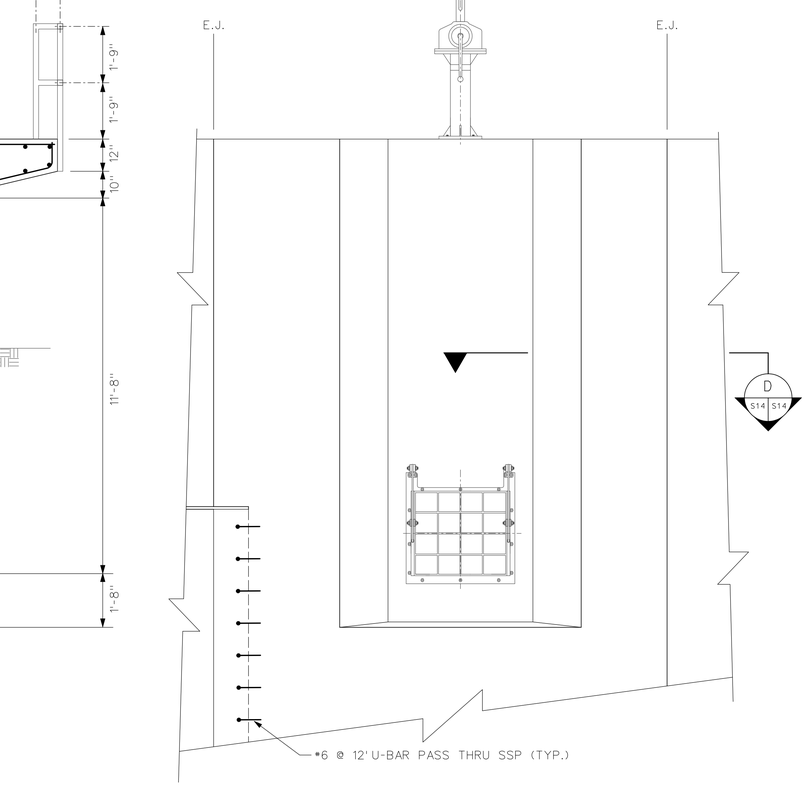

EAST ELEVATION

SCALE: 1/2" = 1'-0"

12 0 1 2 3 4 5

SCALE: 1/2" = 1'-0"

US Army Corps of Engineers
Chicago District

SYMBOL	AMENDMENT DESCRIPTION	DATE APPROVED	SYMBOL	DESCRIPTION	DATE APPROVED

DESIGNED BY: L.T., J.P.
DATE: 08-18-2008
DRAWN BY: M.N., D.S.
SCALE: AS SHOWN
CHECKED BY: J.P.
DRAWING CODE: DESP37-S14.DGN
REVIEWED BY: S.T.
SOLICITATION NUMBER: W912P6-08-B-0003

U.S. ARMY ENGINEER DISTRICT
CORPS OF ENGINEERS
CHICAGO, ILLINOIS

DES PLAINES RIVER, ILLINOIS
LOCAL FLOOD PROTECTION
FLOODWALL 37
RIVER RD/MILWAUKEE AVE.
CLOSURE #5
PLAN, ELEVATIONS AND SECTIONS

SHEET REFERENCE NUMBER:
S-14

PLOT DATE: 8/18/2008
FILENAME: Desp37-S14.dgn

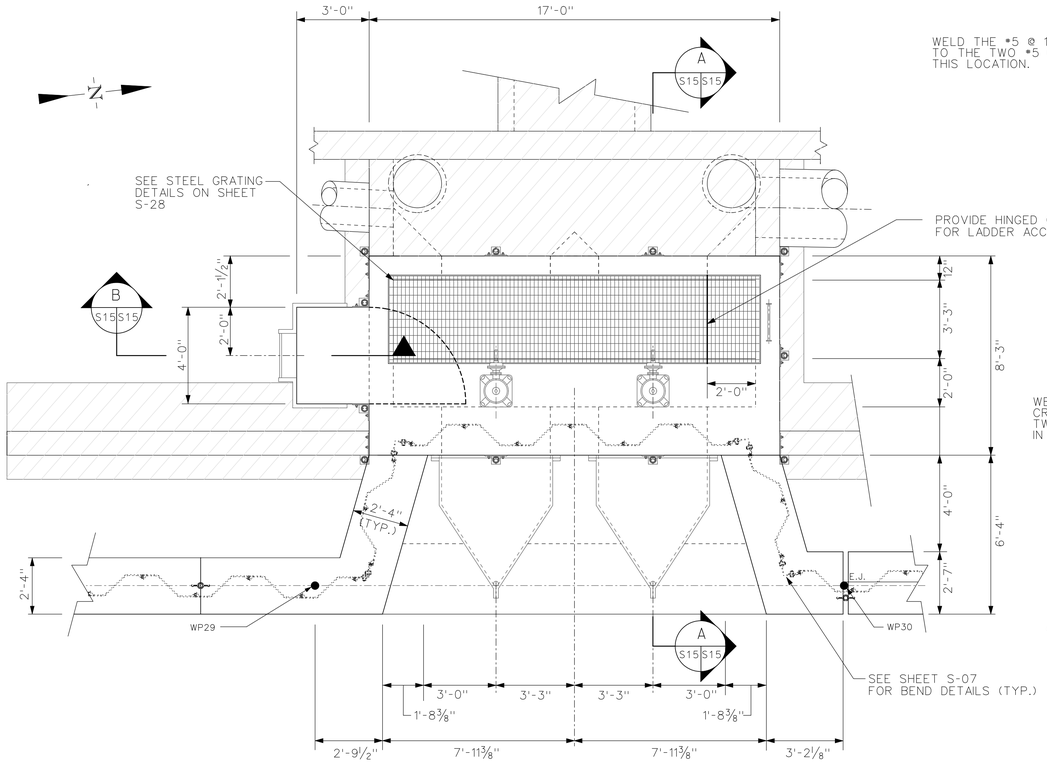

PLAN
SCALE: ⅜" = 1'-0"

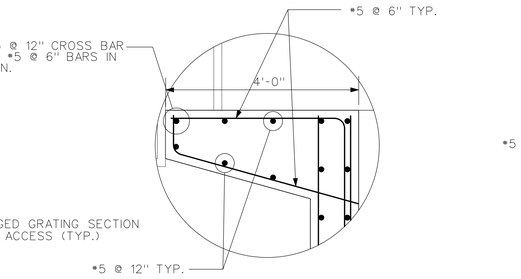

DETAIL 1
NTS

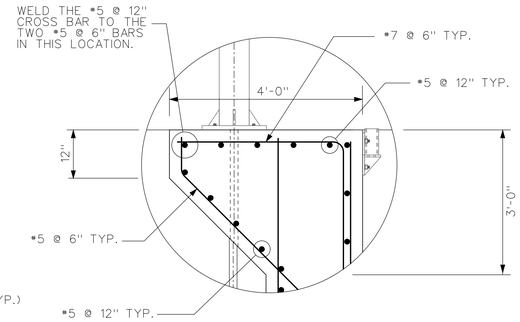

DETAIL 2
NTS

NOTES:

1. CLEAR COVER ON MEMBERS 12" THICK OR LESS IS 2" TYP AND 3" TYP ON MEMBERS GREATER THAN 12" THICK UNLESS OTHERWISE NOTED.

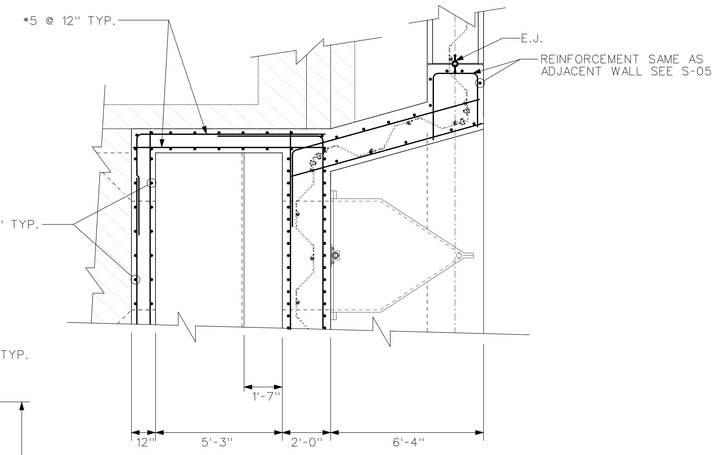

SECTION C
SCALE: ⅜" = 1'-0"

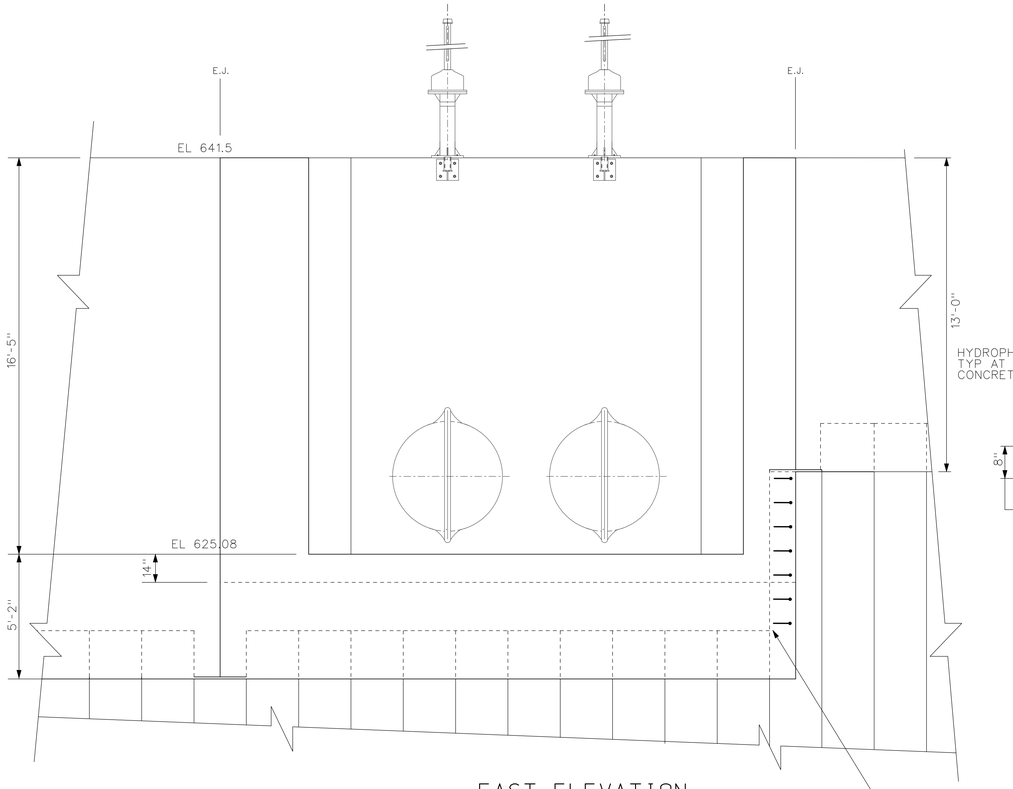

EAST ELEVATION
SCALE: ⅜" = 1'-0"

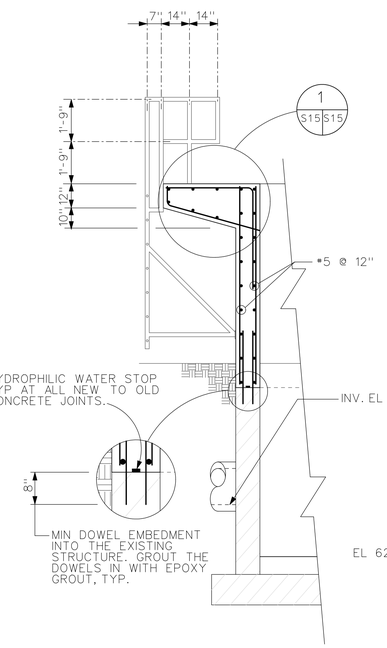

SECTION B
SCALE: ⅜" = 1'-0"

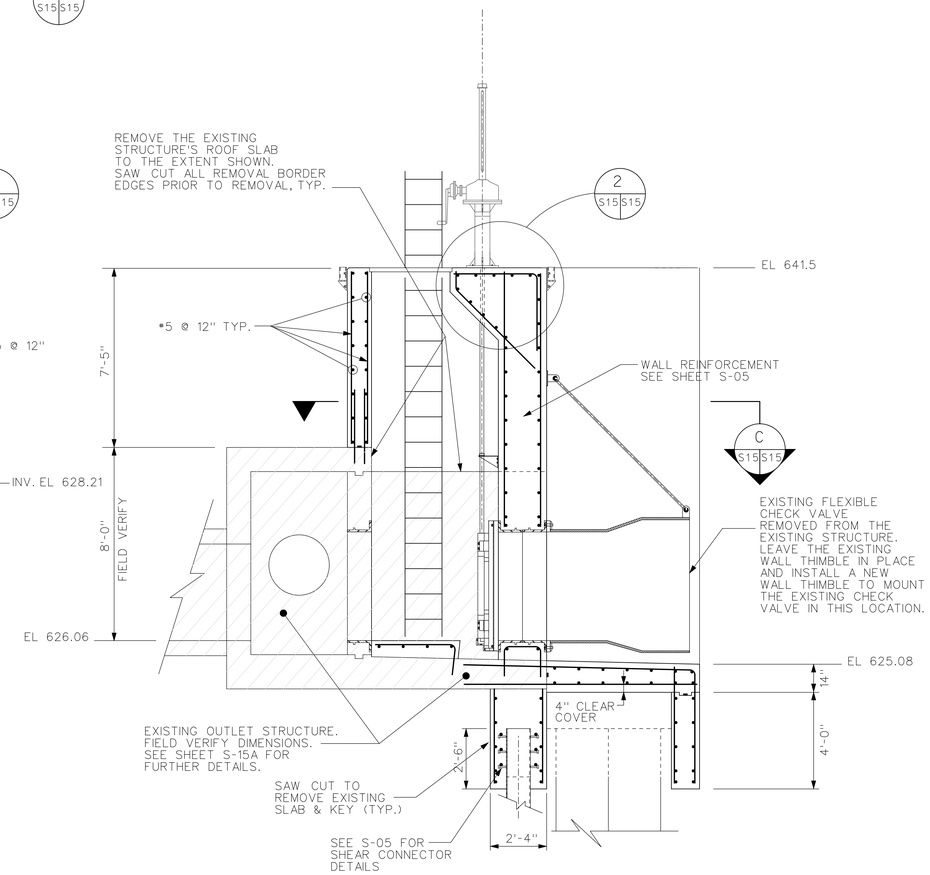

SECTION A
SCALE: ⅜" = 1'-0"

12 0 1 2 3 4 5
SCALE: ⅜" = 1'-0"

US Army Corps of Engineers
Chicago District

SYMBOL	AMENDMENT DESCRIPTION	DATE APPROVED	SYMBOL	DESCRIPTION	DATE APPROVED

DESIGNED BY: L.T., J.P.
DATE: 08-18-2008
DRAWN BY: M.N., D.S.
SCALE: AS SHOWN
CHECKED BY: J.P.
DRAWING CODE: DESP37-S15.DGN
REVIEWED BY: S.T.
SOLICITATION NUMBER: W912P6-08-B-0003

U.S. ARMY ENGINEER DISTRICT
CORPS OF ENGINEERS
CHICAGO, ILLINOIS

DES PLAINES RIVER, ILLINOIS
LOCAL FLOOD PROTECTION
FLOODWALL 37
RIVER RD/MILWAUKEE AVE.
BACKFLOW STRUCTURE NO. 1
STRUCTURAL ADDITIONS
PLAN, ELEVATIONS AND SECTIONS

SHEET REFERENCE NUMBER:
S-15
SHEET 95 OF 131

PLOT DATE: 8/18/2008
FILENAME: Desp37-S15.dgn

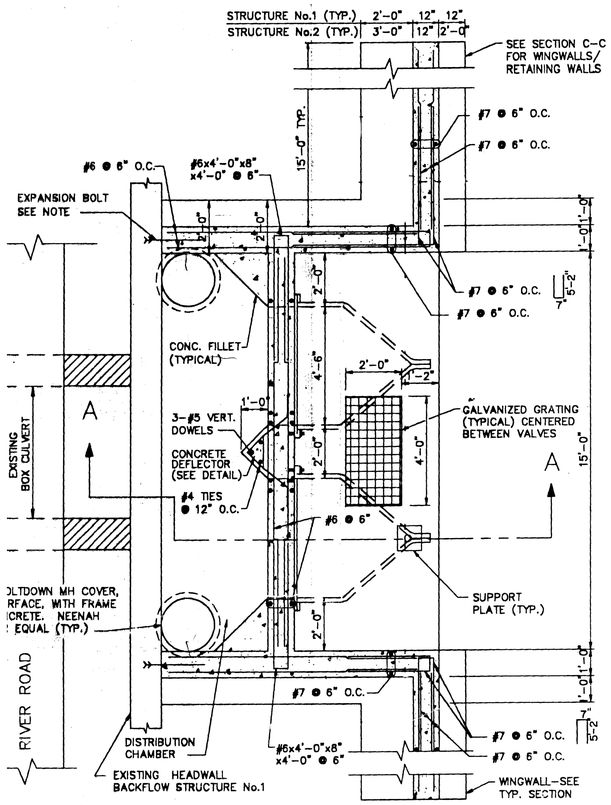

BACKFLOW STRUCTURE No.1 AND No.2

N.T.S.

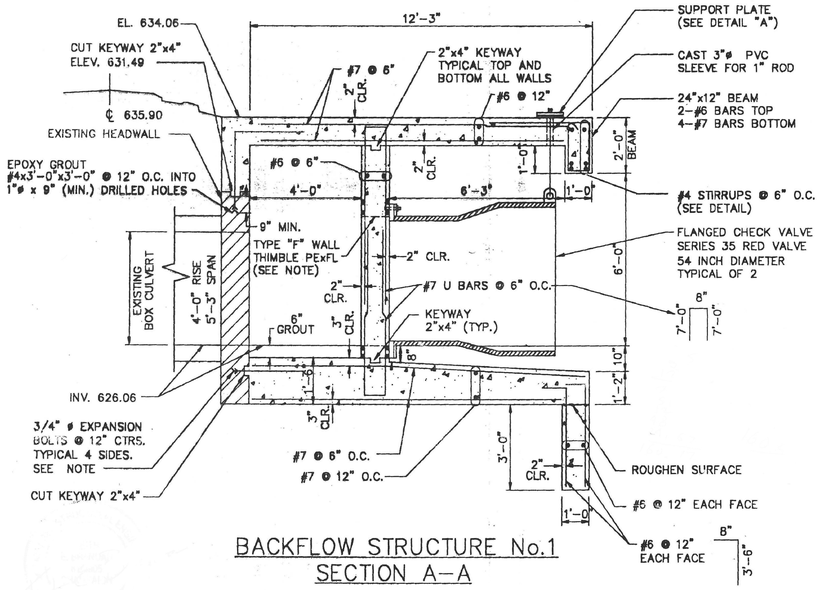

BACKFLOW STRUCTURE No.1
SECTION A-A

N.T.S.

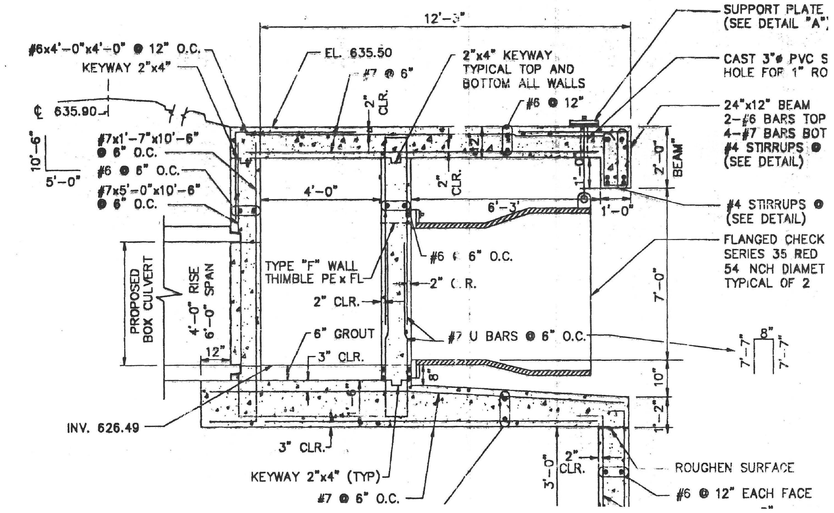

BACKFLOW STRUCTURE No.2
SECTION A-A

N.T.S.

NOTE: DETAILS FOR INFORMATION ONLY
EXISTING BACK WATER CONTROL
STRUCTURE CONNECTS TO CLOSURE #6

EXISTING BACKFLOW STRUCTURE

US Army Corps of Engineers
Chicago District

SYMBOL	AMENDMENT DESCRIPTION	DATE APPROVED	SYMBOL	DESCRIPTION	DATE APPROVED

DESIGNED BY: L.T., J.P. | DATE: 08-18-2008
DRAWN BY: M.N., D.S. | SCALE: AS SHOWN
CHECKED BY: J.P. | DRAWING CODE: DESP37-S15.DGN
REVIEWED BY: S.T. | SOLICITATION NUMBER: W912P6-08-B-0003

U.S. ARMY ENGINEER DISTRICT
CORPS OF ENGINEERS
CHICAGO, ILLINOIS

DES PLAINES RIVER, ILLINOIS
LOCAL FLOOD PROTECTION
FLOODWALL 37
RIVER RD/MILWAUKEE AVE.
EXISTING BACKFLOW STRUCTURES
NO. 1 AND NO. 2
PLAN AND SECTIONS

SHEET REFERENCE NUMBER:
S-15A
SHEET 96 OF 131

PLOT DATE: 8/18/2008
FILENAME: Desp37-S15A.dgn

NOTES:

1. CLEAR COVER ON MEMBERS 12" THICK OR LESS IS 2" TYP AND 3" TYP ON MEMBERS GREATER THAN 12" THICK UNLESS OTHERWISE NOTED.
2. ALL REINFORCEMENT SHALL BE #5 @ 12" UNLESS OTHERWISE SHOWN.
3. THE ANGLE FROM THE HORIZONTAL IS 94 DEGREES PLUS/MINUS. FIELD VERIFY.

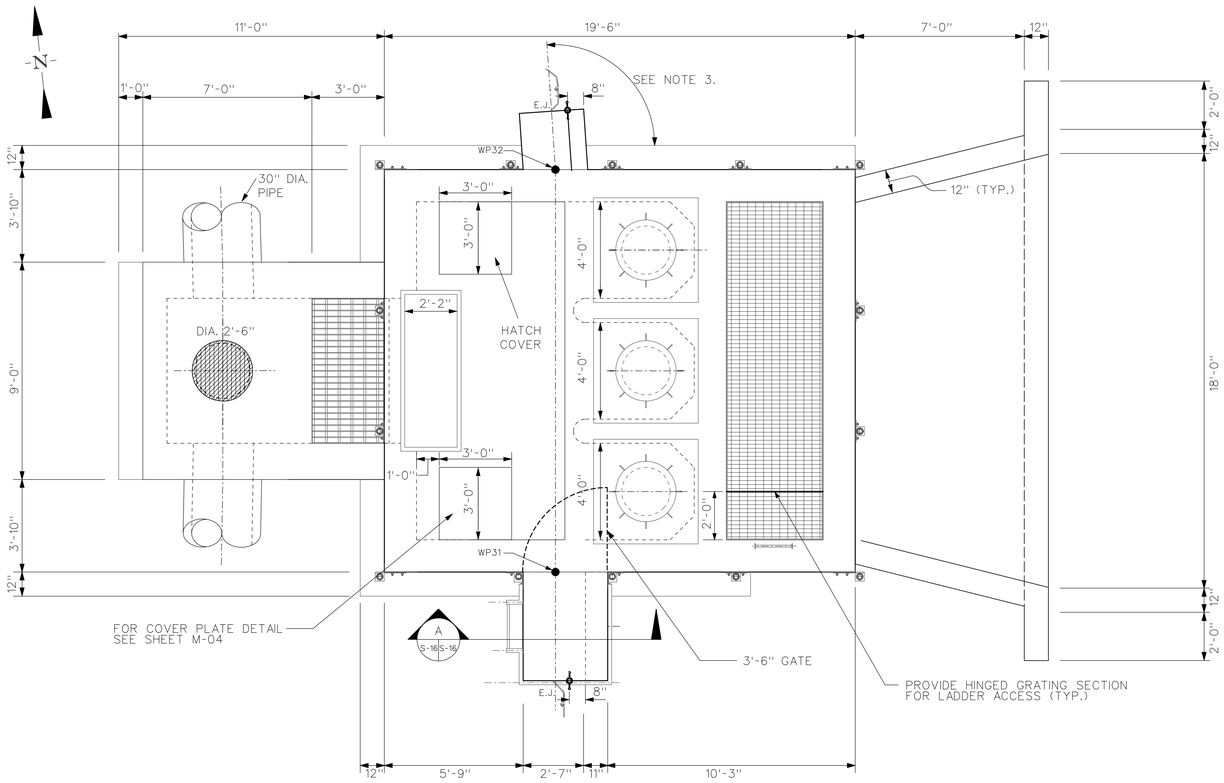

PLAN

SCALE: 3/8" = 1'-0"

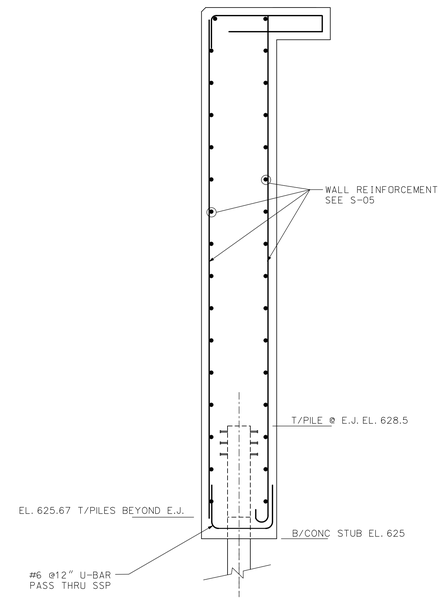

SECTION A S-16 S-16

SCALE: 1/2 " = 1'-0"

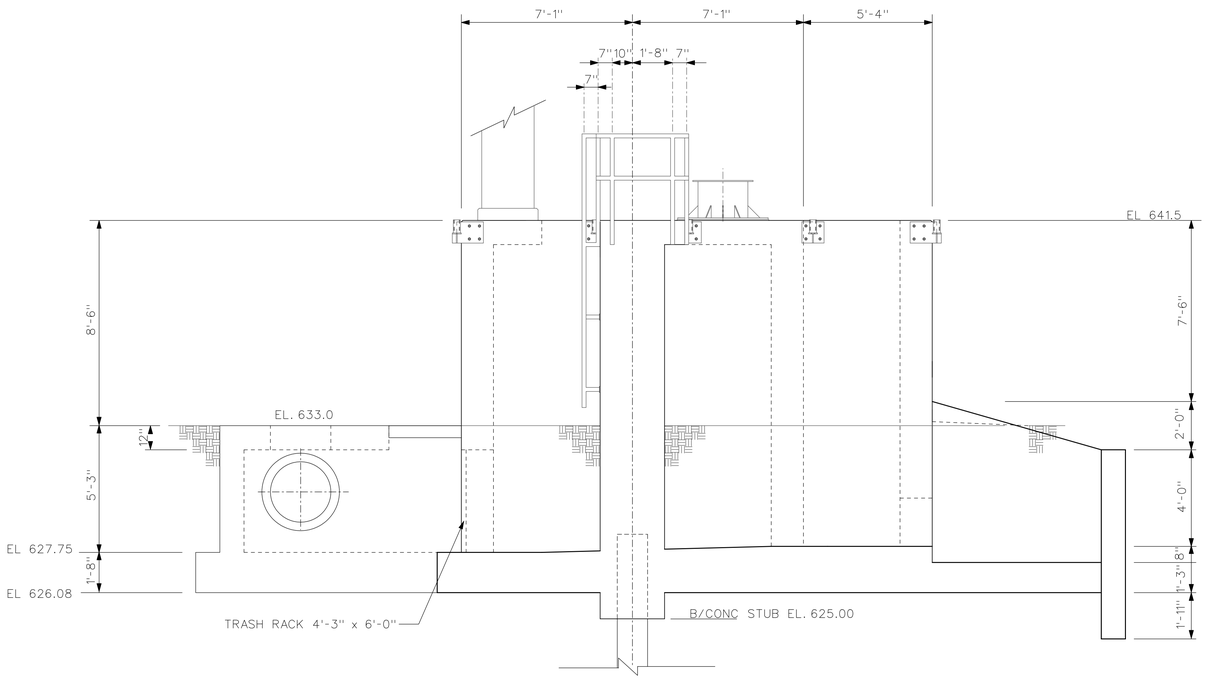

SOUTH ELEVATION

SCALE: 3/8" = 1'-0"

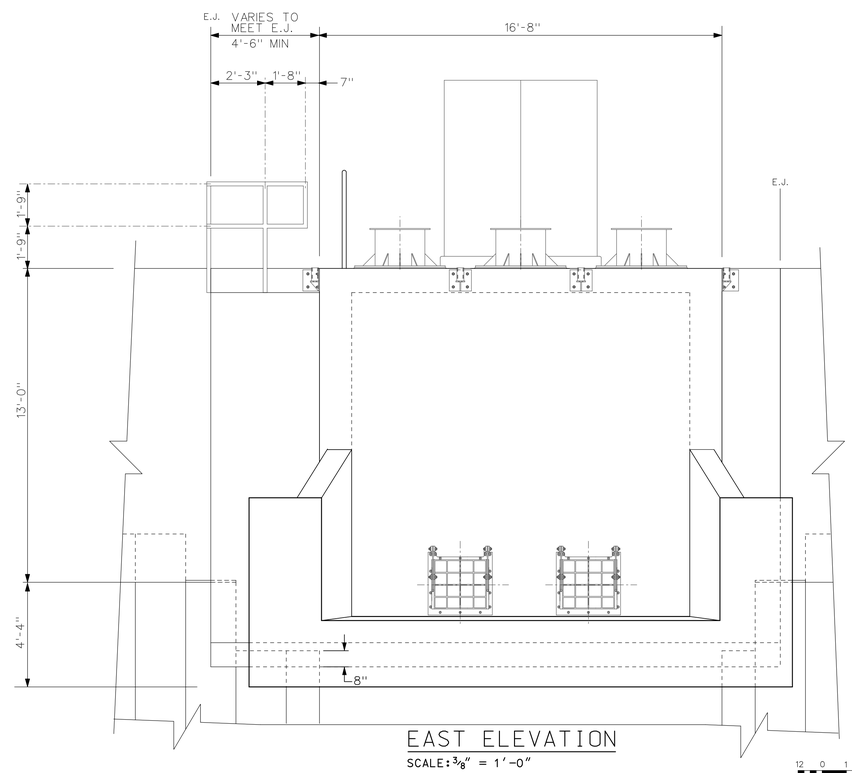

EAST ELEVATION

SCALE: 3/8" = 1'-0"

SCALE: 3/8" = 1'-0"

US Army Corps of Engineers
Chicago District

SYMBOL	AMENDMENT DESCRIPTION	DATE	APPROVED	SYMBOL	DESCRIPTION	DATE	APPROVED

DESIGNED BY: L.T., J.P.
DATE: 08-18-2008
DRAWN BY: M.N., D.S.
SCALE: AS SHOWN
CHECKED BY: J.P.
DRAWING CODE: DESP37-S21.DGN
REVIEWED BY: S.T.
SOLICITATION NUMBER: W912P6-08-B-0003

U.S. ARMY ENGINEER DISTRICT
CORPS OF ENGINEERS
CHICAGO, ILLINOIS

DES PLAINES RIVER, ILLINOIS
LOCAL FLOOD PROTECTION
FLOODWALL 37
RIVER RD/MILWAUKEE AVE.
PUMP STATION #2
PLAN AND ELEVATIONS

SHEET REFERENCE NUMBER:
S-16

PLOT DATE: 8/18/2008
FILENAME: Desp37-S16.dgn

NOTES:

1. ALL REINFORCING CLEAR COVER SHALL BE 2" TYP ON MEMBERS 12" THICK OR LESS AND SHALL BE 3" TYP ON MEMBERS GREATER THAN 12" THICK UNLESS OTHERWISE NOTED.
2. ALL REINFORCEMENT SHALL BE #5 @ 12" UNLESS OTHERWISE SHOWN.

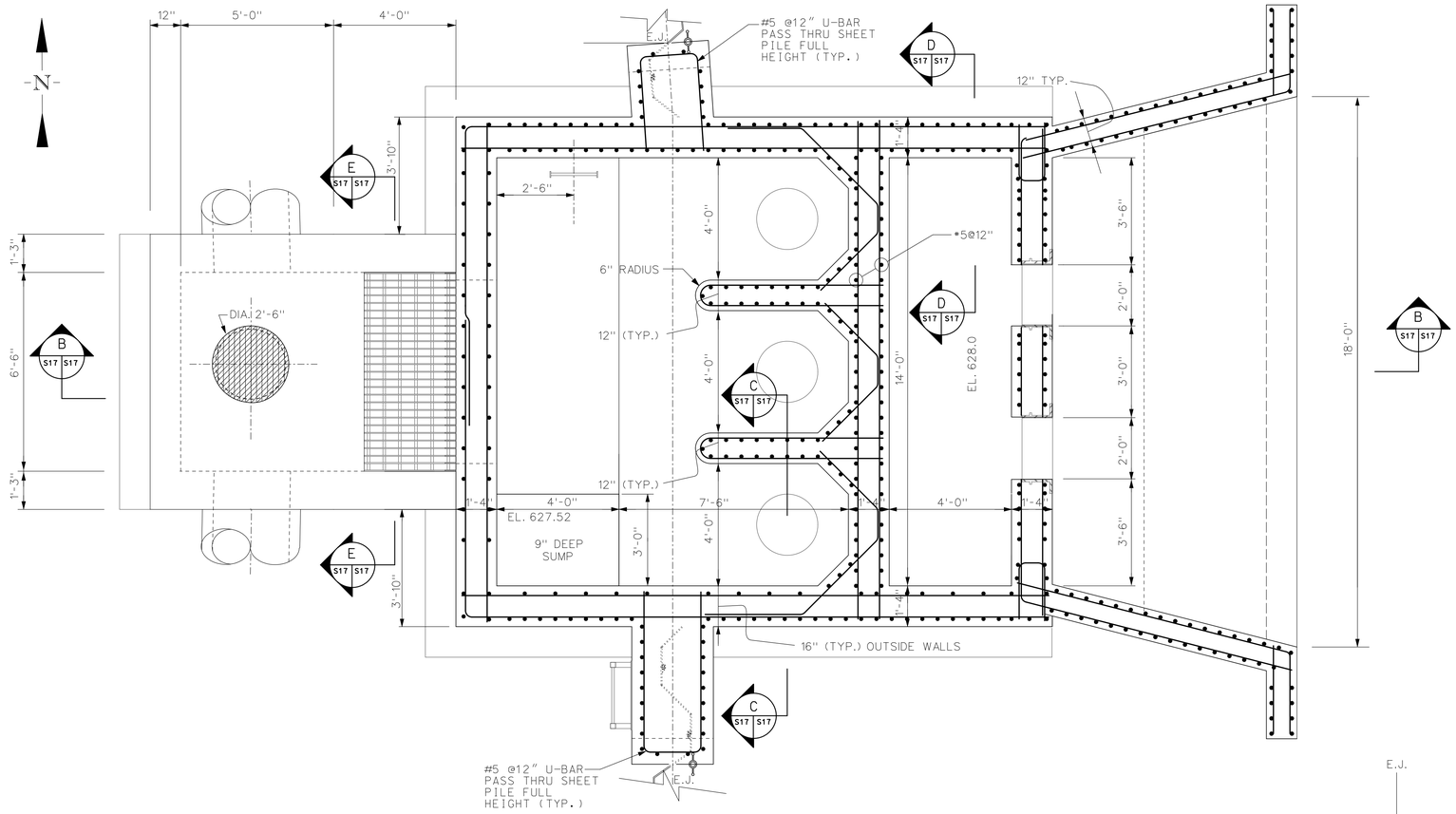

SECTION A
SCALE: 1/2" = 1'-0"

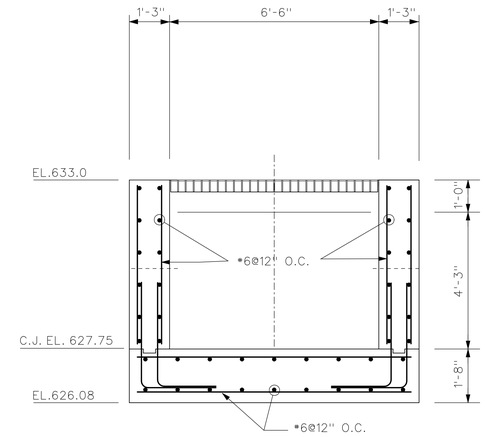

SECTION E
SCALE: 1/2" = 1'-0"

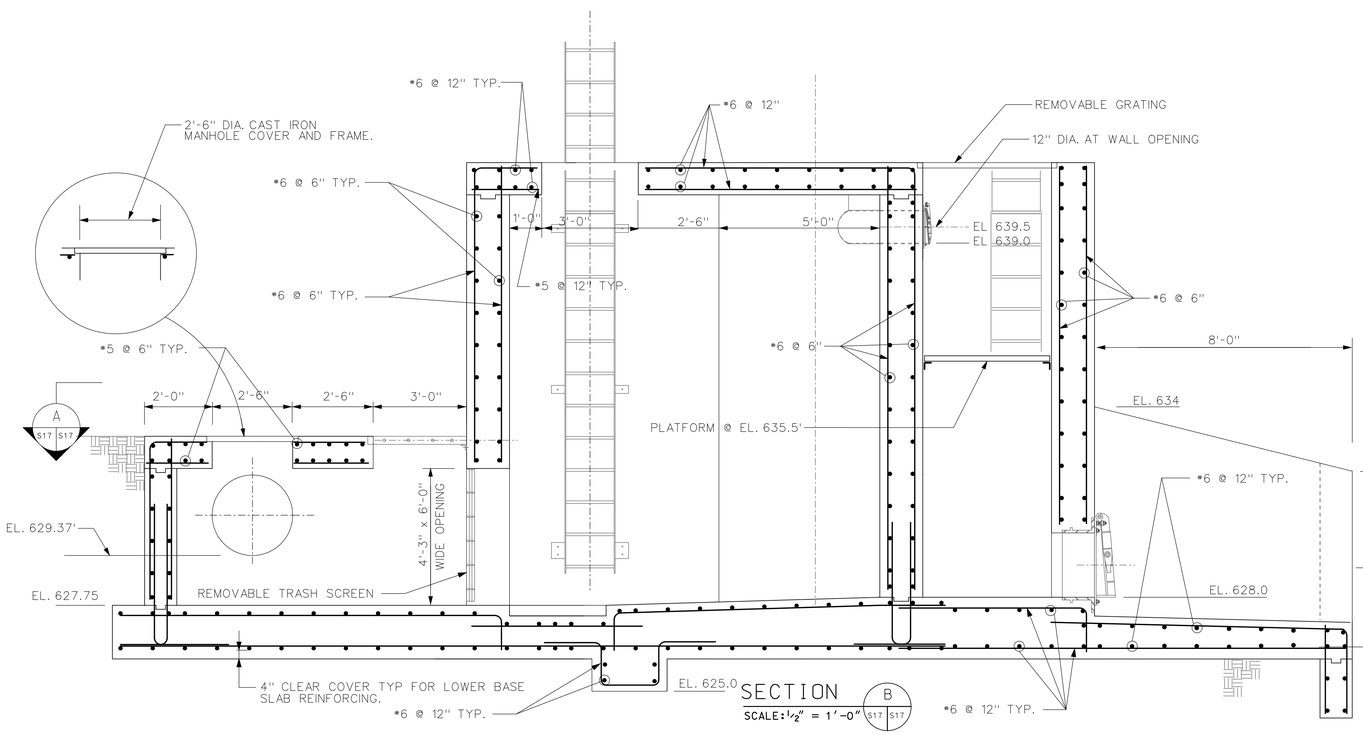

SECTION B
SCALE: 1/2" = 1'-0"

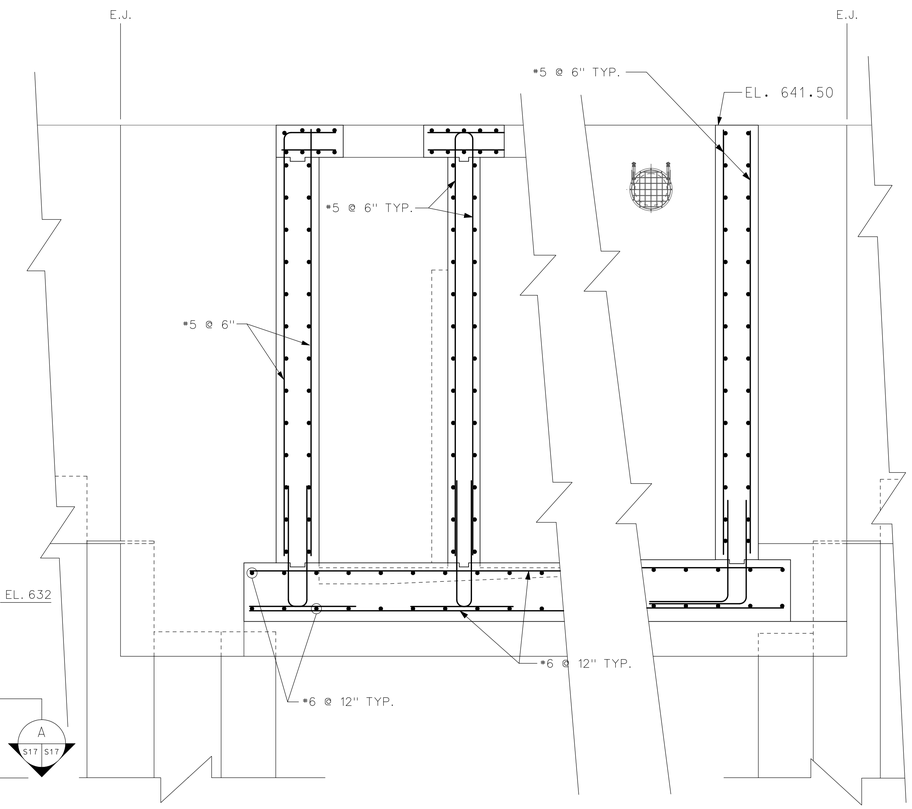

SECTION C
SCALE: 1/2" = 1'-0"

SECTION D
SCALE: 1/2" = 1'-0"

12 0 1 2 3 4 5
SCALE: 1/2" = 1'-0"

US Army Corps of Engineers
Chicago District

SYMBOL	AMENDMENT DESCRIPTION	DATE APPROVED	SYMBOL	DESCRIPTION	DATE APPROVED

DESIGNED BY: L.T., J.P.
DATE: 08-18-2008
DRAWN BY: M.N., D.S.
SCALE: AS SHOWN
CHECKED BY: J.P.
DRAWING CODE: DES-37-S17.DGN
REVIEWED BY: S.T.
SOLICITATION NUMBER: W912P6-08-B-0003

U.S. ARMY ENGINEER DISTRICT
CORPS OF ENGINEERS
CHICAGO, ILLINOIS

DES PLAINES RIVER, ILLINOIS
LOCAL FLOOD PROTECTION
FLOODWALL 37
RIVER RD/MILWAUKEE AVE.
PUMP STATION #2
SECTIONS

SHEET REFERENCE NUMBER:
S-17
SHEET 98 OF 131

PLOT DATE: 8/18/2008
FILENAME: Des37-S17.dgn

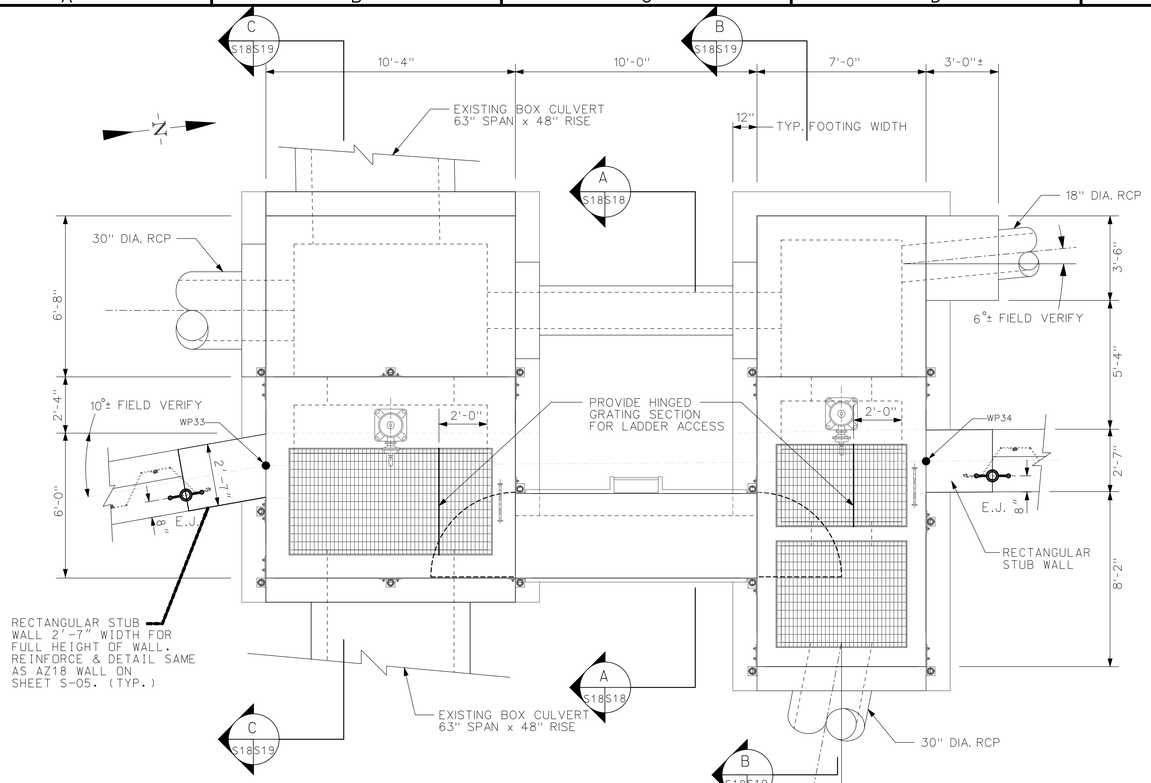

CLOSURE #6 PLAN

SCALE: 3/8" = 1'-0"

CLOSURE #7 PLAN

SCALE: 3/8" = 1'-0"

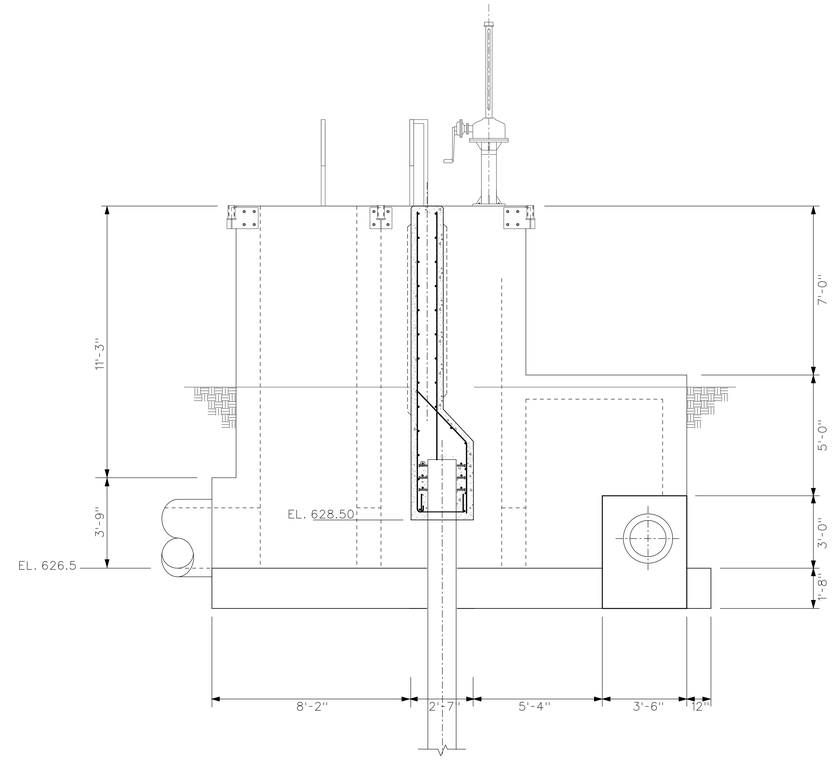

CLOSURE BOX
NORTH ELEVATION

SCALE: 3/8" = 1'-0"

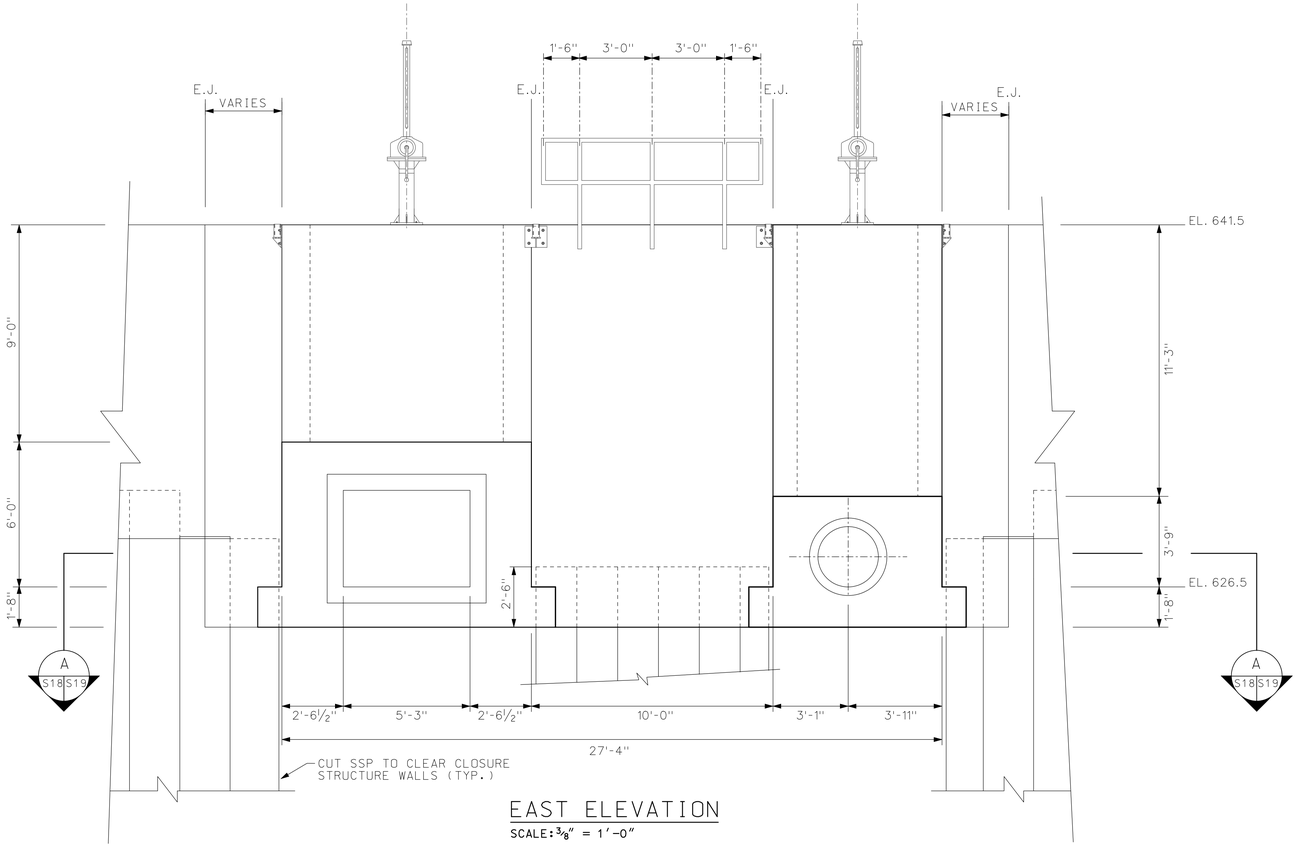

EAST ELEVATION

SCALE: 3/8" = 1'-0"

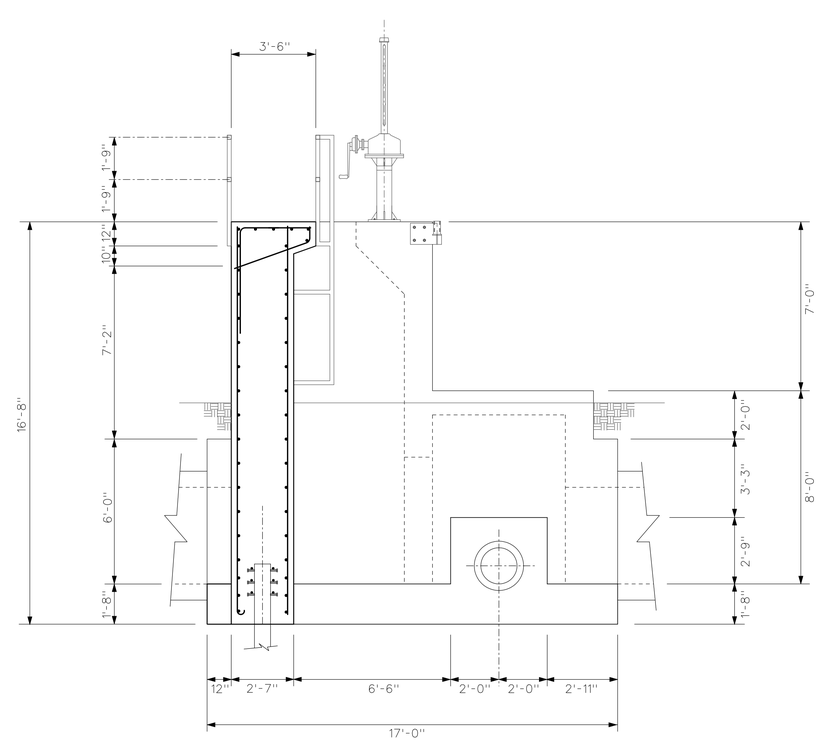

SECTION A S18 S18

SCALE: 3/8" = 1'-0"

12 0 1 2 3 4 5

SCALE: 3/8" = 1'-0"

US Army Corps
of Engineers
Chicago District

SYMBOL	AMENDMENT DESCRIPTION	DATE APPROVED	SYMBOL	DESCRIPTION	DATE APPROVED

DESIGNED BY: L.T., J.P.
DATE: 08-18-2008
DRAWN BY: M.N., D.S.
SCALE: AS SHOWN
CHECKED BY: J.P.
DRAWING CODE: DESP37-S18.DGN
REVIEWED BY: S.T.
SOLICITATION NUMBER: W912P6-08-B-0003

U.S. ARMY ENGINEER DISTRICT
CORPS OF ENGINEERS
CHICAGO, ILLINOIS

DES PLAINES RIVER, ILLINOIS
LOCAL FLOOD PROTECTION
FLOODWALL 37
RIVER RD/MILWAUKEE AVE.
CLOSURES #6 AND #7
PLAN AND ELEVATIONS

SHEET REFERENCE NUMBER:

S-18

SHEET 99 OF 131

PLOT DATE: 8/18/2008
FILENAME: Desp37-S18.dgn

NOTES:

1. ALL REINFORCING CLEAR COVER SHALL BE 2" TYP ON MEMBERS 12" THICK OR LESS AND SHALL BE 3" TYP ON MEMBERS GREATER THAN 12" THICK UNLESS OTHERWISE NOTED.

2. ALL REINFORCEMENT SHALL BE #5 @ 12" UNLESS OTHERWISE SHOWN.

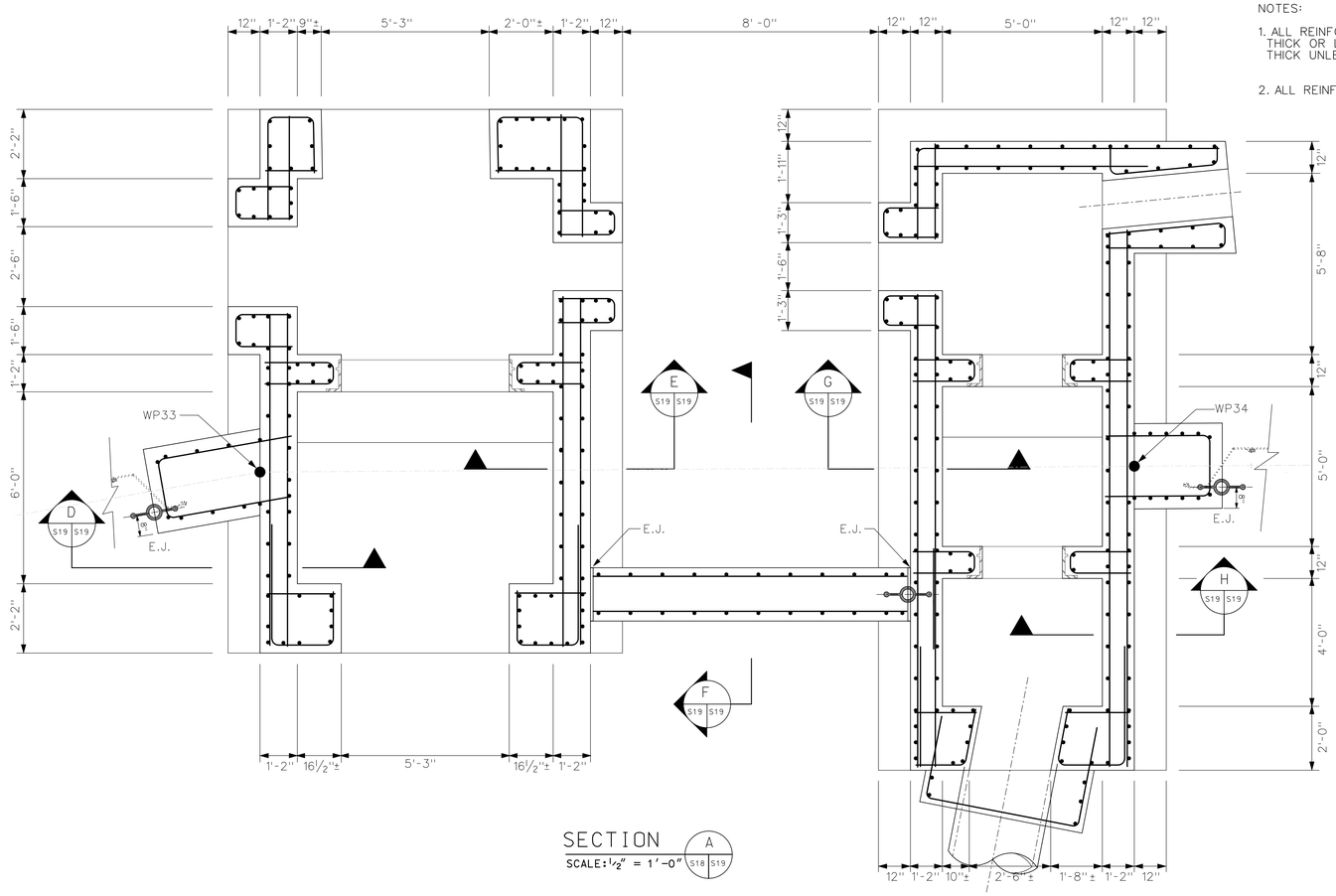

SECTION A
SCALE: ½" = 1'-0" (S18 S19)

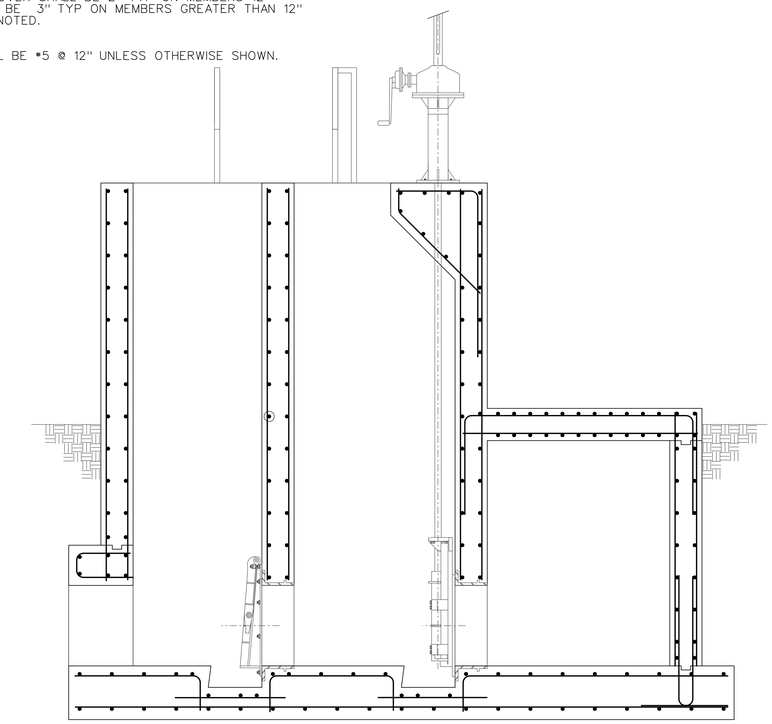

SECTION B
SCALE: ½" = 1'-0" (S18 S19)

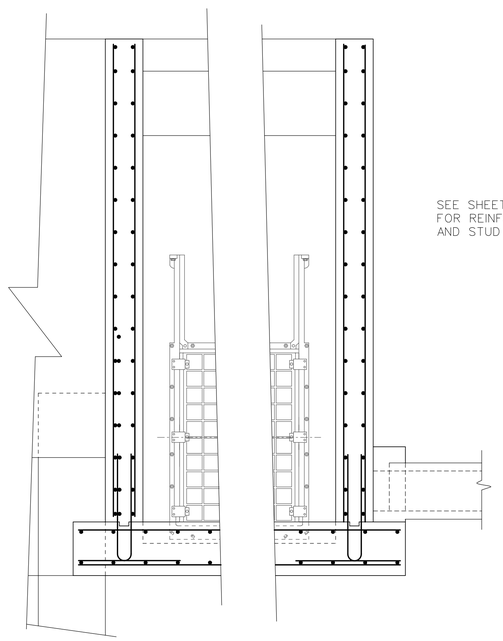

SECTION D
SCALE: ½" = 1'-0" (S19 S19)

SECTION E
SCALE: ½" = 1'-0" (S19 S19)

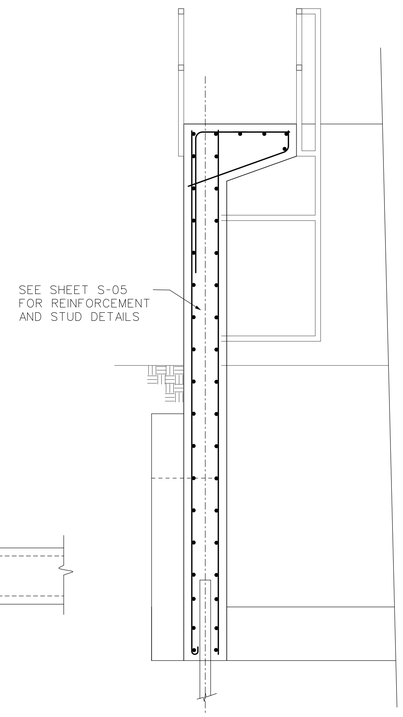

SECTION F
SCALE: ½" = 1'-0" (S19 S19)

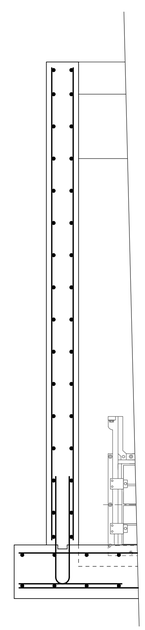

SECTION G
SCALE: ½" = 1'-0" (S19 S19)

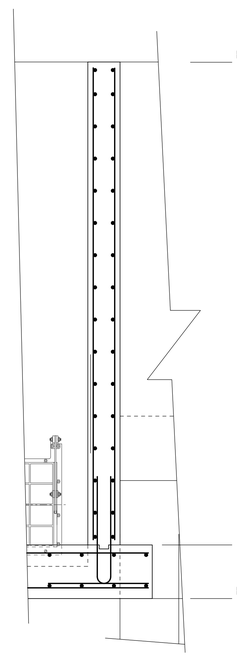

SECTION H
SCALE: ½" = 1'-0" (S19 S19)

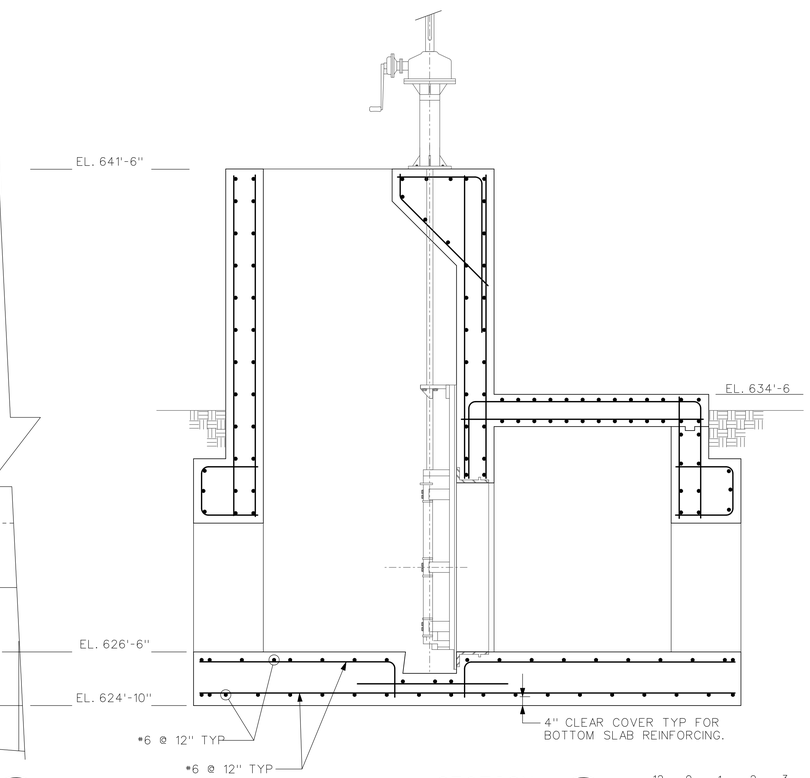

SECTION C
SCALE: ½" = 1'-0" (S18 S19)

12 0 1 2 3 4 5
SCALE: ½" = 1'-0"

US Army Corps of Engineers
Chicago District

SYMBOL	AMENDMENT DESCRIPTION	DATE APPROVED	SYMBOL	DESCRIPTION	DATE APPROVED

DESIGNED BY: L.T., J.P.
DRAWN BY: M.N., D.S.
CHECKED BY: J.P.
REVIEWED BY: S.T.
DATE: 08-18-2008
SCALE: AS SHOWN
DRAWING CODE: DESP37-S19.DGN
SOLICITATION NUMBER: W912P6-08-B-0003

U.S. ARMY ENGINEER DISTRICT
CORPS OF ENGINEERS
CHICAGO, ILLINOIS

DES PLAINES RIVER, ILLINOIS
LOCAL FLOOD PROTECTION
FLOODWALL 37
RIVER RD/MILWAUKEE AVE.
CLOSURES #6 AND #7
SECTIONS

SHEET REFERENCE NUMBER:
S-19
SHEET 100 OF 131

PLOT DATE: 8/18/2008
FILENAME: Desp37-S19.dgn

EXISTING 30"Φ RCP. REMOVE EXISTING PIPE BACK TO A JOINT AND BUILD OUT THE PIPE STUB TO MEET THE EXISTING PIPE AT THE JOINT. USE 30"Φ BY 36"Φ PIPE TRANSITION TO ACCOMMODATE FUTURE 36"Φ RCP CONNECTION TO STRUCTURE BY IDOT.

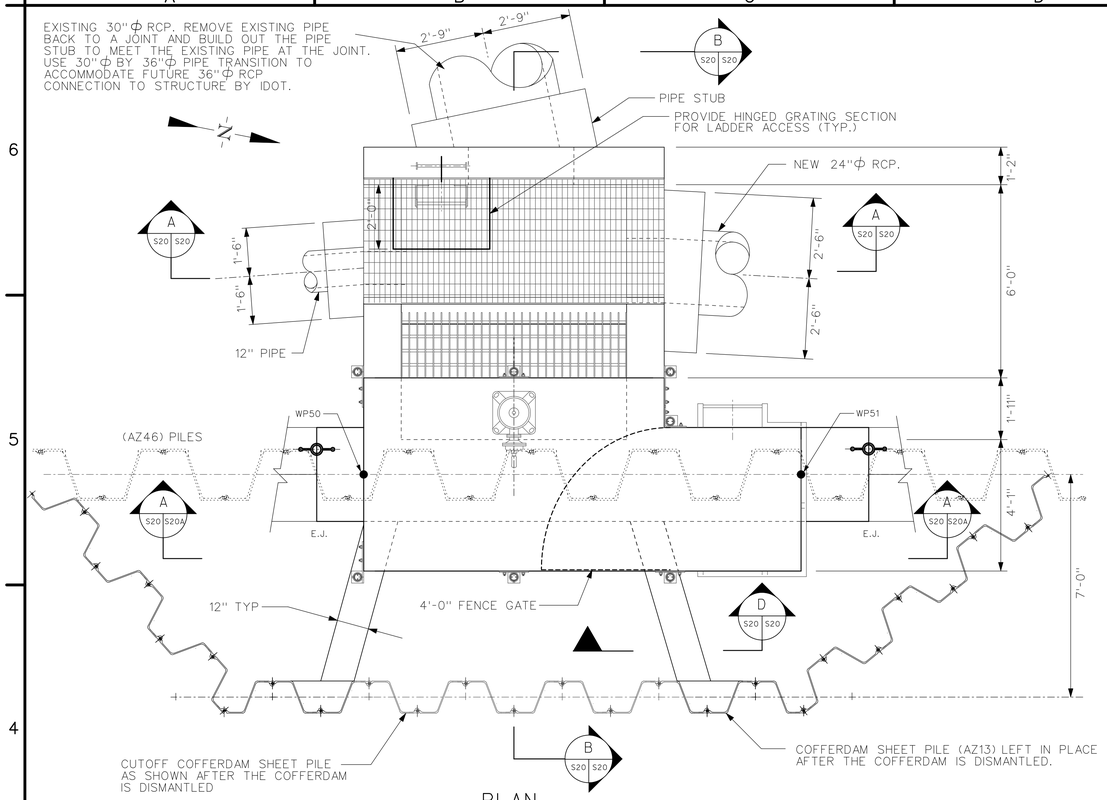

PLAN
SCALE: 1/2" = 1'-0"

NOTES:

1. ALL REINFORCING CLEAR COVER SHALL BE 2" TYP ON MEMBERS 12" THICK OR LESS AND SHALL BE 3" TYP ON MEMBERS GREATER THAN 12" THICK UNLESS OTHERWISE NOTED.
2. ALL REINFORCEMENT SHALL BE #5 @ 12" UNLESS OTHERWISE SHOWN.

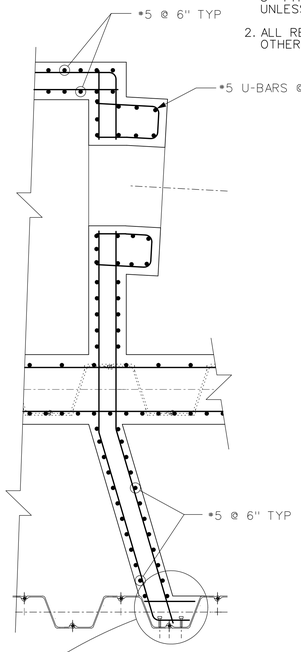

SECTION C
SCALE: 1/2" = 1'-0"

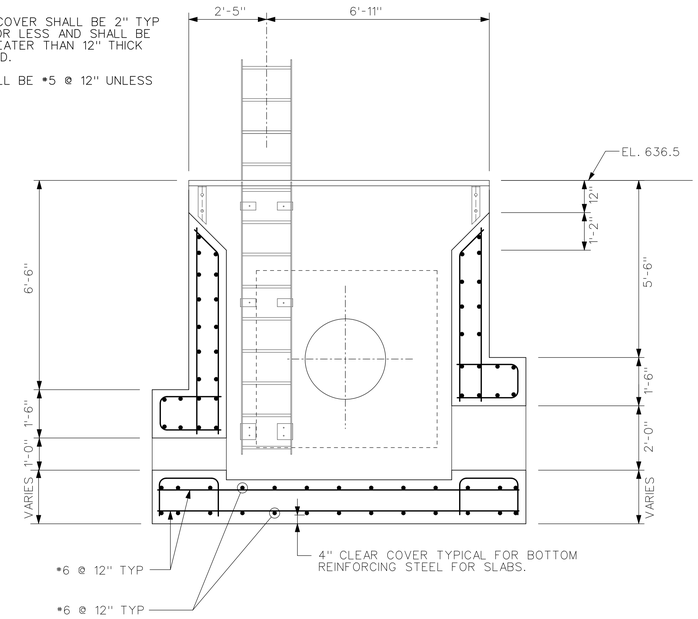

SECTION A
SCALE: 1/2" = 1'-0"

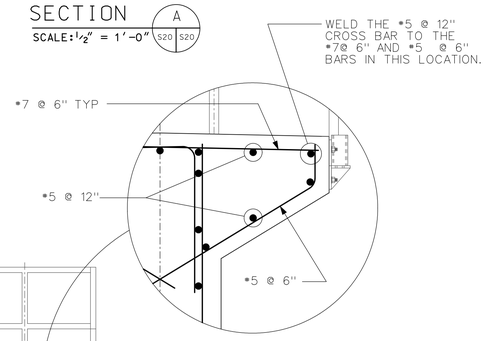

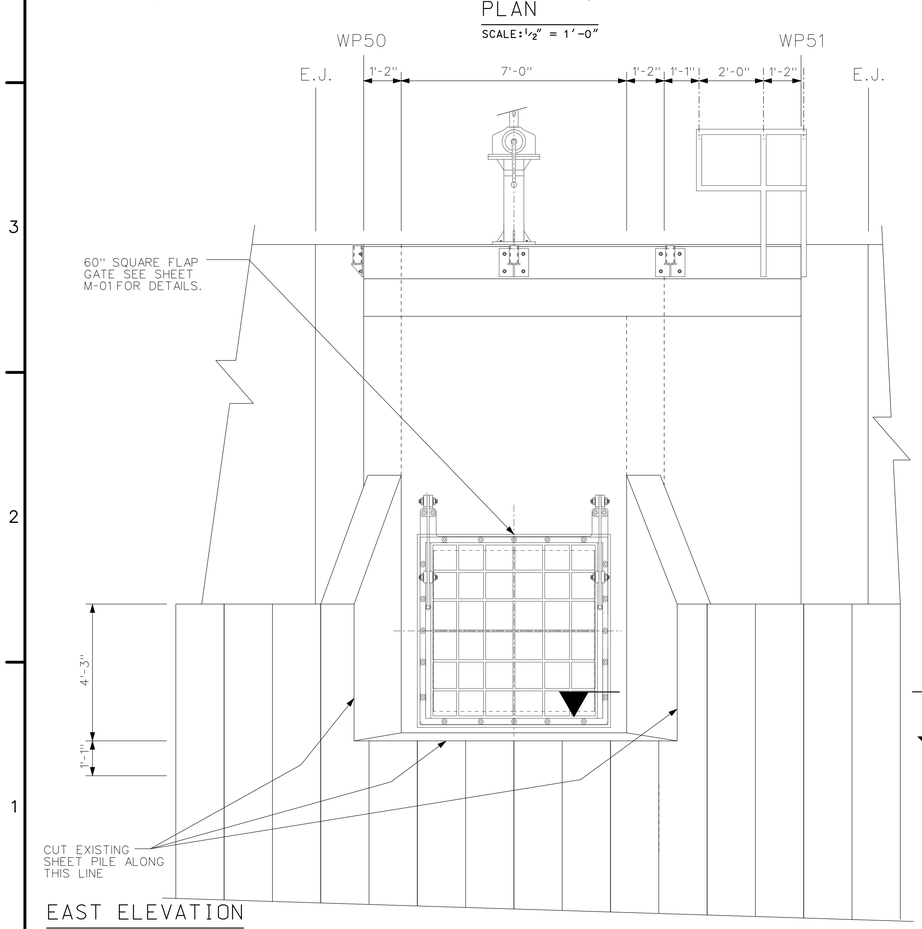

EAST ELEVATION
SCALE: 1/2" = 1'-0"

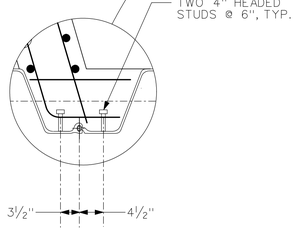

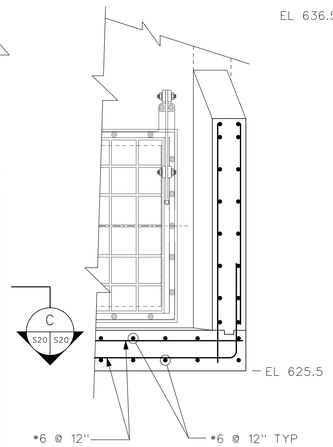

SECTION D
SCALE: 1/2" = 1'-0"

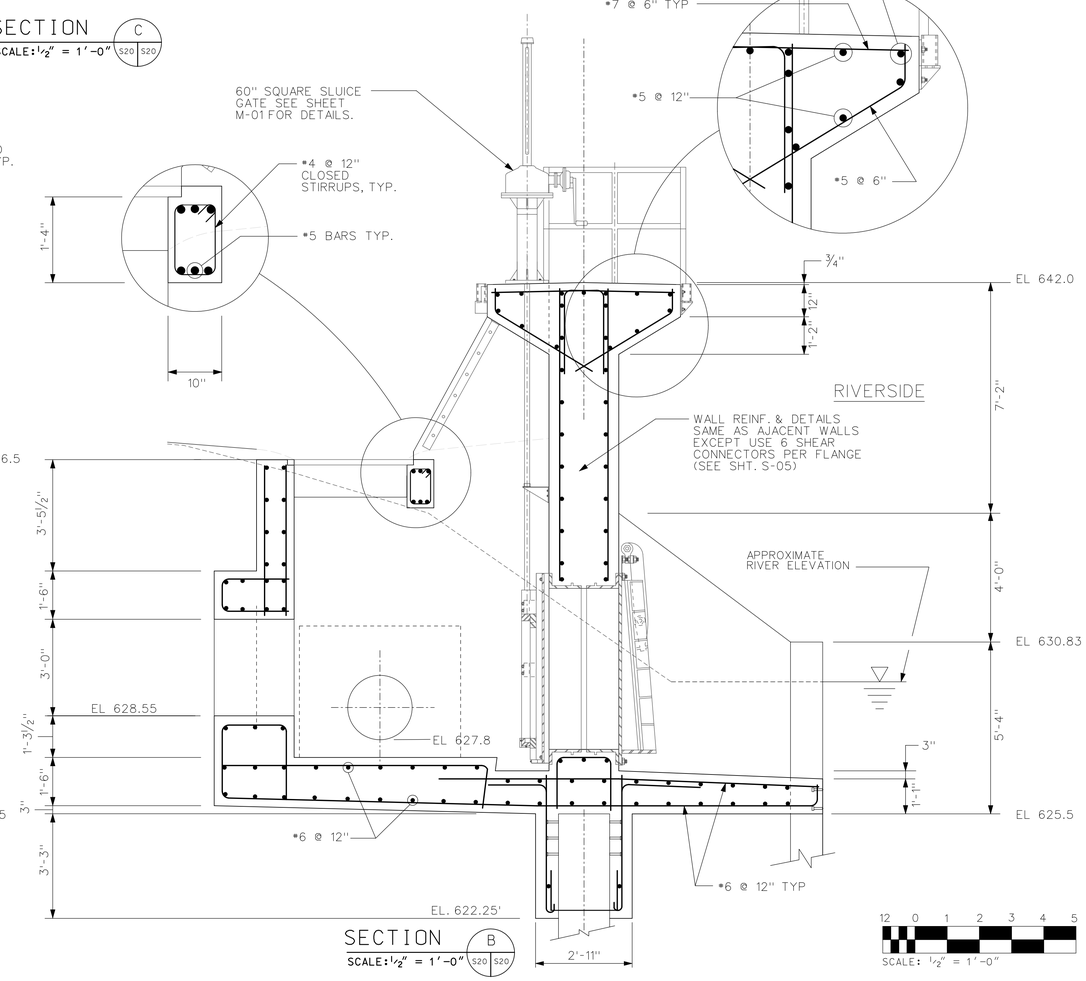

SECTION B
SCALE: 1/2" = 1'-0"

SCALE: 1/2" = 1'-0"

US Army Corps of Engineers
Chicago District

SYMBOL	AMENDMENT DESCRIPTION	DATE APPROVED	SYMBOL	DESCRIPTION	DATE APPROVED

DESIGNED BY: L.T., J.P. | DATE: 08-18-2008
DRAWN BY: M.N., D.S. | SCALE: AS SHOWN
CHECKED BY: J.P. | DRAWING CODE:
REVIEWED BY: S.T. | SOLICITATION NUMBER: W912P6-08-B-0003

U.S. ARMY ENGINEER DISTRICT
CORPS OF ENGINEERS
CHICAGO, ILLINOIS

DES PLAINES RIVER, ILLINOIS
LOCAL FLOOD PROTECTION
FLOODWALL 37
RIVER RD/MILWAUKEE AVE.
CLOSURE #8
ELEVATIONS AND SECTIONS

SHEET REFERENCE NUMBER:
S-20
SHEET 101 OF 131

PLOT DATE: 8/18/2008
FILENAME: Dwg-37-S20.dgn

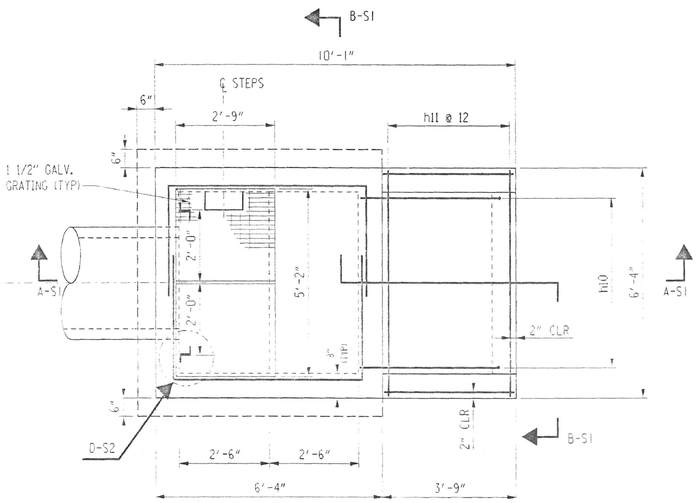

PLAN SECTION

N.T.S.

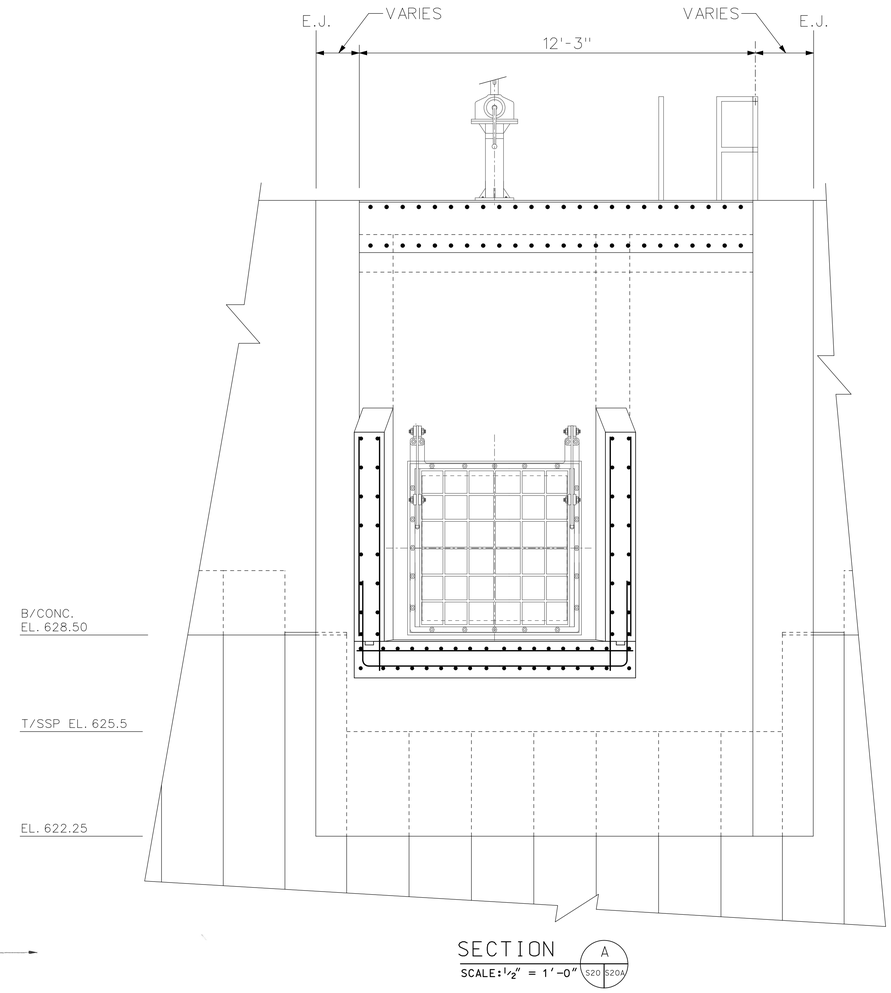

SECTION A
SCALE: 1/2" = 1'-0" (S20 S20A)

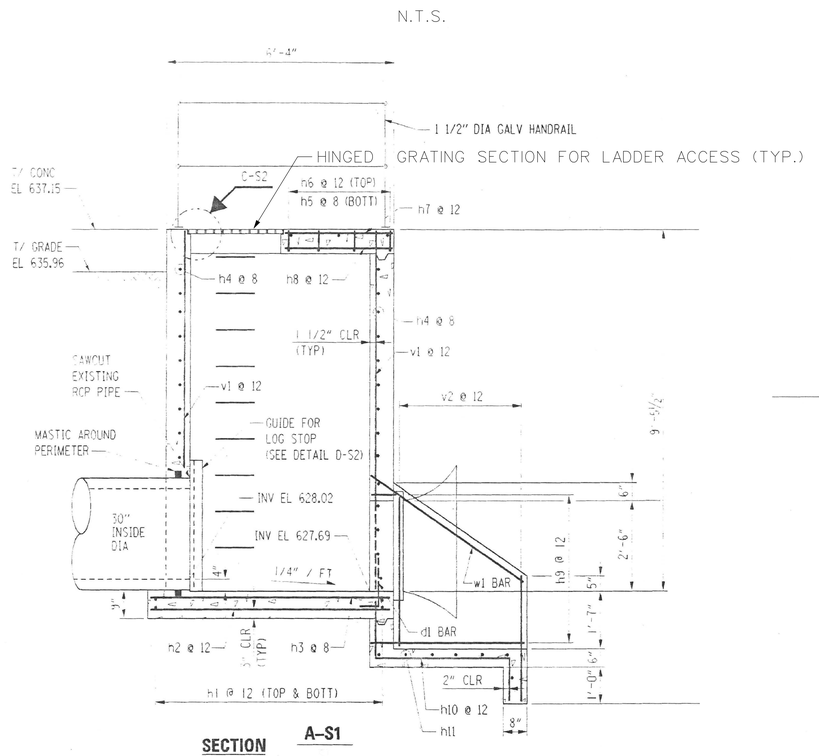

SECTION A-S1

N.T.S.

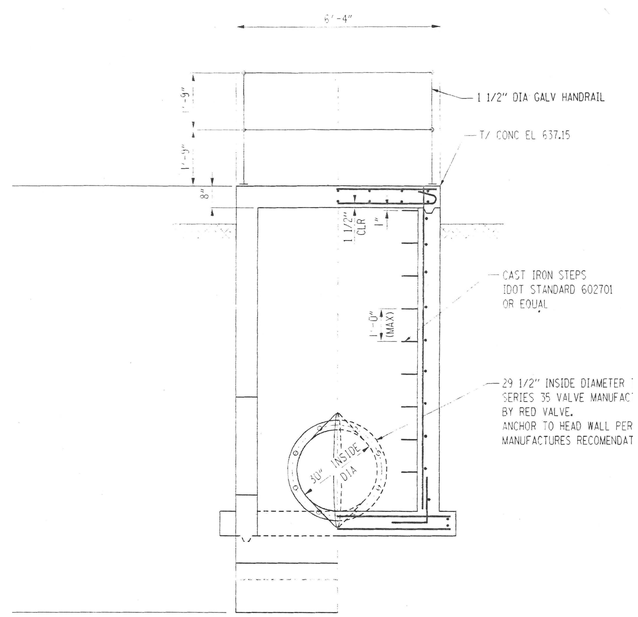

SECTION B-S1

N.T.S.

NOTES:

1. STRUCTURE IS LOCATED AT APPROXIMATELY STA. 266+00, ADJACENT TO CLOSURE #8.
2. SERIES 35 VALVE TO BE REMOVED AND RETURNED TO THE CITY OF PROSPECT HEIGHTS.

US Army Corps of Engineers
Chicago District

SYMBOL	AMENDMENT DESCRIPTION	DATE APPROVED	SYMBOL	DESCRIPTION	DATE APPROVED

DESIGNED BY: L.T. & J.P. | DATE: JULY 2008
DRAWN BY: D.S. | SCALE: AS SHOWN
CHECKED BY: JJS | DRAWING CODE: DESP37-S20.DGN
REVIEWED BY: JJS | SOLICITATION NUMBER: W912P6-08-B-0003

U.S. ARMY ENGINEER DISTRICT
CORPS OF ENGINEERS
CHICAGO, ILLINOIS

DES PLAINES RIVER, ILLINOIS
LOCAL FLOOD PROTECTION
FLOODWALL 37
RIVER RD/MILWAUKEE AVE.
DEMOLITION PLAN FOR
EXISTING SERVICE VAULT
& CLOSURE #8 DETAILS

SHEET REFERENCE NUMBER:
S-20A
SHEET 102 OF 131

PLOT DATE: 8/18/2008
FILENAME: Desp37-S20A.dgn

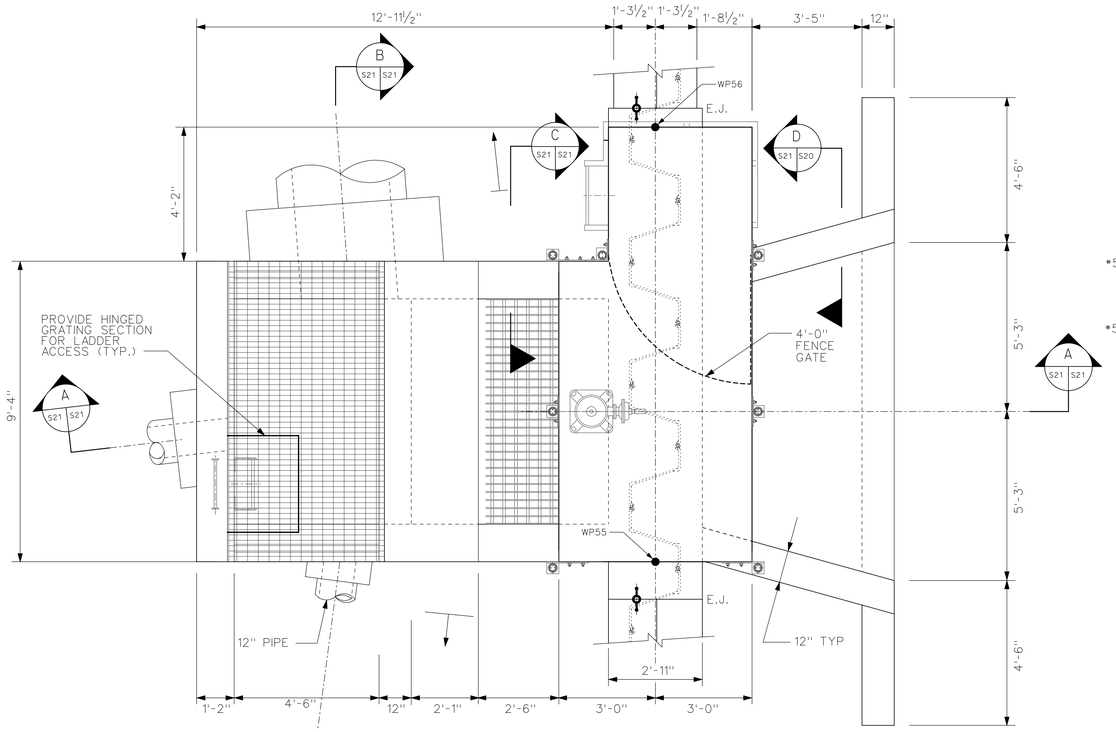

PLAN
SCALE: ½" = 1'-0"

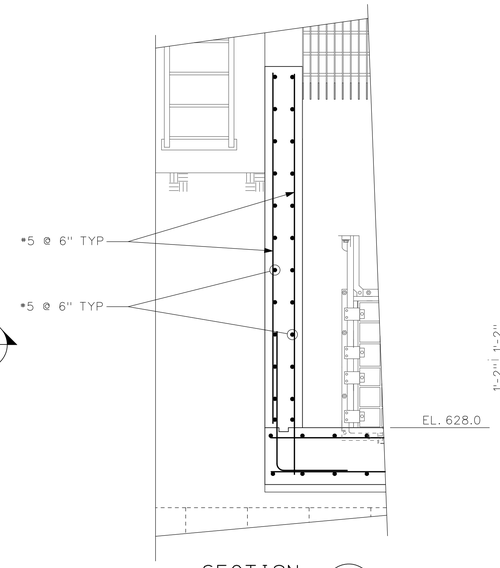

SECTION C
SCALE: ½" = 1'-0"

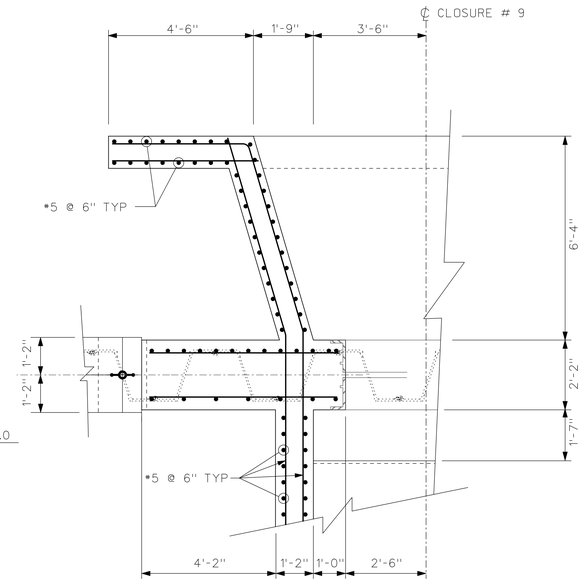

SECTION D
SCALE: ½" = 1'-0"

NOTES:

1. ALL REINFORCING CLEAR COVER SHALL BE 2" TYP ON MEMBERS 12" THICK OR LESS AND SHALL BE 3" TYP ON MEMBERS GREATER THAN 12" THICK UNLESS OTHERWISE NOTED.
2. ALL REINFORCEMENT SHALL BE #5 @ 12" UNLESS OTHERWISE SHOWN.

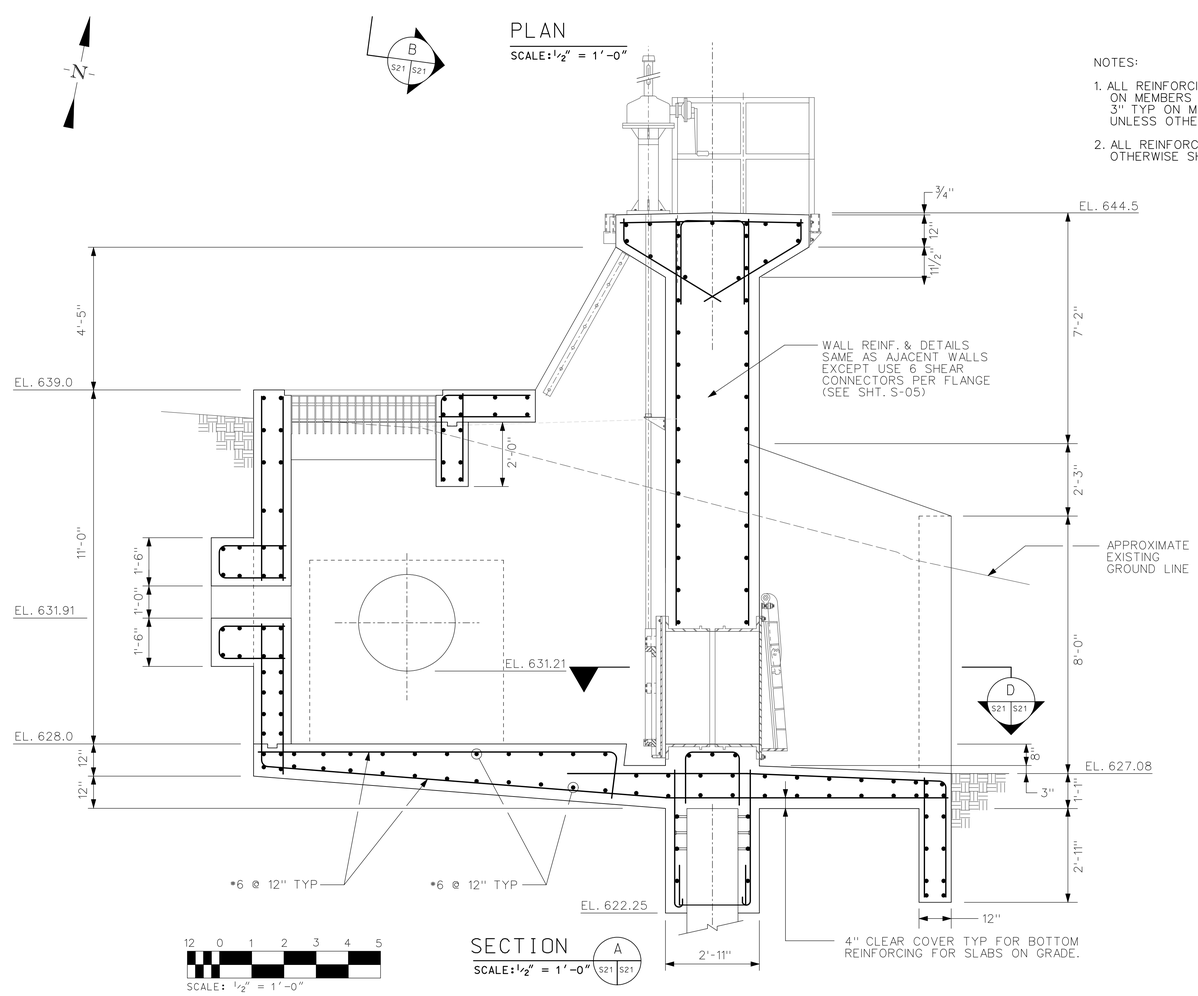

SECTION A
SCALE: ½" = 1'-0"

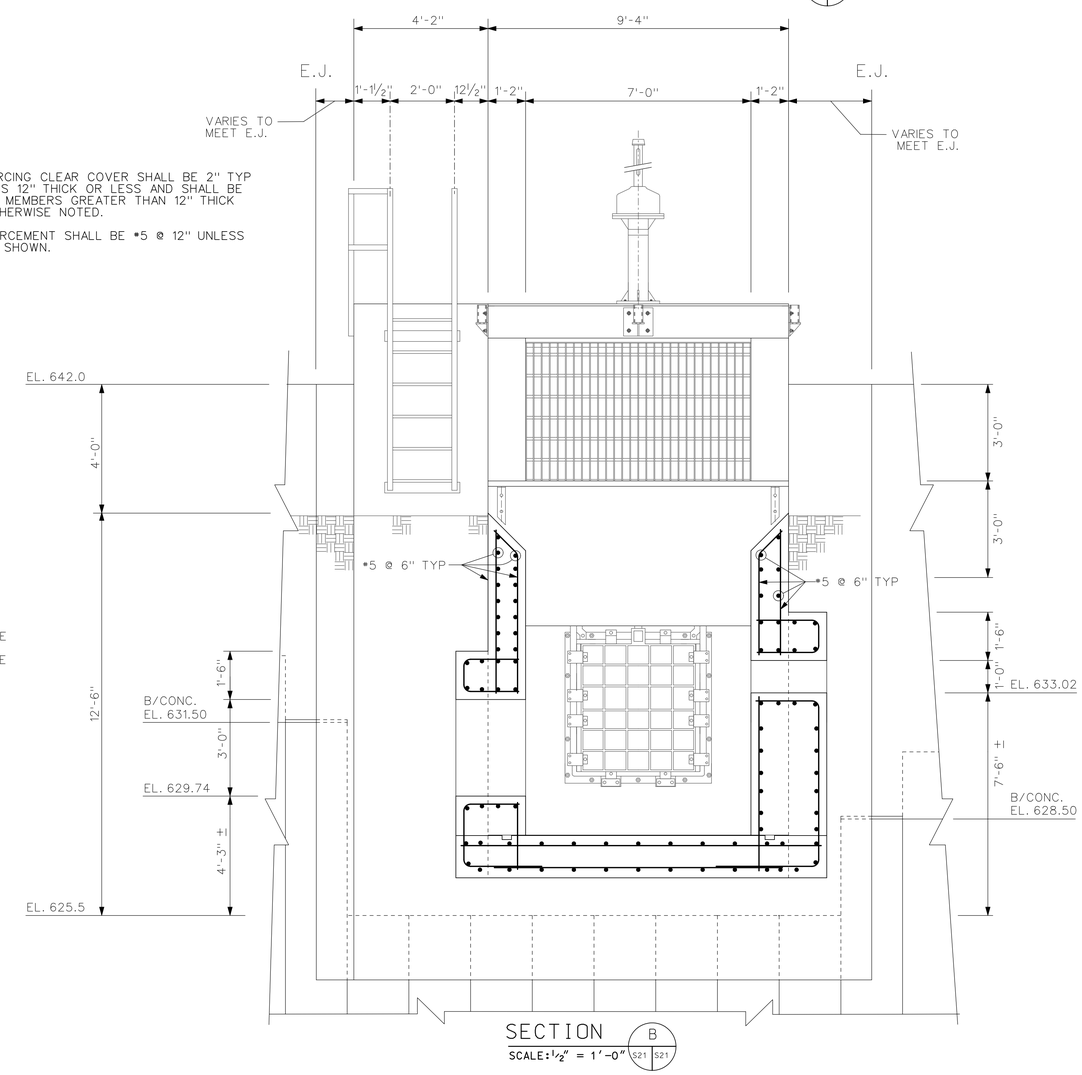

SECTION B
SCALE: ½" = 1'-0"

US Army Corps of Engineers
Chicago District

SYMBOL	AMENDMENT DESCRIPTION	DATE APPROVED	SYMBOL	DESCRIPTION	DATE APPROVED

DESIGNED BY: L.T., J.P.	DATE: 08-18-2008		
DRAWN BY: M.N., D.S.	SCALE: AS SHOWN		
CHECKED BY: J.P.	DRAWING CODE: DESP37-S21.DGN		
REVIEWED BY: S.T.	SOLICITATION NUMBER: W912P6-08-B-0003		

U.S. ARMY ENGINEER DISTRICT
CORPS OF ENGINEERS
CHICAGO, ILLINOIS

DES PLAINES RIVER, ILLINOIS
LOCAL FLOOD PROTECTION
FLOODWALL 37
RIVER RD/MILWAUKEE AVE.
CLOSURE #9
PLAN, ELEVATIONS AND SECTIONS

SHEET REFERENCE NUMBER:
S-21
SHEET 103 OF 131

PLOT DATE: 8/18/2008
FILENAME: Desp37-S21.dgn

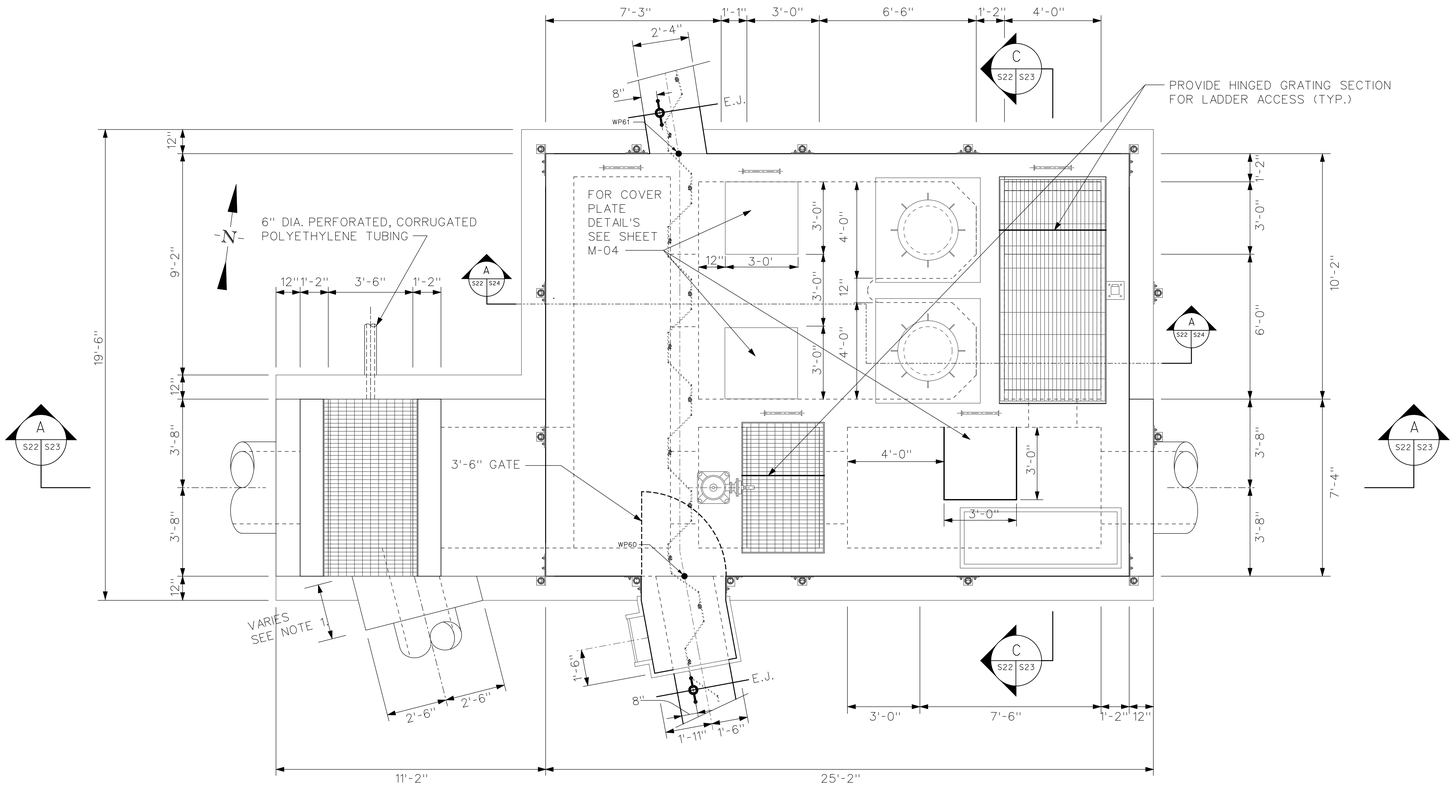

PLAN EL. 642.00

SCALE: 3/8" = 1'-0"

NOTES:

1.PIPE STUBS VARY IN LENGTH TO MEET UP WITH PIPES, FOR LENTHS OF PIPES TO STRUCTURE REFER TO C-37.

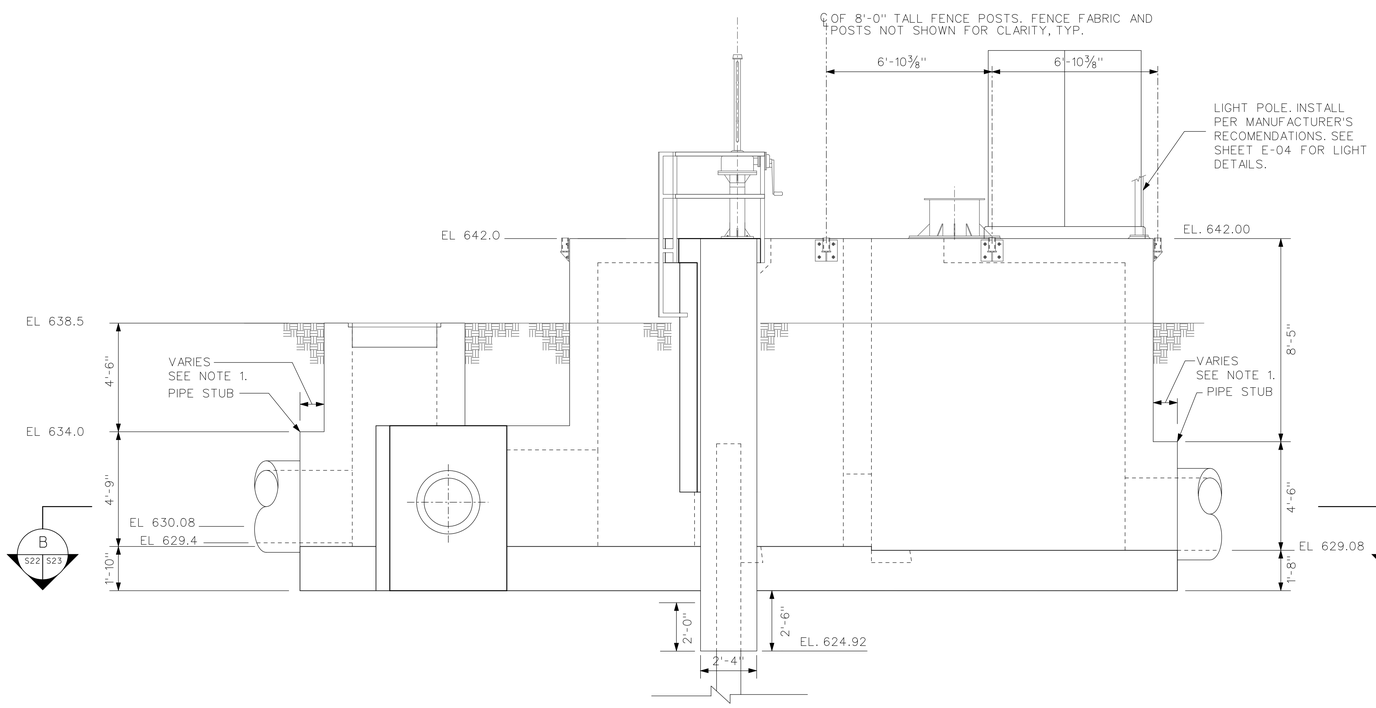

SOUTH ELEVATION

SCALE: 3/8" = 1'-0"

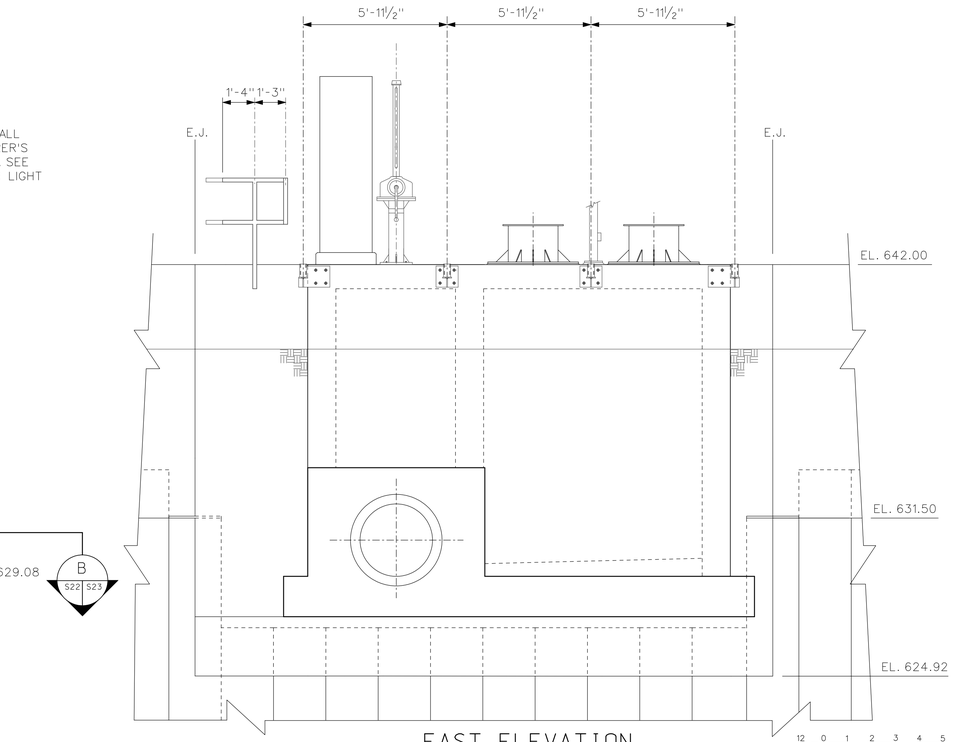

EAST ELEVATION

SCALE: 3/8" = 1'-0"

12 0 1 2 3 4 5

SCALE: 3/8" = 1'-0"

US Army Corps of Engineers Chicago District

SYMBOL	AMENDMENT DESCRIPTION	DATE APPROVED	SYMBOL	DESCRIPTION	DATE APPROVED

DESIGNED BY: EGS | DATE: 08-18-08
DRAWN BY: EGS | SCALE: AS SHOWN
CHECKED BY: JJS | DRAWING CODE: DESP37-S22.DGN
REVIEWED BY: JJS | SOLICITATION NUMBER: W912P6-08-B-0003
FILENAME.DGN

U.S. ARMY ENGINEER DISTRICT
CORPS OF ENGINEERS
CHICAGO, ILLINOIS

DES PLAINES RIVER, ILLINOIS
LOCAL FLOOD PROTECTION
LEVEE 37

PUMP STATION #3 & CLOSURE #10
PLAN AND ELEVATIONS

SHEET REFERENCE NUMBER:

S-22

SHEET 104 OF 131

PLOT DATE: 8/18/2008
FILENAME: Desp37-S22.dgn

NOTES:

1. ALL REINFORCING CLEAR COVER SHALL BE 2" TYP ON MEMBERS 12" THICK OR LESS AND SHALL BE 3" TYP ON MEMBERS GREATER THAN 12" THICK UNLESS OTHERWISE NOTED.
2. ALL REINFORCEMENT SHALL BE #5 @ 12" UNLESS OTHERWISE SHOWN.

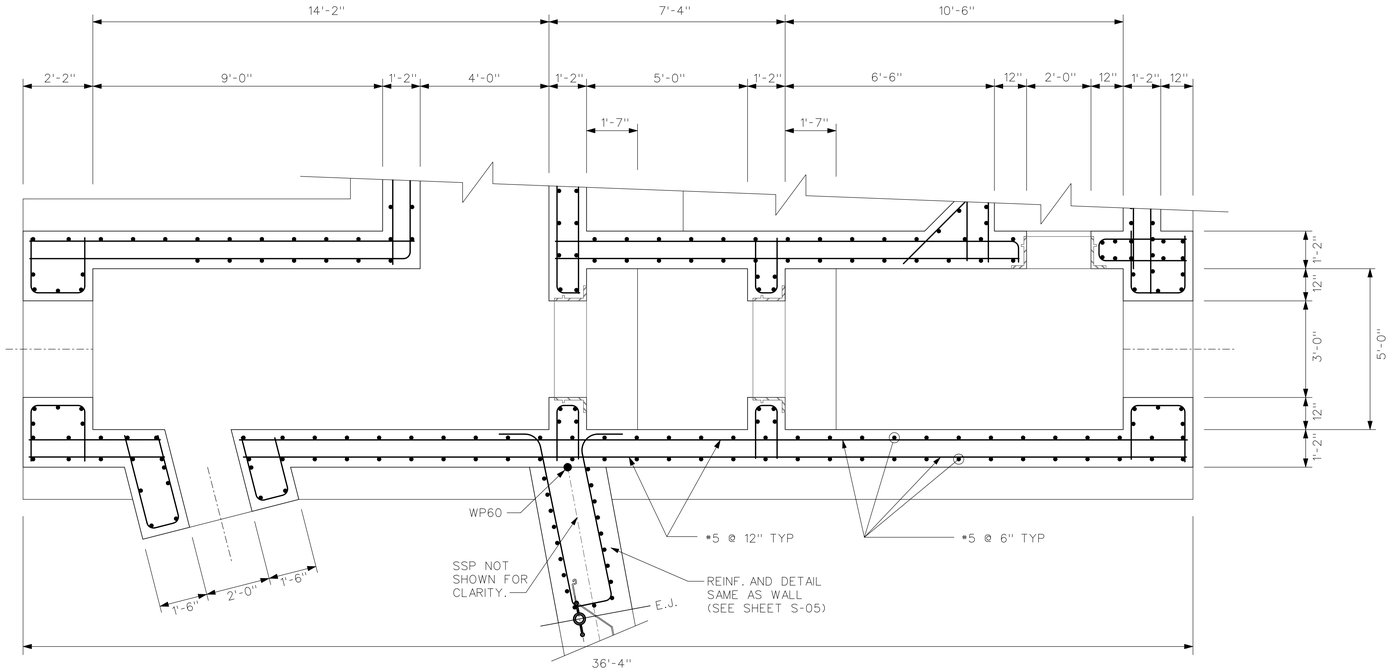

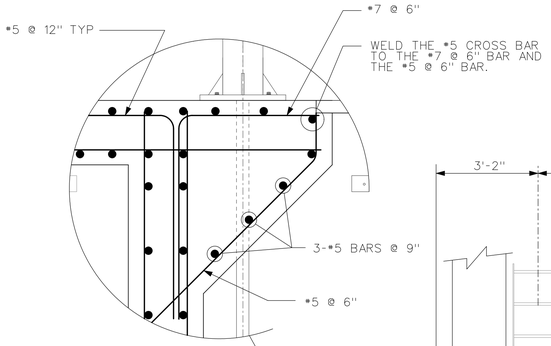

SECTION B (S22 / S23)
SCALE: 1/2" = 1'-0"

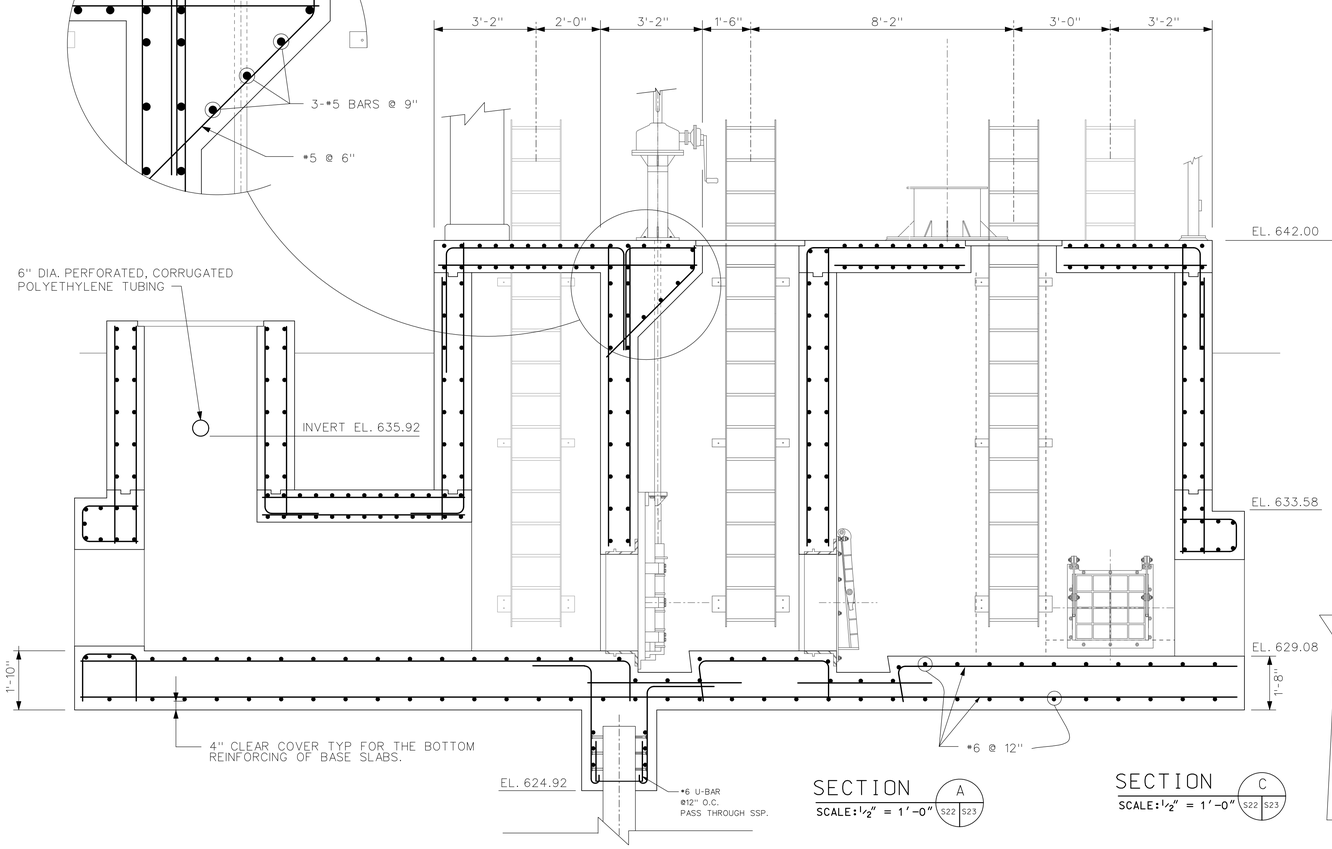

SECTION A (S22 / S23)
SCALE: 1/2" = 1'-0"

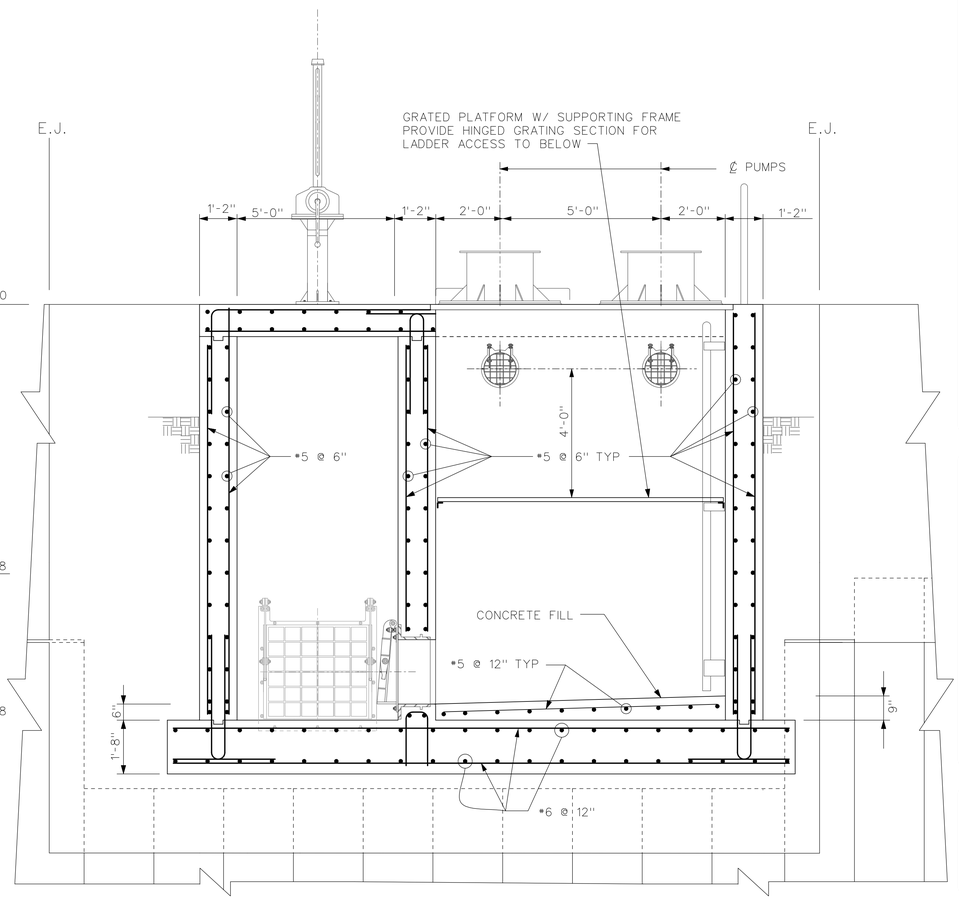

SECTION C (S22 / S23)
SCALE: 1/2" = 1'-0"

US Army Corps of Engineers
Chicago District

SYMBOL	AMENDMENT DESCRIPTION	DATE APPROVED	SYMBOL	DESCRIPTION	DATE APPROVED

DESIGNED BY: L.T., J.P.
DATE: 08-18-2008
DRAWN BY: M.N., D.S.
SCALE: AS SHOWN
CHECKED BY: J.P.
DRAWING CODE: DESP37-S23.DGN
REVIEWED BY: S.T.
SOLICITATION NUMBER: W912P6-08-B-0003

U.S. ARMY ENGINEER DISTRICT
CORPS OF ENGINEERS
CHICAGO, ILLINOIS

DES PLAINES RIVER, ILLINOIS
LOCAL FLOOD PROTECTION
FLOODWALL 37
RIVER RD/MILWAUKEE AVE.
PUMP STATION #3 & CLOSURE #10
BOX SECTIONS

SHEET REFERENCE NUMBER:
S-23
SHEET 105 OF 131

PLOT DATE: 8/18/2008
FILENAME: Desp37-S23.dgn

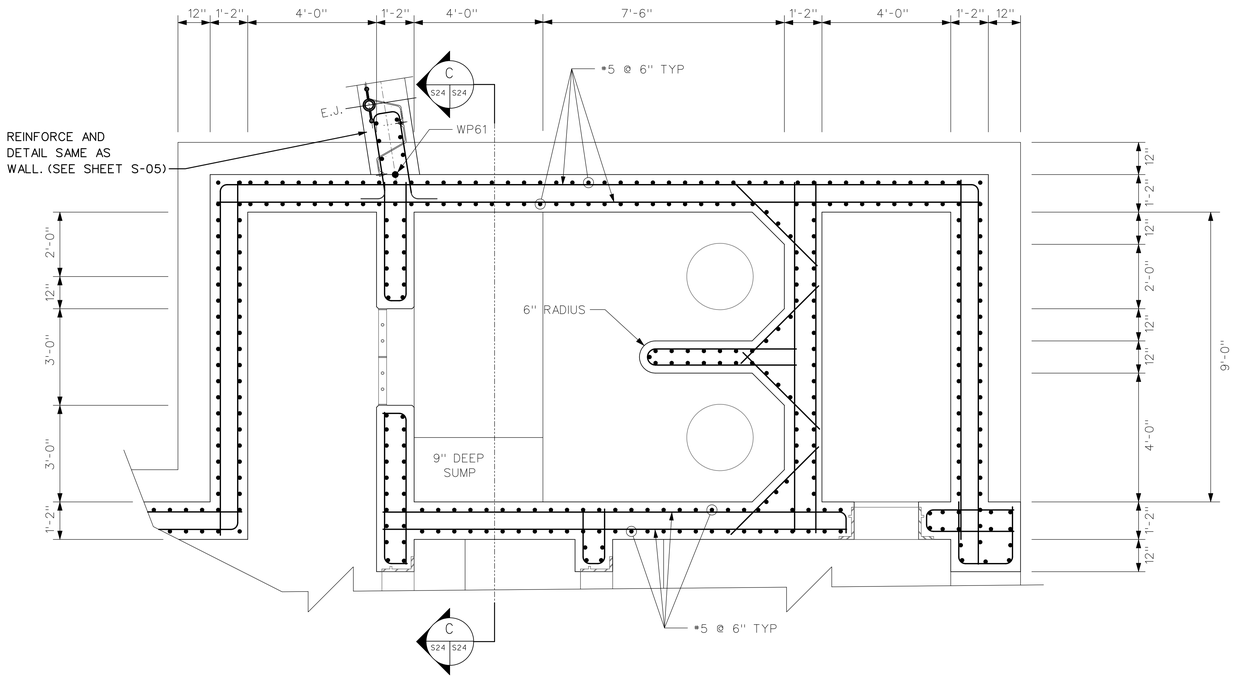

SECTION B S24 S24
SCALE: 1/2" = 1'-0"

NOTES:

1. ALL REINFORCING CLEAR COVER SHALL BE 2" TYP ON MEMBERS 12" THICK OR LESS AND SHALL BE 3" TYP ON MEMBERS GREATER THAN 12" THICK UNLESS OTHERWISE NOTED.

2. ALL REINFORCEMENT SHALL BE #5 @ 12" UNLESS OTHERWISE SHOWN.

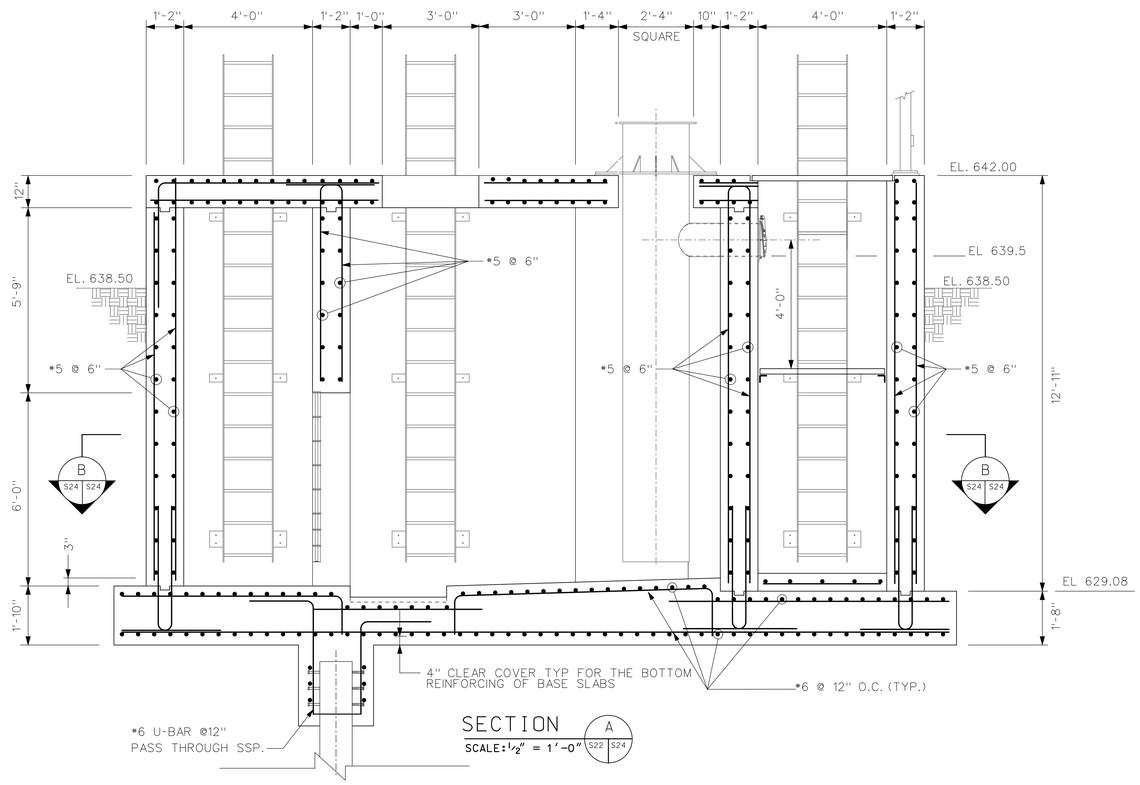

SECTION A S22 S24
SCALE: 1/2" = 1'-0"

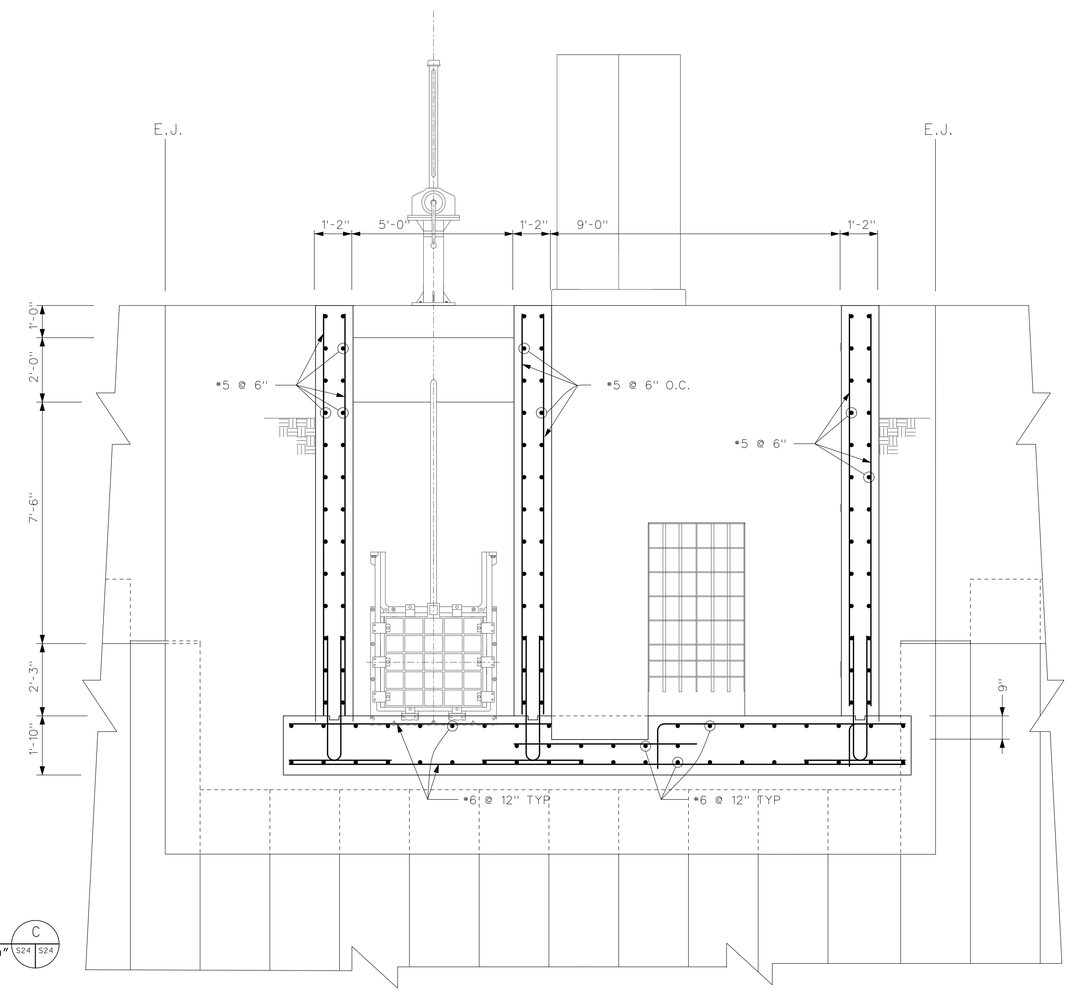

SECTION C S24 S24
SCALE: 1/2" = 1'-0"

US Army Corps of Engineers
Chicago District

SYMBOL	AMENDMENT DESCRIPTION	DATE APPROVED	SYMBOL	DESCRIPTION	DATE APPROVED

DESIGNED BY: L.T. J.P.
DRAWN BY: M.N. D.S.
CHECKED BY: J.P.
REVIEWED BY: S.T.
DATE: 08-18-2008
SCALE: AS SHOWN
DRAWING CODE: DESP37-S24.DGN
SOLICITATION NUMBER: W912P6-08-B-0003

U.S. ARMY ENGINEER DISTRICT
CORPS OF ENGINEERS
CHICAGO, ILLINOIS

DES PLAINES RIVER, ILLINOIS
LOCAL FLOOD PROTECTION
FLOODWALL 37
RIVER RD/MILWAUKEE AVE.
PUMP STATION #3 & CLOSURE #10
PUMP STATION SECTIONS

SHEET REFERENCE NUMBER:
S-24
SHEET 106 OF 131

PLOT DATE: 8/18/2008
FILENAME: Desp37-S24.dgn

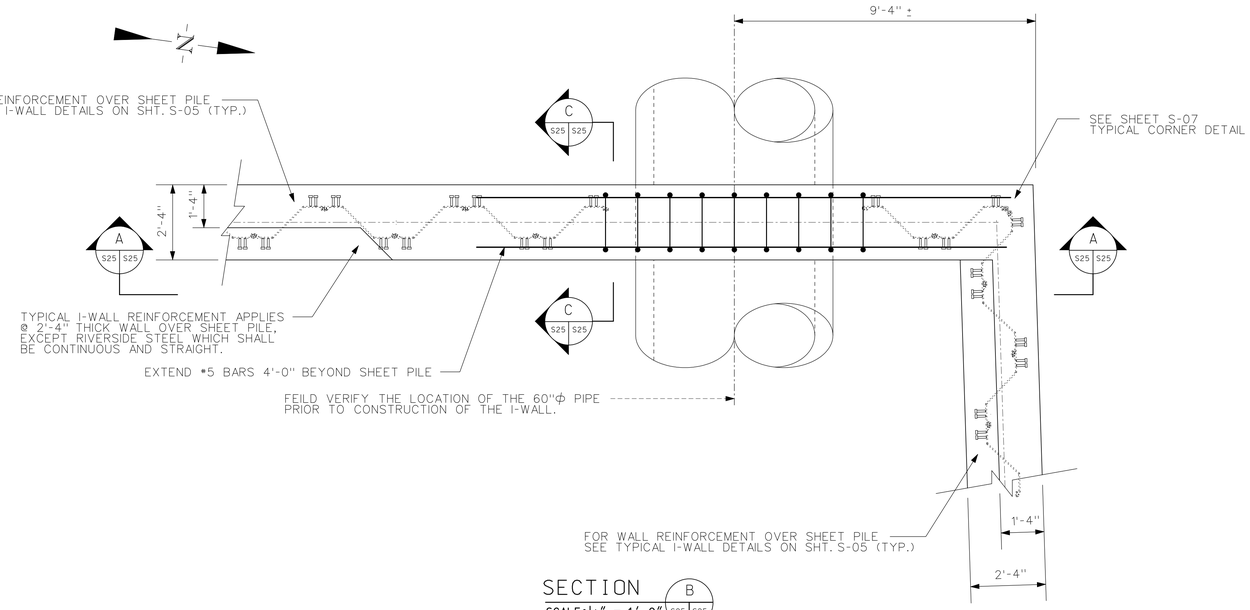

SECTION B S25 S25
SCALE: 1/2" = 1'-0"

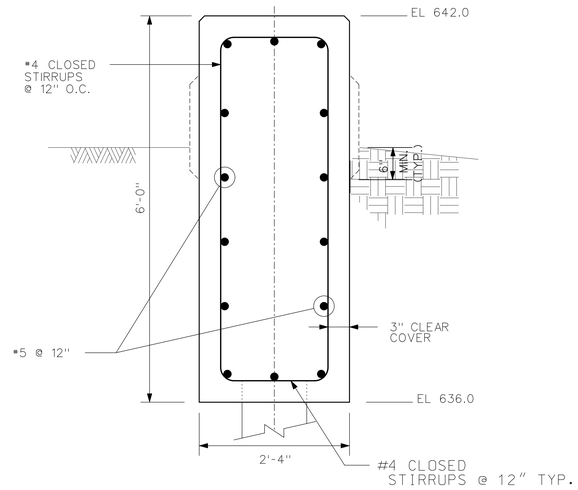

SECTION C S25 S25
SCALE: 1" = 1'-0"

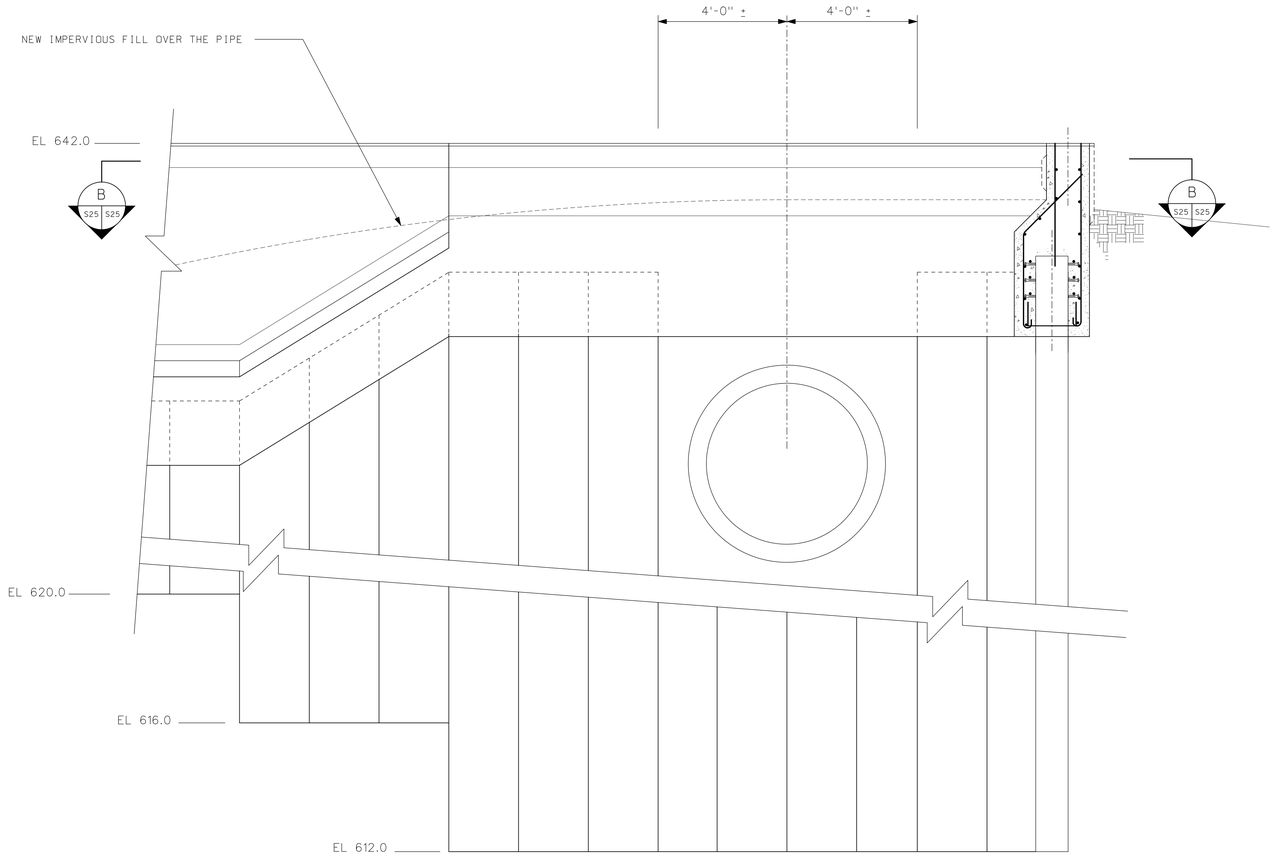

SECTION A S25 S25
SCALE: 1/2" = 1'-0"

SCALE: 1" = 1'-0"

NOTES:

1. ALL REINFORCING CLEAR COVER SHALL BE 2" TYP ON MEMBERS 12" THICK OR LESS AND SHALL BE 3" TYP ON MEMBERS GREATER THAN 12" THICK UNLESS OTHERWISE NOTED.

2. SEE SHEET C-37A FOR UTILITY RELOCATION & BACKFILL REQUIREMENTS.

US Army Corps of Engineers
Chicago District

SYMBOL	AMENDMENT DESCRIPTION	DATE APPROVED	SYMBOL	DESCRIPTION	DATE APPROVED

DESIGNED BY: L.T., J.P. | DATE: 08-18-2008
DRAWN BY: M.N., D.S. | SCALE: AS SHOWN
CHECKED BY: J.P. | DRAWING CODE: DESP37-S25.DGN
REVIEWED BY: S.T. | SOLICITATION NUMBER: W912P6-08-B-0003

U.S. ARMY ENGINEER DISTRICT
CORPS OF ENGINEERS
CHICAGO, ILLINOIS

DES PLAINES RIVER, ILLINOIS
LOCAL FLOOD PROTECTION
FLOODWALL 37
RIVER RD/MILWAUKEE AVE.
INDOT PUMP STATION
PIPE PASSING

SHEET REFERENCE NUMBER:
S-25
SHEET 107 OF 131

PLOT DATE: 8/18/2008
FILENAME: Desp37-S25.dgn

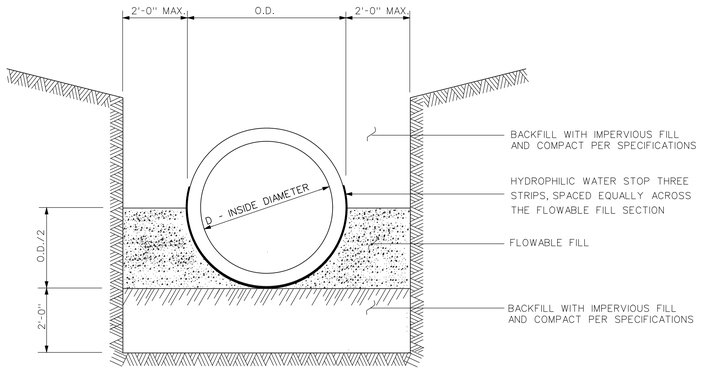

TYPICAL DETAIL OF PIPE PASSING BELOW INPERVIOUS FILL

SCALE: 1/2" = 1'-0"

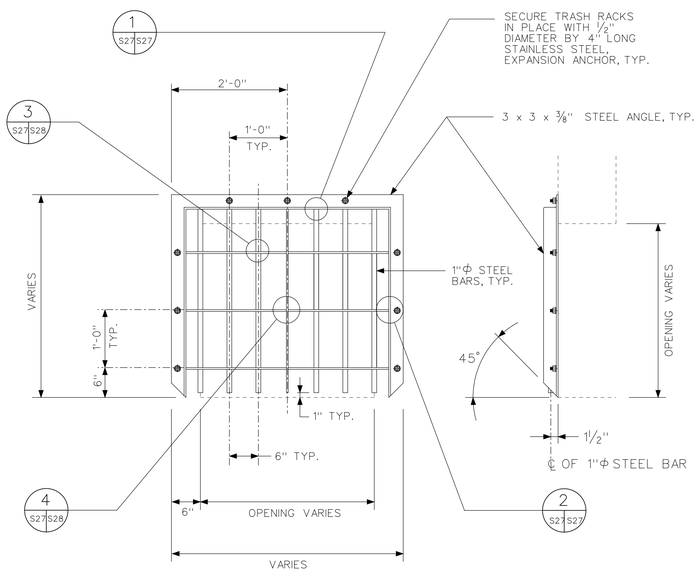

GATEWELL TRASH RACK DETAILS

NTS

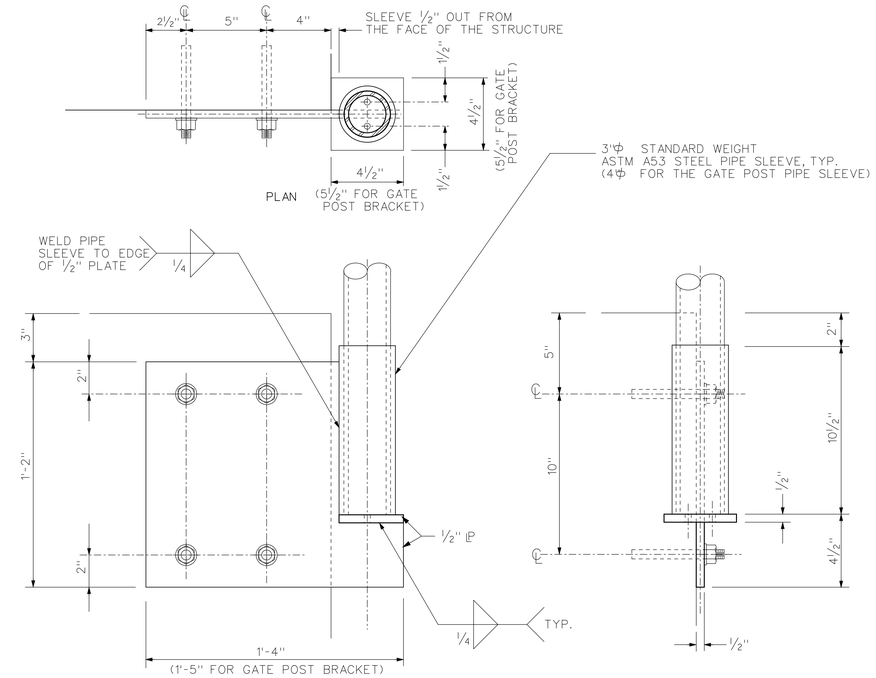

SIDE FENCE BRACKET

SCALE: 1 1/2" = 1'-0"

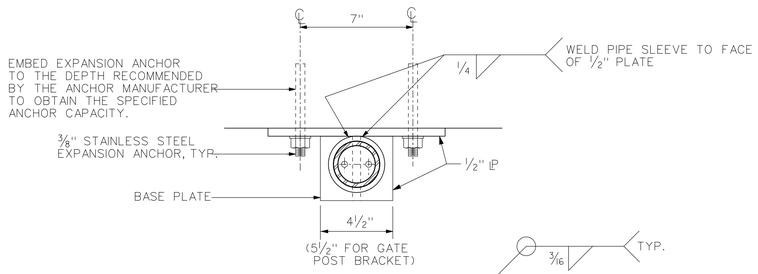

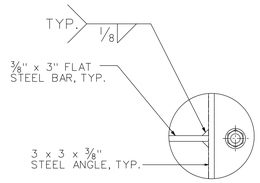

SIDE BAR DETAIL 2 (S27 S27)

NTS

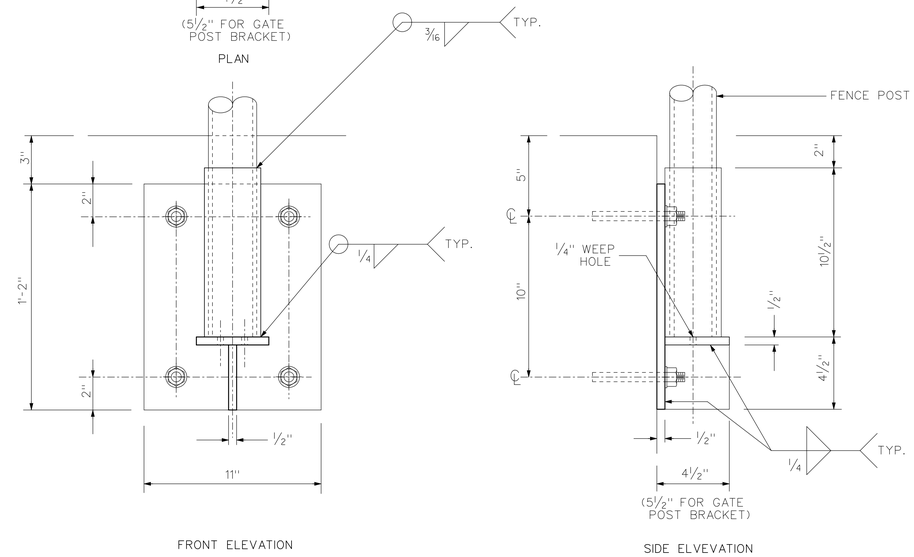

FACE FENCE BRACKET

SCALE: 1 1/2" = 1'-0"

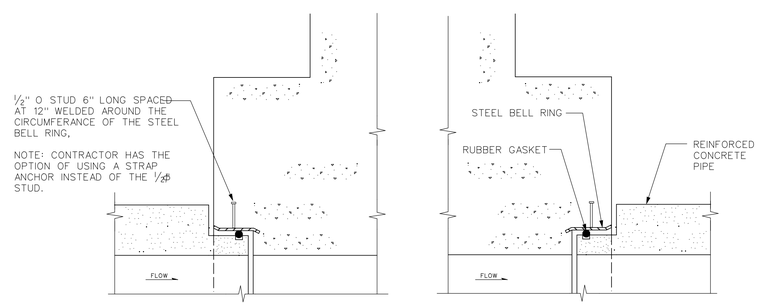

NOTE: THE CONTRACTOR HAS THE OPTION OF CASTING THE END SECTION OF A PIECE OF CONCRETE PIPE WITH A BUILT IN STEEL BELL RING INSTEAD OF CASTING IN THE STEEL BELL RING AND STUDS AS SHOWN.

PIPE CONNECTION AT WALLS

NOT TO SCALE

NOTES:

1. THE TOP OF THE FENCE SHALL BE 8'-0" ABOVE THE TOP OF THE STRUCTURE.
2. ALL FENCE POST, EXCEPT FOR THE TWO GATE FENCE POSTS, SHALL BE 2 1/2 " DIAMETER STANDARD WEIGHT STEEL PIPE CONFORMING TO ASTM A53 GRADE B.
3. GATE POSTS SHALL BE 3 1/2 " DIAMETER STANDARD WEIGHT STEEL PIPE CONFORMING TO ASTM A53 GRADE B.
4. THE PIPE SLEEVE FOR THE GATE POSTS SHALL BE 4" DIAMETER STANDARD WEIGHT STEEL PIPE CONFORMING TO ASTM A53 GRADE B.
5. ALL GATE PARTS, EXCEPT FOR THE EXPANSION ANCHORS SHALL BE HOT-DIPPED GALVANIZED, AFTER FABRICATION.
6. ALL STEEL PLATE USED TO FABRICATE THE FENCE BRACKETS SHALL BE ASTM A36.
7. ALL GATE COMPONENTS SHALL CONFORM TO SPECIFICATION SECTION 02821 EXCEPT AS MODIFIED ON THESE DRAWINGS.

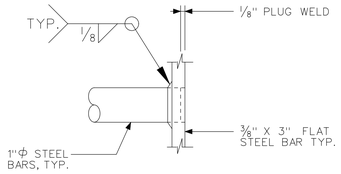

EXTERIOR BAR DETAIL 1 (S27 S27)

NTS

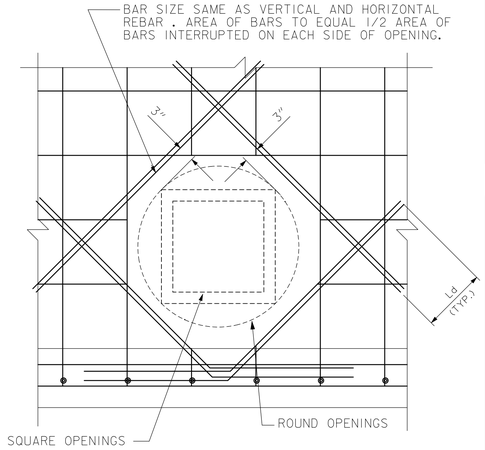

TYP. REINFORCING AT OPENINGS

NTS

TYPICAL FOR WALLS, FLOORS & ROOFS (REINFORCEMENT FOR BOTH FACES OR TOP AND BOTTOM)

12" 0' 1' 2' 3' 4' 5'

SCALE: 1/2" = 1'-0"

US Army Corps of Engineers
Chicago District

SYMBOL	AMENDMENT DESCRIPTION	DATE APPROVED	SYMBOL	DESCRIPTION	DATE APPROVED

DESIGNED BY: L.T., J.P. | DATE: 08-18-2008
DRAWN BY: M.N., D.S. | SCALE: AS SHOWN
CHECKED BY: J.P. | DRAWING CODE: DESP37-S27.DGN
REVIEWED BY: S.T. | SOLICITATION NUMBER: W912P6-08-B-0003

U.S. ARMY ENGINEER DISTRICT
CORPS OF ENGINEERS
CHICAGO, ILLINOIS

DES PLAINES RIVER, ILLINOIS
LOCAL FLOOD PROTECTION
FLOODWALL 37
RIVER RD/MILWAUKEE AVE.

MISCELLANEOUS DETAILS

SHEET REFERENCE NUMBER:
S-27
SHEET 109 OF 131

PLOT DATE: 8/18/2008
FILENAME: Desp37-S27.DGN

GENERAL CONCRETE NOTES:

1. TOP BARS ARE HORIZONTAL BARS IN THE TOP FACE LAYER(S) OF BEAMS AND SLABS, SO PLACED THAT MORE THAN 12 INCHES OF FRESH CONCRETE IS CAST BELOW THE DEVELOPMENT LENGTH OR SPLICE. ALL OTHER HORIZONTAL AND VERTICAL BARS IN BEAMS, SLABS, COLUMNS AND WALLS SHALL BE CLASSIFIED AS OTHER BARS, UNLESS OTHERWISE NOTED ON THE DRAWINGS.
2. LAP SPLICES SHALL NOT BE USED IN LOCATION OF MAXIMUM MOMENTS UNLESS OTHERWISE PERMITTED ON THE DRAWINGS.
3. REINFORCEMENT SHALL HAVE A MINIMUM CONCRETE COVER OF 3", EXCEPT AS OTHERWISE NOTED OR SHOWN ON THE DRAWINGS.
4. ALL EXPOSED CONCRETE EDGES SHALL HAVE A ¾" CHAMFER.
5. ABBREVIATIONS: d_b BAR DIAMETER; ldh - DEVELOPMENT LENGTH WITH HOOK
6. ALL DETAILING OF REINFORCEMENT SHALL BE IAW ACI 318, UNLESS NOTED OTHERWISE.

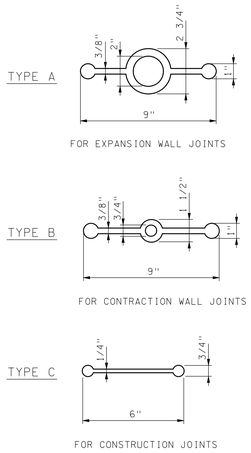

WATERSTOP DETAILS
SCALE : 3" = 1'-0"

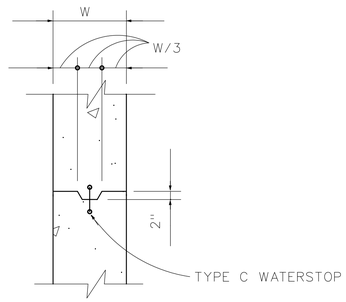

TYPICAL KEYED CONSTRUCTION JOINT
N.T.S.

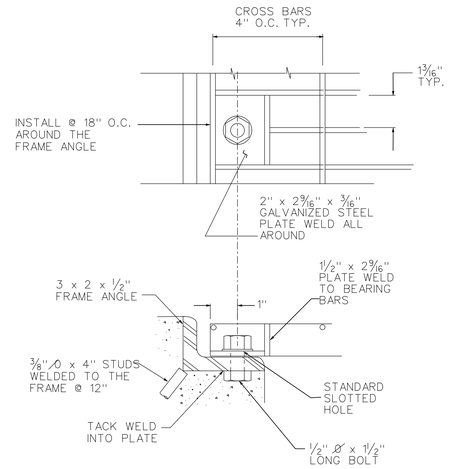

STEEL GRATING DETAILS
N.T.S.

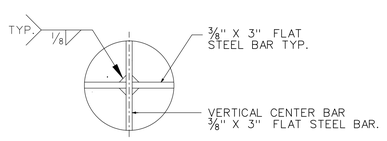

CENTER BAR DETAIL (4)
N.T.S.

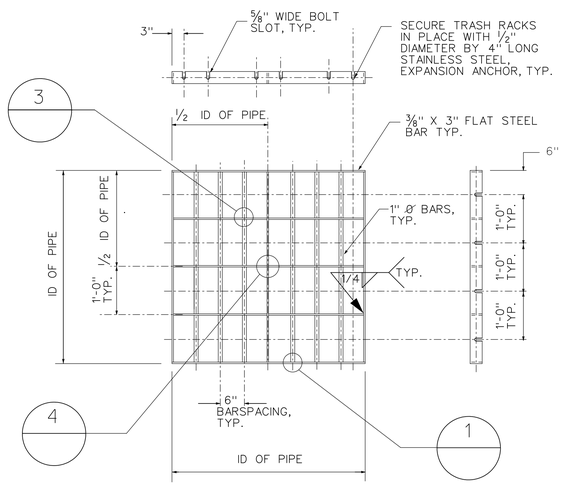

TRASH RACK DETAILS
SCALE: ¾" = 1'-0"

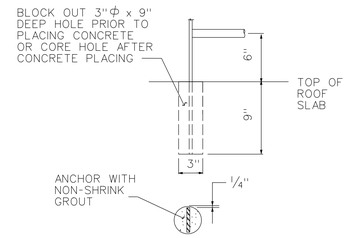

GRAB BAR ANCHORAGE DETAIL (2)
N.T.S.

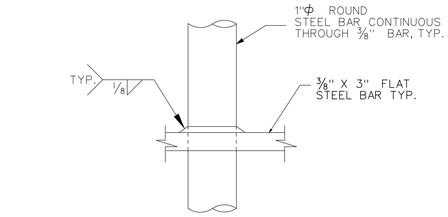

INTERIOR BAR DETAIL (3)
N.T.S.

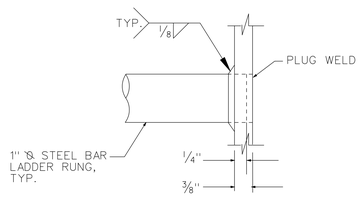

RUNG AND BAR DETAIL (1)
N.T.S.

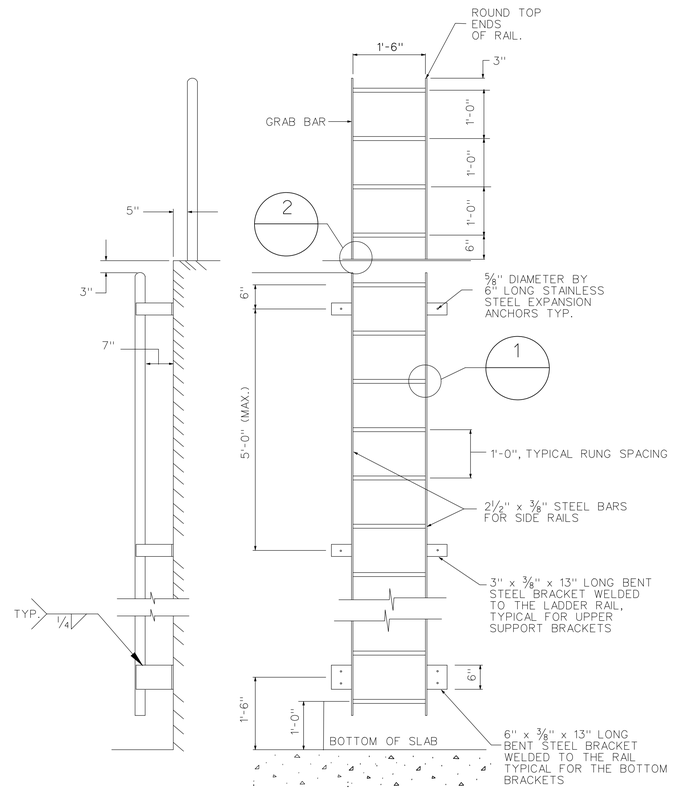

LADDER DETAILS
SCALE: ¾" = 1'-0"

12" 0' 1' 2' 3' 4' 5'
SCALE: ¾" = 1'-0"

US Army Corps of Engineers
Chicago District

SYMBOL	AMENDMENT DESCRIPTION	DATE APPROVED	SYMBOL	DESCRIPTION	DATE APPROVED

DESIGNED BY: L.T., J.P.	DATE: 08-18-2008		
DRAWN BY: M.N., D.S.	SCALE: AS SHOWN		
CHECKED BY: J.P.	DRAWING CODE: DESP37-S28.DGN		
REVIEWED BY: S.T.	SOLICITATION NUMBER: W912P6-08-B-0003		

U.S. ARMY ENGINEER DISTRICT
CORPS OF ENGINEERS
CHICAGO, ILLINOIS

DES PLAINES RIVER, ILLINOIS
LOCAL FLOOD PROTECTION
FLOODWALL 37
RIVER RD/MILWAUKEE AVE.

STANDARD DETAILS

SHEET REFERENCE NUMBER:
S-28
SHEET 110 OF 131

PLOT DATE: 8/18/2008
FILENAME: Desp37-S28.DGN

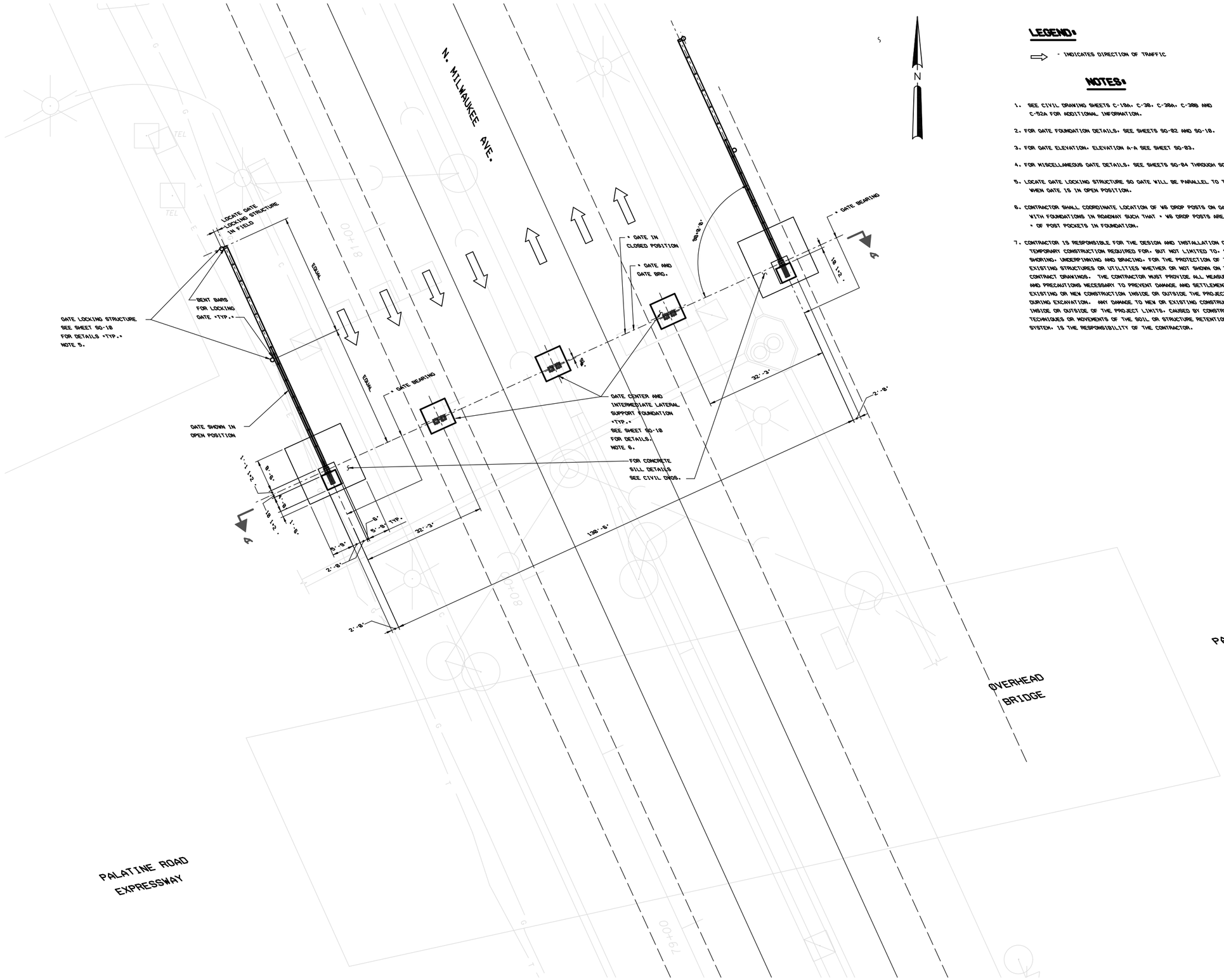

PLAN AT MILWAUKEE AVE. FLOOD GATE CLOSURE STRUCTURE

0 5' 10' 20'

SCALE: 3/32"=1'

LEGEND:

⇨ - INDICATES DIRECTION OF TRAFFIC

NOTES:

1. SEE CIVIL DRAWING SHEETS C-19A, C-38, C-38A, C-38B AND C-52A FOR ADDITIONAL INFORMATION.
2. FOR GATE FOUNDATION DETAILS, SEE SHEETS SG-02 AND SG-18.
3. FOR GATE ELEVATION, ELEVATION A-A SEE SHEET SG-03.
4. FOR MISCELLANEOUS GATE DETAILS, SEE SHEETS SG-04 THROUGH SG-09.
5. LOCATE GATE LOCKING STRUCTURE SO GATE WILL BE PARALLEL TO THE CURB WHEN GATE IS IN OPEN POSITION.
6. CONTRACTOR SHALL COORDINATE LOCATION OF W8 DROP POSTS ON GATE WITH FOUNDATIONS IN ROADWAY SUCH THAT * W8 DROP POSTS ARE AT * OF POST POCKETS IN FOUNDATION.
7. CONTRACTOR IS RESPONSIBLE FOR THE DESIGN AND INSTALLATION OF ALL TEMPORARY CONSTRUCTION REQUIRED FOR, BUT NOT LIMITED TO, SHEETING, SHORING, UNDERPINNING AND BRACING, FOR THE PROTECTION OF THE EXISTING STRUCTURES OR UTILITIES WHETHER OR NOT SHOWN ON THE CONTRACT DRAWINGS. THE CONTRACTOR MUST PROVIDE ALL MEASURES AND PRECAUTIONS NECESSARY TO PREVENT DAMAGE AND SETTLEMENT OF EXISTING OR NEW CONSTRUCTION INSIDE OR OUTSIDE THE PROJECT LIMITS DURING EXCAVATION. ANY DAMAGE TO NEW OR EXISTING CONSTRUCTION INSIDE OR OUTSIDE OF THE PROJECT LIMITS, CAUSED BY CONSTRUCTION TECHNIQUES OR MOVEMENTS OF THE SOIL OR STRUCTURE RETENTION SYSTEM, IS THE RESPONSIBILITY OF THE CONTRACTOR.

US ARMY CORPS OF ENGINEERS
Chicago District

SYMBOL	AMENDMENT DESCRIPTION	DATE	APPROVED SYMBOL	DESCRIPTION	DATE APPROVED

DESIGNED BY: AAG | DATE: 08-18-2008
DRAWN BY: CHD | SCALE: AS SHOWN
CHECKED BY: DPV | CONTRACT NUMBER: W912P6-08-B-0003
SUBMITTED BY: | DATE:

U.S. ARMY ENGINEER DISTRICT
CORPS OF ENGINEERS
CHICAGO, ILLINOIS

CTE | AECOM
303 East Wacker Drive, Suite 600, Chicago, Illinois 60601-5278
T 312.373.6000 F 312.373.6799 www.aecom.com

DES PLAINES RIVER, ILLINOIS
LOCAL FLOOD PROTECTION
FLOODWALL 37
RIVER RD/MILWAUKEE AVE.
MILWAUKEE AVENUE FLOOD GATE
CLOSURE STRUCTURE
GENERAL PLAN

SHEET REFERENCE NUMBER:
SG-01
SHEET 111 OF 131

PLOT DATE: 8/18/2008
FILENAME: $FILE$

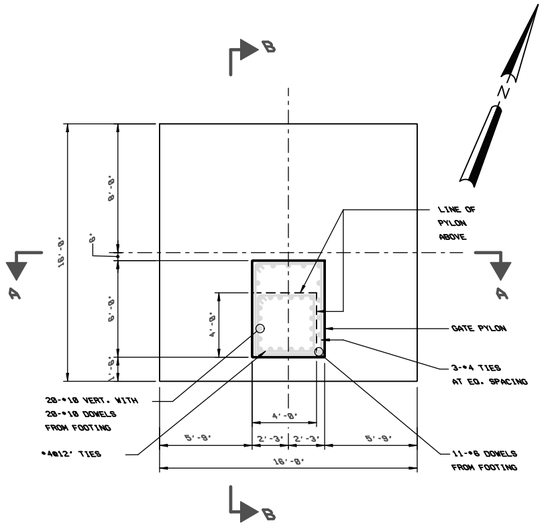

GATE PYLON FOUNDATION PLAN

"WEST PYLON - SHOWN"

"EAST PYLON - OPPOSITE HAND"

0 2' 4' 8'

SCALE:1/4"=1'

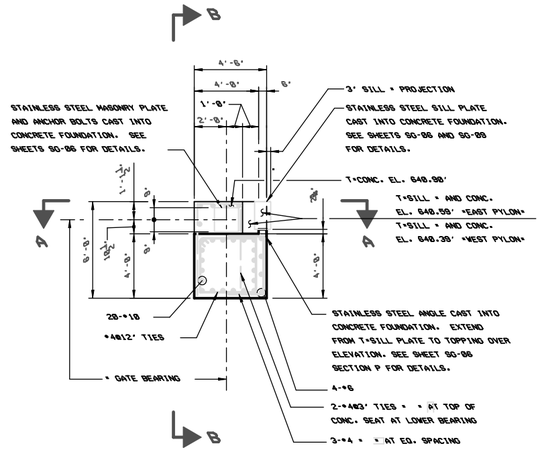

GATE PYLON PLAN AT EL. 648.98

"WEST PYLON - SHOWN"

"EAST PYLON - OPPOSITE HAND"

0 2' 4' 8'

SCALE:1/4"=1'

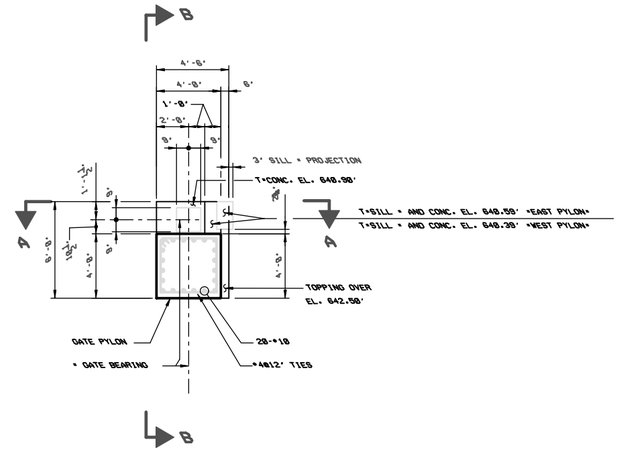

GATE PYLON PLAN AT EL. 642.58'

"WEST PYLON - SHOWN"

"EAST PYLON - OPPOSITE HAND"

0 2' 4' 8'

SCALE:1/4"=1'

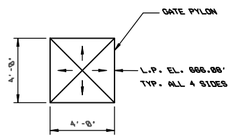

GATE PYLON TOP PLAN

0 2' 4' 8'

SCALE:1/4"=1'

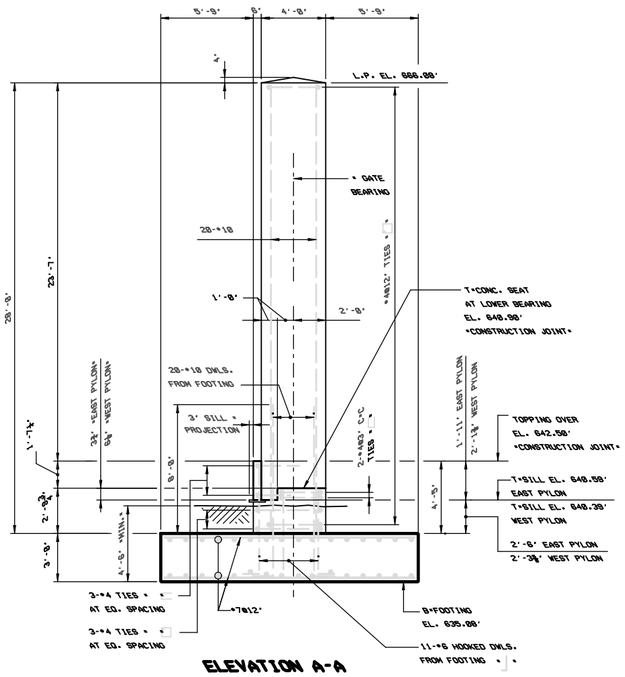

ELEVATION A-A

0 2' 4' 8'

SCALE:1/4"=1'

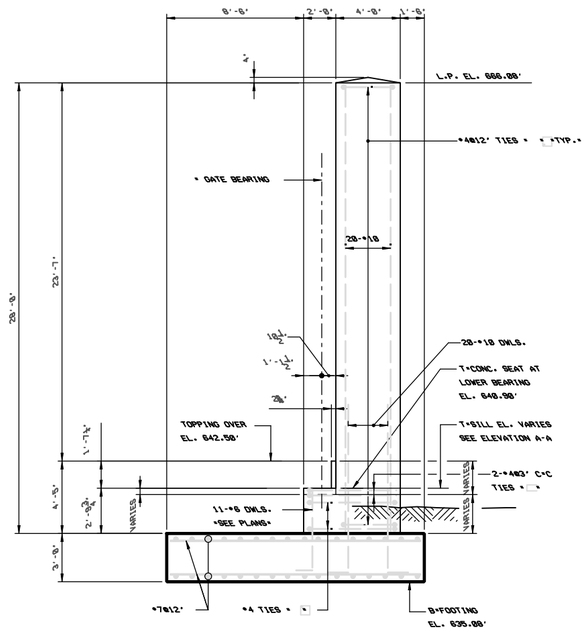

ELEVATION B-B

0 2' 4' 8'

SCALE:1/4"=1'

NOTES:

1. ASSUMED NET DESIGN SOIL BEARING PRESSURE - 2000 PSF VERIFY IN FIELD WITH INDEPENDENT GEOTECHNICAL ENGINEER.

2. IF EXCAVATION FOR FOOTINGS ENCOUNTER GRANULAR MATERIAL, OVERCUT EXCAVATION ONE FOOT AND BACKFILL WITH LOW PLASTICITY SILTY CLAY PLACED IN 9" LOOSE LAYERS AND COMPACTED TO 98% ASTM D1557.

3. FOR SIZE AND LOCATION OF POCKET IN TOP OF FOUNDATION FOR SHEAR LUGS WELDED TO MASONRY PLATE SEE SHEET SG-06.

4. ALL REINFORCING BARS THIS SHEET SHALL BE EPOXY COATED.

5. ALL DIMENSIONS AND ELEVATIONS MUST BE VERIFIED IN FIELD BY CONTRACTOR PRIOR TO FABRICATION OF MATERIALS FOR GATE AND GATE FOUNDATIONS.

US ARMY CORPS OF ENGINEERS
Chicago District

SYMBOL	AMENDMENT DESCRIPTION	DATE APPROVED SYMBOL	DESCRIPTION	DATE APPROVED

DESIGNED BY: AAG | DATE: 08-18-2008
DRAWN BY: CHD | SCALE: AS SHOWN
CHECKED BY: DPV | CONTRACT NUMBER: W912P6-08-B-0003
SUBMITTED BY: | DATE:

U.S. ARMY ENGINEER DISTRICT
CORPS OF ENGINEERS
CHICAGO, ILLINOIS

CTE AECOM
303 East Wacker Drive, Suite 600, Chicago, Illinois 60601-5278
T 312.373.6000 F 312.373.7159 www.aecom.com

DES PLAINES RIVER, ILLINOIS
LOCAL FLOOD PROTECTION
FLOODWALL 37
RIVER RD/MILWAUKEE AVE.
MILWAUKEE AVENUE FLOOD GATE
CLOSURE STRUCTURE FOUNDATIONS,
PLANS AND ELEVATIONS

SHEET REFERENCE NUMBER:
SG-02
SHEET 112 OF 131

PLOT DATE: 8/18/2008
FILENAME: IFILE1

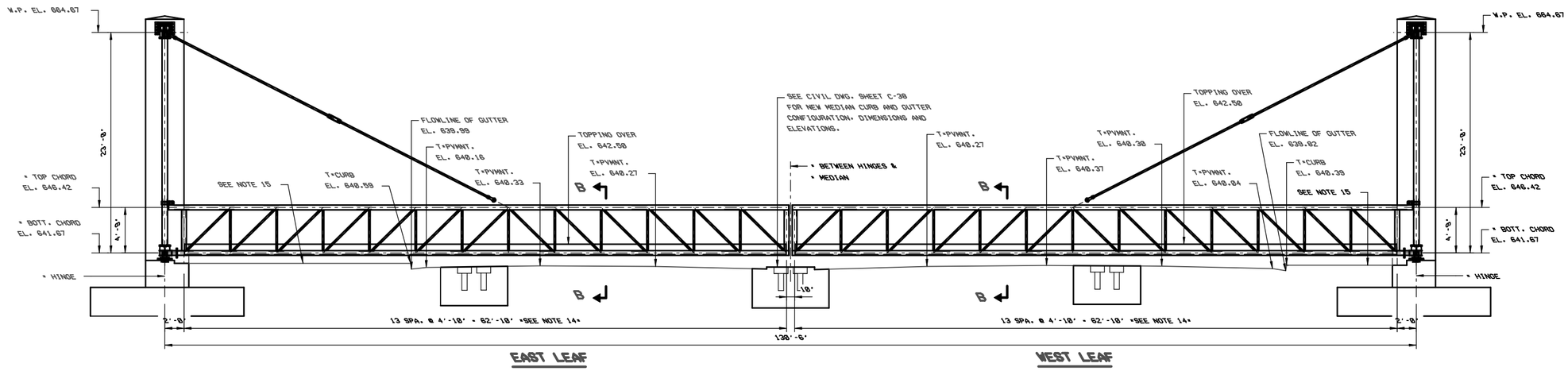

ELEVATION A-A *LOOKING SOUTH*

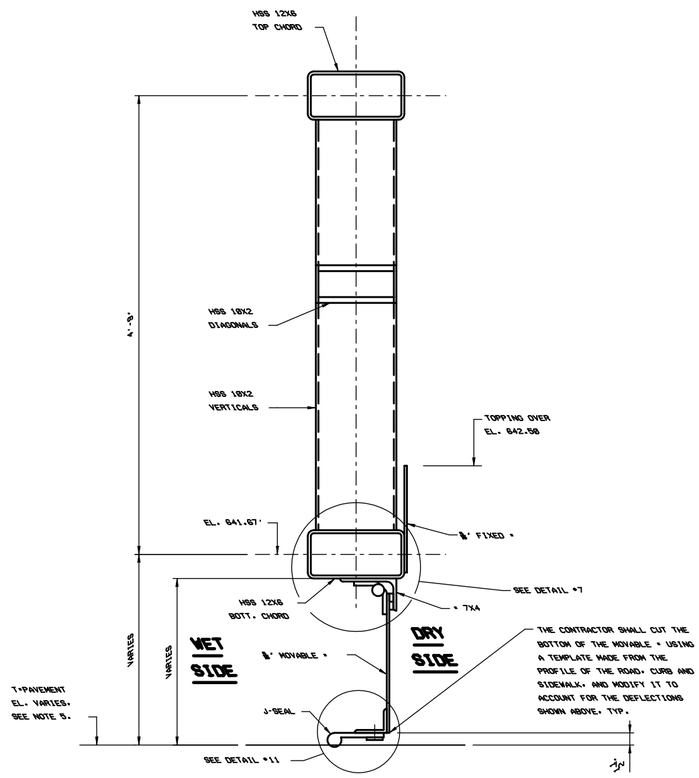

SECTION B - B

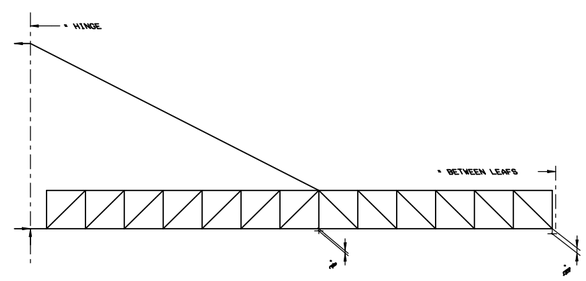

THEORETICAL DEFLECTION DIAGRAM

GENERAL NOTES:

1. WORK SHEETS SG-01 THROUGH SG-18 TOGETHER.
2. FOR PLAN AND DETAIL ELEVATIONS, SEE SHEETS SG-04 AND SG-05
3. FOR DETAILS *7 AND *11 SEE SHEET SG-07.
4. FOR GENERAL CONCRETE NOTES, SEE SHEET S-28.
5. TOP OF PAVEMENT ELEVATIONS SHOWN ARE APPROXIMATE AND MUST BE VERIFIED IN FIELD BY CONTRACTOR PRIOR TO FABRICATION OF MOVABLE PLATE IN BOTTOM OF GATE.
6. STRUCTURAL STEEL SHALL CONFORM TO THE LATEST AISC 'SPECIFICATION FOR THE DESIGN, FABRICATION AND ERECTION OF STRUCTURAL STEEL FOR BUILDINGS' AND THE ILLINOIS DEPARTMENT OF TRANSPORTATION STANDARD SPECIFICATIONS FOR ROAD AND BRIDGE CONSTRUCTION 2002.
7. ALL STRUCTURAL STEEL MUST BE AASHTO M 183 GRADE 36.
8. HOLLOW STRUCTURAL STEEL TUBES *HSS* SHALL BE ASTM A500, GRADE B, FY = 46 KSI.
9. FASTENERS SHALL BE GALVANIZED HIGH STRENGTH BOLTS M20, 7/8 " DIAMETER, UNLESS OTHERWISE NOTED.
10. ALL WELDING SHALL CONFORM TO THE LATEST SPECIFICATION OF THE AMERICAN WELDING SOCIETY, AWS D1.1 OR D1.6 EXCEPT AS OTHERWISE SHOWN OR NOTED. ALL WELDED CONNECTIONS SHALL BE MADE WITH AWS A5.1 OR A5.5 E70XX ELECTRODES OR LOW CARBON CONTENT ELECTRODES FOR WELDING STAINLESS STEEL TO STAINLESS STEEL OR STAINLESS STEEL TO LOW CARBON STEEL. MINIMUM 70 KSI TENSILE STRENGTH. E308L OR E316L. ALL WELDING MUST BE CONTINUOUS UNLESS OTHERWISE NOTED.
11. THE COLOR OF THE FINAL FINISH COAT FOR ALL STEEL SURFACES SHALL BE AS SELECTED BY THE GOVERNMENT.
12. DISSIMILAR METALS SHALL BE SEPARATED FROM EACH OTHER WITH APPROVED GASKETS OR COATINGS TO PREVENT GALVANIC CORROSION.
13. ALL EQUIPMENT, ANCHOR BOLT DIMENSIONS AND LOCATIONS SHALL BE VERIFIED FROM CERTIFIED VENDER DRAWINGS, PRIOR TO CONSTRUCTION.
14. CONTRACTOR TO VERIFY AND ADJUST TRUSS PANEL LENGTHS IF NECESSARY TO MAINTAIN A MIN. DISTANCE OF 12'-6" FROM FACE OF CURB TO * OF HINGE AND THE LOCATION OF THE END TRUSS VERTICAL 5' FROM THE APPROXIMATE * OF RAISED MEDIAN, AND MAINTAIN EQUAL LEAFS.
15. SEE CIVIL DWGS. FOR EL. OF TOP OF PCC SIDEWALK SILL AND ADDITIONAL DETAILS.
16. ALL DIMENSIONS AND ELEVATIONS MUST BE VERIFIED IN FIELD BY CONTRACTOR PRIOR TO FABRICATION OF MATERIALS.
17. SELECT PROPORTIONS FOR CONCRETE AND PROVIDE CONCRETE WHICH HAS MINIMUM SHRINKAGE CRACKS, HIGH DURABILITY AND HIGH IMPERMEABILITY. WHERE CLOSE SPACING OF REINFORCING BARS, SLEEVES, ANCHORAGES OR INSERTS WILL REQUIRE A DIFFERENT MIX DESIGN TO ENSURE FLOWABILITY OF CONCRETE, PROVIDE A MIX DESIGN UTILIZING A MID-RANGE OR HIGH-RANGE WATER REDUCING ADMIXTURE AS NECESSARY.

US ARMY CORPS
OF ENGINEERS
Chicago District

SYMBOL	AMENDMENT DESCRIPTION	DATE APPROVED SYMBOL	DESCRIPTION	DATE APPROVED

DESIGNED BY: DAS | DATE: 08-18-2008
DRAWN BY: DAS | SCALE: NONE
CHECKED BY: AAG | CONTRACT NUMBER: W912P6-08-B-0003
SUBMITTED BY: | DATE:

U.S. ARMY ENGINEER DISTRICT
CORPS OF ENGINEERS
CHICAGO, ILLINOIS

CTE AECOM
303 East Wacker Drive, Suite 600, Chicago, Illinois 60601-5278
T 312.373.6000 F 312.373.6799 www.aecom.com

DES PLANES RIVER, ILLINOIS
LOCAL FLOOD PROTECTION
FLOODWALL 37
RIVER RD/MILWAUKEE AVE.
MILWAUKEE AVENUE FLOOD GATE
CLOSURE STRUCTURE
ELEVATION AND SECTIONS

SHEET REFERENCE NUMBER:
SG-03
SHEET 113 OF 131

PLOT DATE: 8/18/2008
FILENAME: IFILE1

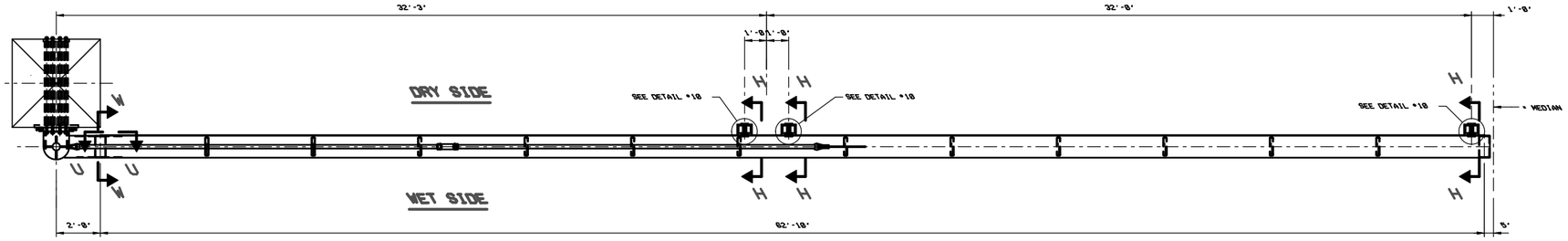

PLAN - EAST LEAF

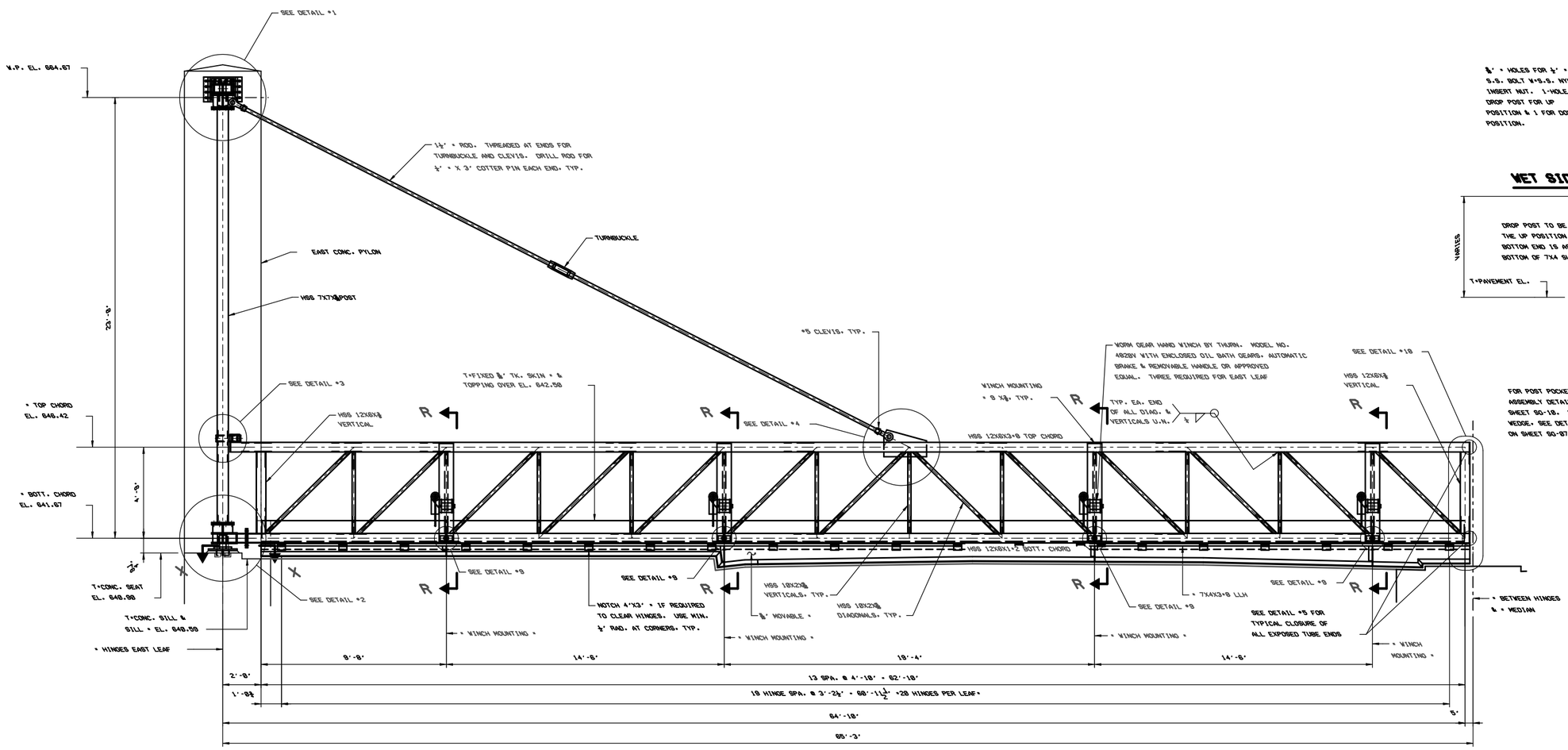

ELEVATION - EAST LEAF LOOKING SOUTH

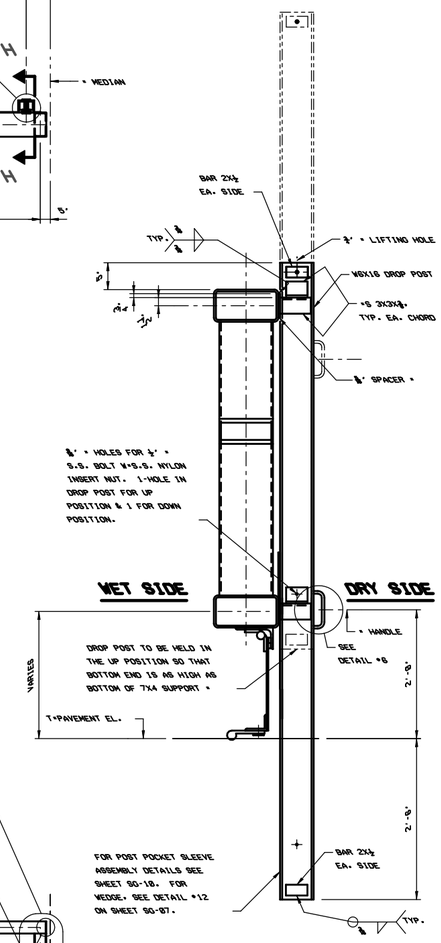

SECTION H-H

NOTES:

1. FOR SECTIONS AND DETAILS SEE SHEETS SG-06 THROUGH SG-09.
2. FOR GENERAL NOTES SEE SHEET SG-03.
3. FOR CONCRETE PYLON SEE SHEET SG-02

US ARMY CORPS OF ENGINEERS
Chicago District

SYMBOL	AMENDMENT DESCRIPTION	DATE	APPROVED	SYMBOL	DESCRIPTION	DATE	APPROVED

DESIGNED BY: DAS | DATE: 08-18-2008
DRAWN BY: DAS | SCALE: NONE
CHECKED BY: AAG | CONTRACT NUMBER: W912P6-08-B-0003
SUBMITTED BY: | DATE:

U.S. ARMY ENGINEER DISTRICT
CORPS OF ENGINEERS
CHICAGO, ILLINOIS

CTE AECOM
303 East Wacker Drive, Suite 600, Chicago, Illinois 60601-5276
T 312.938.0300 F 312.938.1109 www.cte.aecom.com

DES PLAINES RIVER, ILLINOIS
LOCAL FLOOD PROTECTION
FLOODWALL 37
RIVER RD/MILWAUKEE AVE.
MILWAUKEE AVENUE FLOOD GATE
CLOSURE STRUCTURE
PLAN, ELEVATION AND SECTION

SHEET REFERENCE NUMBER:
SG-04
SHEET 114 OF 131

PLOT DATE: 8/18/2008
FILENAME: $FILE$

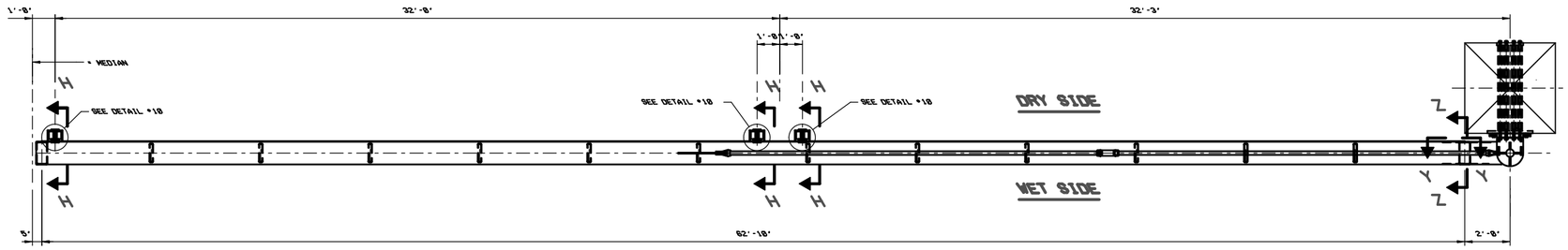

PLAN - WEST LEAF

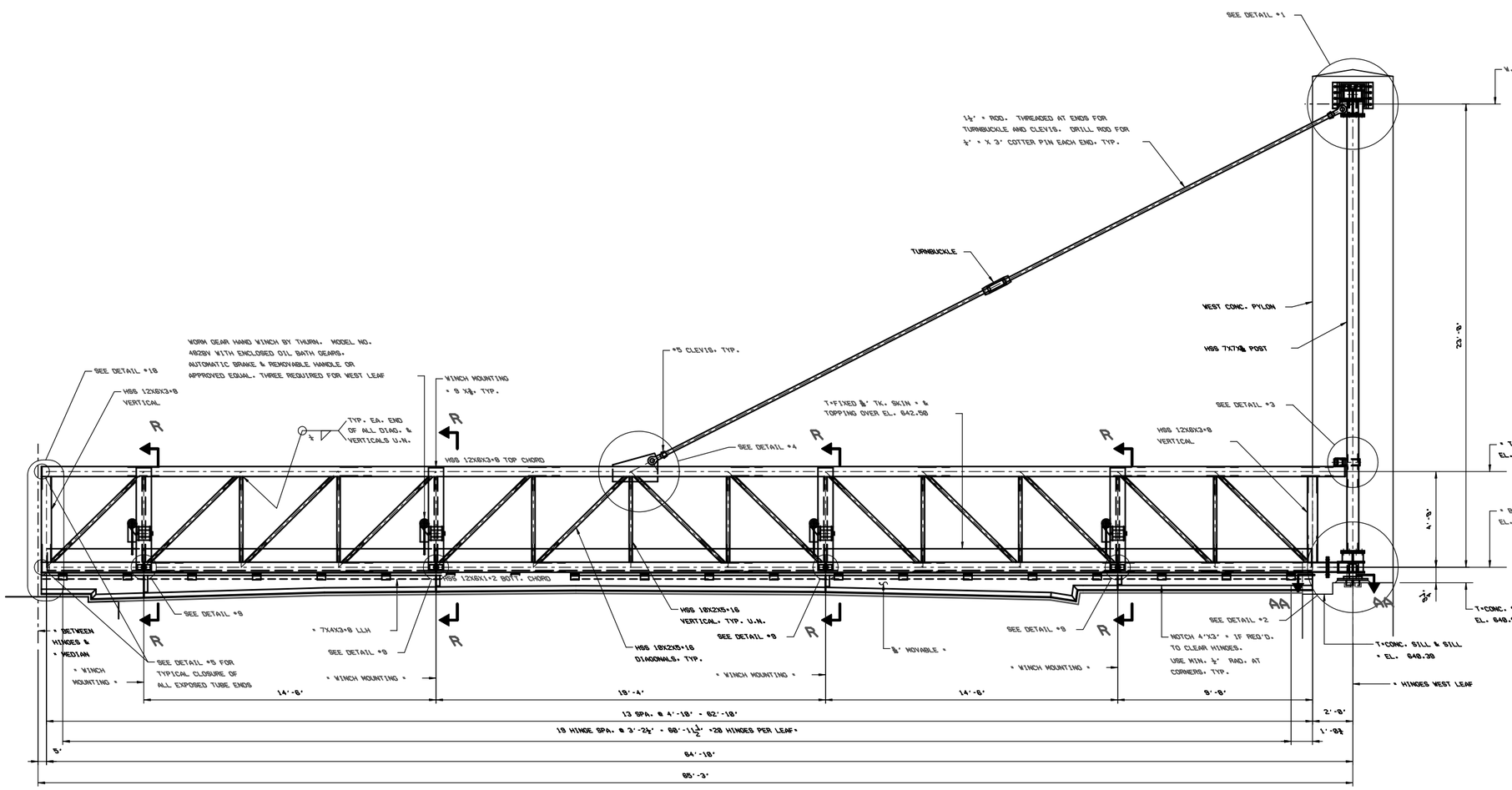

ELEVATION - WEST LEAF LOOKING SOUTH

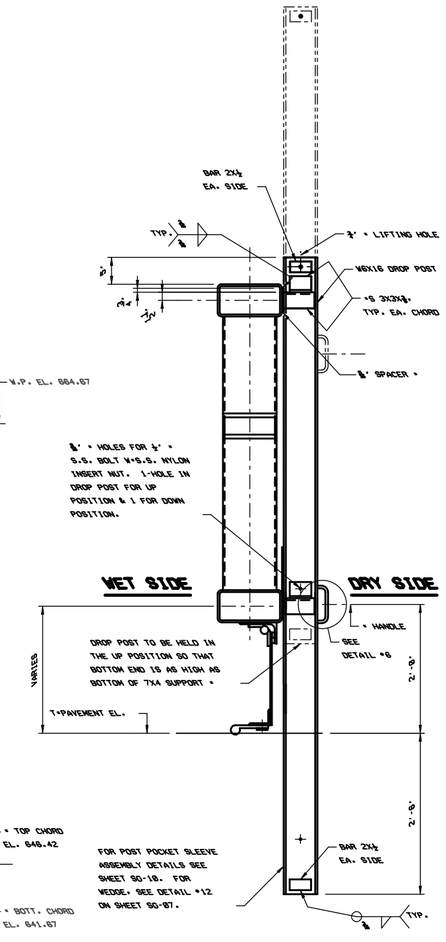

SECTION H-H

NOTES:

1. FOR SECTIONS AND DETAILS SEE SHEETS SG-06 THROUGH SG-09.
2. FOR GENERAL NOTES SEE SHEET SG-03.
3. FOR CONCRETE PYLON SEE SHEET SG-02.

US ARMY CORPS OF ENGINEERS
Chicago District

SYMBOL	AMENDMENT DESCRIPTION	DATE	APPROVED	SYMBOL	DESCRIPTION	DATE	APPROVED

DESIGNED BY: DAS | DATE: 08-18-2008
DRAWN BY: DAS | SCALE: NONE
CHECKED BY: AAG | CONTRACT NUMBER: W912P6-08-B-0003
SUBMITTED BY: | DATE:

U.S. ARMY ENGINEER DISTRICT
CORPS OF ENGINEERS
CHICAGO, ILLINOIS

CTE AECOM
303 East Wacker Drive, Suite 600, Chicago, Illinois 60601-5276
T 312.938.0300 F 312.938.1109 www.cte.aecom.com

DES PLAINES RIVER, ILLINOIS
LOCAL FLOOD PROTECTION
FLOODWALL 37
RIVER RD/MILWAUKEE AVE.
MILWAUKEE AVENUE FLOOD GATE
CLOSURE STRUCTURE
PLAN, ELEVATION AND SECTION

SHEET REFERENCE NUMBER:
SG-05
SHEET 115 OF 131

PLOT DATE: 8/18/2008
FILENAME: $FILE$

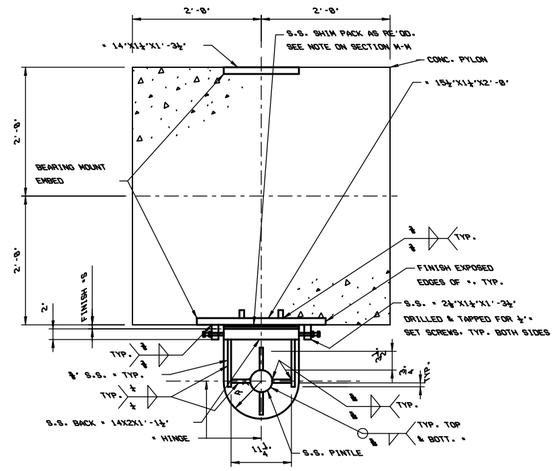

SECTION B-B

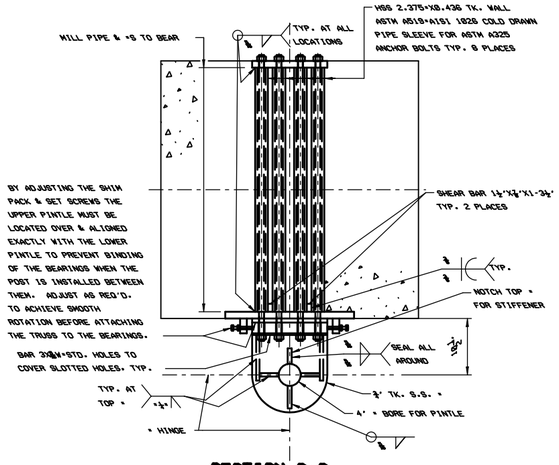

SECTION C-C

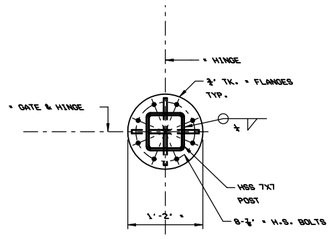

SECTION F-F

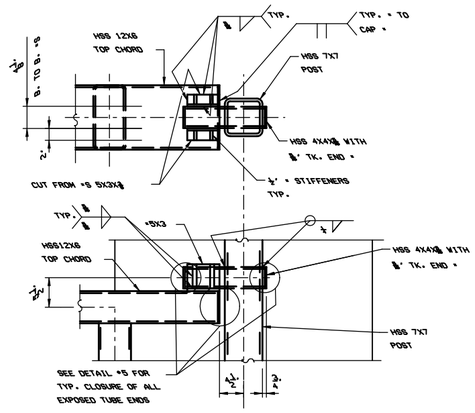

DETAIL *3

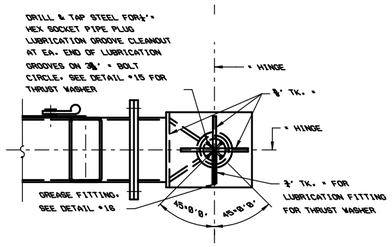

SECTION E-E

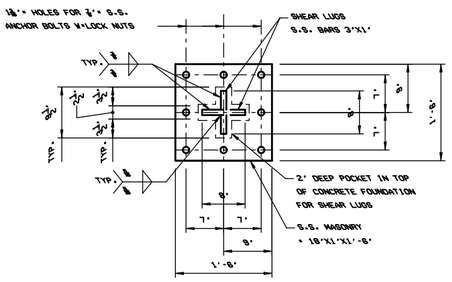

SECTION Q-Q

NOTES:

1. WORK SHEETS SG-81 THROUGH SG-18 TOGETHER.
2. FOR GENERAL NOTES SEE SHEET SG-03.
3. FOR CONCRETE PYLON SEE SHEET SG-02.

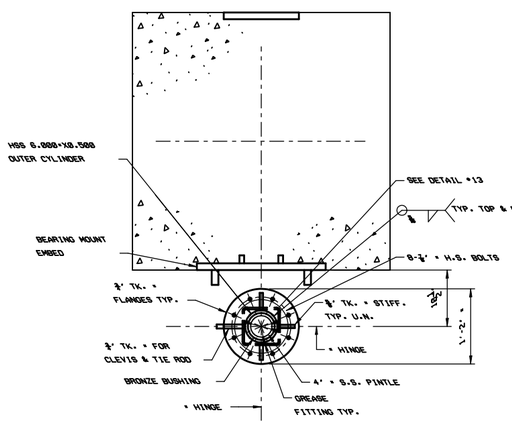

SECTION A-A

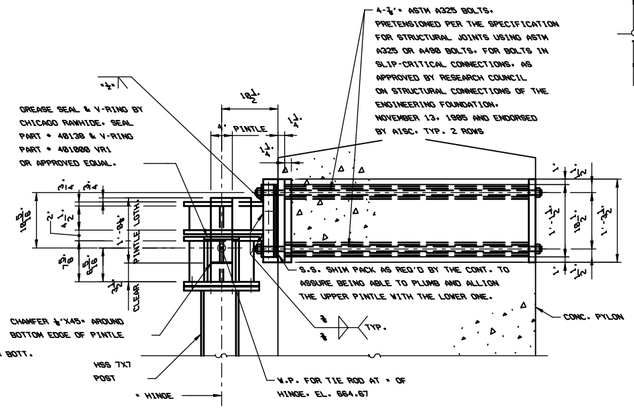

SECTION M-M

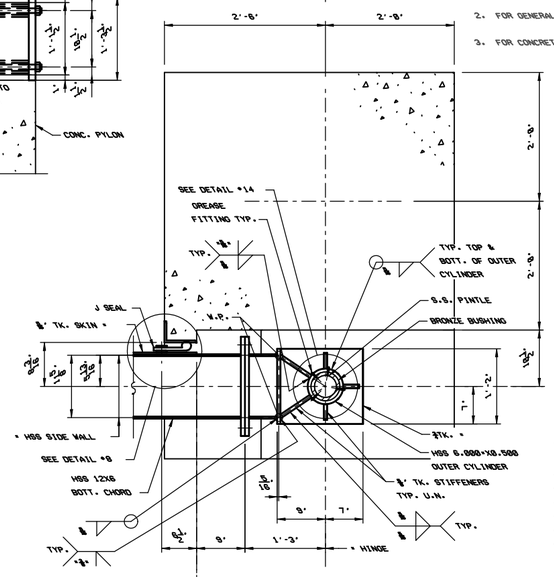

SECTION D-D

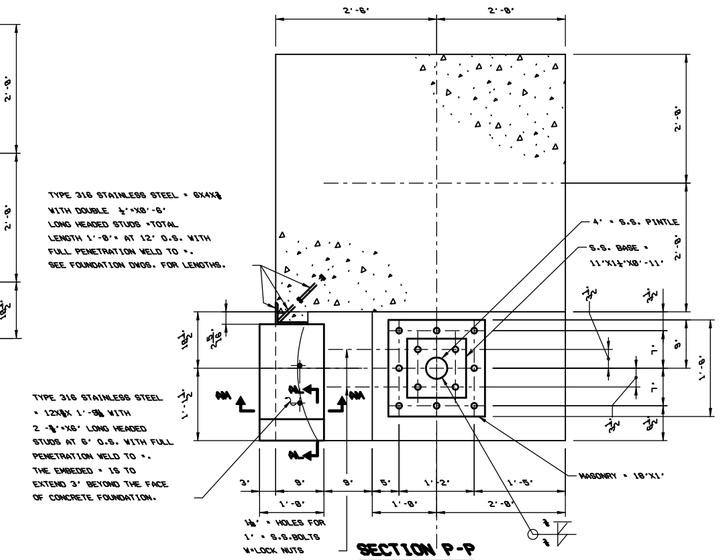

SECTION P-P

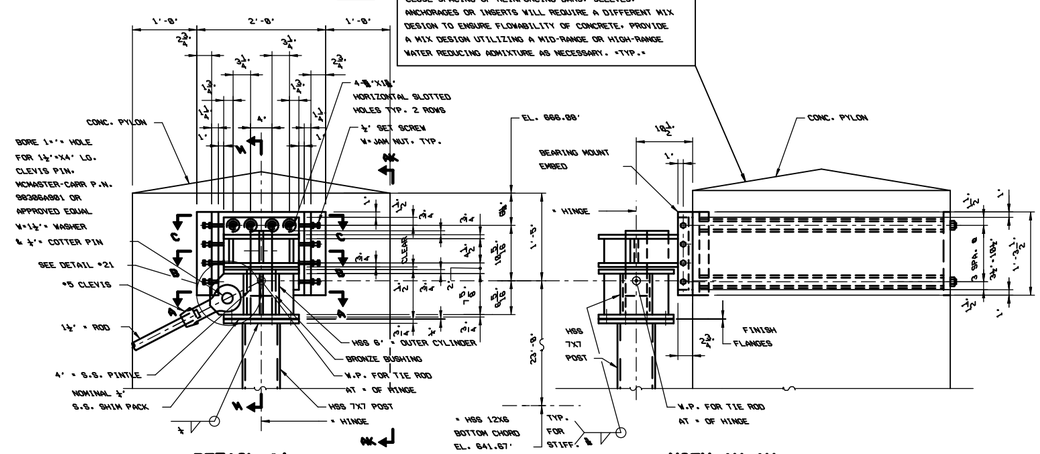

NOTE:

SELECT PROPORTIONS FOR CONCRETE AND PROVIDE CONCRETE WHICH HAS MINIMUM SHRINKAGE CRACKS, HIGH DURABILITY AND HIGH IMPERMEABILITY. WHERE CLOSE SPACING OF REINFORCING BARS, SLEEVES, ANCHORAGES OR INSERTS WILL REQUIRE A DIFFERENT MIX DESIGN TO ENSURE FLOWABILITY OF CONCRETE, PROVIDE A MIX DESIGN UTILIZING A MID-RANGE OR HIGH-RANGE WATER REDUCING ADMIXTURE AS NECESSARY. *TYP.*

DETAIL *1

VIEW AK-AK

SECTION J-J

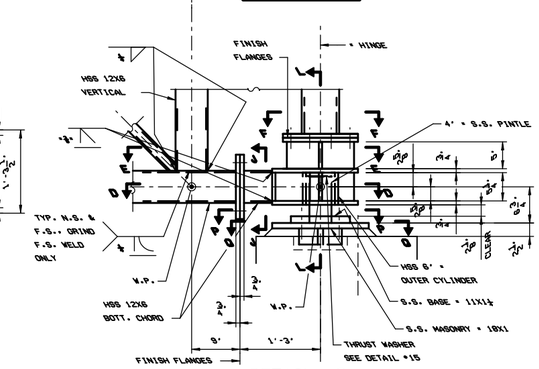

DETAIL *2

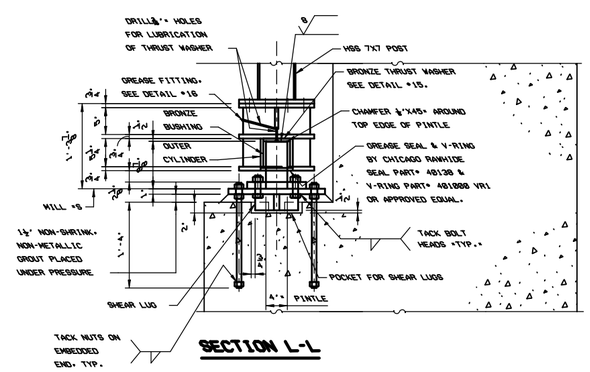

SECTION L-L

US ARMY CORPS OF ENGINEERS
Chicago District

SYMBOL	AMENDMENT DESCRIPTION	DATE APPROVED SYMBOL	DESCRIPTION	DATE APPROVED

DESIGNED BY: DAS — DATE: 08-18-2008
DRAWN BY: DAS — SCALE: NONE
CHECKED BY: AAG — CONTRACT NUMBER: W912P6-08-B-0003
SUBMITTED BY: — DATE:

U.S. ARMY ENGINEER DISTRICT
CORPS OF ENGINEERS
CHICAGO, ILLINOIS

CTE | AECOM
303 East Wacker Drive, Suite 600, Chicago, Illinois 60601-5276
T 312.602.5000 F 312.602.5101 www.aecom.com

DES PLANES RIVER, ILLINOIS
LOCAL FLOOD PROTECTION
FLOODWALL 37
RIVER RD/MILWAUKEE AVE.
MILWAUKEE AVENUE
CLOSURE STRUCTURE
MISC. SECTIONS AND DETAILS

SHEET REFERENCE NUMBER:
SG-06
SHEET 116 OF 131

PLOT DATE: 8/18/2008
FILENAME: $FILE$

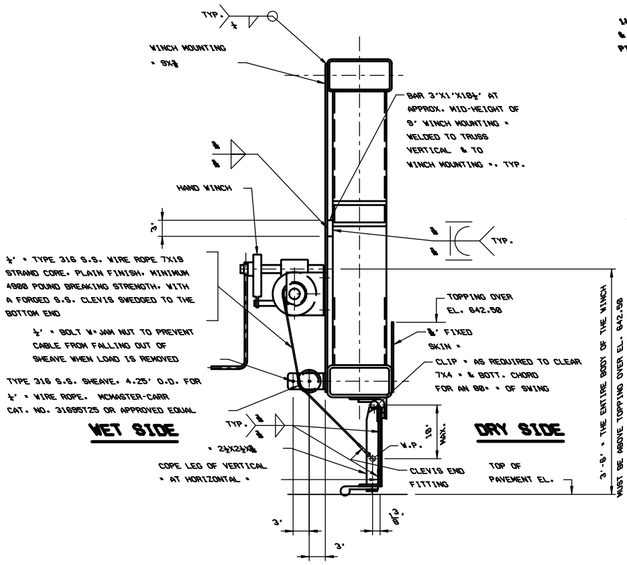

SECTION R-R

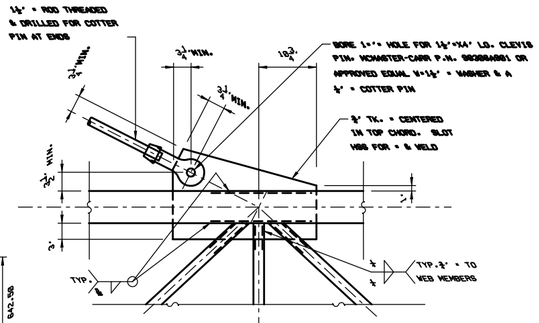

DETAIL #4

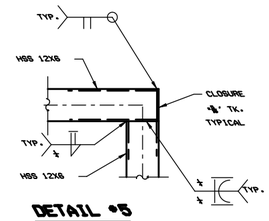

DETAIL #5

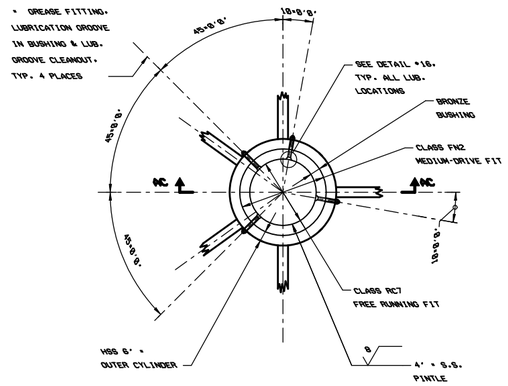

DETAIL #14

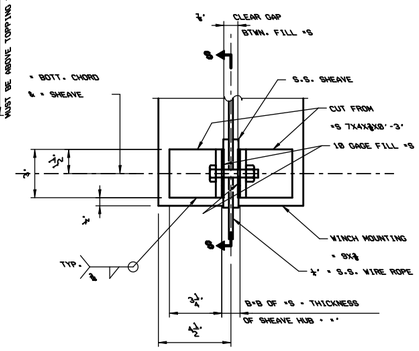

DETAIL #9

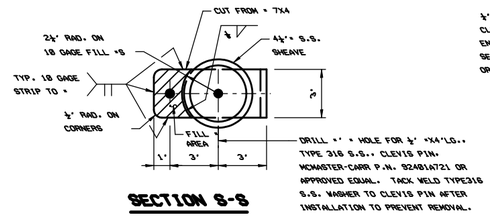

SECTION S-S

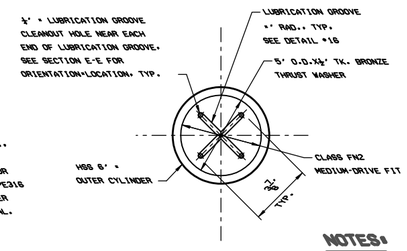

DETAIL #15

NOTES:

1. WORK SHEETS SG-01 THROUGH SG-18 TOGETHER.
2. FITS & FINISHES FOR BEARINGS SHALL BE IN ACCORDANCE WITH THE AMERICAN ASSOCIATION OF STATE HIGHWAY AND TRANSPORTATION OFFICIALS "AASHTO" STANDARD SPECIFICATION FOR MOVABLE HIGHWAY BRIDGES AND AMERICAN NATIONAL STANDARDS INSTITUTE "ANSI" B4.1 AND B46.1.
3. √ INDICATES SURFACE FINISH REQUIREMENTS.

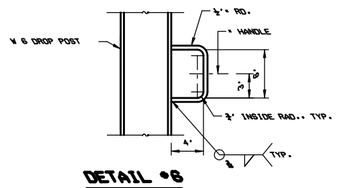

DETAIL #8

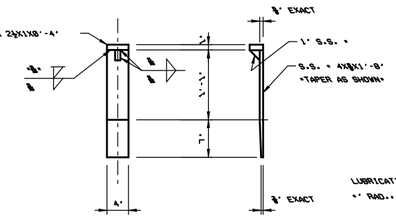

DETAIL #12

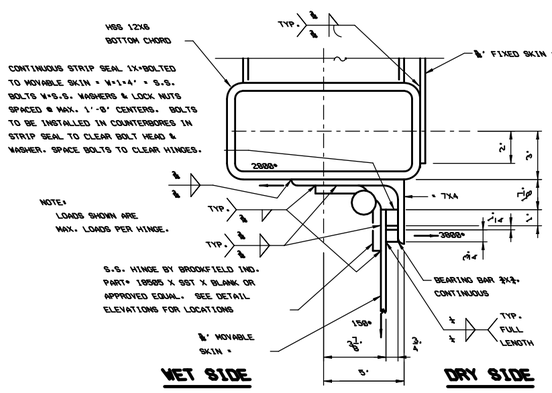

DETAIL #7

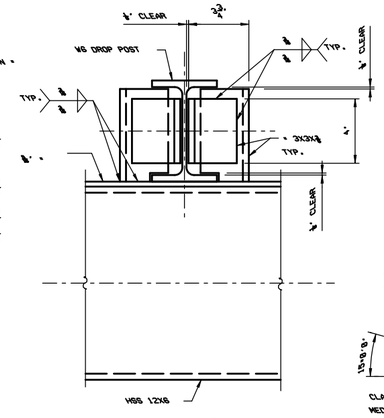

DETAIL #10

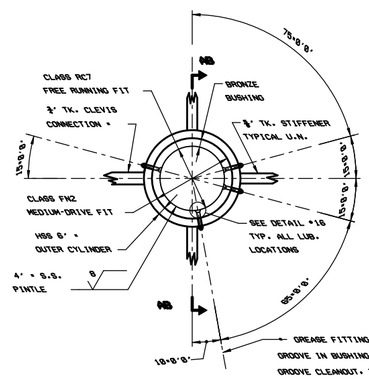

DETAIL #13

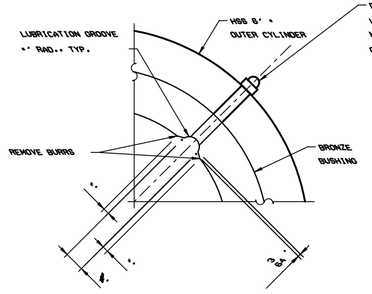

DETAIL #16

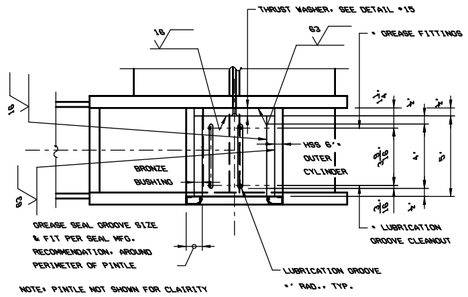

SECTION AC-AC

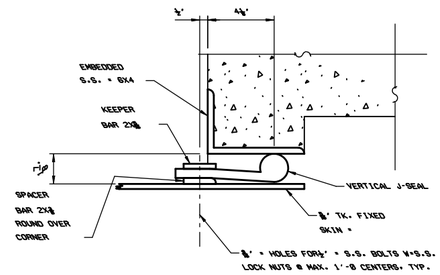

DETAIL #8

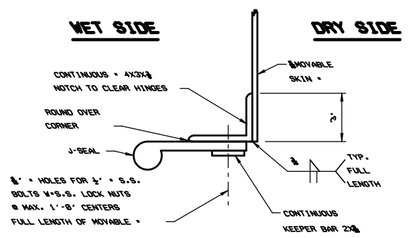

DETAIL #11

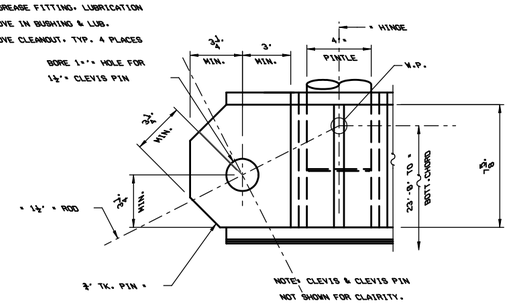

DETAIL #21

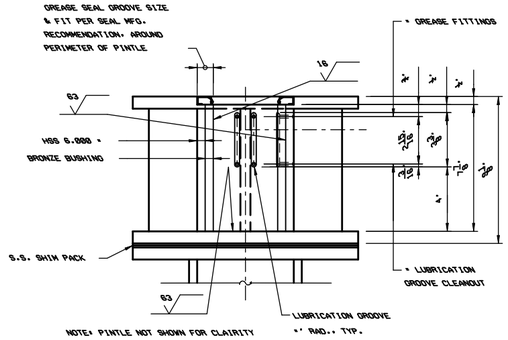

SECTION AB-AB

US ARMY CORPS OF ENGINEERS
Chicago District

SYMBOL	AMENDMENT DESCRIPTION	DATE APPROVED SYMBOL	DESCRIPTION	DATE APPROVED

DESIGNED BY: DAS
DATE: 08-18-2008
DRAWN BY: DAS
SCALE: NONE
CHECKED BY: AAG
CONTRACT NUMBER: W912P6-08-B-0003
SUBMITTED BY:
DATE:

U.S. ARMY ENGINEER DISTRICT
CORPS OF ENGINEERS
CHICAGO, ILLINOIS

CTE AECOM
303 East Wacker Drive, Suite 600, Chicago, Illinois 60601-5278
TEL: 312.373.6000 FAX: 312.373.7159 www.aecom.com

DES PLAINES RIVER, ILLINOIS
LOCAL FLOOD PROTECTION
FLOODWALL 37
RIVER RD/MILWAUKEE AVE.
MILWAUKEE AVENUE
CLOSURE STRUCTURE
MISC. SECTIONS AND DETAILS

SHEET REFERENCE NUMBER:
SG-07
SHEET 117 OF 131

PLOT DATE: 8/19/2008
FILENAME: =FILE=

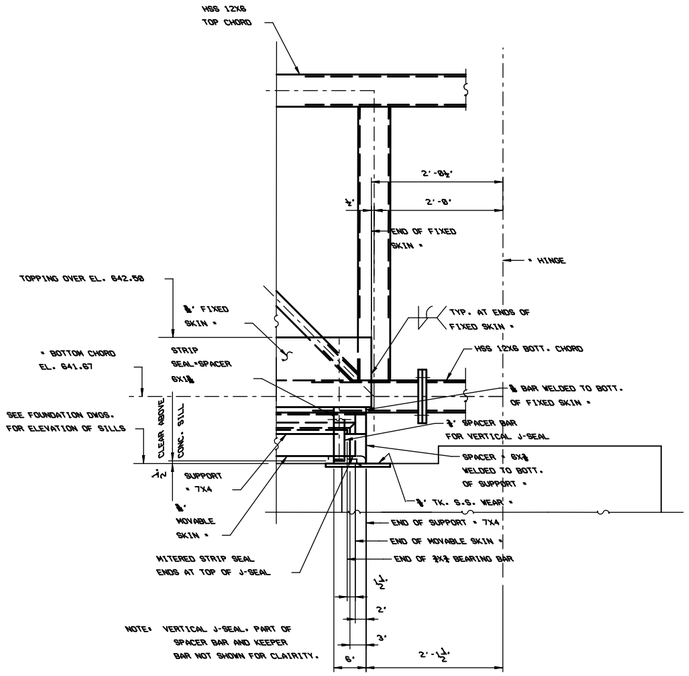

SECTION U-U *SHOWN*

SECTION Y-Y *OPP. HAND*

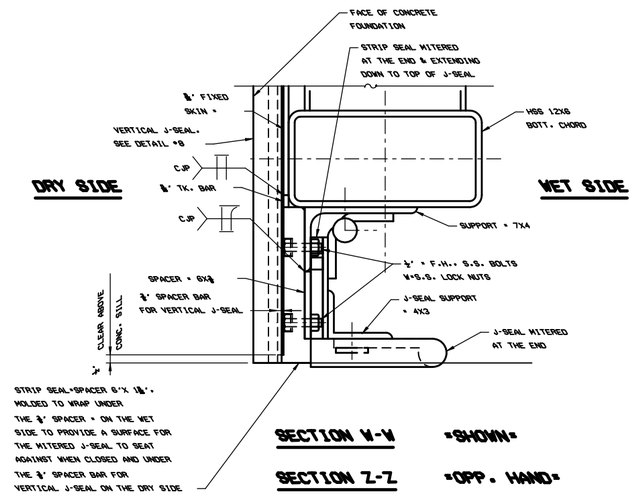

SECTION V-V *SHOWN*

SECTION Z-Z *OPP. HAND*

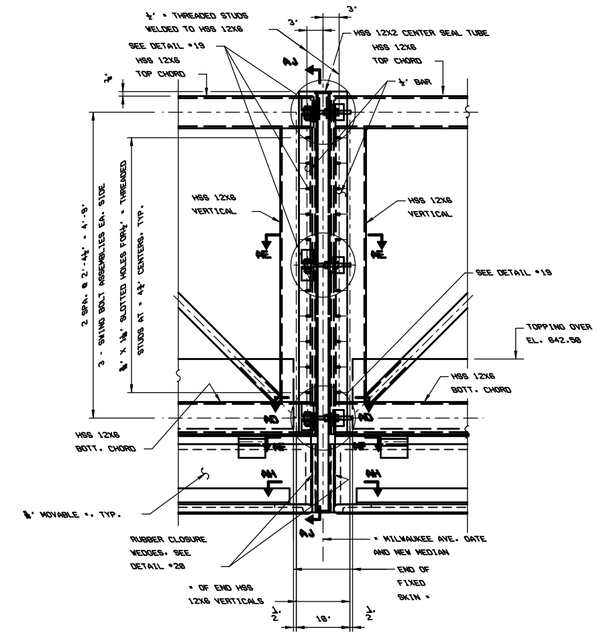

DETAIL *18

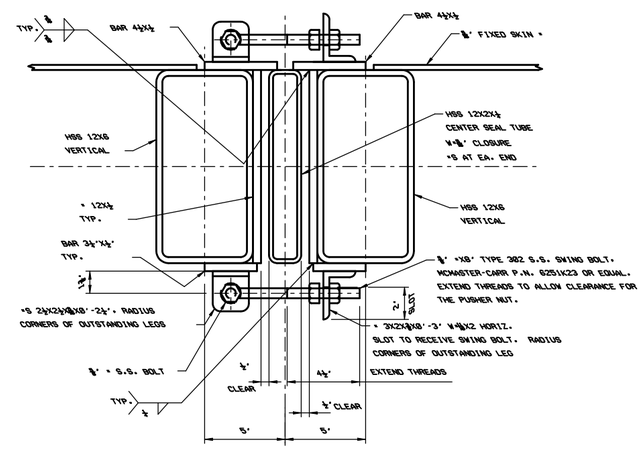

SECTION AD-AD

*SHOWN W*MOVABLE END PIECES IN RETRACTED POSITION*

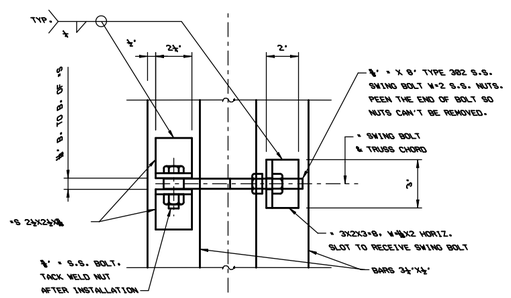

DETAIL *19

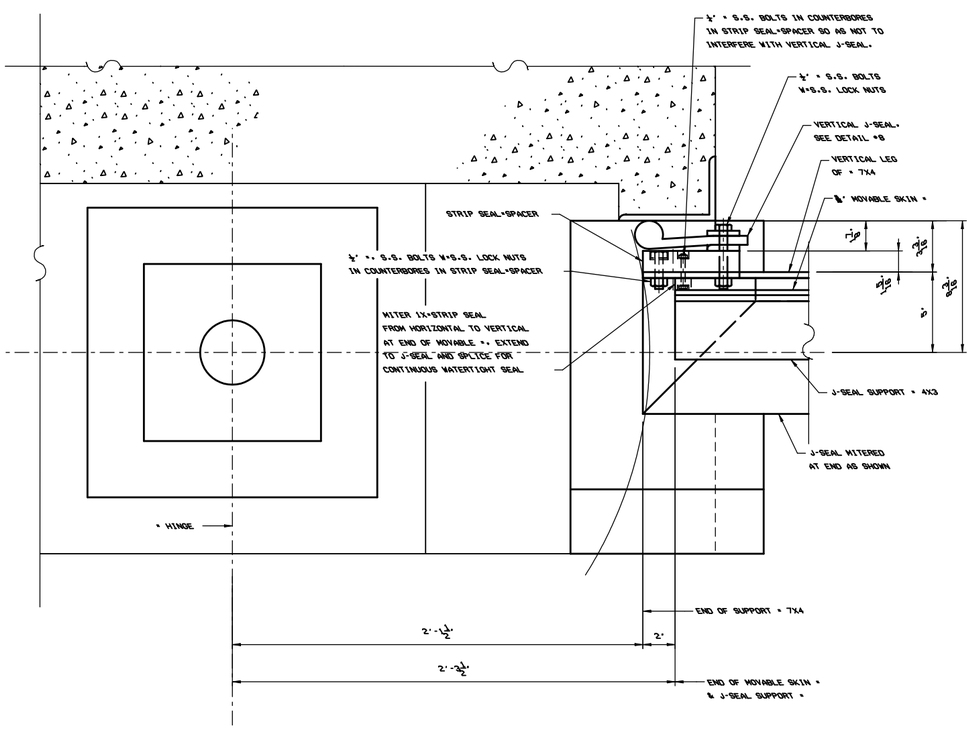

SECTION X-X *SHOWN*

SECTION AA-AA *OPP. HAND*

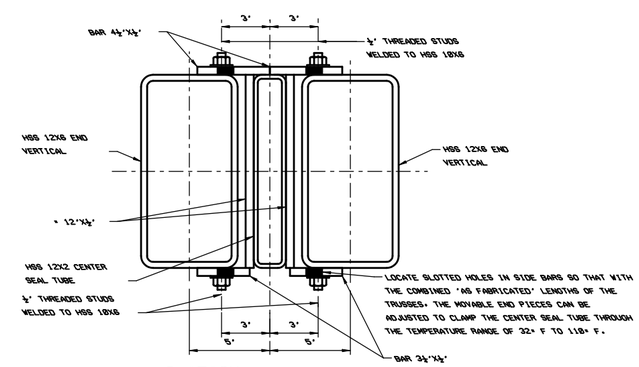

SECTION AE-AE

*SHOWN W*MOVABLE END PIECES IN EXTENDED POSITION*

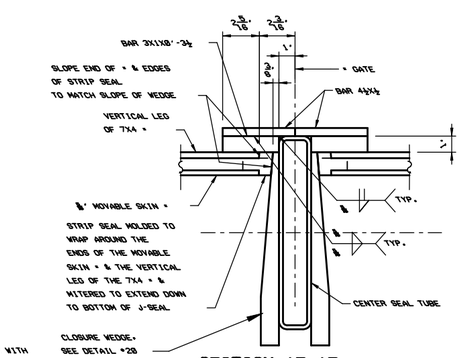

SECTION AF-AF

NOTES:

1. WORK SHEETS SG-81 THROUGH SG-18 TOGETHER.
2. FOR CONCRETE PYLON SEE SHEET SG-82.

US ARMY CORPS
OF ENGINEERS
Chicago District

SYMBOL	AMENDMENT DESCRIPTION	DATE APPROVED SYMBOL	DESCRIPTION	DATE APPROVED

DESIGNED BY: DAS | DATE: 08-18-2008
DRAWN BY: DAS | SCALE: NONE
CHECKED BY: AAG | CONTRACT NUMBER: W912P6-08-B-0003
SUBMITTED BY: | DATE:

U.S. ARMY ENGINEER DISTRICT
CORPS OF ENGINEERS
CHICAGO, ILLINOIS

CTE AECOM
303 East Wacker Drive, Suite 600, Chicago, Illinois 60601-5276
T 312.373.6000 F 312.373.6799 www.aecom.com

DES PLANES RIVER, ILLINOIS
LOCAL FLOOD PROTECTION
FLOODWALL 37
RIVER RD/MILWAUKEE AVE.
MILWAUKEE AVENUE
CLOSURE STRUCTURE
MISC. SECTIONS AND DETAILS

SHEET REFERENCE NUMBER:
SG-08
SHEET 118 OF 131

PLOT DATE: 8/18/2008
FILENAME: $FILE$

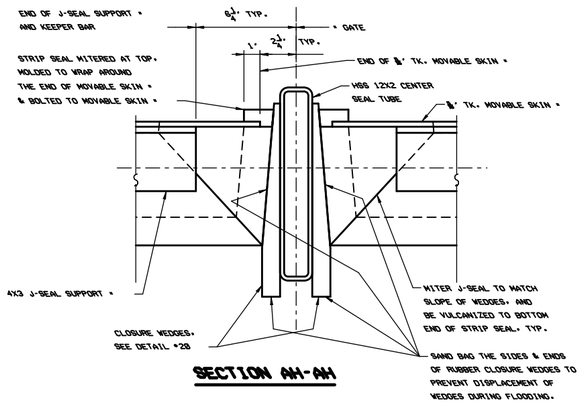

SECTION AH-AH

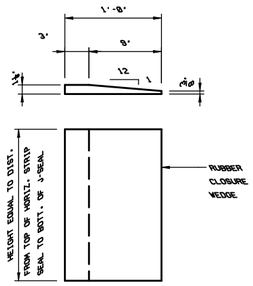

DETAIL #28

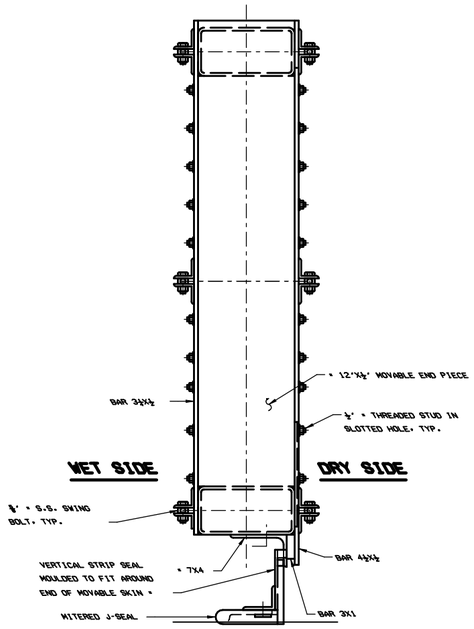

SECTION AJ-AJ

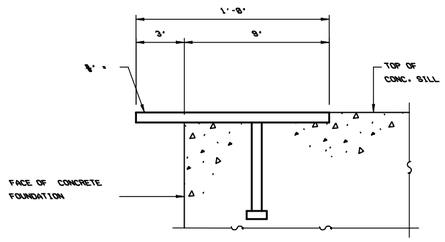

SECTION AM-AM

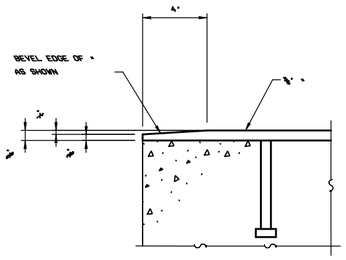

SECTION AL-AL

NOTES:

1. WORK SHEETS SG-01 THROUGH SG-10 TOGETHER.

US ARMY CORPS OF ENGINEERS
Chicago District

SYMBOL	AMENDMENT DESCRIPTION	DATE	APPROVED	SYMBOL	DESCRIPTION	DATE	APPROVED

DESIGNED BY: DAS
DATE: 08-18-2008
DRAWN BY: DAS
SCALE: NONE
CHECKED BY: AAG
CONTRACT NUMBER: W912P6-08-B-0003
SUBMITTED BY:
DATE:

U.S. ARMY ENGINEER DISTRICT
CORPS OF ENGINEERS
CHICAGO, ILLINOIS

CTE AECOM
303 East Wacker Drive, Suite 600, Chicago, Illinois 60601-5278
T 312.938.0300 F 312.938.1109 www.cte.aecom.com

DES PLAINES RIVER, ILLINOIS
LOCAL FLOOD PROTECTION
FLOODWALL 37
RIVER RD/MILWAUKEE AVE.
MILWAUKEE AVENUE
CLOSURE STRUCTURE
MISC. SECTIONS AND DETAILS

SHEET REFERENCE NUMBER:
SG-09
SHEET 119 OF 131

PLOT DATE: 8/18/2008
FILENAME: $FILE$

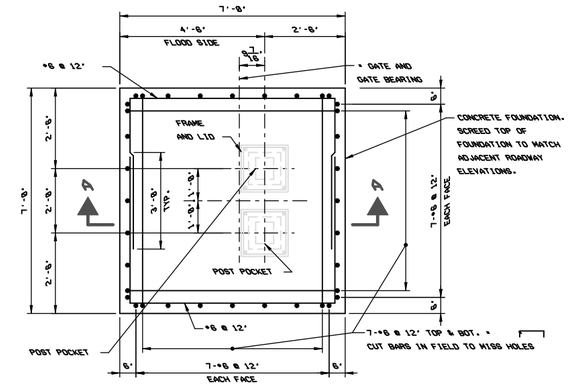

PLAN AT INTERMEDIATE SUPPORT

0 1' 2' 4'

SCALE:1/2"=1'-0"

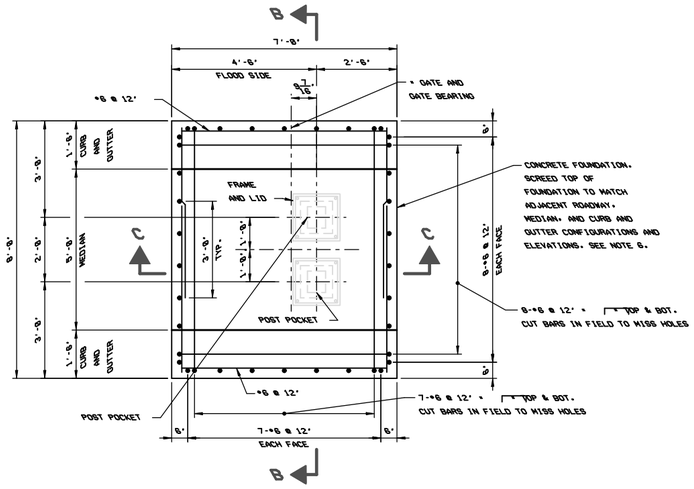

PLAN AT CENTER SUPPORT

0 1' 2' 4'

SCALE:1/2"=1'-0"

NOTES:

1. ASSUMED NET DESIGN SOIL BEARING PRESSURE - 2000 PSF VERIFY IN FIELD WITH INDEPENDENT GEOTECHNICAL ENGINEER.

2. BACKFILL AROUND STRUCTURES WITH LOW PLASTICITY SILTY CLAY PLACED IN 9" LOOSE LAYERS AND COMPACTED TO 90% ASTM D1557.

3. PAVEMENT REMOVAL SHALL BE IN ACCORDANCE WITH SECTION 440 OF THE STANDARD SPECIFICATIONS AND SHALL INCLUDE SAW CUTTING OF THE EXISTING PAVEMENT.

4. ALL REINFORCING BARS THIS SHEET SHALL BE EPOXY COATED.

5. USE TYPE III, HIGH EARLY STRENGTH CEMENT FOR GATE LATERAL SUPPORT FOUNDATIONS.

6. SEE CIVIL DWG. SHEET C-38 FOR MEDIAN, CURB AND GUTTER CONFIGURATIONS, DIMENSIONS AND ELEVATIONS.

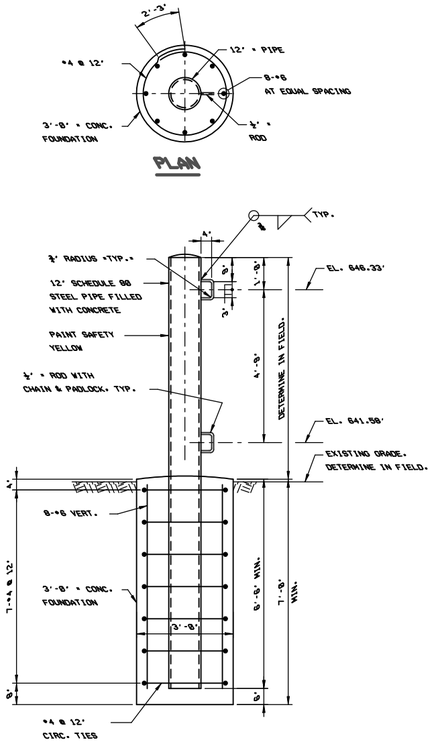

ELEVATION
GATE LOCKING STRUCTURE

#4 THUS

0 1' 2' 4'

SCALE:1/2"=1'-0"

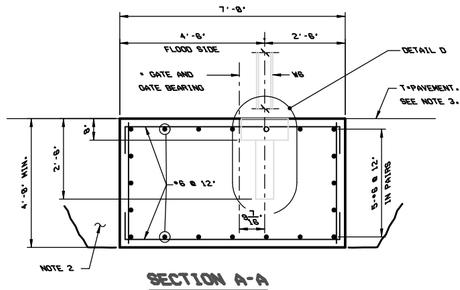

SECTION A-A

0 1' 2' 4'

SCALE:1/2"=1'-0"

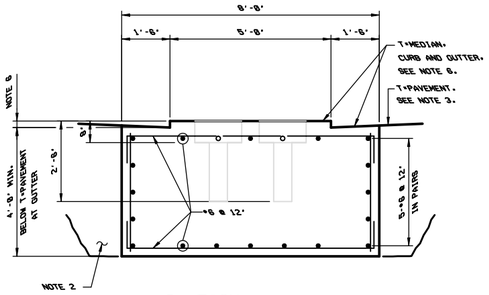

SECTION B-B

0 1' 2' 4'

SCALE:1/2"=1'-0"

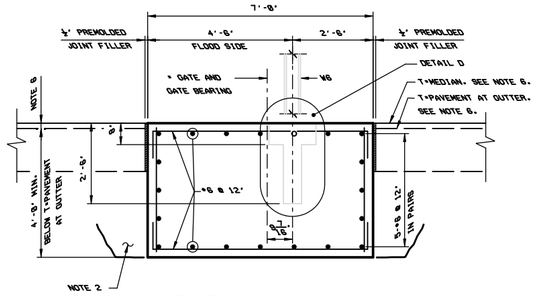

SECTION C-C

0 1' 2' 4'

SCALE:1/2"=1'-0"

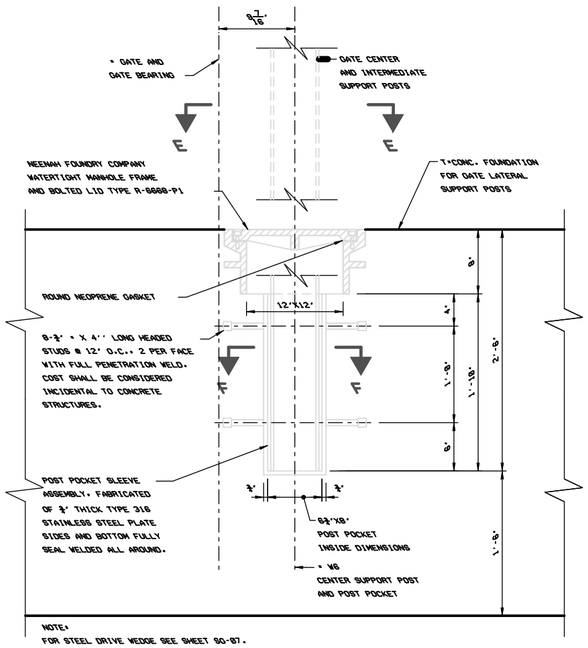

DETAIL D

0 6" 1' 2'

SCALE:1-1/2"=1'

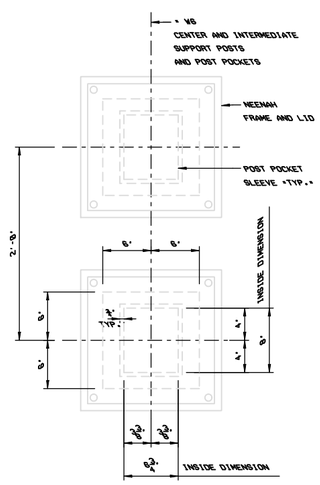

TOP VIEW E-E

0 6" 1' 2'

SCALE:1-1/2"=1'

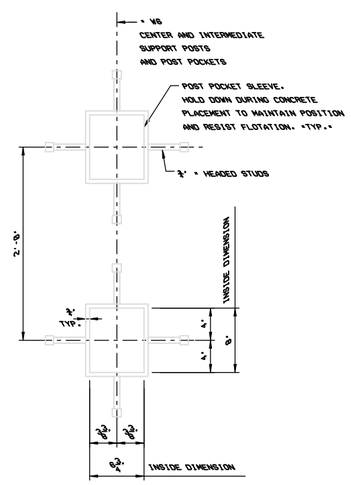

SECTION F-F

0 6" 1' 2'

SCALE:1-1/2"=1'

GATE CENTER AND INTERMEDIATE LATERAL SUPPORT FOUNDATIONS

US ARMY CORPS OF ENGINEERS
Chicago District

SYMBOL	AMENDMENT DESCRIPTION	DATE	APPROVED	SYMBOL	DESCRIPTION	DATE	APPROVED

DESIGNED BY: AAG | DATE: 08-18-2008
DRAWN BY: CHD | SCALE: AS SHOWN
CHECKED BY: DPV | CONTRACT NUMBER: W912P6-08-B-0003
SUBMITTED BY: | DATE:

U.S. ARMY ENGINEER DISTRICT
CORPS OF ENGINEERS
CHICAGO, ILLINOIS

CTE AECOM
303 East Wacker Drive, Suite 600, Chicago, Illinois 60601-5278
312.938.0300 FAX 312.938.1106 www.aecom.com

DES PLANES RIVER, ILLINOIS
LOCAL FLOOD PROTECTION
FLOODWALL 37
RIVER RD/MILWAUKEE AVE.
MILWAUKEE AVENUE FLOOD GATE
CLOSURE STRUCTURE
MISC. SECTIONS AND DETAILS

SHEET REFERENCE NUMBER:
SG-10
SHEET 120 OF 131

PLOT DATE: 8/18/2008
FILENAME: $FILE$

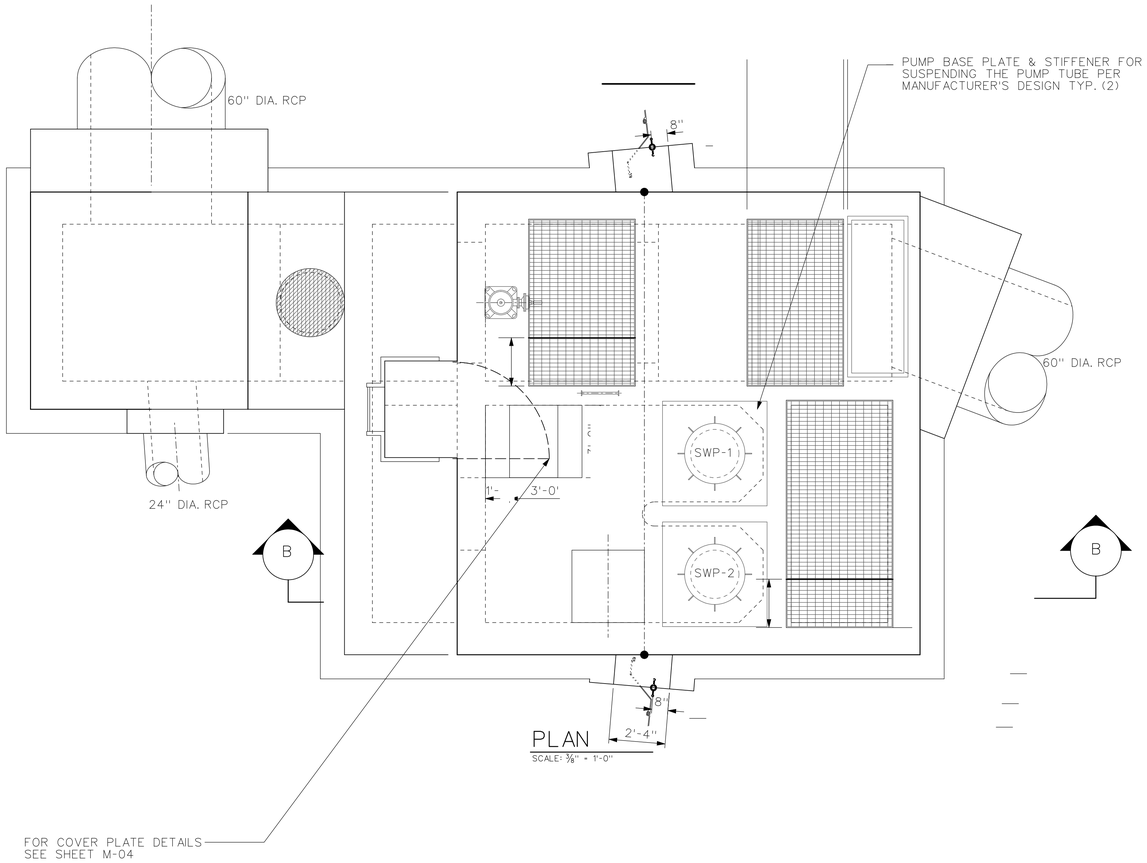

PLAN
SCALE: 3/8" = 1'-0"

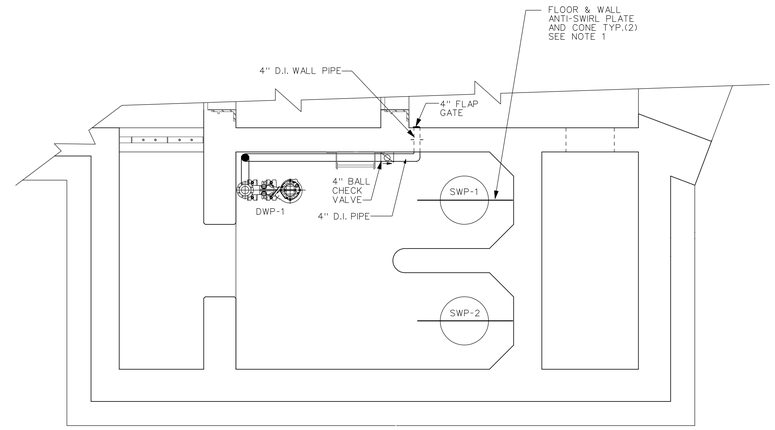

SECTION A
SCALE: 3/8 " = 1'-0"

PUMP SCHEDULE							
PUMP NO.	Q GPM	TOTAL HEAD FT H_2O	TOTAL HEAD OPERATING RANGE (FT,H_2O)	VOLTAGE /PHASE	HP	RPM	PUMP DESCRIPTION
SWP-1	2.600	13.1	5' TO 16'	460/3	14	1160	SUBMERSIBLE MIXED FLOW
SWP-2	2.600	13.1	5' TO 16'	460/3	14	1160	SUBMERSIBLE MIXED FLOW
DWP-1	200	14.7	10' TO 17'	460/3	3	1750	SUBMERSIBLE CENTRIFUGAL TYPE

REMARKS: REFER TO SPEC. 15132 FOR REQUIREMENTS

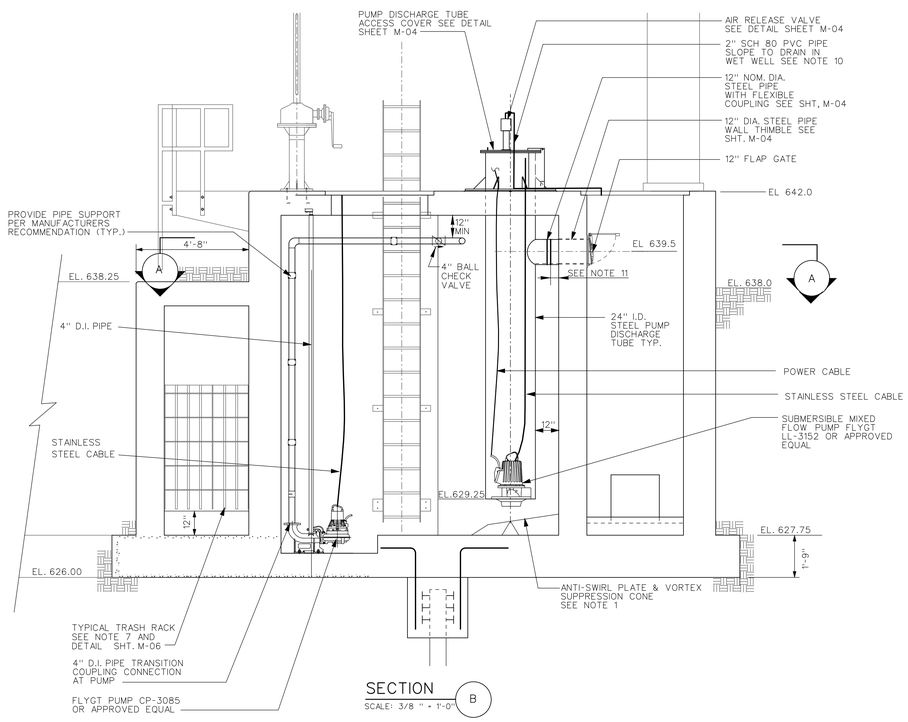

SECTION B
SCALE: 3/8 " = 1'-0"

PUMP FLOAT CONTROL SETTINGS		
PUMP No.	RISING WET WELL	FALLING WET WELL
SWP-1	START = EL.631.75	STOP = EL.629.75
SWP-2	START = EL.634.0	STOP = EL.631.0
DWP-1	START = EL.631.75	START= EL.629.75
	STOP = EL.627.5	STOP = EL.627.5
BOTTOM OF FLOAT PIPE ELEVATION = EL.627.5'		
HIGH LIQUID LEVEL ALARM ELEVATION = EL.638.0'		

12 0 1 2 3 4 5
SCALE: 3/8" = 1'-0"

NOTES:

1. FLOOR AND BACK WALL ANTI-SWIRL PLATES, VORTEX SUPPRESSION CONES AND ATTACHMENT BRACKETS SHALL BE DESIGNED AND SUPPLIED BY PUMP MANUFACTURER. COORDINATE FINAL DIMENSIONS WITH PUMP MANUFACTURER.
2. WATER STOPS IN ALL WALL PIPES SHALL BE LOCATED APPROXIMATELY AT THE CENTER OF WALL(S).
3. THE CONTRACTOR SHALL COORDINATE AND PROVIDE ALL FLOOR, WALL AND ROOF OPENINGS PER MANUFACTURER'S REQUIREMENTS TO ENSURE PROPER PUMP INSTALLATION AND FUTURE REMOVAL FOR MAINTENANCE.
4. PUMP DISCHARGE TUBE SHALL BE ALIGNED PER MANUFACTURER'S RECOMMENDED INSTRUCTIONS. ALIGNMENT OF PIPING IS CRITICAL FOR PROPER ALIGNMENT OF PUMP DISCHARGE TUBE. INCLUDE IN THE SHOP DRAWING SUBMITTAL HOW THE CONTRACTOR PLANS TO ACCOMPLISH DISCHARGE TUBE ALIGNMENT.
5. PUMP DIMENSIONS AND DETAILS AS INDICATED MAY VARY WITH THE ACTUAL PUMP SELECTED.
6. SEE STRUCTURAL DRAWINGS FOR DIMENSIONS OF PUMPSTATION STRUCTURES, WALK WAY, LADDER, HANDRAIL AND GRATING DETAILS.
7. SEE STRUCTURAL SHEET FOR TRASH RACK ATTACHMENT TO OPENINGSFOR SUMP.
8. PUMPS SELECTED BY CONTRACTOR SHALL BE INSTALLED WITHIN DIMENSIONS AS INDICATED ON STRUCTURAL AND MECHANICAL DRAWINGS.
9. PUMPS (SWP AND DWP) SHALL HAVE THE CAPABILITY OF BEING INTALLED OR REMOVED WITHOUT ENTERING THE SUMP.
10. PROVIDE UNIONS SO THAT PIPING CAN BE DISASSEMBLED SO THAT THE PUMP LID CAN BE OPENED WITHOUT DESTRUCTION OF PIPING.
11. PUMPS (SWP) SHALL HAVE A MINIMUM LENGTH OF 6" FOR 12" DISCHARGE PIPING ATTACHED TO 24 "PUMP DISCHARGE TUBE.
12. 24" PUMP DISCHARGE TUBE AND TEE SHALL BE INSTALLED THROUGH OPENINGS AS REQUIRED BY MANUFACTURER. SEE NOTES ON SHEET M-04 SECTION A.

US Army Corps of Engineers
Chicago District

SYMBOL	AMENDMENT DESCRIPTION	DATE APPROVED	SYMBOL	DESCRIPTION	DATE APPROVED

DESIGNED BY: BS
DATE: 08-18-2008
DRAWN BY: OJ
SCALE: AS SHOWN
CHECKED BY: UP
SOLICITATION NUMBER: W912P6-08-B-0003
UMER PATEL
SUBMITTED BY:
DATE:

U.S. ARMY ENGINEER DISTRICT
CORPS OF ENGINEERS
CHICAGO, ILLINOIS

DES PLAINES RIVER, ILLINOIS
LOCAL FLOOD PROTECTION
FLOODWALL 37
RIVER RD/MILWAUKEE AVE
PUMP STAION #1
PLAN & SECTIONS

SHEET REFERENCE NUMBER:
M-01
SHEET 121 OF 131

PLOT DATE: 8/18/2008
FILENAME: Dreg37-M1.dgn

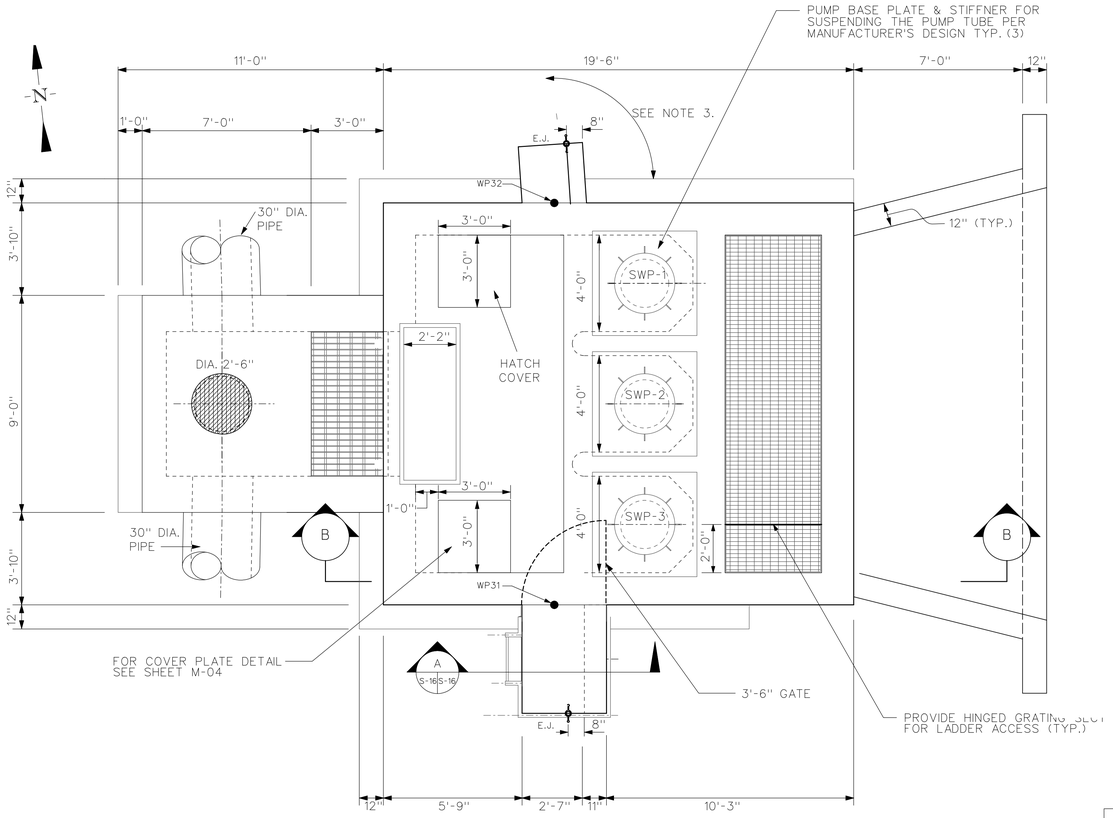

PLAN

SCALE: 3/8" = 1'-0"

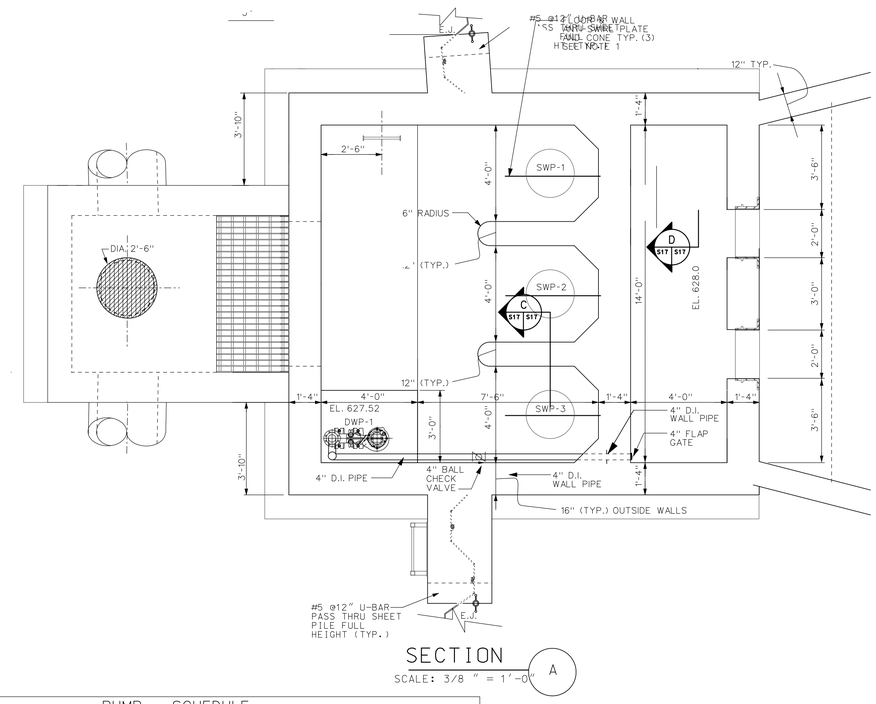

SECTION A

SCALE: 3/8" = 1'-0"

PUMP SCHEDULE							
PUMP NO.	Q GPM	TOTAL HEAD FT H_2O	TOTAL HEAD OPERATING RANGE (FT,H_2O)	VOLTAGE /PHASE	HP	RPM	PUMP DESCRIPTION
SWP-1	2,600	13.3	5' TO 16'	460/3	14	1160	SUBMERSIBLE MIXED FLOW
SWP-2	2,600	13.3	5' TO 16'	460/3	14	1160	SUBMERSIBLE MIXED FLOW
SWP-3	2,600	13.3	5' TO 16'	460/3	14	1160	SUBMERSIBLE MIXED FLOW
DWP-1	200	14	10' TO 17'	460/3	3	1750	SUBMERSIBLE CENTRIFUGAL TYPE

REMARKS: REFER TO SPEC. 15132 FOR REQUIREMENTS

PUMP FLOAT CONTROL SETTINGS		
PUMP No.	RISING WET WELL	FALLING WET WELL
SWP-1	START = EL.631.25	STOP = EL.630.0
SWP-2	START = EL.632.25	STOP = EL.630.5
SWP-3	START = EL.633.25	STOP = EL.631.25
DWP-1	START = EL.628.5	START= EL.631.25
	STOP = EL.631.25	STOP = EL.628.0
BOTTOM OF FLOAT PIPE ELEVATION = EL.628.00' HIGH LIQUID LEVEL ALARM ELEVATION = EL.634.25'		

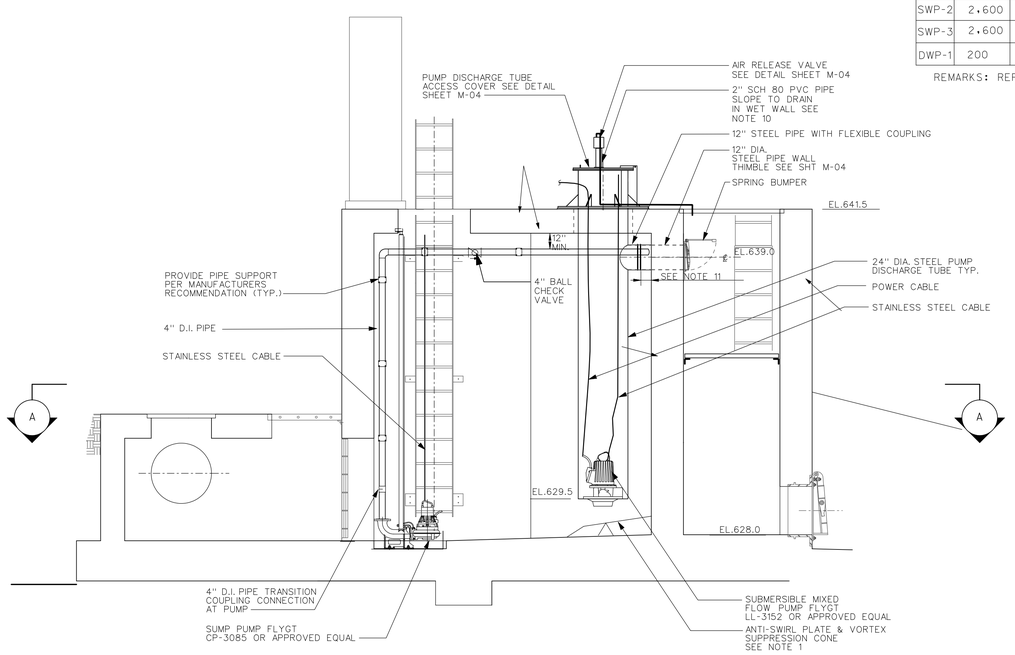

SECTION B

SCALE: 3/8" = 1'-0"

NOTES:

1. FLOOR AND BACK WALL ANTI-SWIRL PLATES, VORTEX SUPPRESSION CONES AND ATTACHMENT BRACKETS SHALL BE DESIGNED AND SUPPLIED BY PUMP MANUFACTURER. COORDINATE FINAL DIMENSIONS WITH PUMP MANUFACTURER.
2. WATER STOPS IN ALL WALL PIPES SHALL BE LOCATED APPROXIMATELY AT THE CENTER OF WALL(S).
3. THE CONTRACTOR SHALL COORDINATE AND PROVIDE ALL FLOOR, WALL AND ROOF OPENINGS PER MANUFACTURER'S REQUIREMENTS TO ENSURE PROPER PUMP INSTALLATION AND FUTURE REMOVAL FOR MAINTENANCE.
4. PUMP DISCHARGE TUBE SHALL BE ALIGNED PER MANUFACTURER'S RECOMMENDED INSTRUCTIONS. ALIGNMENT OF PIPING IS CRITICAL FOR PROPER ALIGNMENT OF PUMP DISCHARGE TUBE. INCLUDE IN THE SHOP DRAWING SUBMITTAL HOW THE CONTRACTOR PLANS TO ACCOMPLISH DISCHARGE TUBE ALIGNMENT.
5. PUMP DIMENSIONS AND DETAILS AS INDICATED MAY VARY WITH THE ACTUAL PUMP SELECTED.
6. SEE STRUCTURAL DRAWINGS FOR DIMENSIONS OF PUMPSTATION STRUCTURES, WALK WAY, LADDER, HANDRAIL AND GRATING DETAILS.
7. SEE STRUCTURAL SHEET FOR TRASH RACK ATTACHMENT TO OPENINGSFOR SUMP.
8. PUMPS SELECTED BY CONTRACTOR SHALL BE INSTALLED WITHIN DIMENSIONS AS INDICATED ON STRUCTURAL AND MECHANICAL DRAWINGS.
9. PUMPS (SWP AND DWP) SHALL HAVE THE CAPABILITY OF BEING INTALLED OR REMOVED WITHOUT ENTERING THE SUMP.
10. PROVIDE UNIONS SO THAT PIPING CAN BE DISASSEMBLED SO THAT THE PUMP LID CAN BE OPENED WITHOUT DESTRUCTION OF PIPING.
11. PUMPS (SWP) SHALL HAVE A MINIMUM LENGTH OF 6" FOR 12" DISCHARGE PIPING ATTACHED TO 24 "PUMP DISCHARGE TUBE.
12. 24" PUMP DISCHARGE TUBE AND TEE SHALL BE INSTALLED THROUGH OPENINGS AS REQUIRED BY MANUFACTURER. SEE NOTES ON SHEET M-04 SECTION A.

12 0 1 2 3 4 5
SCALE: 3/8" = 1'-0"

US Army Corps of Engineers
Chicago District

SYMBOL	AMENDMENT DESCRIPTION	DATE APPROVED	SYMBOL	DESCRIPTION	DATE APPROVED

DESIGNED BY: BS
DRAWN BY: OJ
CHECKED BY: UP
SUBMITTED BY: UMER PATEL
DATE: 08-18-2008
SCALE: AS SHOWN
SOLICITATION NUMBER: W912P6-08-B-0003
DATE:

U.S. ARMY ENGINEER DISTRICT
CORPS OF ENGINEERS
CHICAGO, ILLINOIS

DES PLAINES RIVER, ILLINOIS
LOCAL FLOOD PROTECTION
FLOODWALL 37
RIVER RD/MILWAUKEE AVE
PUMP STATION #2
PLAN & SECTIONS

SHEET REFERENCE NUMBER:
M-02

PLOT DATE: 8/18/2008
FILENAME: Deep37-M2.dgn

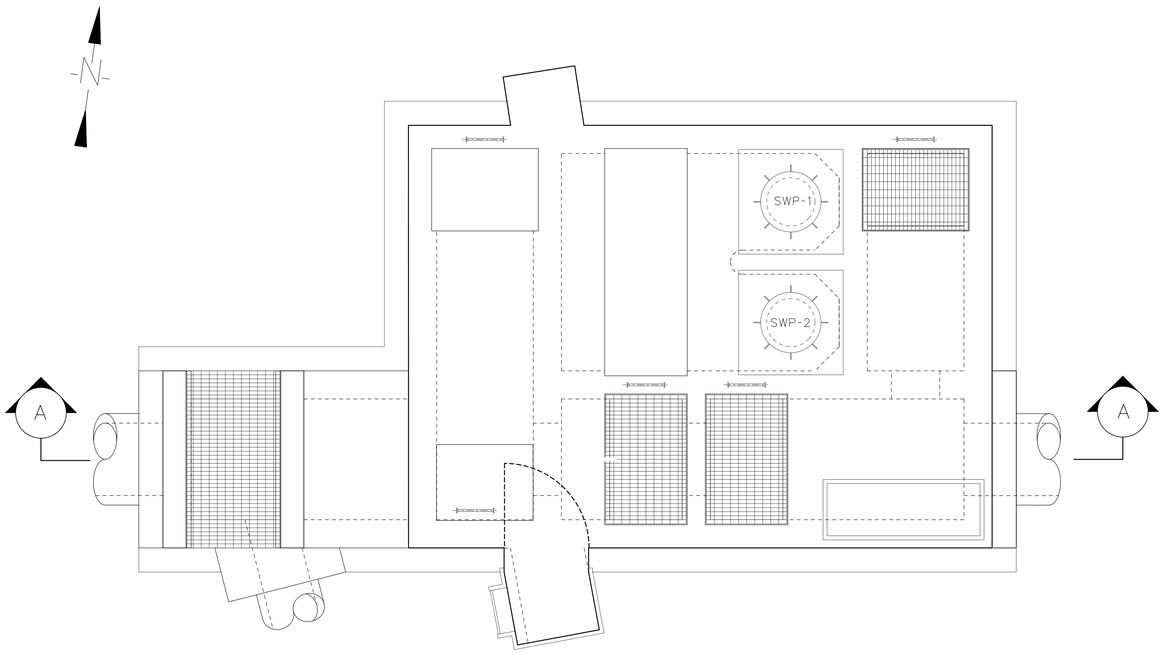

PLAN
SCALE: 3/8" = 1'-0"

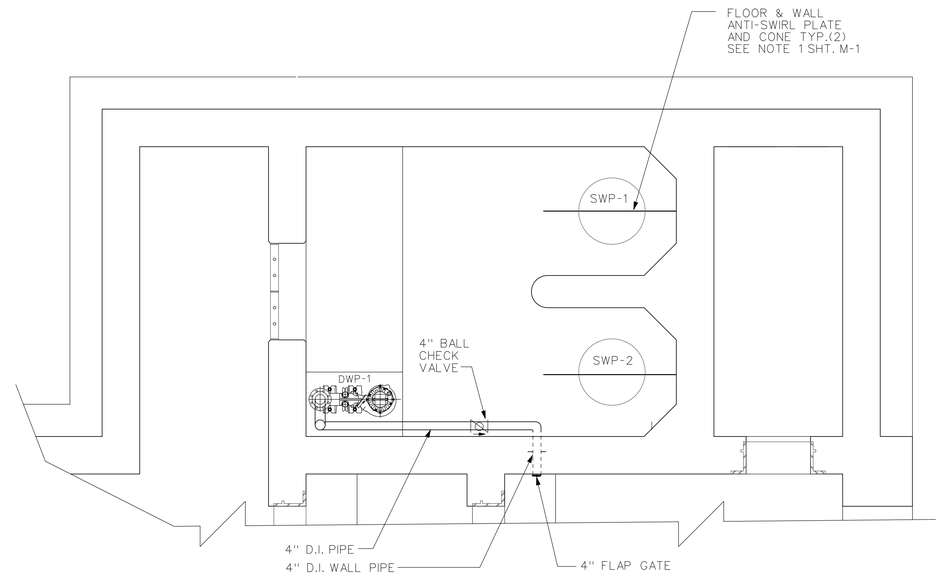

SECTION B
SCALE: 3/8" = 1'-0"

PUMP SCHEDULE							
PUMP NO.	Q GPM	TOTAL HEAD FT H_2O	TOTAL HEAD OPERATING RANGE (FT,H_2O)	VOLTAGE /PHASE	HP	RPM	PUMP DESCRIPTION
SWP-1	2,600	13.3	5' TO 16'	460/3	14	1160	SUBMERSIBLE MIXED FLOW
SWP-2	2,600	13.3	5' TO 16'	460/3	14	1160	SUBMERSIBLE MIXED FLOW
DWP-1	200	12.8	10' TO 17'	460/3	3	1750	SUBMERSIBLE CENTRIFUGAL TYPE

REMARKS: REFER TO SPEC. 15132 FOR REQUIREMENTS

PUMP FLOAT CONTROL SETTINGS		
PUMP No.	RISING WET WELL	FALLING WET WELL
SWP-1	START = EL.633	STOP = EL.631.5
SWP-2	START = EL.635	STOP = EL.632.5
DWP-1	START = EL.632.0	START= EL.631.3
	STOP = EL.629.08	STOP = EL.629.08
BOTTOM OF FLOAT PIPE ELEVATION = EL.629.5' HIGH LIQUID LEVEL ALARM ELEVATION = EL.638.5'		

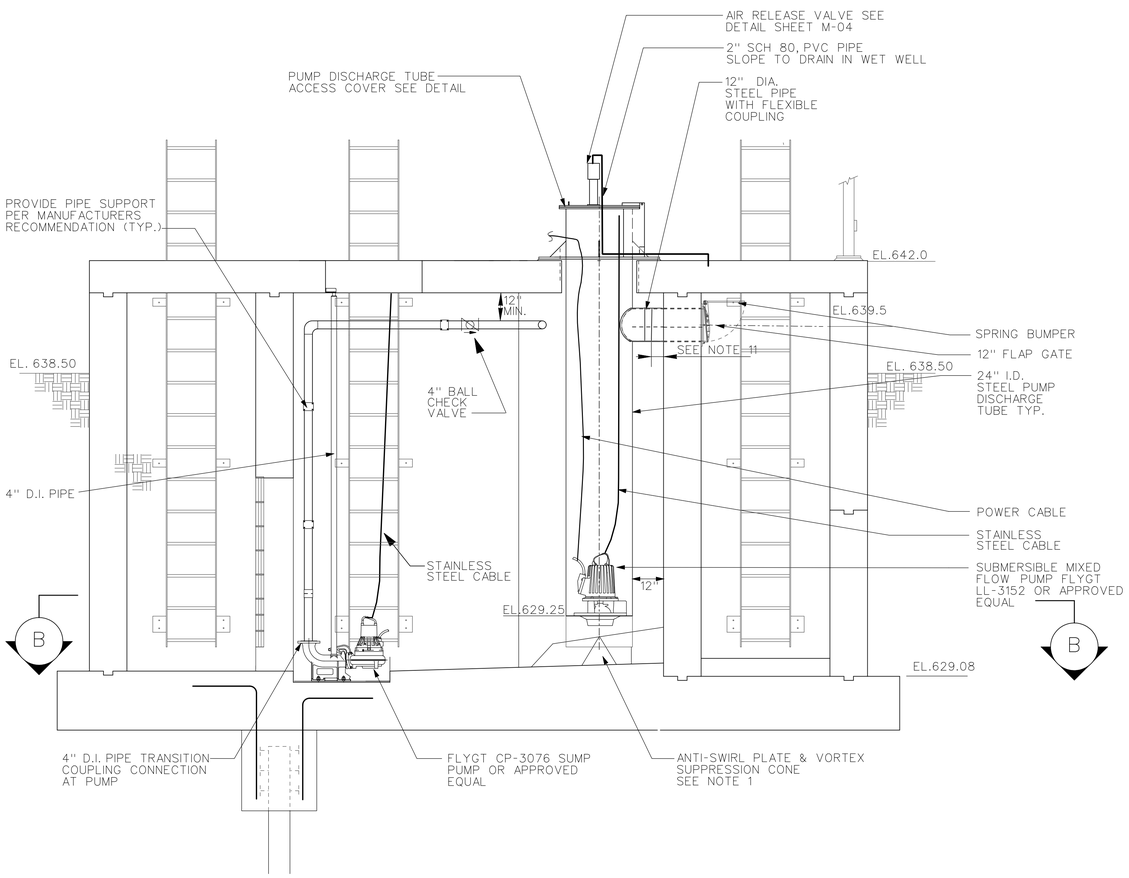

SECTION A
SCALE: 3/8" = 1'-0"

NOTES:

1. FLOOR AND BACK WALL ANTI-SWIRL PLATES, VORTEX SUPPRESSION CONES AND ATTACHMENT BRACKETS SHALL BE DESIGNED AND SUPPLIED BY PUMP MANUFACTURER. COORDINATE FINAL DIMENSIONS WITH PUMP MANUFACTURER.
2. WATER STOPS IN ALL WALL PIPES SHALL BE LOCATED APPROXIMATELY AT THE CENTER OF WALL(S).
3. THE CONTRACTOR SHALL COORDINATE AND PROVIDE ALL FLOOR, WALL AND ROOF OPENINGS PER MANUFACTURER'S REQUIREMENTS TO ENSURE PROPER PUMP INSTALLATION AND FUTURE REMOVAL FOR MAINTENANCE.
4. PUMP DISCHARGE TUBE SHALL BE ALIGNED PER MANUFACTURER'S RECOMMENDED INSTRUCTIONS. ALIGNMENT OF PIPING IS CRITICAL FOR PROPER ALIGNMENT OF PUMP DISCHARGE TUBE. INCLUDE IN THE SHOP DRAWING SUBMITTAL HOW THE CONTRACTOR PLANS TO ACCOMPLISH DISCHARGE TUBE ALIGNMENT.
5. PUMP DIMENSIONS AND DETAILS AS INDICATED MAY VARY WITH THE ACTUAL PUMP SELECTED.
6. SEE STRUCTURAL DRAWINGS FOR DIMENSIONS OF PUMPSTATION STRUCTURES, WALK WAY, LADDER, HANDRAIL AND GRATING DETAILS.
7. SEE STRUCTURAL SHEET FOR TRASH RACK ATTACHMENT TO OPENINGSFOR SUMP.
8. PUMPS SELECTED BY CONTRACTOR SHALL BE INSTALLED WITHIN DIMENSIONS AS INDICATED ON STRUCTURAL AND MECHANICAL DRAWINGS.
9. PUMPS (SWP AND DWP) SHALL HAVE THE CAPABILITY OF BEING INTALLED OR REMOVED WITHOUT ENTERING THE SUMP.
10. PROVIDE UNIONS SO THAT PIPING CAN BE DISASSEMBLED SO THAT THE PUMP LID CAN BE OPENED WITHOUT DESTRUCTION OF PIPING.
11. PUMPS (SWP) SHALL HAVE A MINIMUM LENGTH OF 6" FOR 12" DISCHARGE PIPING ATTACHED TO 24 "PUMP DISCHARGE TUBE.
12. 24" PUMP DISCHARGE TUBE AND TEE SHALL BE INSTALLED THROUGH OPENINGS AS REQUIRED BY MANUFACTURER. SEE NOTES ON SHEET M-04 SECTION A.

US Army Corps of Engineers
Chicago District

SYMBOL	AMENDMENT DESCRIPTION	DATE APPROVED	SYMBOL	DESCRIPTION	DATE APPROVED

DESIGNED BY: BS
DATE: 08-18-2008
DRAWN BY: OJ
SCALE: AS SHOWN
CHECKED BY: UP
SOLICITATION NUMBER: W912P6-08-B-0003
SUBMITTED BY: UMER PATEL
DATE:

U.S. ARMY ENGINEER DISTRICT
CORPS OF ENGINEERS
CHICAGO, ILLINOIS

DES PLAINES RIVER, ILLINOIS
LOCAL FLOOD PROTECTION
FLOODWALL 37
RIVER RD/MILWAUKEE AVE
PUMP STATION #3
PLAN & SECTIONS

SHEET REFERENCE NUMBER:
M-03
SHEET 123 OF 131

PLOT DATE: 8/18/2008
FILENAME: Deep37-M3.dgn

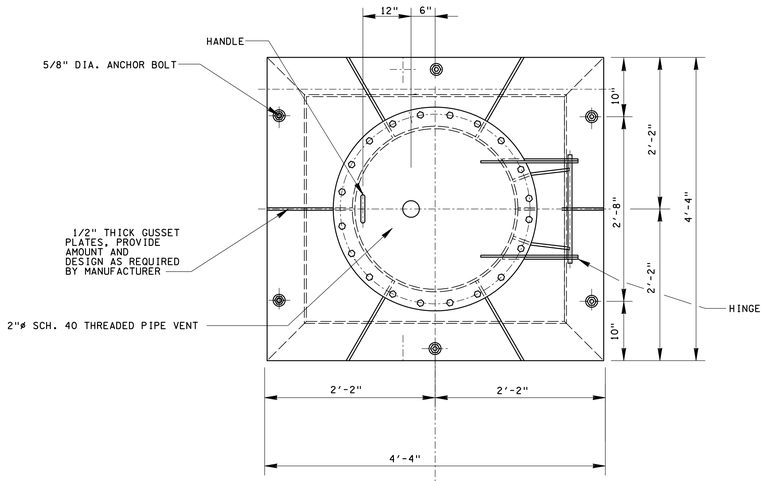

PLAN

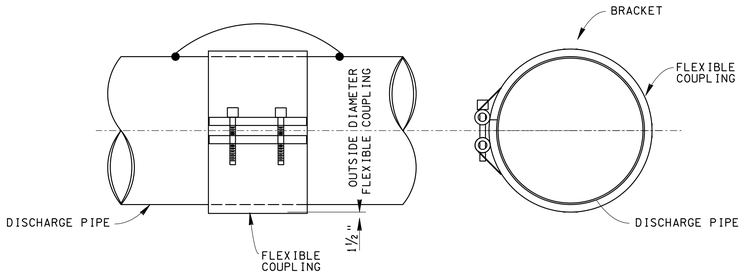

FLEXIBLE COUPLING DETAIL

SCALE: •"=1'-0"

NOTE:
ALL BOLTS & WASHERS TO BE 304 STAINLESS STEEL.

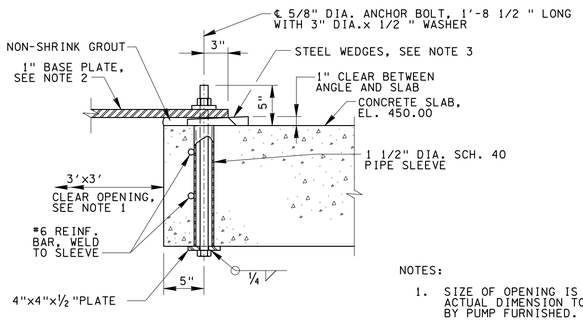

SECTION B/M-3 A/M-3

NOTES:

1. SIZE OF OPENING IS APPROXIMATE, ACTUAL DIMENSION TO BE DETERMINED BY PUMP FURNISHED.
2. BASE PLATE THICKNESS IS MINIMUM, ACTUAL DIMENSION OF BASE PLATE TO BE DETERMINED BY PUMP MANUFACTURER.
3. REMOVABLE STEEL WEDGES ARE USED FOR LEVELING DISCHARGE COLUMN, WEDGE HOLES TO BE GROUTED AFTER WEDGES HAVE BEEN REMOVED.

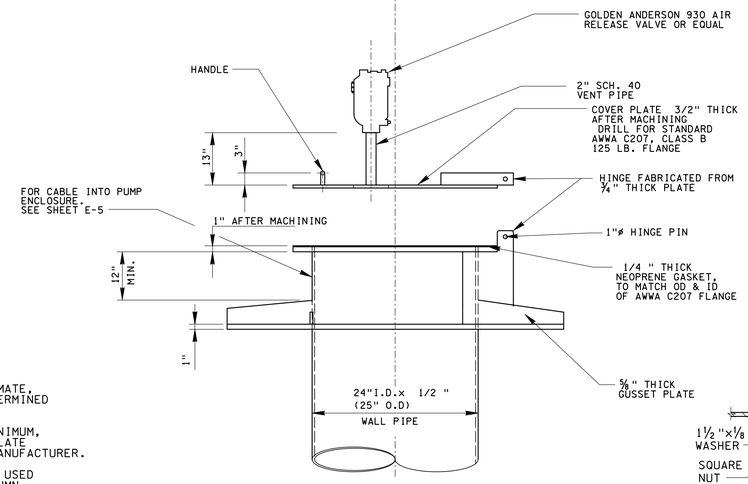

ELEVATION

PUMP ENCLOSURE SUPPORT PLATE

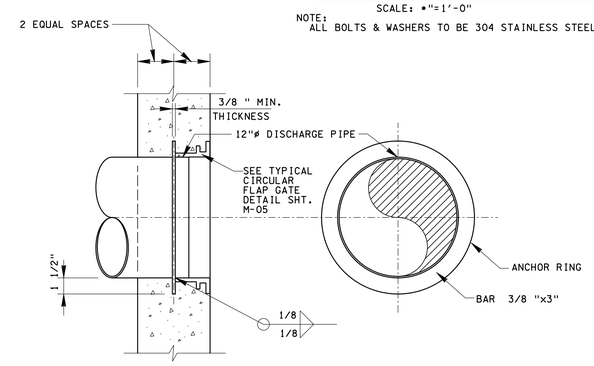

WALL THIMBLE DETAIL

NOTE:
1. SIZES SHOWN ARE MINIMUMS AND SHALL BE IN ACCORDANCE WITH AWWA REQUIREMENTS.
2. STRUCTUAL STEEL PIPE ASTM-36 WITH EPOXY PAINT AS REQUIRED BY SPECIFICATION SECTION 09964.

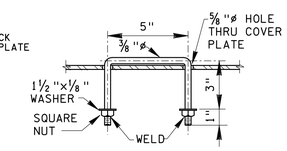

DROP HANDLE

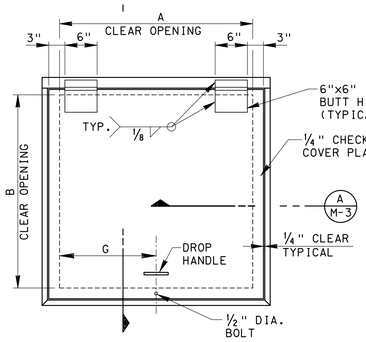

PLAN

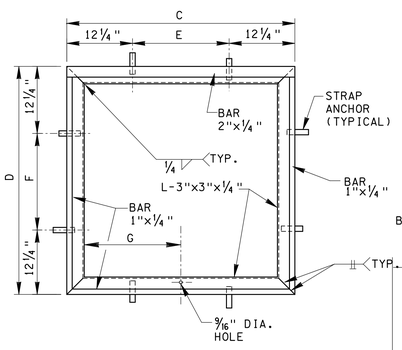

PLAN - FRAME

COVER PLATES

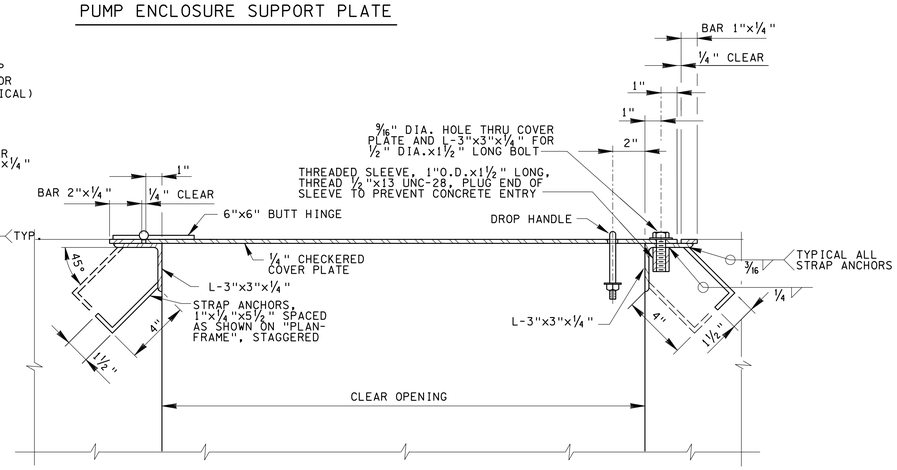

SECTION B/M-3

COVER PLATE SCHEDULE									
COVER PLATE NUMBER	A	B	C	D	E	F	G	NO. REQ'D.	LOCATION
CP-1	3'-0"	3'-0"	3'-6½"	3'-6½"	1'-6"	1'-6"	1'-6"	1	ACCESS LADDER
								1	SUMP PUMP

US Army Corps of Engineers
Chicago District

SYMBOL	AMENDMENT DESCRIPTION	DATE APPROVED	SYMBOL	DESCRIPTION	DATE APPROVED

DESIGNED BY: BS | DATE: 08-18-2008
DRAWN BY: OJ | SCALE: AS SHOWN
CHECKED BY: UP | SOLICITATION NUMBER: W912P6-08-B-0003
SUBMITTED BY: UMER PATEL | DATE:

U.S. ARMY ENGINEER DISTRICT
CORPS OF ENGINEERS
CHICAGO, ILLINOIS

DES PLAINES RIVER, ILLINOIS
LOCAL FLOOD PROTECTION
FLOODWALL 37
RIVER RD/MILWAUKEE AVE
DETAILS & SCHEDULES

SHEET REFERENCE NUMBER:
M-04
SHEET 124 OF 131

PLOT DATE: 8/18/2008
FILENAME: Dreg37-M4.dgn

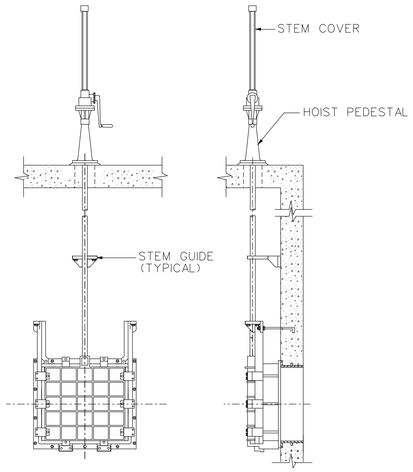

TYPICAL SLUICE GATE DETAIL

N.T.S.

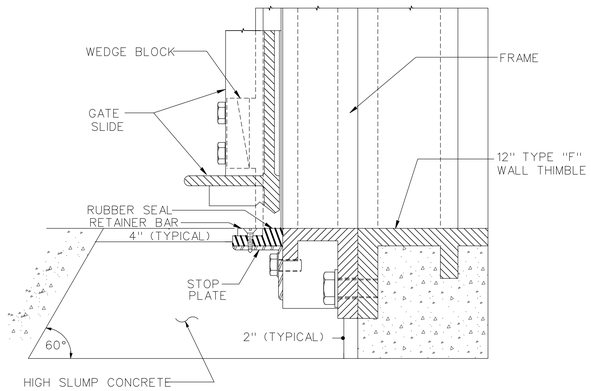

TYPICAL FLUSH BOTTOM
SLUICE GATE ENCLOSURE

N.T.S.

SLUICE GATE SCHEDULE		
GATE LOCATION	No. OF GATES	SIZE (IN.)
PUMP STATION 1/ CLOSURE 1	1	60" X 60"
CLOSURE 2	1	36" X 36"
CLOSURE 3	1	24" X 24"
CLOSURE 4	1	24" X 24"
CLOSURE 5	1	30" X 30"
BACKFLOW STRUCTURE 1	2	30" X 30"
CLOSURE 6 & 7	1 1	30" X 30" 60" X 60"
CLOSURE 8	1	60" X 60"
CLOSURE 9	1	42" X 42"
PUMP STATION 3/ CLOSURE 10	1	36" X 36"

FLAP GATE SCHEDULE		
GATE LOCATION	No. OF GATES	SIZE (IN.)
DWP - PUMPS PUMP STATION 1,2,3	3	4 DIA.
SWP - PUMPS PUMP STATION 1,2,3	7	12 DIA.
PUMP STATION 1/ CLOSURE 1	1	60" X 60"
PUMP STATION 1/ CLOSURE 1	1	24" X 24"
CLOSURE 2	1	36" X 36"
CLOSURE 3	1	24" X 24"
CLOSURE 4	1	24" X 24"
CLOSURE 5	1	30" X 30"
PUMP STATION 2	2	24" X 24"
CLOSURE 6 & 7	1	30" X 30"
CLOSURE 8	1	60" X 60"
CLOSURE 9	1	42" X 42"
PUMP STATION 3/ CLOSURE 10	1 1	36" X 36" 24" X 24"

NOTES:
1. SEE CIVIL AND STRUCTURAL DRAWINGS FOR LOCATION OF GATES.

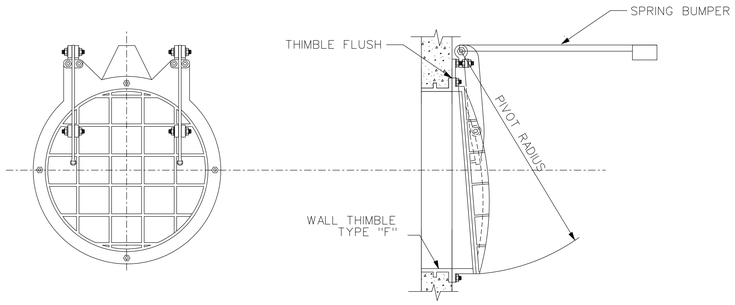

TYPICAL CIRCULAR FLAP GATE DETAIL

N.T.S.

NOTE:
SPRING BUMPER ONLY REQUIRED ON PUMP DISCHARGE PIPELINES

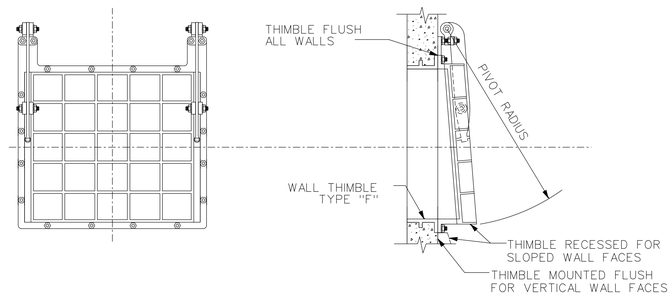

TYPICAL SQUARE FLAP GATE DETAIL

N.T.S.

US Army Corps of Engineers
Chicago District

SYMBOL	AMENDMENT DESCRIPTION	DATE APPROVED	SYMBOL	DESCRIPTION	DATE APPROVED

DESIGNED BY: BS
DATE: 08-18-2008
DRAWN BY: OJ
SCALE: AS SHOWN
CHECKED BY: UP
SOLICITATION NUMBER: W912P6-08-B-0003
SUBMITTED BY: UMER PATEL
DATE:

U.S. ARMY ENGINEER DISTRICT
CORPS OF ENGINEERS
CHICAGO, ILLINOIS

DES PLAINES RIVER, ILLINOIS
LOCAL FLOOD PROTECTION
FLOODWALL 37
RIVER RD/MILWAUKEE AVE

DETAILS & SCHEDULES

SHEET REFERENCE NUMBER:
M-05

SHEET 125 OF 131

PLOT DATE: 8/18/2008
FILENAME: Deep37-M5.dgn

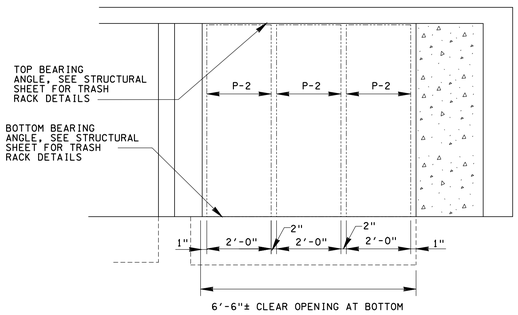

ELEVATION

(SHOWING PANEL LAYOUT)
SCALE: ½"=1'-0"

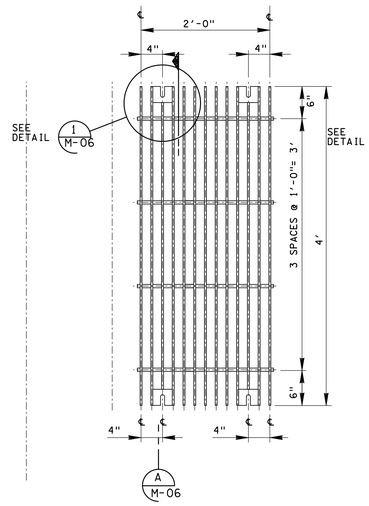

ELEVATION

(PANELS P-1 & P-2)
SCALE: 1"=1'-0"

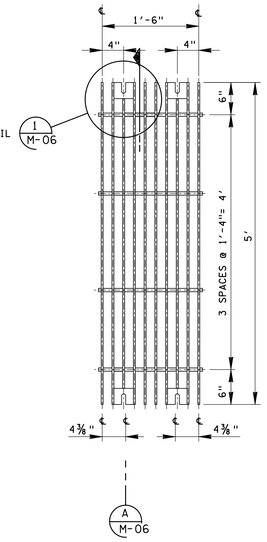

ELEVATION

(PANELS P-1)
SCALE: 1"=1'-0"

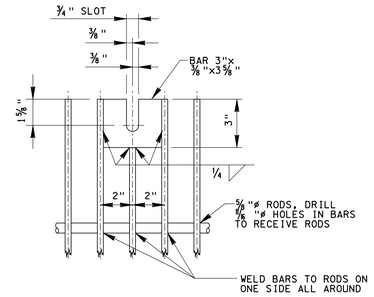

DETAIL

SCALE: 3"=1'-0" (1 / M-06)

TRASH RACK DETAILS

(PANELS P-1 THRU P-4)

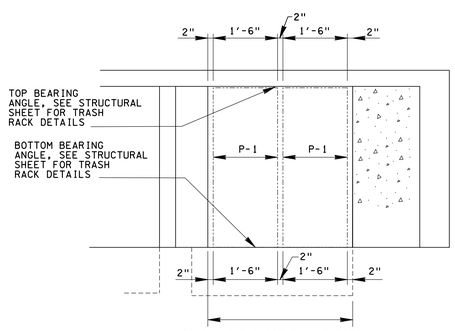

ELEVATION

(SHOWING PANEL LAYOUT)
SCALE: ½"=1'-0"

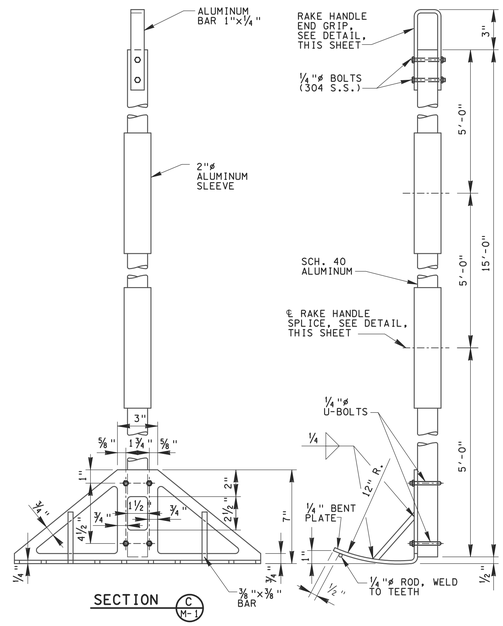

SECTION

(C / M-1)

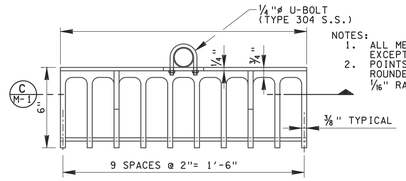

NOTES:
1. ALL METAL TO BE STRUCTURAL STEEL EXCEPT WHERE OTHERWISE NOTED.
2. POINTS OF TEETH AND ALL CORNERS ROUNDED TO ELIMINATE SHARP EDGES, ⅛" RADIUS.

TRASH RAKE DETAIL

REQUIRED: 2
SCALE: 3"=1'-0"

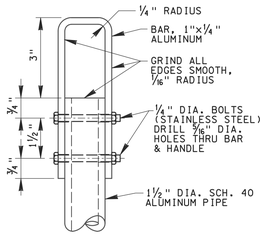

RAKE HANDLE END GRIP

SCALE: 6"=1'-0"
REQUIRED: 1

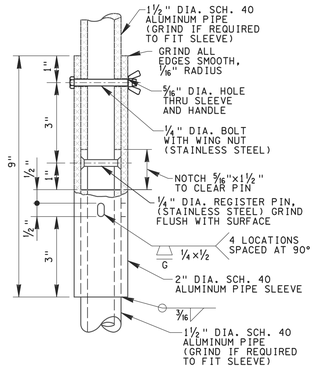

RAKE HANDLE SPLICE

REQUIRED: 3
SCALE: 6"=1'-0"

US Army Corps of Engineers
Chicago District

SYMBOL	AMENDMENT DESCRIPTION	DATE APPROVED	SYMBOL	DESCRIPTION	DATE APPROVED

DESIGNED BY: MVN
DRAWN BY: MVN
CHECKED BY: JT
DATE: 08-18-2008
SCALE: AS SHOWN
SOLICITATION NUMBER: W912P6-08-B-0003
SUBMITTED BY: JAY TANAKA
DATE:

U.S. ARMY ENGINEER DISTRICT
CORPS OF ENGINEERS
CHICAGO, ILLINOIS

DES PLAINES RIVER, ILLINOIS
LOCAL FLOOD PROTECTION
FLOODWALL 37
RIVER RD/MILWAUKEE AVE

TRASH RACK AND RAKE DETAILS

SHEET REFERENCE NUMBER:
M-06

PLOT DATE: 8/18/2008
FILENAME: Dreg37-M6.dgn

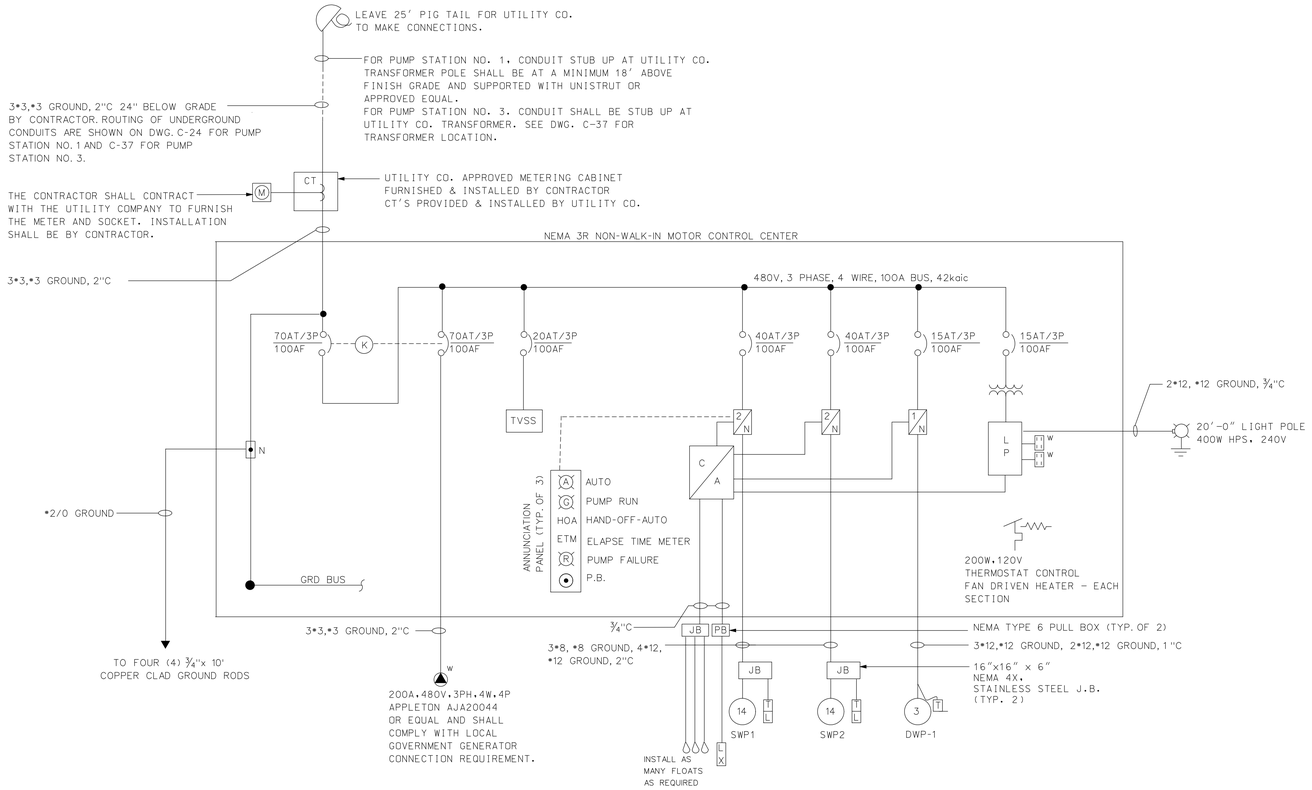

MOTOR CONTROL CENTER ONE-LINE DIAGRAM

PUMP STATION No. 1 & 3

ELECTRICAL NOTES:

1. THE HORSEPOWER FOR THE STORM WATER PUMPS MAY VARY WITH THE FINAL PUMP SELECTION. THE CONTRACTOR SHALL MAKE ALL THE REQUIRED CHANGES TO THE ELECTRICAL SYSTEM AND EQUIPMENT IF THE RATING ARE DIFFERENT FROM WHAT IS SHOWN ON THE DRAWINGS AT NO COST TO THE GOVERNMENT.
2. MOTOR CONTROL CIRCUITS SHALL BE DESIGNED TO OPERATE ON PUMP CONTROLLER AND FLOAT SWITCHES BACK-UP CONTROL SYSTEM AND IN ACCORDANCE WITH THE OPERATION SCHEDULE AS INDICATED ON THE MECHANICAL DRAWING OF EACH STATION. EACH CIRCUIT SHALL INCLUDE MOTOR PROTECTIONS AND SHUT DOWN AS REQUIRES BY THE PUMP MANUFACTURER AND AT ANYTIME, NO TWO PUMPS SHALL START AT THE SAME TIME. THE SCHEMATIC AND INTERCONNECTION DIAGRAMS BETWEEN THESE EQUIPMENT SHALL BE SUBMITTED AT THE SAME TIME FOR REVIEW PRIOR TO CONSTRUCTION AND INSTALLATION.
3. LEVEL SENSORS MOUNTING LOCATION SHOWN ON DRAWING MAY VARY. THEY SHALL BE MOUNTED PER MANUFACTURER'S RECOMMENDATION TO INSURE PROPER OPERATION.
4. ALL CABLES IN THE WET WELL AREA SHALL RIGIDLY SUPPORTED PER MANUFACTURER'S RECOMMENDATION AND AS APPROVED. CABLES SHALL BE OF SUFFICIENT LENGTH TO REACH THE JB/MCC WITHOUT NEED OF ANY SPLICES.
5. THE SIZE AND ARRANGEMENT OF EQUIPMENT IN THE MOTOR CONTROL CENTER (MCC) MAY BE CHANGED TO PROPERLY INSTALL ALL EQUIPMENT WITHIN THE MCC CONTRACTOR SHALL SUBMIT MCC FOR APPROVAL.
6. PUMP CONTROLLER.
   a.) ALL INTERNAL COMPONENTS OF THE PUMP CONTROLLER AND TELEMETRY UNIT ARE NOT SHOWN. SEE SPECIFICATIONS FOR DETAIL.
   b.) PUMP CONTROLLER SHALL INTERFACE WITH THE MOTOR LEAKAGE AND OVERHEAT SENSOR OF EACH PUMP PROVIDED BY THE PUMP MOTOR MANUFACTURER AND TO STOP THE PUMP AND ANNUNCIATE.
   c.) FLOAT SWITCHES BACK-UP CONTROL NOT SHOWN. THE PUMP CONTROLLER SHALL INCLUDE A FLOAT BACK-UP WITH AUTOMATIC SWITCH OVER AND ALARM/ANNUNCIATE SHOULD THE MAIN CONTROLLER FAIL. ALL COMPONENTS AND WIRING NEEDED TO INTERFACE THE BACK-UP CONTROLLER/TRANSDUCER SHALL BE PROVIDED AS REQUIRED.
7. PUMPS, PIPING AND STRUCTURE ARE SHOWN HERE FOR REFERENCE ONLY. REFER TO STRUCTURAL AND MECHANICAL DRAWINGS FOR DIMENSIONS AND DETAILS.
8. SEE SECTION 16415 FOR COMMERCIAL POWER SERVICE.

LEGEND:

- UTILITY CO. METER
- 40AT/3P 100AF — CIRCUIT BREAKER: 40 AMP TRIP/3 POLES 100 AMP FRAME
- MAGNETIC MOTOR STARTER. NEMA SIZE 2. FULL VOLTAGE. NON REVERSING
- PUMP CONTROLLER AND ALARM CABINE
- LEVEL TRANSDUCER
- FLOAT SWITCHES
- THERMAL SWITCH IN MOTOR
- 3KW.480-240/120VAC.1PH TRANSFORMER
- 120 VOLTS, 15 AMP WEATHERPROOF GFCI DUPLEX RECEPTACLE
- THERMAL & LEAK DETECTION SWITCHES IN MOTOR
- GREEN INDICATING LIGHT
- RED ALARM LIGHT
- HAND-OFF-AUTO HEAVY DUTY OIL TIGHT DELECTOR SWITCH MINIMUM 1-3/16" DIAMETER
- ELAPSE TIME METER
- LIGHTING PANEL 60A MAIN, 240/120VAC.1 PH 12 CIRCUITS MINIMUM
- FUSE
- TVSS — TRANSIENT VOLTAGE SURGE SUPPRESSOR
- HEAVY DUTY WEATHERPROOF WEATHERPROOF GENERATOR RECEPTACLE
- 14 — MOTOR HORSEPOWER
- JB — NEMA 4X STAINLESS STEEL JUNCTION BOX
- 20 FOOT LIGHT POLE
- THERMOSTAT CONTROL FAN DRIVEN HEATER SIMILAR TO HOFFMAN D-AH2001A ELECTRIC HEATER
- PUSH BUTTON
- KIRK KEY INTERLOCK TO PERMIT ONLY 1 BREAKER TO BE CLOSED AT ONE TIME AND MAY BE OFF (OPEN) AT THE SAME TIME.
- GROUND

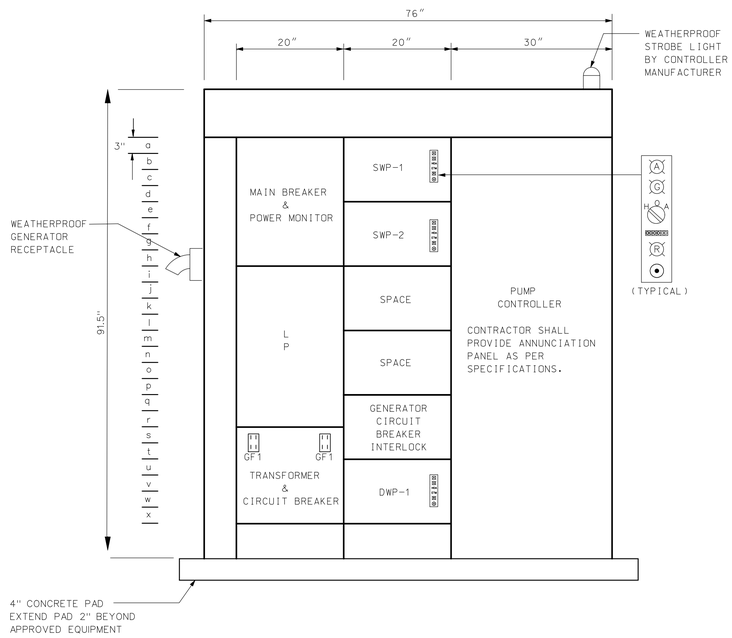

NEMA 3R NON-WALK-IN MOTOR CONTROL CENTER

LOCKABLE DOORS NOT SHOWN: ALLOW MINIMUM 42" CLEARANCE IN FRONT OF MCC
(CONCEPTUAL DESIGN)
N.T.S.

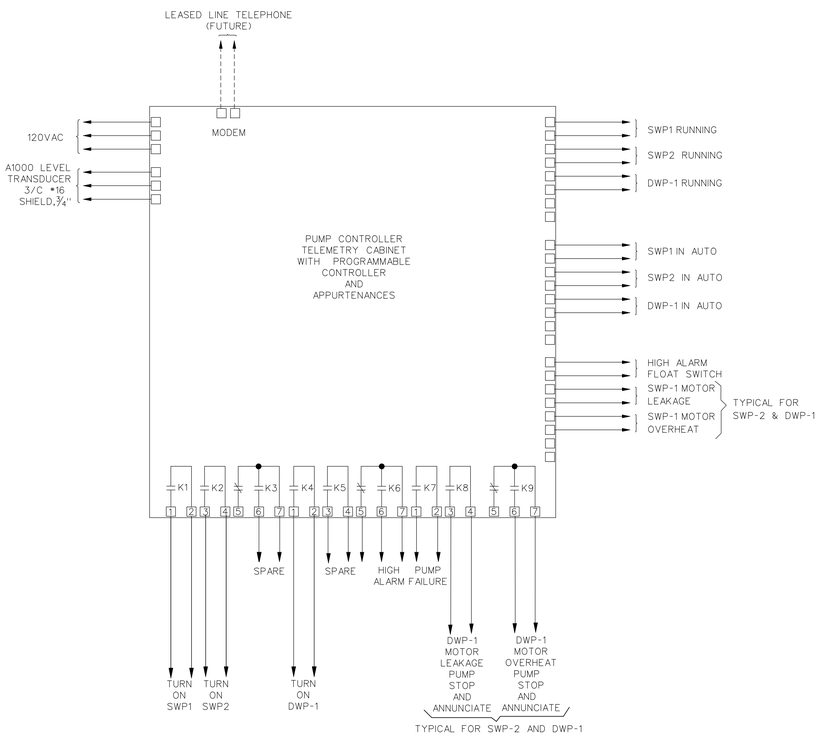

PUMP CONTROLLER DIAGRAM

(BASED ON U.S. FILTER CONTROL SYSTEM)
SEE NOTE 2 AND 6
NTS

US Army Corps of Engineers Chicago District

SYMBOL	AMENDMENT DESCRIPTION	DATE APPROVED	SYMBOL	DESCRIPTION	DATE APPROVED

DESIGNED BY: EG
DATE: 08-18-2008
DRAWN BY: DJ
SCALE: AS SHOWN
CHECKED BY: ST
SOLICITATION NUMBER: W912P6-08-B-0003
SUBMITTED BY: STEVE TREHARNE, P.E.
DATE:

U.S. ARMY ENGINEER DISTRICT
CORPS OF ENGINEERS
CHICAGO, ILLINOIS

DES PLAINES RIVER, ILLINOIS
LOCAL FLOOD PROTECTION
FLOODWALL 37
RIVER RD/MILWAUKEE AVE
ELECTRICAL SYSTEM PUMP STATION NO. 1 & 3 MCC, ONE-LINE DIAGRAM & CONTROLLER DIAGRAM

SHEET REFERENCE NUMBER:
E-01
SHEET 127 OF 131

PLOT DATE: 8/18/2008
FILENAME: Deep37-E1.dgn

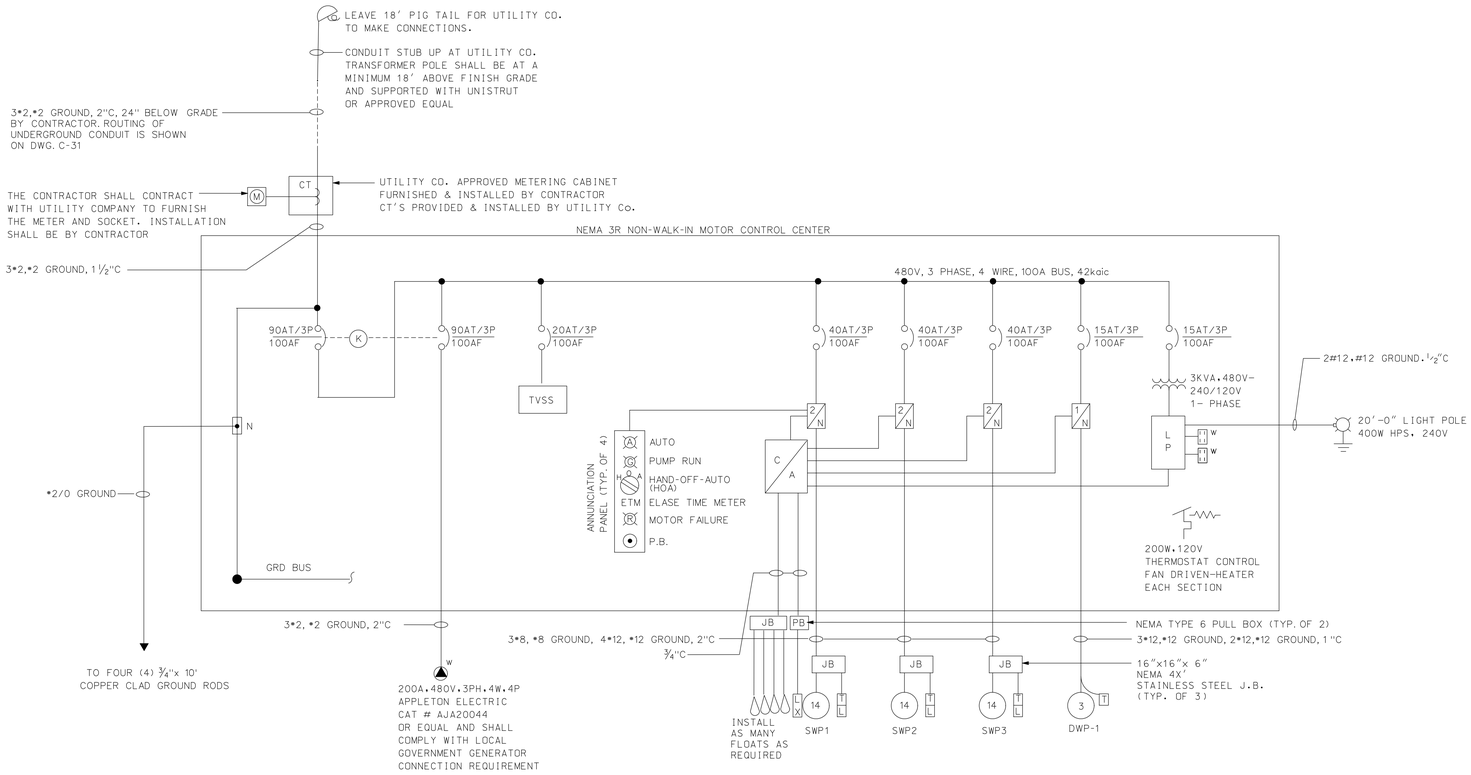

MOTOR CONTROL CENTER ONE-LINE DIAGRAM

PUMP STATION No. 2

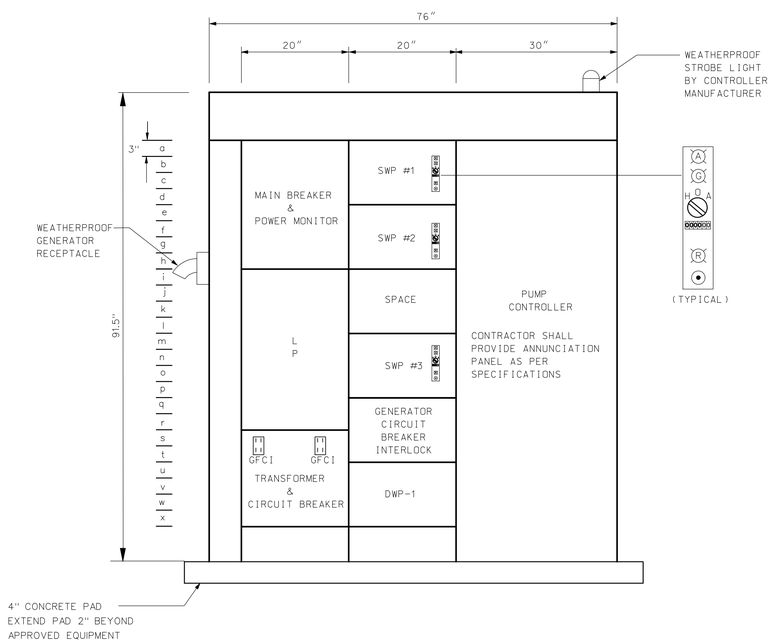

NEMA 3R NON-WALK-IN MOTOR CONTROL CENTER

LOCKABLE DOORS NOT SHOWN: ALLOW MINIMUM 42" CLEARANCE IN FRONT OF MCC
(CONCEPTUAL DESIGN)
N.T.S.

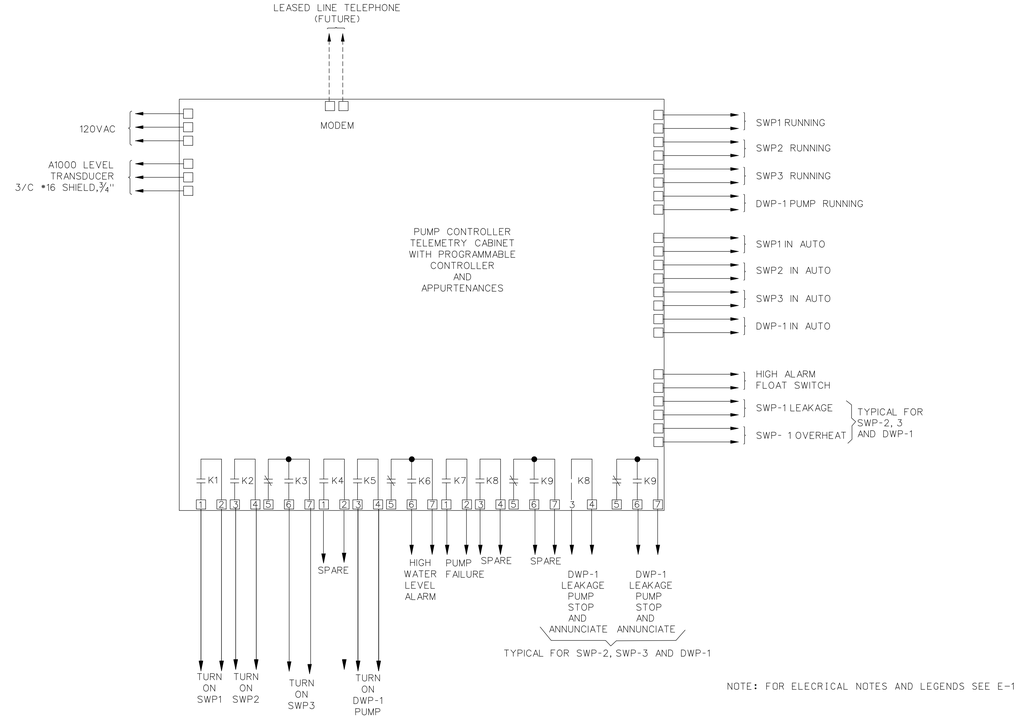

NOTE: FOR ELECRICAL NOTES AND LEGENDS SEE E-1

PUMP CONTROLLER DIAGRAM

(BASED ON U.S. FILTER CONTROL SYSTEM)
SEE NOTE 2 AND 6 ON E-01
NTS

US Army Corps of Engineers
Chicago District

SYMBOL	AMENDMENT DESCRIPTION	DATE APPROVED	SYMBOL	DESCRIPTION	DATE APPROVED

DESIGNED BY: EG
DATE: 08-18-2008
DRAWN BY: OJ
SCALE: AS SHOWN
CHECKED BY: ST
SOLICITATION NUMBER: W912P6-08-B-0003
SUBMITTED BY: STEVE TREHARNE, P.E.
DATE:

U.S. ARMY ENGINEER DISTRICT
CORPS OF ENGINEERS
CHICAGO, ILLINOIS

DES PLAINES RIVER, ILLINOIS
LOCAL FLOOD PROTECTION
FLOODWALL 37
RIVER RD/MILWAUKEE AVE
ELECTRICAL SYSTEM PUMP STATION NO. 2. MCC, ONE-LINE DIAGRAM & CONTROLLER DIAGRAM

SHEET REFERENCE NUMBER:
E-02

PLOT DATE: 8/18/2008
FILENAME: Deep37-E2.dgn

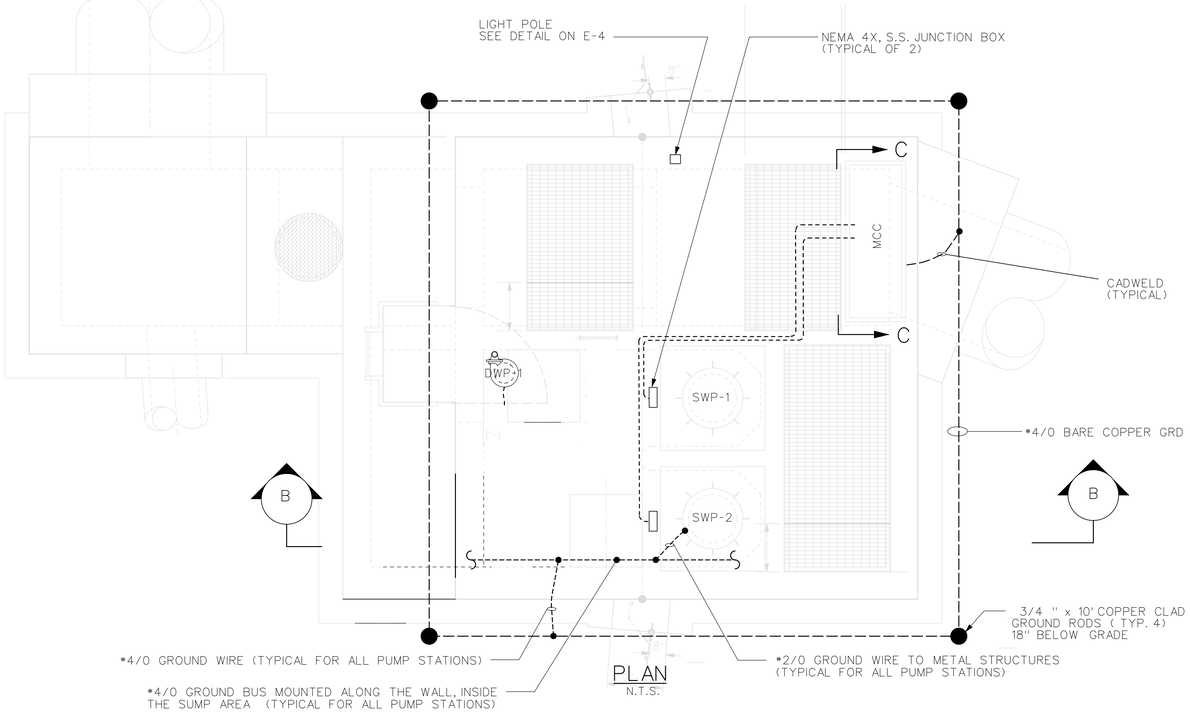

PLAN
N.T.S.

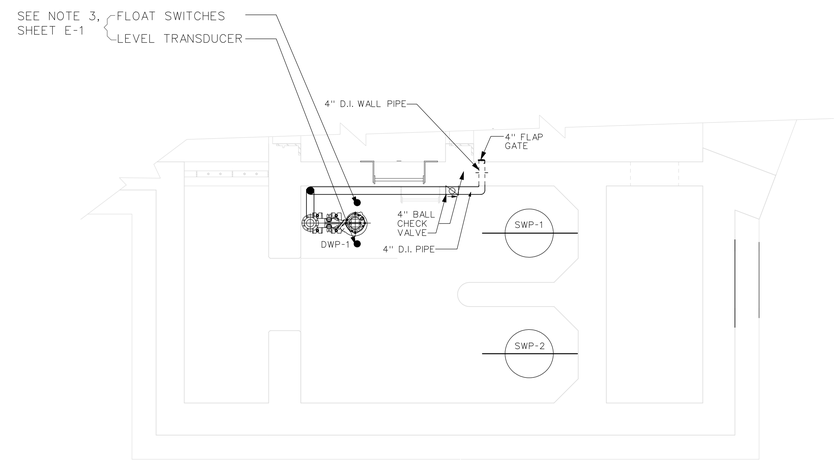

SECTION A
N.T.S.

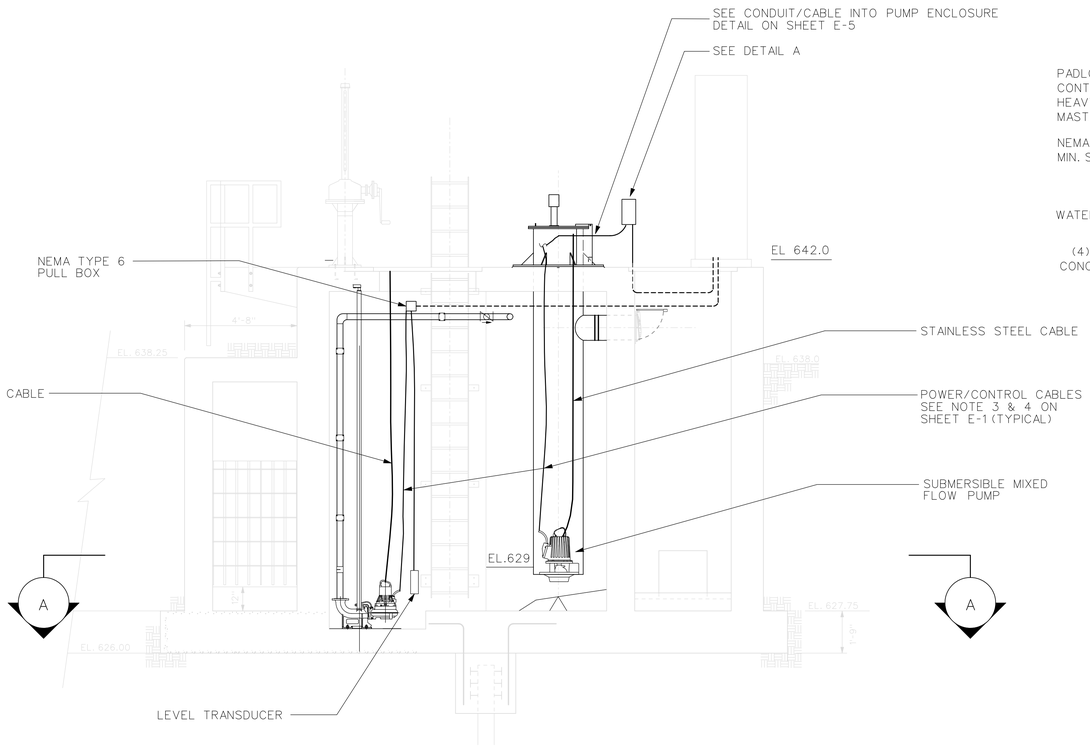

SECTION B
N.T.S.

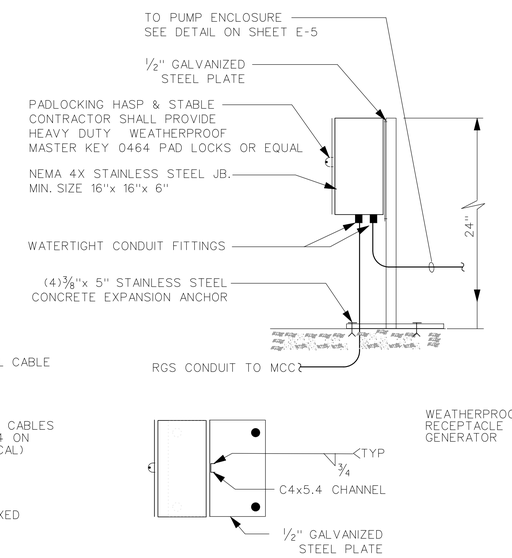

DETAIL A
N.T.S

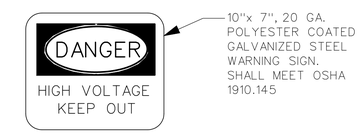

10"x 7", 20 GA.
POLYESTER COATED
GALVANIZED STEEL
WARNING SIGN.
SHALL MEET OSHA
1910.145

DETAIL C
N.T.S

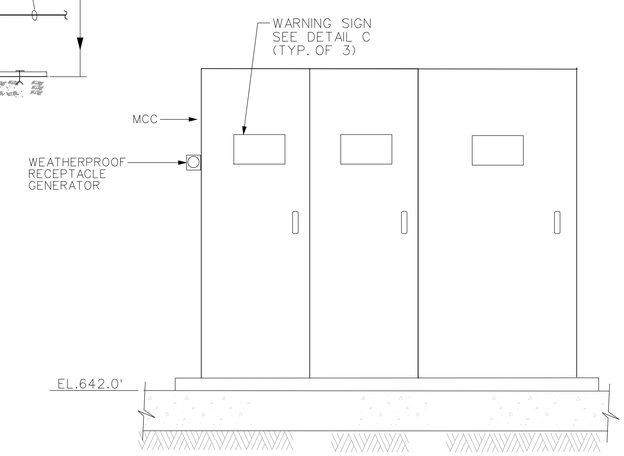

SECTION C

N.T.S
NOTE: FOR ELECTRICAL NOTES AND LEGEND SEE E-1.

US Army Corps of Engineers
Chicago District

SYMBOL	AMENDMENT DESCRIPTION	DATE APPROVED	SYMBOL	DESCRIPTION	DATE APPROVED

DESIGNED BY: EG
DATE: 08-18-08
DRAWN BY: OJ
SCALE: AS SHOWN
CHECKED BY: ST
SOLICITATION NUMBER: W912P6-08-B-0003
STEVE TREHARNE, P.E.
SUBMITTED BY:
DATE:

U.S. ARMY ENGINEER DISTRICT
CORPS OF ENGINEERS
CHICAGO, ILLINOIS

DES PLAINES RIVER, ILLINOIS
LOCAL FLOOD PROTECTION
FLOODWALL 37
RIVER RD/MILWAUKEE AVE
ELECTRICAL SYSTEM
PUMP STATION NO.1
PLAN, SECTION & DETAILS

SHEET REFERENCE NUMBER:
E-03
SHEET 129 OF 131

PLOT DATE: 8/18/2008
FILENAME: Dresp37-E3.dgn

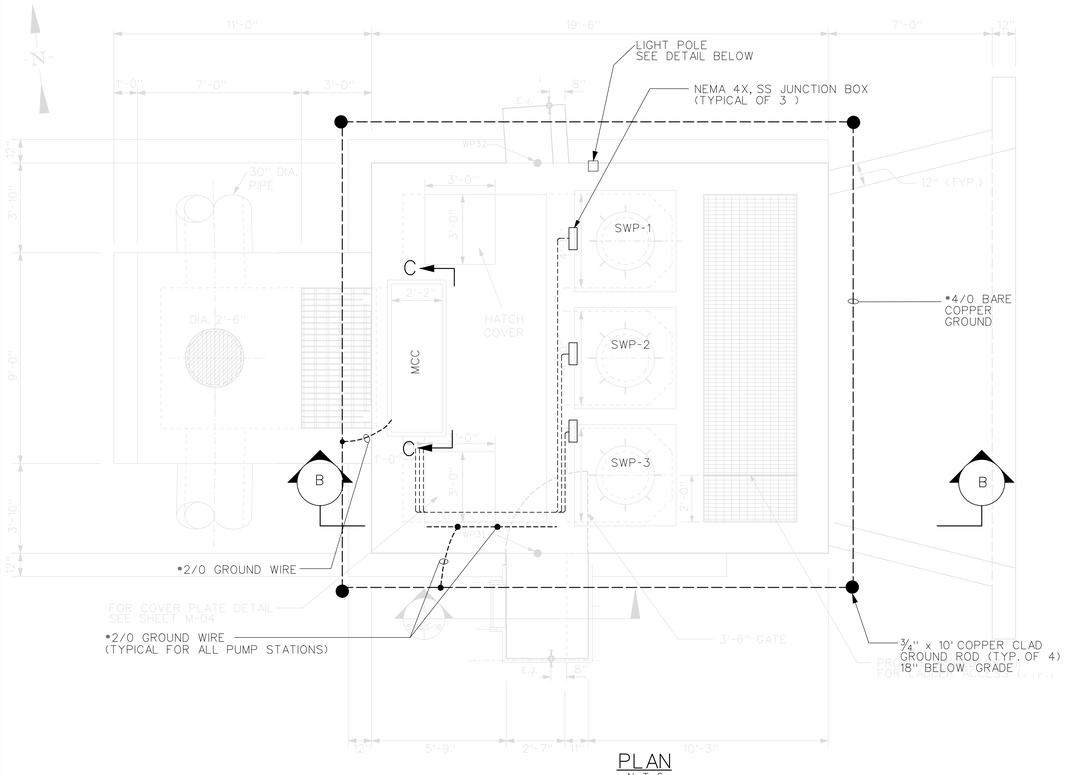

PLAN
N.T.S.

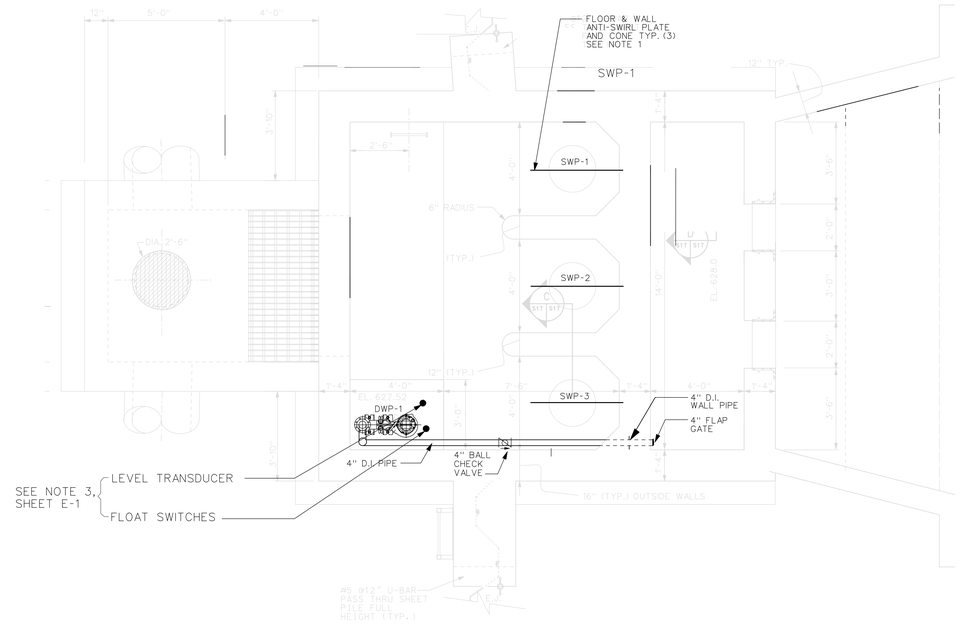

SECTION A
N.T.S.

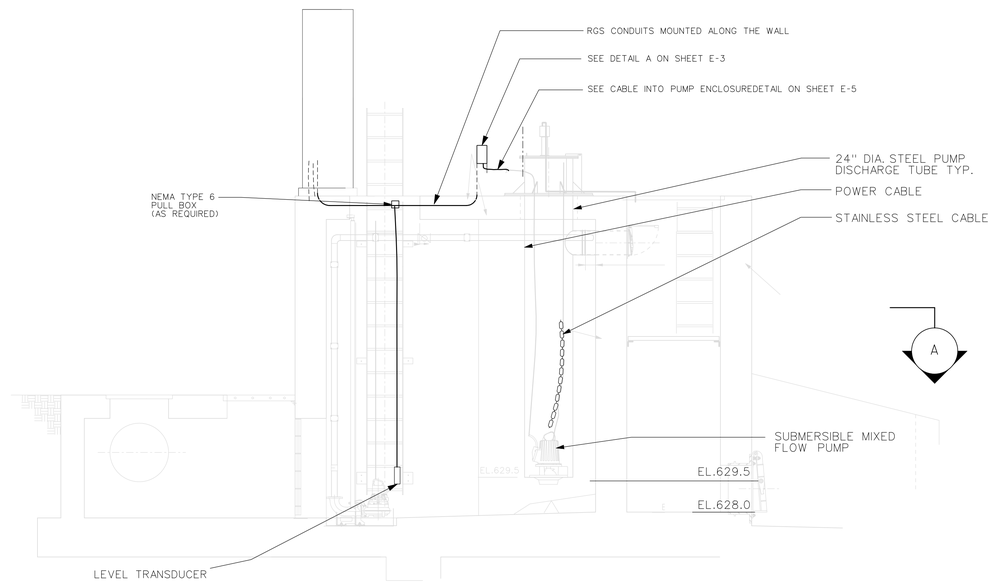

SECTION B
N.T.S.

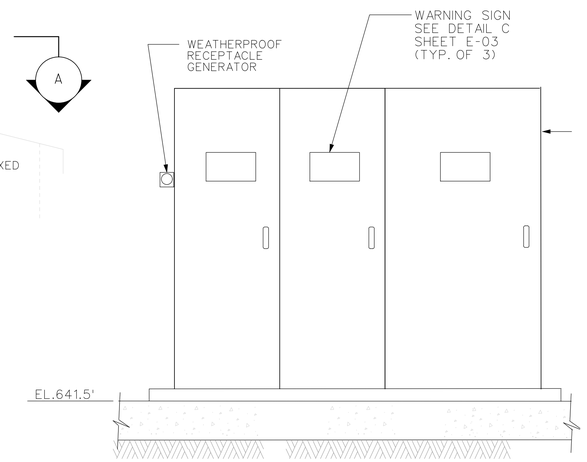

SECTION C
N.T.S

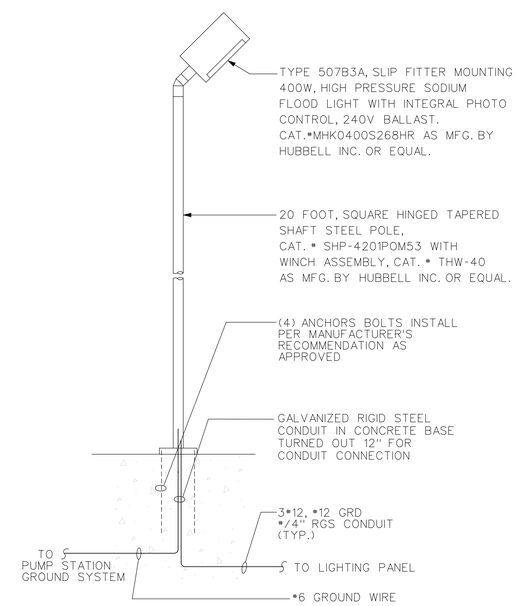

LIGHT POLE DETAIL
N.T.S.

NOTE: FOR ELECTRICAL NOTES AND LEGEND SEE E-1

US Army Corps of Engineers
Chicago District

SYMBOL	AMENDMENT DESCRIPTION	DATE APPROVED	SYMBOL	DESCRIPTION	DATE APPROVED

DESIGNED BY: EG | DATE: 08-18-2008
DRAWN BY: OJ | SCALE: AS SHOWN
CHECKED BY: ST | SOLICITATION NUMBER: W912P6-08-B-0003
SUBMITTED BY: STEVE TREHARNE, P.E. | DATE:

U.S. ARMY ENGINEER DISTRICT
CORPS OF ENGINEERS
CHICAGO, ILLINOIS

DES PLAINES RIVER, ILLINOIS
LOCAL FLOOD PROTECTION
FLOODWALL 37
RIVER RD/MILWAUKEE AVE
ELECTRICAL SYSTEM
PUMP STATION NO.2
PLAN, SECTIONS & DETAILS

SHEET REFERENCE NUMBER:
E-04
SHEET 130 OF 131

PLOT DATE: 8/18/2008
FILENAME: Dmp37-E4.dgn

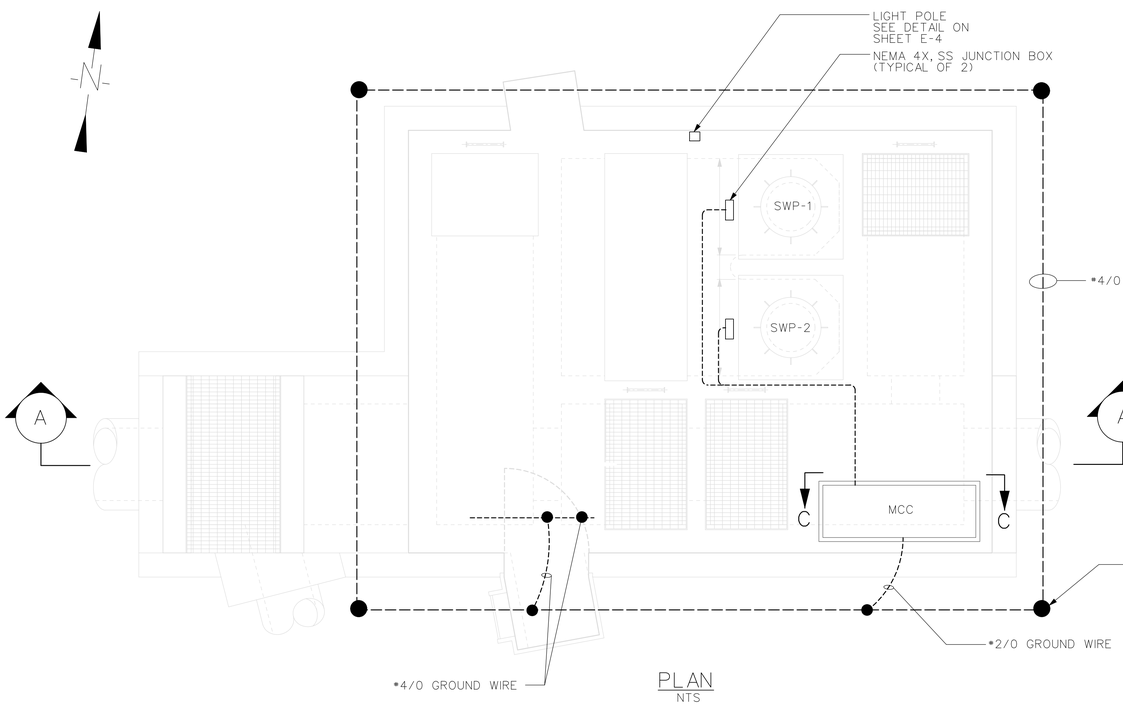

PLAN
NTS

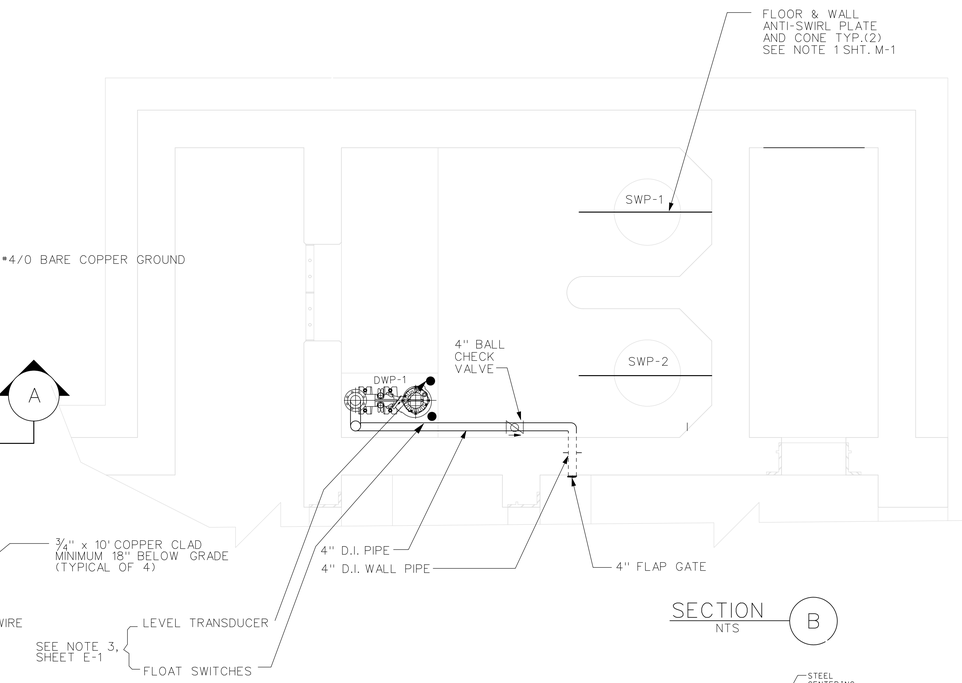

SECTION B
NTS

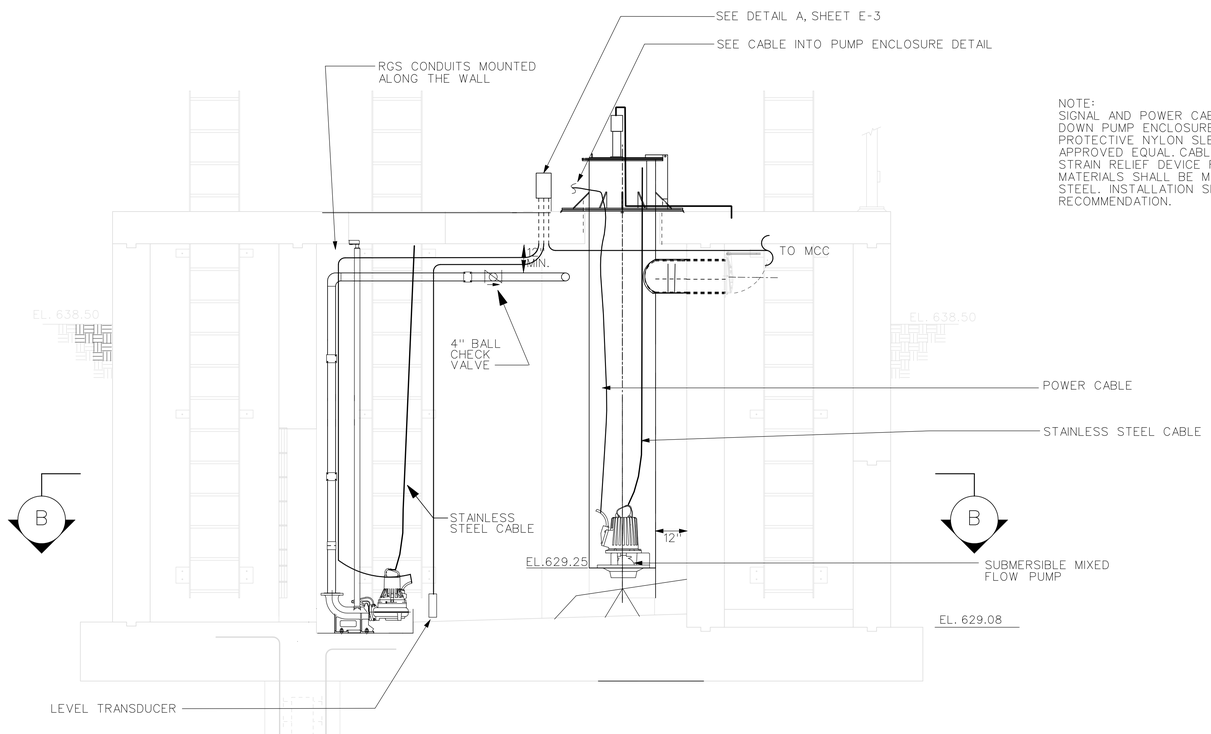

SECTION A
NTS

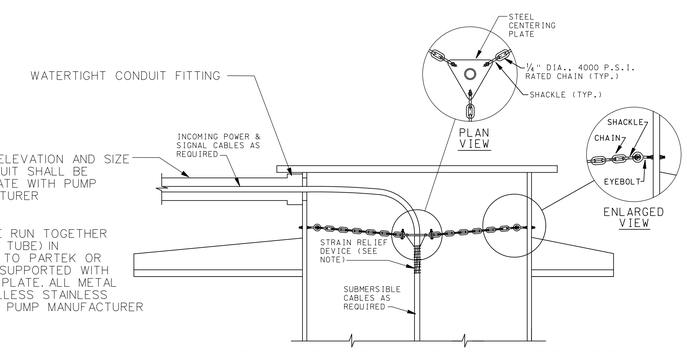

NOTE:
SIGNAL AND POWER CABLE SHALL BE RUN TOGETHER DOWN PUMP ENCLOSURE (DISCHARGE TUBE) IN PROTECTIVE NYLON SLEEVE SIMILAR TO PARTEK OR APPROVED EQUAL. CABLE SHALL BE SUPPORTED WITH STRAIN RELIEF DEVICE FROM METAL PLATE. ALL METAL MATERIALS SHALL BE MADE OF STAILLESS STAINLESS STEEL. INSTALLATION SHALL BE PER PUMP MANUFACTURER RECOMMENDATION.

CABLE INTO PUMP ENCLOSURE DETAIL
SCALE: NONE

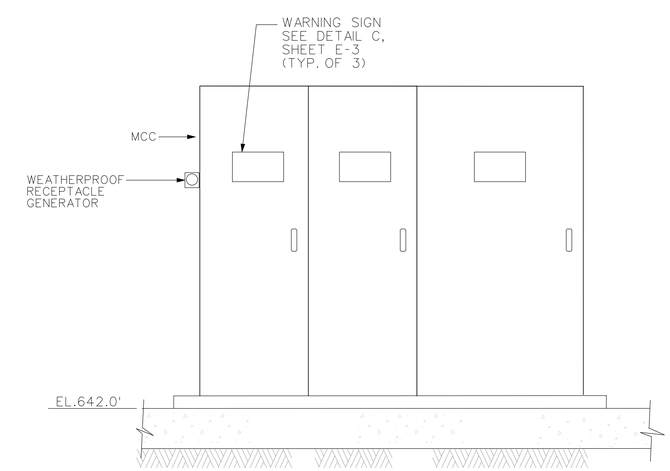

SECTION C
N.T.S

NOTE: FOR ELECTRICAL NOTES AND LEGEND SEE E-1.

US Army Corps of Engineers
Chicago District

SYMBOL	AMENDMENT DESCRIPTION	DATE APPROVED	SYMBOL	DESCRIPTION	DATE APPROVED

DESIGNED BY: EG
DATE: 08-08-2008
DRAWN BY: OJ
SCALE: AS SHOWN
CHECKED BY: ST
SOLICITATION NUMBER: W912P6-08-B-0003
SUBMITTED BY: STEVE TREHARNE, P.E.
DATE:

U.S. ARMY ENGINEER DISTRICT
CORPS OF ENGINEERS
CHICAGO, ILLINOIS

DES PLAINES RIVER, ILLINOIS
LOCAL FLOOD PROTECTION
FLOODWALL 37
RIVER RD/MILWAUKEE AVE
ELECTRICAL SYSTEM
PUMP STATION NO.3
PLAN, SECTIONS & DETAILS

SHEET REFERENCE NUMBER:
E-05
SHEET 131 OF 131

PLOT DATE: 8/18/2008
FILENAME: Dreg37-E5.dgn