REVISIONS				
SYMBOL	ZONE	DESCRIPTION	DATE	BY
1		REVISED AS-BUILT	10/21/96	RAC

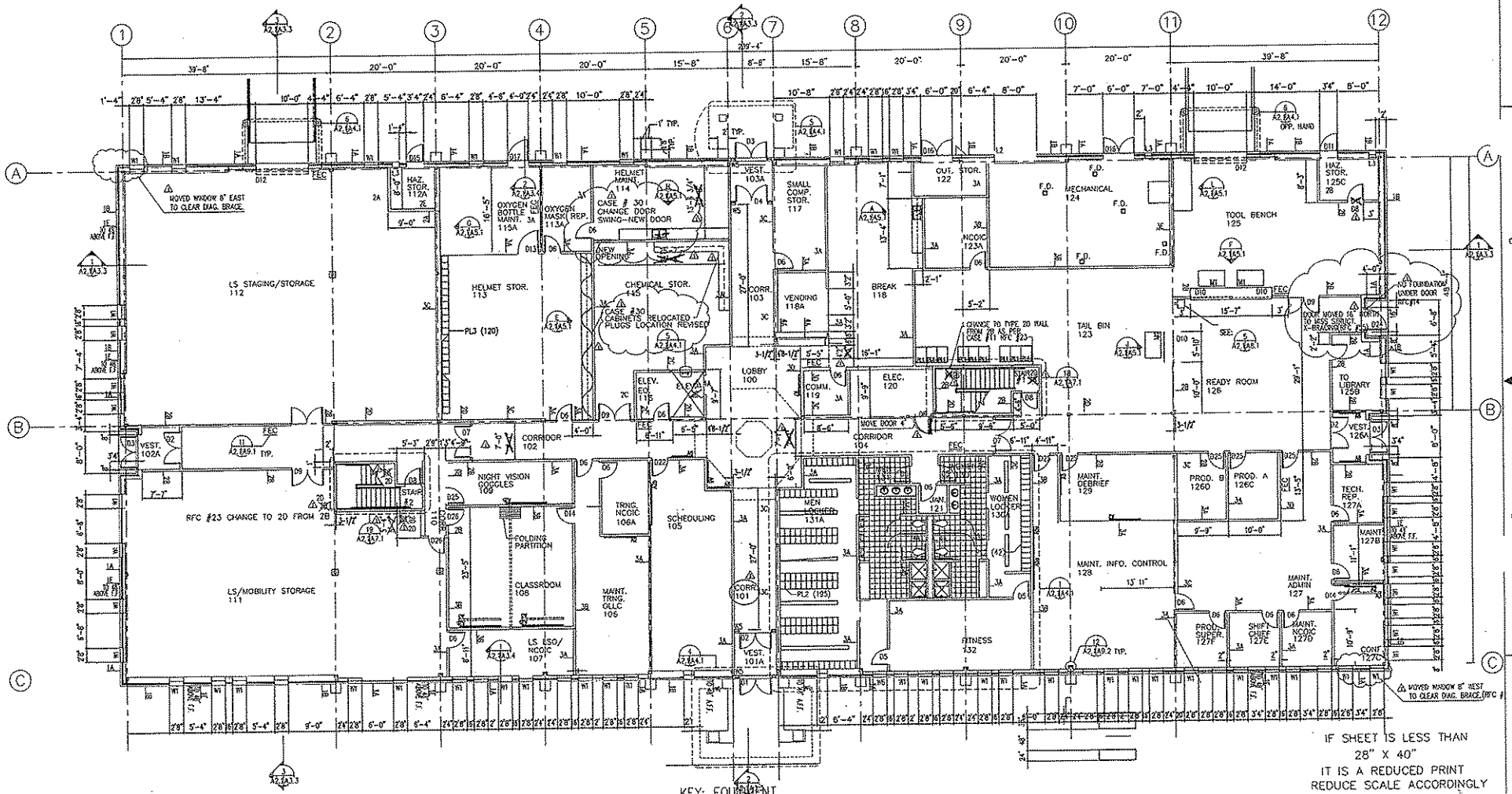

KEY: EQUIPMENT

A2	DRY ERASE BOARD 72"W X 48"H SEE: 14-A2.1/A9.1
A2a	DRY ERASE BOARD 48"W X 36"H SEE: 14-A2.1/A9.1
A2b	DRY ERASE BOARD 96"W X 48"H SEE: 14-A2.1/A9.1
A3	RECESSED PROJECTION SCREEN
A5	BULLETIN BOARD 48"W X 36"H SEE: 14-A2.1/A9.1 - FOR PLACEMENT
A5a	BULLETIN BOARD 72"W X 48"H SEE: 14-A2.1/A9.1 - FOR PLACEMENT
A6	BULLETIN BOARD W/ GLASS DOORS 48"W X 36"H SEE: 13-A2.1/A9.1
A7	BUILDING DIRECTORY SEE: 10-A2.1/A9.5
PL1	LOCKERS 24"W X 36"D X 72"H - PT-2
PL2	LOCKERS 12"W X 18"D X 36"H - PT-2
PL3	LOCKERS 15"W X 15"D X 15"H - PT-2
N3	

IF SHEET IS LESS THAN 28" X 40" IT IS A REDUCED PRINT REDUCE SCALE ACCORDINGLY

TRUE NORTH FOR REFERENCE TO SITE ONLY

PROJECT NORTH

0 4' 8' 16' 1/8" = 1'-0"

REGISTERED ARCHITECT

RAUH P. OLSEN STATE OF WASHINGTON

RUA ARCHITECTS-ENGINEERS SEATTLE, WASHINGTON

U.S. ARMY ENGINEER DISTRICT, SEATTLE CORPS OF ENGINEERS SEATTLE, WASHINGTON

FIRST FLOOR PLAN
SQUADRON OPERATIONS
AIRCRAFT MAINTENANCE UNIT
FAIRCHILD AFB WASHINGTON

SIZE F | INVITATION NO. | FILE NO. 236a/141-10-05 | DATE 13 JULY 95 | PLATE A2.1

DRN. AMC | CHK. MT | SHEET 25

A2.1

AS-BUILT

FIRST FLOOR PLAN

F.F. 100'-0"

BLDG. 2005

REVISIONS				
SYMBOL	ZONE	DESCRIPTION	DATE	BY
1		REVISED AS-BUILT	10/21/96	RAC

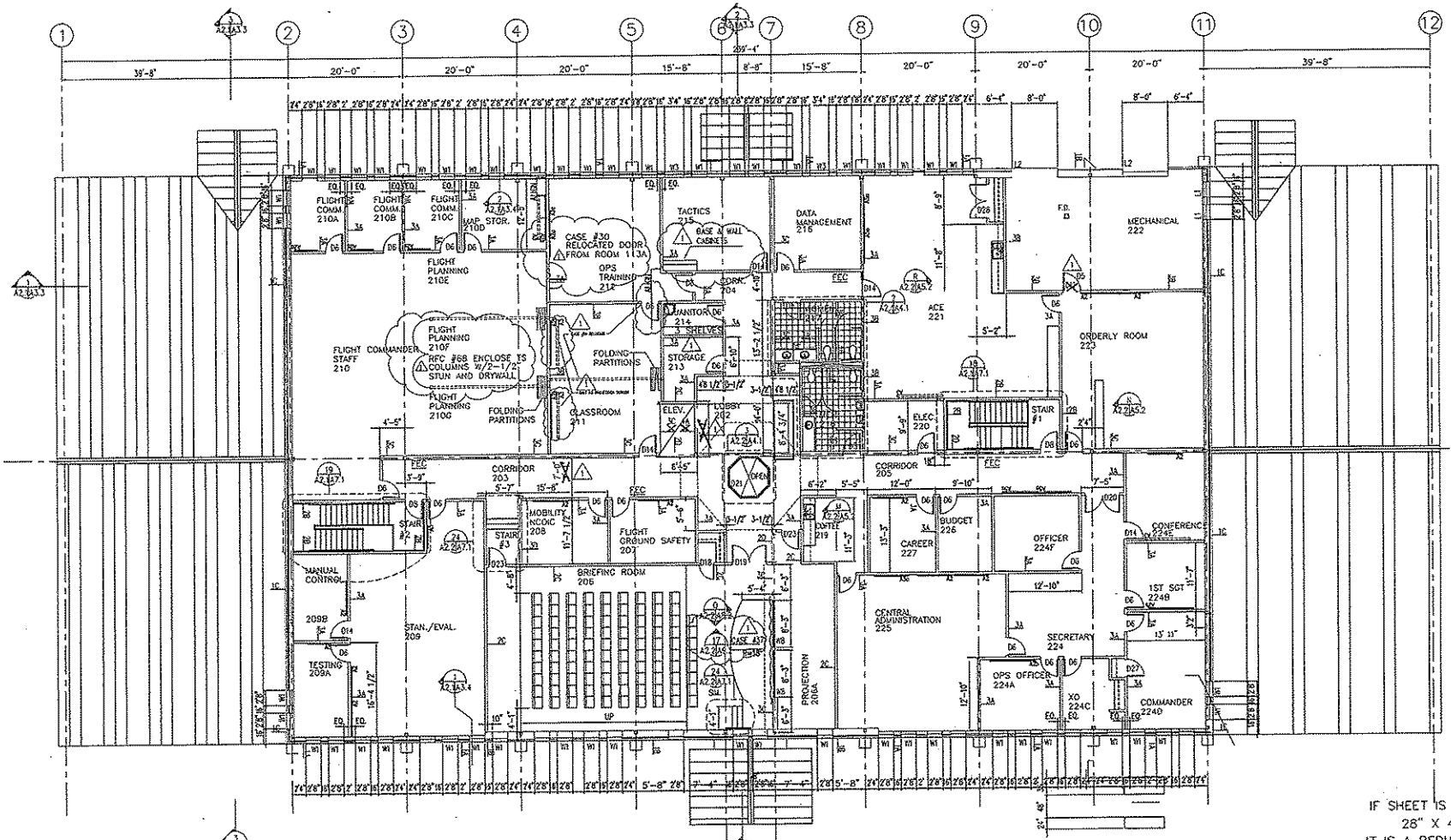

SECOND FLOOR PLAN

F.F. 114'-0"

BLDG. 2005

KEY: EQUIPMENT

A2 DRY ERASE BOARD 72"W X 48"H SEE: 14-A2.1/A9.1
A2a DRY ERASE BOARD 48"W X 36"H SEE: 14-A2.1/A9.1
A2b DRY ERASE BOARD 96"W X 48"H SEE: 14-A2.1/A9.1
A3 RECESSED PROJECTION SCREEN
A5 BULLETIN BOARD 48"W X 36"H SEE: 14-A2.1/A9.1 - FOR PLACEMENT
A5a BULLETIN BOARD 72"W X 48"H SEE: 14-A2.1/A9.1 - FOR PLACEMENT
A6 BULLETIN BOARD W/ GLASS DOORS 48"W X 36"H SEE: 13-A2.1/A9.1
A7 BUILDING DIRECTORY
PL1 LOCKERS 24"W X 36"D X 72"H
PL2 LOCKERS 12"W X 18"D X 36"H
PL3 LOCKERS 15"W X 15"D X 15"H

PROJECT NORTH

0 4' 8' 16' 1/8" = 1'-0"

REGISTERED ARCHITECT
DANIEL P. CALLAN
STATE OF WASHINGTON

IF SHEET IS LESS THAN 28" X 40" IT IS A REDUCED PRINT REDUCE SCALE ACCORDINGLY

W/A ARCHITECTS-ENGINEERS SEATTLE, WASHINGTON

U.S. ARMY ENGINEER DISTRICT, SEATTLE CORPS OF ENGINEERS SEATTLE, WASHINGTON

SECOND FLOOR PLAN
SQUADRON OPERATIONS
AIRCRAFT MAINTENANCE UNIT
FAIRCHILD AFB WASHINGTON

SIZE	DRAWING NO.	FILE NO.	DATE	PLATE
F		236s/141-10-05	13 JULY 95	A2.2
FROM: AMC		CHK: MT	SHEET 26	

A2.2

AS-BUILT

TRUNK LAYOUT – BLDG.2005

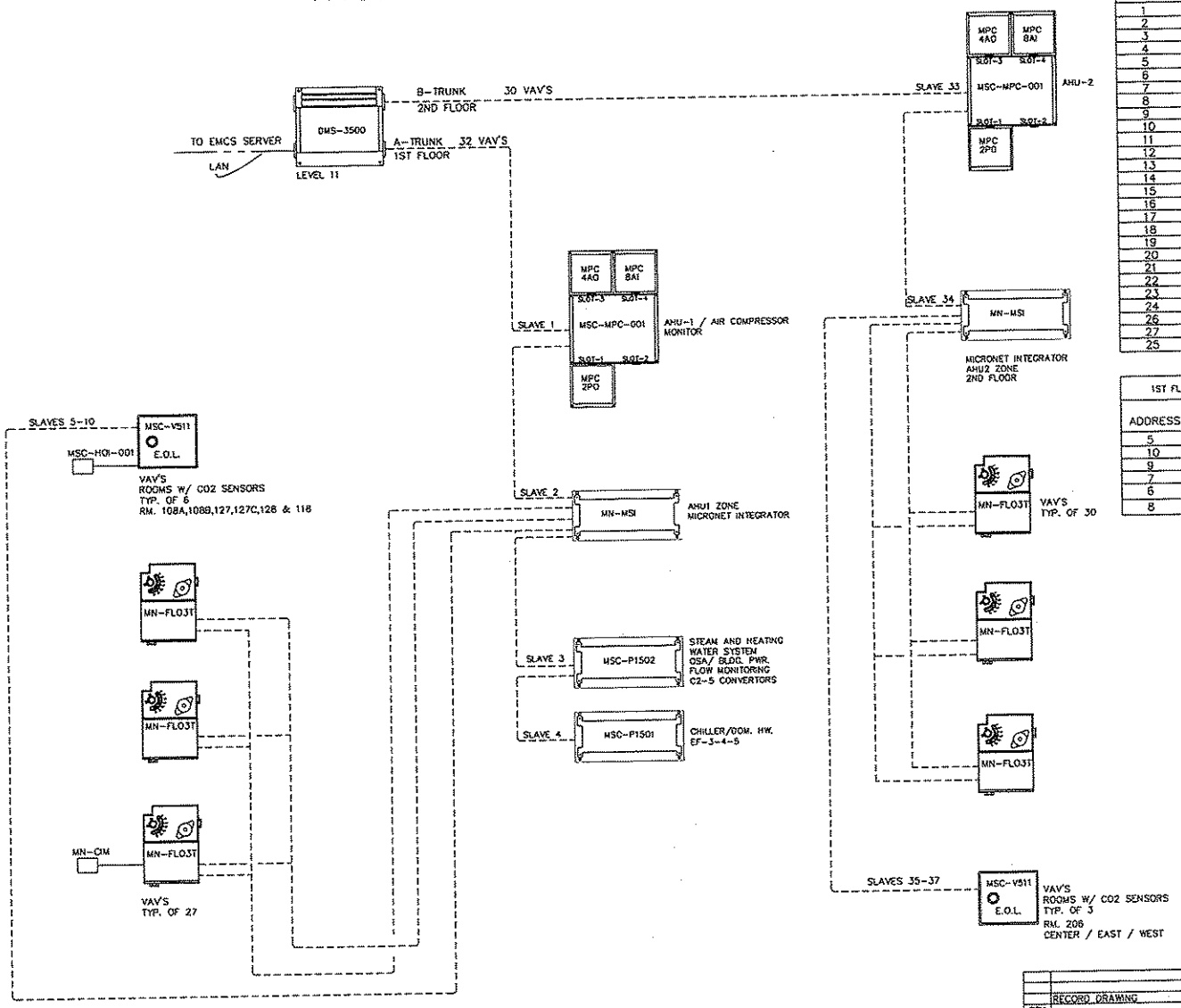

1ST FLOOR VAV SCHEDULE MICRONET CONTROLLERS			
ADDRESS #	ROOM #	FAN TYPE S-SERIES P-PARRALLEL	UNIT #
1	125	P	TU-31
2	123S	–	TU-35
3	123N	–	TU-34
4	123A	–	TU-63
5	120	–	TU-62
6	103A	–	TU-60
7	102	–	TU-59
8	115	–	TU-58
9	113A	P	TU-57
10	113	–	TU-56
11	112	P	TU-55
12	111	P	TU-54
13	107	P	TU-51
14	106A	–	TU-50
15	106	P	TU-49
16	105	P	TU-48
17	101	–	TU-47
18	131A	–	TU-46
19	130A	–	TU-44
20	104	–	TU-45
21	132	P	TU-36
22	129	–	TU-38
23	127E	P	TU-41
24	127B	P	TU-43
25	125B	P	TU-33
27	126	–	TU-32
28	126C	–	TU-39

2ND FLOOR VAV SCHEDULE MICRONET CONTROLLERS			
ADDRESS #	ROOM #	FAN TYPE S-SERIES P-PARRALLEL	UNIT #
1	223	P	TU-01
2	224E	P	TU-02
3	224B	P	TU-03
4	224D	P	TU-04
5	224	–	TU-05
6	224A	P	TU-06
7	225	P	TU-07
8	206A	P	TU-08
12	209	P	TU-12
13	209A	P	TU-13
14	209B	P	TU-14
15	203	–	TU-15
16	208	–	TU-16
17	224F	–	TU-17
18	205	–	TU-18
19	221	P	TU-19
20	220	–	TU-20
21	218	–	TU-21
22	217	–	TU-22
23	215	P	TU-23
24	204	–	TU-24
25	211	–	TU-25
26	212	P	TU-26
27	210E	–	TU-27
28	210C	P	TU-28
29	210	P	TU-29
30	210A	–	TU-30

1ST FLOOR VAV SCHEDULE MSC-V511 CONTROLLERS			
ADDRESS #	ROOM #	TYPE S-SERIES P-PARRALLEL	UNIT #
5	118	S	TU-61
10	108A	–	TU-53
9	108B	–	TU-52
7	127	–	TU-40
6	127C	S	TU-42
8	128	P	TU-37

2ND FLOOR VAV SCHEDULE MSC-V511 CONTROLLERS			
ADDRESS #	ROOM #	TYPE S-SERIES P-PARRALLEL	UNIT #
35	206	S	TU-09
36	206C	S	TU-10
37	206	S	TU-11

REV No.	DESCRIPTION	REV DATE	APPROVALS
	RECORD DRAWING	10.31.96	

-REVISIONS-

SIEBE ENVIRONMENTAL CONTROLS

SIEBE ENVIRONMENTAL CONTROLS
1915 E. MAIN
SPOKANE, WA. 99202

DESCRIPTION: TRUNK LAYOUT – BLDG.2005

JOB NAME: SQUAD OPS/AMU
LOCATION: F.A.F.B. SPOKANE, WA.
ARCHITECT: WJA PS
ENGINEER: WOOD / HARBINGER INC.
CONTRACTOR: RAMSETT MECHANICAL
ENGR'D BY: R.RHODES
CHECKED BY: D.DARLING
PROJECT NO. 965-9501.3-34
DRAWN BY: D.A.S.

DRAWING NO. 9501.3-1.DWG
DATE 2.19.96 SHEET 1 OF 6

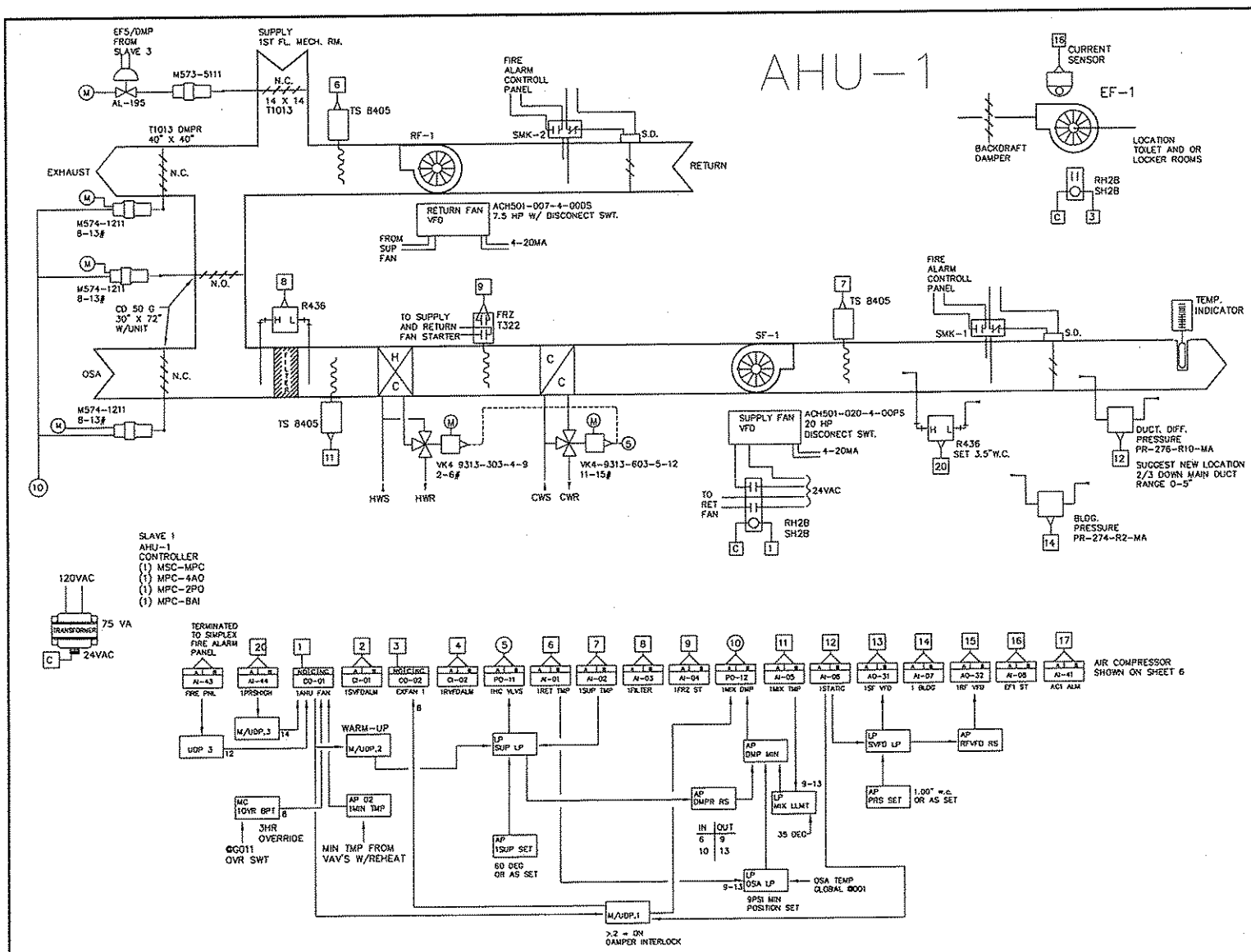

Sequence of operation AHU-1 / RF-1:

The Siebe automation control system will utilize optimal start, occupied and unoccupied modes of control.

Optimal start/warm-up mode: The Siebe automation system will calculate the outside air temp. and the space temperature to start the fan systems to bring the space temperatures up to occupied setpoint at the latest possible time.

During optimal start/warm-up the dampers will be positioned to full recirculation, variable frequency controlling to duct static pressure, the cooling valve in full bypass with the associated exhaust fans off and primary dampers of vav dampers open 100% supply air shall be set at 80 deg.

Occupied mode: The supply and return fans will operate continuously. Exhaust fan 1 shall be on. The dampers positioned to minimum outside air as set thru by balancing contractor. The heating valve, osa/return/relief dampers and cooling valve will modulate in sequence to maintain 60 degree supply air temperature. A coil for heating will modulate the heating valve open with the dampers positioned to minimum. A coil for cooling will modulate the dampers from minimum to 100% outside air, a further coil for cooling will modulate the cooling valve open. The dampers will be positioned to minimum
when the outside air temperature is greater than the return air temperature. Minimum supply air temperature will be limited to 60 degrees.

Ventilation mode: The Siebe controller will position dampers to maintain 5500 cfm minimum outside air during the ventilation mode.

Supply air static pressure control: A duct static pressure sensor located 2/3 down the longest supply duct run will signal the Siebe controller. The supply fan variable frequency drive will be utilized to maintain 1.25" w.c.

Return fan control: The Siebe controller will utilize the variable frequency drive to maintain differential cfm between the supply and return. Differential cfm offset will be based on the total of non-recirculated exhaust air cfm and pressurization cfm. CFM offset will be established during air balance.

A freeze protection thermostat located on the discharge side of the heating coil will stop the supply and return fans if 40 degree discharge air is sensed. A alarm will be generated to the Siebe automation system.

A duct smoke detector thru the fire alarm system will shutdown the air handler upon detection of smsoke and the smoke isolation dampers wil close.

A high duct static pressure switch will shutdown the air handler if duct discharge static pressure exceeds 3.5" w.c.

Exhaust fan 1: Exhaust fan will be on during occupied mode of AHU-1 and off during unoccupied mode of AHU-1.

BLDG.2005

REV No.	DESCRIPTION	REV DATE	APPROVALS
	RECORD DRAWING	10.31.96	

-REVISIONS-

SIEBE ENVIRONMENTAL CONTROLS

SIEBE ENVIROMENTAL CONTROLS
3915 E. MAIN
SPOKANE, WA. 99202

DESCRIPTION: AHU-1 - BLDG.2005

JOB NAME	SQUAD OPS/AMU
LOCATION	F.A.F.B. SPOKANE, WA.
ARCHITECT	WLA PS
ENGINEER	WOOD / HARBINGER INC.
CONTRACTOR	RAMSETT MECHANICAL
ENGR'D BY	R.RHODES
CHECKED BY	D.DARLING
PROJECT NO.	965-95013-34
DRAWN BY	D.A.S.

DRAWING NO. 95013-2.DWG

DATE 2.19.96 SHEET 2 OF 6

AHU-2

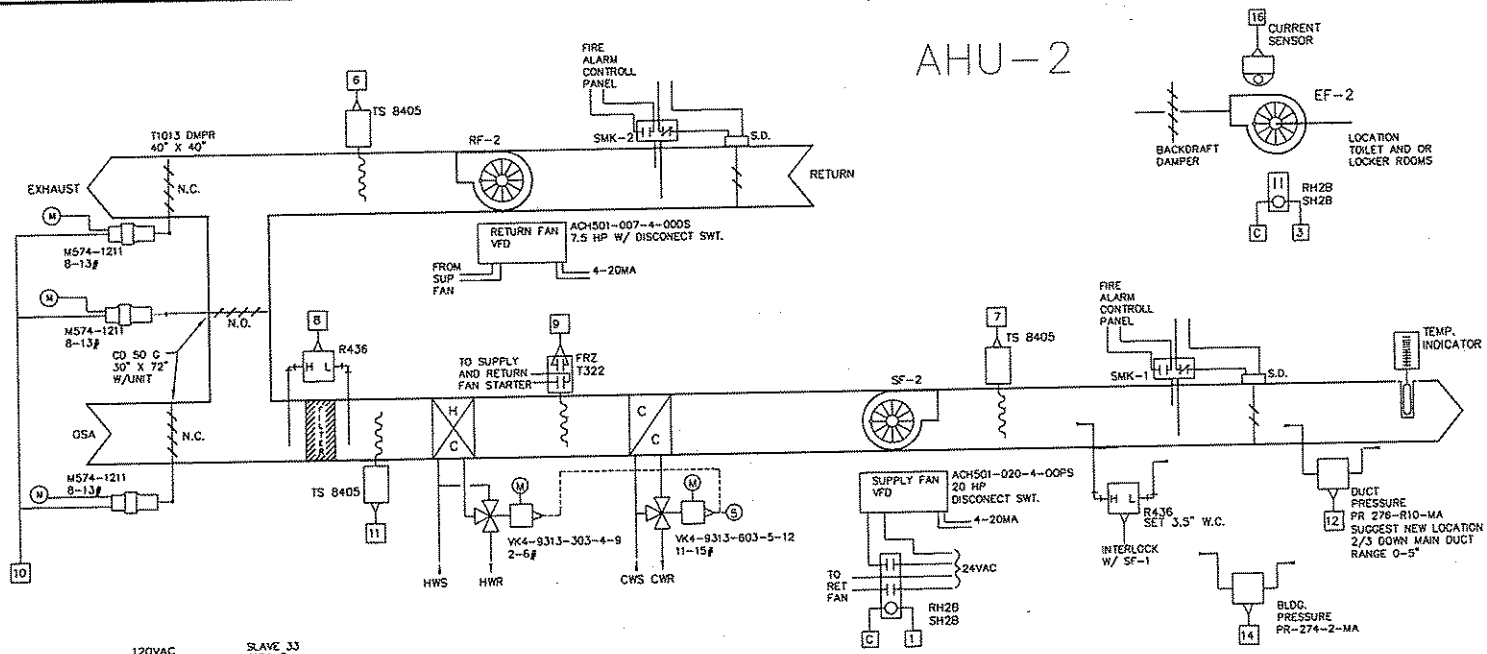

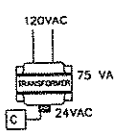

SLAVE 33
AHU-2
CONTROLLER
(1) MSC-MPC
(1) MPC-4AO
(2) MPC-2PO

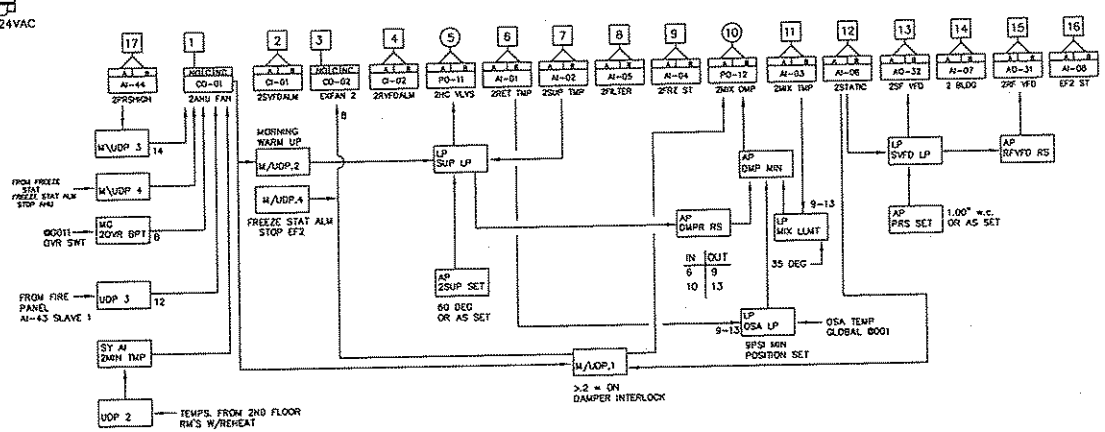

Sequence of operation AHU-2 / RF-2:

The Siebe automation control system will utilize optimal start, occupied and unoccupied modes of control.

Optimal start/warm-up mode: The Siebe automation system will calculate the outside air temp. and the space temperature to start the fan systems to bring the space temperatures up to occupied setpoint at the latest possible time.

During optimal start/warm-up the dampers will be positioned to full recirculation, variable frequency controlling to duct static pressure, the cooling valve in full bypass with the associated exhaust fans off and primary dampers of vav dampers open 100%
Supply air shall be set at 80 deg.

Occupied mode: The supply and return fans will operate continuously with the dampers positioned to minimum outside air as set thru by balancing contractor. The heating valve, osa/return/relief dampers and cooling valve will modulate in sequence to maintain 60 degree supply air temperature. A call for heating will modulate the heating valve open with the dampers positioned to minimum. A call for cooling will modulate the dampers from minimum to 100% outside air, o further call for cooling will modulate the cooling valve open. The dampers will be positioned to minimum when the outside air temperature is greater than the return air temperature. Supply air temperature will be limited to 60 degrees.

Ventilation mode: The Siebe controller will position dampers to maintain 5500 cfm minimum outside air during the ventilation mode.

Supply air static pressure control: A duct static pressure sensor located 2/3 down the longest supply duct run will signal the Siebe controller. The supply fan variable frequency drive will be utilized to maintain 1.00" w.c. or as set.

Return fan control: The Siebe controller will utilize the variable frequency drive to maintain differential cfm between the supply and return. Differential cfm offset will be based on the total of non-recirculated exhaust air cfm and pressurization cfm. CFM offset will be established during air balance.

A freeze protection thermostat located on the discharge side of the heating coil will stop the supply and return fans if 40 degree discharge air is sensed. A alarm will be generated to the Siebe automation system. 2/4/99 - change M/UDP4 - stops AHU2 and EF2 if freeze stat in alarm.

A duct smoke detector thru the fire alarm system will shutdown the air handler upon detection of smoke and the smoke isolation dampers will close.

A high duct static pressure switch will shutdown the air handler if duct discharge static pressure exceeds 3.5" w.c.

Exhaust fan 2: Exhaust fan will be on during occupied mode of AHU-2 and off during unocuupied mode of AHU-2.

BLDG. 2005

SIEBE ENVIRONMENTAL CONTROLS
SIEBE ENVIRONMENTAL CONTROLS
3915 E. MAIN
SPOKANE, WA. 99202

DESCRIPTION
AHU-2 - BLDG. 2005

JOB NAME	SQUAD OPS/AMU
LOCATION	F.A.F.B. SPOKANE, WA.
ARCHITECT	WJA PS
ENGINEER	WOOD / HARBINGER INC.
CONTRACTOR	RAMSETT MECHANICAL
ENGR'D BY	R.RHODES
CHECKED BY	D.DARLING
PROJECT NO.	965-95013-34
DRAWN BY	D.A.S.

DRAWING NO. 95013-3.DWG
DATE 2.19.96 SHEET 3 OF 6

REV No.	DESCRIPTION	REV DATE	APPROVALS
	RECORD DRAWING	10.31.96	

-REVISIONS-

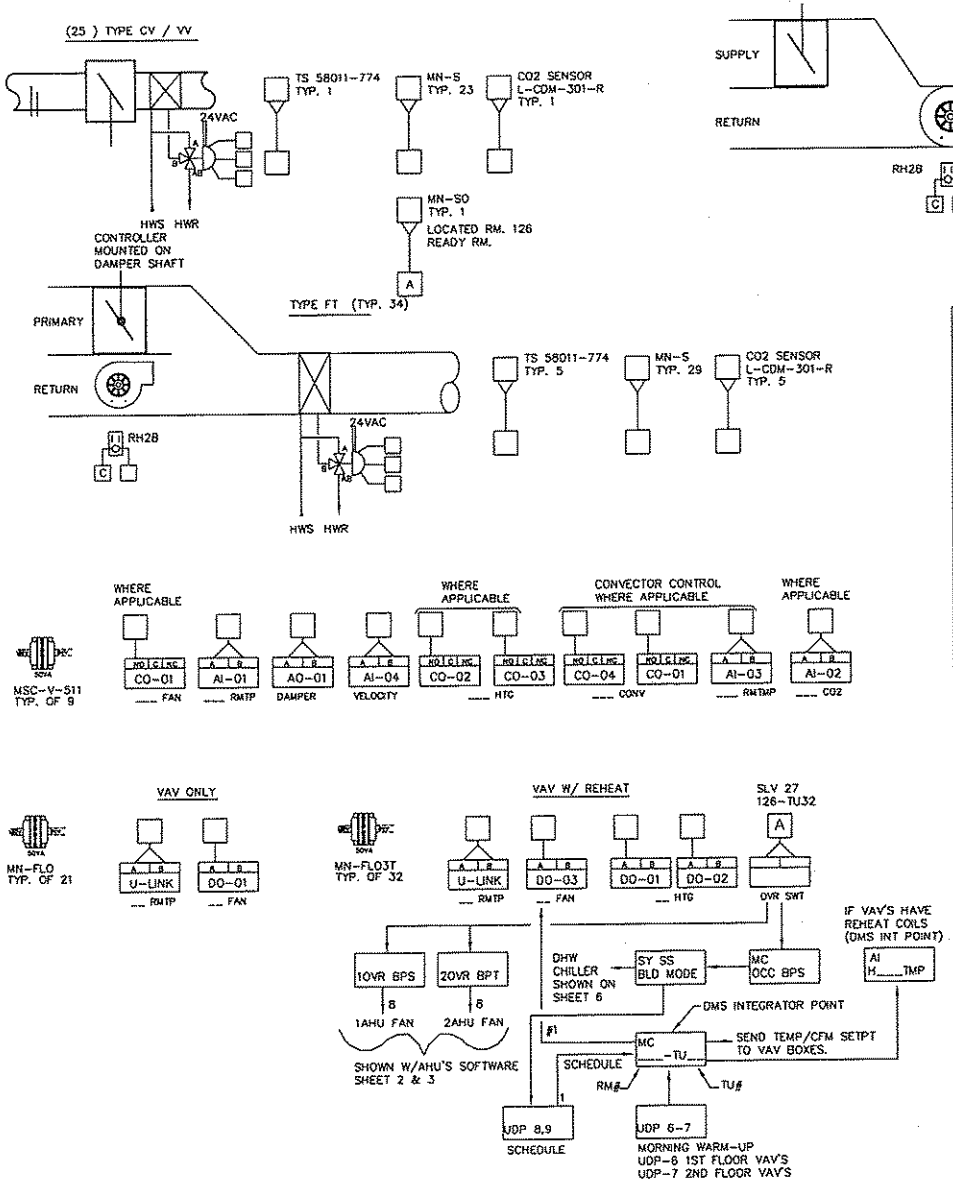

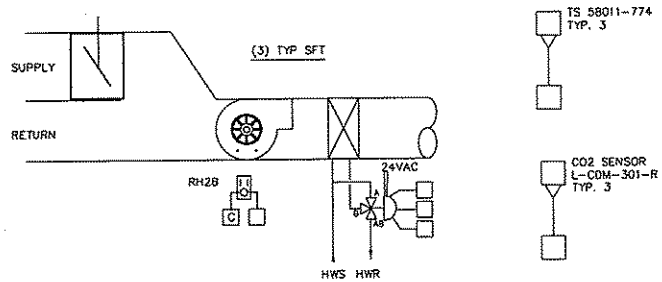

VAV VALVE AND CONTROLLER SCHEDULE

ROOM#	BOX	TYPE	VALVE	CONTROLLER	CO2 req'd	VALVE
113A	8"	FT	VF 9213-251-4-2	MN-FL03T	NO	
113	8"	VV	NO	MN-FLO	NO	
112	12"	FT	VF 9313-251-4-4	MN-FL03T	NO	3-WAY
115	6"	CV	VF 9213-251-4-2	MN-FL03T	NO	
103	10"	VV	NO	MN-FLO	NO	
118	10"	SFT	VF 9213-251-4-3	MSC-V511	YES	
123A	6"	VV	NO	MN-FLO	NO	
123	6"	VV	NO	MN-FLO	NO	
123	6"	VV	NO	MN-FLO	NO	
125	8"	FT	VF 9213-251-4-2	MN-FL03T	NO	
125B	6"	FT	VF 9213-251-4-2	MN-FL03T	NO	
126	8"	VV	NO	MN-FLO	NO	
129	6"	VV	NO	MN-FLO	NO	
126C	6"	VV	NO	MN-FLO	NO	
127	6"	VV	VF 9213-251-4-2	MSC-V511	YES	
127A	6"	FT	VF 9213-251-4-2	MN-FL03T	NO	
127C	6"	SFT	VF 9213-251-4-2	MN-FL03T	NO	
127E	8"	FT	VF 9213-251-4-2	MN-FL03T	NO	
128	10"	FT	VF 9213-251-4-3	MSC-V511	YES	
132	8"	FT	VF 9213-251-4-2	MN-FL03T	NO	
130A	6"	CV	VF 9213-251-4-2	MN-FL03T	NO	
131A	8"	CV	NO	MN-FLO	NO	
101	6"	VV	NO	MN-FLO	NO	
105	8"	FT	VF 9213-251-4-2	MN-FL03T	NO	
106	8"	FT	VF 9213-251-4-2	MN-FL03T	NO	
107	8"	FT	VF 9213-251-4-2	MSC-V511	YES	
108	6"	VV	VF 9213-251-4-2	MSC-V511	YES	
111	10"	FT	VF 9313-251-4-4	MN-FL03T	NO	3-WAY
106A	6"	VV	NO	MN-FLO	NO	
102	8"	VV	NO	MN-FLO	NO	
120	6"	VV	NO	MN-FLO	NO	
104	6"	VV	NO	MN-FLO	NO	
ROOM#	**BOX**	**TYPE**	**VALVE**	**CONTROLLER**	**CO2 req'd**	**VALVE**
210A	8"	FT	VF 9313-251-4-2	MN-FL03T	NO	3-WAY
210C	8"	FT	VF 9213-251-4-2	MN-FL03T	NO	
210E	10"	VV	NO	MN-FLO	NO	
210	10"	FT	VF 9213-251-4-3	MN-FL03T	NO	
212	8"	FT	VF 9213-251-4-2	MN-FL03T	NO	
215	6"	VV	VF 9213-251-4-2	MN-FL03T	NO	
216	10"	FT	VF 9213-251-4-3	MN-FL03T	NO	
204	6"	CV	VF 9213-251-4-2	MN-FL03T	NO	
221	10"	FT	VF 9213-251-4-2	MN-FL03T	NO	
220	6"	CV	VF 9213-251-4-2	MN-FL03T	NO	
218	6"	CV	VF 9213-251-4-2	MN-FL03T	NO	
211	10"	VV	NO	MN-FLO	NO	
203	6"	VV	NO	MN-FLO	NO	
208	6"	VV	NO	MN-FLO	NO	
224F	8"	VV	NO	MN-FLO	NO	
205	6"	VV	NO	MN-FLO	NO	
223	8"	FT	VF 9213-251-4-2	MN-FL03T	NO	
224E	8"	FT	VF 9213-251-4-2	MN-FL03T	NO	
224B	6"	FT	VF 9213-251-4-2	MN-FL03T	NO	
224D	8"	FT	VF 9213-251-4-2	MN-FL03T	NO	
224	6"	VV	NO	MN-FLO	NO	
224A	8"	FT	VF 9213-251-4-2	MN-FL03T	NO	
225	10"	VV	VF 9213-251-4-3	MN-FL03T	NO	
206A	6"	FT	VF 9213-251-4-2	MN-FL03T	NO	
206	12"	SFT	VF 9213-251-4-2	MSC-V511	YES	
206	12"	SFT	VF 9213-251-4-2	MSC-V511	YES	
206	12"	SFT	VF 9213-251-4-2	MSC-V511	YES	
209	10"	FT	VF 9213-251-4-3	MSC-V511	YES	
209A	8"	FT	VF 9213-251-4-2	MN-FL03T	NO	
209B	6"	FT	VF 9313-251-4-2	MN-FL03T	NO	3-WAY

Sequence of operation space temperature control:

VAV boxes: During the occupied mode the damper will modulate to maximum cfm on a call for cooling. On a drop in space temperature the damper will modulate to minimum cfm, a further drop in space temperature the heating control valve will open. Heating setpoint 68 degree, cooling setpoint 74 degrees.

Fan powered (series) boxes: During the warm-up / optimal start and occupied modes the fan will run continuously. The damper will modulate from minimum cfm to maximum cfm on a call for cooling to maintain cooling setpoint. On a drop in space temperature the damper will modulate to minimum cfm, a further drop in space temperature the heating control valve will open. Heating setpoint 68 degrees, cooling setpoint 75 degrees. During the unoccupied mode the fan will start and the heating control valve will open when space temperature falls to 55 degrees. Unit will continue to operate in full heating until temperature rises to 60 degrees.

Fan powered (parallel) boxes: During the occupied mode the damper will modulate from minimum cfm to maximum cfm on a call for cooling to maintain cooling setpoint. On a drop in space temperature the damper will modulate to minimum cfm, a further drop in space temperature the fan will start and the heating control valve will open. Heating setpoint 68 degrees, cooling setpoint 75 degrees. During the unoccupied mode the fan will start and the heating control valve will open when space temperature falls to 55 degrees. Unit will continue to operate in full heating until temperature rises to 60 degrees.

Terminal unit ventilation control (see control drawing for schedule): During the occupied mode the Siebe automation will monitor the co2 levels as indicated. Upon a rise in co2 level the damper will modulate open to maximum cfm per the following schedule:

Space co2 level (ppm)	Terminal unit damper
Below 700	Under space temp. control
1000	Maximum cfm

The damper will modulate linearally between the indicated co2 levels. The terminal unit will control to maintain 68 degree heating setpoint during co2 override.

BLDG. 2005 – VAV BOXES

RECORD DRAWING: 10.31.96

SIEBE ENVIRONMENTAL CONTROLS
SIEBE ENVIROMENTAL CONTROLS
3915 E. MAIN
SPOKANE, WA. 99202

DESCRIPTION: VAV BOXES – BLDG. 2005

JOB NAME	SQUAD OPS/AMU
LOCATION	F.A.F.B. SPOKANE, WA.
ARCHITECT	WJA PS
ENGINEER	WOOD / HARBINGER INC.
CONTRACTOR	RAMSETT MECHANICAL
ENGR'D BY	R.RHODES
CHECKED BY	D.DARLING
PROJECT NO.	965-95013-34
DRAWN BY	D.A.S.
DRAWING NO.	95013-4.DWG
DATE	2.19.96
SHEET	4 OF 6

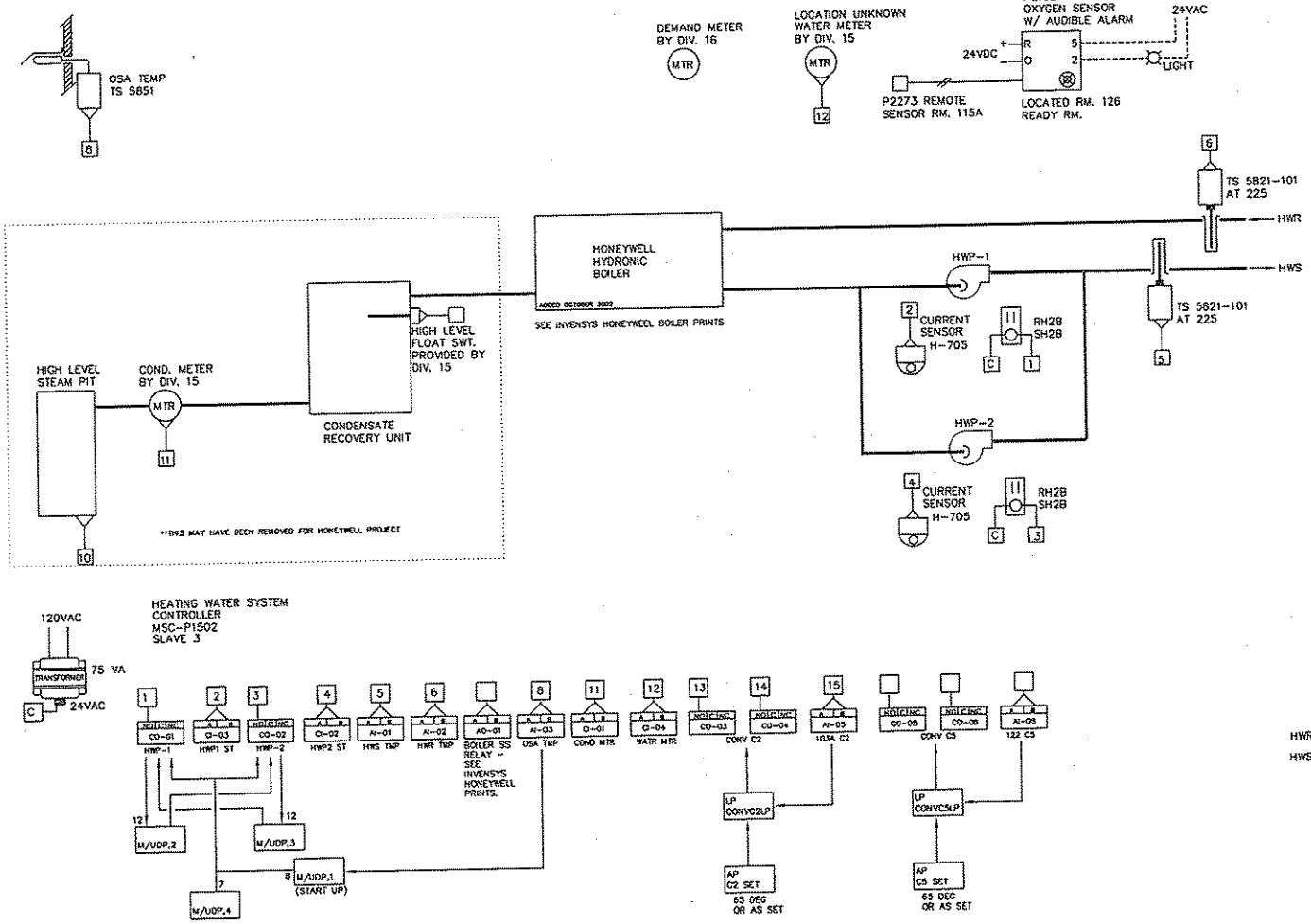

Sequence of operation Heating Water System:

Steam to HW convertor has been removed. A Honeywell hydronic boiler now provides the heating medium. See Invensys Honeywell ESPC prints for more info.

Hot water pumps shall have a minimum on time of 30 minutes. When hot water pumps status is off the steam valve shall be closed.

The Siebe automation system will energize the lead heating water pump below 65 degrees osa temperature. Upon failure of the lead heating pump the lag heating water pump will be energized after a delay (60 seconds) as programmed thru the Siebe system.

The lead heating water pump will be alternated weekly based on run-time.

Sequence of operation Convectors: Siebe will control the heating valve to maintain 65 degree occupied space temperature and 55 degree unoccupied space temperature.

Siebe will monitor the electrical demand meter.
Siebe will monitor the water meter.
Siebe will monitor the condensate meter

Siebe will monitor the oxygen level in Room 115A (oxygen bottle maintenance room). Upon high oxygen level, an audible and visual alarm (with silence switch) will activate in the ready room 126. An auxiliary visual alarm will be activated near the entrance to the oxygen bottle maintenance room.

CONVECTOR	LOCATION	TERMINATION CONTROLLER	SLAVE #
C-1	RM. 102A	MSC-V-511	7
C-2	RM. 103A	MSC-P1502	3
C-3	RM. 126A	MSC-V-511	10
C-4	RM. 101A	MSC-V-511	9
C-5	RM. 122	MSC-P1502	3

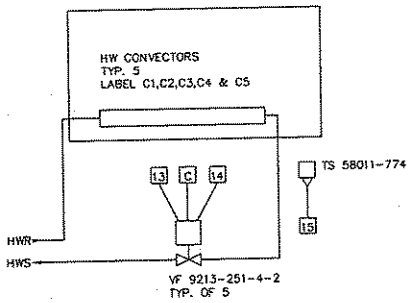

5/7/03 - REMOVED HW CONVERTOR/ADDED BOILER - MZ

SIEBE ENVIRONMENTAL CONTROLS

SIEBE ENVIROMENTAL CONTROLS
3815 E. MAIN
SPOKANE, WA. 99202

DESCRIPTION
STEAM AND HEATING WATER SYSTEM - BLDG. 2005

JOB NAME SQUAD OPS/AMU
LOCATION F.A.F.B. SPOKANE, WA.
ARCHITECT WJA PS
ENGINEER WOOD / HARBINGER INC.
CONTRACTOR RAMSETT MECHANICAL
ENGR'D BY R.RHODES
CHECKED BY D.DARLING
PROJECT NO. 965-95013-34
DRAWN BY D.A.S.

DRAWING NO. 95013-5.DWG
DATE 2.19.96 SHEET 5 OF 6

REV No.	DESCRIPTION	REV DATE	APPROVALS
	RECORD DRAWING	10.31.96	

-REVISIONS-

BLDG 2005

CHILLED WATER SYSTEM

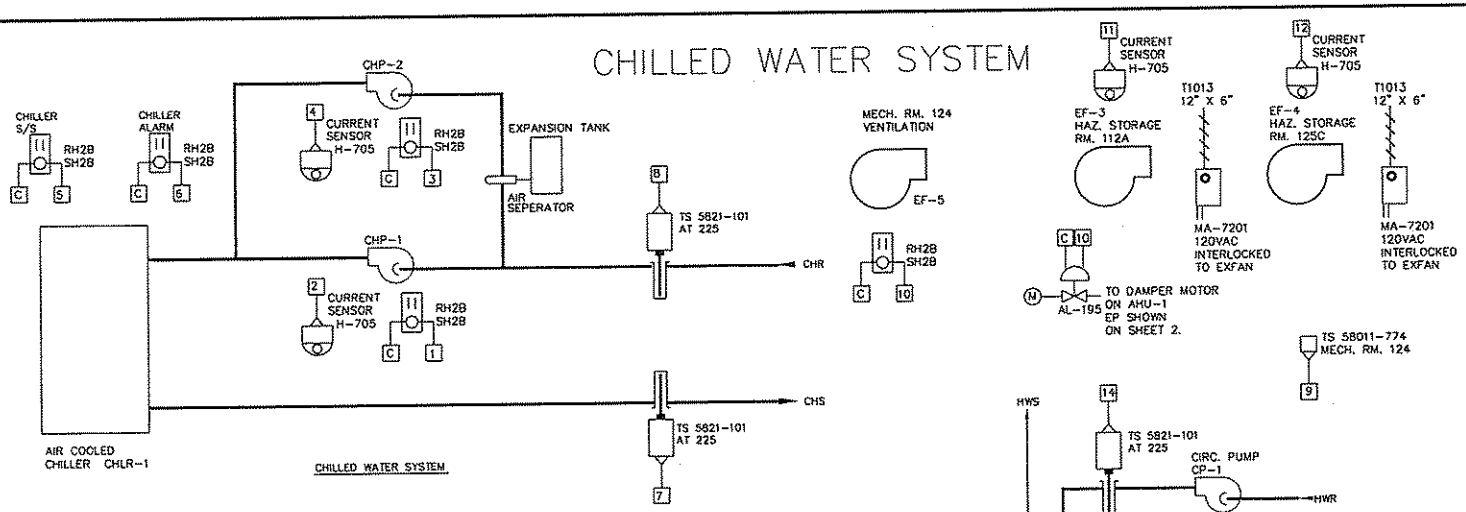

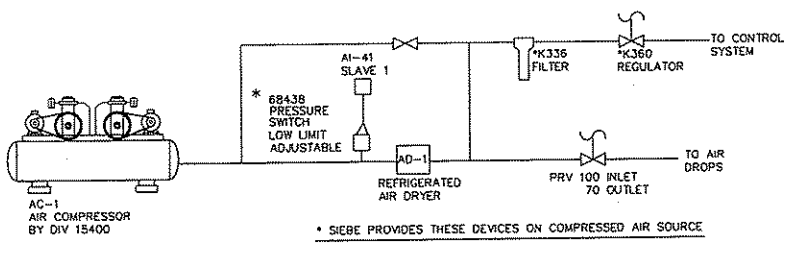

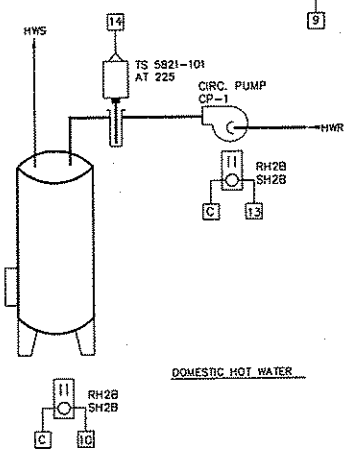

Sequence operation Chilled Water System:

The Siebe automation system will start the chilled water system when the outside air temperture is above 62 degrees and there is a demand for cooling from either of the air handling units, and bldg. is in occupied mode.
The automation system will stop the chilled water system when the outside air temperature is below 60 degrees or there is no cooling demand from either of the air handling units.Chilled water pump shall have a minimum on time of 30 minutes.

The Siebe controller will start the lead chilled water pump and upon proof of start up the chiller will be enabled. On proof of flow the chiller will operate upon its self contained controls to maintain chilled water setpoint. Upon lead pump failure the chiller will be disabled, the lag pump will be started and upon proof of start the chiller will be enabled.

The Siebe controller will disable the chiller and the chilled water pump will continue to operate for three (3) minutes (or as set).

The lead chilled water pump will be alternated weekly based on run-time.
Sequence of operation Mechanical room ventilation: A rise in space temperature to 85 degrees will start EF-5 and open the return air damper at AHU-1. Fan will continue to operate with damper open until temperature falls to 80 degrees.

Siebe will monitor the status of EF-3 and EF-4.

Siebe will monitor low air pressure for air compressor AC-1.

Siebe will provide scheduled start / stop for the Domestic hot water heater and circ. pump.
Siebe will monitor the domestic hot water re-circulation temperature.

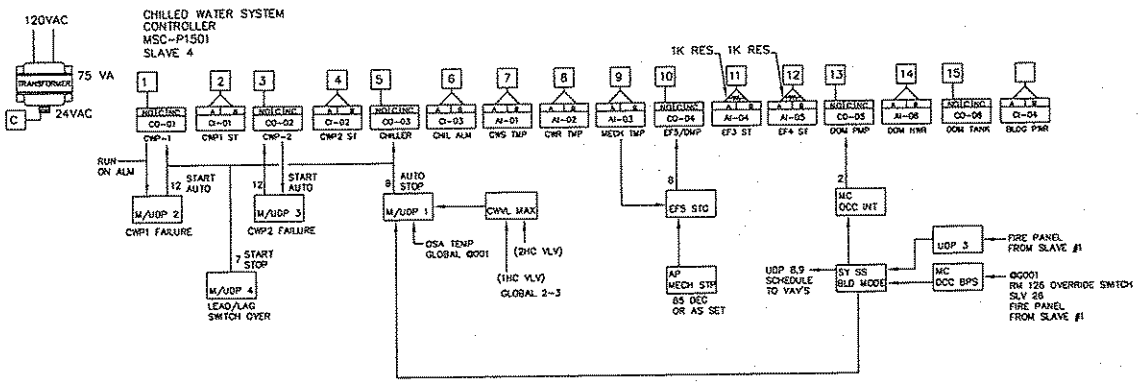

BLDG. 2005

SIEBE ENVIRONMENTAL CONTROLS
SIEBE ENVIRONMENTAL CONTROLS
3915 E. MAIN
SPOKANE, WA. 99202

DESCRIPTION
CHILLED WATER SYSTEM - BLDG. 2005

JOB NAME	SQUAD OPS/AMU
LOCATION	F.A.F.B. SPOKANE, WA.
ARCHITECT	WJA PS
ENGINEER	WOOD/HARBINGER INC.
CONTRACTOR	RAMSETT MECHANICAL
ENGR'D BY	R.RHODES
CHECKED BY	D.DARLING
PROJECT NO.	965-95013-34
DRAWN BY	D.A.S.

REV No.	DESCRIPTION	REV DATE	APPROVALS
	RECORD DRAWING	10/31/96	

-REVISIONS-

DRAWING NO. 95013-6.DWG
DATE 2.19.96 SHEET 6 OF 6

BLDG. 2005

AIR HANDLING UNIT - FAN AND FILTER SCHEDULE

EQUIP NO	ARRGT/ DISCHARGE	MINIMUM OSA CFM (3)	FAN SECTION: AIRFLOW CFM (4)	FAN SECTION: EXT SP IN WG (1)	FAN SECTION: WHEEL DIA IN	FAN SECTION: MAX BHP	FAN SECTION: MOTOR HP	FILTER: TYPE	FILTER: EFF. %	FILTER: MAX FV FPM	FILTER: PD IN WG CLEAN	FILTER: PD IN WG FINAL (2)	REMARKS
AHU-1	AF/PLUG/SNSI	3,500	16,000	4.0	33	15.07	20	PLEATED THROWAWAY	30	240	0.2	0.60	VARIABLE SPEED DRIVE - PACE MODEL PF-33
AHU-2	AF/PLUG/SNSI	6,300	17,000	4.0	33	16.1	20	PLEATED THROWAWAY	30	255	0.2	0.60	VARIABLE SPEED DRIVE - PACE MODEL PF-33

NOTES:
(1) EXTERNAL TO FAN SECTION CABINET, NOT INCLUDING CABINET LOSSES.
(2) DESIGN CHANGE-OUT POINT.
(3) MINIMUM OSA CFM BASED ON MAXIMUM UNIT AIR FLOW
(4) AIRFLOWS, SHP AND PD BASED UPON FAIRCHILD AFB, WA. (ELEVATION 2462 FT)

AIR HANDLING UNIT - COIL SCHEDULE

EQUIP NO	AIRFLOW CFM (1)	CHILLED WATER COIL (2): ENT °F DB	ENT °F WB	LAT °F DB	LAT °F WB	MAX FV FPM	MAX AIR PD IN WG	H2O FLOW GPM	EWT °F	LWT °F	MAX H2O PD FT HD	HOT WATER COIL (3): EAT °F	LAT °F	MAX FV FPM	MAX AIR PD IN WG	H2O FLOW GPM	EWT °F	LWT °F	MAX H2O PD FT HD	REMARKS
AHU-1	16,000	84	66.2	50.0	57.9	546	0.8	110	45	53	12	40	51.3	515	0.16	36	180	154	4.4	
AHU-2	17,000	84	66.2	50.5	57.5	501	0.78	117	45	54	13	43	65.7	450	0.15	34	180	152	4.4	

NOTES:
(1) AIRFLOW AND PD BASED UPON FAIRCHILD AFB, WA. (ELEVATION 2462 FT)(2) 50% PROPYLENE GLYCOL BY WEIGHT. (3) 40% PROPYLENE GLYCOL BY WEIGHT.

FAN SCHEDULE

EQUIP NO	SERVICE	TYPE	WHEEL DIA. IN	ARRGT/ DISCHARGE	AIRFLOW CFM (2)	EXT SP IN WG (2)	RPM	MAX BHP (2)	MOTOR HP	DRIVE	REMARKS
EF-1	FIRST FLOOR EXHAUST	IN-LINE	13	HORIZ/HORIZ	1,250	0.75	1,442	0.32	1/2	BELT	GREENHECK BSQ-130-5
EF-2	SECOND FLOOR EXHAUST	IN-LINE	13	HORIZ/HORIZ	1,150	0.625	1,320	0.24	1/3	BELT	GREENHECK BSQ-130-3
EF-3	HAZ STOR 112A	UTILITY FAN	8	HORIZ/HORIZ	200	0.25	1,211	0.02	1/4	BELT	EXPLOSION PROOF GREENHECK S-1PA
EF-4	HAZ STOR 125C	UTILITY FAN	8	HORIZ/HORIZ	200	0.25	1,211	0.02	1/4	BELT	EXPLOSION PROOF GREENHECK S-1PA
EF-5	MECHANICAL 124	PROP	14	HORIZ/HORIZ	993	0.25	1,225	0.12	1/3	DIRECT	GREENHECK SE1-14-435-A3
RF-1	AHU-1	VANEAXIAL	36	HORIZ/HORIZ	14,000	1.5 (1)	1,170	4.17	7-1/2	DIRECT	VARIABLE SPEED DRIVE GREENHECK VAO-36F17-14-07
RF-2	AHU-2	VANEAXIAL	36	HORIZ/HORIZ	16,250	1.5 (1)	1,173	4.89	7-1/2	DIRECT	VARIABLE SPEED DRIVE GREENHECK VAO-36F17-17-07

NOTES:
(1) TOTAL PRESSURE
(2) AIRFLOW EXT SP/TP AND BHP BASED ON FAIRCHILD AFB, WA. (ELEVATION 2462 FT)

AIR TERMINAL UNIT SCHEDULE

EQUIP NO	TYPE (1)	AIRFLOW RANGE CFM (2)	INLET SIZE (6): AT UNIT, IN	INLET SIZE (6): RUNOUT DUCT, IN	OUTLET SIZE IN (6)	MAX SP DROP IN WG (5)	HEATING COIL: EAT	HEATING COIL: EWT	HEATING COIL: H2O FLOW GPM	HEATING COIL: MAX H2O PD FT	FAN: MOTOR HP	FAN: EXT SP IN WG (7)	FAN: MAX CFM	DISC NC RATING (4)	REMARKS
6	V V OR CV	0 TO 400	6"	8"	10x12	0.10	60	180	1.0	2.0	-	-	-	30	TEMPMASTER V2 & HVH2 SIZE B
8	V V OR CV	401 TO 800	8"	10"	12x12	0.10	60	180	2.0	2.0	-	-	-	30	TEMPMASTER V2 & HVH2 SIZE C
10	V V OR CV	801 TO 1,200	10"	12"	16x14	0.10	60	180	3.0	2.0	-	-	-	30	TEMPMASTER V2 & HVH2 SIZE E
12	V V OR CV	1,201 TO 1,800	12"	14"	20x14	0.10	60	180	4.0	3.0	-	-	-	25	(NOT USED)
6	FT	0 TO 400	6"	8"	10x10	0.20	60	180	1.0	2.0	1/10	0.30	(3)	20	TEMPMASTER HVFBX2 SIZE B
8	FT	401 TO 800	8"	10"	12x12	0.20	60	180	2.0	2.0	1/4	0.30	(3)	26	TEMPMASTER HVFBX2 SIZE D
10	FT	801 TO 1,200	10"	12"	16x14	0.15	60	180	3.0	2.0	1/4	0.30	(3)	29	TEMPMASTER HVFBX2 SIZE E
12	FT	1,201 TO 1,800	12"	14"	20x14	0.12	60	180	4.0	3.0	1/3	0.30	(3)	34	TEMPMASTER HVFBX2 SIZE F
6	SFT	0 TO 400	6"	8"	10x10	0.20	60	180	1.0	2.0	1/10	0.30	(3)	28	[illegible] TEMPMASTER HVFBX2 SIZE B
8	SFT	401 TO 800	8"	10"	12x12	0.20	60	180	2.0	2.0	1/4	0.30	(3)	32	(NOT USED)
10	SFT	801 TO 1,200	10"	12"	16x14	0.15	60	180	3.0	2.0	1/3	0.30	(3)	36	TEMPMASTER HVFSX2 SIZE E

NOTES:
1. FT = FAN POWERED UNIT (PARALLEL); SFT = FAN POWERED UNIT (SERIES); V V = VARIABLE VOLUME UNIT; CV = CONSTANT VOLUME UNIT.
2. INDIVIDUAL TERMINAL UNIT MAX (COOLING CYCLE) AND MIN. (HEATING CYCLE) PRIMARY AIR FLOWS ARE INDICATED AT EACH UNIT ON FLOOR PLANS.
3. SERIES FAN TERMINAL: FAN CFM WILL BE EQUAL TO THE MAXIMUM PRIMARY AIR FLOW AS INDICATED ON THE FLOOR PLANS. PARALLEL FAN TERMINAL: DURING THE HEATING CYCLE, FAN CFM SHALL BE A NOMINALLY 50% OF THE MAXIMUM PRIMARY AIR FLOW AS INDICATED AS INDICATED ON THE FLOOR PLANS.
4. DISCHARGE NC BASED ON MAX AIR FLOW 0.3" STATIC PRESSURE DROP, 5FT LINED DUCT, 5FT OF FLEXIBLE DUCT AND LINEAR DIFFUSER.
5. STATIC PRESSURE INCLUDES TERMINAL UNIT ONLY.
6. SUPPLY AIR DUCTWORK BASED UPON THESE NOMINAL INLET / OUTLET SIZES.
7. STATIC PRESSURE EXCLUDES TERMINAL UNIT.
8. FOR TERMINAL UNIT COIL PIPING CONNECTIONS, SEE DETAIL 1 / M0.2/M2.5

SOUND ATTENUATOR SCHEDULE

EQUIP. NO.	SERVICE	TYPE	LENGTH IN.	MAX FV FPM	DUCT SIZE, IN	MAX PD IN WG	MINIMUM REQUIRED ACOUSTIC RATING dB RE 10⁻¹² W, OCTAVE BAND CENTER FREQUENCY HZ: 63	125	250	500	1000	2000	4000	8000	REMARKS
SA-1	AHU-1	RECTANGULAR	36	1150	30x72	0.25	5	7	16	19	17	12	0	10	COMMERCIAL ACOUSTICS MODEL SP-LFL
SA-2	AHU-2	RECTANGULAR	36	1150	30x72	0.25	5	7	16	19	17	12	0	10	COMMERCIAL ACOUSTICS MODEL SP-LFL
SA-3	RF-1, RF-2	RECTANGULAR	36	2000	36"	0.1	2	9	16	18	19	14	0	10	COMMERCIAL ACOUSTICS MODEL CIC-361

AIR COOLED CHILLER SCHEDULE

EQUIP NO	TOTAL CAPACITY TONS	EVAPORATOR: H2O FLOW GPM (1)	EVAPORATOR: EWT °F	EVAPORATOR: LWT °F	EVAPORATOR: PD FT H2O (1)	AMBIENT DB TEMP. °F	FANS: NO	FANS: TYPE	FANS: MOTOR (3) HP, EA	MAX INPUT KW	EER	MINIMUM CAPACITY STEPS	REMARKS
CHLR-1	62	227	55	45	15	90	10	PROPELLER	1	100	10.4	5	

NOTES:
(1) PROPYLENE GLYCOL 50% BY VOLUME
(2) CAPACITY BASED ON FAIRCHILD AFB, WA. (ELEVATION 2462 FT)

EQUIPMENT SOUND POWER LEVEL AND ISOLATOR SCHEDULE

EQUIP. NO.	MAX SOUND POWER LEVEL dB RE 10⁻¹² W, OCTAVE BAND CENTER FREQUENCY HZ: 63	125	250	500	1000	2000	4000	8000	VIBRATION ISOLATOR: TYPE	MIN STATIC DEFLECTION, IN.
AHU-1 (OUTLET)	77	82	78	75	73	67	64	60	(1)	0.75
AHU-2 (OUTLET)	77	82	78	76	73	69	65	61	(1)	2.5
RF-1	85	82	92	92	83	84	79	78	(2)	2.5
RF-2	87	90	94	94	91	86	81	80	(2)	2.5
EF-1	84	76	72	71	65	63	58	57	(2)	0.75
EF-2	83	74	66	63	57	57	50	43	(2)	0.75
AC-1	-	-	-	-	-	-	-	-	(3)	0.75
HWP-1,2	-	-	-	-	-	-	-	-	(3)	0.75
CHP-1,2	-	-	-	-	-	-	-	-	(3)	0.75
FT/SFT	-	-	-	-	-	-	-	-	(4)	0.25
CHLR-1	104	55	97	95	94	93	89	87	-	-

NOTES:
(1) INTERNALLY ISOLATED WITH SEISMICALLY RESTRAINED SPRING ISOLATORS. (3) INERTIA BASE WITH SPRING ISOLATORS AND SEISMIC SNUBBERS.
(2) SPRING HANGERS (4) NEOPRENE HANGERS

STEAM CONVERTOR SCHEDULE

EQUIP NO	TYPE	TUBE SIDE (HOT WATER): FLOW GPM	EWT °F	LWT °F	MAX PD FT HD	SHELL SIDE (STEAM): INPUT LB/HR	PRESSURE PSIG	REMARKS
HX-1	U-TUBE	125	160	180	2	1300	2	

(1) HOT WATER: 40% PROPYLENE GLYCOL BY VOLUME.

AIR COMPRESSOR AND AIR DRYER SCHEDULE

EQUIP. NO.	SERVICE	TYPE	NOMINAL CAPACITY SCFM	AIR DELIVERY PRESS. PSIG	CPRSR MOTOR HP	TANK GAL	REMARKS
AC-1	OXYGEN BOTTLE MAINT.	RECIPROCATING	11	100	3	80	DUPLEX TANK MOUNTED
AD-1	AC-1	REFRIGERATED	11		1/5	-	CAPACITY AT 35-33F DEW POINT AND 100F ENTERING AIR

PUMP SCHEDULE

EQUIP NO	SERVICE	TYPE	FLOW GPM	TOTAL DYNAMIC HD FT H2O	RPM	MIN EFF %	MOTOR HP	REMARKS
HWP-1,2	HEATING WATER SYS	END SUCTION	164 (1)	65.0	1,750	70	5.0	
CHP-1,2	CHILLED WATER SYS	END SUCTION	227 (2)	65.0	1,750	75	7.5	
CR-1	CONDENSATE UNIT	CLOSE COUPLED	9	115.0	3,450	--	1-1/2	DUPLEX WITH 15 GALLON RECEIVER

NOTES:
(1) HEATING WATER SYSTEM - PROPYLENE GLYCOL 40% BY VOLUME
(2) CHILLED WATER SYSTEM - PROPYLENE GLYCOL 50% BY VOLUME

CONVECTOR SCHEDULE

EQUIP. NO.	SERVICE	CAPACITY MBH	AVG H2O TEMP °F	H2O FLOW GPM	SIZE: LENGTH FT-IN	SIZE: WIDTH IN	SIZE: HEIGHT IN	REMARKS
C-1	VESTIBULE 102A	8.3	170	1.0	48	6	32	
C-2	VESTIBULE 103A	8.3	170	1.0	48	6	32	
C-3	VESTIBULE 126A	8.3	170	1.0	48	6	32	
C-4	VESTIBULE 101A	8.5	170	1.0	48	6	32	
C-5	OUI STOR 122	8.3	170	1.0	48	6	32	

NOTE: FOR CONVECTOR PIPING CONNECTIONS, SEE DETAIL

BLDG. 2005

EXPANSION TANK SCHEDULE

EQUIP NO	SERVICE	TYPE	CAP GAL	ACCEPTANCE GALLONS	CHARGE PSIG	MAX SIZE, IN.: DIA	MAX SIZE, IN.: LENGTH/HEIGHT	REMARKS
ET-1	HEATING WATER SYSTEM	DIAPHRAGM	3	11	12	16	43	HORIZONTAL
ET-2	CHILLED WATER SYSTEM	DIAPHRAGM	7	2.5	20	12	19	HORIZONTAL

NOTE:
1. REFER TO PLUMBING DRAWING P0.1 FOR ADDITIONAL SCHEDULES.

Parrott Mechanical, Inc.
6600 N. GOVERNMENT WAY
COEUR D'ALENE, ID 83814
(208) 772-8571

ARCHITECT: HJA, P.S. ARCHITECTS
MECHANICAL ENGINEER: WOOD/HARBINGER, INC. CONSULTING ENGINEERS
GENERAL CONTRACTOR: OSWOOD CONSTRUCTION, INC.
MECH. PIPING CONTRACTOR: RAMSETT MECHANICAL CO.
HVAC CONTRACTOR: PARROTT MECHANICAL, INC.

PROJECT TITLE: MECHANICAL EQUIPMENT SCHEDULES
KC-135 SQUADRON OPERATIONS/ AIRCRAFT MAINTENANCE UNIT
FAIRCHILD A.F.B. WASHINGTON

SHEET TITLE
HVAC AS-BUILT DRAWINGS
MECHANICAL EQUIPMENT SCHEDULES

PROJECT NO: 96010-C
DESIGNED BY: WOOD/HARBINGER
DRAWN BY: RAR
DATE: 08/01/96
CHECKED BY: MP

REVISIONS:
BY: RAR NO: ONE DATE: 10/25/96

SHEET NO.
M0.2
2 OF 7

BLDG. 2005

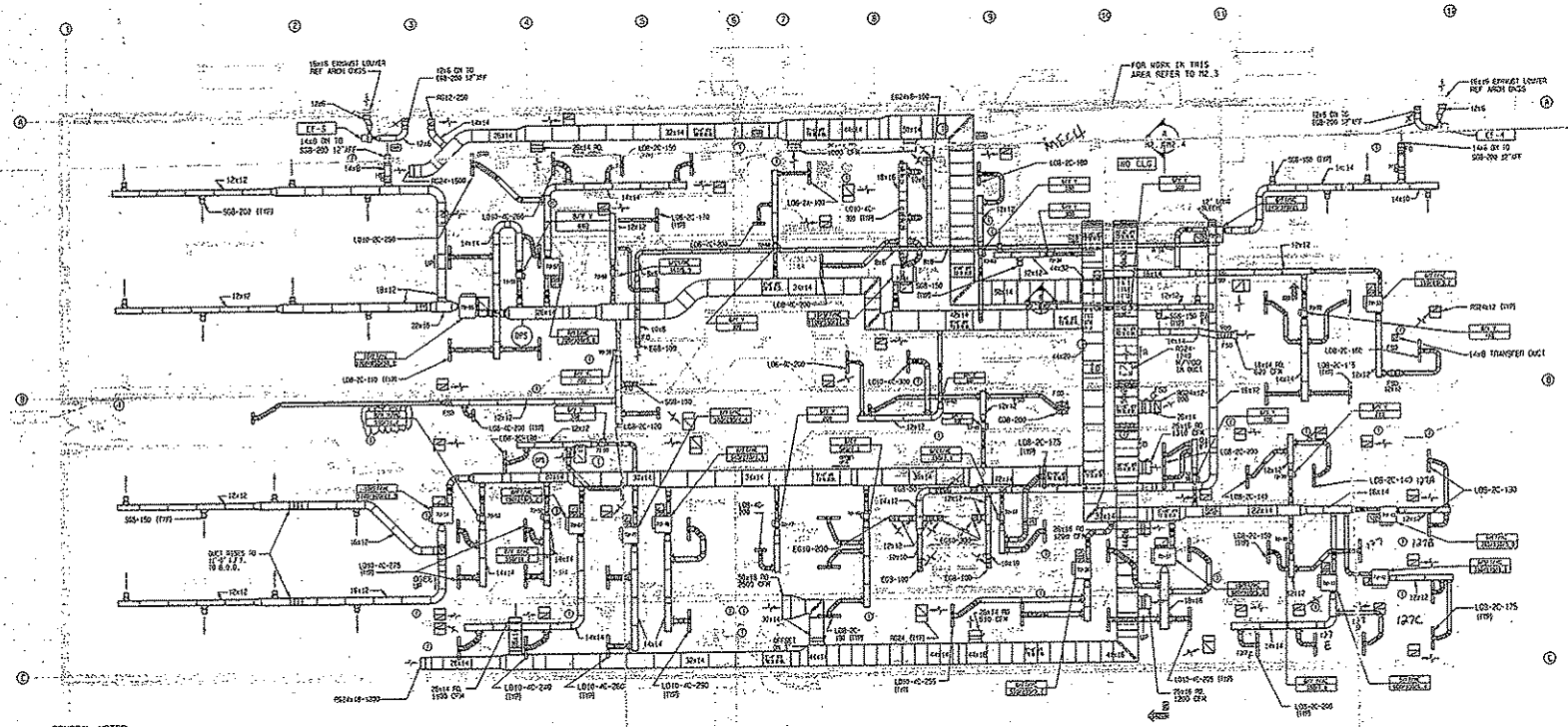

HVAC PLAN - FIRST FLOOR
SCALE: 1/8"=1'-0"

BLDG. 2005

GENERAL NOTES:

1. ALL DUCT SIZES SHOWN ARE OUTSIDE DIMENSIONS AND EXPANDED FOR DUCT LINER WHERE APPLICABLE.
2. MECHANICAL PIPING & EQUIPMENT SHOWN AS A REFERENCE ONLY ON THIS DRAWING. ACTUAL PIPING LOCATION TO BE BY MECHANICAL PIPING CONTRACTOR.
3. ACCESS DOORS WHETHER SHOWN OR NOT TO BE PROVIDED FOR ALL FIRE DAMPERS, FIRE-SMOKE DAMPERS, BACK-DRAFT DAMPERS AND ALL OTHER EQUIPMENT AS SPECIFIED.
4. MECHANICAL PIPING SHOWN AS REFERENCE ONLY. ACTUAL LOCATION OF PIPING TO BE BY MECHANICAL PIPING CONTRACTOR.

INTERNAL DUCT INSULATION REQUIREMENTS:

1" DUCT LINER

A. ALL RECTANGULAR SUPPLY AIR DUCT FROM AHU'S. (BOTH MEDIUM PRESSURE UP STREAM & LOW PRESSURE DUCT DOWNSTREAM OF VAV'S).
B. ALL RECTANGULAR RETURN AIR DUCT UPSTREAM AND DOWNSTREAM OF RETURN FANS.
C. ALL MIXED AIR AND EXHAUST AIR PLENUMS. OUTDOOR AIR PLENUMS TO BE WRAPPED BY INSULATION SUB.
D. TOILET EXHAUST DUCT FROM EXHAUST GRILLE TO 10 FT UPSTREAM OF GRILLE.
E. ALL AIR TRANSFER DUCTS.

EXTERNAL DUCT INSULATION REQUIREMENTS:

BY MECHANICAL INSULATION SUBCONTRACTOR - (SEE SPEC. 15250 P.17)

a. ALL SUPPLY AIR DUCT NOT INTERNALLY LINED.
b. RELIEF DUCTS FROM MOTORIZED DAMPER TO RELIEF PLENUM.
c. PLENUMS. INCLUDING RELIEF AIR & OUTDOOR AIR.
d. DUCT MOUNTED COIL CASINGS.
e. COIL CASINGS.
f. OUTDOOR AIR INTAKE DUCTS.

GRAPHIC SCALE: 0 2 4 8 16 24 feet
1/8"=1'-0"

NORTH

Parrott Mechanical, Inc.
6600 N. GOVERNMENT WAY
COEUR D'ALENE, ID 83814
(208) 772-9571

ARCHITECT: RJA, P.S. ARCHITECTS
MECHANICAL ENGINEER: WOOD/HARBINGER, INC. CONSULTING ENGINEERS
GENERAL CONTRACTOR: OSWOOD CONSTRUCTION, INC.
MECH. PIPING CONTRACTOR: PARROTT MECHANICAL CO.
HVAC CONTRACTOR: PARROTT MECHANICAL, INC.

PROJECT TITLE: HVAC PLAN - FIRST FLOOR
KC-135 SQUADRON OPERATIONS/ AIRCRAFT MAINTENANCE UNIT
FAIRCHILD A.F.B. WASHINGTON

SHEET TITLE
HVAC AS-BUILT DRAWINGS
1ST FLOOR PLAN

PROJECT NO: 95018-C
DESIGNED BY: WOOD/HARBINGER
DRAWN BY: RAR
DATE: 07/18/99
CHECKED BY: MP

REVISIONS:

BY	NO	DATE
RAR	ONE	10/25/99

SHEET NO.
M2.1

BLDG. 2005

Parrott Mechanical, Inc.
6600 N. GOVERNMENT WAY
COEUR D'ALENE, ID 83814
(208) 772-9571

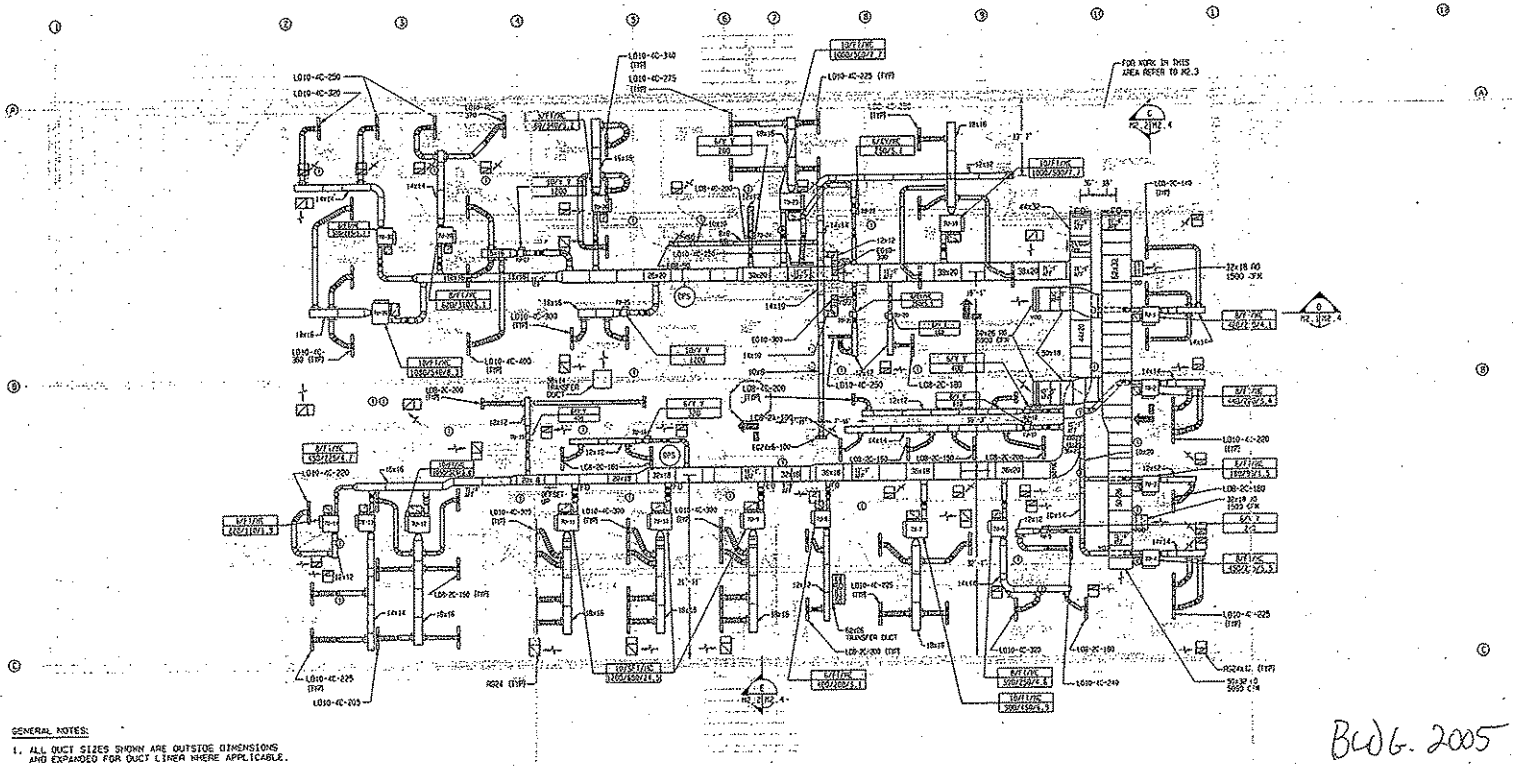

HVAC PLAN - SECOND FLOOR
SCALE: 1/8"=1'-0"

BLDG. 2005

GENERAL NOTES:

1. ALL DUCT SIZES SHOWN ARE OUTSIDE DIMENSIONS AND EXPANDED FOR DUCT LINER WHERE APPLICABLE.
2. MECHANICAL PIPING & EQUIPMENT SHOWN AS A REFERENCE ONLY ON THIS DRAWING. ACTUAL PIPING LOCATION TO BE BY MECHANICAL PIPING CONTRACTOR.
3. ACCESS DOORS WHETHER SHOWN OR NOT TO BE PROVIDED FOR ALL FIRE DAMPERS, FIRE-SMOKE DAMPERS, BACK-DRAFT DAMPERS AND ALL OTHER EQUIPMENT AS SPECIFIED.

INTERNAL DUCT INSULATION REQUIREMENTS:

1" DUCT LINER

A. ALL RECTANGULAR SUPPLY AIR DUCT FROM AHU'S. (BOTH MEDIUM PRESSURE UP STREAM & LOW PRESSURE DUCT DOWNSTREAM OF VAV'S)

B. ALL RECTANGULAR RETURN AIR DUCT UPSTREAM AND DOWNSTREAM OF RETURN FANS.

C. ALL MIXED AIR AND EXHAUST AIR PLENUMS. OUTDOOR AIR PLENUMS TO BE WRAPPED BY INSULATION SUB.

D. TOILET EXHAUST DUCT FROM EXHAUST GRILLE TO 10 FT UPSTREAM OF GRILLE.

E. ALL AIR TRANSFER DUCTS.

EXTERNAL DUCT INSULATION REQUIREMENTS:

BY MECHANICAL INSULATION SUBCONTRACTOR - (SEE SPEC. 15250 P.17)

a. ALL SUPPLY AIR DUCT NOT INTERNALLY LINED.
b. RELIEF DUCTS FROM MOTORIZED DAMPER TO RELIEF PLENUM.
c. PLENUMS, INCLUDING RELIEF AIR & OUTDOOR AIR.
d. DUCT MOUNTED COIL CASINGS.
e. COIL CASINGS.
f. OUTDOOR AIR INTAKE DUCTS.

GRAPHIC SCALE: 0 2 4 8 16 24 Feet
1/8"=1'-0"

NORTH

ARCHITECT: HJA, P.S. ARCHITECTS
MECHANICAL ENGINEER: HOOD/HARBINGER, INC. CONSULTING ENGINEERS
GENERAL CONTRACTOR: HOOD CONSTRUCTION, INC.
MECH. PIPING CONTRACTOR: BARRETT MECHANICAL CO.
HVAC CONTRACTOR: PARROTT MECHANICAL, INC.

PROJECT TITLE: HVAC PLAN - SECOND FLOOR
KC-135 SQUADRON OPERATIONS/ AIRCRAFT MAINTENANCE UNIT
FAIRCHILD A.F.B. WASHINGTON

SHEET TITLE
HVAC AS-BUILT DRAWINGS
2ND FLOOR PLAN

PROJECT NO: 38010-C
DESIGNED BY: HOOD/HARBINGER
DRAWN BY: RAR
DATE: 02/18/96
CHECKED BY: MP

REVISIONS

BY	NO	DATE
RAR	ONE	08/01/96
RAR	TWO	10/25/96

SHEET NO.
M2.2

BLDG. 2005

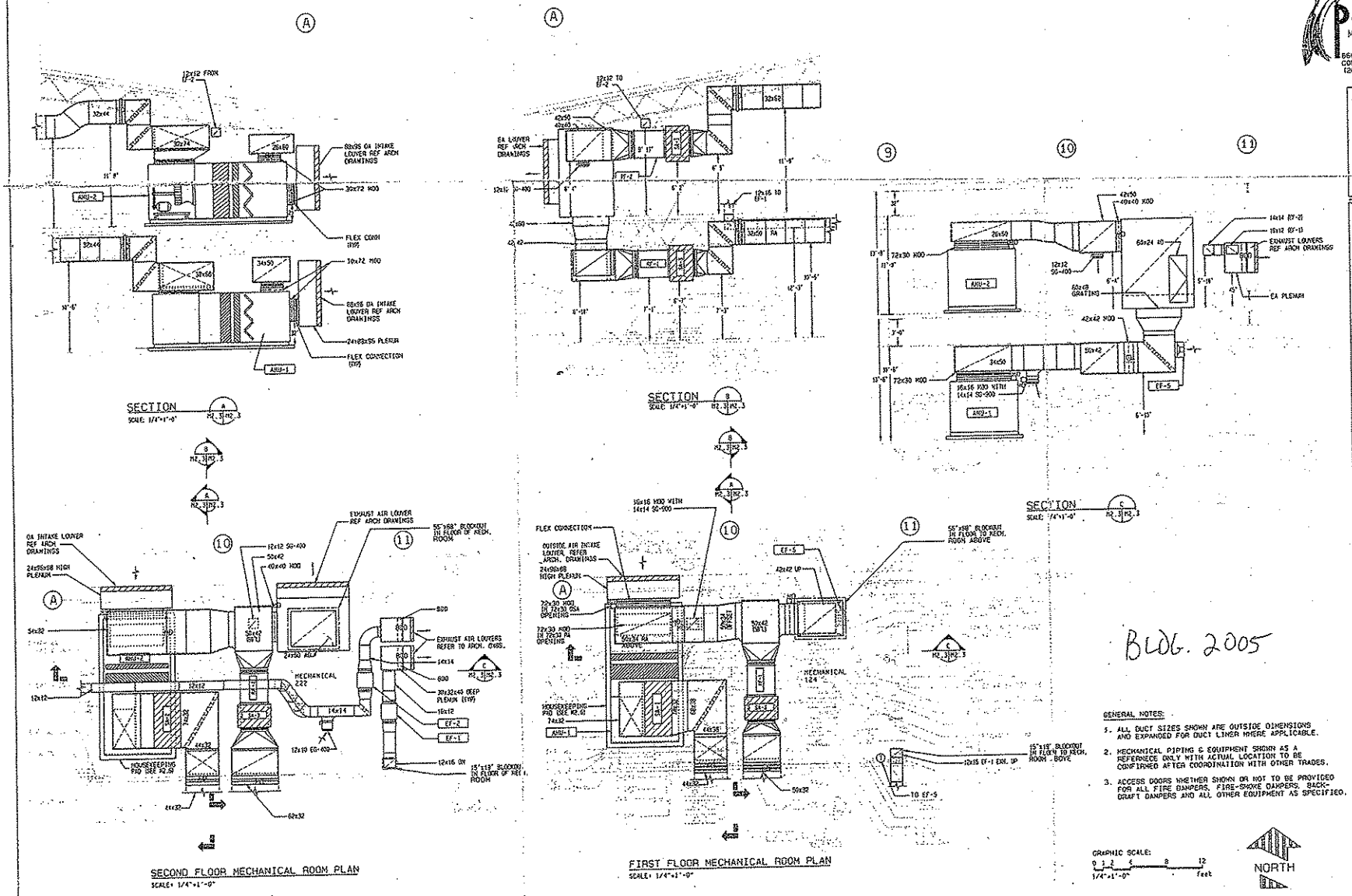

BLDG. 2005

GENERAL NOTES:

1. ALL DUCT SIZES SHOWN ARE OUTSIDE DIMENSIONS AND EXPANDED FOR DUCT LINER WHERE APPLICABLE.
2. MECHANICAL PIPING & EQUIPMENT SHOWN AS A REFERENCE ONLY WITH ACTUAL LOCATION TO BE CONFIRMED AFTER COORDINATION WITH OTHER TRADES.
3. ACCESS DOORS WHETHER SHOWN OR NOT TO BE PROVIDED FOR ALL FIRE DAMPERS, FIRE-SMOKE DAMPERS, BACK-DRAFT DAMPERS AND ALL OTHER EQUIPMENT AS SPECIFIED.

GRAPHIC SCALE: 0 1 2 4 8 12 feet 1/4"=1'-0"

NORTH

Parrott Mechanical, Inc.
6660 N. GOVERNMENT WAY
COEUR D'ALENE, ID 83814
(208) 772-9571

ARCHITECT: HJA, P.S. ARCHITECTS
MECHANICAL ENGINEER: WOOD/HARBINGER, INC. CONSULTING ENGINEERS
GENERAL CONTRACTOR: OSWOOD CONSTRUCTION
MECHANICAL CONTRACTOR: RAMSETT MECHANICAL CO.
HVAC CONTRACTOR: PARROTT MECHANICAL, INC.

PROJECT TITLE: HVAC - ENLARGED MECHANICAL ROOMS
KC-135 SQUADRON OPERATIONS/ AIRCRAFT MAINTENANCE UNIT
FAIRCHILD A.F.B. WASHINGTON

SHEET TITLE:
HVAC AS-BUILT DRAWINGS
1ST & 2ND FLOOR MECH. ROOMS

PROJECT NO	95010-C
DESIGNED BY	WOOD/HARBINGER
DRAWN BY	RAR
DATE	02/16/96
CHECKED BY	MB
	MP

REVISIONS

BY	NO	DATE
RAR	ONE	04/02/95
RAR	TWO	02/08/95
RAR	THREE	10/25/95

SHEET NO.
M2.3

5 of 7

REVISIONS				
SYMBOL	ZONE	DESCRIPTION	DATE	BY
1		REVISED AS-BUILT	10/21/96	RAC

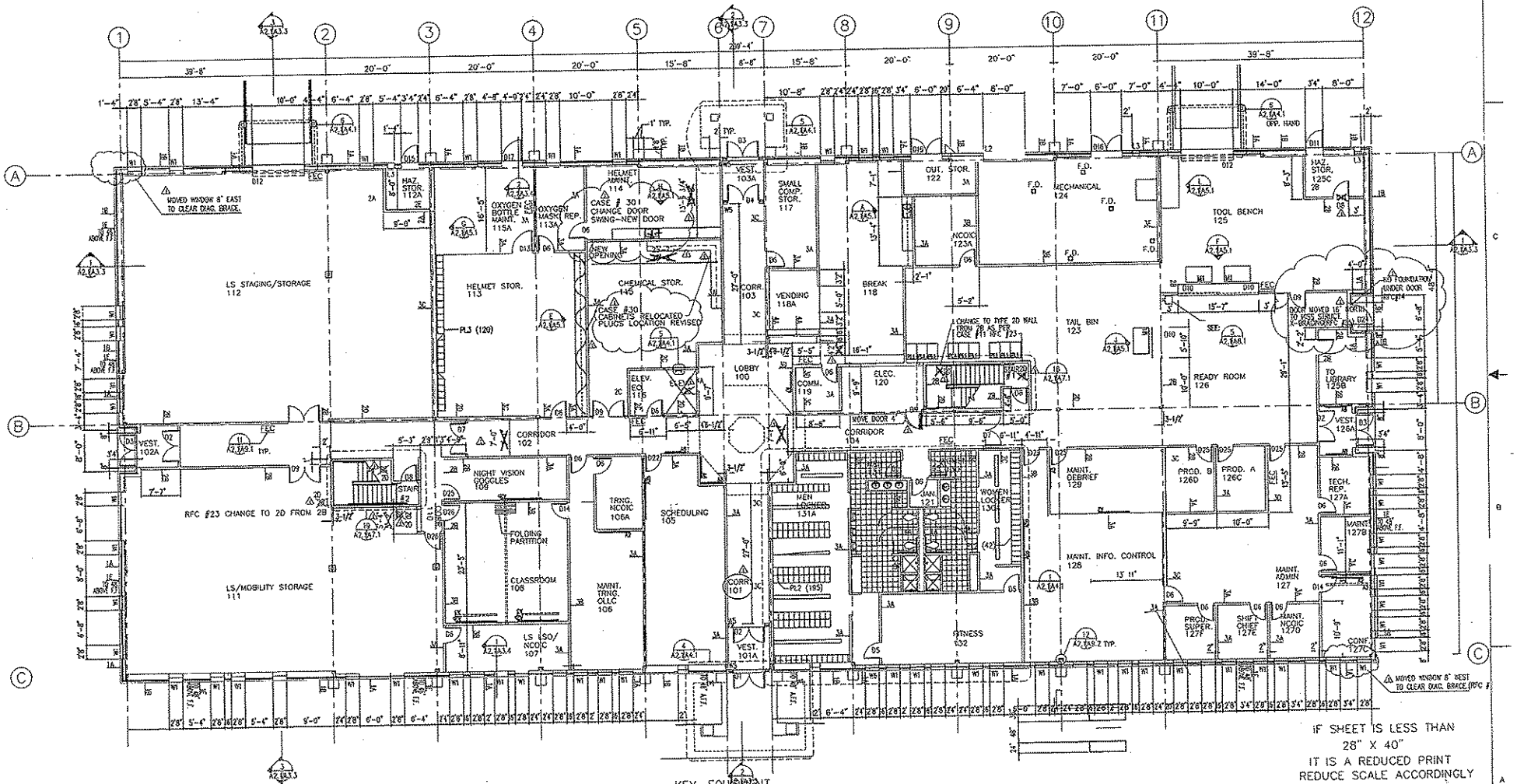

IF SHEET IS LESS THAN 28" X 40" IT IS A REDUCED PRINT REDUCE SCALE ACCORDINGLY

KEY: EQUIPMENT

A2 DRY ERASE BOARD 72"W X 48"H SEE: 14-A2.1/A9.1
A2a DRY ERASE BOARD 48"W X 36"H SEE: 14-A2.1/A9.1
A2b DRY ERASE BOARD 95"W X 48"H SEE: 14-A2.1/A9.1
A3 RECESSED PROJECTION SCREEN
A5 BULLETIN BOARD 48"W X 36"H SEE: 14-A2.1/A9.1 - FOR PLACEMENT
A5a BULLETIN BOARD 72"W X 48"H SEE: 14-A2.1/A9.1 - FOR PLACEMENT
A6 BULLETIN BOARD W/ GLASS DOORS 48"W X 36"H SEE: 13-A2.1/A9.1
A7 BUILDING DIRECTORY SEE: 10-A2.1/A9.3
PL1 LOCKERS 24"W X 36"D X 72"H - IPT-2
PL2 LOCKERS 12"W X 18"D X 36"H - IPT-2
PL3 LOCKERS 15"W X 15"D X 15"H - IPT-2
M1

FIRST FLOOR PLAN
F.F. 100'-0"

BLDG. 2005

TRUE NORTH FOR REFERENCE TO SITE ONLY

PROJECT NORTH

0 4' 8' 16' 1/8" = 1'-0"

REGISTERED ARCHITECT DANIEL F. CALLAY STATE OF WASHINGTON

A2.1

RIA ARCHITECTS-ENGINEERS SEATTLE, WASHINGTON

U.S. ARMY ENGINEER DISTRICT, SEATTLE CORPS OF ENGINEERS SEATTLE, WASHINGTON

FIRST FLOOR PLAN
SQUADRON OPERATIONS
AIRCRAFT MAINTENANCE UNIT
FAIRCHILD AFB WASHINGTON

SIZE	SCALE	FILE NO.	CODE	DATE
F		236s/141-10-05	13 JULY 95	A2.1

DSGN. AMC DWN. MT PART 25

AS-BUILT

REVISIONS				
SYMBOL	ZONE	DESCRIPTION	DATE	BY
1		REVISED AS-BUILT	10/21/96	RAC

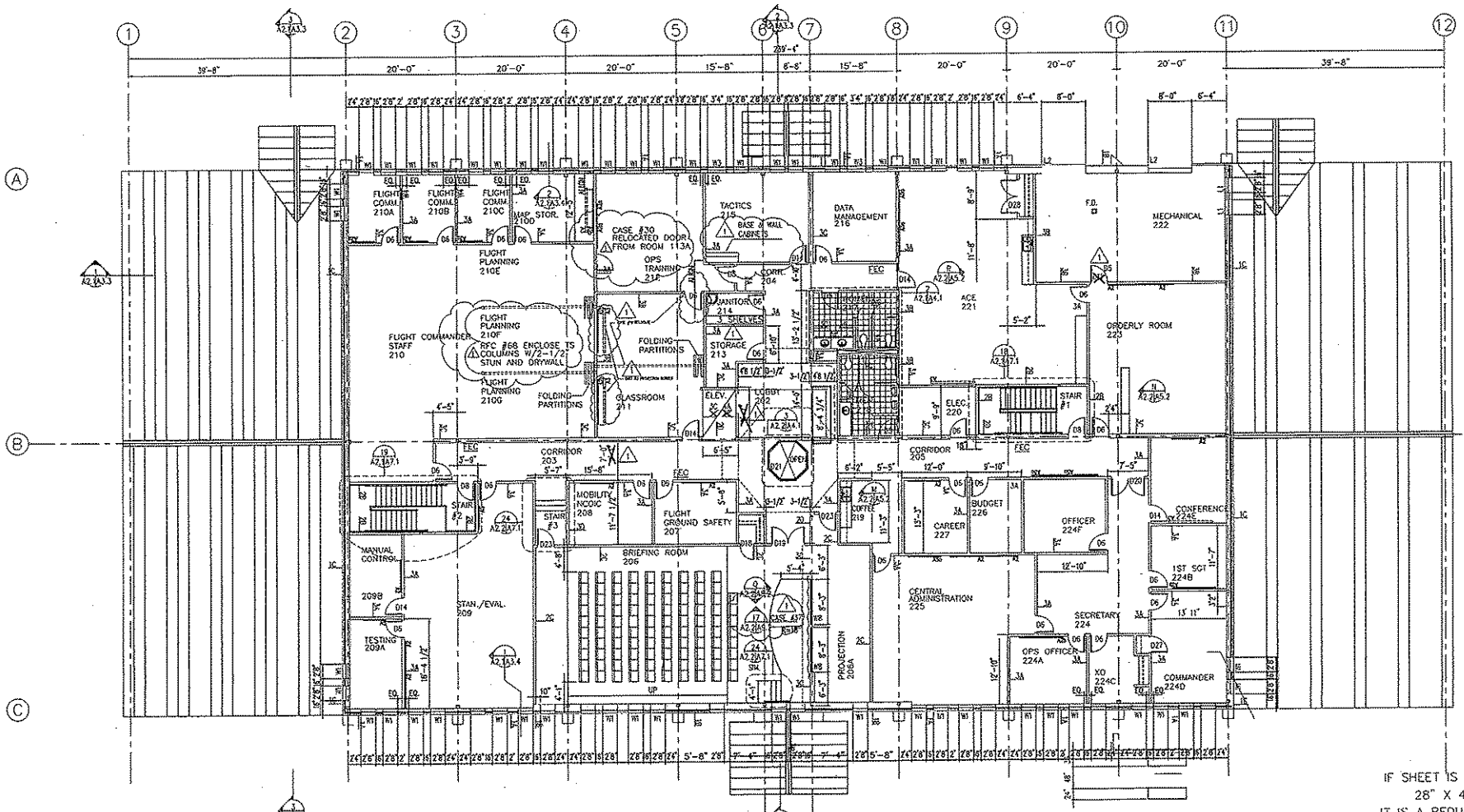

SECOND FLOOR PLAN

F.F. 114'-0"

KEY: EQUIPMENT

A2	DRY ERASE BOARD 72"W X 48"H	SEE: 14-A2.1/A9.1
A2a	DRY ERASE BOARD 48"W X 36"H	SEE: 14-A2.1/A9.1
A2b	DRY ERASE BOARD 96"W X 48"H	SEE: 14-A2.1/A9.1
A3	RECESSED PROJECTION SCREEN	
A5	BULLETIN BOARD 48"W X 36"H	SEE: 14-A2.1/A9.1 - FOR PLACEMENT
A5a	BULLETIN BOARD 72"W X 48"H	SEE: 14-A2.1/A9.1 - FOR PLACEMENT
A6	BULLETIN BOARD W/ GLASS DOORS 48"W X 36"H	SEE: 13-A2.1/A9.1
A7	BUILDING DIRECTORY	
PL1	LOCKERS 24"W X 36"D X 72"H	
PL2	LOCKERS 12"W X 18"D X 36"H	
PL3	LOCKERS 15"W X 15"D X 15"H	

BLDG. 2005

PROJECT NORTH

0 4' 8' 16' 1/8" = 1'-0"

REGISTERED ARCHITECT DANIEL P. CALLAN STATE OF WASHINGTON

A2.2

IF SHEET IS LESS THAN 28" X 40" IT IS A REDUCED PRINT REDUCE SCALE ACCORDINGLY

W.R. ARCHITECTS-ENGINEERS SEATTLE, WASHINGTON	U.S. ARMY ENGINEER DISTRICT, SEATTLE CORPS OF ENGINEERS SEATTLE, WASHINGTON

SECOND FLOOR PLAN
SQUADRON OPERATIONS
AIRCRAFT MAINTENANCE UNIT
FAIRCHILD AFB WASHINGTON

SIZE	REVISION NO.	FILE NO.	DATE	PLATE
F		236s/141-10-05	13 JULY 95	A2.2
DSGN. AMC		DWN. MT	SHEET 26	

AS-BUILT

BLDG. 2005

AIR HANDLING UNIT - FAN AND FILTER SCHEDULE

EQUIP NO	ARRGT/ DISCHARGE	MINIMUM OSA CFM (3)	FAN SECTION: AIRFLOW CFM (4)	FAN SECTION: EXT SP IN WG (1)	FAN SECTION: WHEEL DIA IN	FAN SECTION: MAX BHP	FAN SECTION: MOTOR HP	FILTER: TYPE	FILTER: EFF, %	FILTER: MAX FV FPM	FILTER: PD IN WG CLEAN	FILTER: PD IN WG FINAL (2)	REMARKS
AHU-1	AF/PLUG/SWSI	5,500	16,000	4.0	33	15.07	20	PLEATED THROWAWAY	30	240	0.2	0.60	VARIABLE SPEED DRIVE - PACE MODEL PF-33
AHU-2	AF/PLUG/SWSI	6,300	17,000	4.0	33	16.1	20	PLEATED THROWAWAY	30	255	0.2	0.60	VARIABLE SPEED DRIVE - PACE MODEL PF-33

NOTES:
(1) EXTERNAL TO FAN SECTION CABINET: NOT INCLUDING CABINET LOSSES.
(2) DESIGN CHANGE-OUT POINT.
(3) MINIMUM OSA CFM BASED ON MAXIMUM UNIT AIR FLOW
(4) AIRFLOWS, BHP AND PD BASED UPON FAIRCHILD AFB, WA. (ELEVATION 2462 FT)

AIR HANDLING UNIT - COIL SCHEDULE

EQUIP NO	AIRFLOW CFM (1)	CHILLED WATER COIL (2): EAT °F DB	EAT °F WB	LAT °F DB	LAT °F WB	MAX FV FPM	MAX AIR PD IN WG	H2O FLOW GPM	EWT °F	LWT °F	MAX H2O PD FT HD	HOT WATER COIL (3): EAT °F	LAT °F	MAX FV FPM	MAX AIR PD IN WG	H2O FLOW GPM	EWT °F	LWT °F	MAX H2O PD FT HD	REMARKS
AHU-1	16,000	84	66.2	59.0	57.9	546	0.8	110	45	53	12	40	67.2	515	0.16	36	180	154	4.4	
AHU-2	17,000	84	66.2	58.5	57.5	501	0.79	117	45	54	13	40	67.2	450	0.15	34	180	152	5.6	

NOTES:
(1) AIRFLOW AND PD BASED UPON FAIRCHILD AFB, WA. (ELEVATION 2462 FT)(2) 50% PROPYLENE GLYCOL BY WEIGHT. (3) 40% PROPYLENE GLYCOL BY WEIGHT.

FAN SCHEDULE

EQUIP NO	SERVICE	TYPE	WHEEL DIA. IN	ARRGT/ DISCHARGE	AIRFLOW CFM (2)	EXT SP IN WG (2)	RPM	MAX BHP (2)	MOTOR HP	DRIVE	REMARKS
EF-1	FIRST FLOOR EXHAUST	IN-LINE	13	HORIZ/HORIZ	1,235	0.75	1,442	0.32	1/2	BELT	GREENHECK BSQ-130-5
EF-2	SECOND FLOOR EXHAUST	IN-LINE	13	HORIZ/HORIZ	1,150	0.625	1,320	0.24	1/3	BELT	GREENHECK BSQ-130-3
EF-3	HAZ STOR 112A	UTILITY FAN	8	HORIZ/HORIZ	200	0.25	1,211	0.02	1/4	BELT	EXPLOSION PROOF GREENHECK S-1PA
EF-4	HAZ STOR 125C	UTILITY FAN	8	HORIZ/HORIZ	200	0.25	1,211	0.02	1/4	BELT	EXPLOSION PROOF GREENHECK S-1PA
EF-5	MECHANICAL 124	PROP	14	HORIZ/HORIZ	903	0.25	1,225	0.12	1/3	DIRECT	GREENHECK S21-14-426-43
RF-1	AHU-1	VANEAXIAL	36	HORIZ/HORIZ	14,000	1.5 (1)	1,170	4.17	7-1/2	DIRECT	VARIABLE SPEED DRIVE GREENHECK VAD-36F17-14-07
RF-2	AHU-2	VANEAXIAL	36	HORIZ/HORIZ	16,250	1.5 (1)	1,170	4.03	7-1/2	DIRECT	VARIABLE SPEED DRIVE GREENHECK VAD-36F17-17-07

NOTES:
(1) TOTAL PRESSURE
(2) AIRFLOW EXT SP/TP AND BHP BASED ON FAIRCHILD AFB, WA. (ELEVATION 2462 FT)

AIR TERMINAL UNIT SCHEDULE

EQUIP NO	TYPE (1)	AIRFLOW RANGE CFM (2)	INLET SIZE (5): AT UNIT, IN	INLET SIZE (5): RUNOUT DUCT, IN	OUTLET SIZE IN (6)	MAX SP DROP IN WG (5)	HEATING COIL: EAT	HEATING COIL: EWT	HEATING COIL: H2O FLOW GPM	HEATING COIL: MAX H2O PD FT	FAN: MOTOR HP	FAN: EXT SP IN WC (7)	FAN: MAX CFM	DISC RC RATING (4)	REMARKS
6	V V OR CV	0 TO 400	6"	8"	10x12	0.10	60	180	1.0	2.0	-	-	-	30	TEMPMASTER V2 & HVH2 SIZE B
8	V V OR CV	401 TO 800	8"	10"	12x12	0.10	60	180	2.0	2.0	-	-	-	30	TEMPMASTER V2 & HVH2 SIZE D
10	V V OR CV	801 TO 1,200	10"	12"	16x14	0.10	60	180	3.0	2.0	-	-	-	30	TEMPMASTER V2 & HVH2 SIZE E
12	V V OR CV	1,201 TO 1,800	12"	14"	20x14	0.10	60	180	4.0	3.0	-	-	-	26	(NOT USED)
6	FT	0 TO 400	6"	8"	10x10	0.20	60	180	1.0	2.0	1/10	0.30	(3)	20	TEMPMASTER HVFBH2 SIZE B
8	FT	401 TO 800	8"	10"	12x12	0.20	60	180	2.0	2.0	1/4	0.30	(3)	26	TEMPMASTER HVFBH2 SIZE D
10	FT	801 TO 1,200	10"	12"	16x14	0.15	60	180	3.0	2.0	1/4	0.30	(3)	29	TEMPMASTER HVFBH2 SIZE E
12	FT	1,201 TO 1,800	12"	14"	20x14	0.12	60	180	4.0	3.0	1/3	0.30	(3)	34	TEMPMASTER HVFBH2 SIZE F
6	SFT	0 TO 400	6"	8"	10x10	0.20	60	180	1.0	2.0	1/10	0.30	(3)	28	~~(NOT USED)~~ TEMPMASTER HVFSH2 SIZE B
8	SFT	401 TO 800	8"	10"	12x12	0.20	60	180	2.0	2.0	1/4	0.30	(3)	32	(NOT USED)
10	SFT	801 TO 1,200	10"	12"	16x14	0.15	60	180	3.0	2.0	1/3	0.30	(3)	35	TEMPMASTER HVFSH2 SIZE E

NOTES:
1. FT = FAN POWERED UNIT (PARALLEL): SFT = FAN POWERED UNIT (SERIES): V V = VARIABLE VOLUME UNIT: CV = CONSTANT VOLUME UNIT.
2. INDIVIDUAL TERMINAL UNIT MAX (COOLING CYCLE) AND MIN. (HEATING CYCLE) PRIMARY AIR FLOWS ARE INDICATED AT EACH UNIT ON FLOOR PLANS.
3. SERIES FAN TERMINAL: FAN CFM WILL BE EQUAL TO THE MAXIMUM PRIMARY AIR FLOW AS INDICATED ON THE FLOOR PLANS. PARALLEL FAN TERMINAL: DURING THE HEATING CYCLE, FAN CFM SHALL BE A MINIMUM 50% OF THE MAXIMUM PRIMARY AIR FLOW AS INDICATED AS INDICATED ON THE FLOOR PLANS.
4. DISCHARGE NC BASED ON MAX AIR FLOW 0.5" STATIC PRESSURE DROP, 5FT LINED DUCT, 6FT OF FLEXIBLE DUCT AND LINEAR DIFFUSER.
5. STATIC PRESSURE INCLUDES TERMINAL UNIT ONLY.
6. SUPPLY AIR DUCTWORK BASED UPON THESE NOMINAL INLET / OUTLET SIZES.
7. STATIC PRESSURE EXCLUDES TERMINAL UNIT.
8. FOR TERMINAL UNIT COIL PIPING CONNECTIONS, SEE DETAIL 1/MO.2.5

SOUND ATTENUATOR SCHEDULE

EQUIP. NO.	SERVICE	TYPE	LENGTH IN.	MAX FV FPM	DUCT SIZE, IN	MAX PD IN WG	63	125	250	500	1000	2000	4000	8000	REMARKS
							MINIMUM REQUIRED ACOUSTIC RATING dB RE 10⁻¹² W, OCTAVE BAND CENTER FREQUENCY HZ								
SA-1	AHU-1	RECTANGULAR	36	1100	30x72	0.25	5	7	16	19	17	12	9	10	COMMERCIAL ACOUSTICS MODEL SP-LFL
SA-2	AHU-2	RECTANGULAR	36	1150	30x72	0.25	5	7	16	19	17	12	9	10	COMMERCIAL ACOUSTICS MODEL SP-LFL
SA-3	RF-1, RF-2	RECTANGULAR	36	2000	36"	0.1	2	9	16	18	15	14	10	10	COMMERCIAL ACOUSTICS MODEL QIC-36)

AIR COOLED CHILLER SCHEDULE

EQUIP NO	TOTAL CAPACITY TONS	EVAPORATOR: H2O FLOW GPM (1)	EVAPORATOR: EWT °F	EVAPORATOR: LWT °F	EVAPORATOR: PD FT H2O (1)	AMBIENT DB TEMP. °F	FANS: NO	FANS: TYPE	FANS: MOTOR (S) HP, EA	MAX INPUT KW	EER	MINIMUM CAPACITY STEPS	REMARKS
CHLR-1	82	227	55	45	15	90	10	PROPELLER	1	100	10.4	5	

NOTES:
(1) PROPYLENE GLYCOL 50% BY VOLUME
(2) CAPACITY BASED ON FAIRCHILD AFB, WA. (ELEVATION 2462 FT)

EQUIPMENT SOUND POWER LEVEL AND ISOLATOR SCHEDULE

EQUIP. NO.	63	125	250	500	1000	2000	4000	8000	VIBRATION ISOLATOR: TYPE	MIN STATIC DEFLECTION, IN.
	MAX SOUND POWER LEVEL dB RE 10⁻¹² W, OCTAVE BAND CENTER FREQUENCY HZ									
AHU-1 (OUTLET)	77	82	78	75	73	67	64	60	(1)	0.75
AHU-2 (OUTLET)	77	82	78	76	75	69	65	61	(1)	2.5
RF-1	85	88	92	92	89	84	79	78	(2)	3.5
RF-2	87	90	94	94	91	86	81	80	(2)	2.5
EF-1	84	76	72	71	65	63	58	52	(2)	0.75
EF-2	83	74	66	63	57	57	50	43	(2)	0.75
AC-1	-	-	-	-	-	-	-	-	(3)	0.75
HWP-1,2	-	-	-	-	-	-	-	-	(3)	0.75
CHP-1,2	-	-	-	-	-	-	-	-	(3)	0.75
FT/SFT	-	-	-	-	-	-	-	-	(4)	0.25
CHLR-1	104	55	97	95	94	93	89	87	-	-

NOTES:
(1) INTERNALLY ISOLATED WITH SEISMICALLY RESTRAINED SPRING ISOLATORS.
(2) SPRING HANGERS
(3) INERTIA BASE WITH SPRING ISOLATORS AND SEISMIC SNUBBERS.
(4) NEOPRENE HANGERS

STEAM CONVERTOR SCHEDULE

EQUIP NO	TYPE	TUBE SIDE (HOT WATER): FLOW GPM	EWT °F	LWT °F	MAX PD FT HD	SHELL SIDE (STEAM): INPUT LB/HR	PRESSURE PSIG	REMARKS
HX-1	U-TUBE	125	160	180	2	1300	2	

(1) HOT WATER: 40% PROPYLENE GLYCOL BY VOLUME.

AIR COMPRESSOR AND AIR DRYER SCHEDULE

EQUIP. NO.	SERVICE	TYPE	NOMINAL CAPACITY SCFM	AIR DELIVERY PRES. PSIG	CPRSR MOTOR HP	TANK GAL	REMARKS
AC-1	OXYGEN BOTTLE MAINT.	RECIPROCATING	11	110	3	80	DUPLEX TANK MOUNTED
AD-1	AC-1	REFRIGERATED	11	-	1/5	-	CAPACITY AT 35-39F DEW POINT AND 100F ENTERING AIR

PUMP SCHEDULE

EQUIP NO	SERVICE	TYPE	FLOW GPM	TOTAL DYNAMIC HD FT H2O	RPM	MIN EFF %	MOTOR HP	REMARKS
HWP-1,2	HEATING WATER SYS	END SUCTION	164 (1)	65.0	1,750	70	5.0	
CHP-1,2	CHILLED WATER SYS	END SUCTION	227 (2)	65.0	1,750	75	7.5	
CR-1	CONDENSATE UNIT	CLOSE COUPLED	9	115.0	3,450	--	1-1/2	DUPLEX WITH 15 GALLON RECEIVER

NOTES:
(1) HEATING WATER SYSTEM - PROPYLENE GLYCOL 40% BY VOLUME
(2) CHILLED WATER SYSTEM - PROPYLENE GLYCOL 50% BY VOLUME

CONVECTOR SCHEDULE

EQUIP. NO.	SERVICE	CAPACITY MBH	AVG H2O TEMP °F	H2O FLOW GPM	SIZE: LENGTH FT-IN	SIZE: WIDTH IN	SIZE: HEIGHT IN	REMARKS
C-1	VESTIBULE 102A	8.3	170	1.0	48	6	32	
C-2	VESTIBULE 103A	8.3	170	1.0	48	6	32	
C-3	VESTIBULE 126A	8.3	170	1.0	48	6	32	
C-4	VESTIBULE 101A	8.3	170	1.0	48	6	32	
C-5	OUT STOR 122	9.3	170	1.0	48	6	32	

NOTE: FOR CONVECTOR PIPING CONNECTIONS, SEE DETAIL

BLDG. 2005

EXPANSION TANK SCHEDULE

EQUIP NO	SERVICE	TYPE	EXP GAL	ACCEPTANCE GALLONS	CHARGE PSIG	MAX SIZE, IN.: DIA	MAX SIZE, IN.: LENGTH/HEIGHT	REMARKS
ET-1	HEATING WATER SYSTEM	DIAPHRAGM	3	11	12	16	45	HORIZONTAL
ET-2	CHILLED WATER SYSTEM	DIAPHRAGM	7.5	2.5	20	12	13	HORIZONTAL

NOTE:
1. REFER TO PLUMBING DRAWING PO.1 FOR ADDITIONAL SCHEDULES.

Parrott Mechanical, Inc.
6600 N. GOVERNMENT WAY
COEUR D'ALENE, ID 83814
(208) 772-9571

ARCHITECT: HJA, P.S. ARCHITECTS
MECHANICAL ENGINEER: WOOD/HARBINGER, INC. CONSULTING ENGINEERS
GENERAL CONTRACTOR: OSWOOD CONSTRUCTION, INC.
MECH. PIPING CONTRACTOR: RAMSEY MECHANICAL CO.
HVAC CONTRACTOR: PARROTT MECHANICAL, INC.

PROJECT TITLE: MECHANICAL EQUIPMENT SCHEDULES
KC-135 SQUADRON OPERATIONS/ AIRCRAFT MAINTENANCE UNIT
FAIRCHILD A.F.B. WASHINGTON

SHEET TITLE
HVAC AS-BUILT DRAWINGS
MECHANICAL EQUIPMENT SCHEDULES

PROJECT NO: 96010-C
DESIGNED BY: WOOD/HARBINGER
DRAWN BY: RAR
DATE: 08/01/96
CHECKED BY: MP

REVISIONS:
BY	NO	DATE
RAR	ONE	10/25/96

SHEET NO.
MO.2
2 OF 7

BLDG. 2005

Parrott Mechanical, Inc.
6600 N. GOVERNMENT WAY
COEUR D'ALENE, ID 83814
(208) 772-9571

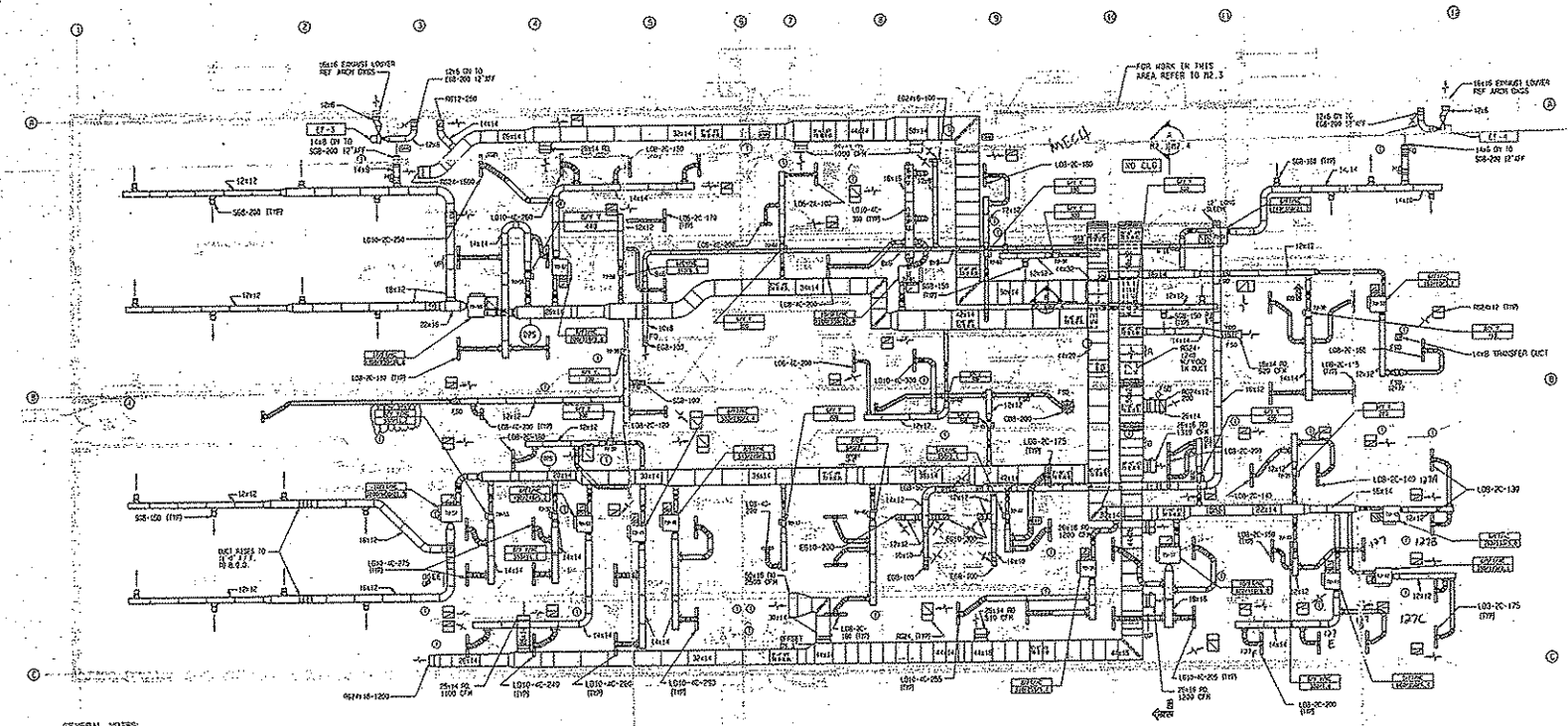

HVAC PLAN - FIRST FLOOR
SCALE: 1/8"=1'-0"

BLDG. 2005

GENERAL NOTES:

1. ALL DUCT SIZES SHOWN ARE OUTSIDE DIMENSIONS AND EXPANDED FOR DUCT LINER WHERE APPLICABLE.
2. MECHANICAL PIPING & EQUIPMENT SHOWN AS A REFERENCE ONLY ON THIS DRAWING. ACTUAL PIPING LOCATION TO BE BY MECHANICAL PIPING CONTRACTOR.
3. ACCESS DOORS WHETHER SHOWN OR NOT TO BE PROVIDED FOR ALL FIRE DAMPERS, FIRE-SMOKE DAMPERS, BACK-DRAFT DAMPERS AND ALL OTHER EQUIPMENT AS SPECIFIED.
4. MECHANICAL PIPING SHOWN AS REFERENCE ONLY. ACTUAL LOCATION OF PIPING TO BE BY MECHANICAL PIPING CONTRACTOR.

INTERNAL DUCT INSULATION REQUIREMENTS:

1" DUCT LINER

A. ALL RECTANGULAR SUPPLY AIR DUCT FROM AHU'S. (BOTH MEDIUM PRESSURE UP STREAM & LOW PRESSURE DUCT DOWNSTREAM OF VAV'S)
B. ALL RECTANGULAR RETURN AIR DUCT UPSTREAM AND DOWNSTREAM OF RETURN FANS.
C. ALL MIXED AIR AND EXHAUST AIR PLENUMS. OUTDOOR AIR PLENUMS TO BE WRAPPED BY INSULATION SUB.
D. TOILET EXHAUST DUCT FROM EXHAUST GRILLE TO 10 FT UPSTREAM OF GRILLE.
E. ALL AIR TRANSFER DUCTS.

EXTERNAL DUCT INSULATION REQUIREMENTS:

BY MECHANICAL INSULATION SUBCONTRACTOR - (SEE SPEC. 15250 P.17)

a. ALL SUPPLY AIR DUCT NOT INTERNALLY LINED.
b. RELIEF DUCTS FROM MOTORIZED DAMPER TO RELIEF PLENUM.
c. PLENUMS, INCLUDING RELIEF AIR & OUTDOOR AIR.
d. DUCT MOUNTED COIL CASINGS.
e. COIL CASINGS.
f. OUTDOOR AIR INTAKE DUCTS.

GRAPHIC SCALE: 0 3 4 8 16 24 feet
1/8"=1'-0"

NORTH

ARCHITECT: HJA, P.S. ARCHITECTS
MECHANICAL ENGINEER: HOOD/HARBINGER, INC. CONSULTING ENGINEERS
GENERAL CONTRACTOR: OSWOOD CONSTRUCTION, INC.
MECH. PIPING CONTRACTOR: PARROTT MECHANICAL CO.
HVAC CONTRACTOR: PARROTT MECHANICAL, INC.

PROJECT TITLE: HVAC PLAN - FIRST FLOOR
KC-135 SQUADRON OPERATIONS/ AIRCRAFT MAINTENANCE UNIT
FAIRCHILD A.F.B. WASHINGTON

SHEET TITLE
HVAC AS-BUILT DRAWINGS
1ST FLOOR PLAN

PROJECT NO: 95010-C
DESIGNED BY: HOOD/HARBINGER
DRAWN BY: RAR
DATE: 07/18/96
CHECKED BY: HP

REVISIONS:

BY	NO	DATE
RAR	ONE	10/25/96

SHEET NO.
M2.1

BLDG. 2005

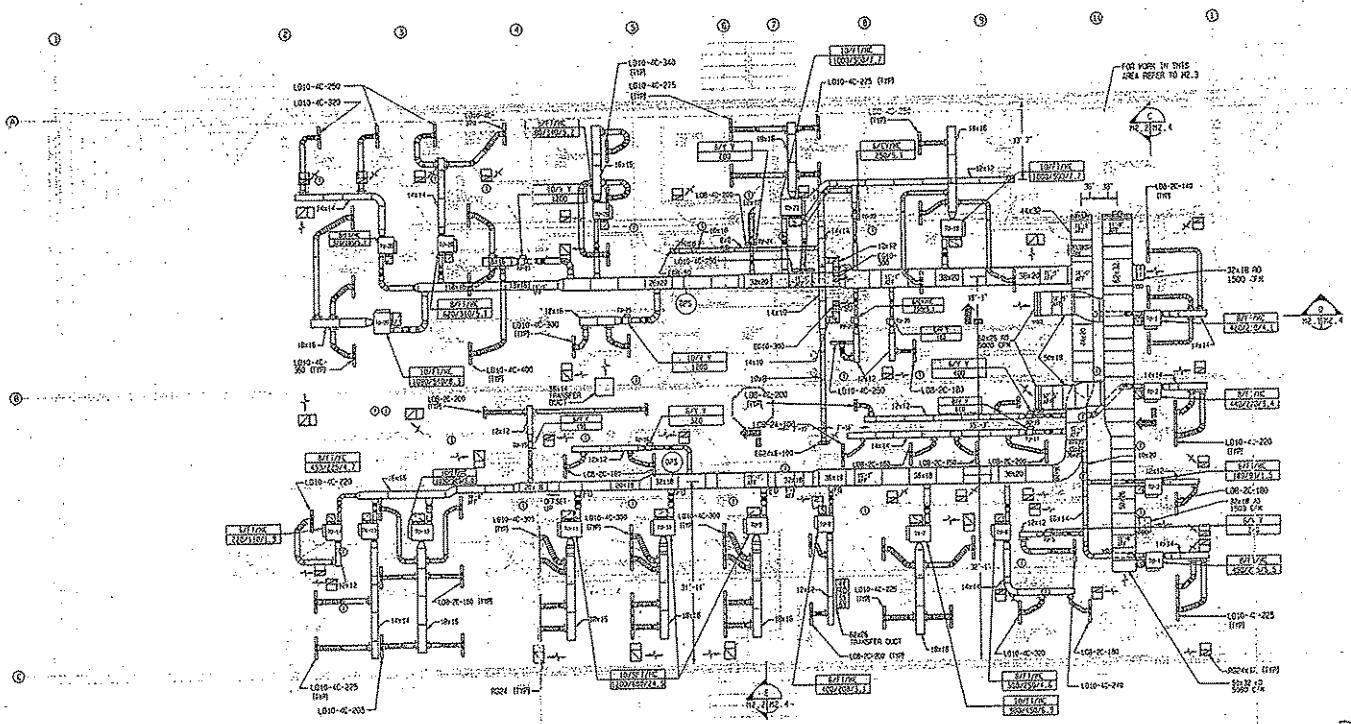

HVAC PLAN - SECOND FLOOR
SCALE: 1/8"=1'-0"

BLDG. 2005

GENERAL NOTES:

1. ALL DUCT SIZES SHOWN ARE OUTSIDE DIMENSIONS AND EXPANDED FOR DUCT LINER WHERE APPLICABLE.
2. MECHANICAL PIPING & EQUIPMENT SHOWN AS A REFERENCE ONLY ON THIS DRAWING. ACTUAL PIPING LOCATION TO BE BY MECHANICAL PIPING CONTRACTOR.
3. ACCESS DOORS WHETHER SHOWN OR NOT TO BE PROVIDED FOR ALL FIRE DAMPERS, FIRE-SMOKE DAMPERS, BACK-DRAFT DAMPERS AND ALL OTHER EQUIPMENT AS SPECIFIED.

INTERNAL DUCT INSULATION REQUIREMENTS:

1" DUCT LINER

A. ALL RECTANGULAR SUPPLY AIR DUCT FROM AHU'S. (BOTH MEDIUM PRESSURE UP STREAM & LOW PRESSURE DUCT DOWNSTREAM OF VAV'S)

B. ALL RECTANGULAR RETURN AIR DUCT UPSTREAM AND DOWNSTREAM OF RETURN FANS.

C. ALL MIXED AIR AND EXHAUST AIR PLENUMS. OUTDOOR AIR PLENUMS TO BE WRAPPED BY INSULATION SUB.

D. TOILET EXHAUST DUCT FROM EXHAUST GRILLE TO 10 FT UPSTREAM OF GRILLE.

E. ALL AIR TRANSFER DUCTS.

EXTERNAL DUCT INSULATION REQUIREMENTS:

BY MECHANICAL INSULATION SUBCONTRACTOR - (SEE SPEC. 15250 P.17)

a. ALL SUPPLY AIR DUCT NOT INTERNALLY LINED.

b. RELIEF DUCTS FROM MOTORIZED DAMPER TO RELIEF PLENUM.

c. PLENUMS, INCLUDING RELIEF AIR & OUTDOOR AIR.

d. DUCT MOUNTED COIL CASINGS.

e. COIL CASINGS.

f. OUTDOOR AIR INTAKE DUCTS.

GRAPHIC SCALE: 0 2 4 8 16 24 Feet
1/8"=1'-0"

NORTH

Parrott Mechanical, Inc.
6600 N. GOVERNMENT WAY
COEUR D'ALENE, ID 83814
(208) 772-9571

ARCHITECT: WJA, P.S. ARCHITECTS
MECHANICAL ENGINEER: WOOD/HARBINGER, INC. CONSULTING ENGINEERS
GENERAL CONTRACTOR: SIMCOO CONSTRUCTION, INC
MECH. PIPING CONTRACTOR: RAMSETT MECHANICAL CO.
HVAC CONTRACTOR: PARROTT MECHANICAL, INC.

PROJECT TITLE: HVAC PLAN - SECOND FLOOR
KC-135 SQUADRON OPERATIONS/ AIRCRAFT MAINTENANCE UNIT
FAIRCHILD A.F.B. WASHINGTON

SHEET TITLE
HVAC AS-BUILT DRAWINGS
2ND FLOOR PLAN

PROJECT NO: 95010-C
DESIGNED BY: WOOD/HARBINGER
DRAWN BY: RAR
DATE: 02/18/96
CHECKED BY: MP

REVISIONS:

BY	NO	DATE
RAR	ONE	08/01/96
RAR	TWO	10/25/96

SHEET NO.
M2.2

4 OF 7

BLDG. 2005

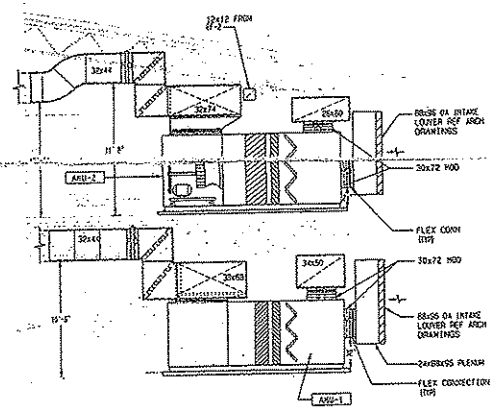

SECTION A
SCALE: 1/4"=1'-0"

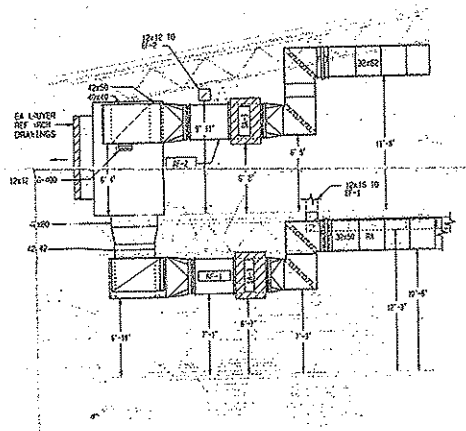

SECTION B
SCALE: 1/4"=1'-0"

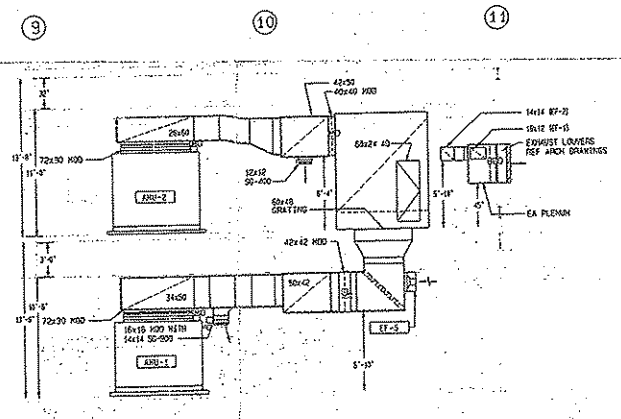

SECTION C
SCALE: 1/4"=1'-0"

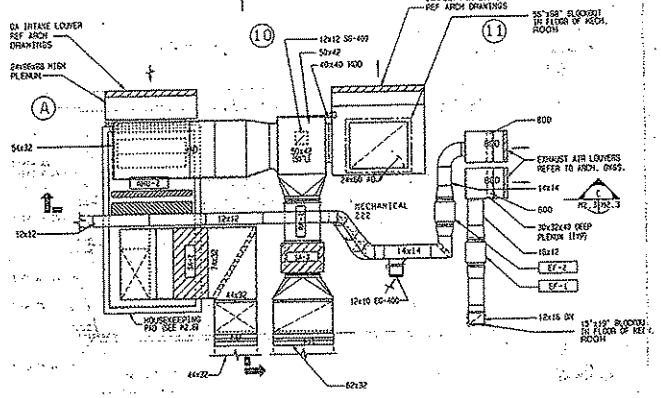

SECOND FLOOR MECHANICAL ROOM PLAN
SCALE: 1/4"=1'-0"

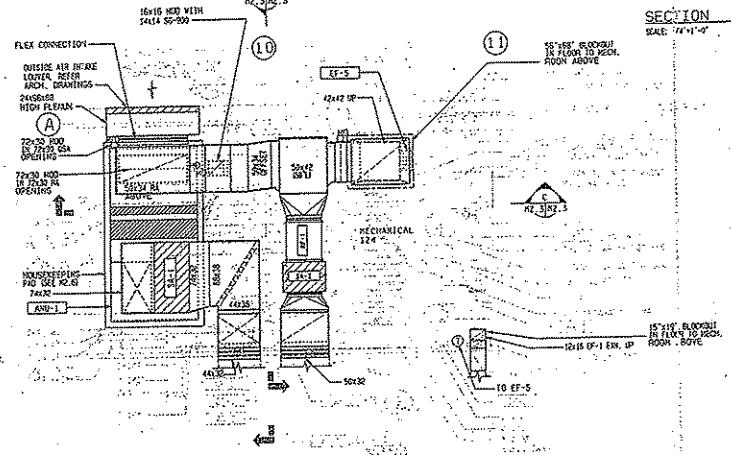

FIRST FLOOR MECHANICAL ROOM PLAN
SCALE: 1/4"=1'-0"

BLDG. 2005

GENERAL NOTES:

1. ALL DUCT SIZES SHOWN ARE OUTSIDE DIMENSIONS AND EXPANDED FOR DUCT LINER WHERE APPLICABLE.
2. MECHANICAL PIPING & EQUIPMENT SHOWN AS A REFERENCE ONLY WITH ACTUAL LOCATION TO BE CONFIRMED AFTER COORDINATION WITH OTHER TRADES.
3. ACCESS DOORS WHETHER SHOWN OR NOT TO BE PROVIDED FOR ALL FIRE DAMPERS, FIRE-SMOKE DAMPERS, BACK-DRAFT DAMPERS AND ALL OTHER EQUIPMENT AS SPECIFIED.

GRAPHIC SCALE: 0 1 2 4 8 12 Feet
1/4"=1'-0"

NORTH

Parrott Mechanical, Inc.
8500 N. GOVERNMENT WAY
COEUR D'ALENE, ID 83814
(208) 772-9071

ARCHITECT: HJA, P.S. ARCHITECTS
MECHANICAL ENGINEER: HOOD/HARBINGER, INC. CONSULTING ENGINEERS
GENERAL CONTRACTOR: OSWOOD CONSTRUCTION
MECHANICAL CONTRACTOR: RANSETT MECHANICAL CO.
HVAC CONTRACTOR: PARROTT MECHANICAL, INC.

PROJECT TITLE: HVAC - ENLARGED MECHANICAL ROOMS
KC-135 SQUADRON OPERATIONS/ AIRCRAFT MAINTENANCE UNIT
FAIRCHILD A.F.B. WASHINGTON

SHEET TITLE: HVAC AS-BUILT DRAWINGS
1ST & 2ND FLOOR MECH. ROOMS

PROJECT NO	96010-C
DESIGNED BY	HOOD/HARBINGER
DRAWN BY	RAR
DATE	06/16/96
CHECKED BY	WR
	HP

REVISIONS

BY	NO	DATE
RAR	ONE	06/02/96
RAR	TWO	08/08/96
RAR	THREE	10/15/96

SHEET NO. M2.3
5 of 7

TRUNK LAYOUT – BLDG.2005

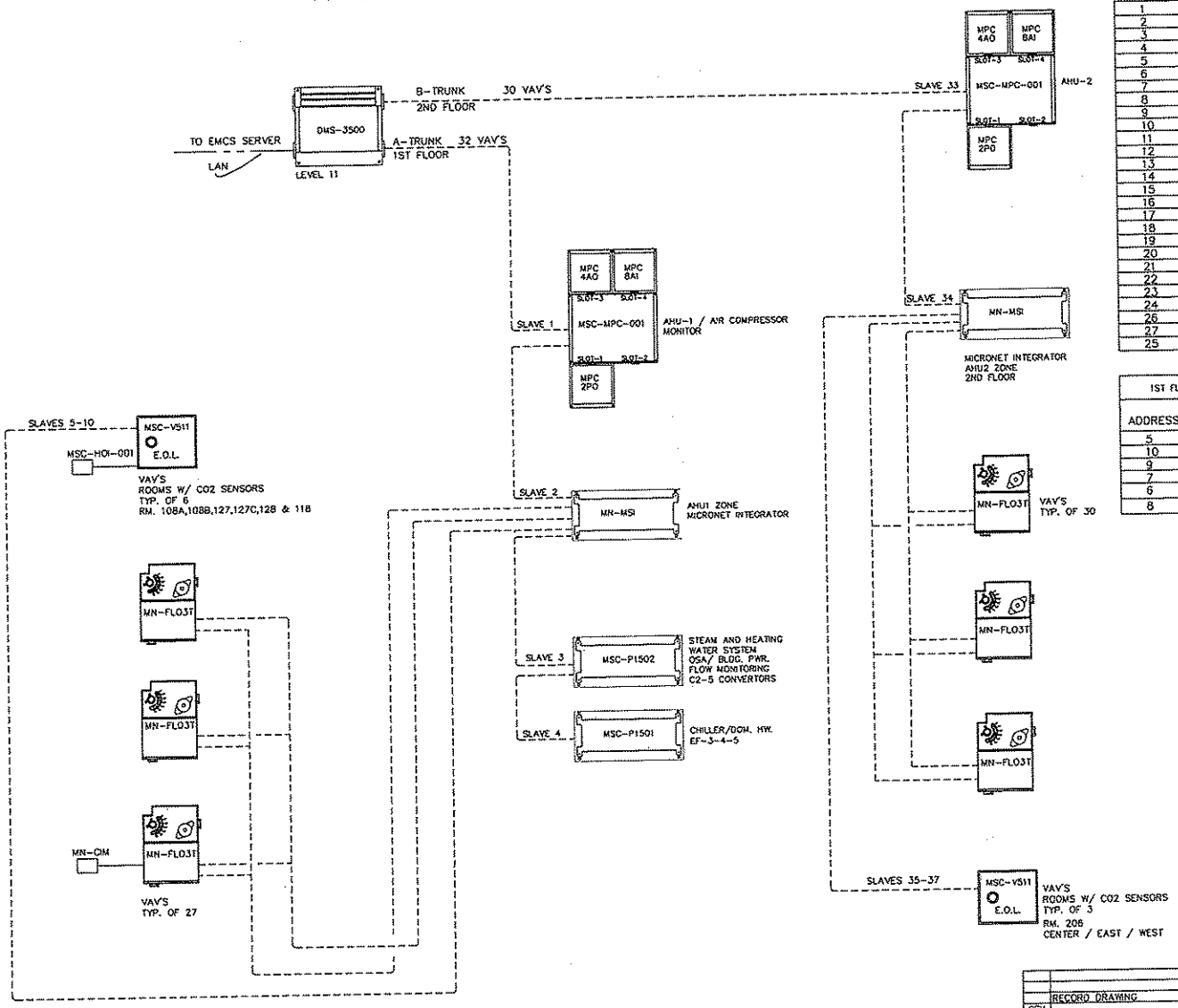

1ST FLOOR VAV SCHEDULE MICRONET CONTROLLERS			
ADDRESS #	ROOM #	FAN TYPE S-SERIES P-PARRALLEL	UNIT #
1	125	P	TU-31
2	123S	–	TU-35
3	123N	–	TU-34
4	123A	–	TU-63
5	120	–	TU-62
6	103A	–	TU-60
7	102	–	TU-59
8	115	–	TU-58
9	113A	P	TU-57
10	113	–	TU-56
11	112	P	TU-55
12	111	P	TU-54
13	107	P	TU-51
14	106A	–	TU-50
15	106	P	TU-49
16	105	P	TU-48
17	101	–	TU-47
18	131A	–	TU-46
19	130A	–	TU-44
20	104	–	TU-45
21	132	P	TU-36
22	129	–	TU-38
23	127E	P	TU-41
24	127B	P	TU-43
26	125B	P	TU-33
27	126	–	TU-32
25	126C	–	TU-39

2ND FLOOR VAV SCHEDULE MICRONET CONTROLLERS			
ADDRESS #	ROOM #	FAN TYPE S-SERIES P-PARRALLEL	UNIT #
1	223	P	TU-01
2	224E	P	TU-02
3	224B	P	TU-03
4	224D	P	TU-04
5	224	–	TU-05
6	224A	P	TU-06
7	225	P	TU-07
8	206A	P	TU-08
12	209	P	TU-12
13	209A	P	TU-13
14	209B	P	TU-14
15	203	–	TU-15
16	208	–	TU-16
17	224F	–	TU-17
18	205	–	TU-18
19	221	P	TU-19
20	220	–	TU-20
21	218	–	TU-21
22	217	–	TU-22
23	215	P	TU-23
24	204	–	TU-24
25	211	–	TU-25
26	212	P	TU-26
27	210E	–	TU-27
28	210C	P	TU-28
29	210	P	TU-29
30	210A	–	TU-30

1ST FLOOR VAV SCHEDULE MSC-V511 CONTROLLERS			
ADDRESS #	ROOM #	TYPE S-SERIES P-PARRALLEL	UNIT #
5	118	S	TU-61
10	108A	–	TU-53
9	108B	–	TU-52
7	127	–	TU-40
6	127C	S	TU-42
8	128	P	TU-37

2ND FLOOR VAV SCHEDULE MSC-V511 CONTROLLERS			
ADDRESS #	ROOM #	TYPE S-SERIES P-PARRALLEL	UNIT #
35	206	S	TU-09
36	206C	S	TU-10
37	206	S	TU-11

REV No.	DESCRIPTION	REV DATE	APPROVALS
	RECORD DRAWING	10.31.96	

-REVISIONS-

SIEBE ENVIRONMENTAL CONTROLS

SIEBE ENVIROMENTAL CONTROLS
3915 E. MAIN
SPOKANE, WA. 99202

DESCRIPTION: TRUNK LAYOUT – BLDG.2005

JOB NAME: SQUAD OPS/AMU
LOCATION: F.A.F.B. SPOKANE, WA.
ARCHITECT: WJA PS
ENGINEER: WOOD / HARBINGER INC.
CONTRACTOR: RAMSETT MECHANICAL
ENGR'D BY: R.RHODES
CHECKED BY: D.DARLING
PROJECT NO.: 965-95013-34
DRAWN BY: D.A.S.

DRAWING NO. 95013-1.DWG
DATE 2.19.96 SHEET 1 OF 6

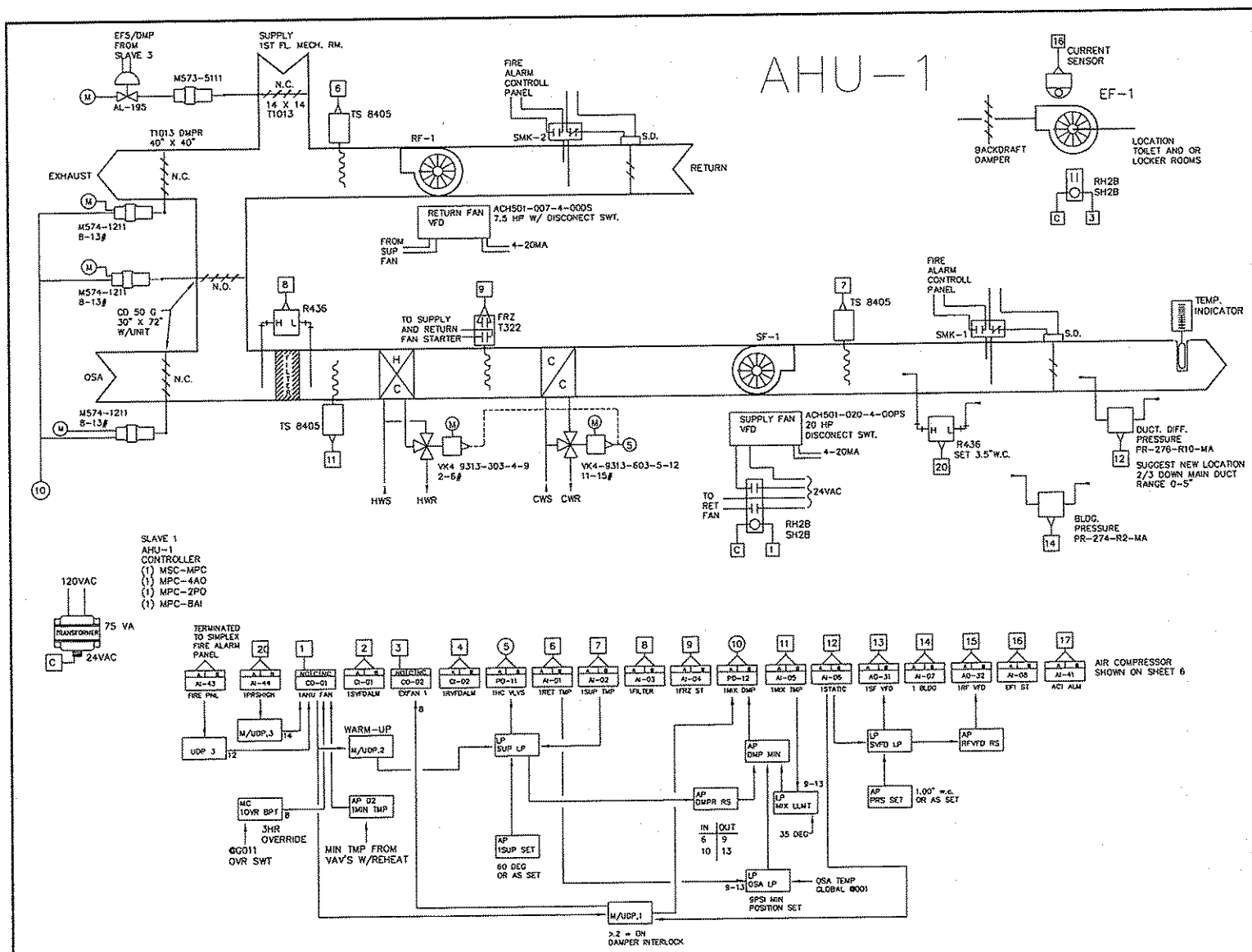

Sequence of operation AHU-1 / RF-1:

The Siebe automation control system will utilize optimal start, occupied and unoccupied modes of control.

Optimal start/warm-up mode: The Siebe automation system will calculate the outside air temp. and the space temperature to start the fan systems to bring the space temperatures up to occupied setpoint at the latest possible time.

During optimal start/warm-up the dampers will be positioned to full recirculation, variable frequency controlling to duct static pressure, the cooling valve in full bypass with the associated exhaust fans off and primary dampers of vav dampers open 100% supply air shall be set at 80 deg.

Occupied mode: The supply and return fans will operate continuously. Exhaust fan 1 shall be on. The dampers positioned to minimum outside air as set thru by balancing contractor. The heating valve, osa/return/relief dampers and cooling valve will modulate in sequence to maintain 60 degree supply air temperature. A call for heating will modulate the heating valve open with the dampers positioned to minimum. A call for cooling will modulate the dampers from minimum to 100% outside air, a further call for cooling will modulate the cooling valve open. The dampers will be positioned to minimum when the outside air temperature is greater than the return air temperature. Minimum supply air temperature will be limited to 60 degrees.

Ventilation mode: The Siebe controller will position dampers to maintain 5500 cfm minimum outside air during the ventilation mode.

Supply air static pressure control: A duct static pressure sensor located 2/3 down the longest supply duct run will signal the Siebe controller. The supply fan variable frequency drive will be utilized to maintain 1.25" w.c.

Return fan control: The Siebe controller will utilize the variable frequency drive to maintain differential cfm between the supply and return. Differential cfm offset will be based on the total of non-recirculated exhaust air cfm and pressurization cfm. CFM offset will be established during air balance.

A freeze protection thermostat located on the discharge side of the heating coil will stop the supply and return fans if 40 degree discharge air is sensed. A alarm will be generated to the Siebe automation system.

A duct smoke detector thru the fire alarm system will shutdown the air handler upon detection of smsoke and the smoke isolation dampers will close.

A high duct static pressure switch will shutdown the air handler if duct discharge static pressure exceeds 3.5" w.c.

Exhaust fan 1: Exhaust fan will be on during occupied mode of AHU-1 and off during unoccupied mode of AHU-1.

BLDG.2005

REV No.	DESCRIPTION	REV DATE	APPROVALS
	RECORD DRAWING	10.31.96	

-REVISIONS-

SIEBE ENVIRONMENTAL CONTROLS

SIEBE ENVIRONMENTAL CONTROLS
3915 E. MAIN
SPOKANE, WA. 99202

DESCRIPTION: AHU-1 - BLDG.2005

JOB NAME	SQUAD OPS/AMU
LOCATION	F.A.F.B. SPOKANE, WA.
ARCHITECT	WLA PS
ENGINEER	WOOD / HARBINGER INC.
CONTRACTOR	RAMSETT MECHANICAL
ENGR'D BY	R.RHODES
CHECKED BY	D.DARLING
PROJECT NO.	965-95013-34
DRAWN BY	D.A.S.

DRAWING NO. 95013-2.DWG

DATE 2.19.95 SHEET 2 OF 6

AHU-2

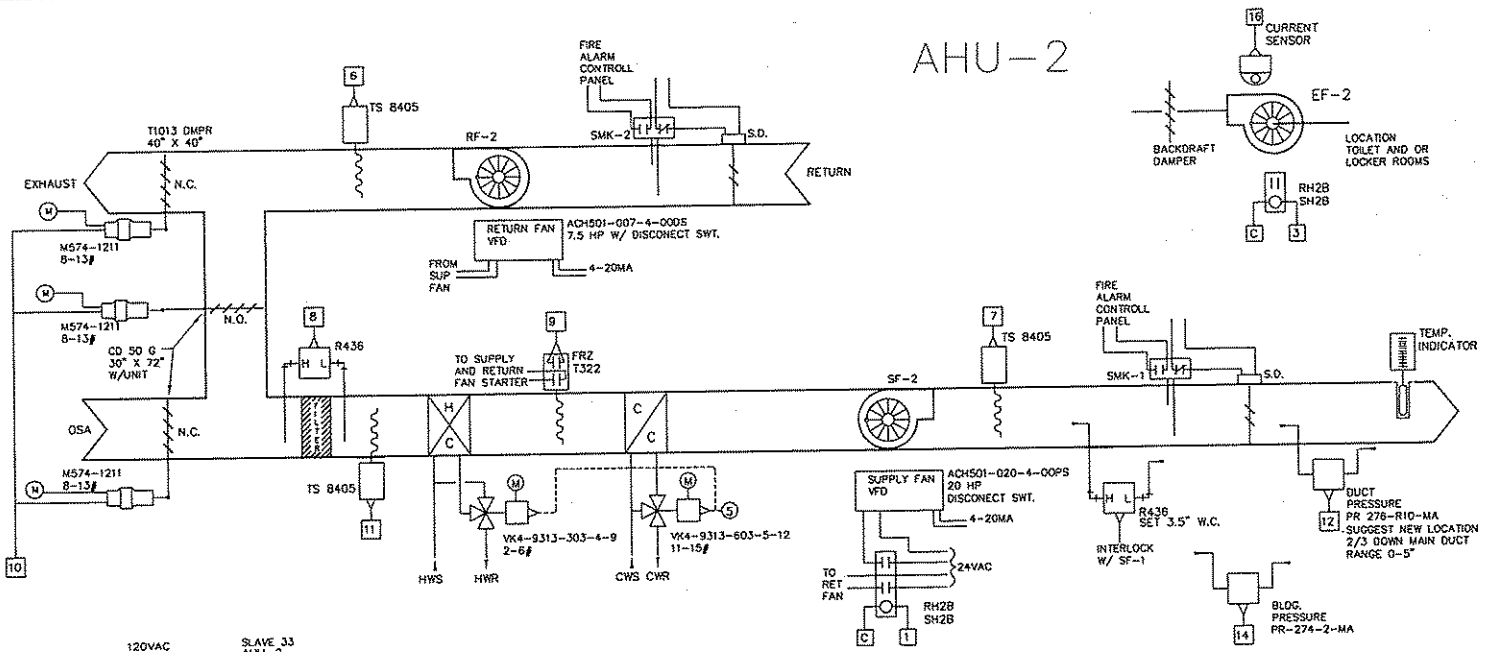

Sequence of operation AHU-2 / RF-2:

The Siebe automation control system will utilize optimal start, occupied and unoccupied modes of control.

Optimal start/warm-up mode: The Siebe automation system will calculate the outside air temp. and the space temperature to start the fan systems to bring the space temperatures up to occupied setpoint at the latest possible time.

During optimal start/warm-up the dampers will be positioned to full recirculation, variable frequency controlling to duct static pressure, the cooling valve in full bypass with the associated exhaust fans off and primary dampers of vav dampers open 100%.
Supply air shall be set at 80 deg.

Occupied mode: The supply and return fans will operate continuously with the dampers positioned to minimum outside air as set thru by balancing contractor. The heating valve, oso/return/relief dampers and cooling valve will modulate in sequence to maintain 60 degree supply air temperature. A call for heating will modulate the heating valve open with the dampers positioned to minimum. A call for cooling will modulate the dampers from minimum to 100% outside air, a further call for cooling will modulate the cooling valve open. The dampers will be positioned to minimum when the outside air temperature is greater than the return air temperature. Supply air temperature will be limited to 60 degrees.

Ventilation mode: The Siebe controller will position dampers to maintain 5500 cfm minimum outside air during the ventilation mode.

Supply air static pressure control: A duct static pressure sensor located 2/3 down the longest supply duct run will signal the Siebe controller. The supply fan variable frequency drive will be utilized to maintain 1.00" w.c. or as set.

Return fan control: The Siebe controller will utilize the variable frequency drive to maintain differential cfm between the supply and return. Differential cfm offset will be based on the total of non-recirculated exhaust air cfm and pressurization cfm. CFM offset will be established during air balance.

A freeze protection thermostat located on the discharge side of the heating coil will stop the supply and return fans if 40 degree discharge air is sensed. A alarm will be generated to the Siebe automation system. 2/4/99 - change M/UDP4 - stops AHU2 and EF2 if freeze stat in alarm.

A duct smoke detector thru the fire alarm system will shutdown the air handler upon detection of smsoke and the smoke isolation dampers will close.

A high duct static pressure switch will shutdown the air handler if duct discharge static pressure exceeds 3.5" w.c.

Exhaust fan 2: Exhaust fan will be on during occupied mode of AHU-2 and off during unocuupied mode of AHU-2.

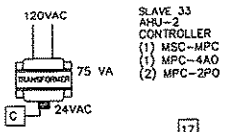

SLAVE 33
AHU-2
CONTROLLER
(1) MSC-MPC
(1) MPC-4AO
(2) MPC-2PO

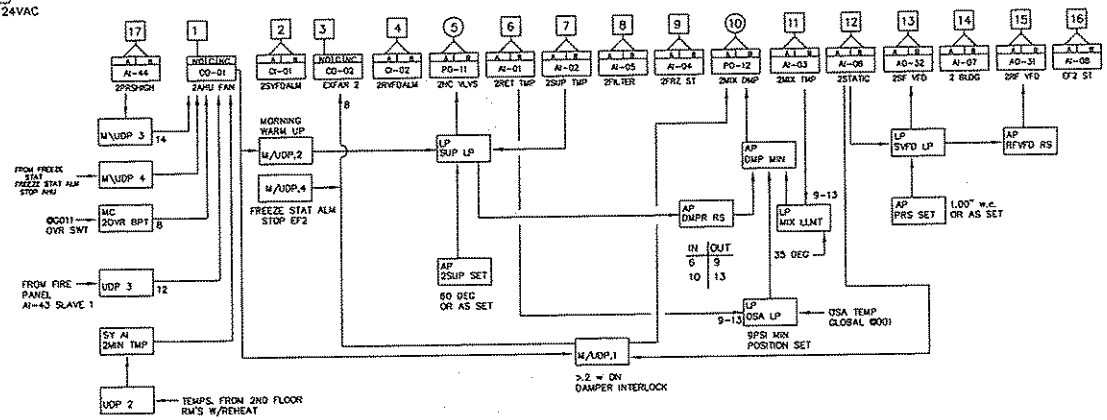

BLDG. 2005

REV No.	DESCRIPTION	REV DATE	APPROVALS
	RECORD DRAWING	10.31.96	

-REVISIONS-

SIEBE ENVIRONMENTAL CONTROLS

SIEBE ENVIRONMENTAL CONTROLS
3915 E. MAIN
SPOKANE, WA. 99202

DESCRIPTION
AHU-2 - BLDG. 2005

JOB NAME SQUAD OPS/AMU
LOCATION F.A.F.B. SPOKANE, WA.
ARCHITECT WJA PS
ENGINEER WOOD / HARBINGER INC.
CONTRACTOR RAMSETT MECHANICAL
ENGR'D BY R.RHODES
CHECKED BY D.DARLING
PROJECT NO. 965-95013-34
DRAWN BY D.A.S.

DRAWING NO. 95013-3.DWG
DATE 2.19.96 SHEET 3 OF 6

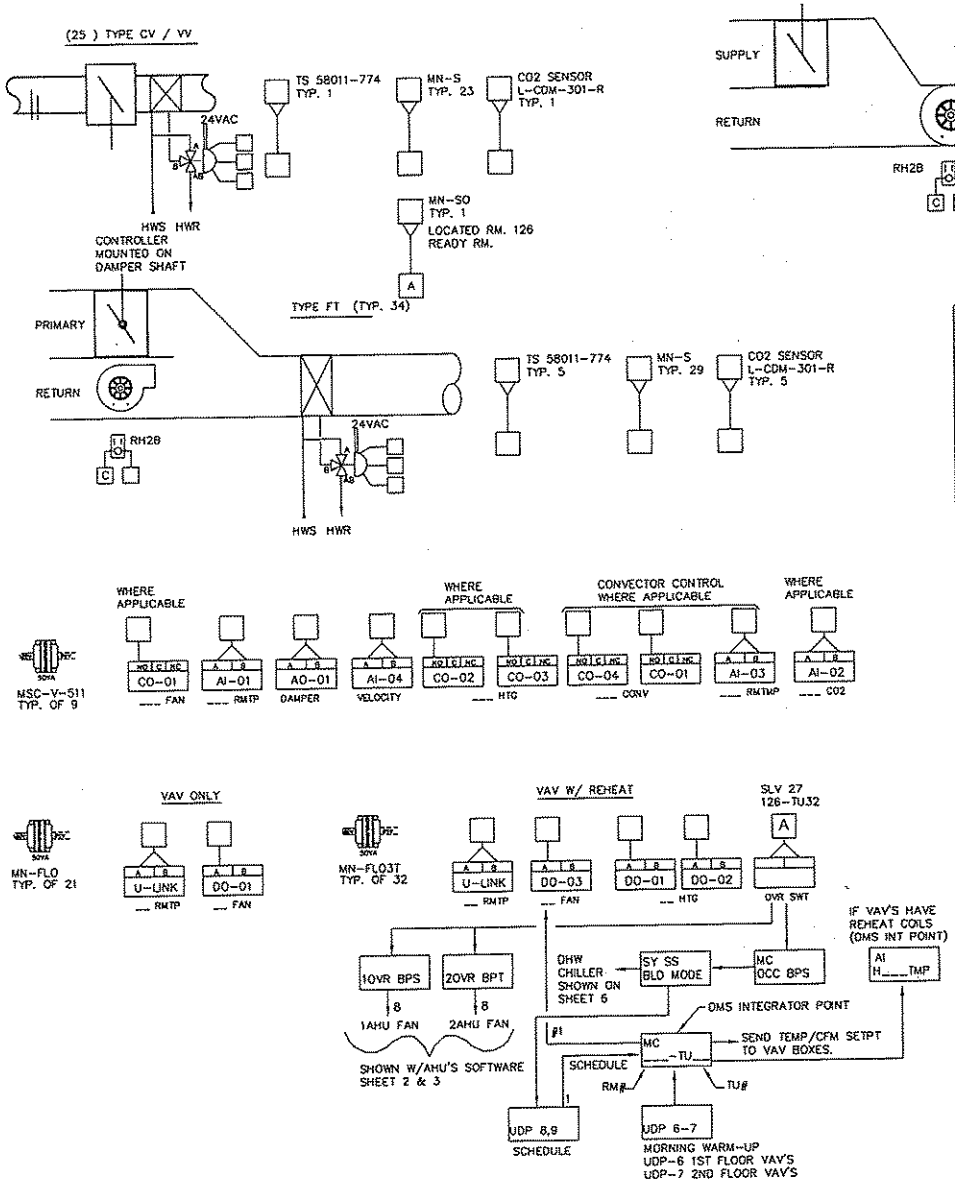

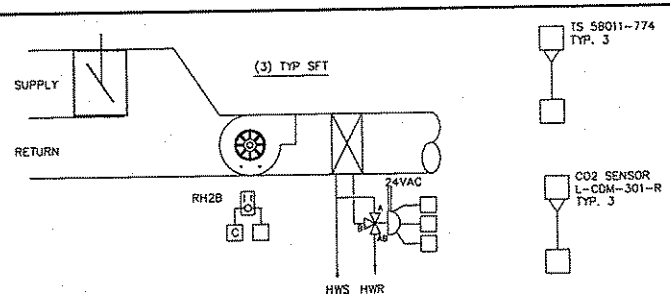

VAV VALVE AND CONTROLLER SCHEDULE

ROOM#	BOX	TYPE	VALVE	CONTROLLER	CO2 req'd	VALVE
113A	8"	FT	VF 9213-251-4-2	MN-FLO3T	NO	
113	8"	VV	NO	MN-FLO	NO	
112	12"	FT	VF 9313-251-4-4	MN-FLO3T	NO	3-WAY
115	6"	CV	VF 9213-251-4-2	MN-FLO3T	NO	
103	10"	VV	NO	MN-FLO	NO	
118	10"	SFT	VF 9213-251-4-3	MSC-V511	YES	
123A	6"	VV	NO	MN-FLO	NO	
123	6"	VV	NO	MN-FLO	NO	
123	6"	VV	NO	MN-FLO	NO	
125	8"	FT	VF 9213-251-4-2	MN-FLO3T	NO	
125B	6"	FT	VF 9213-251-4-2	MN-FLO3T	NO	
126	8"	VV	NO	MN-FLO	NO	
129	6"	VV	NO	MN-FLO	NO	
126C	6"	VV	NO	MN-FLO	NO	
127	6"	VV	VF 9213-251-4-2	MSC-V511	YES	
127A	6"	FT	VF 9213-251-4-2	MN-FLO3T	NO	
127C	6"	SFT	VF 9213-251-4-2	MN-FLO3T	NO	
127E	8"	FT	VF 9213-251-4-2	MN-FLO3T	NO	
128	10"	FT	VF 9213-251-4-3	MSC-V511	YES	
132	8"	FT	VF 9213-251-4-2	MN-FLO3T	NO	
130A	6"	CV	VF 9213-251-4-2	MN-FLO3T	NO	
131A	8"	CV	NO	MN-FLO	NO	
101	6"	VV	NO	MN-FLO	NO	
105	8"	FT	VF 9213-251-4-2	MN-FLO3T	NO	
106	8"	FT	VF 9213-251-4-2	MN-FLO3T	NO	
107	8"	FT	VF 9213-251-4-2	MSC-V511	YES	
108	6"	VV	VF 9213-251-4-2	MSC-V511	YES	
111	10"	FT	VF 9313-251-4-4	MN-FLO3T	NO	3-WAY
106A	6"	VV	NO	MN-FLO	NO	
102	8"	VV	NO	MN-FLO	NO	
120	6"	VV	NO	MN-FLO	NO	
104	6"	VV	NO	MN-FLO	NO	
ROOM#	**BOX**	**TYPE**	**VALVE**	**CONTROLLER**	**CO2 req'd**	**VALVE**
210A	8"	FT	VF 9313-251-4-2	MN-FLO3T	NO	3-WAY
210C	8"	FT	VF 9213-251-4-2	MN-FLO3T	NO	
210E	10"	VV	NO	MN-FLO	NO	
210	10"	FT	VF 9213-251-4-3	MN-FLO3T	NO	
212	8"	FT	VF 9213-251-4-2	MN-FLO3T	NO	
215	6"	VV	VF 9213-251-4-2	MN-FLO3T	NO	
216	10"	FT	VF 9213-251-4-3	MN-FLO3T	NO	
204	6"	CV	VF 9213-251-4-2	MN-FLO3T	NO	
221	10"	FT	VF 9213-251-4-2	MN-FLO3T	NO	
220	6"	CV	VF 9213-251-4-2	MN-FLO3T	NO	
218	6"	CV	VF 9213-251-4-2	MN-FLO3T	NO	
211	10"	VV	NO	MN-FLO	NO	
203	6"	VV	NO	MN-FLO	NO	
208	6"	VV	NO	MN-FLO	NO	
224F	8"	VV	NO	MN-FLO	NO	
205	6"	VV	NO	MN-FLO	NO	
223	8"	FT	VF 9213-251-4-2	MN-FLO3T	NO	
224E	8"	FT	VF 9213-251-4-2	MN-FLO3T	NO	
224B	6"	FT	VF 9213-251-4-2	MN-FLO3T	NO	
224D	8"	FT	VF 9213-251-4-2	MN-FLO3T	NO	
224	6"	VV	NO	MN-FLO	NO	
224A	6"	FT	VF 9213-251-4-2	MN-FLO3T	NO	
225	10"	VV	VF 9213-251-4-3	MN-FLO3T	NO	
206A	6"	FT	VF 9213-251-4-2	MN-FLO3T	NO	
206	12"	SFT	VF 9213-251-4-2	MSC-V511	YES	
206	12"	SFT	VF 9213-251-4-2	MSC-V511	YES	
206	12"	SFT	VF 9213-251-4-2	MSC-V511	YES	
209	10"	FT	VF 9213-251-4-3	MSC-V511	YES	
209A	8"	FT	VF 9213-251-4-2	MN-FLO3T	NO	
209B	6"	FT	VF 9313-251-4-2	MN-FLO3T	NO	3-WAY

Sequence of operation space temperature control:

VAV boxes: During the occupied mode the damper will modulate to maximum cfm on a call for cooling. On a drop in space temperature the damper will modulate to minimum cfm, a further drop in space temperature the heating control valve will open. Heating setpoint 68 degree, cooling setpoint 74 degrees.

Fan powered (series) boxes: During the worm-up / optimal start and occupied modes the fan will run continuously. The damper will modulate from minimum cfm to maximum cfm on a call for cooling to maintain cooling setpoint. On a drop in space temperature the damper will modulate to minimum cfm, a further drop in space temperature the heating control valve will open. Heating setpoint 68 degrees, cooling setpoint 75 degrees.
During the unoccupied mode the fan will start and the heating control valve will open when space temperature falls to 55 degrees. Unit will continue to operate in full heating until temperature rises to 60 degrees.

Fan powered (parallel) boxes: During the occupied mode the damper will modulate from minimum cfm to maximum cfm on a call for cooling to maintain cooling setpoint. On a drop in space temperature the damper will modulate to minimum cfm, a further drop in space temperature the fan will start and the heating control valve will open. Heating setpoint 68 degrees, cooling setpoint 75 degrees.
During the unoccupied mode the fan will start and the heating control valve will open when space temperature falls to 55 degrees. Unit will continue to operate in full heating until temperature rises to 60 degrees.

Terminal unit ventilation control (see control drawing for schedule): During the occupied mode the Siebe automation will monitor the co2 levels as indicated. Upon a rise in co2 level the damper will modulate open to maximum cfm per the following schedule:

Space co2 level (ppm)	Terminal unit damper
Below 700	Under space temp. control
1000	Maximum cfm

The damper will modulate linearally between the indicated co2 levels. The terminal unit will control to maintain 68 degree heating setpoint during co2 override.

BLDG. 2005 – VAV BOXES

RECORD DRAWING: 10.31.96

SIEBE ENVIRONMENTAL CONTROLS
SIEBE ENVIRONMENTAL CONTROLS
3915 E. MAIN
SPOKANE, WA. 99202

DESCRIPTION: VAV BOXES – BLDG. 2005

JOB NAME: SQUAD OPS/AMU
LOCATION: F.A.F.B. SPOKANE, WA.
ARCHITECT: WJA PS
ENGINEER: WOOD / HARBINGER INC.
CONTRACTOR: RAMSETT MECHANICAL
ENGR'D BY: R.RHODES
CHECKED BY: D.DARLING
PROJECT NO. 965-95013-34
DRAWN BY: D.A.S.
DRAWING NO. 95013-4.DWG
DATE 2.19.96 SHEET 4 OF 8

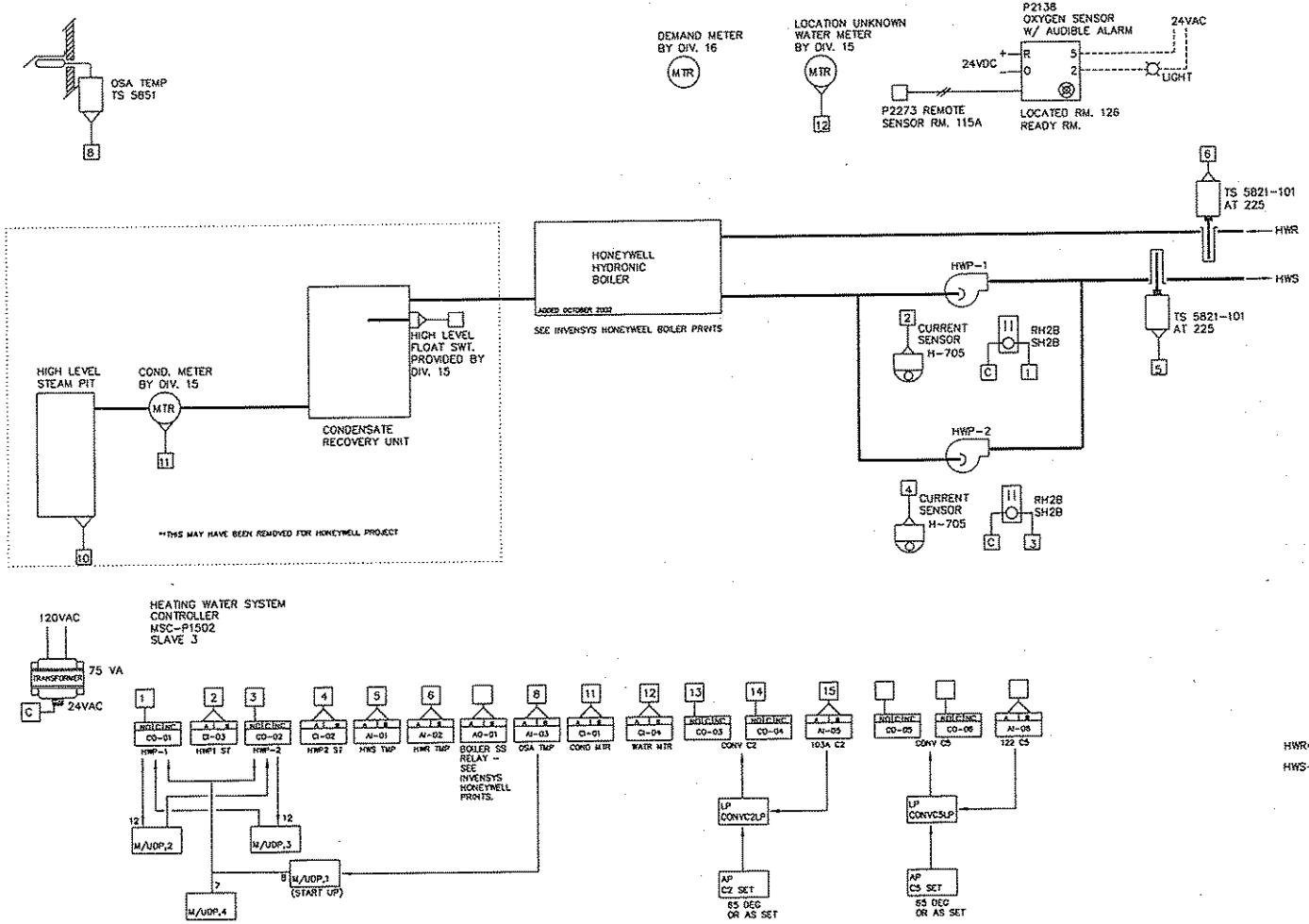

Sequence of operation Heating Water System:

Steam to HW convertor has been removed. A Honeywell hydronic boiler now provides the heating medium. See Invensys Honeywell ESPC prints for more info.

Hot water pumps shall have a minimum on time of 30 minutes. When hot water pumps status is off the steam valve shall be closed.

The Siebe automation system will energize the lead heating water pump below 65 degrees osa temperature. Upon failure of the lead heating pump the lag heating water pump will be energized after a delay (60 seconds) as programmed thru the Siebe system.

The lead heating water pump will be alternated weekly based on run-time.
Sequence of operation Convectors: Siebe will control the heating valve to maintain 65 degree occupied space temperature and 55 degree unoccupied space temperature.

Siebe will monitor the electrical demand meter.
Siebe will monitor the water meter.
Siebe will monitor the condensate meter

Siebe will monitor the oxygen level in Room 115A (oxygen bottle maintenance room). Upon high oxygen level, an audible and visual alarm (with silence switch) will activate in the ready room 126. An auxiliary visual alarm will be activated near the entrance to the oxygen bottle maintenance room.

CONVECTOR	LOCATION	TERMINATION CONTROLLER	SLAVE #
C-1	RM. 102A	MSC-V-511	7
C-2	RM. 103A	MSC-P1502	3
C-3	RM. 126A	MSC-V-511	10
C-4	RM. 101A	MSC-V-511	9
C-5	RM. 122	MSC-P1502	3

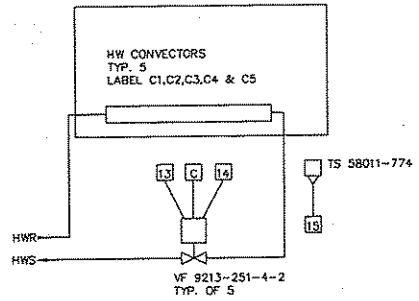

5/7/03 - REMOVED HW CONVERTOR/ADDED BOILER - M2

SIEBE ENVIRONMENTAL CONTROLS

SIEBE ENVIRONMENTAL CONTROLS
3915 E. MAIN
SPOKANE, WA. 99202

DESCRIPTION
STEAM AND HEATING WATER SYSTEM - BLDG. 2005

JOB NAME SQUAD OPS/AMU
LOCATION F.A.F.B. SPOKANE, WA.
ARCHITECT WJA PS
ENGINEER WOOD / HARBINGER INC.
CONTRACTOR RAMSETT MECHANICAL
ENGR'D BY R.RHODES
CHECKED BY D.DARLING
PROJECT NO. 965-95013-34
DRAWN BY D.A.S.

DRAWING NO. 95013-5.DWG
DATE 2.19.96 SHEET 5 OF 6

REV No.	DESCRIPTION	REV DATE	APPROVALS
	RECORD DRAWING	10.31.96	

-REVISIONS-

BLDG 2005

CHILLED WATER SYSTEM

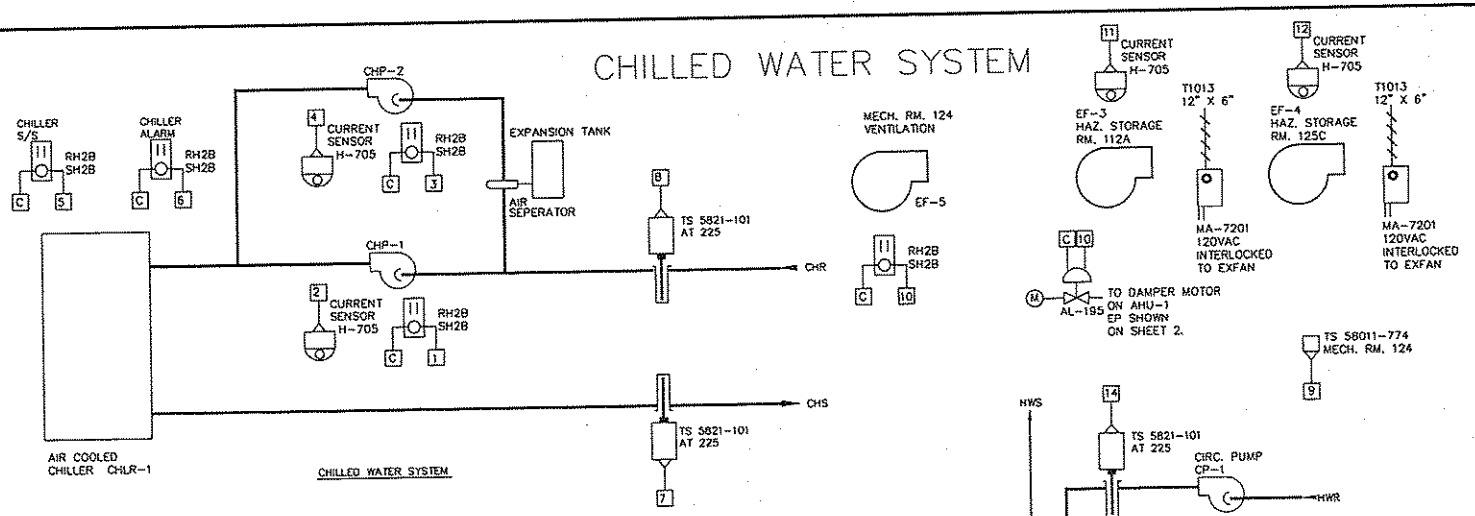

CHILLED WATER SYSTEM

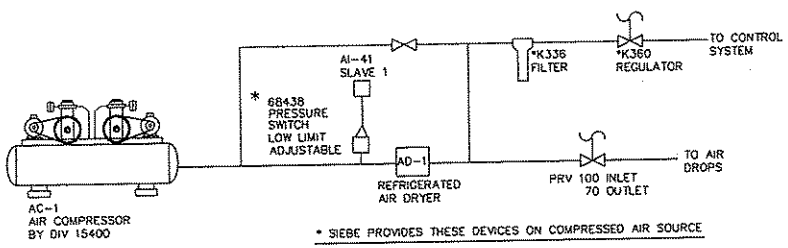

* SIEBE PROVIDES THESE DEVICES ON COMPRESSED AIR SOURCE

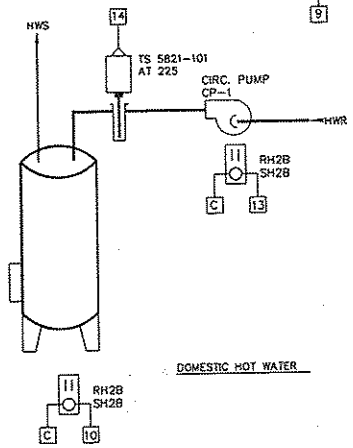

DOMESTIC HOT WATER

Sequence operation Chilled Water System:

The Siebe automation system will start the chilled water system when the outside air temperture is above 62 degrees and there is a demand for cooling from either of the air handling units, and bldg. is in occupied mode.
The automation system will stop the chilled water system when the outside air temperature is below 60 degrees or there is no cooling demand from either of the air handling units.Chilled water pump shall have a minimum on time of 30 minutes.

The Siebe controller will start the lead chilled water pump and upon proof of start up the chiller will be enabled. On proof of flow the chiller will operate upon its self contained controls to maintain chilled water setpoint. Upon lead pump failure the chiller will be disabled, the lag pump will be started and upon proof of start the chiller will be enabled.

The Siebe controller will disable the chiller and the chilled water pump will continue to operate for three (3) minutes (or as set).

The lead chilled water pump will be alternated weekly based on run-time.

Sequence of operation Mechanical room ventilation: A rise in space temperature to 85 degrees will start EF-5 and open the return air damper at AHU-1. Fan will continue to operate with damper open until temperature falls to 80 degrees.

Siebe will monitor the status of EF-3 and EF-4.

Siebe will monitor low air pressure for air compressor AC-1.

Siebe will provide scheduled start / stop for the Domestic hot water heater and circ. pump.
Siebe will monitor the domestic hot water re-circulation temperature.

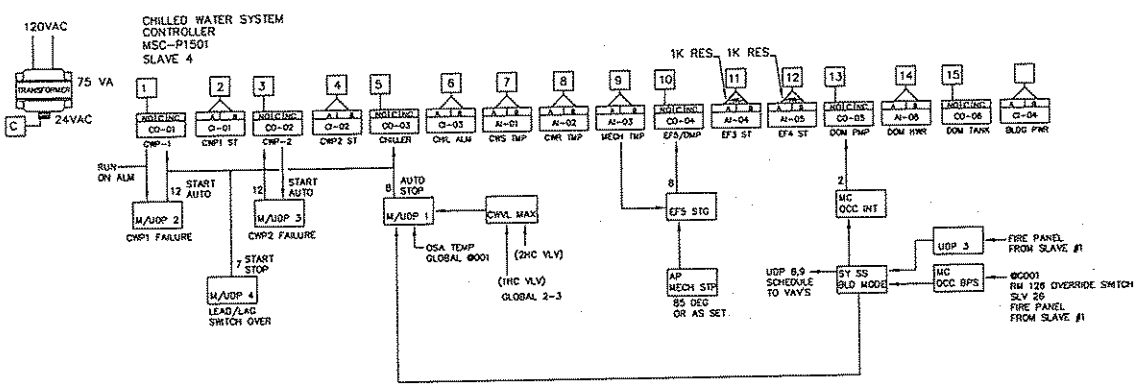

BLDG. 2005

REV No.	DESCRIPTION	REV DATE	APPROVALS
	RECORD DRAWING	10/31/96	

-REVISIONS-

SIEBE ENVIRONMENTAL CONTROLS

SIEBE ENVIRONMENTAL CONTROLS
3915 E. MAIN
SPOKANE, WA. 99202

DESCRIPTION
CHILLED WATER SYSTEM – BLDG. 2005

JOB NAME	SQUAD OPS/AMU
LOCATION	F.A.F.B. SPOKANE, WA.
ARCHITECT	WJA PS
ENGINEER	WOOD/HARBINGER INC.
CONTRACTOR	RAMSETT MECHANICAL
ENGR'D BY	R.RHODES
CHECKED BY	D.DARLING
PROJECT NO.	965-95013-34
DRAWN BY	D.A.S.

DRAWING NO. 95013-6.DWG
DATE 2.19.96 SHEET 6 OF 6

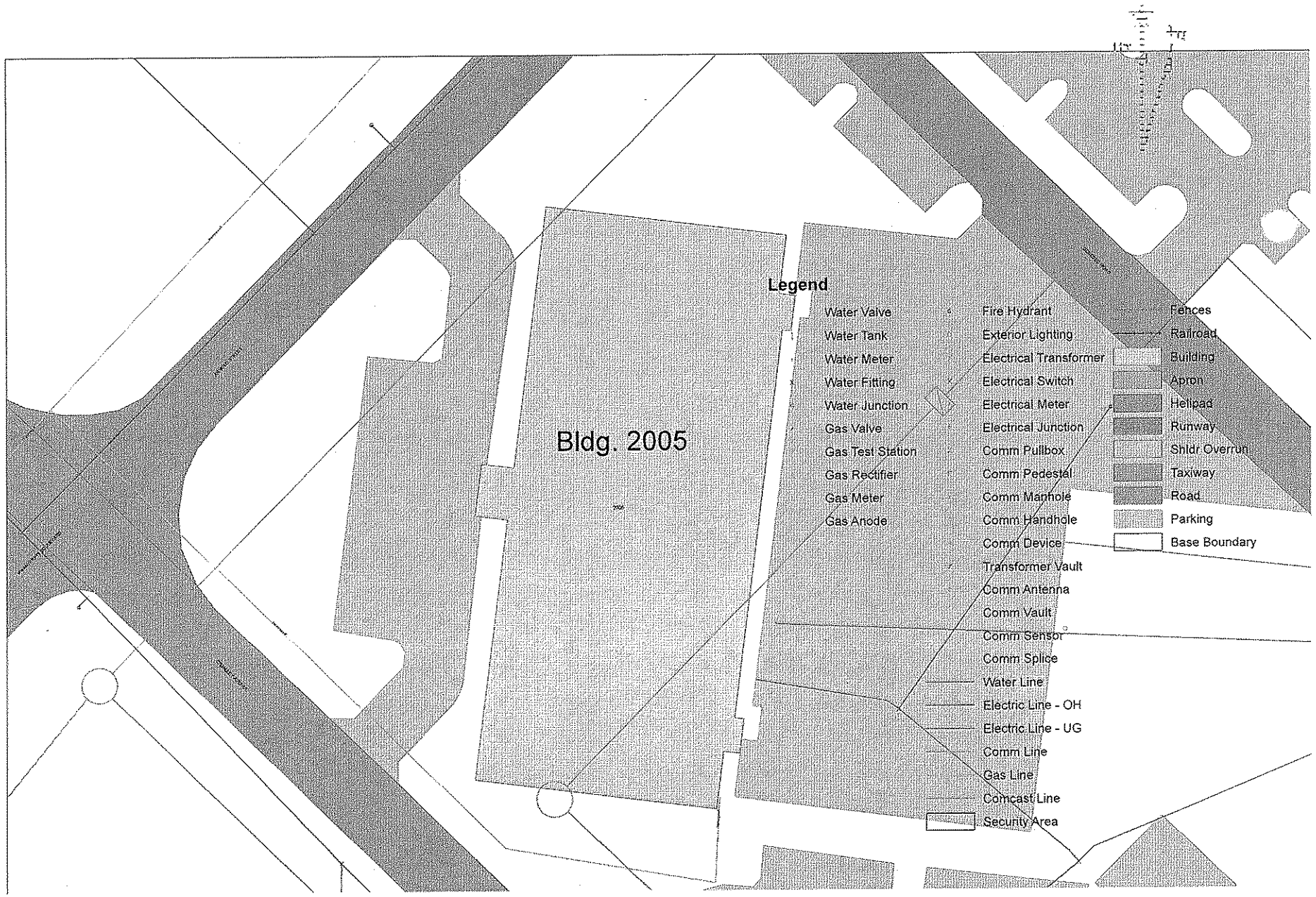
Bldg. 2005
Legend
Water Valve
Water Tank
Water Meter
Water Fitting
Water Junction
Gas Valve
Gas Test Station
Gas Rectifier
Gas Meter
Gas Anode
Fire Hydrant
Exterior Lighting
Electrical Transformer
Electrical Switch
Electrical Meter
Electrical Junction
Comm Pullbox
Comm Pedestal
Comm Manhole
Comm Handhole
Comm Device
Transformer Vault
Comm Antenna
Comm Vault
Comm Sensor
Comm Splice
Water Line
Electric Line - OH
Electric Line - UG
Comm Line
Gas Line
Comcast Line
Security Area
Fences
Railroad
Building
Apron
Helipad
Runway
Shldr Overrun
Taxiway
Road
Parking
Base Boundary