REG	STATE	PROJECT	SHEET NO.	TOTAL SHEETS
-	VA	VA-A-AD-48(1)	A1	335

U.S. DEPARTMENT OF TRANSPORTATION

FEDERAL HIGHWAY ADMINISTRATION

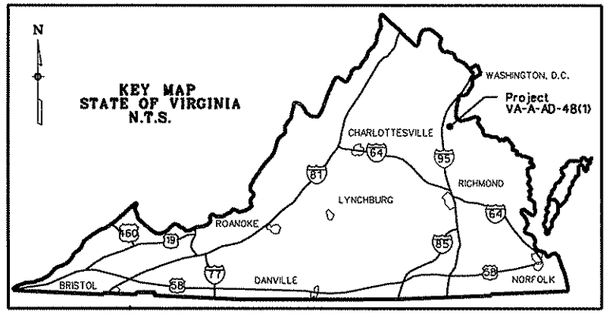

PLANS FOR PROPOSED

PROJECT VA-A-AD-48(1)

MULLIGAN ROAD

GRADING, DRAINAGE, AND AGGREGATE BASE FROM POLE ROAD TO TELEGRAPH ROAD, BRIDGES OVER KINGMAN ROAD AND PINEY RUN, AND OTHER WORK

FORT BELVOIR
FAIRFAX, VIRGINIA

INDEX TO SHEETS

SHEET NO	DESCRIPTION
A1	Title Sheet
A2	Conventional Symbols And Abbreviations
A3	Location And Keymap
A4-A5	Alignment Data
A6-A8	Survey Control
A9-A11	Range Clearing Limit Sheets
B1-B2	Typical Sections
C1-C14	Summary Sheets
D1-D14A	Plan And Profile Sheets - Mulligan Road
DM1	Settlement Monitoring Monuments
DS1-DS2	SWM Basin Access Road Profile
H1-H15	Drainage Profiles
H16-H18	Drainage Descriptions
HS01-HS06	SWM Basin Plans
MA-MB	E&S Control Narrative and Sequence of Construction
M1-M14B	Erosion And Sediment Control
N1-N3	Maintenance of Traffic
R1-R67	Bridge Plans
S1-S73	Details And Standard Drawings
UT1-UT10	Utility Plans
T1-T70	Mulligan Road Cross Sections

DESCRIPTION OF PROJECT

IMPROVEMENT: Grading, drainage and structures for new location roadway from Pole Road to Telegraph Road.

PROJECT LENGTH: 1.62 Miles

ROAD: MULLIGAN ROAD

	Mulligan Road
WIDTH	73'

	TYPE
SURFACE:	Future
INTERMEDIATE:	Future
BASE:	9" Aggregate Base Course, Grading C or D

BRIDGE:

Mulligan Road over Kingman Rd	47'-1"	Steel Girder	129'-10"
Mulligan Road over Piney Run	91'-0"	Steel Girder	200'-0"

DESIGN DESIGNATION:

	Mulligan Road (Projected)
ADT (2010)	20,300
ADT (2030)	40,390
DHV	4,039
D	40/60
%Truck	5%
V (MPH)	45
C/A	None
e(max)	4%
Roadway Classification	Urban Minor Arterial

SPECIFICATIONS:

"Standard Specifications for Construction of Roads and Bridges on Federal Highway Projects", FP-03 U.S.Customary Units.

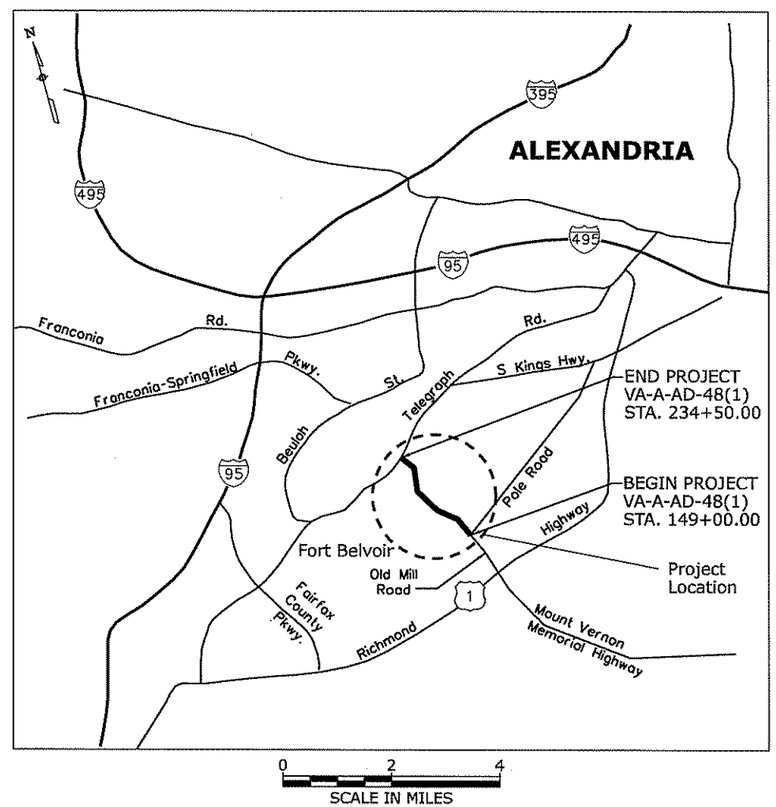

Call Miss Utility of Virginia prior to digging.
Phone #: (800) 552 - 7001
website: http://www.missutilityvirginia.com/

PLANS PREPARED FOR

U.S. Department of Transportation
Federal Highway Administration

EASTERN FEDERAL LANDS HIGHWAY DIVISION
STERLING, VIRGINIA

JUNE 2008

PLANS PREPARED BY

HDR ENGINEERING, INC.

PROJECT MANAGER	LEAD DESIGNER
M. DODSON	C. WALSH

6/30/2008 8:30:59 AM C:\PWworking\PITT\dms50565\A1.dgn

REG	STATE	PROJECT	SHEET NO.
-	VA	VA-A-AD-48(1)	A2

	EXISTING	PROPOSED
LIGHT POLE		
FIRE HYDRANT		
CULVERT with HEADWALL		
SEWER / STORM MANHOLE		M-1
GRATE INLET		I-3
UNDERGROUND UTILITIES G - gas; P - electric; O - oil; S - sanitary sewer; T - telephone; W - water; FO - fiber optic	W	W
SINGLE TREE		
DRAINAGE PIPE		
CURB INLET		
CULVERT with DROP INLET		
BUILDING		
COORDINATE GRID TICK		No Symbol
SPOT ELEVATION	x99.9	No Symbol
BORING LOCATION		No Symbol
SETTLEMENT MONITORING MONUMENT LOCATION		
SIGN SUPPORTS		
PORTABLE SIGN MOUNT	No Symbol	
POST MOUNTED (Single/Double)		
SIGNS (ROUTE MARKERS)		
INTERSTATE HIGHWAY	95	
U. S. ROUTE	64	
STATE HIGHWAY	143	
CONCRETE BOLLARDS		
SIGN		
DRAINAGE STRUCTURE NUMBER	189	8-12
VARIABLE MESSAGE BOARD		
RIGHT OF WAY		
TEMPORARY CONSTRUCTION EASEMENT		
PROPOSED PERMANENT EASEMENT		
SILT FENCE		
SUPER SILT FENCE		
DIVERSION DITCH		
DIVERSION DIKE		

	EXISTING	PROPOSED
FENCE		
CHAIN LINK, WIRE, OR WOOD (TEMPORARY OR PERMANENT)	x	x x
CONSTRUCTION FENCE		CF
INLET PROTECTION - TYPE A		IP DIST-A
INLET PROTECTION - TYPE B		IP DIST-B
CONSTRUCTION LIMITS		
TOP OF CUT		
TOE OF FILL		
TRANSITION		
REMOVAL OF PAVEMENT		
ROCK CHECK DAM		
RANGE CLEARING LIMITS		
LIMITS OF DISTURBANCE		

BLDG	Building
℄	Center Line
CMP	Corrugated Metal Pipe
Constr.	Construction
Conc.	Concrete
DET.	Detail
P	Electric
Elev.	Elevation
G	Gas
GTD	Grade-to-Drain
max.	Maximum
MH	Manhole
EMH	Electric Manhole
min.	Minimum
Mon.	Monument
No.	Number
CHCR	Concrete Handicap Ramp
EBL	East Bound Lane
WBL	West Bound Lane
NMSA	Nominal Maximum Size Aggregate

UD	Underdrain
ESAL	Equivalent Single Axle Load
O.C.	On Center
PCC	Portland Cement Concrete
POC	Point On Curve
POT	Point On Tangent
R	Radius
RCP	Reinforced Concrete Pipe
RECP	Rolled Erosion Control Product
S	Sewer
SACP	Superpave Asphalt Concrete Pavement
STD.	Standard
T	Telephone
TBM	Temporary Bench Mark
Traff.	Traffic
Typ.	Typical
VC	Vertical Curve
VDOT	Virginia Department of Transportation
W	Water
e	Superelevation Rate

U.S. DEPARTMENT OF TRANSPORTATION
FEDERAL HIGHWAY ADMINISTRATION
EASTERN FEDERAL LANDS HIGHWAY DIVISION
STERLING, VIRGINIA

FORT BELVOIR - MULLIGAN ROAD

CONVENTIONAL SYMBOLS AND ABBREVIATIONS

6/19/2008 7:15:07 PM C:\PWworking\PITT\dms60567\A2.dgn

REG	STATE	PROJECT	SHEET NO.
-	VA	VA-A-AD-48(1)	A3

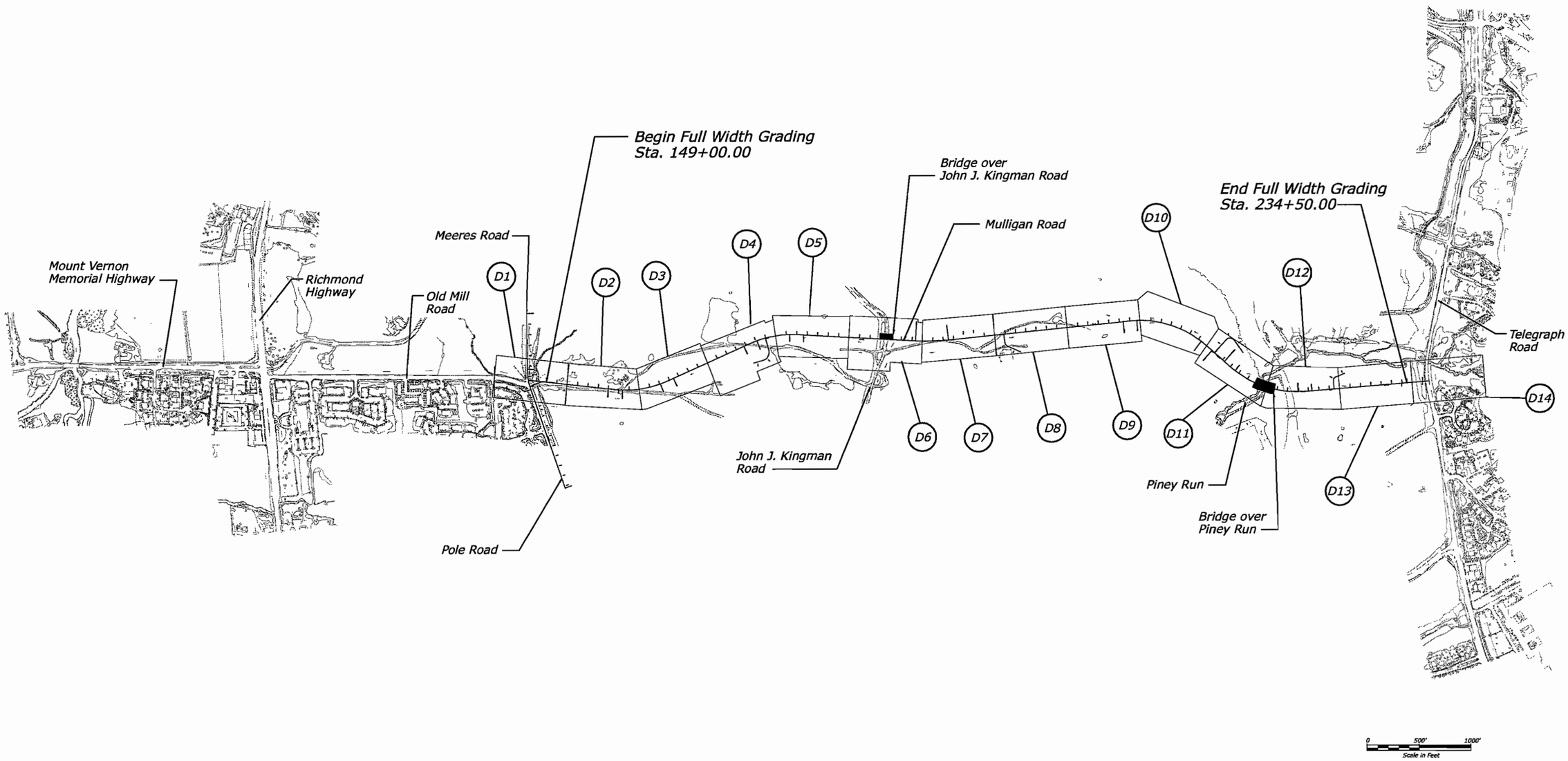

U.S. DEPARTMENT OF TRANSPORTATION
FEDERAL HIGHWAY ADMINISTRATION
EASTERN FEDERAL LANDS HIGHWAY DIVISION
STERLING, VIRGINIA

FORT BELVOIR - MULLIGAN ROAD

LOCATION AND KEY MAP

Sheet 1 of 1

5/20/2008 1:02:48 PM C:\PWworking\PITT\dms50567\01-RTC_keymap.dgn

REG	STATE	PROJECT	SHEET NO.
-	VA	VA-A-AD-48(1)	A4

MULLIGAN ROAD

Point CRBP10 N 6,945,481.5555 E 11,874,690.7063 Sta 100+00.00

Course from CRBP10 to PC CRBC1 N 26° 59' 05.83" W Dist 1,316.7581

Curve Data

Curve CRBC1
P.I. Station 113+89.02 N 6,946,719.3443 E 11,874,060.4308
Delta = 4° 08' 17.99" (RT)
Degree = 2° 51' 53.24"
Tangent = 72.2589
Length = 144.4550
Radius = 2,000.0000
External = 1.3049
Long Chord = 144.4236
Mid. Ord. = 1.3041
P.C. Station 113+16.76 N 6,946,654.9525 E 11,874,093.2187
P.T. Station 114+61.21 N 6,946,785.9343 E 11,874,032.3752
C.C. N 6,947,562.4655 E 11,875,875.4702
Back = N 26° 59' 05.83" W
Ahead = N 22° 50' 47.85" W
Chord Bear = N 24° 54' 56.84" W

Course from PT CRBC1 to PC CRBC2 N 22° 50' 47.85" W Dist 935.0147

Curve Data

Curve CRBC2
P.I. Station 124+75.22 N 6,947,720.3909 E 11,873,638.6707
Delta = 4° 31' 25.09" (LT)
Degree = 2° 51' 53.24"
Tangent = 78.9934
Length = 157.9047
Radius = 2,000.0000
External = 1.5594
Long Chord = 157.8637
Mid. Ord. = 1.5582
P.C. Station 123+96.23 N 6,947,647.5948 E 11,873,669.3411
P.T. Station 125+54.13 N 6,947,790.5413 E 11,873,602.3544
C.C. N 6,946,871.0635 E 11,871,826.2461
Back = N 22° 50' 47.85" W
Ahead = N 27° 22' 12.93" W
Chord Bear = N 25° 06' 30.39" W

Course from PT CRBC2 to PC CRBC3 N 27° 22' 12.93" W Dist 1,752.1809

Curve Data

Curve CRBC3
P.I. Station 143+69.57 N 6,949,402.7457 E 11,872,767.7284
Delta = 6° 02' 04.99" (RT)
Degree = 4° 46' 28.73"
Tangent = 63.2539
Length = 126.3908
Radius = 1,200.0000
External = 1.6660
Long Chord = 126.3324
Mid. Ord. = 1.6636
P.C. Station 143+06.31 N 6,949,346.5728 E 11,872,796.8087
P.T. Station 144+32.70 N 6,949,461.6645 E 11,872,744.7148
C.C. N 6,949,898.2595 E 11,873,862.4737
Back = N 27° 22' 12.93" W
Ahead = N 21° 20' 07.95" W
Chord Bear = N 24° 21' 10.44" W

Course from PT CRBC3 to TS CRBSC4B N 21° 20' 07.95" W Dist 1,070.8972

Beginning SCS CRBSC4 description

Spiral Back
Spiral CRBSC4B Type 1 Spiral Element

Angle 4° 04' 15.66" (LT) P 0.7992 BK N 21° 20' 07.95" W
LS 135.0000 K 67.4886 AH N 25° 24' 23.61" W
R 950.0000 LT 90.0238 Defl 1° 21' 25.01"
YS 3.1962 ST 45.0216 Deg 6° 01' 52.08"
XS 134.9319 LC 134.9697

Spiral Coordinates

Point	North	East	Station
TS	6,950,459.1685	11,872,355.0912	155+03.60
PI	6,950,543.0226	11,872,322.3380	155+93.63
SC	6,950,583.6901	11,872,303.0219	156+38.60
CC	6,950,176.1035	11,871,444.9001	

Circular Section

Curve Data

Curve CRBSC4
P.I. Station 158+26.78 N 6,950,753.6696 E 11,872,222.2859
Delta = 22° 24' 30.93" (LT)
Degree = 6° 01' 52.08"
Tangent = 188.1791
Length = 371.5485
Radius = 950.0000
External = 18.4582
Long Chord = 369.1850
Mid. Ord. = 18.1064
P.C. Station 156+38.60 N 6,950,583.6901 E 11,872,303.0219
P.T. Station 160+10.15 N 6,950,880.0365 E 11,872,082.8485
C.C. N 6,950,176.1035 E 11,871,444.9001
Back = N 25° 24' 23.61" W
Ahead = N 47° 48' 54.53" W
Chord Bear = N 36° 36' 39.07" W

Spiral Ahead
Spiral CRBSC4A Type 2 Spiral Element

Angle 4° 04' 15.66" (LT) P 0.7992 BK N 47° 48' 54.53" W
LS 135.0000 K 67.4886 AH N 51° 53' 10.19" W
R 950.0000 LT 90.0238 Defl 1° 21' 25.01"
YS 3.1962 ST 45.0216 Deg 6° 01' 52.08"
XS 134.9319 LC 134.9697

Spiral Coordinates

Point	North	East	Station
CS	6,950,880.0365	11,872,082.8485	160+10.15
PI	6,950,910.2697	11,872,049.4883	160+55.17
ST	6,950,965.8347	11,871,978.6588	161+45.15
CC	6,950,176.1035	11,871,444.9001	

Ending SCS CRBSC4 description

Course from ST CRBSC4A to TS CRBSC5B N 51° 53' 10.19" W Dist 734.9332

PISCS CRBSC5 N 6,951,604.1328 E 11,871,165.0118 STA 171+79.29
Total Tangent = 299.2070
Total Length = 589.1932
Total Delta = 27° 23' 34.80" (RT)
Back Tangent = N 51° 53' 10.19" W
Ahead Tangent = N 24° 29' 35.39" W

Beginning SCS CRBSC5 description

Spiral Back
Spiral CRBSC5B Type 1 Spiral Element

Angle 4° 04' 15.66" (RT) P 0.7992 BK N 51° 53' 10.19" W
LS 135.0000 K 67.4886 AH N 47° 48' 54.53" W
R 950.0000 LT 90.0238 Defl 1° 21' 25.01"
YS 3.1962 ST 45.0216 Deg 6° 01' 52.08"
XS 134.9319 LC 134.9697

Spiral Coordinates

Point	North	East	Station
TS	6,951,419.4545	11,871,400.4237	168+80.08
PI	6,951,475.0195	11,871,329.5942	169+70.11
SC	6,951,505.2527	11,871,296.2340	170+15.08
CC	6,952,209.1857	11,871,934.1824	

Circular Section

Curve Data

Curve CRBSC5
P.I. Station 171+76.20 N 6,951,613.4455 E 11,871,176.8505
Delta = 19° 15' 03.49" (RT)
Degree = 6° 01' 52.08"
Tangent = 161.1151
Length = 319.1932
Radius = 950.0000
External = 13.5653
Long Chord = 317.6939
Mid. Ord. = 13.3743
P.C. Station 170+15.08 N 6,951,505.2527 E 11,871,296.2340
P.T. Station 173+34.28 N 6,951,754.9500 E 11,871,099.8144
C.C. N 6,952,209.1857 E 11,871,934.1824
Back = N 47° 48' 54.53" W
Ahead = N 28° 33' 51.04" W
Chord Bear = N 38° 11' 22.79" W

Spiral Ahead
Spiral CRBSC5A Type 2 Spiral Element

Angle 4° 04' 15.66" (RT) P 0.7992 BK N 28° 33' 51.04" W
LS 135.0000 K 67.4886 AH N 24° 29' 35.39" W
R 950.0000 LT 90.0238 Defl 1° 21' 25.01"
YS 3.1962 ST 45.0216 Deg 6° 01' 52.08"
XS 134.9319 LC 134.9697

Spiral Coordinates

Point	North	East	Station
CS	6,951,754.9500	11,871,099.8144	173+34.28
PI	6,951,794.4917	11,871,078.2877	173+79.30
ST	6,951,876.4144	11,871,040.9652	174+69.28
CC	6,952,209.1857	11,871,934.1824	

Ending SCS CRBSC5 description

Course from ST CRBSC5A to PC CRBC6 N 24° 29' 35.39" W Dist 1,067.1092

Curve Data

Curve CRBC6
P.I. Station 186+94.77 N 6,952,991.6281 E 11,870,532.8937
Delta = 9° 03' 21.41" (LT)
Degree = 2° 51' 53.24"
Tangent = 158.3860
Length = 316.1122
Radius = 2,000.0000
External = 6.2617
Long Chord = 315.7832
Mid. Ord. = 6.2422
P.C. Station 185+36.39 N 6,952,847.4952 E 11,870,598.5581
P.T. Station 188+52.50 N 6,953,123.6289 E 11,870,445.3615
C.C. N 6,952,018.3259 E 11,868,778.5366
Back = N 24° 29' 35.39" W
Ahead = N 33° 32' 56.80" W
Chord Bear = N 29° 01' 16.09" W

Course from PT CRBC6 to TS CRBSC7B N 33° 32' 56.80" W Dist 1,686.540

PISCS CRBSC7 N 6,954,937.8040 E 11,869,242.3477 STA 210+29.30
Total Tangent = 490.2627
Total Length = 929.9544
Total Delta = 47° 56' 41.17" (RT)
Back Tangent = N 33° 32' 56.80" W
Ahead Tangent = N 14° 23' 44.38" E

Beginning SCS CRBSC7 description

Spiral Back
Spiral CRBSC7B Type 1 Spiral Element

Angle 4° 04' 15.66" (RT) P 0.7992 BK N 33° 32' 56.80" W
LS 135.0000 K 67.4886 AH N 29° 28' 41.14" W
R 950.0000 LT 90.0238 Defl 1° 21' 25.01"
YS 3.1962 ST 45.0216 Deg 6° 01' 52.08"
XS 134.9319 LC 134.9697

Spiral Coordinates

Point	North	East	Station
TS	6,954,529.2129	11,869,513.2922	205+39.04
PI	6,954,604.2399	11,869,463.5404	206+29.06
SC	6,954,643.4332	11,869,441.3856	206+74.04
CC	6,955,110.9194	11,870,268.4023	

Circular Section

Curve Data

Curve CRBSC7
P.I. Station 210+17.96 N 6,954,942.8314 E 11,869,272.1453
Delta = 39° 48' 09.86" (RT)
Degree = 6° 01' 52.08"
Tangent = 343.9209
Length = 659.9544
Radius = 950.0000
External = 60.3374
Long Chord = 646.7638
Mid. Ord. = 56.7340
P.C. Station 206+74.04 N 6,954,643.4332 E 11,869,441.3856
P.T. Station 213+33.99 N 6,955,281.1836 E 11,869,333.7847
C.C. N 6,955,110.9194 E 11,870,268.4023
Back = N 29° 28' 41.14" W
Ahead = N 10° 19' 28.72" E
Chord Bear = N 9° 34' 36.21" W

Spiral Ahead
Spiral CRBSC7A Type 2 Spiral Element

Angle 4° 04' 15.66" (RT) P 0.7992 BK N 10° 19' 28.72" E
LS 135.0000 K 67.4886 AH N 14° 23' 44.38" E
R 950.0000 LT 90.0238 Defl 1° 21' 25.01"
YS 3.1962 ST 45.0216 Deg 6° 01' 52.08"
XS 134.9319 LC 134.9697

Spiral Coordinates

Point	North	East	Station
CS	6,955,281.1836	11,869,333.7847	213+33.99
PI	6,955,325.4762	11,869,341.8537	213+79.01
ST	6,955,412.6735	11,869,364.2351	214+68.99
CC	6,955,110.9194	11,870,268.4023	

Ending SCS CRBSC7 description description continues on next sheet

U.S. DEPARTMENT OF TRANSPORTATION
FEDERAL HIGHWAY ADMINISTRATION
EASTERN FEDERAL LANDS HIGHWAY DIVISION
STERLING, VIRGINIA

FORT BELVOIR - MULLIGAN ROAD

ALIGNMENT DATA

5/20/2008 9:57:30 AM C:\PWworking\PITT\dms60567\01-RTC_alignl.dgn

REG	STATE	PROJECT	SHEET NO.
-	VA	VA-A-AD-48(1)	A5

MULLIGAN ROAD (CONTINUED)

SCS CRBSC8 found within chain CONNB, contains:
SPI CRBSC8B CUR CRBSC8 SPI CRBSC8A

PISCS CRBSC8 N 6,956,028.3801 E 11,869,522.2720 STA 221+04.66
Total Tangent = 478.4150
Total Length = 910.0959
Total Delta = 46° 44' 49.48" (LT)
Back Tangent = N 14° 23' 44.38" E
Ahead Tangent = N 32° 21' 05.10" W

Beginning SCS CRBSC8 description

Spiral Back
Spiral CRBSC8B Type 1 Spiral Element

Angle 4° 04' 15.66" (LT) P 0.7992 BK N 14° 23' 44.38" E
LS 135.0000 K 67.4886 AH N 10° 19' 28.72" E
R 950.0000 LT 90.0238 Defl 1° 21' 25.01"
YS 3.1962 ST 45.0216 Deg 6° 01' 52.08"
XS 134.9319 LC 134.9697

Spiral Coordinates

Point	North	East	Station
TS	6,955,564.9864	11,869,403.3301	216+26.24
PI	6,955,652.1837	11,869,425.7115	217+16.27
SC	6,955,696.4763	11,869,433.7806	217+61.24
CC	6,955,866.7404	11,868,499.1629	

Circular Section

Curve Data

Curve CRBSC8
P.I. Station 220+93.98 N 6,956,023.8210 E 11,869,493.4146
Delta = 38° 36' 18.16" (LT)
Degree = 6° 01' 52.08"
Tangent = 332.7322
Length = 640.0959
Radius = 950.0000
External = 56.5837
Long Chord = 628.0563
Mid. Ord. = 53.4029
P.C. Station 217+61.24 N 6,955,696.4763 E 11,869,433.7806
P.T. Station 224+01.34 N 6,956,316.8381 E 11,869,335.7704
C.C. N 6,955,866.7404 E 11,868,499.1629
Back = N 10° 19' 28.72" E
Ahead = N 28° 16' 49.44" W
Chord Bear = N 8° 58' 40.36" W

Spiral Ahead
Spiral CRBSC8A Type 2 Spiral Element

Angle 4° 04' 15.66" (LT) P 0.7992 BK N 28° 16' 49.44" W
LS 135.0000 K 67.4886 AH N 32° 21' 05.10" W
R 950.0000 LT 90.0238 Defl 1° 21' 25.01"
YS 3.1962 ST 45.0216 Deg 6° 01' 52.08"
XS 134.9319 LC 134.9697

Spiral Coordinates

Point	North	East	Station
CS	6,956,316.8381	11,869,335.7704	224+01.34
PI	6,956,356.4859	11,869,314.4398	224+46.36
ST	6,956,432.5364	11,869,266.2671	225+36.34
CC	6,955,866.7404	11,868,499.1629	

Ending SCS CRBSC8 description

Course from ST CRBSC8A to CRBP19 N 32° 21' 05.10" W Dist 1,441.9147

Point CRBP19 N 6,957,650.6400 E 11,868,494.6831 Sta 239+78.25

SWM BASIN #2

Point SBBP10 N 6,951,565.0109 E 11,871,235.9426 Sta 10+00.00

Course from SBBP10 to PC SBBC10 N 47° 18' 22.79" E Dist 123.8425

Curve Data

Curve SBBC10
P.I. Station 11+98.46 N 6,951,699.5815 E 11,871,381.8077
Delta = 89° 42' 22.03" (RT)
Degree = 76° 23' 39.74"
Tangent = 74.6163
Length = 117.4250
Radius = 75.0000
External = 30.7950
Long Chord = 105.7937
Mid. Ord. = 21.8312
P.C. Station 11+23.84 N 6,951,648.9858 E 11,871,326.9655
P.T. Station 12+41.27 N 6,951,644.9995 E 11,871,432.6840
C.C. N 6,951,593.8616 E 11,871,377.8214
Back = N 47° 18' 22.79" E
Ahead = S 42° 59' 15.18" E
Chord Bear = S 87° 50' 26.19" E

Course from PT SBBC10 to SBBP12 S 42° 59' 15.18" E Dist 96.3740

Point SBBP12 N 6,951,574.5018 E 11,871,498.3956 Sta 13+37.64

SWM BASIN #6

Point SBFP10 N 6,953,571.5901 E 11,870,148.3099 Sta 10+00.00

Course from SBFP10 to PC SBFC10 N 56° 27' 03.18" E Dist 78.1537

Curve Data

Curve SBFC10
P.I. Station 11+07.59 N 6,953,631.0490 E 11,870,237.9754
Delta = 60° 58' 12.42" (LT)
Degree = 114° 35' 29.61"
Tangent = 29.4347
Length = 53.2065
Radius = 50.0000
External = 8.0207
Long Chord = 50.7314
Mid. Ord. = 6.9119
P.C. Station 10+78.15 N 6,953,614.7819 E 11,870,213.4442
P.T. Station 11+31.36 N 6,953,660.3922 E 11,870,235.6561
C.C. N 6,953,656.4525 E 11,870,185.8116
Back = N 56° 27' 03.18" E
Ahead = N 4° 31' 09.23" W
Chord Bear = N 25° 57' 56.98" E

Course from PT SBFC10 to SBFP12 N 4° 31' 09.23" W Dist 135.3107

Point SBFP12 N 6,953,795.2822 E 11,870,224.9945 Sta 12+66.67

SWM BASIN #7

Point SBGP10 N 6,955,442.7072 E 11,869,371.9441 Sta 10+00.00

Course from SBGP10 to PC SBGC10 N 75° 36' 15.58" W Dist 165.3384

Curve Data

Curve SBGC10
P.I. Station 12+28.62 N 6,955,499.5465 E 11,869,150.5002
Delta = 103° 22' 33.88" (RT)
Degree = 114° 35' 29.61"
Tangent = 63.2838
Length = 90.2126
Radius = 50.0000
External = 30.6526
Long Chord = 78.4647
Mid. Ord. = 19.0029
P.C. Station 11+65.34 N 6,955,483.8131 E 11,869,211.7970
P.T. Station 12+55.55 N 6,955,555.5407 E 11,869,179.9873
C.C. N 6,955,532.2432 E 11,869,224.2279
Back = N 75° 36' 15.58" W
Ahead = N 27° 46' 18.30" E
Chord Bear = N 23° 54' 58.64" W

Course from PT SBGC10 to SBGP12 N 27° 46' 18.30" E Dist 143.3566

Point SBGP12 N 6,955,682.3842 E 11,869,246.7844 Sta 13+98.91

SWM BASIN #9

Point SBIP10 N 6,956,613.067 E 11,869,151.914 Sta 10+00.00

Course from SBIP10 to PC SBIC10 S 57° 38' 54.92" W Dist 76.905

Curve Data

Curve SBIC10
P.I. Station 11+06.42 N 6,956,556.120 E 11,869,062.012
Delta = 72° 50' 39.24" (RT)
Degree = 143° 14' 22.02"
Tangent = 29.514
Length = 50.855
Radius = 40.000
External = 9.710
Long Chord = 47.498
Mid. Ord. = 7.813
P.C. Station 10+76.91 N 6,956,571.914 E 11,869,086.945
P.T. Station 11+27.76 N 6,956,575.285 E 11,869,039.567
C.C. N 6,956,605.705 E 11,869,065.541
Back = S 57° 38' 54.92" W
Ahead = N 49° 30' 25.84" W
Chord Bear = N 85° 55' 45.46" W

Course from PT SBIC10 to SBIP12 N 49° 30' 25.84" W Dist 89.172

Point SBIP12 N 6,956,633.190 E 11,868,971.752 Sta 12+16.93

STREAM REALIGNMENT @ PINEY RUN

Point PST21 N 6,955,872.130 E 11,869,320.300 Sta 10+00.00

Course from PST21 to PC ST21 N 48° 39' 29.09" E Dist 05.39

Curve Data

Curve ST21
P.I. Station 10+11.75 N 6,955,879.890 E 11,869,329.120
Delta = 35° 15' 24.70" (LT)
Degree = 286° 28' 44.03"
Tangent = 6.355
Length = 12.307
Radius = 20.000
External = 0.985
Long Chord = 12.114
Mid. Ord. = 0.939
P.C. Station 10+05.39 N 6,955,875.692 E 11,869,324.349
P.T. Station 10+17.70 N 6,955,886.072 E 11,869,330.593
C.C. N 6,955,890.708 E 11,869,311.138
Back = N 48° 39' 29.09" E
Ahead = N 13° 24' 04.39" E
Chord Bear = N 31° 01' 46.74" E

Course from PT ST21 to PC ST22 N 13° 24' 04.39" E Dist 44.79

Curve Data

Curve ST22
P.I. Station 10+75.25 N 6,955,942.050 E 11,869,343.930
Delta = 46° 04' 18.31" (RT)
Degree = 190° 59' 09.35"
Tangent = 12.756
Length = 24.123
Radius = 30.000
External = 2.599
Long Chord = 23.478
Mid. Ord. = 2.392
P.C. Station 10+62.49 N 6,955,929.641 E 11,869,340.973
P.T. Station 10+86.61 N 6,955,948.530 E 11,869,354.918
C.C. N 6,955,922.688 E 11,869,370.157
Back = N 13° 24' 04.39" E
Ahead = N 59° 28' 22.70" E
Chord Bear = N 36° 26' 13.55" E

Course from PT ST22 to PST24 N 59° 28' 22.70" E Dist 06.14

Point PST24 N 6,955,951.650 E 11,869,360.210 Sta 10+92.75

U.S. DEPARTMENT OF TRANSPORTATION
FEDERAL HIGHWAY ADMINISTRATION
EASTERN FEDERAL LANDS HIGHWAY DIVISION
STERLING, VIRGINIA

FORT BELVOIR - MULLIGAN ROAD

ALIGNMENT DATA

5/20/2008 10:00:21 AM C:\PWworking\PITT\dms50567\0i-RTC_align2.dgn

REG	STATE	PROJECT	SHEET NO.
-	VA	VA-A-AD-48(1)	A6

TRAVERSE POINT # 243
REBAR & CAP SET

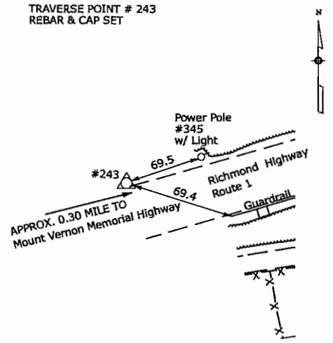

LAT: 38° 42' 54.23686"
LONG: 77° 08' 16.46974"

TRAVERSE POINT # 244
REBAR & CAP SET

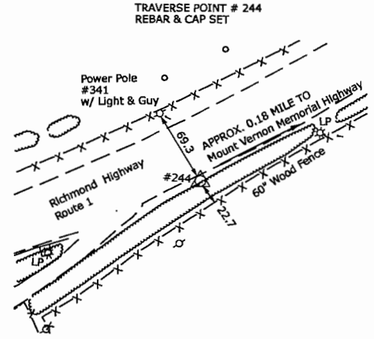

LAT: 38° 42' 55.69116"
LONG: 77° 08' 08.24771"

TRAVERSE POINT # 245
REBAR & CAP SET

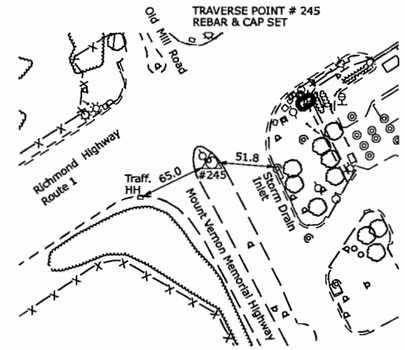

LAT: 38° 43' 00.20242"
LONG: 77° 07' 57.88479"

TRAVERSE POINT # 201
REBAR & CAP SET

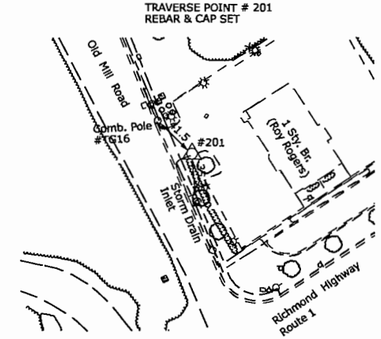

LAT: 38° 43' 03.05092"
LONG: 77° 07' 57.87044"

TRAVERSE POINT # 202
REBAR & CAP SET

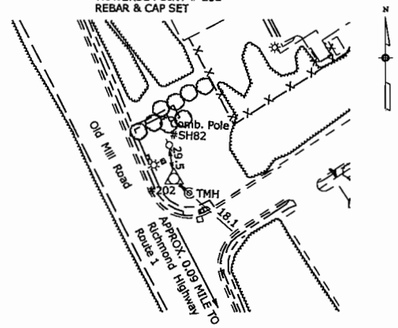

LAT: 38° 43' 05.63284"
LONG: 77° 07' 59.49395"

TRAVERSE POINT # 204
REBAR & CAP SET

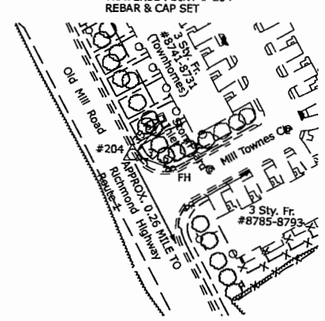

LAT: 38° 43' 13.53251"
LONG: 77° 08' 04.81254"

TRAVERSE POINT # 205
REBAR & CAP SET

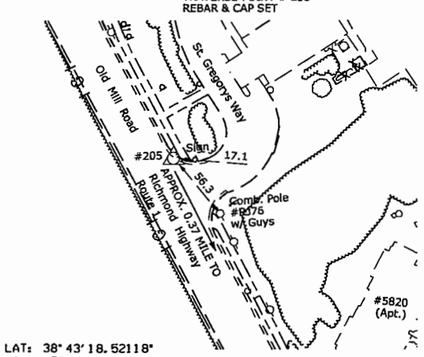

LAT: 38° 43' 18.52118"
LONG: 77° 08' 07.96239"

TRAVERSE POINT # 206
REBAR & CAP SET

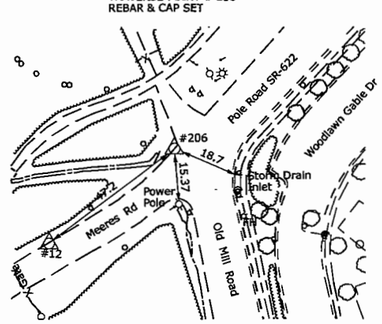

LAT: 38° 43' 23.94868"
LONG: 77° 08' 10.88356"

TRAVERSE POINT # 209
REBAR & CAP SET

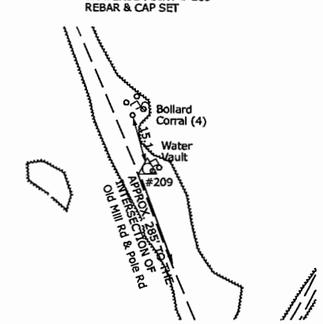

LAT: 38° 43' 26.50035"
LONG: 77° 08' 11.89101"

TRAVERSE POINT # 210
REBAR & CAP SET

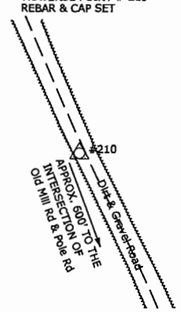

LAT: 38° 43' 29.33327"
LONG: 77° 08' 13.63272"

TRAVERSE POINT # 211
REBAR & CAP SET

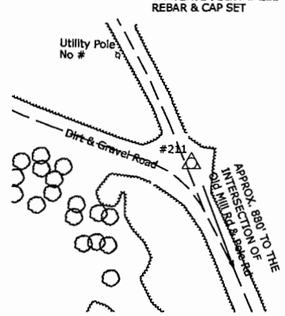

LAT: 38° 43' 31.92420"
LONG: 77° 08' 14.90788"

TRAVERSE POINT # 214
REBAR & CAP SET

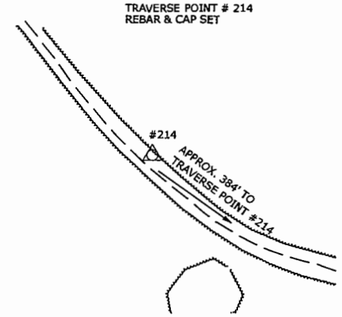

LAT: 38° 43' 34.26506"
LONG: 77° 08' 20.78981"

TRAVERSE POINT # 215
REBAR & CAP SET

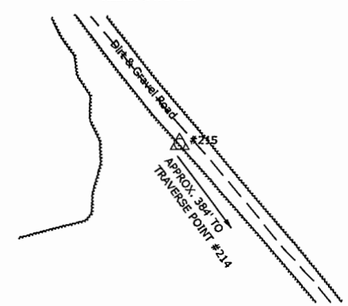

LAT: 38° 43' 37.07606"
LONG: 77° 08' 24.04731"

TRAVERSE POINT # 216
REBAR & CAP SET

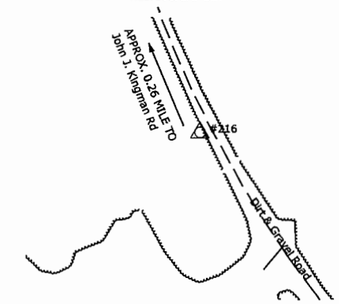

LAT: 38° 43' 39.94022"
LONG: 77° 08' 26.56072"

TRAVERSE POINT # 217
REBAR & CAP SET

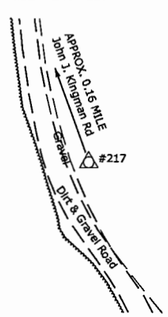

LAT: 38° 43' 44.57456"
LONG: 77° 08' 28.61849"

TRAVERSE POINT # 218
REBAR & CAP SET

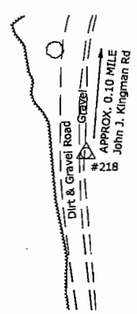

LAT: 38° 43' 47.60184"
LONG: 77° 08' 29.28832"

TRAVERSE POINT # 219
REBAR & CAP SET

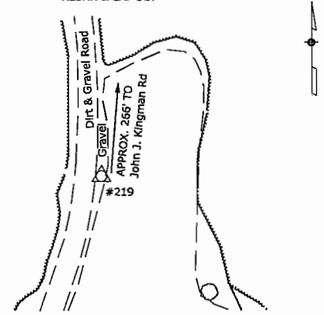

LAT: 38° 43' 50.23949"
LONG: 77° 08' 28.61139"

REFERENCES NOT
DRAWN TO SCALE

U.S. DEPARTMENT OF TRANSPORTATION
FEDERAL HIGHWAY ADMINISTRATION
EASTERN FEDERAL LANDS HIGHWAY DIVISION
STERLING, VIRGINIA

FORT BELVOIR - MULLIGAN ROAD

SURVEY CONTROL

Sheet 1 of 3

5/20/2008 10:04:09 AM C:\PWworking\PITT\dms60567\FortBel References.dgn

REG	STATE	PROJECT	SHEET NO.
-	VA	VA-A-AD-48(1)	A7

TRAVERSE POINT # 221
REBAR & CAP SET

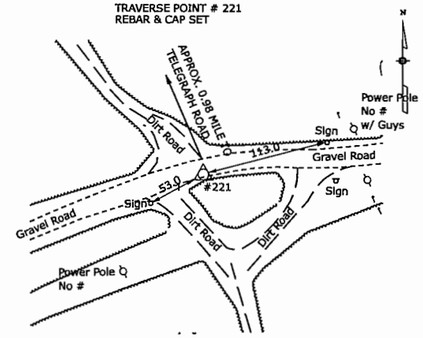

LAT: 38° 43' 52.44068"
LONG: 77° 08' 33.11213"

TRAVERSE POINT # 222
REBAR & CAP SET

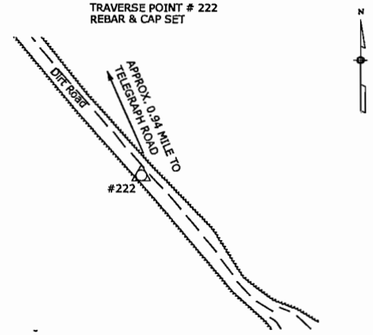

LAT: 38° 43' 54.13605"
LONG: 77° 08' 35.18394"

TRAVERSE POINT # 223
REBAR & CAP SET

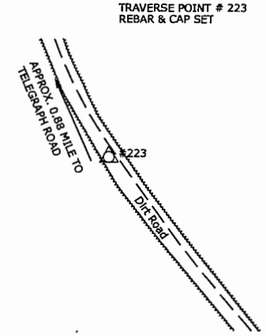

LAT: 38° 43' 56.40077"
LONG: 77° 08' 37.41102"

TRAVERSE POINT # 224
REBAR & CAP SET

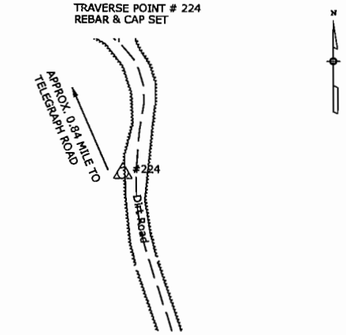

LAT: 38° 43' 59.12882"
LONG: 77° 08' 38.63920"

TRAVERSE POINT # 225
REBAR & CAP SET

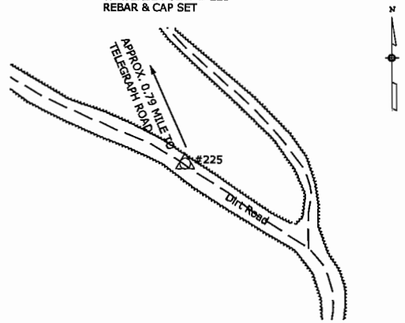

LAT: 38° 44' 01.02510"
LONG: 77° 08' 40.02502"

TRAVERSE POINT # 226
REBAR & CAP SET

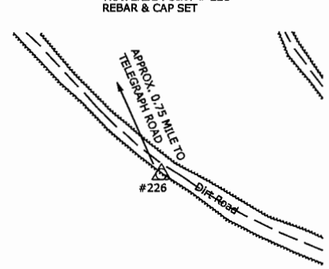

LAT: 38° 44' 01.99384"
LONG: 77° 08' 42.49923"

TRAVERSE POINT # 227
REBAR & CAP SET

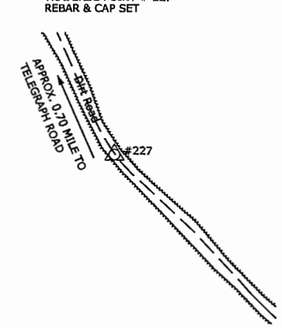

LAT: 38° 44' 03.81676"
LONG: 77° 08' 44.67932"

TRAVERSE POINT # 235
REBAR & CAP SET

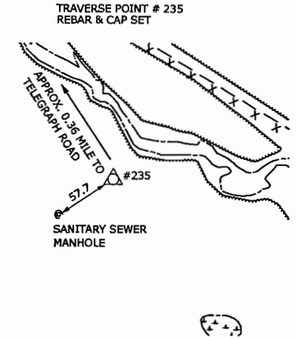

LAT: 38° 44' 23.91706"
LONG: 77° 08' 47.27480"

TRAVERSE POINT # 236
REBAR & CAP SET

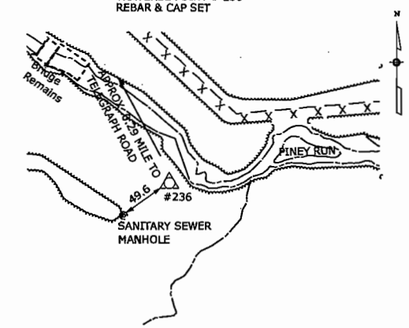

LAT: 38° 44' 25.53362"
LONG: 77° 08' 51.95339"

TRAVERSE POINT # 237
REBAR & CAP SET

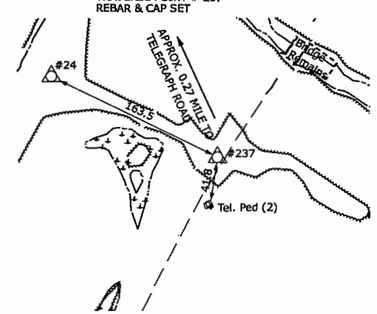

LAT: 38° 44' 25.77518"
LONG: 77° 08' 54.18327"

TRAVERSE POINT # 239
REBAR & CAP SET

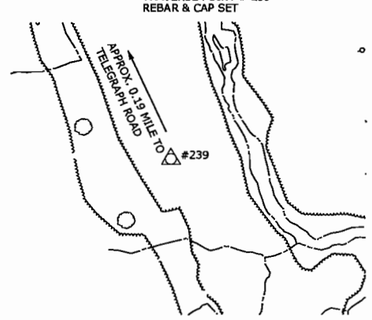

LAT: 38° 44' 28.97031"
LONG: 77° 08' 57.80923"

TRAVERSE POINT # 240
REBAR & CAP SET

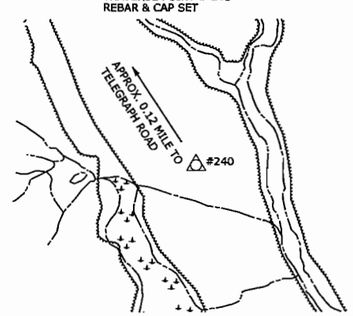

LAT: 38° 44' 32.31286"
LONG: 77° 08' 59.29017"

TRAVERSE POINT # 241
REBAR & CAP SET

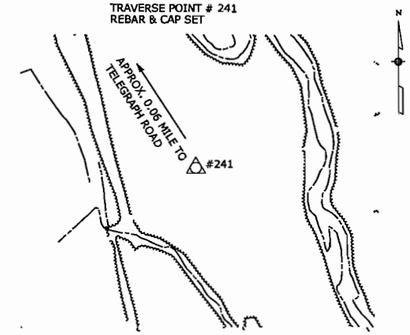

LAT: 38° 44' 35.59163"
LONG: 77° 09' 00.85046"

TRAVERSE POINT # 242
REBAR & CAP SET

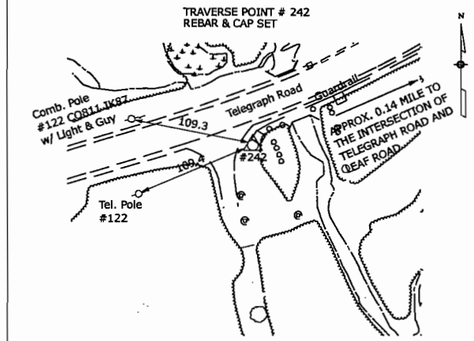

LAT: 38° 44' 38.30672"
LONG: 77° 09' 02.21667"

TRAVERSE POINT # 247
REBAR & CAP SET

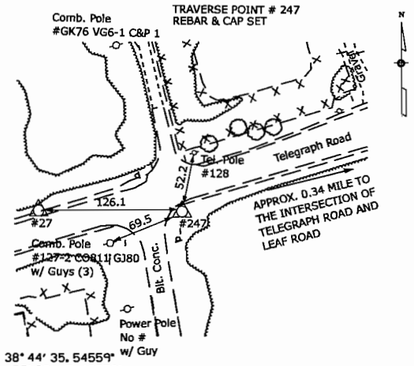

LAT: 38° 44' 35.54559"
LONG: 77° 09' 15.42759"

TRAVERSE POINT # 248
REBAR & CAP SET

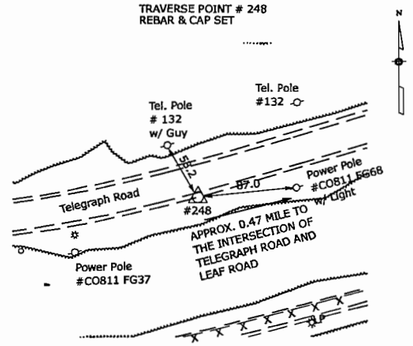

LAT: 38° 44' 33.78777"
LONG: 77° 09' 23.73187"

REFERENCES NOT DRAWN TO SCALE

U.S. DEPARTMENT OF TRANSPORTATION
FEDERAL HIGHWAY ADMINISTRATION
EASTERN FEDERAL LANDS HIGHWAY DIVISION
STERLING, VIRGINIA

FORT BELVOIR - MULLIGAN ROAD

SURVEY CONTROL

5/20/2008 10:05:22 AM C:\PWworking\FITT\dms60567\FortBel References.dgn

REG	STATE	PROJECT	SHEET NO.
-	VA	VA-A-AD-48(1)	A8

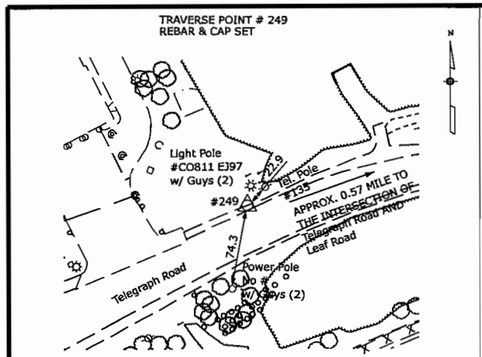

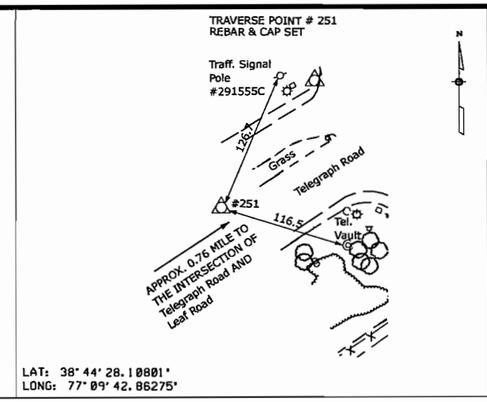

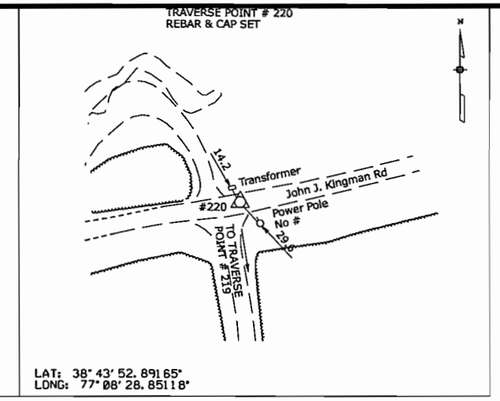

Point	Northing	Easting	Elev.	Description
201	6947674.408	11873719.101	25.230	PK
202	6947933.674	11873586.547	35.006	PK
204	6948726.518	11873153.159	39.421	PK
205	6949227.451	11872896.040	40.392	PK
206	6949773.046	11872656.391	34.742	RC
209	6950029.982	11872572.722	41.919	RC
210	6950314.506	11872430.446	55.545	RC
211	6950575.100	11872325.509	69.141	RC
214	6950804.983	11871855.899	120.588	RC
215	6951085.514	11871593.556	125.427	RC
216	6951372.298	11871390.101	118.406	RC
217	6951838.686	11871220.104	122.710	RC
218	6952144.136	11871162.496	115.768	RC
219	6952411.749	11871212.185	111.188	RC
220	6952679.756	11871189.213	108.923	RC
221	6952629.142	11870852.267	126.489	RC
222	6952798.216	11870685.569	138.280	RC
223	6953024.704	11870505.720	148.006	RC
224	6953299.232	11870404.329	146.089	RC
225	6953489.435	11870291.691	154.577	RC
226	6953584.537	11870094.204	149.645	RC
227	6953766.393	11869918.748	152.800	RC
229	6954399.581	11869684.302	165.188	RC
230	6954661.027	11869576.491	132.545	RC
231	6954851.755	11869494.647	128.656	RC
232	6955056.060	11869436.757	120.013	RC
233	6955333.586	11869585.432	103.863	RC
234	6955594.792	11869623.507	62.329	RC
235	6955796.678	11869683.120	51.546	RC
236	6955954.745	11869310.041	57.643	RC
237	6955976.578	11869133.017	60.942	RC
239	6956295.565	11868840.991	61.040	RC
240	6956631.968	11868718.689	60.249	RC
241	6956961.826	11868590.200	62.661	RC
242	6957234.890	11868477.927	71.075	RC
243	6946760.881	11872258.312	92.299	RC
244	6946917.673	11872907.754	53.843	RC
245	6947386.243	11873722.255	28.327	RC
247	6956940.213	11867435.421	121.457	PK
248	6956752.758	11866780.131	169.582	PK
249	6956683.146	11866244.324	209.470	RC
251	6956156.062	11865272.885	235.498	RC

Point	Latitude	Longitude
201	38 43 03.05092	77 07 57.87044
202	38 43 05.63284	77 07 59.49395
204	38 43 13.53251	77 08 04.81254
205	38 43 18.52118	77 08 07.96239
206	38 43 23.94868	77 08 10.88356
209	38 43 26.50035	77 08 11.89101
210	38 43 29.33327	77 08 13.63272
211	38 43 31.92420	77 08 14.90788
214	38 43 34.26506	77 08 20.78981
215	38 43 37.07606	77 08 24.04731
216	38 43 39.94022	77 08 26.56072
217	38 43 44.57456	77 08 28.61849
218	38 43 47.60184	77 08 29.28832
219	38 43 50.23949	77 08 28.61139
220	38 43 52.89165	77 08 28.85118
221	38 43 52.44068	77 08 33.11213
222	38 43 54.13605	77 08 35.18394
223	38 43 56.40077	77 08 37.41102
224	38 43 59.12882	77 08 38.63920
225	38 44 01.02510	77 08 40.02502
226	38 44 01.99384	77 08 42.49923
227	38 44 03.81676	77 08 44.67932
229	38 44 10.10894	77 08 47.51983
230	38 44 12.70860	77 08 48.83161
231	38 44 14.60555	77 08 49.82892
232	38 44 16.63319	77 08 50.52143
233	38 44 19.35442	77 08 48.59369
234	38 44 21.93045	77 08 48.06462
235	38 44 23.91706	77 08 47.27480
236	38 44 25.53362	77 08 51.95339
237	38 44 25.77518	77 08 54.18327
239	38 44 28.97031	77 08 57.80923
240	38 44 32.31286	77 08 59.29017
241	38 44 35.59163	77 09 00.85046
242	38 44 38.30672	77 09 02.21667
243	38 42 54.23686	77 08 16.46974
244	38 42 55.69116	77 08 08.24771
245	38 43 00.20242	77 07 57.88479
247	38 44 35.54559	77 09 15.42759
248	38 44 33.78777	77 09 23.73187
249	38 44 33.17722	77 09 30.50648
251	38 44 28.10801	77 09 42.86275

Notes:

1) Coordinate System: U.S. State Plane 1983
Coordinate Zone: Virginia North
Vertical Datum: NAVD '88.
All project values are expressed in feet and surface values. A combined scale factor of 1.00006 was used for the entire project.

2) No references were plotted to scale.

REFERENCES NOT
DRAWN TO SCALE

U.S. DEPARTMENT OF TRANSPORTATION
FEDERAL HIGHWAY ADMINISTRATION
EASTERN FEDERAL LANDS HIGHWAY DIVISION
STERLING, VIRGINIA

FORT BELVOIR - MULLIGAN ROAD

SURVEY CONTROL

5/20/2008 10:06:20 AM C:\PWworking\PITT\dms60561\FortBel References.dgn

REG	STATE	PROJECT	SHEET NO.
-	VA	VA-A-AD-48(1)	A9

FOR INFORMATION ONLY

Notes:
1. Range clearing limits are provided by the Fort Belvoir Directorate of Public Works. See Section 108 of the Special Contract Requirements for more information.

2. Information is based on Fort Belvoir GIS data.

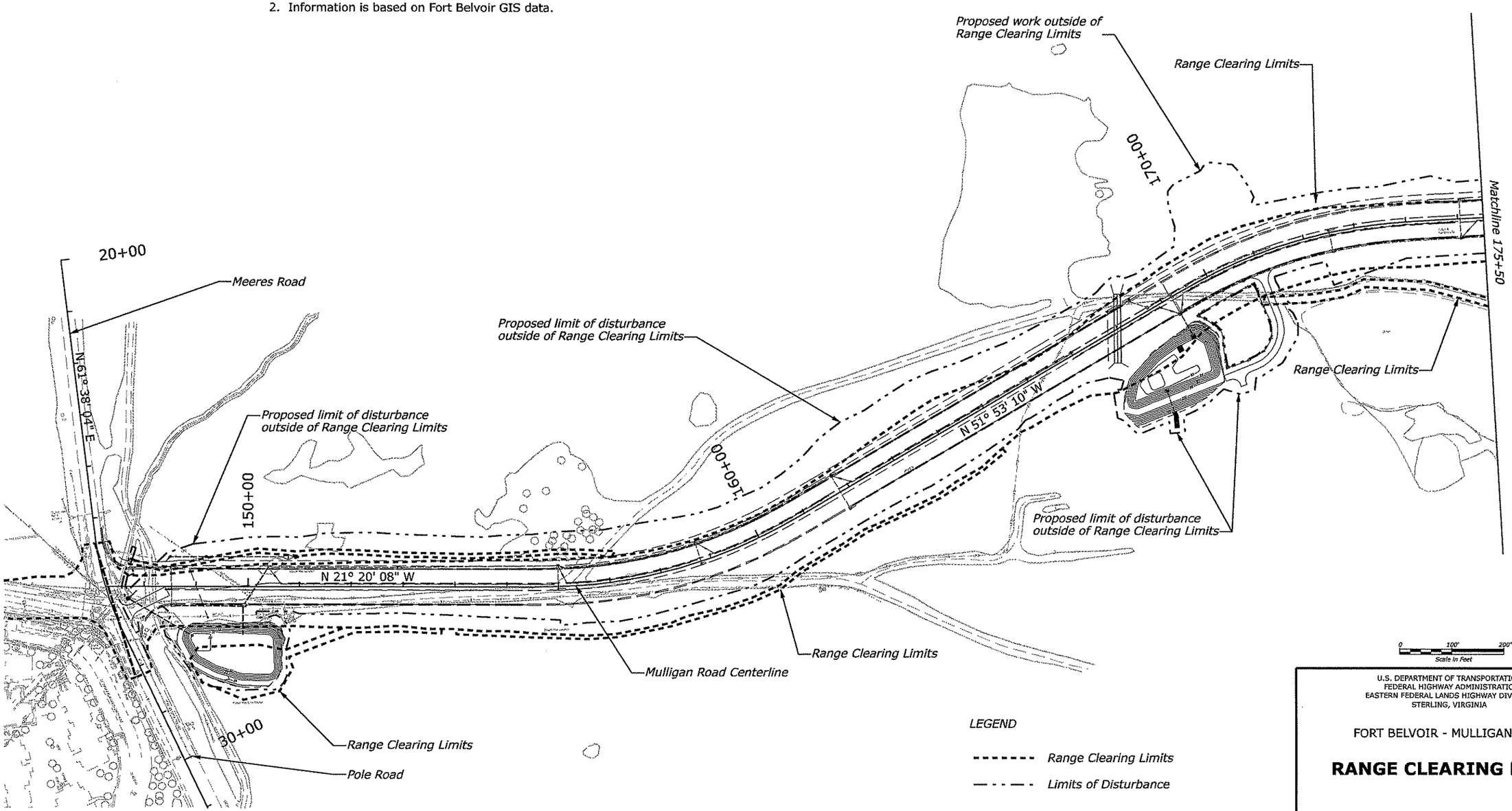

U.S. DEPARTMENT OF TRANSPORTATION
FEDERAL HIGHWAY ADMINISTRATION
EASTERN FEDERAL LANDS HIGHWAY DIVISION
STERLING, VIRGINIA

FORT BELVOIR - MULLIGAN ROAD

RANGE CLEARING LIMIT

7/3/2008 9:30:00 AM C:\PWworking\PITT\dms60567\A9.dgn

REG	STATE	PROJECT	SHEET NO.
-	VA	VA-A-AD-48(1)	A10

FOR INFORMATION ONLY

Notes:
1. Range clearing limits are provided by the Fort Belvoir Directorate of Public Works. See Section 108 of the Special Contract Requirements for more information.

2. Information is based on Fort Belvoir GIS data.

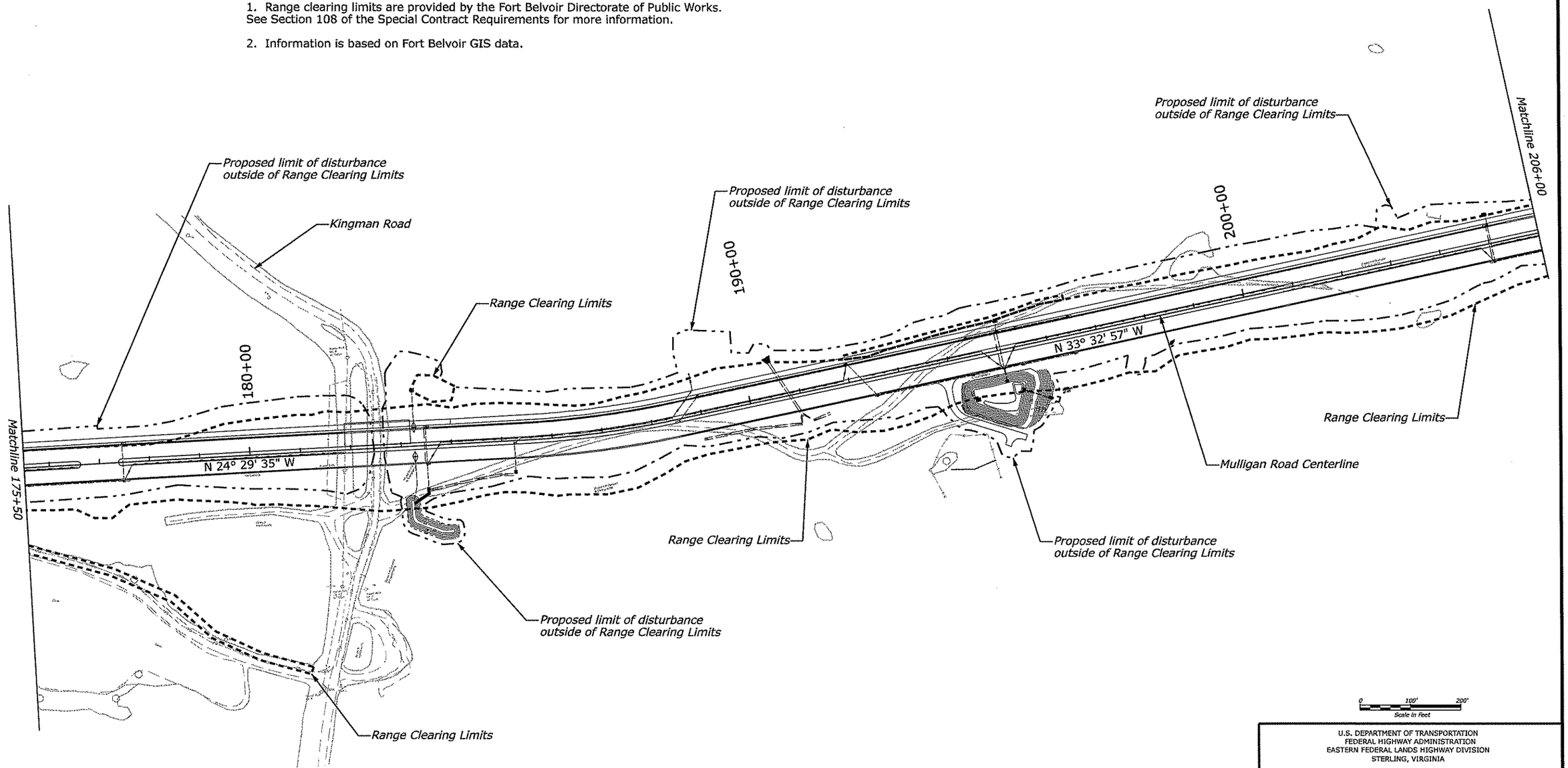

LEGEND

- - - - - - - Range Clearing Limits

— - - — - Limits of Disturbance

U.S. DEPARTMENT OF TRANSPORTATION
FEDERAL HIGHWAY ADMINISTRATION
EASTERN FEDERAL LANDS HIGHWAY DIVISION
STERLING, VIRGINIA

FORT BELVOIR - MULLIGAN ROAD

RANGE CLEARING LIMITS

7/3/2008 11:16:02 AM C:\PWworking\PITT\dms60567\A10.dgn

REG	STATE	PROJECT	SHEET NO.
-	VA	VA-A-AD-48(1)	A11

Notes:
1. Range clearing limits are provided by the Fort Belvoir Directorate of Public Works. See Section 108 of the Special Contract Requirements for more information.

2. Information is based on Fort Belvoir GIS data.

FOR INFORMATION ONLY

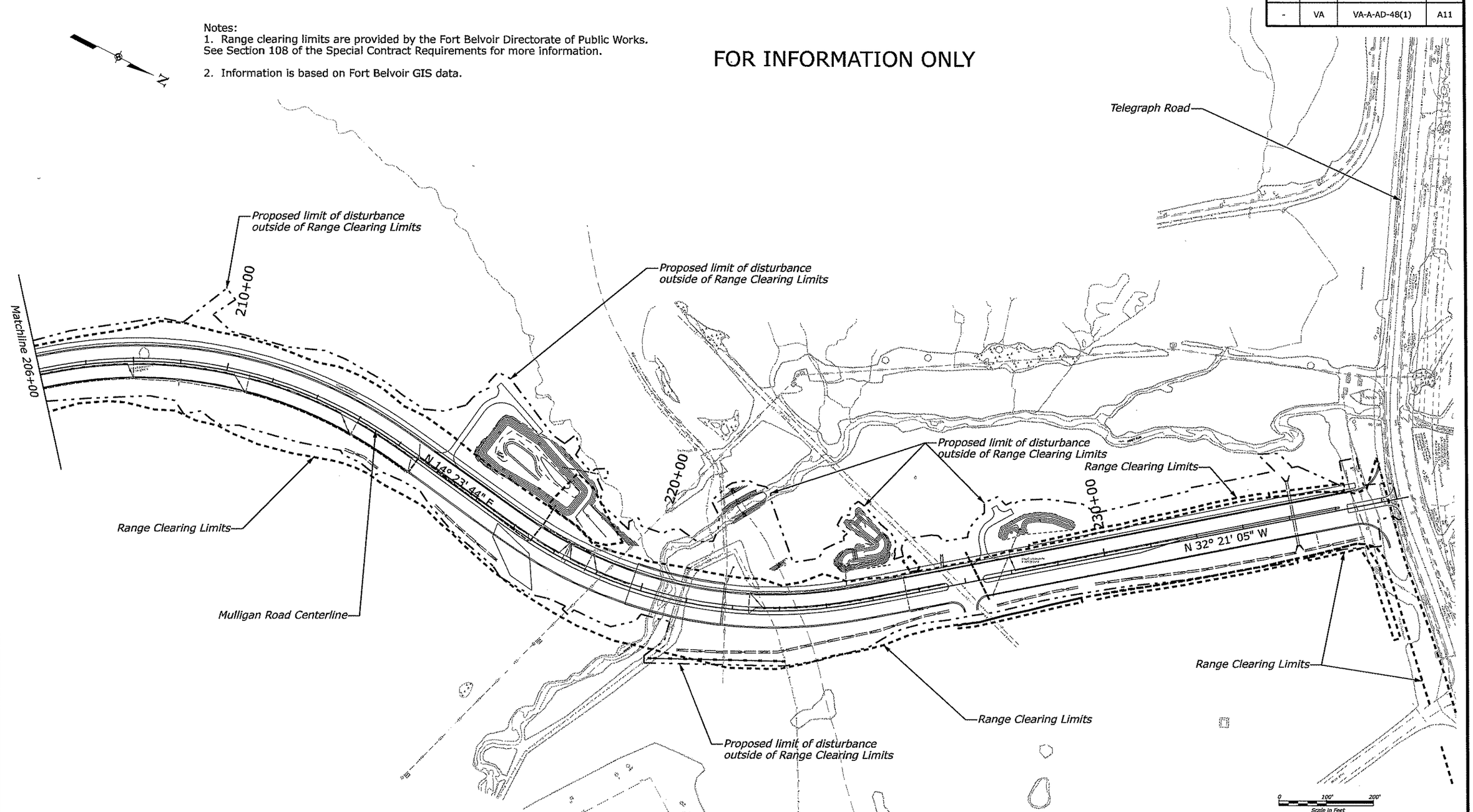

LEGEND

- - - - - - - Range Clearing Limits

— · - · — · Limits of Disturbance

U.S. DEPARTMENT OF TRANSPORTATION
FEDERAL HIGHWAY ADMINISTRATION
EASTERN FEDERAL LANDS HIGHWAY DIVISION
STERLING, VIRGINIA

FORT BELVOIR - MULLIGAN ROAD

RANGE CLEARING LIMITS

7/3/2008 11:16:35 AM C:\PWworking\PITT\dms60567\A11.dgn

REG	STATE	PROJECT	SHEET NO.
-	VA	VA-A-AD-48(1)	B1

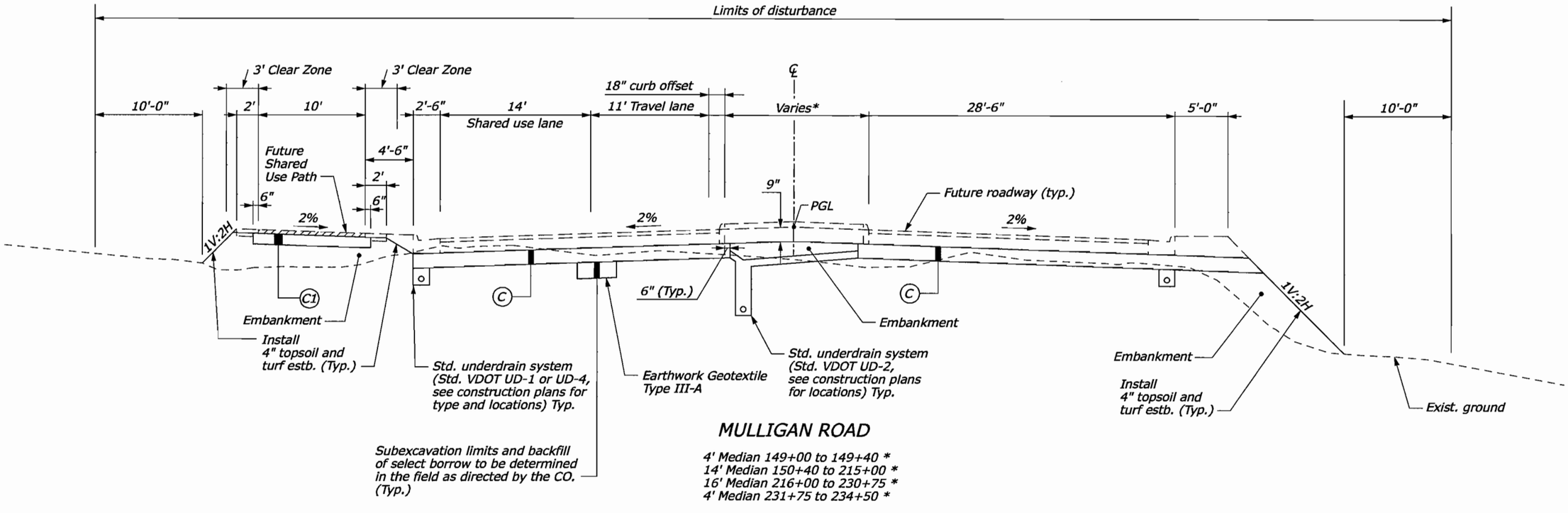

MULLIGAN ROAD

4' Median 149+00 to 149+40 *
14' Median 150+40 to 215+00 *
16' Median 216+00 to 230+75 *
4' Median 231+75 to 234+50 *

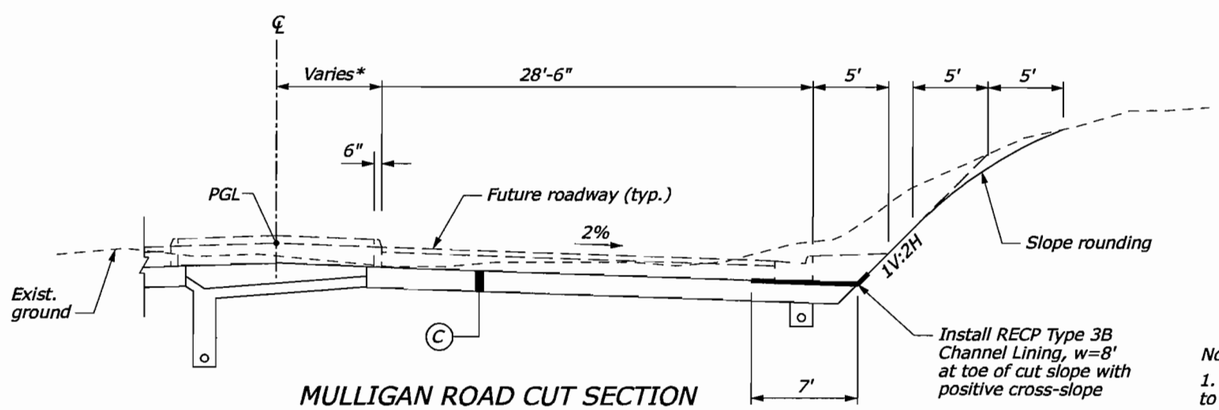

MULLIGAN ROAD CUT SECTION

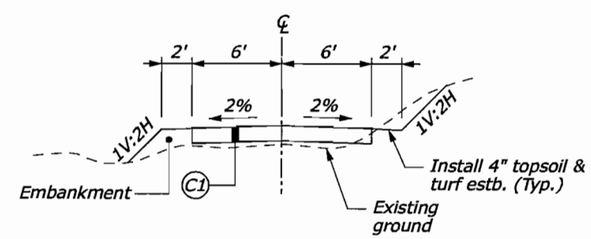

STORM WATER BASIN ACCESS ROAD

PAVEMENT DESIGN

(C) 9" Aggregate Base Course, Grading C or D

(C1) 6" Aggregate Base Course, Grading C or D

Notes:

1. Existing trees outside the limits of disturbance to remain in place unless otherwise noted or approved by CO.

2. The Contractor will establish existing vertical and horizontal grade control prior to disturbing any of the existing roadway. This information will be submitted to the CO for approval before beginning work.

3. Place aggregate base course in 2 equal lifts for depth greater than 8".

4. Construction of asphalt layers will be by others during a later phase of work.

5. Embankment material will have a minimum CBR-6 or as approved by the CO.

6. Landscaping will be provided in the future construction plans.

Not to scale

U.S. DEPARTMENT OF TRANSPORTATION
FEDERAL HIGHWAY ADMINISTRATION
EASTERN FEDERAL LANDS HIGHWAY DIVISION
STERLING, VIRGINIA

FORT BELVOIR - MULLIGAN ROAD

TYPICAL SECTIONS

6/12/2008 3:44:22 PM C:\PWworking\PITT\dms60567\B-RTC_typ2.dgn

REG	STATE	PROJECT	SHEET NO.
-	VA	VA-A-AD-48(1)	B2

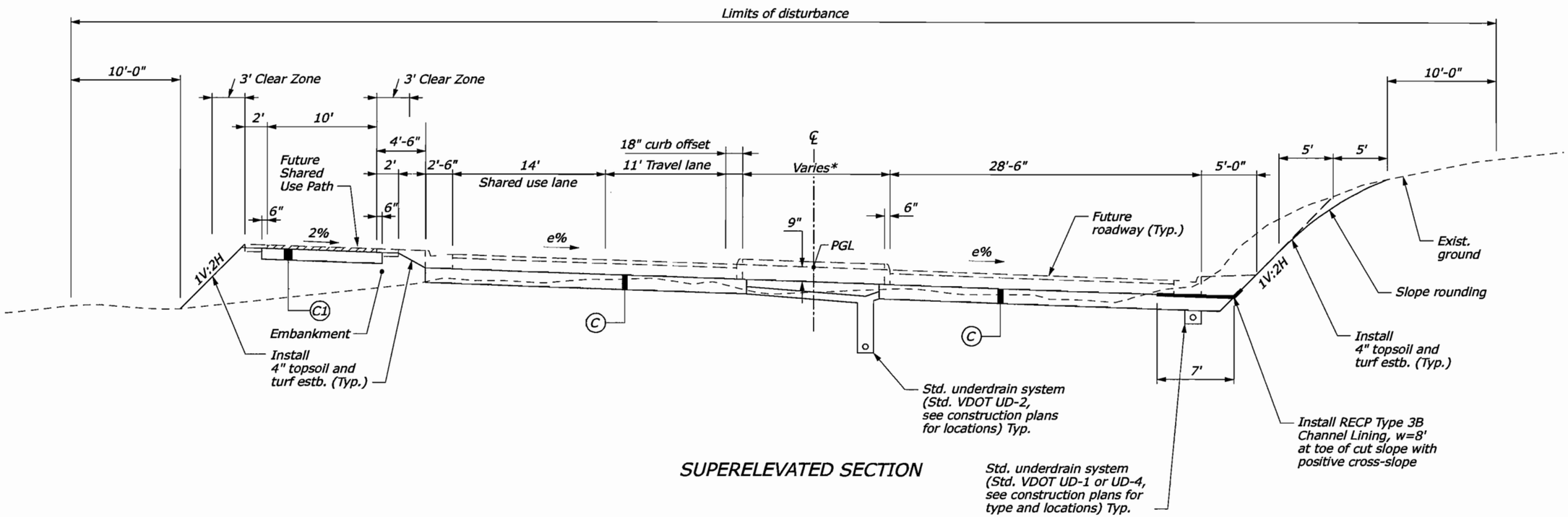

SUPERELEVATED SECTION

PAVEMENT DESIGN

(C) 9" Aggregate Base Course, Grading C or D

(C1) 6" Aggregate Base Course, Grading C or D

Notes:

1. Existing trees outside the limits of disturbance to remain in place unless otherwise noted or approved by CO.

2. The Contractor will establish existing vertical and horizontal grade control prior to disturbing any of the existing roadway. This information will be submitted to the CO for approval before beginning work.

3. Place aggregate base course in 2 equal lifts for depth greater than 8".

4. Construction of asphalt layers will be by others during a later phase of work.

5. Embankment material will have a minimum CBR-6 or as approved by the CO.

6. Landscaping will be provided in the future construction plans.

Not to scale

U.S. DEPARTMENT OF TRANSPORTATION
FEDERAL HIGHWAY ADMINISTRATION
EASTERN FEDERAL LANDS HIGHWAY DIVISION
STERLING, VIRGINIA

FORT BELVOIR - MULLIGAN ROAD

TYPICAL SECTIONS

Sheet 2 of 2

6/12/2008 3:49:50 PM C:\PWworking\PITT\dms60567\B-RTC_typ5.dgn

REG	STATE	PROJECT	SHEET NO.
-	VA	VA-A-AD-48(1)	C1

SCHEDULE A:
GRADING, DRAINAGE AND AGGREGATE BASE FROM POLE ROAD TO TELEGRAPH ROAD, AND BRIDGE OVER PINEY RUN

ITEM	DESCRIPTION	UNIT	PLAN SHEET SECTION SCHEDULE A	ESTIMATED QUANTITIES PLAN	ESTIMATED QUANTITIES BID SCHEDULE
15101-0000	MOBILIZATION	LPSM		ALL	ALL
15201-0000	CONSTRUCTION SURVEY AND STAKING	LPSM		ALL	ALL
15401-0000	CONTRACTOR TESTING	LPSM		ALL	ALL
15501-0000	CONSTRUCTION SCHEDULE	LPSM		ALL	ALL
15705-0100	SOIL EROSION CONTROL, SILT FENCE	LNFT	8000	8000	8,000
15705-0100	SOIL EROSION CONTROL, SILT FENCE (SUPER SILT FENCE)	LNFT	3700	3700	3,700
15705-0400	SOIL EROSION CONTROL, EARTH BERMS	LNFT	9200	9200	9,200
15705-0500	SOIL EROSION CONTROL, TEMPORARY CULVERT PIPE	LNFT	250	250	250
15705-1300	SOIL EROSION CONTROL, TEMPORARY DIVERSION CHANNEL	LNFT	150	150	150
15706-0200	SOIL EROSION CONTROL, CHECK DAM	EACH	34	34	34
15706-0300	SOIL EROSION CONTROL, SANDBAG	EACH	800	800	800
15706-0500	SOIL EROSION CONTROL, INLET SEDIMENT TRAP (TY. A)	EACH	6	6	6
15706-0500	SOIL EROSION CONTROL, INLET SEDIMENT TRAP (TY. B)	EACH	68	68	68
15706-0600	SOIL EROSION CONTROL, RISER PIPE ASSEMBLY (TEMP. SEDIMENT BASIN)	EACH	2	2	2
15706-0600	SOIL EROSION CONTROL, RISER PIPE ASSEMBLY (SWM STRUCTURES)	EACH	3	3	3
20101-0000	CLEARING AND GRUBBING	ACRE	38	38.0	38.0
20301-0400	REMOVAL OF BRIDGE	EACH	1	1	1
20301-2700	REMOVAL OF STRUCTURE (CONCRETE BUNKER)	EACH	1	1	1
20302-0900	REMOVAL OF FENCE, CHAIN LINK	LNFT	600	600	600
20302-1200	REMOVAL OF GUARDRAIL	LNFT	135	135	135
20310-1000	PLUG, EXISTING PIPE (TEMP. NEW PIPE PLUG)	EACH	1	1	1
20402-0000	SUBEXCAVATION	CUYD	8000	8000	8,000
20410-0000	SELECT BORROW	CUYD	8000	8000	8,000
20420-0000	EMBANKMENT CONSTRUCTION	CUYD	166000	166000	166,000
20701-1000	EARTHWORK GEOTEXTILE, TYPE III-A	SQYD	16000	16000	16,000
20701-1400	EARTHWORK GEOTEXTILE, TYPE IV-C	SQYD	1400	1400	1,400
20801-0000	STRUCTURE EXCAVATION	CUYD	300	300	300

U.S. DEPARTMENT OF TRANSPORTATION
FEDERAL HIGHWAY ADMINISTRATION
EASTERN FEDERAL LANDS HIGHWAY DIVISION
STERLING, VIRGINIA

FORT BELVOIR - MULLIGAN ROAD

TABULATION OF QUANTITIES SHEET

SCHEDULE A

6/20/2008 8:28:41 AM C:\PWworking\PITT\dms50556\Tab_Quan_1.dgn

REG	STATE	PROJECT	SHEET NO.
-	VA	VA-A-AD-48(1)	C2

SCHEDULE A:
GRADING, DRAINAGE AND AGGREGATE BASE FROM POLE ROAD TO TELEGRAPH ROAD, AND BRIDGE OVER PINEY RUN

PLAN SHEET SECTION
SCHEDULE A

ITEM	DESCRIPTION	UNIT		ESTIMATED QUANTITIES PLAN	ESTIMATED QUANTITIES BID SCHEDULE
20803-0000	STRUCTURAL BACKFILL	CUYD	450	450	450
25102-2000	PLACED RIPRAP, CLASS 2	TON	150	150	150
25102-3000	PLACED RIPRAP, CLASS 3	TON	2400	2400	2,400
25102-4000	PLACED RIPRAP, CLASS 4	TON	160	160	160
25302-2000	GABIONS, POLYVINYL CHLORIDE COATED	CUYD	125	125	125
30101-4000	AGGREGATE BASE GRADING C OR D	TON	36500	36500	36,500
55101-0800	PRECAST PRESTRESSED CONCRETE PILES, 18-INCH X 18-INCH, IN PLACE	LNFT	5580	5580	5,580
55101-1000	PRECAST PRESTRESSED CONCRETE PILES, 24-INCH X 24-INCH, IN PLACE	LNFT	1710	1710	1,710
55104-1000	DYNAMIC PILE LOAD TEST	EACH	3	3	3
55120-0000	TEST PILES	LNFT	300	300	300
55201-0200	STRUCTURAL CONCRETE, CLASS A (AE)	CUYD	480	480	480
55201-1100	STRUCTURAL CONCRETE, CLASS HPC	CUYD	680	680	680
55202-1000	STRUCTURAL CONCRETE, CLASS D (AE), FOR APPROACH SLABS, TYPE 1	SOYD	260	260	260
55401-1000	REINFORCING STEEL	LB	44000	44000	44,000
55401-2000	REINFORCING STEEL, EPOXY COATED	LB	191000	191000	191,000
55502-0000	STRUCTURAL STEEL, FURNISHED, FABRICATED, AND ERECTED	LB	442000	442000	442,000
55601-0500	BRIDGE RAILING, CONCRETE	LNFT	242	242	242
55601-1200	BRIDGE RAILING, STEEL, THREE RAIL	LNFT	223	223	223
56401-1000	BEARING DEVICE, ELASTOMERIC	EACH	27	27	27
60103-0020	CONCRETE, HEADWALL FOR 6-INCH PIPE CULVERT	EACH	3	3	3
60103-0080	CONCRETE, HEADWALL FOR 15-INCH PIPE CULVERT	EACH	7	7	7
60103-0100	CONCRETE, HEADWALL FOR 18-INCH PIPE CULVERT	EACH	3	3	3
60103-0140	CONCRETE, HEADWALL FOR 24-INCH PIPE CULVERT	EACH	1	1	1
60103-0160	CONCRETE, HEADWALL FOR 30-INCH PIPE CULVERT	EACH	1	1	1
60103-0240	CONCRETE, HEADWALL FOR 54-INCH PIPE CULVERT	EACH	4	4	4
60103-1980	CONCRETE, HEADWALL FOR 42-INCH EQUIVALENT DIAMETER PIPE CULVERT	EACH	2	2	2

U.S. DEPARTMENT OF TRANSPORTATION
FEDERAL HIGHWAY ADMINISTRATION
EASTERN FEDERAL LANDS HIGHWAY DIVISION
STERLING, VIRGINIA

FORT BELVOIR - MULLIGAN ROAD

TABULATION OF QUANTITIES SHEET

SCHEDULE A

6/20/2008 8:29:12 AM C:\PWworkingVPITT\dms60567\Tab_Quan_1.dgn

REG	STATE	PROJECT	SHEET NO.
-	VA	VA-A-AD-48(1)	C3

SCHEDULE A:
GRADING, DRAINAGE AND AGGREGATE BASE FROM POLE ROAD TO TELEGRAPH ROAD, AND BRIDGE OVER PINEY RUN

ITEM	DESCRIPTION	UNIT	PLAN SHEET SECTION SCHEDULE A	ESTIMATED QUANTITIES PLAN	ESTIMATED QUANTITIES BID SCHEDULE
60201-0500	15-INCH PIPE CULVERT	LNFT	5000	5000	5,000
60201-0600	18-INCH PIPE CULVERT	LNFT	1500	1500	1,500
60201-0800	24-INCH PIPE CULVERT	LNFT	350	350	350
60201-0900	30-INCH PIPE CULVERT	LNFT	450	450	450
60201-1300	54-INCH PIPE CULVERT	LNFT	300	300	300
60202-0200	18-INCH EQUIVALENT DIAMETER ARCH OR ELLIPTICAL PIPE CULVERT	LNFT	250	250	250
60202-0400	24-INCH EQUIVALENT DIAMETER ARCH OR ELLIPTICAL PIPE CULVERT	LNFT	100	100	100
60202-0500	30-INCH EQUIVALENT DIAMETER ARCH OR ELLIPTICAL PIPE CULVERT	LNFT	60	60	60
60202-0700	42-INCH EQUIVALENT DIAMETER ARCH OR ELLIPTICAL PIPE CULVERT	LNFT	130	130	130
60220-4150	12 FEET SPAN, 10 FEET RISE PRECAST REINFORCED CONCRETE BOX CULVERT	LNFT	132	132	132
60403-0000	INLET (VDOT STD. DI-1)	EACH	2	2	2
60403-0000	INLET (VDOT STD. DI-3A)	EACH	7	7	7
60403-0000	INLET (VDOT STD. DI-3B L=4')	EACH	6	6	6
60403-0000	INLET (VDOT STD. DI-3B L=6')	EACH	11	11	11
60403-0000	INLET (VDOT STD. DI-3B L=8')	EACH	17	17	17
60403-0000	INLET (VDOT STD. DI-3B L=10')	EACH	5	5	5
60403-0000	INLET (VDOT STD. DI-3B L=12')	EACH	3	3	3
60403-0000	INLET (VDOT STD. DI-3B L=14')	EACH	2	2	2
60403-0000	INLET (VDOT STD. DI-3BB L=4')	EACH	5	5	5
60403-0000	INLET (VDOT STD. DI-3BB L=6')	EACH	3	3	3
60403-0000	INLET (VDOT STD. DI-3BB L=8')	EACH	2	2	2
60403-0000	INLET (VDOT STD. DI-3C L=6')	EACH	7	7	7
60403-0000	INLET (VDOT STD. DI-5)	EACH	1	1	1
60403-0000	INLET (VDOT STD. DI-12 L=4')	EACH	2	2	2
60403-0000	INLET (VDOT STD. DI-12 L=6')	EACH	1	1	1
60410-0000	SPRINGBOX (SPRING DRAIN)	EACH	11	11	11

U.S. DEPARTMENT OF TRANSPORTATION
FEDERAL HIGHWAY ADMINISTRATION
EASTERN FEDERAL LANDS HIGHWAY DIVISION
STERLING, VIRGINIA

FORT BELVOIR - MULLIGAN ROAD

TABULATION OF QUANTITIES SHEET

SCHEDULE A

6/20/2008 8:29:35 AM C:\PWworking\PITT\dms60567\Tab_Quan_1.dgn

REG	STATE	PROJECT	SHEET NO.
-	VA	VA-A-AD-48(1)	C4

SCHEDULE A:
GRADING, DRAINAGE AND AGGREGATE BASE FROM POLE ROAD TO TELEGRAPH ROAD, AND BRIDGE OVER PINEY RUN

ITEM	DESCRIPTION	UNIT	PLAN SHEET SECTION SCHEDULE A	ESTIMATED QUANTITIES PLAN	ESTIMATED QUANTITIES BID SCHEDULE
60501-0000	STANDARD UNDERDRAIN SYSTEM (VDOT UD-1)	LNFT	3300	3300	3,300
60501-0000	STANDARD UNDERDRAIN SYSTEM (VDOT UD-2)	LNFT	8100	8100	8,100
60501-0000	STANDARD UNDERDRAIN SYSTEM (VDOT UD-4)	LNFT	8500	8500	8,500
60501-0000	STANDARD UNDERDRAIN SYSTEM (VDOT CD-1)	LNFT	320	320	320
60501-0000	STANDARD UNDERDRAIN SYSTEM (VDOT CD-2)	LNFT	390	390	390
60510-1060	10-INCH OUTLET PIPE	LNFT	50	50	50
60520-0000	GRANULAR BACKFILL	CUYD	8100	8100	8,100
61103-1500	24-INCH ENCASEMENT PIPE, GALVANIZED STEEL	LNFT	150	150	150
61103-1500	24-INCH ENCASEMENT PIPE, GALVANIZED STEEL (36-INCH DIAMETER ENCASEMENT PIPE)	LNFT	200	200	200
61401-0000	LEAN CONCRETE BACKFILL	CUYD	30	30	30
61901-2100	FENCE, CHAIN LINK, 96-INCH HEIGHT (BARB WIRE, 3 STRAND)	LNFT	300	300	300
61902-2200	GATE, METAL, 34 FEET WIDTH	EACH	3	3	3
62101-0000	MONUMENT (SETTLEMENT MONITORING)	EACH	14	14	14
62401-0300	FURNISHING AND PLACING TOPSOIL, 4-INCH DEPTH	SQYD	70000	70000	70,000
62502-0000	TURF ESTABLISHMENT	SQYD	70000	70000	70,000
62901-1000	ROLLED EROSION CONTROL PRODUCT, TYPE 3.B	SQYD	9200	9200	9,200
62901-1200	ROLLED EROSION CONTROL PRODUCT, TYPE 5.A	SQYD	4100	4100	4,100
62901-1400	ROLLED EROSION CONTROL PRODUCT, TYPE 5.C	SQYD	2200	2200	2,200
63502-1300	TEMPORARY TRAFFIC CONTROL, DRUM	EACH	40	40	40
63502-2100	TEMPORARY TRAFFIC CONTROL, CRASH CUSHION	EACH	3	3	3
63502-2700	TEMPORARY TRAFFIC CONTROL, REPLACEMENT CARTRIDGES FOR CRASH CUSHION	EACH	3	3	3
63503-0300	TEMPORARY TRAFFIC CONTROL, BARRICADE TYPE 3	LNFT	40	40	40
63503-0400	TEMPORARY TRAFFIC CONTROL, CONCRETE BARRIER	LNFT	625	625	625
63503-1000	TEMPORARY TRAFFIC CONTROL, PLASTIC FENCE	LNFT	500	500	500
63504-1000	TEMPORARY TRAFFIC CONTROL, CONSTRUCTION SIGN	SQFT	320	320	320
63506-0500	TEMPORARY TRAFFIC CONTROL, FLAGGER	HOUR	350	350	350
63701-0000	FIELD OFFICE	EACH	1	1	1
64501-0000	LOCATE UTILITIES	LPSM	ALL	ALL	ALL

U.S. DEPARTMENT OF TRANSPORTATION
FEDERAL HIGHWAY ADMINISTRATION
EASTERN FEDERAL LANDS HIGHWAY DIVISION
STERLING, VIRGINIA

FORT BELVOIR - MULLIGAN ROAD

TABULATION OF QUANTITIES SHEET

SCHEDULE A

6/20/2008 8:29:54 AM C:\PWworking\PITT\dms6056\Tab_Quan.dgn

REG	STATE	PROJECT	SHEET NO.
-	VA	VA-A-AD-48(1)	C5

SCHEDULE B:
BRIDGE OVER KINGMAN ROAD

ITEM	DESCRIPTION	UNIT	PLAN SHEET SECTION SCHEDULE B	ESTIMATED QUANTITIES PLAN	ESTIMATED QUANTITIES BID SCHEDULE
15101-0000	MOBILIZATION	LPSM		ALL	ALL
15201-0000	CONSTRUCTION SURVEY AND STAKING	LPSM		ALL	ALL
15401-0000	CONTRACTOR TESTING	LPSM		ALL	ALL
20701-1400	EARTHWORK GEOTEXTILE, TYPE IV-C	SQYD	800	800	800
20801-0000	STRUCTURE EXCAVATION	CUYD	300	300	300
20803-0000	STRUCTURAL BACKFILL	CUYD	1000	1000	1,000
25102-1000	PLACED RIPRAP, CLASS 1	TON	700	700	700
55101-0500	PRECAST PRESTRESSED CONCRETE PILES, 12-INCH X 12-INCH, IN PLACE	LNFT	4832	4832	4,832
55104-1000	DYNAMIC PILE LOAD TEST	EACH	2	2	2
55120-0000	TEST PILES	LNFT	142	142	142
55201-0200	STRUCTURAL CONCRETE, CLASS A (AE)	CUYD	310	310	310
55201-0200	STRUCTURAL CONCRETE, CLASS A (AE)	CUYD	60	60	60
55201-1100	STRUCTURAL CONCRETE, CLASS HPC	CUYD	250	250	250
552D2-1000	STRUCTURAL CONCRETE, CLASS D (AE), FOR APPROACH SLABS, TYPE 1	SQYD	230	230	230
55401-1000	REINFORCING STEEL	LB	47000	47000	47,000
55401-2000	REINFORCING STEEL, EPOXY COATED	LB	59000	59000	59,000
55401-2500	REINFORCING STEEL, GALVANIZED	LB	3100	3100	3,100
55502-0000	STRUCTURAL STEEL, FURNISHED, FABRICATED, AND ERECTED	LB	198000	198000	198,000
55601-0500	BRIDGE RAILING, CONCRETE	LNFT	130	130	130
556D1-1200	BRIDGE RAILING, STEEL, THREE RAIL	LNFT	130	130	130
56401-1000	BEARING DEVICE, ELASTOMERIC	EACH	10	10	10
60203-0200	6-INCH SLOTTED DRAIN PIPE	LNFT	300	300	300
60520-0000	GRANULAR BACKFILL	CUYD	80	80	80
609D2-0800	CURB AND GUTTER, CONCRETE, 10-INCH DEPTH	LNFT	310	310	310

U.S. DEPARTMENT OF TRANSPORTATION
FEDERAL HIGHWAY ADMINISTRATION
EASTERN FEDERAL LANDS HIGHWAY DIVISION
STERLING, VIRGINIA

FORT BELVOIR - MULLIGAN ROAD

TABULATION OF QUANTITIES SHEET

SCHEDULE B - KINGMAN ROAD BRIDGE

6/20/2008 8:30:14 AM C:\PWworking\PITT\dms50561\Tab_Quan_1.dgn

REG	STATE	PROJECT	SHEET NO.
-	VA	VA-A-AD-48(1)	C6

LOCATION	LENGTH	
	FEET	MILE
Mulligan Road 149+00.00 to 234+50.00	8,550	1.62
TOTAL	8,550	1.62
PROJECT TOTAL	1.62 Miles	

U.S. DEPARTMENT OF TRANSPORTATION
FEDERAL HIGHWAY ADMINISTRATION
EASTERN FEDERAL LANDS HIGHWAY DIVISION
STERLING, VIRGINIA

FORT BELVOIR - MULLIGAN ROAD

MILE TABULATION

Sheet 1 of 1

6/6/2008 11:11:12 AM C:\PWworking\PITT\dms50567\Mile_Tab.dgn

REG	STATE	PROJECT	SHEET NO.
-	VA	VA-A-AD-48(1)	C7

LOCATION	* ROADWAY EXCAVATION	PAY ITEM 20402-0000 SUB EXCAVATION	PAY ITEM 20410-0000 SELECT BORROW	PAY ITEM 20420-0000 EMBANKMENT
ROADWAY	(CUYD)	(CUYD)	(CUYD)	(CUYD)
MULLIGAN ROAD	129,244			159,340
SWM ACCESS ROADS	531			2,371
SWM BASINS & TRAPS	14,207			3,530
SOILS & FOUNDATION REPORT		8,000	8,000	
SUBTOTAL	143,802	8,000	8,000	165,241
AS REQUIRED				759
TOTAL		8,000	8,000	166,000

* NON PAY ITEM, INCLUDED AS INFORMATION ONLY

U.S. DEPARTMENT OF TRANSPORTATION
FEDERAL HIGHWAY ADMINISTRATION
EASTERN FEDERAL LANDS HIGHWAY DIVISION
STERLING, VIRGINIA

FORT BELVOIR - MULLIGAN ROAD

EARTHWORK SUMMARY

6/18/2008 2:24:07 PM C:\PWworking\PITT\dms50567\Earthwork_Sum.dgn

REG	STATE	PROJECT	SHEET NO.
-	VA	VA-A-AD-48(1)	C8

LOCATION				PAY ITEM 30101-4000 AGGREGATE BASE GRADING C OR D
ROADWAY*				(TON)
MULLIGAN RD	149+00	TO	234+50	30,997
CONSTRUCTION ENTRANCES AND SWM BASIN ACCESS ROADS				5,173
SWALES				101
MAINLINE SUBTOTAL				30,997
OTHERS SUBTOTAL				5,274
AS REQUIRED				229
TOTAL				36,500

* Roadway quantity with shared use path

U.S. DEPARTMENT OF TRANSPORTATION
FEDERAL HIGHWAY ADMINISTRATION
EASTERN FEDERAL LANDS HIGHWAY DIVISION
STERLING, VIRGINIA

FORT BELVOIR - MULLIGAN ROAD

PAVEMENT SUMMARY

Sheet 1 of 1

6/18/2008 2:15:32 PM C:\PWworking\PITT\dms60567\Pav_Sum.dgn

MULLIGAN ROAD

REG	STATE	PROJECT	SHEET NO.
-	VA	VA-A-AD-48(1)	C9

STRUCTURE NO.	PAY ITEM 60403-0000 INLET (VDOT STD. DI-3C, L=6') (EACH)	PAY ITEM 60403-0000 INLET (VDOT STD. DI-3BB, L=8') (EACH)	PAY ITEM 6D403-0000 INLET (VDOT STD. DI-3BB, L=6') (EACH)	PAY ITEM 60403-0000 INLET (VDOT STD. DI-3BB, L=4') (EACH)	PAY ITEM 60403-0000 INLET (VDOT STD. DI-3B, L=14') (EACH)	PAY ITEM 60403-0000 INLET (VDOT STD. DI-3B, L=12') (EACH)	PAY ITEM 60403-0000 INLET (VDOT STD. DI-3B, L=10') (EACH)	PAY ITEM 60403-0000 INLET (VDOT STD. DI-3B, L=8') (EACH)	PAY ITEM 60403-0000 INLET (VDOT STD. DI-3B, L=6') (EACH)	PAY ITEM 60403-0000 INLET (VDDT STD. DI-3B, L=4') (EACH)	PAY ITEM 60403-0D00 INLET (VDOT STD. DI-3A) (EACH)	PAY ITEM 60403-0000 INLET (VDOT STD. DI-12, L=6') (EACH)	PAY ITEM 60403-0000 INLET (VDOT STD. DI-12, L=4') (EACH)	PAY ITEM 60403-0000 INLET (VDOT STD. DI-5) (EACH)	PAY ITEM 60403-00D0 INLET (VDOT STD. DI-1) (EACH)
D1-1								1							
D1-2															
D1-3		1													
D1-4			1												
D1-8												1			
D1-9								1							1
D1-10								1							1
D2-1															
D2-2															
D2-3															
D3-1															
D3-2															
D3-3															
D3-4															
D4-1											1				
D4-2											1				
D4-3															
D4-4															
D4-5										1					
D4-6															
D4-8															
D4-11															
D4-12											1				
D5-1															
D5-2															
D5-3															
D5-4															
D5-5															
D5-6															
D6-1															
D6-2															
D6-3															
D7-1															
D7-2															
D7-3															
D7-4															
D8-1															
D8-2															
D8-3															
D8-4															
D8-6												1			
D8-7												1			
D8-8															
D8-9															
D8-12													1		
D9-1													1		
D9-2															
D9-3															
D10-1															
D10-2															
D10-3															
D10-4															
D10-5															
D10-6															
D10-7												1			
D10-8														1	
D11-1															
D11-2															
D11-3															
D11-4										1					
D11-5															
D11-6															
D11-8															
D11-9															
D12-1															
D12-2															
D12-3											1				
D12-4															
D12-5												1			
D12-10															
D12-13															
D13-3															
D13-5															
D14-1															
Subtotal	7	2	3	5	2	3	5	17	11	6	7	1	2	1	2
As Required	7	2	3	5	2	3	5	17	11	6	7	1	2	1	2
Total															

PAY ITEM - VDOT SWM-1 STRUCTURE

Structure No.	SWM-1 LNFT
D4-9	6.5
D8-10	6.6
D11-11	5.55
Grand Total	23.1

U.S. DEPARTMENT OF TRANSPORTATION
FEDERAL HIGHWAY ADMINISTRATION
EASTERN FEDERAL LANDS HIGHWAY DIVISION
STERLING, VIRGINIA

FORT BELVOIR - MULLIGAN ROAD

DRAINAGE STRUCTURE PLACEMENT SUMMARY

6/18/2008 2:43:50 PM C:\PWworking\PITT\dms60567\Drah_Stru_Sum.dgn

REG	STATE	PROJECT	SHEET NO.
-	VA	VA-A-AD-48(1)	C10

MULLIGAN ROAD

Structure No.		Structure No.	PAY ITEM 60201-0500 15-INCH PIPE CULVERT	PAY ITEM 60201-0600 18-INCH PIPE CULVERT	PAY ITEM 60201-0800 24-INCH PIPE CULVERT	PAY ITEM 60201-0900 30-INCH PIPE CULVERT	PAY ITEM 60201-1000 54-INCH PIPE CULVERT	PAY ITEM 60202-0200 18-INCH EQUIVALENT DIAMETER ARCH OR ELLIPTICAL PIPE CULVERT	PAY ITEM 60202-0400 24-INCH EQUIVALENT DIAMETER ARCH OR ELLIPTICAL PIPE CULVERT	PAY ITEM 60202-0500 30-INCH EQUIVALENT DIAMETER ARCH OR ELLIPTICAL PIPE CULVERT	PAY ITEM 60202-0700 42-INCH EQUIVALENT DIAMETER ARCH OR ELLIPTICAL PIPE CULVERT	PAY ITEM 60202-0800 END SECTION FOR 24 INCH PIPE CULVERT	PAY ITEM 60103-0080 CONCRETE HEADWALL FOR 15 INCH PIPE CULVERT	PAY ITEM 60103-0100 CONCRETE HEADWALL FOR 18 INCH PIPE CULVERT	PAY ITEM 60103-0140 CONCRETE HEADWALL FOR 24 INCH PIPE CULVERT	PAY ITEM 60103-0160 CONCRETE HEADWALL FOR 30 INCH PIPE CULVERT	PAY ITEM 60103-1980 CONCRETE HEADWALL FOR 42 INCH EQUIVALENT DIAMETER PIPE CULVERT	PAY ITEM 60103-1320 CONCRETE HEADWALL FOR 54 INCH PIPE CULVERT	PAY ITEM 60103-2540 CONCRETE HEADWALL FOR 6 INCH UNDERDRAIN
			LNFT	LNFT	LNFT	LNFT	LNFT	LNFT	LNFT	LNFT	LNFT	(EACH)	(EACH)	(EACH)	(EACH)	(EACH)	(EACH)	(EACH)	(EACH)
D1-1	To	D1-2	71																
D1-2	To	D1-4						137											
D1-3	To	D1-4							88										
D1-4	To	D1-5								54									
D1-7	To	D1-6		136															
D1-8	To	D1-9		176															
D1-9	To	D1-10						68											
D1-10	To	D1-11			100							1							
D2-1	To	D1-3		248															
D2-2	To	D2-1	297																
D2-3	To	D2-2	40																
D3-1	To	D2-2	297																
D3-2	To	D3-1	40																
D3-3	To	D3-1	291																
D3-4	To	D3-3	71																
D4-1	To	D4-2	40																
D4-2	To	D4-3	48																
D4-3	To	D4-8	39																
D4-4	To	D4-8			92														
D4-5	To	D4-4		47															
D4-6	To	D4-3	32																
D4-8	To	D4-7			45										1				
D4-9	To	D4-10		43										1					
D4-11	To	D4-6	167																
D4-12	To	D4-1	42																
D5-1	To	D5-2	39																
D5-2	To	D4-5		175															
D5-3	To	D5-4	71																
D5-4	To	D5-2	245																
D5-5	To	D5-6	71																
D5-6	To	D5-4	238																
D6-1	To	D6-2	71																
D6-2	To	D6-4	45										1						
D6-3	To	D6-5	52										1						
D7-1	To	D7-2	60																
D7-2	To	D7-3	296																
D7-3	To	D7-4	86																
D7-4	To	D8-2	197																
D7-7	To	D7-6					126											2.00	
D8-1	To	D8-3	65																
D8-2	To	D8-4	65																
D8-3	To	D8-4		71															
D8-4	To	D8-5			20								1						
D8-6	To	D8-3	41																
D8-7	To	D8-4	41																
D8-8	To	D8-6	103																
D8-9	To	D8-7	103																

ALLOWABLE PIPE TYPES (UNLESS OTHERWISE SHOWN ON PLANS)

LOCATION	CONCRETE	ALUMINUM COATED TYPE 2 CORRUGATED STEEL	ALUMINUM COATED TYPE 2 CORRUGATED STEEL FULLY ASPHALT COATED	GALVANIZED CORRUGATED STEEL FULLY ASPHALT COATED WITH PAVED INVERT	GALVANIZED STEEL STRUCTURAL PLATE FULLY ASPHALT COATED WITH PAVED INVERT	GALVANIZED STEEL STRUCTURAL PLATE FULLY ASPHALT COATED	POLYMER COATED (10/10) CORRUGATED STEEL	UNCOATED GALVANIZED CORRUGATED STEEL	CORRUGATED ALUMINUM ALLOY CULVERTS & STRUCTURAL PLATE	PVC STORM DRAIN PIPE (SMOOTH INTERIOR)	POLYETHYLENE DOUBLE WALL TYPE S AND TYPE D	POLYETHYLENE CORRUGATED TYPE C
MULLIGAN ROAD	X											
STORM DRAIN SYSTEMS	X											

NOTE: ALL CONCRETE PIPE WILL CONFORM TO AASHTO M170
RUBBER GASKETS WILL CONFORM TO ASTM-C443

U.S. DEPARTMENT OF TRANSPORTATION
FEDERAL HIGHWAY ADMINISTRATION
EASTERN FEDERAL LANDS HIGHWAY DIVISION
STERLING, VIRGINIA

FORT BELVOIR - MULLIGAN ROAD

PIPE CULVERT PLACEMENT SUMMARY

6/18/2008 3:46:51 PM C:\PWworking\PITT\dms60567\Pipe_Culvert_Sum.dgn

REG	STATE	PROJECT	SHEET NO.
-	VA	VA-A-AD-48(1)	C11

Structure No.	Structure No.	PAY ITEM 60201-0500 15-INCH PIPE CULVERT	PAY ITEM 60201-0600 18-INCH PIPE CULVERT	PAY ITEM 60201-0800 24-INCH PIPE CULVERT	PAY ITEM 60201-0900 30-INCH PIPE CULVERT	PAY ITEM 60201-1300 54-INCH PIPE CULVERT	PAY ITEM 60202-0200 18-INCH EQUIVALENT DIAMETER ARCH OR ELLIPTICAL PIPE CULVERT	PAY ITEM 60202-0400 24-INCH EQUIVALENT DIAMETER ARCH OR ELLIPTICAL PIPE CULVERT	PAY ITEM 60202-0500 30-INCH EQUIVALENT DIAMETER ARCH OR ELLIPTICAL PIPE CULVERT	PAY ITEM 60202-0700 42-INCH EQUIVALENT DIAMETER ARCH OR ELLIPTICAL PIPE CULVERT	PAY ITEM 60202-0800 END SECTION FOR 24 INCH PIPE CULVERT	PAY ITEM 60103-0080 CONCRETE HEADWALL FOR 15 INCH PIPE CULVERT	PAY ITEM 60103-0100 CONCRETE HEADWALL FOR 18 INCH PIPE CULVERT	PAY ITEM 60103-0140 CONCRETE HEADWALL FOR 24 INCH PIPE CULVERT	PAY ITEM 60103-0160 CONCRETE HEADWALL FOR 30 INCH PIPE CULVERT	PAY ITEM 60103-1980 CONCRETE HEADWALL FOR 42 INCH EQUIVALENT DIAMETER PIPE CULVERT	PAY ITEM 60103-1320 CONCRETE HEADWALL FOR 54 INCH PIPE CULVERT	PAY ITEM 60103-2540 CONCRETE HEADWALL FOR 6 INCH UNDERDRAIN
		LNFT	LNFT	LNFT	LNFT	LNFT	LNFT	LNFT	LNFT	LNFT	(EACH)	(EACH)	(EACH)	(EACH)	(EACH)	(EACH)	(EACH)	(EACH)
D8-12	To D8-3	16																
D8-10	To D8-11			48									1					
D9-1	To D9-2	16																
D9-2	To D9-3	71																
D9-3	To D10-2	285																
D10-1	To D10-2	40																
D10-2	To D10-7	97																
D10-3	To D10-4	40																
D10-4	To D10-6		238															
D10-5	To D10-6	40																
D10-6	To D11-2		148															
D10-7	To D10-4	142																
D10-8	To D10-7	4																
D11-1	To D11-4				293													
D11-2	To D11-1				40													
D11-3	To D11-7				53										1			
D11-4	To D11-3				40													
D11-5	To D11-6	42																
D11-6	To D11-3		67															
D11-8	To D11-9	42																
D11-9	To D11-6		51															
D11-11	To D11-12		80										1					
D12-1	To D12-6	40										1						
D12-2	To D12-1	212																
D12-3	To D12-2	41																
D12-4	To D12-1	120																
D12-5	To D12-4	73																
D12-8	To D12-9									112						2.00		
D12-10	To D12-5	33																
D12-13	To D13-3	88																
D13-1	To D13-2					139											2.00	
D13-3	To D13-4	61										1						
D13-5	To D13-6	18										1						
D14-1	To D14-2	41										1						
		4926	1480	305	426	265	205	88	54	112	1	7	3	1	1	2	4	3
	Frac. Pip	615.75	185	38.125	53.25	33.125	25.625	11	6.75	14								
	Total # Pipes	616	185	39	54	33	26	11	7	14								
	Total Length Pipes	4928	1480	312	432	264	208	88	56	112								
	AS REQ	72	20	38	18	36	42	12	4	18								
	USE	5000	1500	350	450	300	250	100	60	130								

ALLOWABLE PIPE TYPES (UNLESS OTHERWISE SHOWN ON PLANS)

LOCATION	CONCRETE	ALUMINUM COATED TYPE 2 CORRUGATED STEEL	ALUMINUM COATED TYPE 2 CORRUGATED STEEL FULLY ASPHALT COATED	GALVANIZED CORRUGATED STEEL FULLY ASPHALT COATED WITH PAVED INVERT	GALVANIZED STEEL STRUCTURAL PLATE FULLY ASPHALT COATED WITH PAVED INVERT	GALVANIZED STEEL STRUCTURAL PLATE FULLY ASPHALT COATED	POLYMER COATED (10/10) CORRUGATED STEEL	UNCOATED GALVANIZED CORRUGATED STEEL	CORRUGATED ALUMINUM ALLOY CULVERTS & STRUCTURAL PLATE	PVC STORM DRAIN PIPE (SMOOTH INTERIOR)	POLYETHYLENE DOUBLE WALL TYPE S AND TYPE D	POLYETHYLENE CORRUGATED TYPE C
MULLIGAN ROAD	X											
STORM DRAIN SYSTEMS	X											

NOTE: ALL CONCRETE PIPE WILL CONFORM TO AASHTO M170
RUBBER GASKETS WILL CONFORM TO ASTM-C443

U.S. DEPARTMENT OF TRANSPORTATION
FEDERAL HIGHWAY ADMINISTRATION
EASTERN FEDERAL LANDS HIGHWAY DIVISION
STERLING, VIRGINIA

FORT BELVOIR - MULLIGAN ROAD

PIPE CULVERT PLACEMENT SUMMARY

6/18/2008 3:47:46 PM C:\PWworking\PITT\dms60567\Pipe_Culvert_Sum.dgn

MULLIGAN ROAD

TERMINATING STRUCTURE	60501-0000 STANDARD UNDERDRAIN SYSTEM (VDOT UD-1)	60501-0000 STANDARD UNDERDRAIN SYSTEM (VDOT UD-2)	60501-0000 STANDARD UNDERDRAIN SYSTEM (VDOT UD-4)	60501-0000 STANDARD UNDERDRAIN SYSTEM (VDOT CD-1)	60501-0000 STANDARD UNDERDRAIN SYSTEM (VDOT CD-2)
	LNFT	LNFT	LNFT	LNFT	LNFT
SWM 1				101	
D1-3	243	567	138		
D1-4	634				
D2-1	208				
D2-2	262	293			
D3-1	124	288			
D3-3	522	537			
D3-4			735		
D4-1			126		
D4-4			84		
D4-5			35		
D4-8		830	175		73
D5-2			242		
D5-3			234		
D5-4		163	234		
D5-5			436		
D5-6		459	437		
D6-1			542		
D6-2		202	170		74
D6-3		102			
ENDWALL (D7)		306			
D7-3		355	223		
D7-4			396		
D8-1			235		
D8-2			186		
D8-3			83		
D8-4		900	95		66
D8-8	838				
D9-3		439	415	62	
D10-2		315	282		
D10-4		259	136		
D10-6	240	256			
D10-7			92		
D11-1		149		31	
D11-2	138			31	
D11-3			277		
D11-4		300			
D11-6		152	107		42
D11-9		110	91		
ENDWALL (D12)					123
D12-1			203		
D12-2		42			
D12-3		422	112		
D12-4			220		
D12-5			25		
D12-10			46		
D12-13			562		
D13-3		398	512		
D13-5			124		
D14-1			222	77	
Subtotal	3,209	7,844	8,232	302	378
AS REQ	91	256	268	18	12
USE	3,300	8,100	8,500	320	390
	LNFT	LNFT	LNFT	LNFT	LNFT

U.S. DEPARTMENT OF TRANSPORTATION
FEDERAL HIGHWAY ADMINISTRATION
EASTERN FEDERAL LANDS HIGHWAY DIVISION
STERLING, VIRGINIA

FORT BELVOIR - MULLIGAN ROAD

UNDERDRAIN SUMMARY

REG	STATE	PROJECT	SHEET NO.
-	VA	VA-A-AD-48(1)	C12

REG	STATE	PROJECT	SHEET NO.
-	VA	VA-A-AD-48(1)	C13

Sign No.	Text No.	Text or Standard Number	LOCATION	PANEL SIZE W (in)	H (in)	Area (ft^2)	Corner Radii (in)	Border Width (in)	Margin Width (in)	NUMERALS,LETTERS Num. (in)	Upper Case (in)	Lower Case (in)	Series	Color Comb.	Quantity	Total Area ft^2	Support Wood ft	Steel ft	Remarks
1.	G20-2	END ROAD WORK	OLD MILL ROAD, MEERES ROAD, AND POLE ROAD (SEE SHT N1) TELEGRAPH ROAD (SEE SHT N3) (REFER TO STD. 635-6)	36	18	4.5	SEE NOTES BELOW							BLACK on ORANGE	6	27	100	---	5 DUAL POST 1 PORTABLE
2.	R11-2	ROAD CLOSED	CONSTRUCTION ENTRANCE (SEE SHT N1) KINGMAN ROAD (SEE SHT N2) CONSTRUCTION ENTRANCE (SEE SHT N3)	48	30	10	SEE NOTES BELOW							BLACK on WHITE	2	20	---	---	MOUNTED ON TYPE III BARRICADE AND TEMPORARY FENCE
3	W8-6	TRUCK CROSSING	MEERES ROAD AND POLE ROAD (SEE SHT N1)	36	36	9	SEE NOTES BELOW							BLACK on ORANGE	2	18	20	---	SINGLE POST
4.	W13-1	35 MPH	OLD MILL ROAD, MEERS ROAD, POLE ROAD, AND TELEGRAPH ROAD (REFER TO STD 635-6)	24	24	4	SEE NOTES BELOW							BLACK on ORANGE	5	20	---	---	ATTACHED BELOW "ONE LANE ROAD AHEAD" SIGN
5.	W16-2	500 FEET	OLD MILL ROAD, MEERS ROAD, POLE ROAD, AND TELEGRAPH ROAD (REFER TO STD 635-6)	24	18	3	SEE NOTES BELOW							BLACK on ORANGE	5	15	---	---	ATTACHED BELOW FLAGGER SYMBOL SIGN
														SHEET TOTAL		100	120	---	

Notes:

1. Stake sign locations for review by the CO.
2. Construct and erect signs in accordance with the "Manual on Uniform Traffic Control Devices" (MUTCD), current edition.

U.S. DEPARTMENT OF TRANSPORTATION
FEDERAL HIGHWAY ADMINISTRATION
EASTERN FEDERAL LANDS HIGHWAY DIVISION
STERLING, VIRGINIA

FORT BELVOIR - MULLIGAN ROAD

CONSTRUCTION SIGN SCHEDULE

Sheet 1 of 2

6/19/2008 1:34:55 PM C:\PWworking\PITT\dms6056\CONST SIGN SCHEDULE.dgn

REG	STATE	PROJECT	SHEET NO.
-	VA	VA-A-AD-48(1)	C14

Sign No.	Text No.	Text or Standard Number	LOCATION	PANEL SIZE W (in)	H (in)	Area (ft^2)	Corner Radii (in)	Border Width (in)	Margin Width (in)	NUMERALS,LETTERS Num. (in)	Upper Case (in)	Lower Case (in)	Series	Color Comb.	Quantity	Total Area ft^2	Support Wood ft	Steel ft	Remarks
6.	W20-1		OLD MILL ROAD, MEERES ROAD, AND POLE ROAD (SEE SHT N1) TELEGRAPH ROAD (SEE SHT N3) (REFER TO STD. 635-6)	36	36	9	SEE NOTES BELOW							BLACK on ORANGE	9	81	70	---	7 SINGLE POST 2 PORTABLE
7.	W20-3		KINGMAN ROAD (SEE SHT N2)	36	36	9	SEE NOTES BELOW							BLACK on ORANGE	2	18	20	---	SINGLE POST
8.	W20-4		OLD MILL ROAD, MEERS ROAD, POLE ROAD, AND TELEGRAPH ROAD (REFER TO STD 635-6)	36	36	9	SEE NOTES BELOW							BLACK on ORANGE	2	18	---	---	2 PORTABLE
9.	W20-7a		OLD MILL ROAD, MEERS ROAD, POLE ROAD, AND TELEGRAPH ROAD (REFER TO STD 635-6)	36	36	9	SEE NOTES BELOW							BLACK on ORANGE	2	18	---	---	2 PORTABLE
10.	SPECIAL		OLD MILL ROAD, MEERES ROAD, AND POLE ROAD (SEE SHT N1) TELEGRAPH ROAD (SEE SHT N3)	36	36	9	SEE NOTES BELOW							BLACK on ORANGE	5	45	50	---	SINGLE POST
														SHEET TOTAL		180	120	---	
														PREV. SHEET TOTAL		100	140		
														AS REQUIRED		20	---	---	
														GRAND TOTAL		300	260	---	

Notes:

1. Stake sign locations for review by the CO.
2. Construct and erect signs in accordance with the "Manual on Uniform Traffic Control Devices" (MUTCD), current edition.

U.S. DEPARTMENT OF TRANSPORTATION
FEDERAL HIGHWAY ADMINISTRATION
EASTERN FEDERAL LANDS HIGHWAY DIVISION
STERLING, VIRGINIA

FORT BELVOIR - MULLIGAN ROAD

CONSTRUCTION SIGN SCHEDULE

Sheet 2 of 2

6/19/2008 1:36:25 PM C:\PWworking\PITT\dms60567\CONST SIGN SCHEDULE.dgn

REG	STATE	PROJECT	SHEET NO.
-	VA	VA-A-AD-48(1)	D1

NOTE: 1. Maintain Pedestrian and Bicycle Access at all times.

2. Verify the vertical depth of 24-inch waterline at the proposed 38"x24" HECP crossing at 149+90 by performing a test hole prior to pipe installation. Contact Fairfax Water (Bill Johnston, Supervisor Engineering Inspector, 703-289-6350) at least 14 calendar days prior to digging the test hole.

3. Provide a Minimum of 2 feet of cover over all waterlines during construction activities.

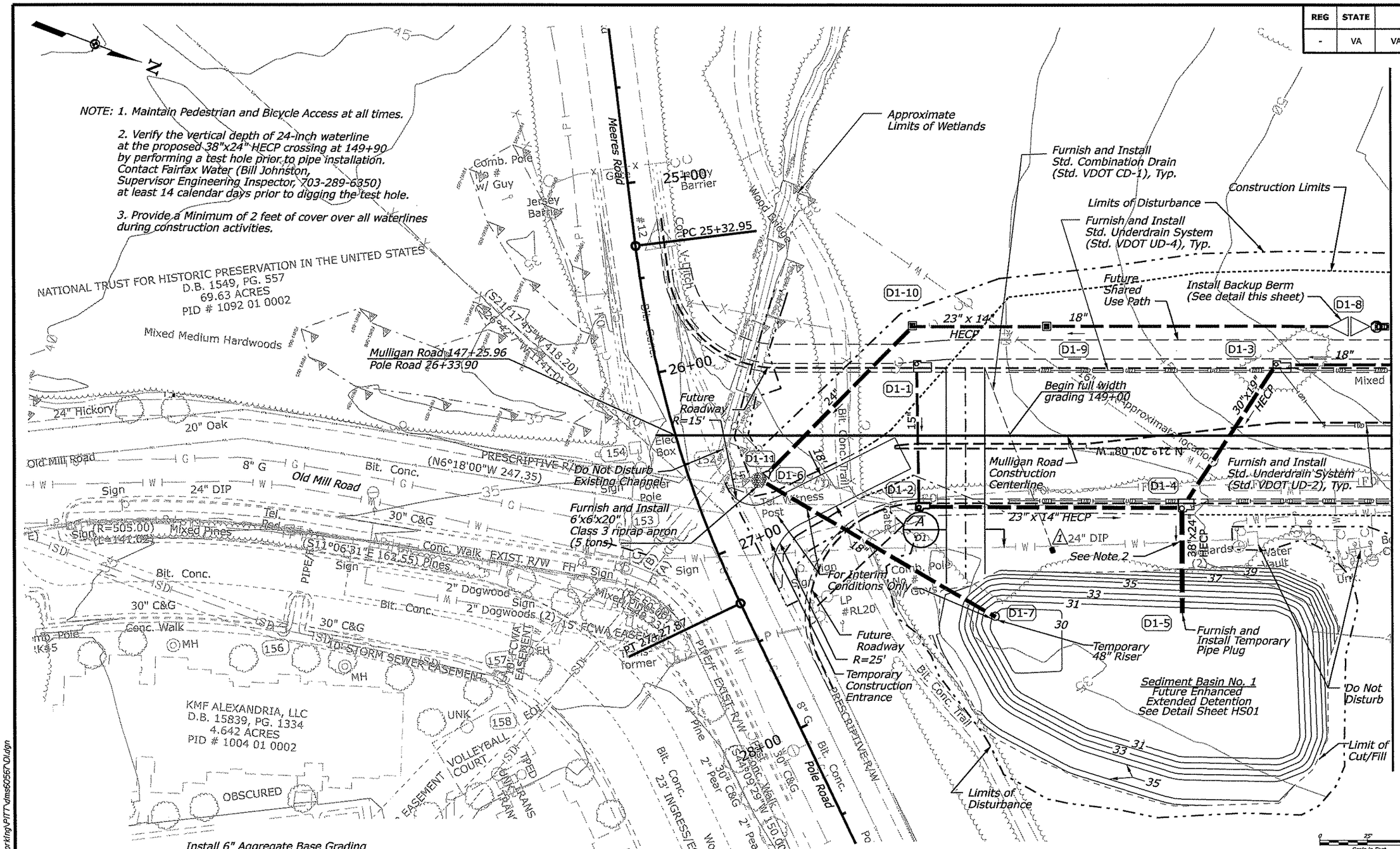

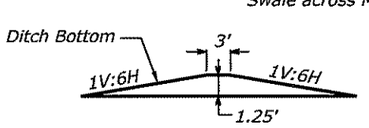

DETAIL BACKUP BERM
N.T.S.

Install 6" Aggregate Base Grading
AASHTO M-49, #3
Swale across Mulligan Road

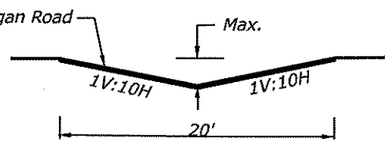

TYPICAL CHANNEL SECTION (A / D1)
N.T.S.

1 Furnish and Install Std. Underdrain System Endwall (Detail E601-C)

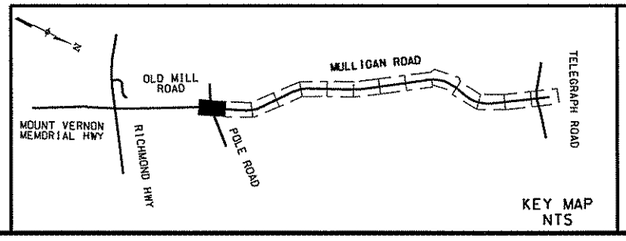

KEY MAP
NTS

U.S. DEPARTMENT OF TRANSPORTATION
FEDERAL HIGHWAY ADMINISTRATION
EASTERN FEDERAL LANDS HIGHWAY DIVISION
STERLING, VIRGINIA

FORT BELVOIR - MULLIGAN ROAD

CONSTRUCTION PLAN

Mulligan Road
147+25.96 to 151+00

Sheet 1 of 28

7/10/2008 12:43:07 PM C:\PWworking\PITT\dms6056r01.dgn

REG	STATE	PROJECT	SHEET NO.
-	VA	VA-A-AD-48(1)	D1A

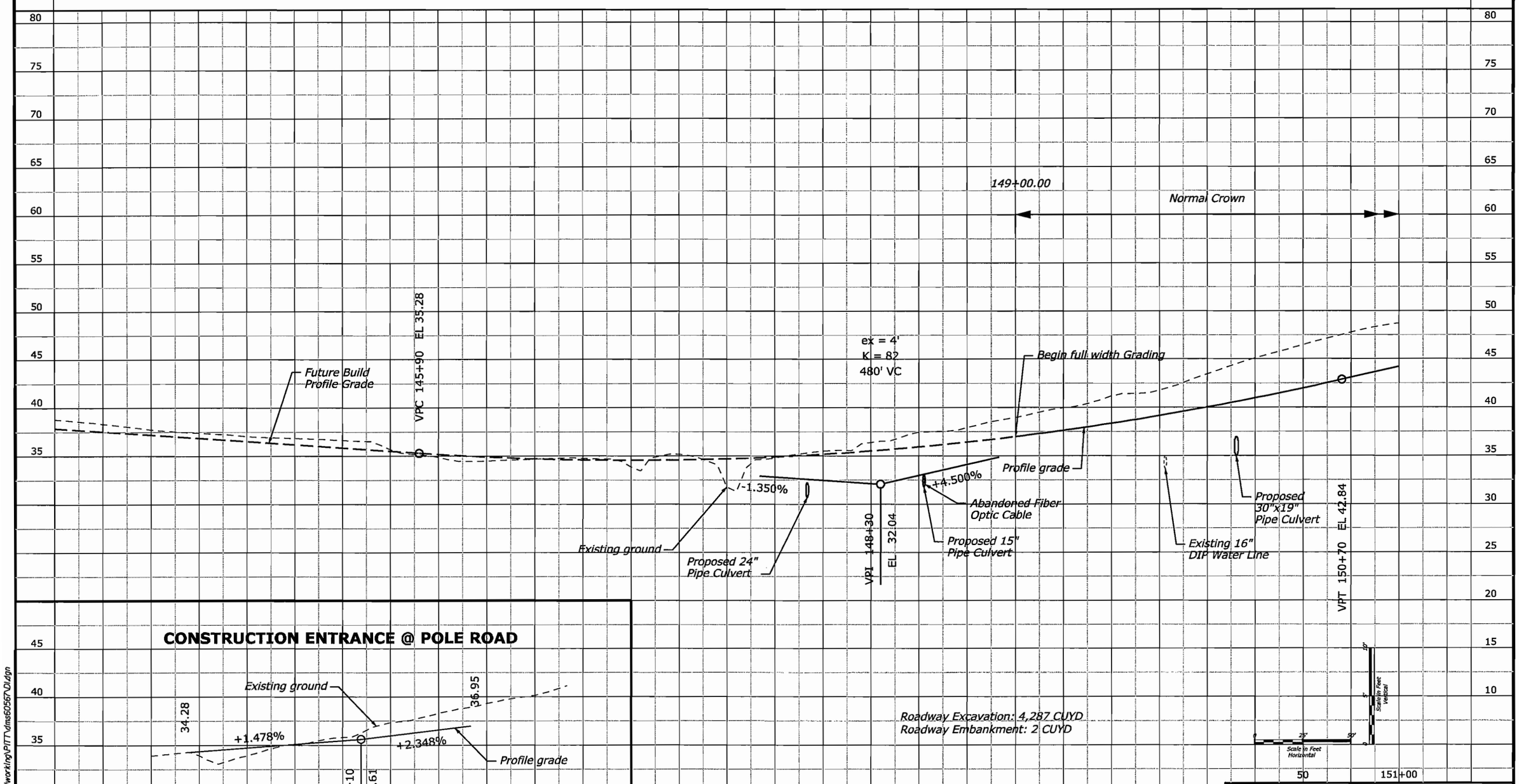

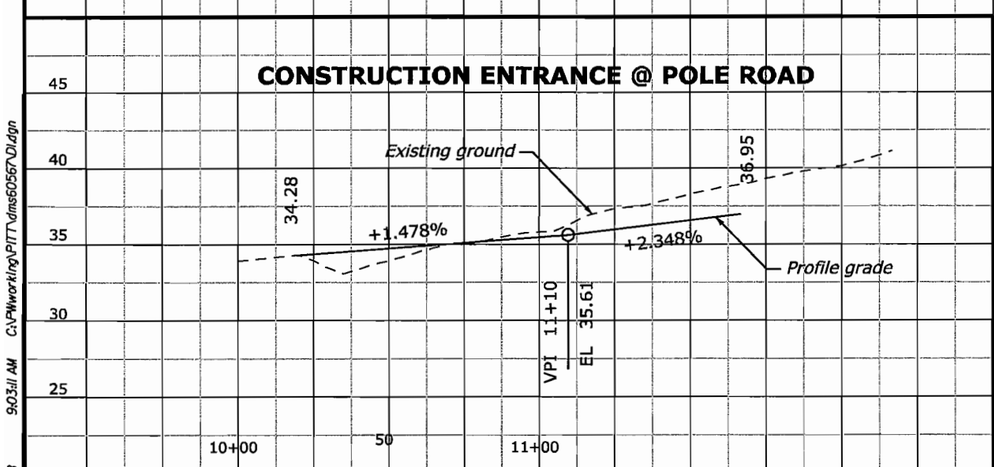

U.S. DEPARTMENT OF TRANSPORTATION
FEDERAL HIGHWAY ADMINISTRATION
EASTERN FEDERAL LANDS HIGHWAY DIVISION
STERLING, VIRGINIA

FORT BELVOIR - MULLIGAN ROAD

CONSTRUCTION PROFILE

Mulligan Road
147+25.96 to 151+00

Sheet 2 of 28

6/19/2008 9:03:11 AM C:\PWworking\PITT\dms50567\D1.dgn

REG	STATE	PROJECT	SHEET NO.
-	VA	VA-A-AD-48(1)	D2

Matchline 151+00

Matchline 158+00

Construction Limits

Limits of Disturbance

Furnish and Install Std. Underdrain System (Std. VDOT UD-1), Typ.

Future Shared Use Path

Relocate by Others

18"

15"

Furnish and Install Std. Underdrain System (Std. VDOT UD-2), Typ.

D2-1

D2-2

D2-3

152+00

153+00

154+00

155+00

156+00

157+00

Mulligan Road

Utility Pole No. #

Furnish and Install Std. Underdrain System (Std. VDOT UD-4), Typ.

24" DIP

Mulligan Road Construction Centerline

TS 155+03.60

SC 156+38.60

Limits of Disturbance

Future Roadway

Construction Limits

Spiral = CRBSC4B
PI 155+93.63
θs = 4° 04' 16"
Ls = 135.00'

0 25' 50'
Scale in Feet

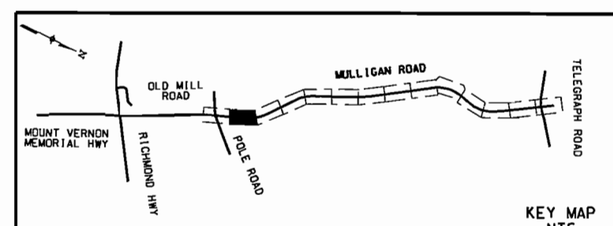

KEY MAP
NTS

U.S. DEPARTMENT OF TRANSPORTATION
FEDERAL HIGHWAY ADMINISTRATION
EASTERN FEDERAL LANDS HIGHWAY DIVISION
STERLING, VIRGINIA

FORT BELVOIR - MULLIGAN ROAD

CONSTRUCTION PLAN

Mulligan Road
151+00 to 158+00

6/10/2008 8:25:21 AM c:\pwworking\pltf\dms50567\D2.dgn

REG	STATE	PROJECT	SHEET NO.
-	VA	VA-A-AD-48(1)	D2A

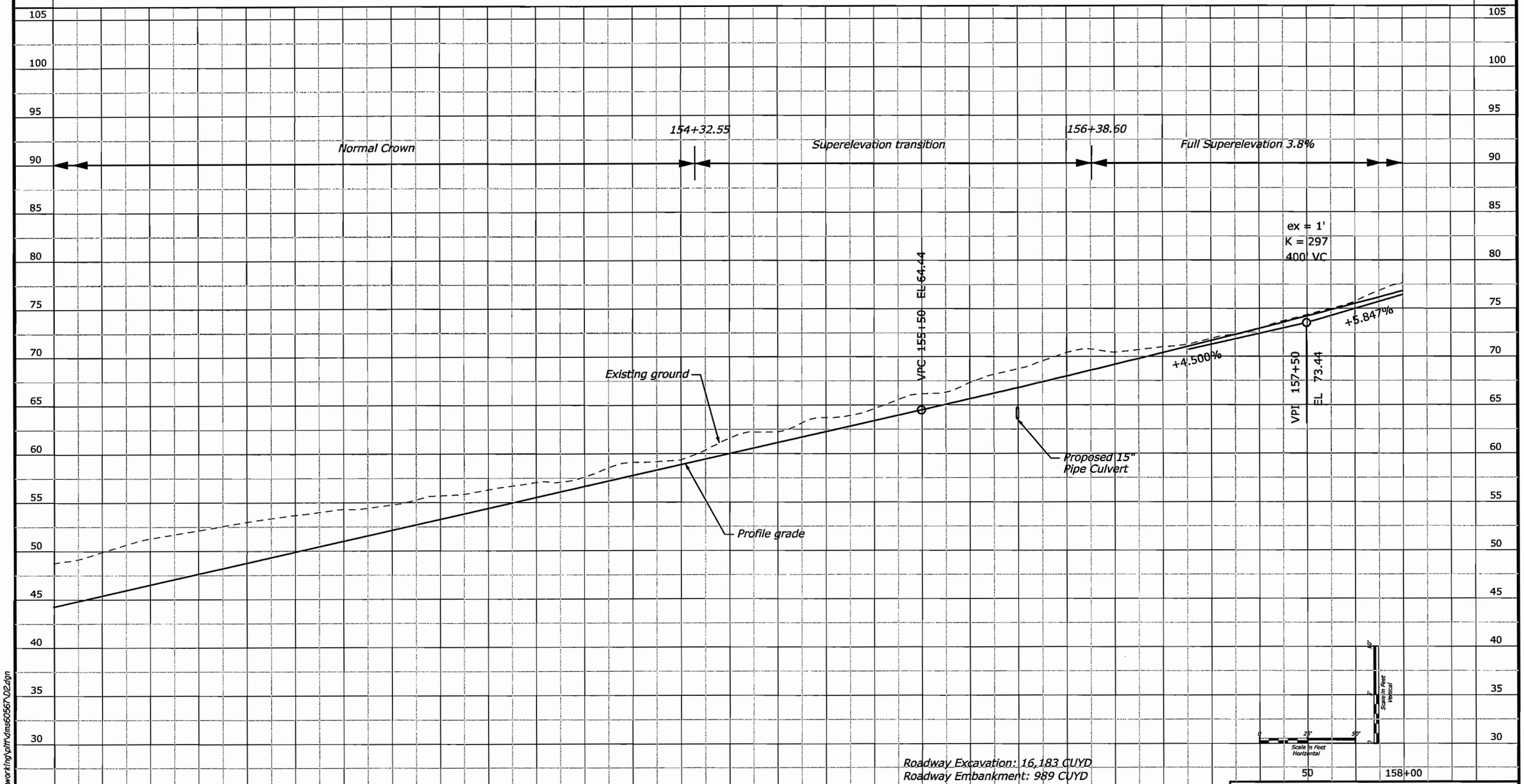

U.S. DEPARTMENT OF TRANSPORTATION
FEDERAL HIGHWAY ADMINISTRATION
EASTERN FEDERAL LANDS HIGHWAY DIVISION
STERLING, VIRGINIA

FORT BELVOIR - MULLIGAN ROAD

CONSTRUCTION PROFILE

Mulligan Road
151+00 to 158+00

6/10/2008 8:25:34 AM c:\pwworking\olthdms50567\D2.dgn

REG	STATE	PROJECT	SHEET NO.
-	VA	VA-A-AD-48(1)	D3

N

Dirt & Gravel Road

Limits of Disturbance

Construction Limits

Furnish and Install Std. Underdrain System (Std. VDOT UD-1), Typ.

Future Shared Use Path

Furnish and Install Std. Underdrain System (Std. VDOT UD-1), Typ.

Furnish and Install Std. Underdrain System (Std. VDOT UD-2), Typ.

Mulligan Road

Furnish and Install Std. Underdrain System (Std. VDOT UD-4), Typ.

Mulligan Road Construction Centerline

Matchline 158+00

Matchline 165+00

D3-1 D3-2 D3-3 D3-4

15" 15" 15" 15"

159+00 160+00 161+00 162+00 163+00 164+00

CS 160+10.15

ST 161+45.15

Construction Limits

Limits of Disturbance

Future Roadway

Curve = CRBSC4
PI 158+26.78
Δ= 30° 33' 02" (LT)
Δc = 22° 24' 31" (LT)
R = 950.00'
Ts = 327.16'
L = 371.55'

Spiral = CRBSC4A
PI 160+55.17
θs = 4° 04' 16"
Ls = 135.00'

24" DIP

0 25' 50'
Scale In Feet

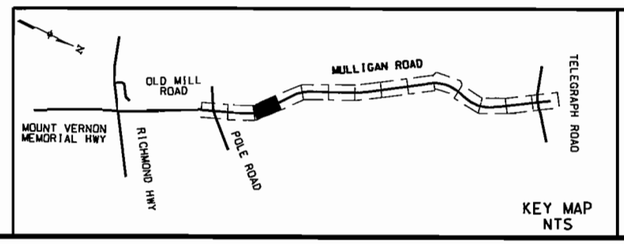

KEY MAP
NTS

U.S. DEPARTMENT OF TRANSPORTATION
FEDERAL HIGHWAY ADMINISTRATION
EASTERN FEDERAL LANDS HIGHWAY DIVISION
STERLING, VIRGINIA

FORT BELVOIR - MULLIGAN ROAD

CONSTRUCTION PLAN

Mulligan Road
158+00 to 165+00

6/10/2008 8:26:43 AM c:\pwworking\plthdms60567\D3.dgn

REG	STATE	PROJECT	SHEET NO.
-	VA	VA-A-AD-48(1)	D3A

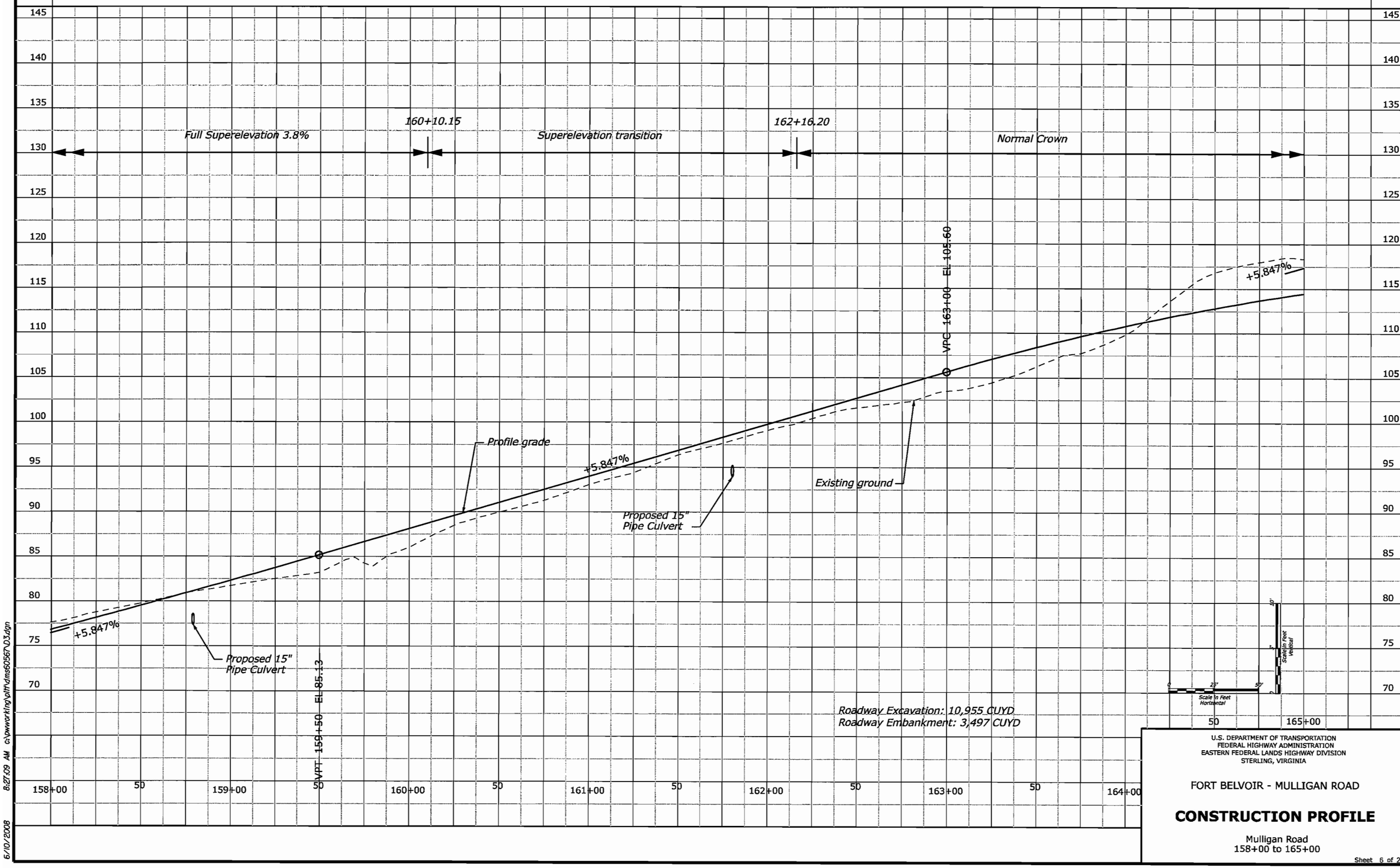

U.S. DEPARTMENT OF TRANSPORTATION
FEDERAL HIGHWAY ADMINISTRATION
EASTERN FEDERAL LANDS HIGHWAY DIVISION
STERLING, VIRGINIA

FORT BELVOIR - MULLIGAN ROAD

CONSTRUCTION PROFILE

Mulligan Road
158+00 to 165+00

6/10/2008 8:27:09 AM c:\pwworking\pth\dms60567\D3.dgn

REG	STATE	PROJECT	SHEET NO.
-	VA	VA-A-AD-48(1)	D4

Future Shared Use Path

Furnish and Install Std. Underdrain System (Std. VDOT UD-1), Typ.

Construction Limits

Furnish and Install Std. Underdrain System (Std. VDOT UD-4), Typ.

Dirt & Gravel Road

12' Wide x 10' Rise Wildlife Crossing See Detail E602-A and E602-B

Limits of Disturbance

Furnish and Install Std. Combination Drain (Std. VDOT CD-2)

Matchline 165+00

Matchline 172+00

Mulligan Road

N 51° 53' 10" W.

Furnish and Install Std. Underdrain System (Std. VDOT UD-2), Typ.

Mulligan Road Construction Centerline

SWM #2 Road 10+00.00

Mulligan Road 171+00.00

Install 12'x7'x20" Class 3 riprap apron (10.4 tons)

Top of Cut 1V:2H Cut Slope

Construction Limits

Future Roadway

Limits of Disturbance

Furnish and Install Std. Underdrain System (Std. VDOT UD-4), Typ.

Furnish and Install Std. Combination Drain (Std. VDOT CD-1), Typ.

Install 10'x10'x32" Class 4 riprap apron (19 tons)

Install Temporary plastic fence (Tree protection fence)

12 LF 2'x3' gabions

Forebay 77 LF 3'x3' gabions

Micro Pool 91.5

Low marsh 92.5

High marsh 93.5

SWM Basin #2 Extended detention enhanced

SWM Basin #2 Access Road

Furnish and Install Std. Underdrain System (Std. VDOT UD-4), Typ.

Toe of Fill

D4-1 D4-2 D4-3 D4-4 D4-5 D4-6 D4-7 D4-8 D4-9 D4-10 D4-11 D4-12

TS 168+80.08

TS 170+15.08

166+00 167+00 168+00 169+00 170+00 171+00 10+00 11+00 12+00 13+00

R=25' R=15'

Spiral = CRBSC5B
PI 169+70.11
θs = 4° 04' 16"
Ls = 135.00'

Curve = CRBSC5
PI 171+76.20
Δ = 27° 23' 35" (RT)
Δc = 19° 15' 03" (RT)
R = 950.00'
Ts = 299.21'
L = 319.19'

0 25' 50'
Scale In Feet

TYPICAL CHANNEL SECTION N.T.S.

1V:2H 16" 1' 1V:2H GEOTEXTILE FABRIC CLASS 2 RIPRAP (16 tons) 2'

A D4

KEY MAP NTS

MULLIGAN ROAD OLD MILL ROAD MOUNT VERNON MEMORIAL HWY RICHMOND HWY POLE ROAD TELEGRAPH ROAD

U.S. DEPARTMENT OF TRANSPORTATION
FEDERAL HIGHWAY ADMINISTRATION
EASTERN FEDERAL LANDS HIGHWAY DIVISION
STERLING, VIRGINIA

FORT BELVOIR - MULLIGAN ROAD

CONSTRUCTION PLAN

Mulligan Road
165+00 to 172+00

6/18/2008 1:51:50 PM c:\pwworking\pth\dms60567\D4.dgn

REG	STATE	PROJECT	SHEET NO.
-	VA	VA-A-AD-48(1)	D4A

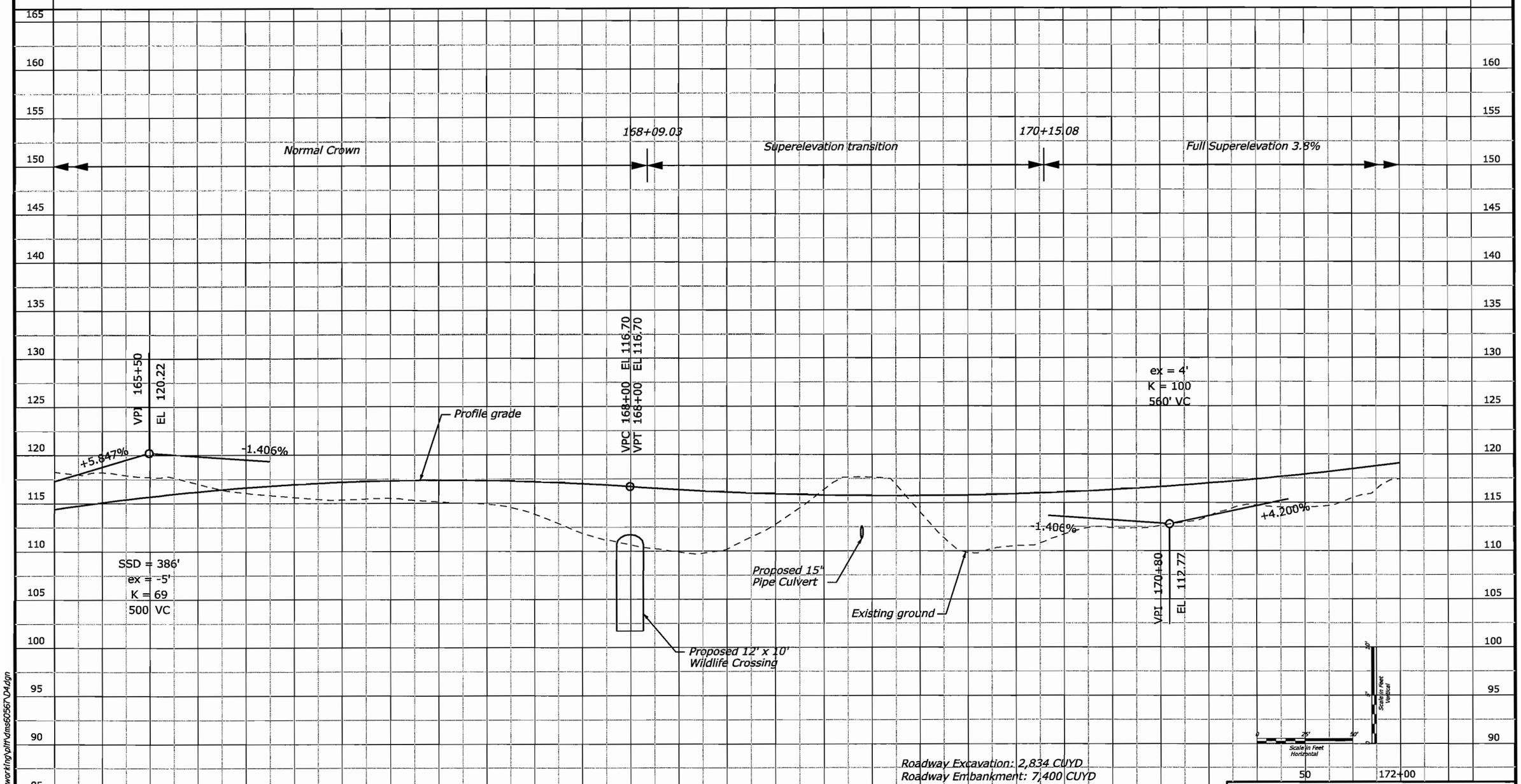

U.S. DEPARTMENT OF TRANSPORTATION
FEDERAL HIGHWAY ADMINISTRATION
EASTERN FEDERAL LANDS HIGHWAY DIVISION
STERLING, VIRGINIA

FORT BELVOIR - MULLIGAN ROAD

CONSTRUCTION PROFILE

Mulligan Road
165+00 to 172+00

6/10/2008 8:31:04 AM c:\pwworking\plth\dms60567\D4.dgn

REG	STATE	PROJECT	SHEET NO.
-	VA	VA-A-AD-48(1)	D5

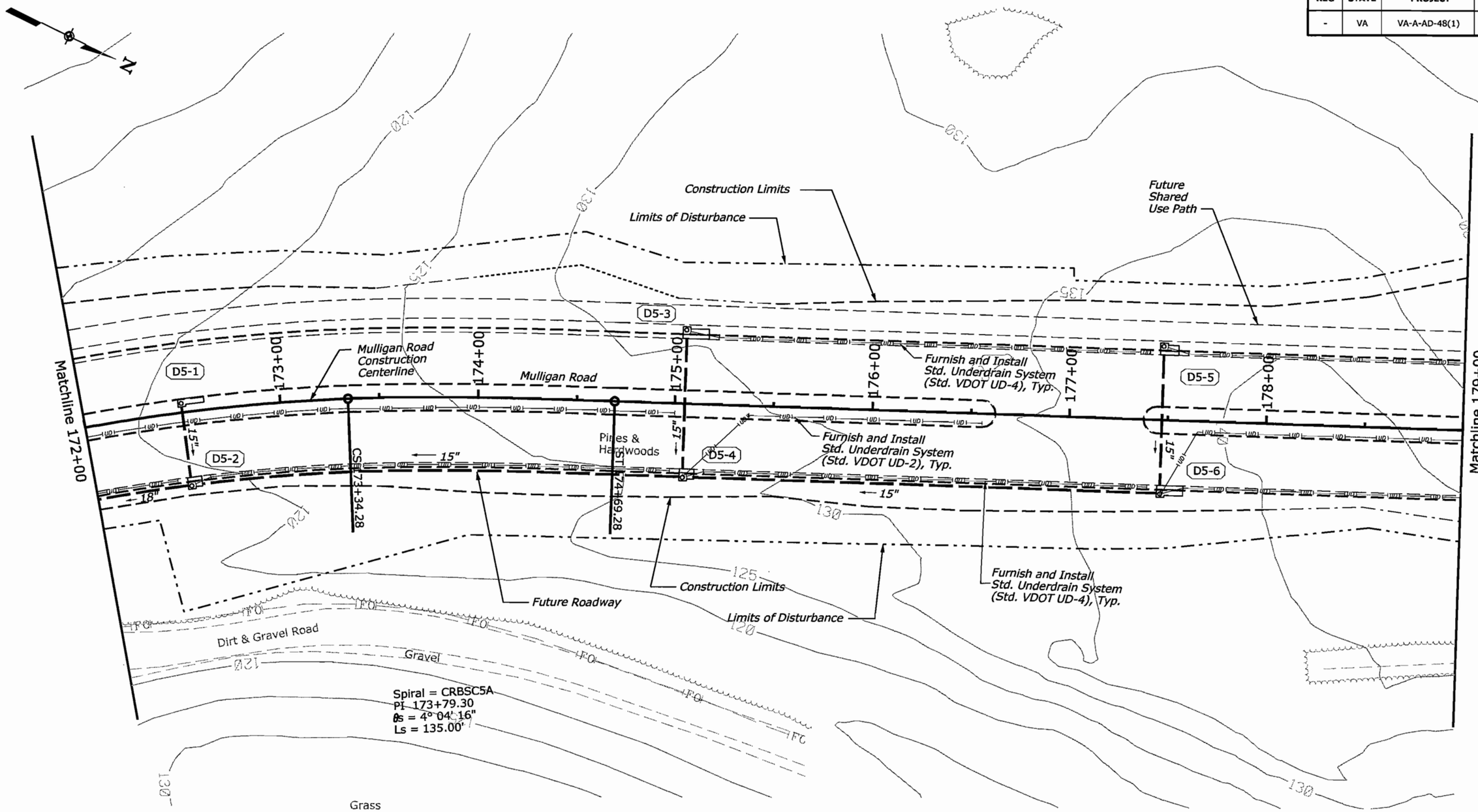

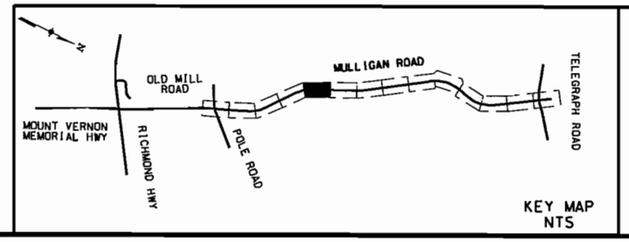

U.S. DEPARTMENT OF TRANSPORTATION
FEDERAL HIGHWAY ADMINISTRATION
EASTERN FEDERAL LANDS HIGHWAY DIVISION
STERLING, VIRGINIA

FORT BELVOIR - MULLIGAN ROAD

CONSTRUCTION PLAN

Mulligan Road
172+00 to 179+00

6/18/2008 1:54:24 PM g:\pwworking\vdth\dms60567\D5.dgn

REG	STATE	PROJECT	SHEET NO.
-	VA	VA-A-AD-48(1)	D5A

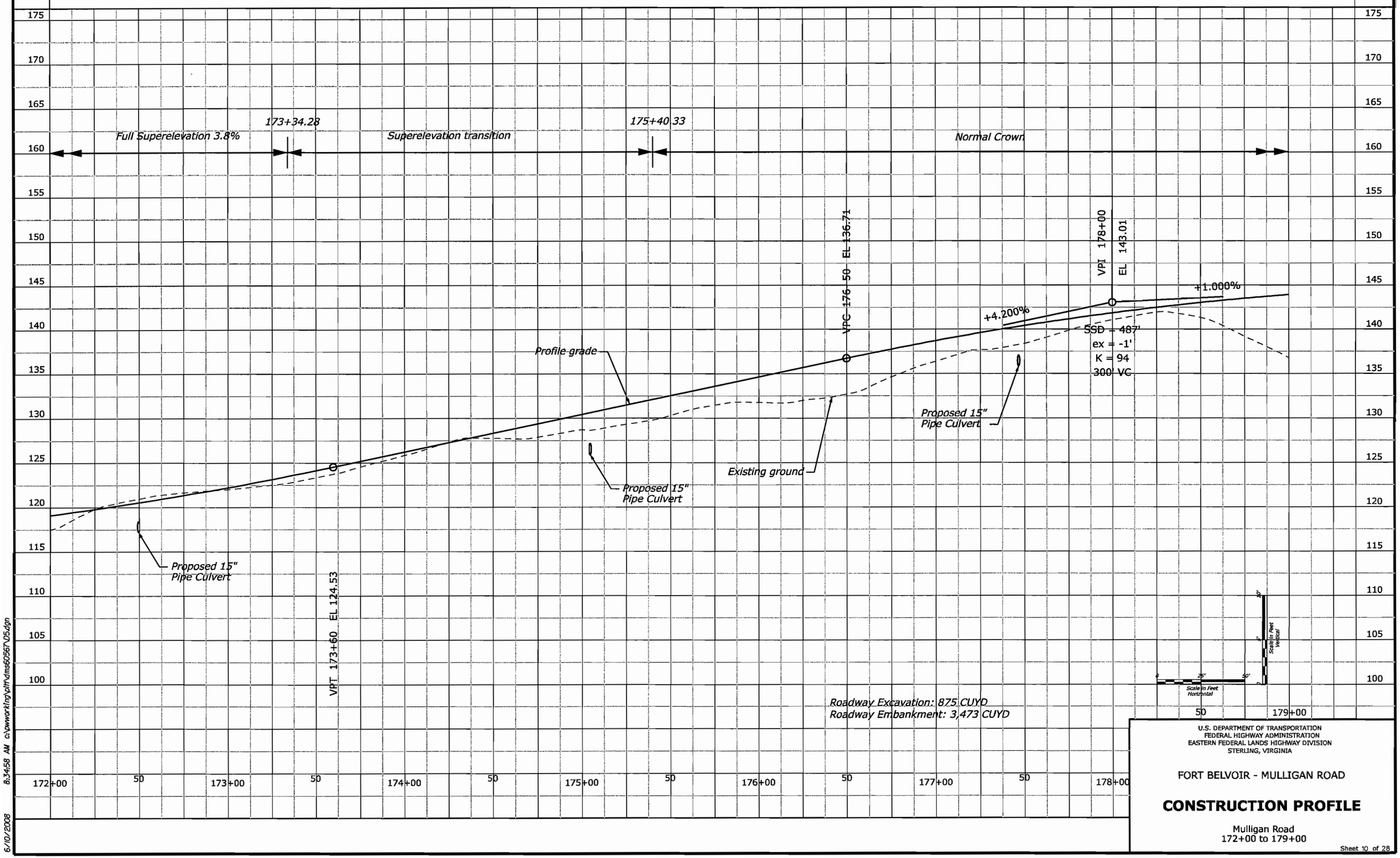

U.S. DEPARTMENT OF TRANSPORTATION
FEDERAL HIGHWAY ADMINISTRATION
EASTERN FEDERAL LANDS HIGHWAY DIVISION
STERLING, VIRGINIA

FORT BELVOIR - MULLIGAN ROAD

CONSTRUCTION PROFILE

Mulligan Road
172+00 to 179+00

6/10/2008 8:34:58 AM c:\wwworking\pltn\dms60567\D5.dgn

REG	STATE	PROJECT	SHEET NO.
-	VA	VA-A-AD-48(1)	D6

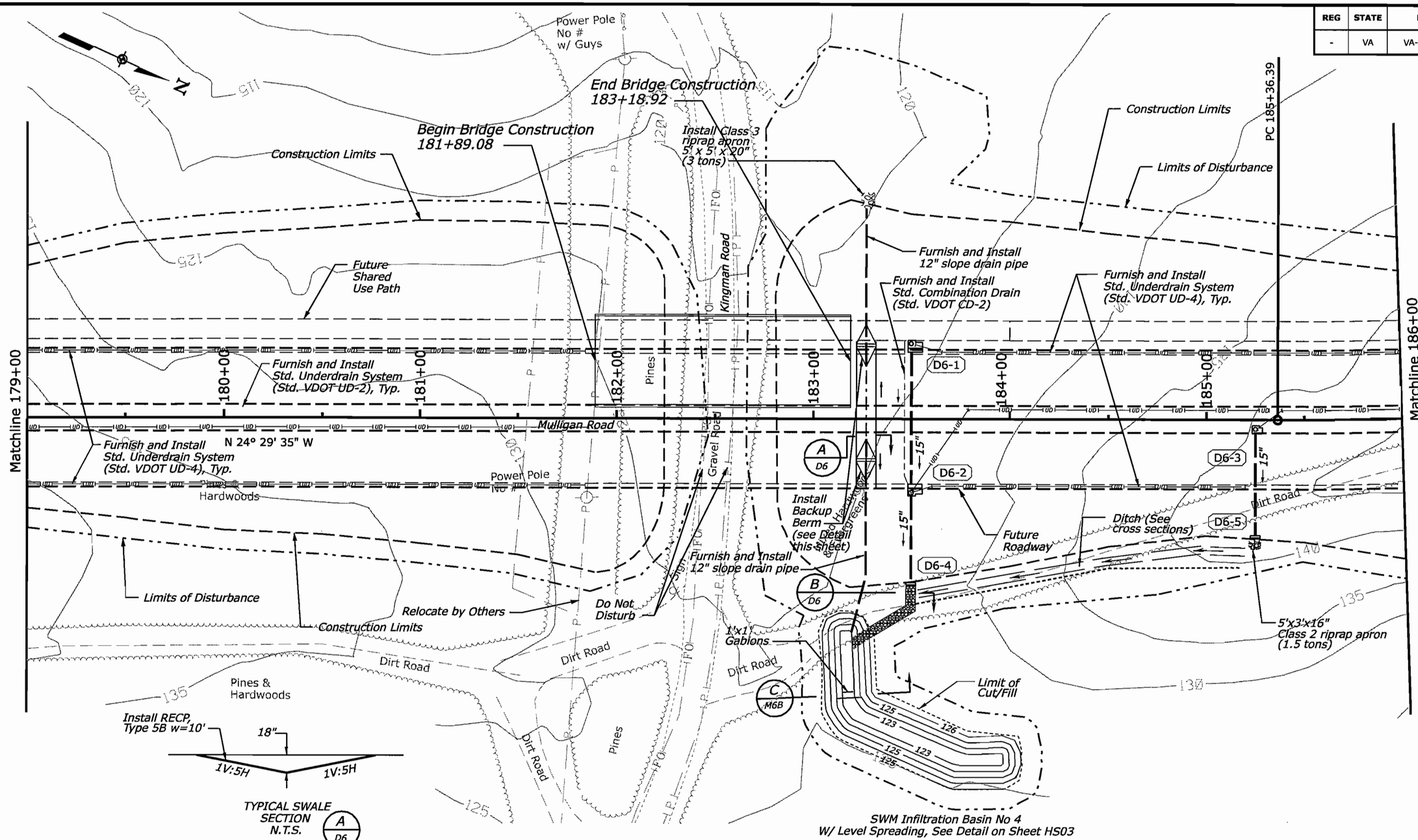

TYPICAL SWALE SECTION N.T.S. (A / D6)

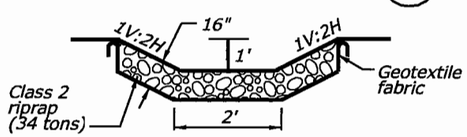

TYPICAL CHANNEL SECTION N.T.S. (B / D6)

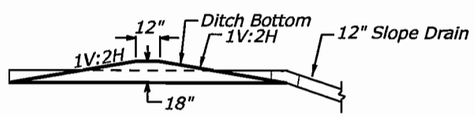

DETAIL BACKUP BERM N.T.S.

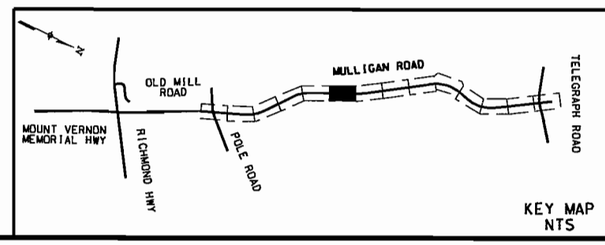

KEY MAP NTS

0 25' 50'
Scale In Feet

U.S. DEPARTMENT OF TRANSPORTATION
FEDERAL HIGHWAY ADMINISTRATION
EASTERN FEDERAL LANDS HIGHWAY DIVISION
STERLING, VIRGINIA

FORT BELVOIR - MULLIGAN ROAD

CONSTRUCTION PLAN

Mulligan Road
179+00 to 186+00

Sheet 11 of 28

6/19/2008 2:24:43 PM C:\PWworking\PITT\dms60567\D6.dgn

REG	STATE	PROJECT	SHEET NO.
-	VA	VA-A-AD-48(1)	D6A

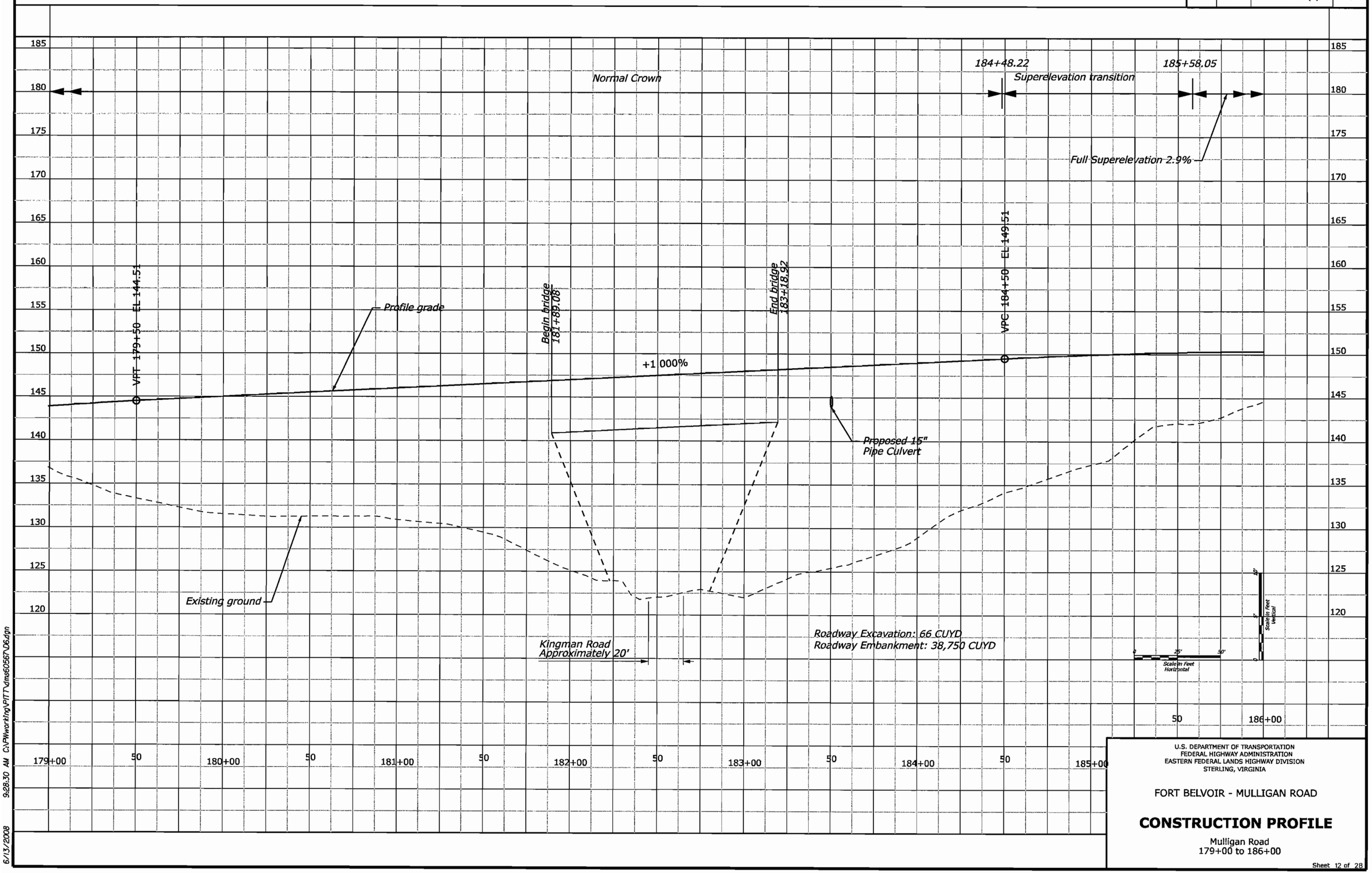

U.S. DEPARTMENT OF TRANSPORTATION
FEDERAL HIGHWAY ADMINISTRATION
EASTERN FEDERAL LANDS HIGHWAY DIVISION
STERLING, VIRGINIA

FORT BELVOIR - MULLIGAN ROAD

CONSTRUCTION PROFILE

Mulligan Road
179+00 to 186+00

6/13/2008 9:28:30 AM C:\PWworking\PITT\dms60567\D6.dgn

REG	STATE	PROJECT	SHEET NO.
-	VA	VA-A-AD-48(1)	D7

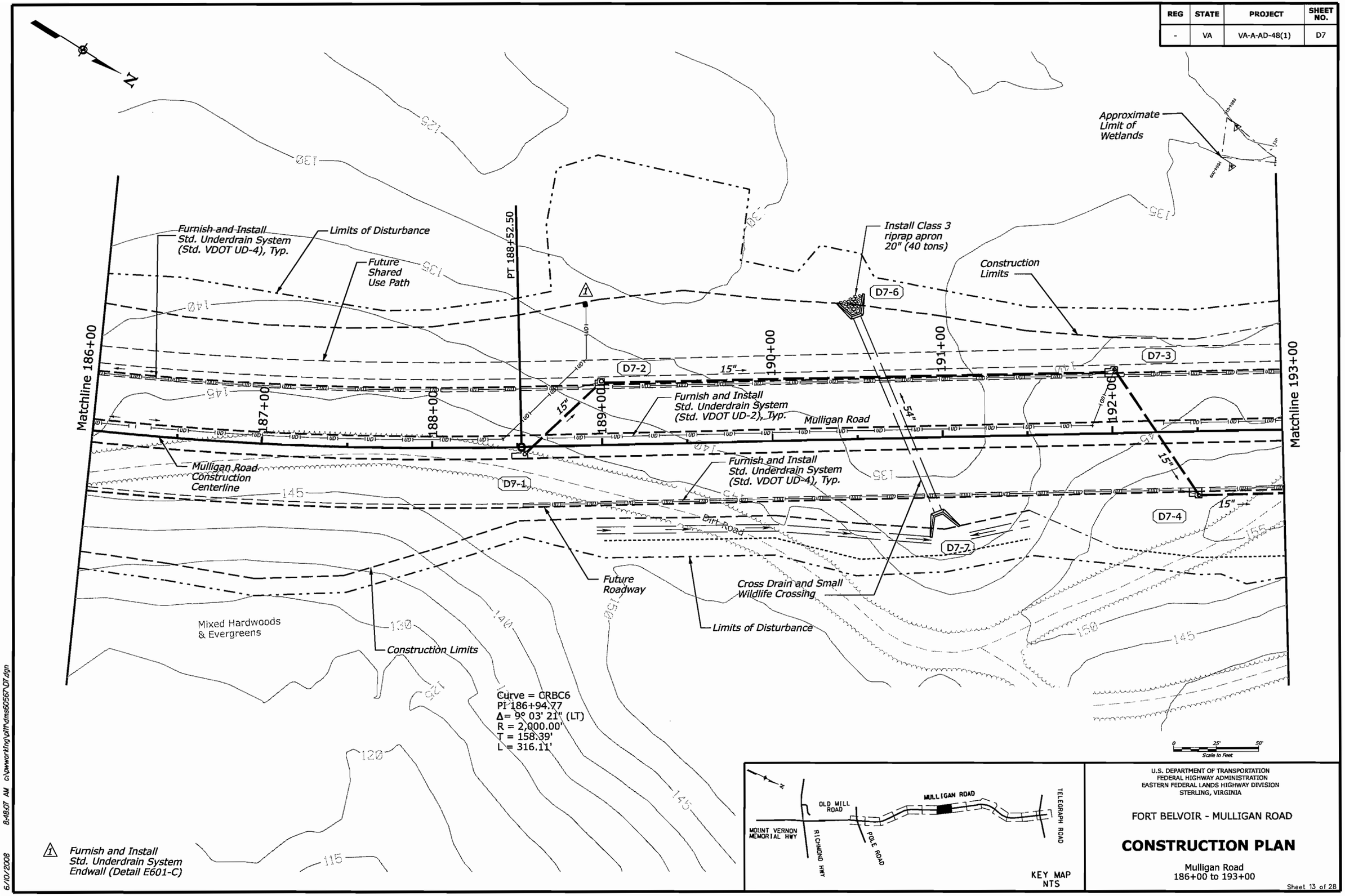

U.S. DEPARTMENT OF TRANSPORTATION
FEDERAL HIGHWAY ADMINISTRATION
EASTERN FEDERAL LANDS HIGHWAY DIVISION
STERLING, VIRGINIA

FORT BELVOIR - MULLIGAN ROAD

CONSTRUCTION PLAN

Mulligan Road
186+00 to 193+00

6/10/2008 8:48:07 AM c:\pwworking\pltfdms5056\D7.dgn

REG	STATE	PROJECT	SHEET NO.
-	VA	VA-A-AD-48(1)	D7A

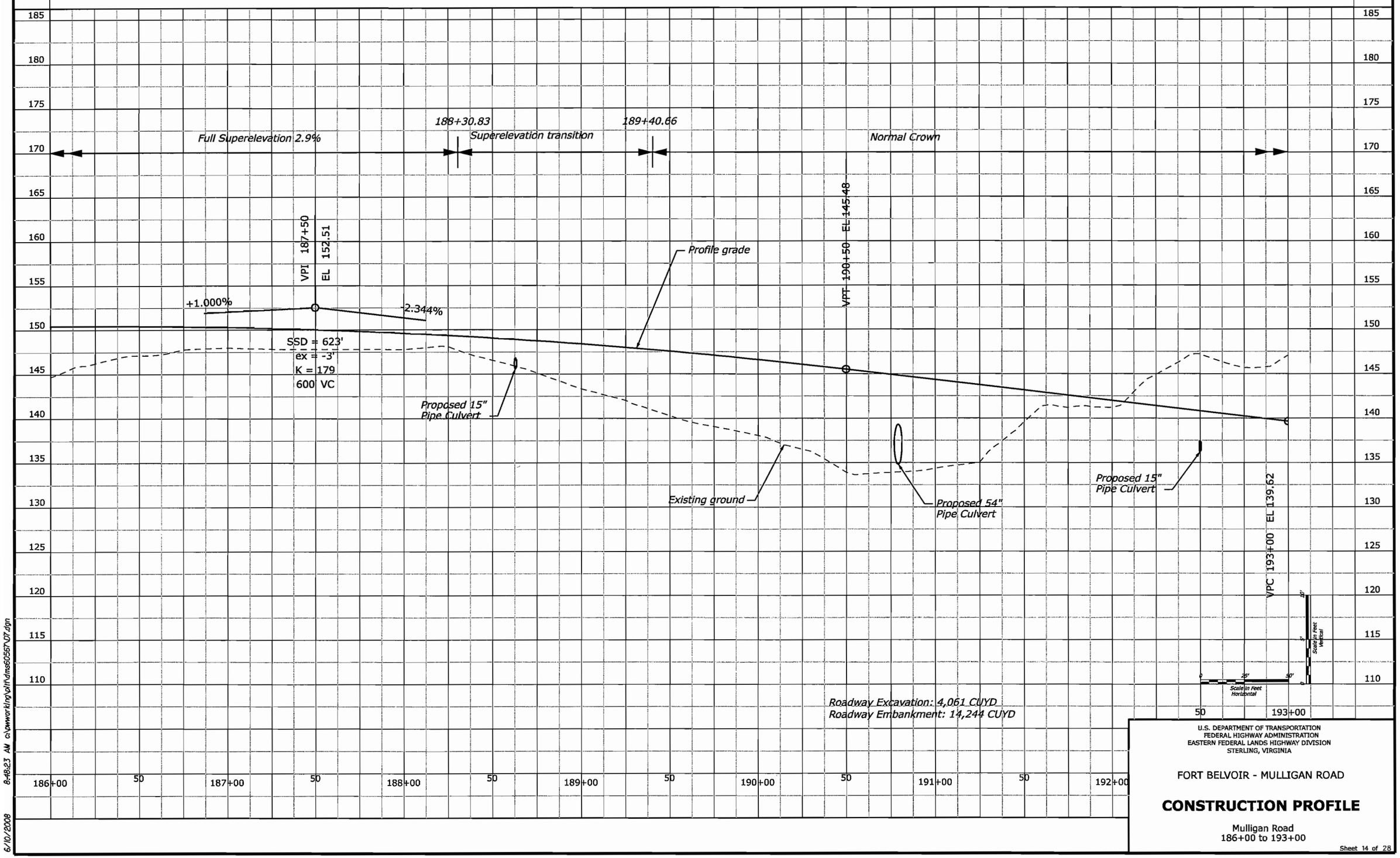

U.S. DEPARTMENT OF TRANSPORTATION
FEDERAL HIGHWAY ADMINISTRATION
EASTERN FEDERAL LANDS HIGHWAY DIVISION
STERLING, VIRGINIA

FORT BELVOIR - MULLIGAN ROAD

CONSTRUCTION PROFILE

Mulligan Road
186+00 to 193+00

6/10/2008 8:48:23 AM c:\wwworking\oit\dms6056\D7.dgn

REG	STATE	PROJECT	SHEET NO.
-	VA	VA-A-AD-48(1)	D8

Approximate Limits of Wetlands

Furnish and Install Std. Underdrain System (Std. VDOT UD-4), Typ.

Limits of Disturbance

Construction Limits

Furnish and Install Std. underdrain system (Std. VDOT UD-1), Typ.

Dirt Road

Future Shared Use Path

Furnish and Install Std. Underdrain System (Std. VDOT UD-4), Typ.

D8-12 D8-1 D8-3 D8-6 D8-8

Mulligan Road Construction Centerline

Furnish and Install Std. Combination Drain (Std. VDOT CD-2), Typ.

Mulligan Road

Furnish and Install Std. underdrain system (Std. VDOT UD-2), Typ.

Matchline 193+00

Matchline 200+00

194+00 195+00 196+00 197+00 198+00 199+00

N 33° 32' 57" W

10+00

SWM #6 Road 10+00.00
Mulligan Road 193+90.00

Furnish and Install Std. Underdrain System (Std. VDOT UD-4), Typ.

D8-2 D8-4 D8-7 D8-9

R=25'

Micropool

D8-5

9 LF 2'x3' gabions

High marsh 129

D8-10

89 LF 3'x3' gabions

Low marsh 128

Bottom of Fill

D8-11

Future Roadway

Construction Limits

SWM Basin #6 Access Road

11+00

Install 10'x7'x20' Class 3 riprap apron (8.6 tons)

Install 4'x4'x16" Class 3 riprap apron (1.6 tons)

Limits of Disturbance

Top of Cut 1V:2H

60" Culvert (Approximate)

SWM Basin No. 6 extended detention enhanced

Install 12'x6'x20" Class 3 riprap apron (8.9 tons)

Install 12'x10'x20" Class 3 riprap apron (15 tons)

12+00

R=15'

Install 6" Aggregate Base Grading AASHTO M-40, #3 Swale across Mulligan Road

12" Max.

1V:5H 1V:5H

CHANNEL SECTION N.T.S. A D8

Install RECP, Type 5A w=10'

4" Min. 12" Max

1V:5H 1V:5H

CHANNEL SECTION N.T.S. B D8

10"

Geotextile fabric

4'

APRON SECTION N.T.S. C D8

0 25' 50'
Scale in Feet

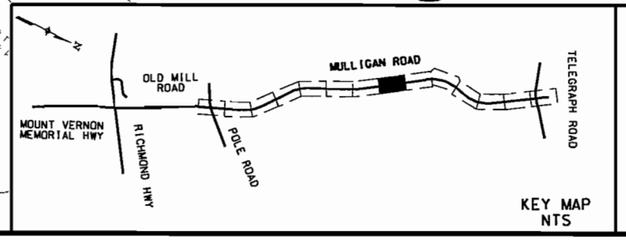

KEY MAP NTS

U.S. DEPARTMENT OF TRANSPORTATION
FEDERAL HIGHWAY ADMINISTRATION
EASTERN FEDERAL LANDS HIGHWAY DIVISION
STERLING, VIRGINIA

FORT BELVOIR - MULLIGAN ROAD

CONSTRUCTION PLAN

Mulligan Road
193+00 to 200+00

Sheet 15 of 28

6/13/2008 9:9:42 AM C:\PWworking\PITT\dms60567\D8.dgn

REG	STATE	PROJECT	SHEET NO.
-	VA	VA-A-AD-48(1)	D8A

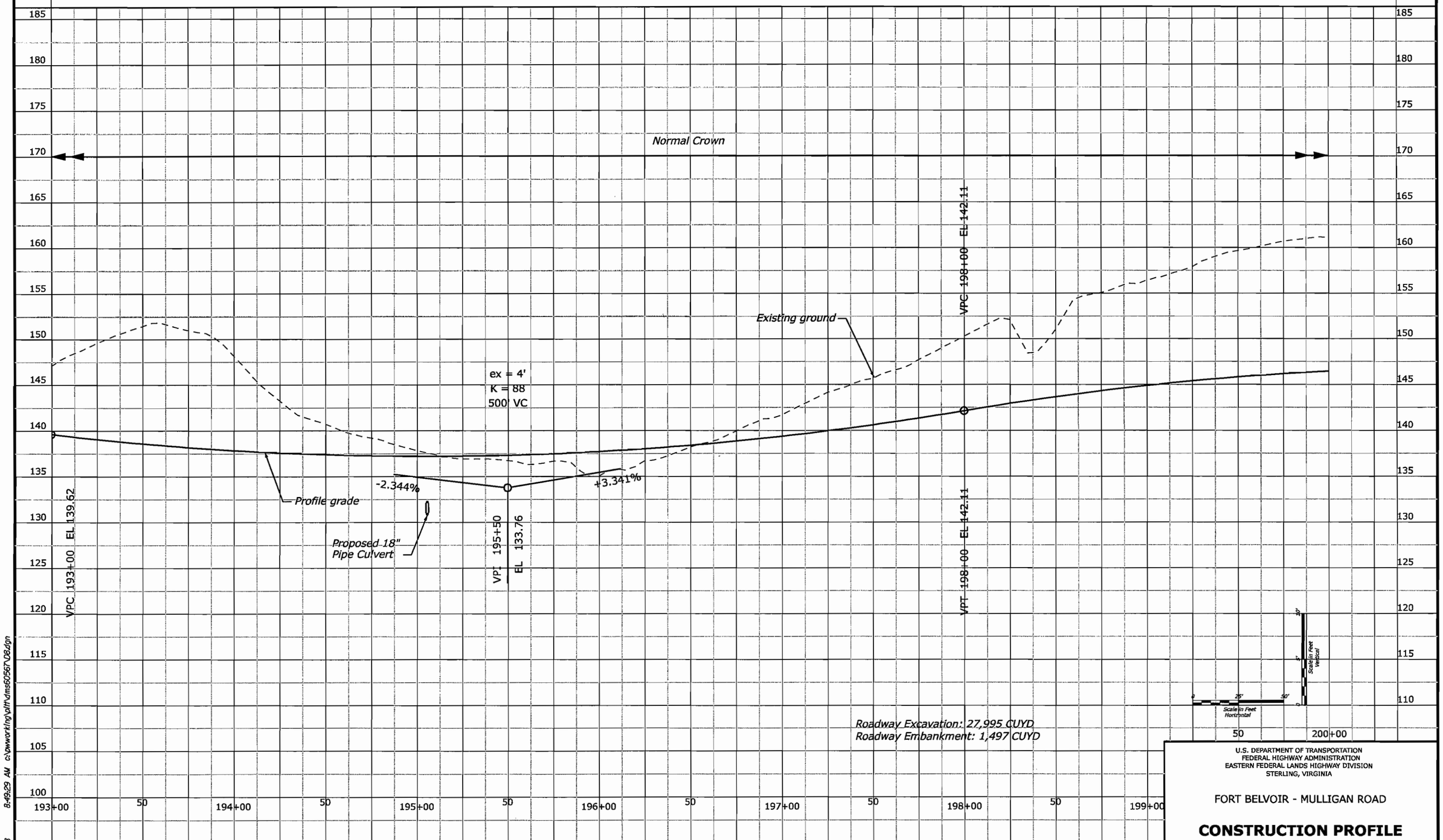

U.S. DEPARTMENT OF TRANSPORTATION
FEDERAL HIGHWAY ADMINISTRATION
EASTERN FEDERAL LANDS HIGHWAY DIVISION
STERLING, VIRGINIA

FORT BELVOIR - MULLIGAN ROAD

CONSTRUCTION PROFILE

Mulligan Road
193+00 to 200+00

6/10/2008 8:49:29 AM c:\pwworking\pdh\dms60567\D8.dgn

REG	STATE	PROJECT	SHEET NO.
-	VA	VA-A-AD-48(1)	D9

Limits of Disturbance

Construction Limits

Furnish and Install Std. Underdrain System (Std. VDOT UD-1), Typ.

Remove bunker (Approx. 30' x 8' Concrete Wall with Wingwalls) to 2 feet below existing ground

Future Shared Use Path

Conc. & Steel Bunker

D9-1

D9-2

D9-3

Matchline 200+00

Matchline 207+00

201+00

202+00

203+00

204+00

205+00

206+00

Mulligan Road

Mixed Hardwoods & Evergreens

Furnish and Install Std. Underdrain System (Std. VDOT UD-2), Typ.

Furnish and Install Std. Combination Drain (Std. VDOT CD-1), Typ.

Mulligan Road Construction Centerline

Furnish and Install Std. Underdrain System (Std. VDOT UD-1), Typ.

Future Roadway

15"

TS 205+39.04

SC 206+74.04

Furnish and Install Std. Underdrain System (Std. VDOT UD-4), Typ.

Spiral = CRBSC7B
PI 206+29.06
θs = 4° 04' 16"
Ls = 135.00'

Construction Limits

Limits of Disturbance

0 25' 50'
Scale in Feet

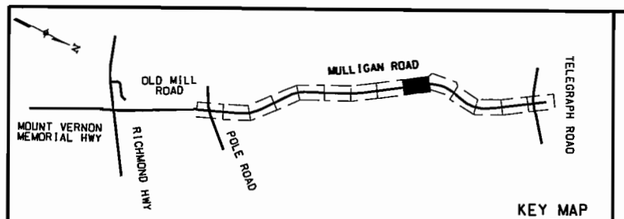

KEY MAP
NTS

U.S. DEPARTMENT OF TRANSPORTATION
FEDERAL HIGHWAY ADMINISTRATION
EASTERN FEDERAL LANDS HIGHWAY DIVISION
STERLING, VIRGINIA

FORT BELVOIR - MULLIGAN ROAD

CONSTRUCTION PLAN

Mulligan Road
200+00 to 207+00

6/19/2008 9:22:06 AM C:\PWworking\PITT\dms60567\D9.dgn

REG	STATE	PROJECT	SHEET NO.
-	VA	VA-A-AD-48(1)	D9A

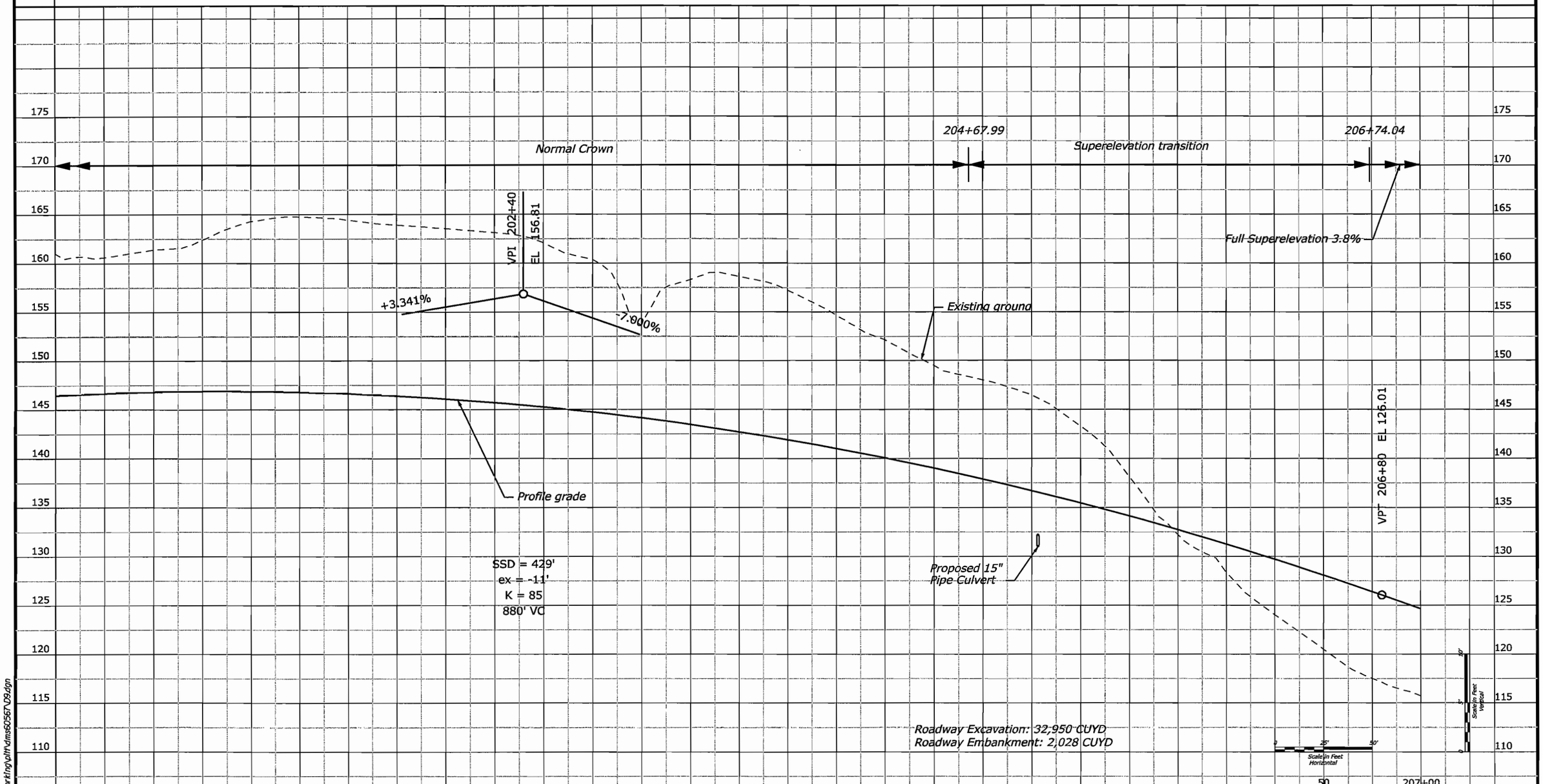

U.S. DEPARTMENT OF TRANSPORTATION
FEDERAL HIGHWAY ADMINISTRATION
EASTERN FEDERAL LANDS HIGHWAY DIVISION
STERLING, VIRGINIA

FORT BELVOIR - MULLIGAN ROAD

CONSTRUCTION PROFILE

Mulligan Road
200+00 to 207+00

6/10/2008 8:50:37 AM c:\pwworking\jolh\dms60567\D9d.dgn

REG	STATE	PROJECT	SHEET NO.
-	VA	VA-A-AD-48(1)	D10

N

Limits of Disturbance

Construction Limits

Install Level Class 2 riprap apron (4.6 tons)

Mixed Hardwoods & Evergreens

Mulligan Road

Matchline 207+00

Matchline 214+00

208+00 209+00 210+00 211+00 212+00 213+00

D10-1 D10-2 D10-3 D10-4 D10-5 D10-6 D10-7 D10-8

Furnish and Install Std. Underdrain System (Std. VDOT UD-2), Typ.

Mulligan Road Construction Centerline

Furnish and Install Std. Underdrain System (Std. VDOT UD-1), Typ.

Future Roadway

Construction Limits

Furnish and Install Std. Underdrain System (Std. VDOT UD-4), Typ.

Limits of Disturbance

15" 18"

CS 213+33.99

Curve = CRBSC7
PI 210+17.96
Δ= 47° 56' 41" (RT)
Δc = 39° 48' 10" (RT)
R = 950.00'
Ts = 490.26'
L = 659.95'

Spiral = CRBSC7A
PI 213+79.01
θs = 4° 04' 16"
Ls = 135.00'

0 25' 50'
Scale In Feet

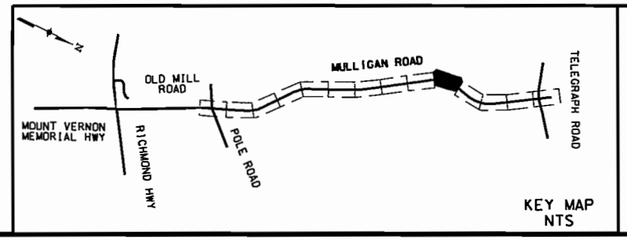

KEY MAP
NTS

U.S. DEPARTMENT OF TRANSPORTATION
FEDERAL HIGHWAY ADMINISTRATION
EASTERN FEDERAL LANDS HIGHWAY DIVISION
STERLING, VIRGINIA

FORT BELVOIR - MULLIGAN ROAD

CONSTRUCTION PLAN

Mulligan Road
207+00 to 214+00

6/10/2008 8:51:48 AM C:\PWworking\PITT\dms60567\D10.dgn

REG	STATE	PROJECT	SHEET NO.
-	VA	VA-A-AD-48(1)	D10A

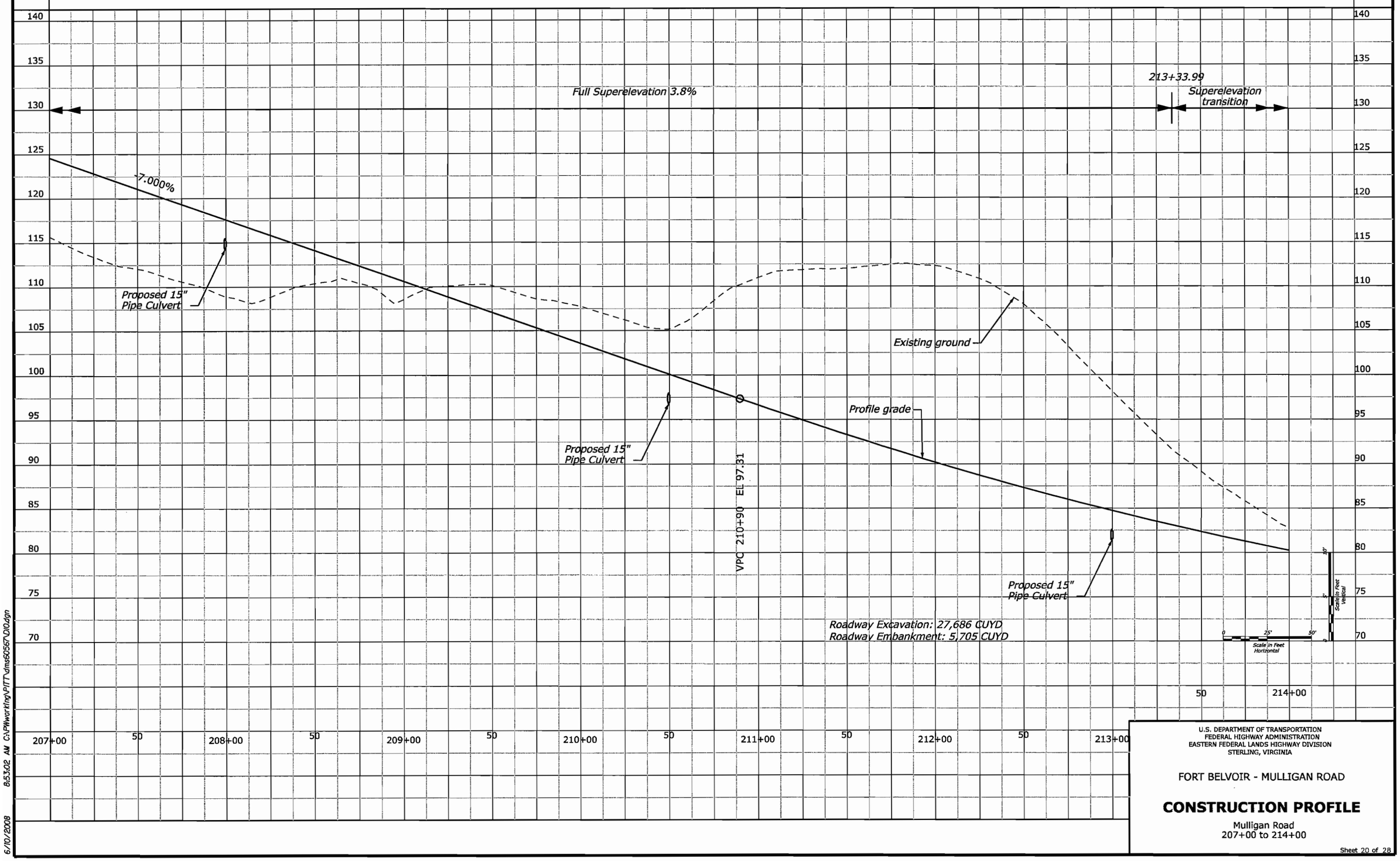

U.S. DEPARTMENT OF TRANSPORTATION
FEDERAL HIGHWAY ADMINISTRATION
EASTERN FEDERAL LANDS HIGHWAY DIVISION
STERLING, VIRGINIA

FORT BELVOIR - MULLIGAN ROAD

CONSTRUCTION PROFILE

Mulligan Road
207+00 to 214+00

6/10/2008 8:53:02 AM C:\PWworking\PITT\dms60567\D10.dgn

REG	STATE	PROJECT	SHEET NO.
-	VA	VA-A-AD-48(1)	D11

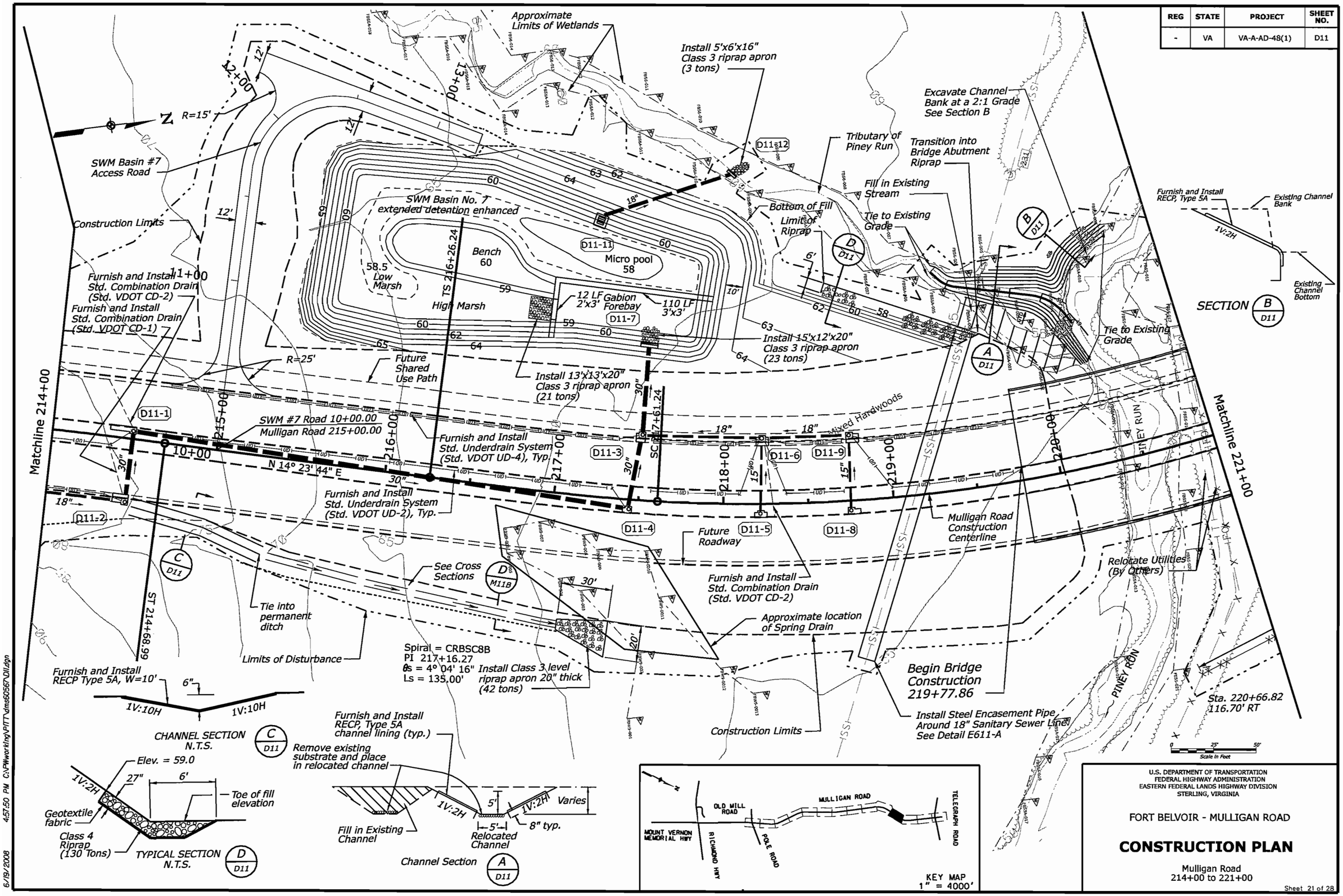

U.S. DEPARTMENT OF TRANSPORTATION
FEDERAL HIGHWAY ADMINISTRATION
EASTERN FEDERAL LANDS HIGHWAY DIVISION
STERLING, VIRGINIA

FORT BELVOIR - MULLIGAN ROAD

CONSTRUCTION PLAN

Mulligan Road
214+00 to 221+00

Sheet 21 of 28

6/19/2008 4:57:50 PM C:\PWworking\FITT\dms60567\D11.dgn

REG	STATE	PROJECT	SHEET NO.
-	VA	VA-A-AD-48(1)	D11A

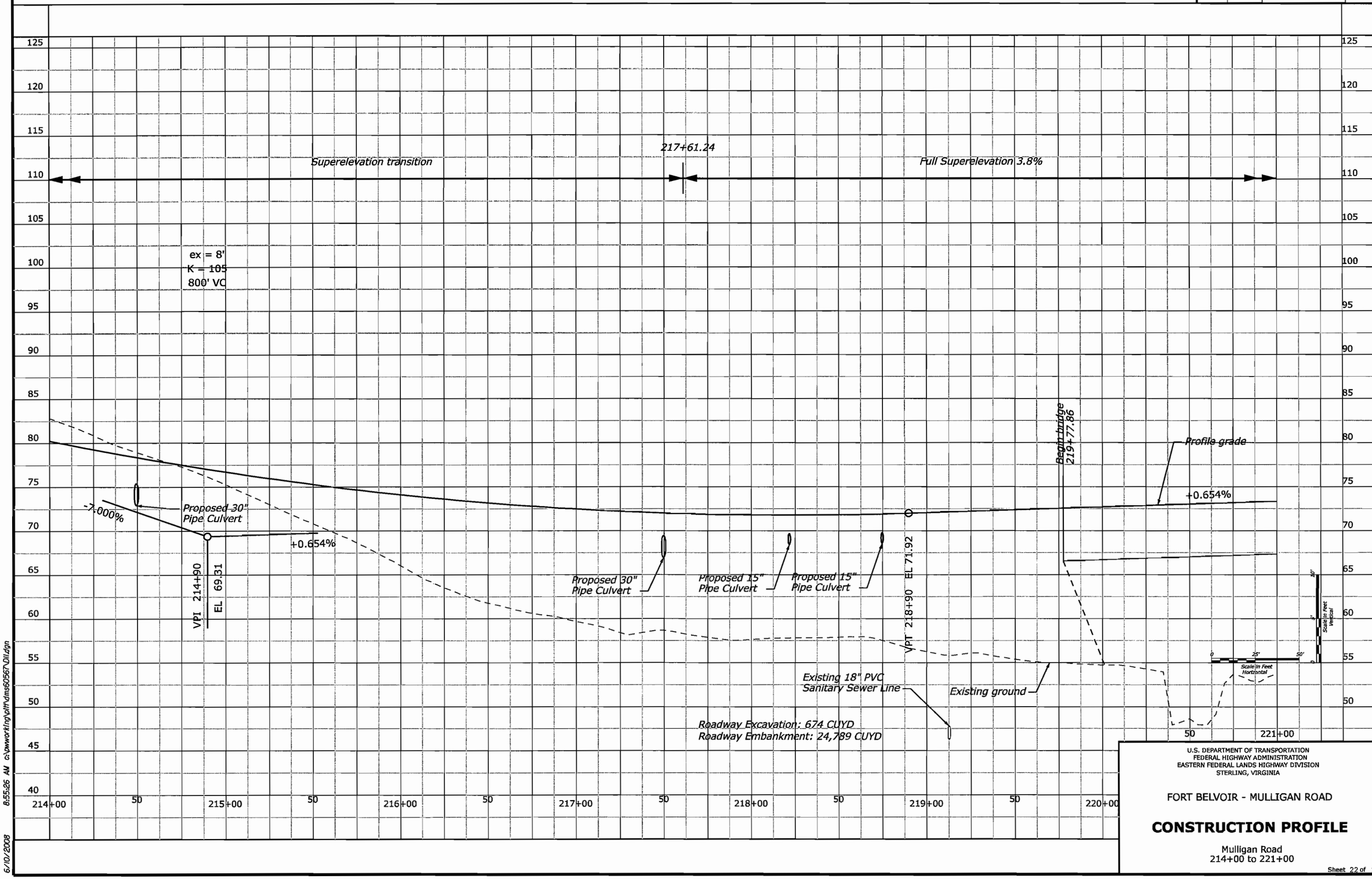

U.S. DEPARTMENT OF TRANSPORTATION
FEDERAL HIGHWAY ADMINISTRATION
EASTERN FEDERAL LANDS HIGHWAY DIVISION
STERLING, VIRGINIA

FORT BELVOIR - MULLIGAN ROAD

CONSTRUCTION PROFILE

Mulligan Road
214+00 to 221+00

6/10/2008 8:55:26 AM c:\pwworking\olh\dms60567\D11.dgn

REG	STATE	PROJECT	SHEET NO.
-	VA	VA-A-AD-48(1)	D12

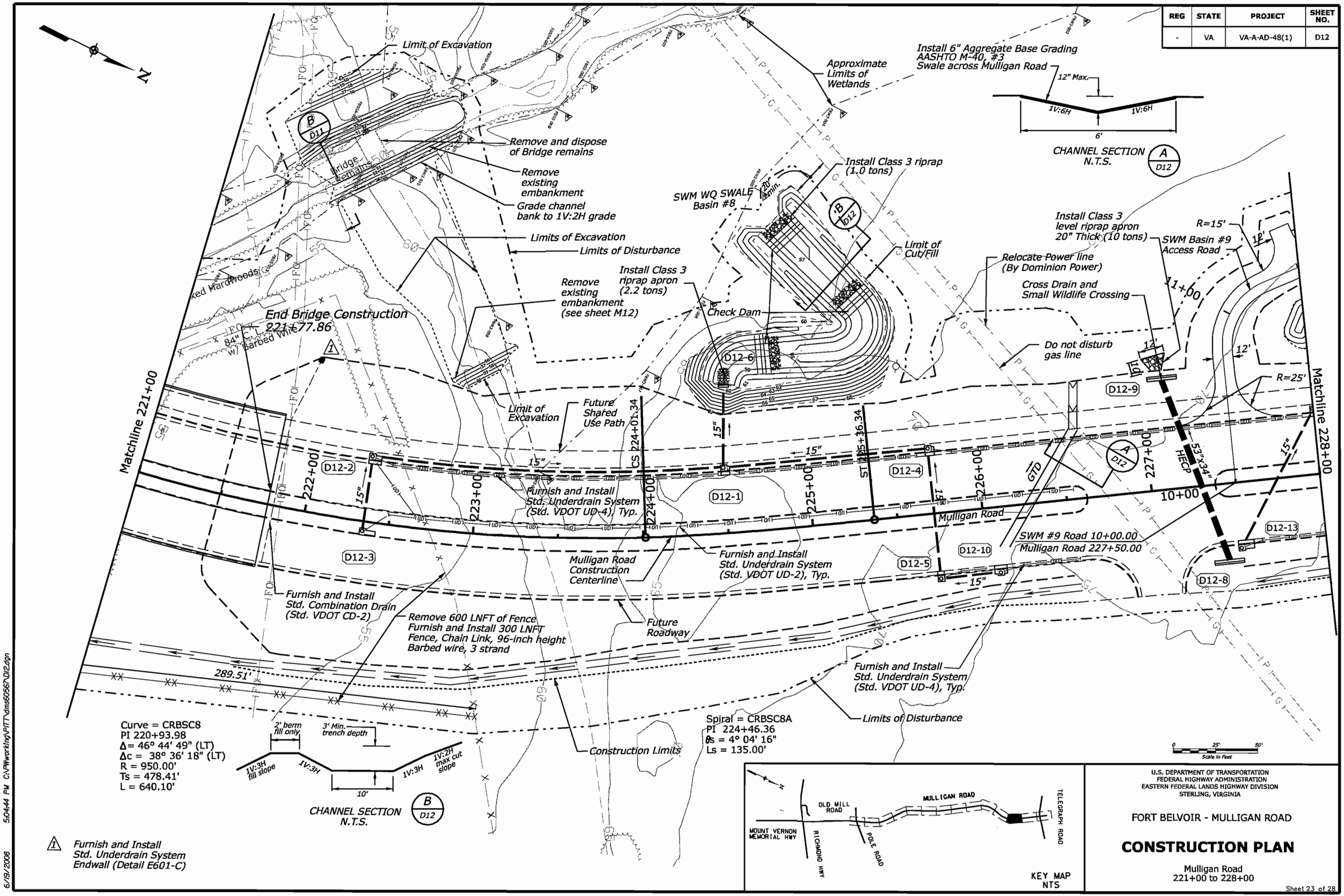

U.S. DEPARTMENT OF TRANSPORTATION
FEDERAL HIGHWAY ADMINISTRATION
EASTERN FEDERAL LANDS HIGHWAY DIVISION
STERLING, VIRGINIA

FORT BELVOIR - MULLIGAN ROAD

CONSTRUCTION PLAN

Mulligan Road
221+00 to 228+00

6/19/2008 5:04:44 PM C:\PWworking\PITT\dms60567\D12.dgn

REG	STATE	PROJECT	SHEET NO.
-	VA	VA-A-AD-48(1)	D12A

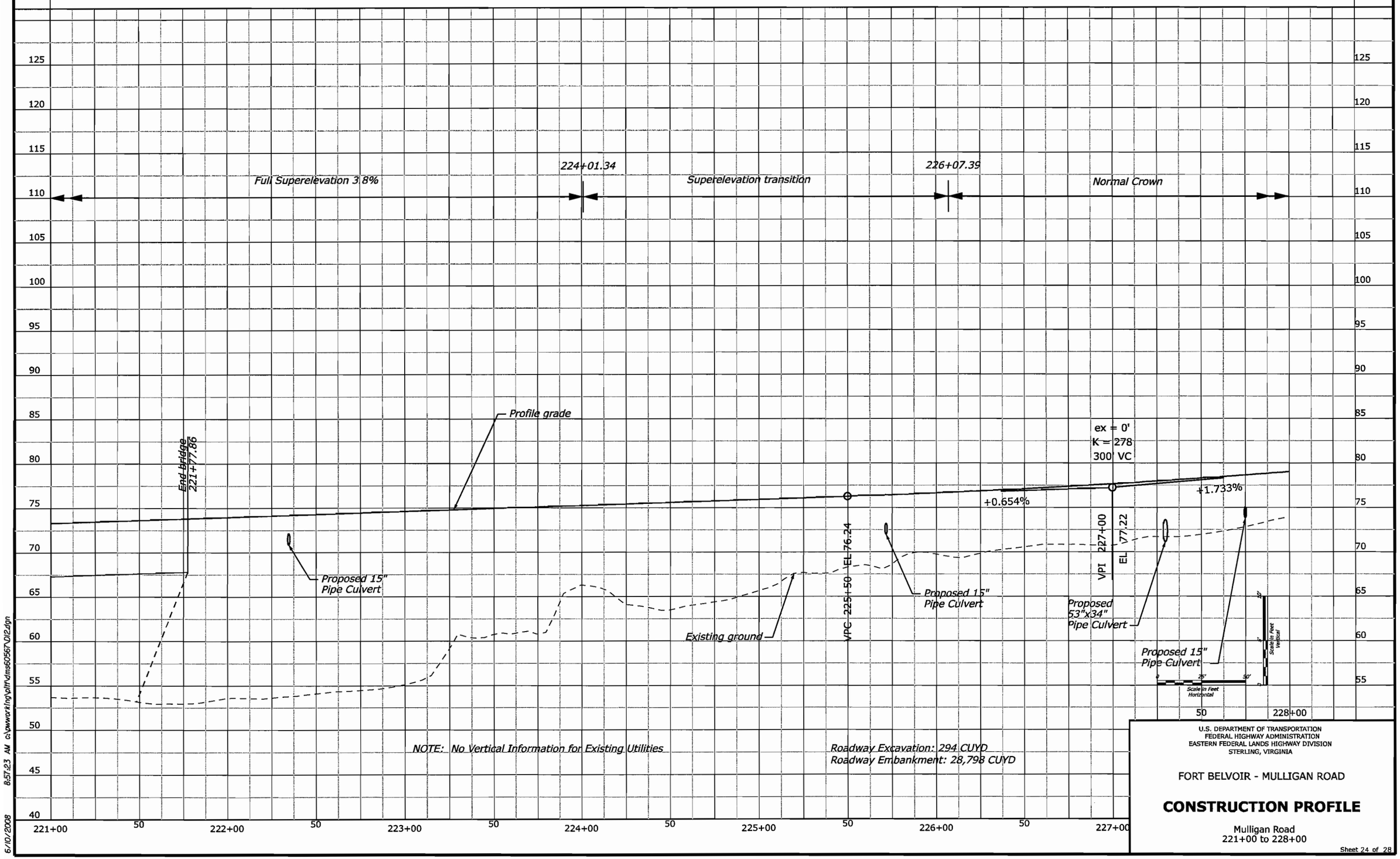

NOTE: No Vertical Information for Existing Utilities

Roadway Excavation: 294 CUYD
Roadway Embankment: 28,798 CUYD

U.S. DEPARTMENT OF TRANSPORTATION
FEDERAL HIGHWAY ADMINISTRATION
EASTERN FEDERAL LANDS HIGHWAY DIVISION
STERLING, VIRGINIA

FORT BELVOIR - MULLIGAN ROAD

CONSTRUCTION PROFILE

Mulligan Road
221+00 to 228+00

6/10/2008 8:57:23 AM c:\pwworking\plh\dms60567\D12.dgn

REG	STATE	PROJECT	SHEET NO.
-	VA	VA-A-AD-48(1)	D13

PINEY RUN

Approximate Limits of Wetlands

Install Level Class 3 riprap apron (10 tons)

Furnish and Install Std. Underdrain System (Std. VDOT UD-4), Typ.

Future Shared Use Path

Limits of Disturbance

Construction Limits

Channel Bottom Elev. = 63.0

Channel Bottom Elev. = 65.5

1'x1' Gabions

R=15'

12+00

Limit of Cut/Fill

Forebay

D13-4

D13-3

D13-2

SWM INFILTRATION BASIN NO. 9

Matchline 228+00

Matchline 235+00

Mixed Hardwoods & Evergreens

229+00

230+00

231+00

232+00

233+00

234+00

Furnish and Install Std. Underdrain System (Std. VDOT UD-2), Typ.

End full width grading 234+50

N 32° 21' 05" W

Mulligan Road

Furnish and Install Std. Underdrain System (Std. VDOT UD-4), Typ.

Mulligan Road Construction Centerline

10+00

D13-5

D13-1

D13-6

Future Roadway

Construction Limits

Limits of Disturbance

Cross Drain and Small Wildlife Crossing

Construction Limits

Exist. Swale

Install 10'x2'x20" Class 3 riprap apron (2.5 tons)

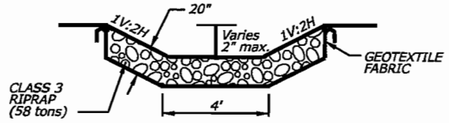

TYPICAL CHANNEL SECTION N.T.S. (A / D13)

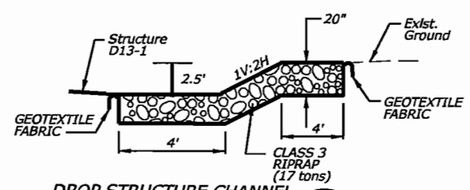

DROP STRUCTURE CHANNEL SECTION N.T.S. (B / D13)

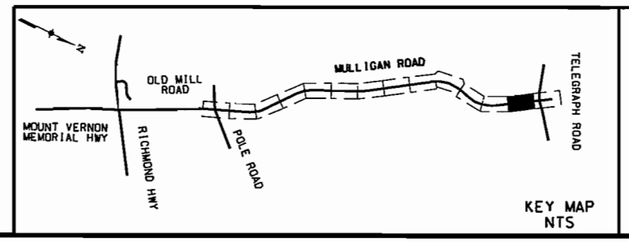

KEY MAP NTS

0 25' 50'
Scale In Feet

U.S. DEPARTMENT OF TRANSPORTATION
FEDERAL HIGHWAY ADMINISTRATION
EASTERN FEDERAL LANDS HIGHWAY DIVISION
STERLING, VIRGINIA

FORT BELVOIR - MULLIGAN ROAD

CONSTRUCTION PLAN

Mulligan Road
228+00 to 235+00

6/19/2008 5:08:13 PM C:\PWworking\PITT\dms60567\D13.dgn

REG	STATE	PROJECT	SHEET NO.
-	VA	VA-A-AD-48(1)	D13A

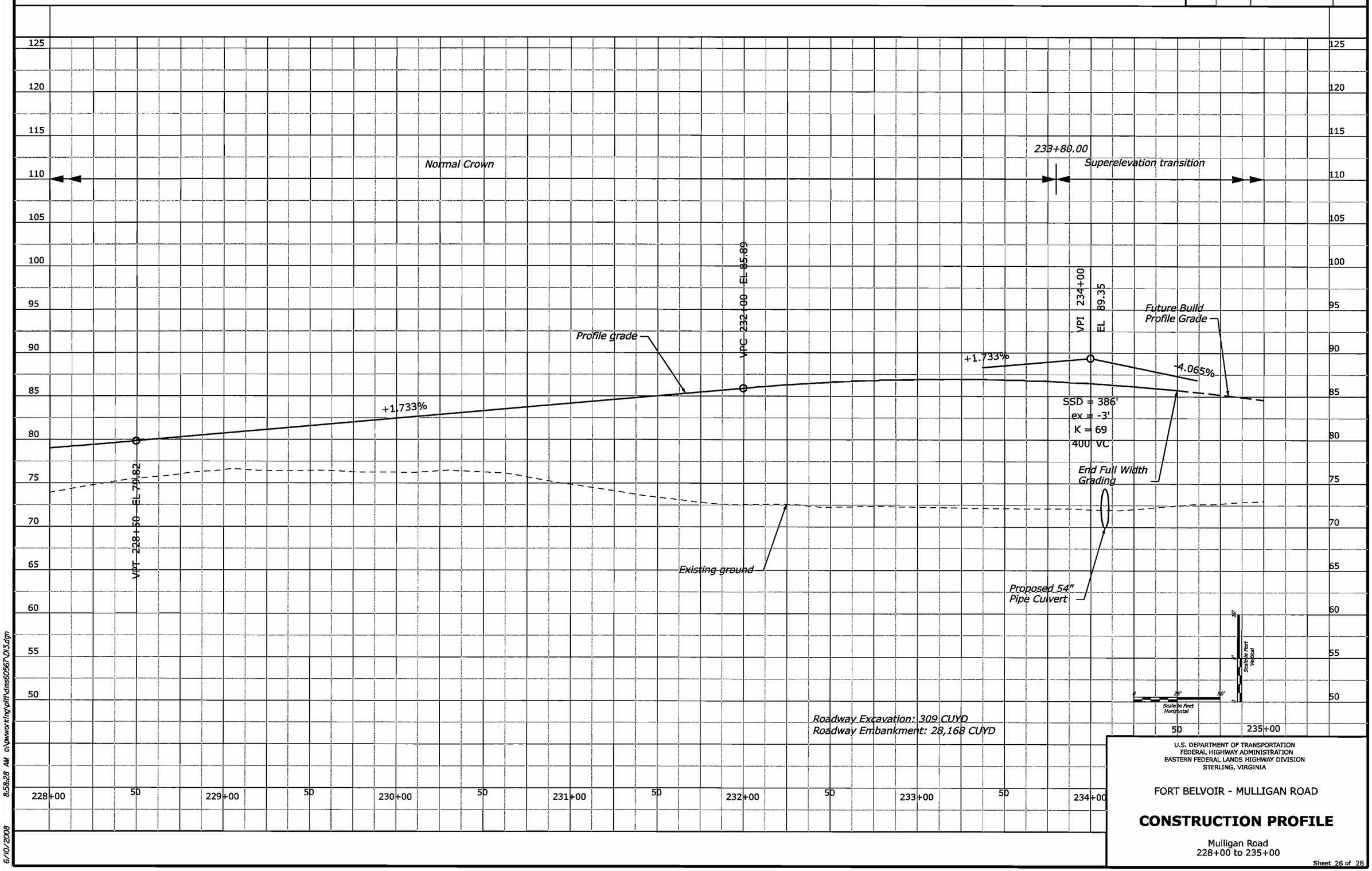

U.S. DEPARTMENT OF TRANSPORTATION
FEDERAL HIGHWAY ADMINISTRATION
EASTERN FEDERAL LANDS HIGHWAY DIVISION
STERLING, VIRGINIA

FORT BELVOIR - MULLIGAN ROAD

CONSTRUCTION PROFILE

Mulligan Road
228+00 to 235+00

6/10/2008 8:58:28 AM c:\pwworking\plfh\dms60567\D13.dgn

REG	STATE	PROJECT	SHEET NO.
-	VA	VA-A-AD-48(1)	D14

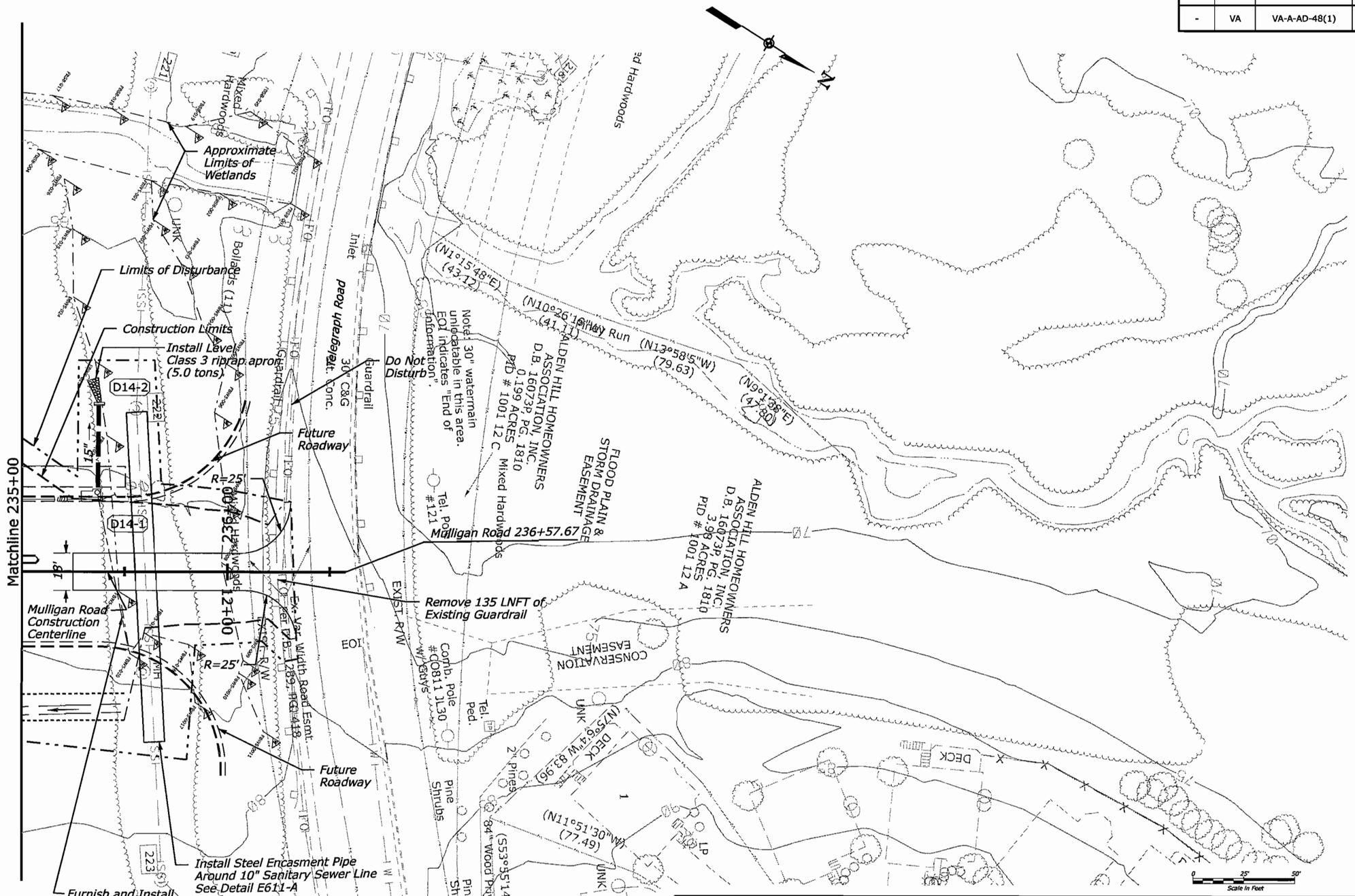

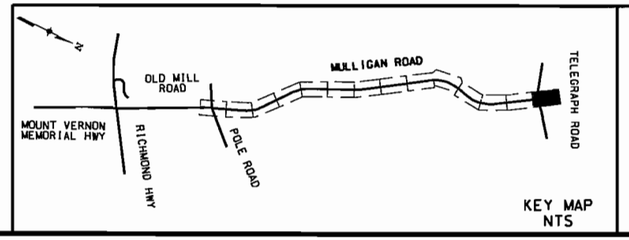

U.S. DEPARTMENT OF TRANSPORTATION
FEDERAL HIGHWAY ADMINISTRATION
EASTERN FEDERAL LANDS HIGHWAY DIVISION
STERLING, VIRGINIA

FORT BELVOIR - MULLIGAN ROAD

CONSTRUCTION PLAN

Mulligan Road
235+00 to 236+57.67

Sheet 27 of 28

6/13/2008 1:27:20 PM C:\Pwworking\PITT\dms60567\D14.dgn

REG	STATE	PROJECT	SHEET NO.
-	VA	VA-A-AD-48(1)	D14A

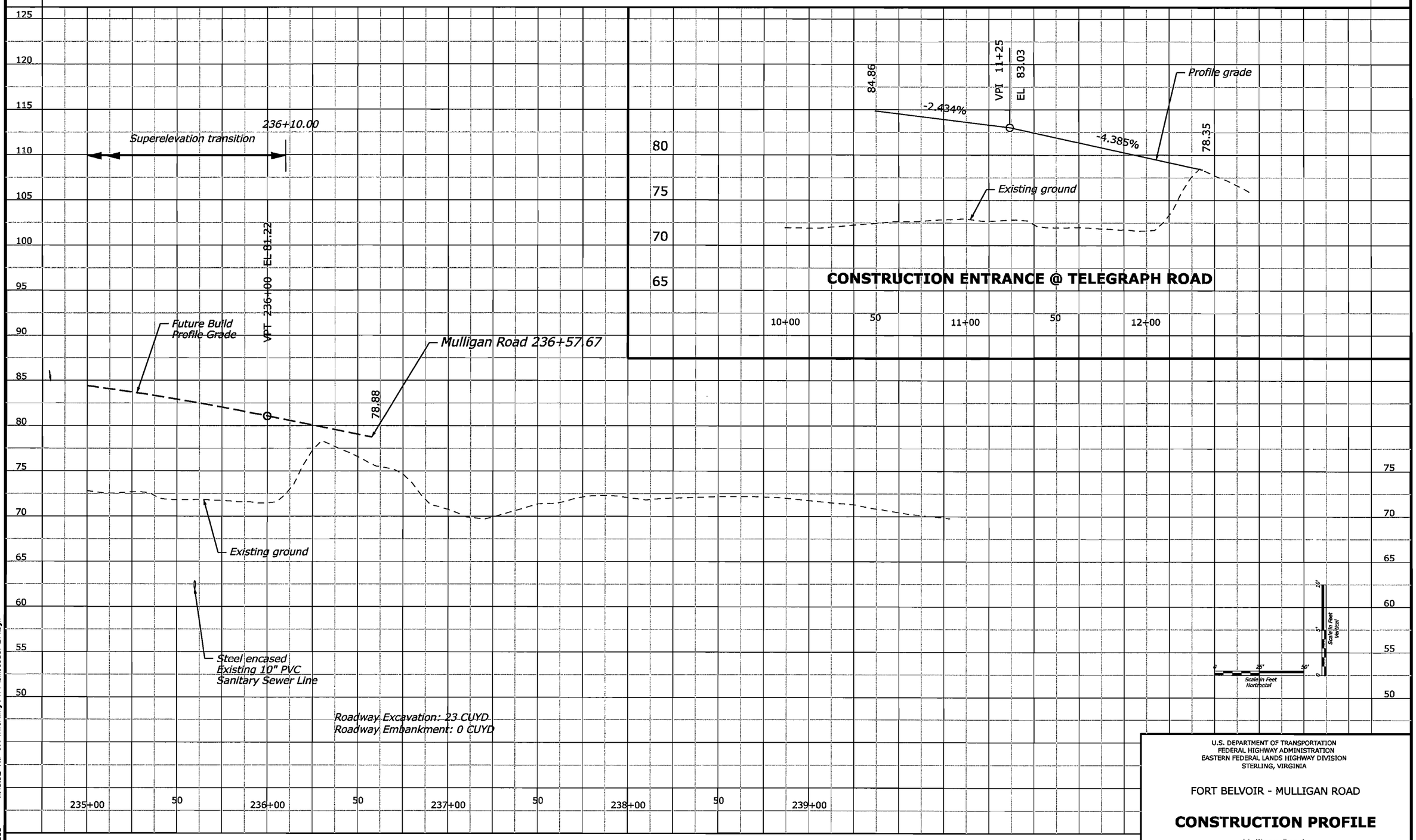

U.S. DEPARTMENT OF TRANSPORTATION
FEDERAL HIGHWAY ADMINISTRATION
EASTERN FEDERAL LANDS HIGHWAY DIVISION
STERLING, VIRGINIA

FORT BELVOIR - MULLIGAN ROAD

CONSTRUCTION PROFILE

Mulligan Road
235+00 to 236+57.67

6/12/2008 11:45:52 AM C:\PWworking\PITT\dms60567\D14.dgn

REG	STATE	PROJECT	SHEET NO.
-	VA	VA-A-AD-48(1)	DM1

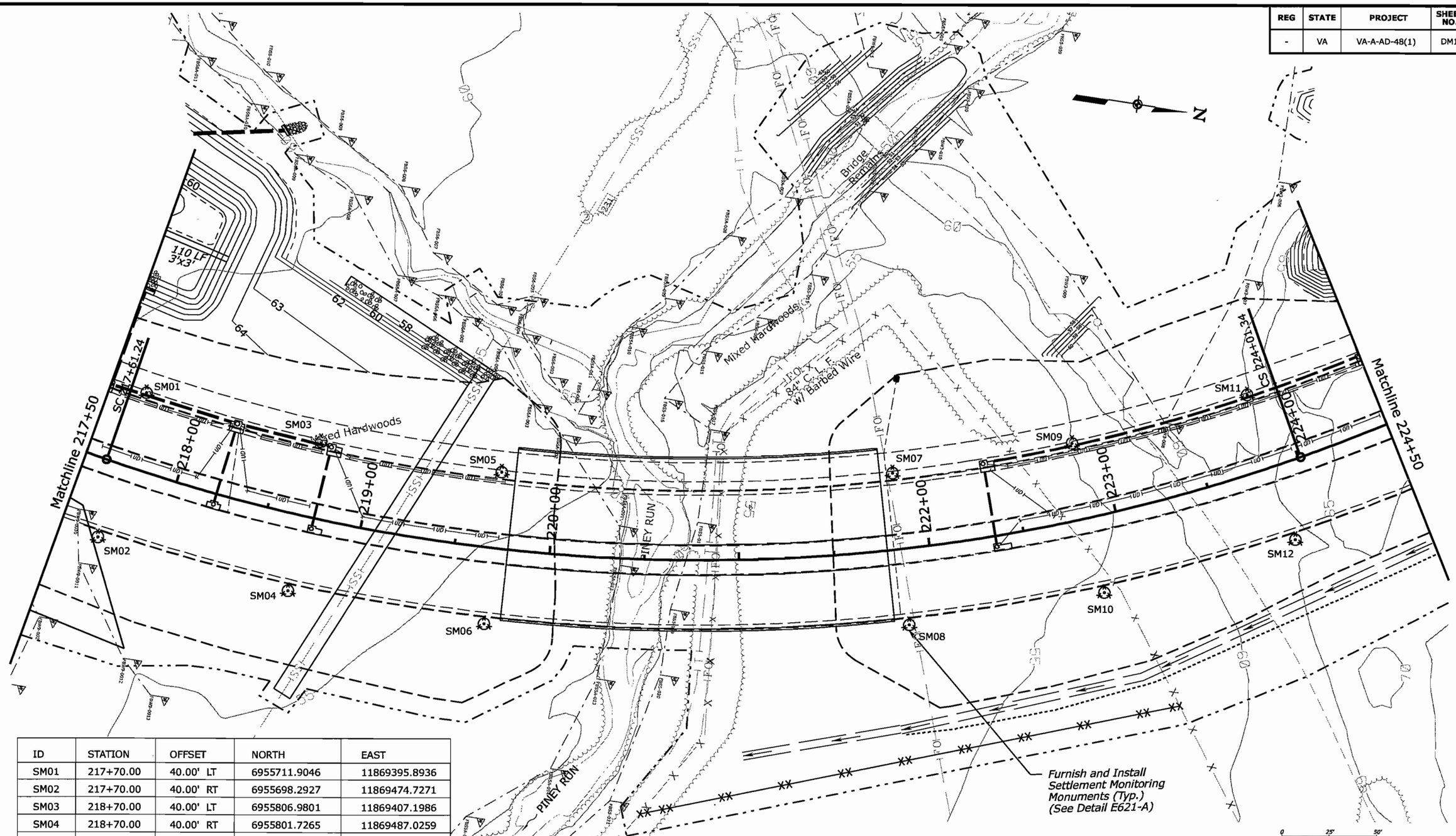

ID	STATION	OFFSET	NORTH	EAST
SM01	217+70.00	40.00' LT	6955711.9046	11869395.8936
SM02	217+70.00	40.00' RT	6955698.2927	11869474.7271
SM03	218+70.00	40.00' LT	6955806.9801	11869407.1986
SM04	218+70.00	40.00' RT	6955801.7265	11869487.0259
SM05	219+70.00	40.00' LT	6955902.7172	11869408.4515
SM06	219+70.00	40.00' RT	6955905.8800	11869488.3889
SM07	221+85.00	40.00' LT	6956105.8339	11869377.1916
SM08	221+85.00	40.00' RT	6956126.8531	11869454.3809
SM09	222+85.00	40.00' LT	6956196.7640	11869347.2104
SM10	222+85.00	40.00' RT	6956225.7771	11869421.7640
SM11	223+85.00	40.00' LT	6956284.0407	11869307.8412
SM12	223+85.00	40.00' RT	6956320.7265	11869378.9338

U.S. DEPARTMENT OF TRANSPORTATION
FEDERAL HIGHWAY ADMINISTRATION
EASTERN FEDERAL LANDS HIGHWAY DIVISION
STERLING, VIRGINIA

FORT BELVOIR - MULLIGAN ROAD

SETTLEMENT MONITORING MONUMENTS

Mulligan Road
217+50 to 224+50

Sheet 1 of 1

6/19/2008 2:06:40 PM C:\PWworking\PITT\dms50557\DM1.dgn

REG	STATE	PROJECT	SHEET NO.
-	VA	VA-A-AD-48(1)	DS1

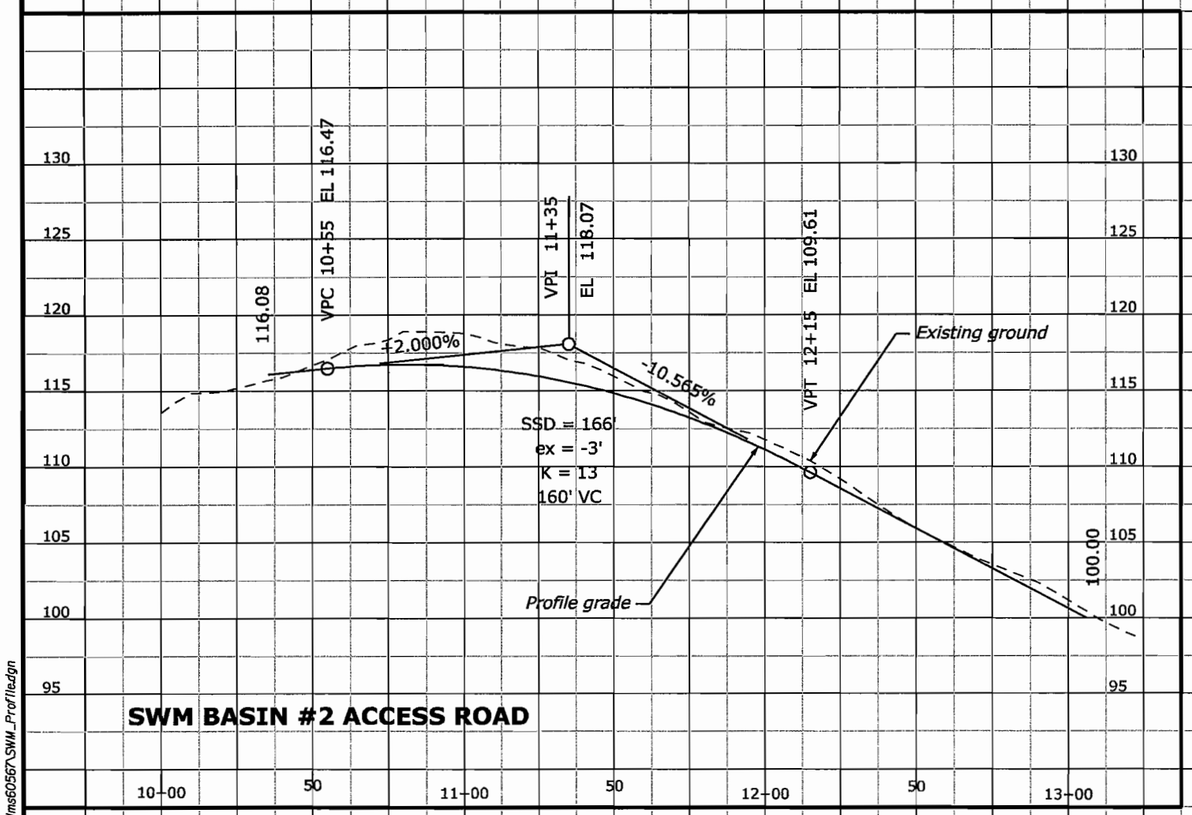

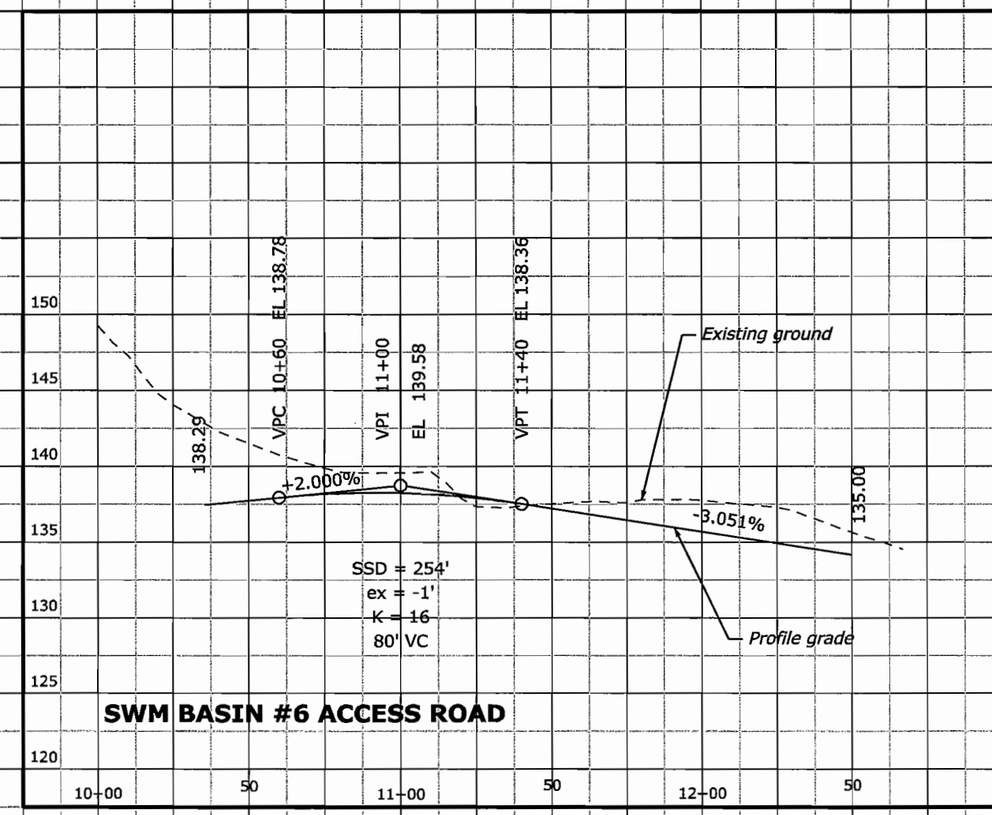

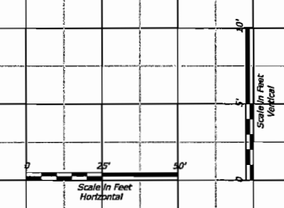

U.S. DEPARTMENT OF TRANSPORTATION
FEDERAL HIGHWAY ADMINISTRATION
EASTERN FEDERAL LANDS HIGHWAY DIVISION
STERLING, VIRGINIA

FORT BELVOIR - MULLIGAN ROAD

CONSTRUCTION PROFILE

Mulligan Road
SWM Access Road Profiles

Sheet 1 of 2

6/17/2008 11:45:10 AM C:\PWworking\PITT\dms60567\SWM_Profile.dgn

REG	STATE	PROJECT	SHEET NO.
-	VA	VA-A-AD-48(1)	DS2

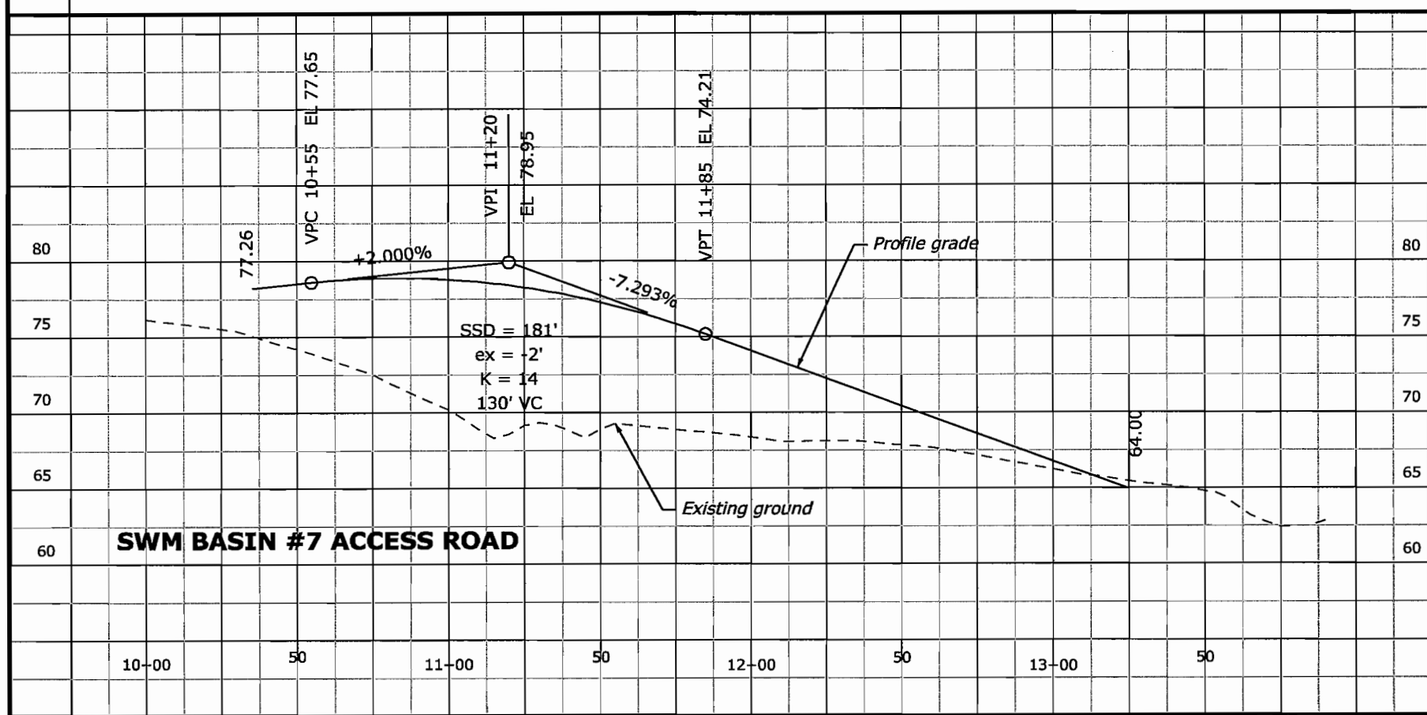

SWM BASIN #7 ACCESS ROAD

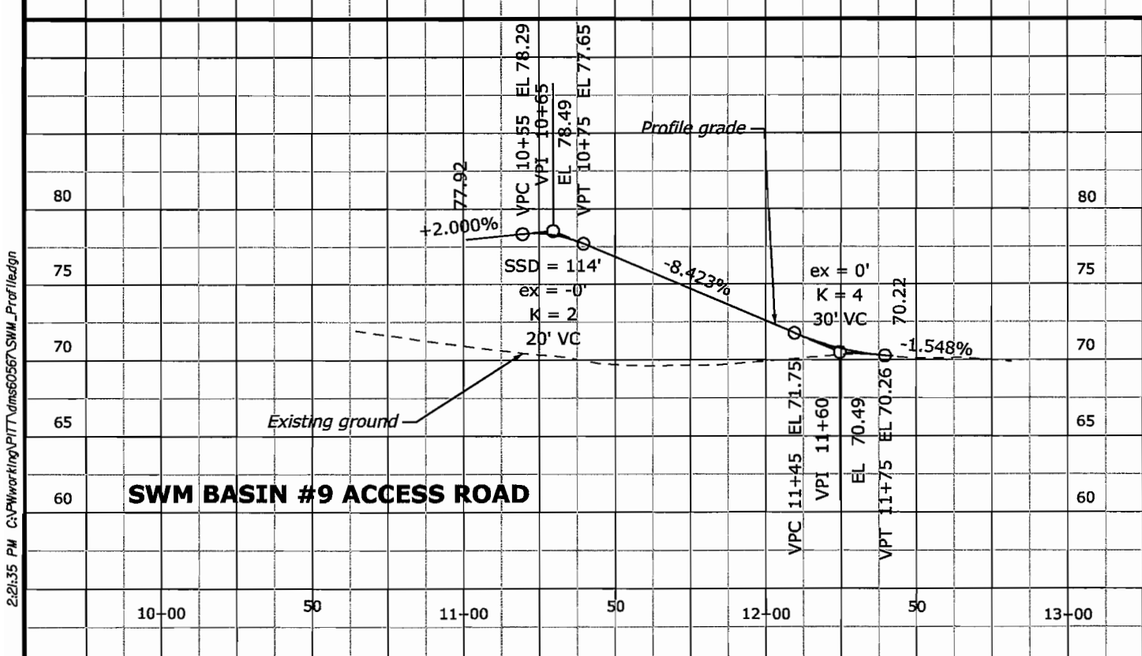

SWM BASIN #9 ACCESS ROAD

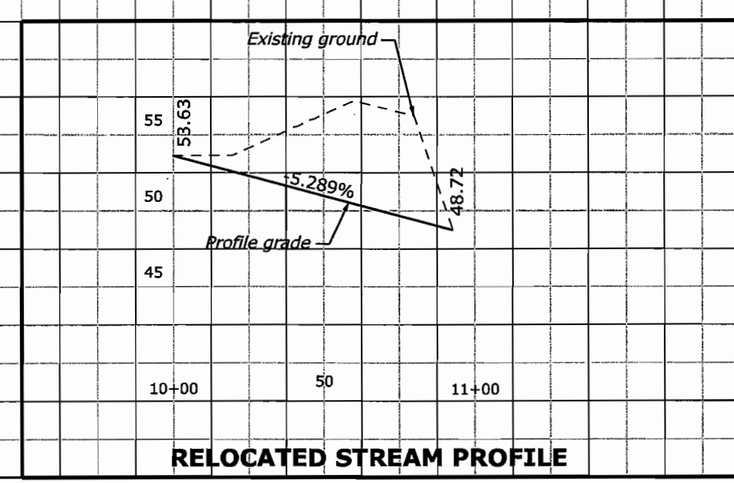

RELOCATED STREAM PROFILE

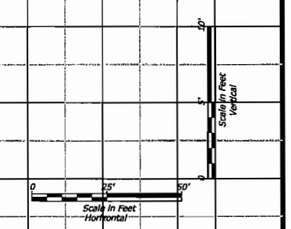

U.S. DEPARTMENT OF TRANSPORTATION
FEDERAL HIGHWAY ADMINISTRATION
EASTERN FEDERAL LANDS HIGHWAY DIVISION
STERLING, VIRGINIA

FORT BELVOIR - MULLIGAN ROAD

CONSTRUCTION PROFILE

Mulligan Road
SWM Access Road and
Relocated Stream Profiles

Sheet 2 of 2

6/11/2008 2:21:35 PM C:\PWworking\PITT\dms60567\SWM_Profile.dgn

REG	STATE	PROJECT	SHEET NO.
-	VA	VA-A-AD-48(1)	H1

NOTE: 1. Verify the vertical depth of 24-inch waterline at the proposed 38"x24" HECP crossing at 149+90 by performing a test hole prior to pipe installation. Contact Fairfax Water (Bill Johnston, Supervisor Engineering Inspector, 703-289-6350) at least 14 calendar days prior to digging the test hole.

2. Provide a Minimum of 2 feet of cover over all waterlines during construction activities.

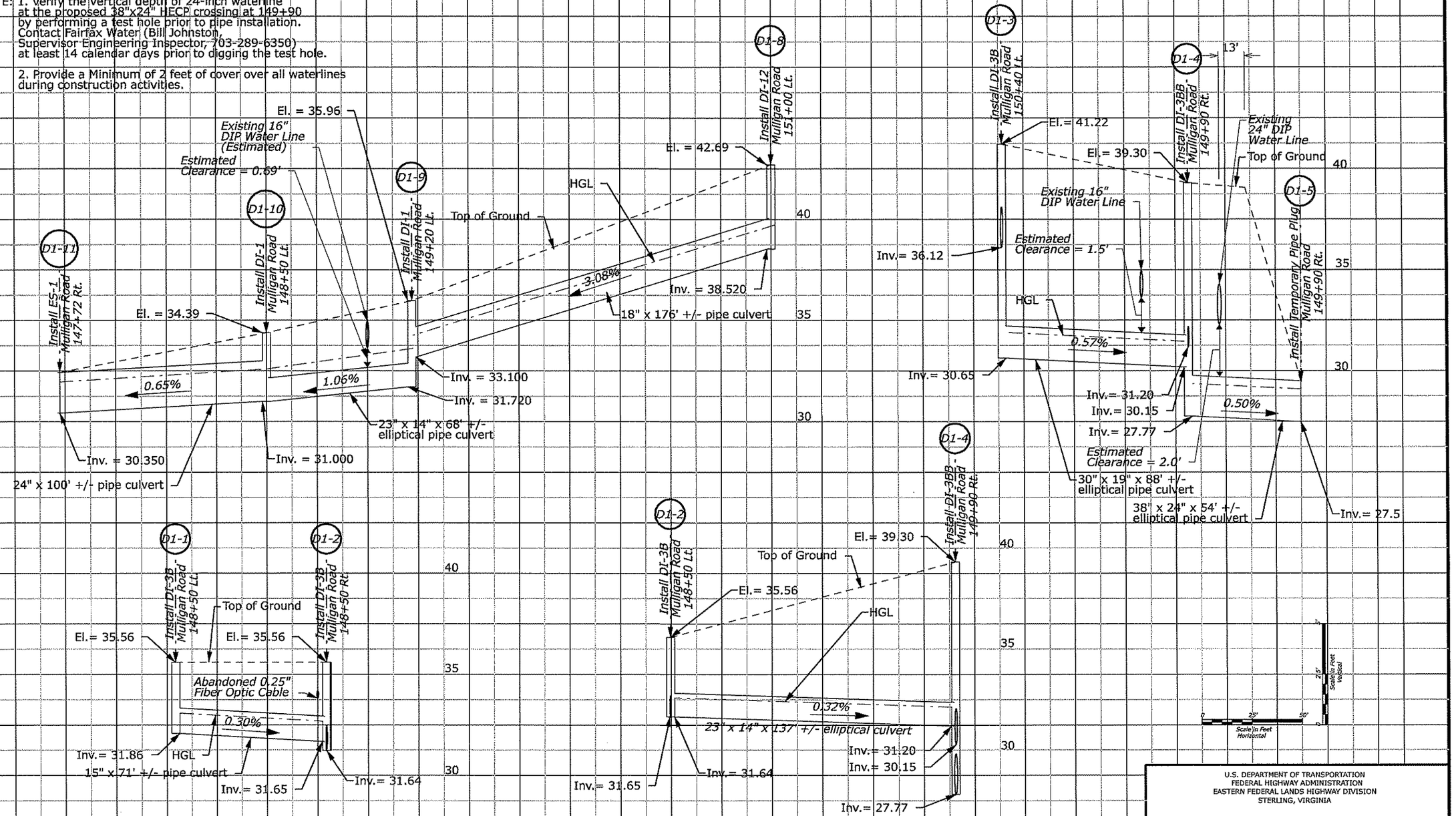

HGL Denotes Hydraulic Grade Line

U.S. DEPARTMENT OF TRANSPORTATION
FEDERAL HIGHWAY ADMINISTRATION
EASTERN FEDERAL LANDS HIGHWAY DIVISION
STERLING, VIRGINIA

FORT BELVOIR - MULLIGAN ROAD

DRAINAGE PROFILE

Sheet 1 of 18

C:\PWworking\PITT\dms60556\H01.dgn

7/10/2008

REG	STATE	PROJECT	SHEET NO.
-	VA	VA-A-AD-48(1)	H2

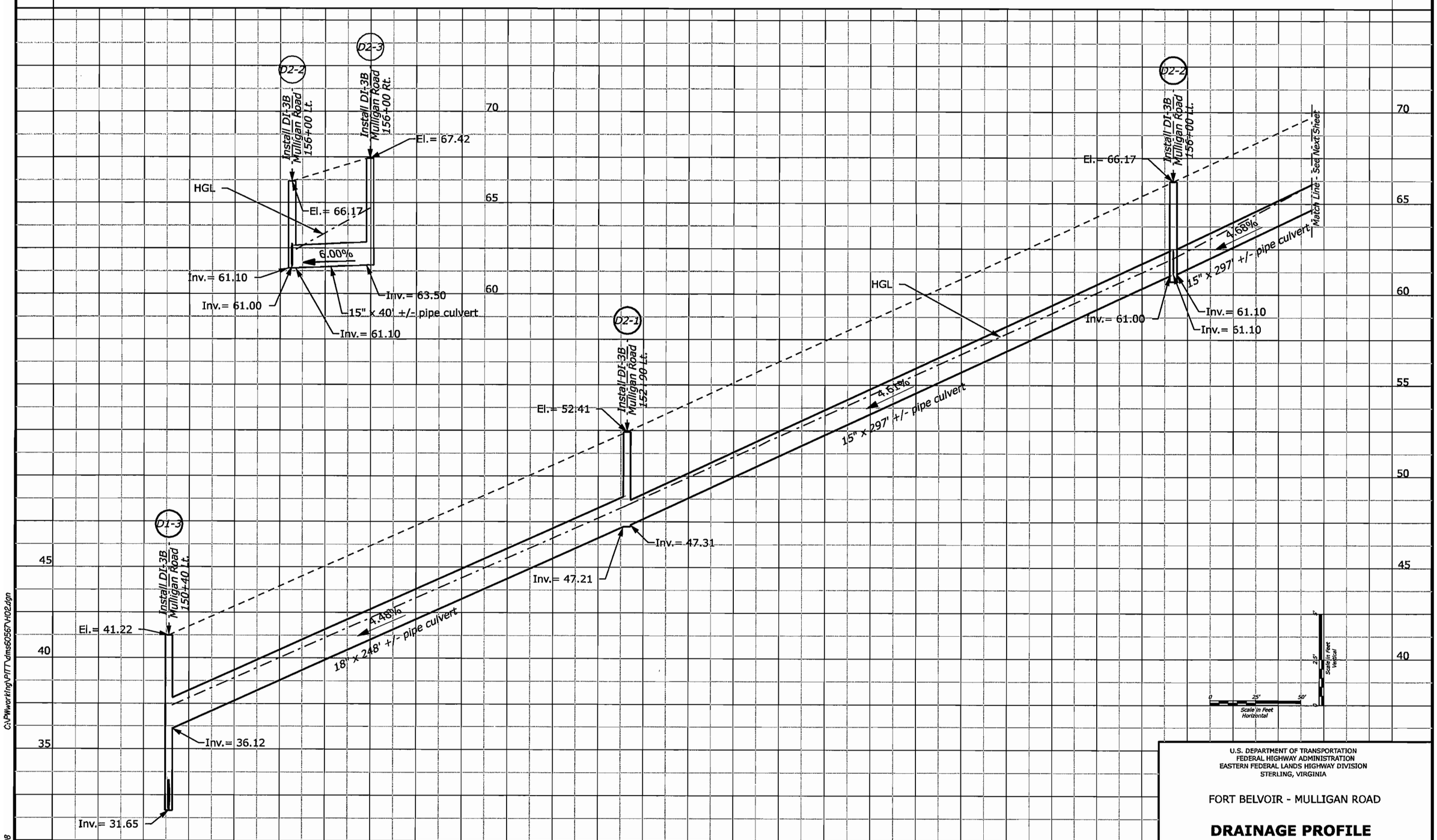

HGL Denotes Hydraulic Grade Line

U.S. DEPARTMENT OF TRANSPORTATION
FEDERAL HIGHWAY ADMINISTRATION
EASTERN FEDERAL LANDS HIGHWAY DIVISION
STERLING, VIRGINIA

FORT BELVOIR - MULLIGAN ROAD

DRAINAGE PROFILE

Sheet 2 of 18

C:\PWworking\PITT\dms60567\H02.dgn

6/19/2008

REG	STATE	PROJECT	SHEET NO.
-	VA	VA-A-AD-48(1)	H3

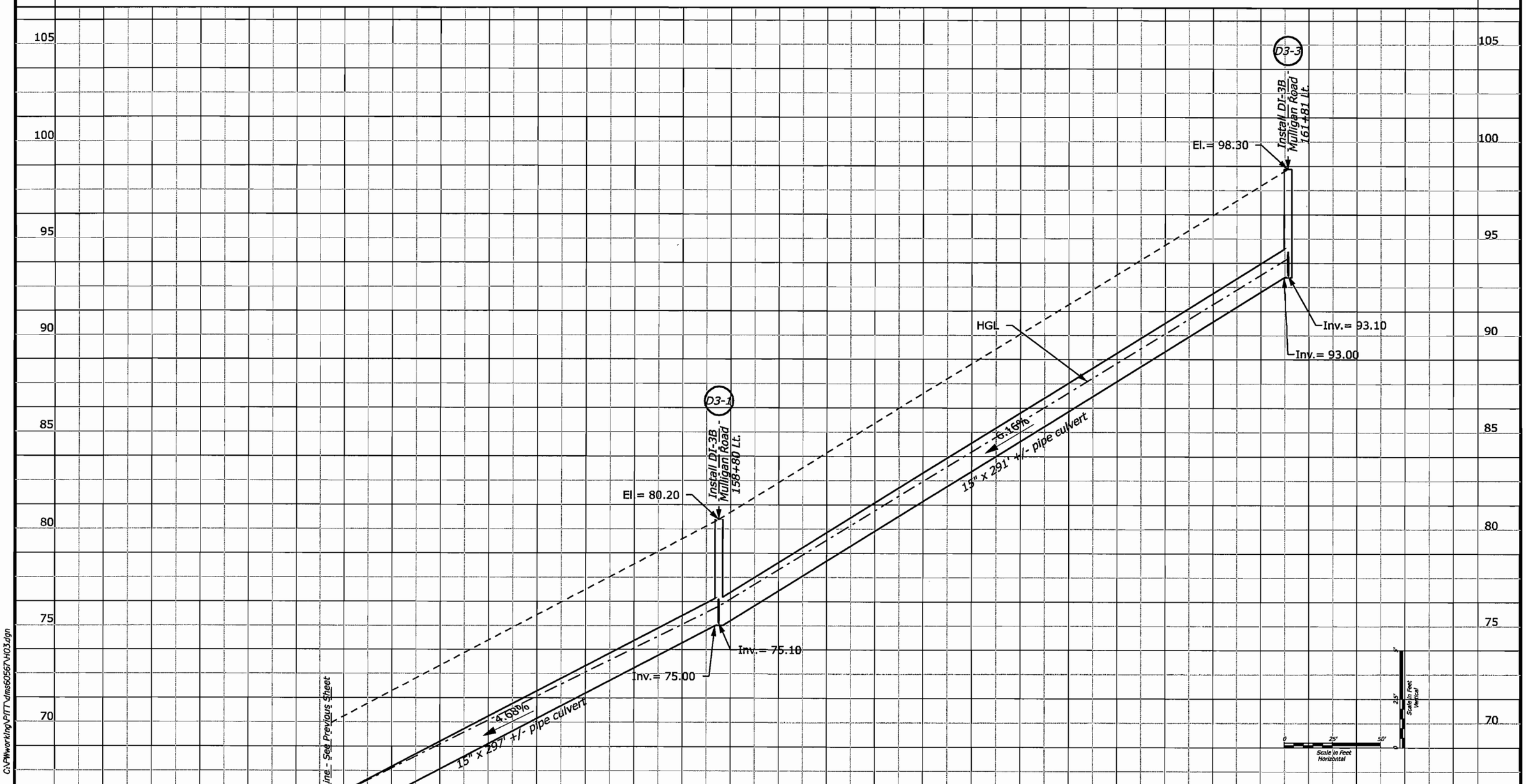

U.S. DEPARTMENT OF TRANSPORTATION
FEDERAL HIGHWAY ADMINISTRATION
EASTERN FEDERAL LANDS HIGHWAY DIVISION
STERLING, VIRGINIA

FORT BELVOIR - MULLIGAN ROAD

DRAINAGE PROFILE

HGL Denotes Hydraulic Grade Line

C:\PWworking\PITT\dms60567\H03.dgn

6/19/2008

REG	STATE	PROJECT	SHEET NO.
-	VA	VA-A-AD-48(1)	H4

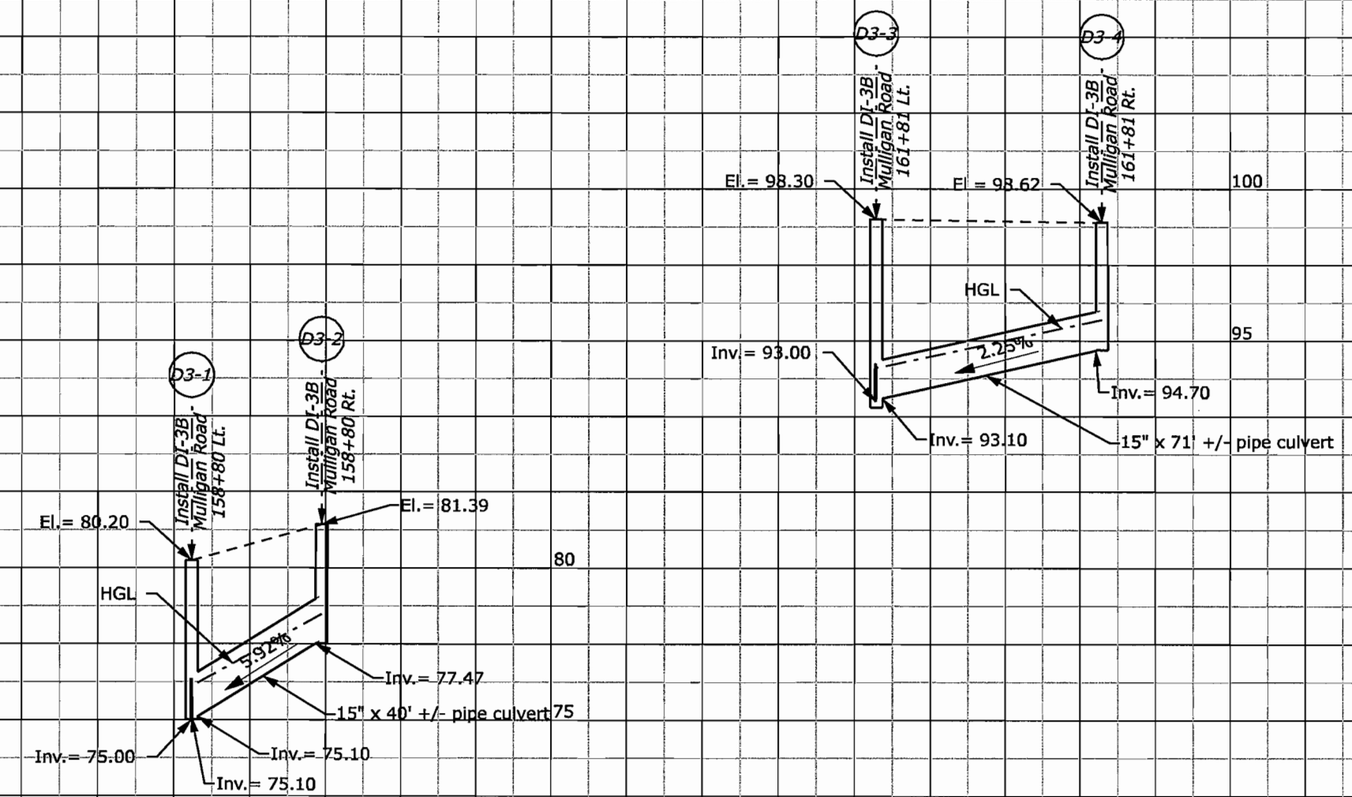

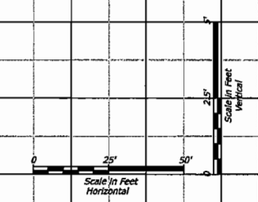

U.S. DEPARTMENT OF TRANSPORTATION
FEDERAL HIGHWAY ADMINISTRATION
EASTERN FEDERAL LANDS HIGHWAY DIVISION
STERLING, VIRGINIA

FORT BELVOIR - MULLIGAN ROAD

DRAINAGE PROFILE

HGL Denotes Hydraulic Grade Line

C:\PWworking\PITT\dms60567\H04.dgn

6/19/2008

REG	STATE	PROJECT	SHEET NO.
-	VA	VA-A-AD-48(1)	H5

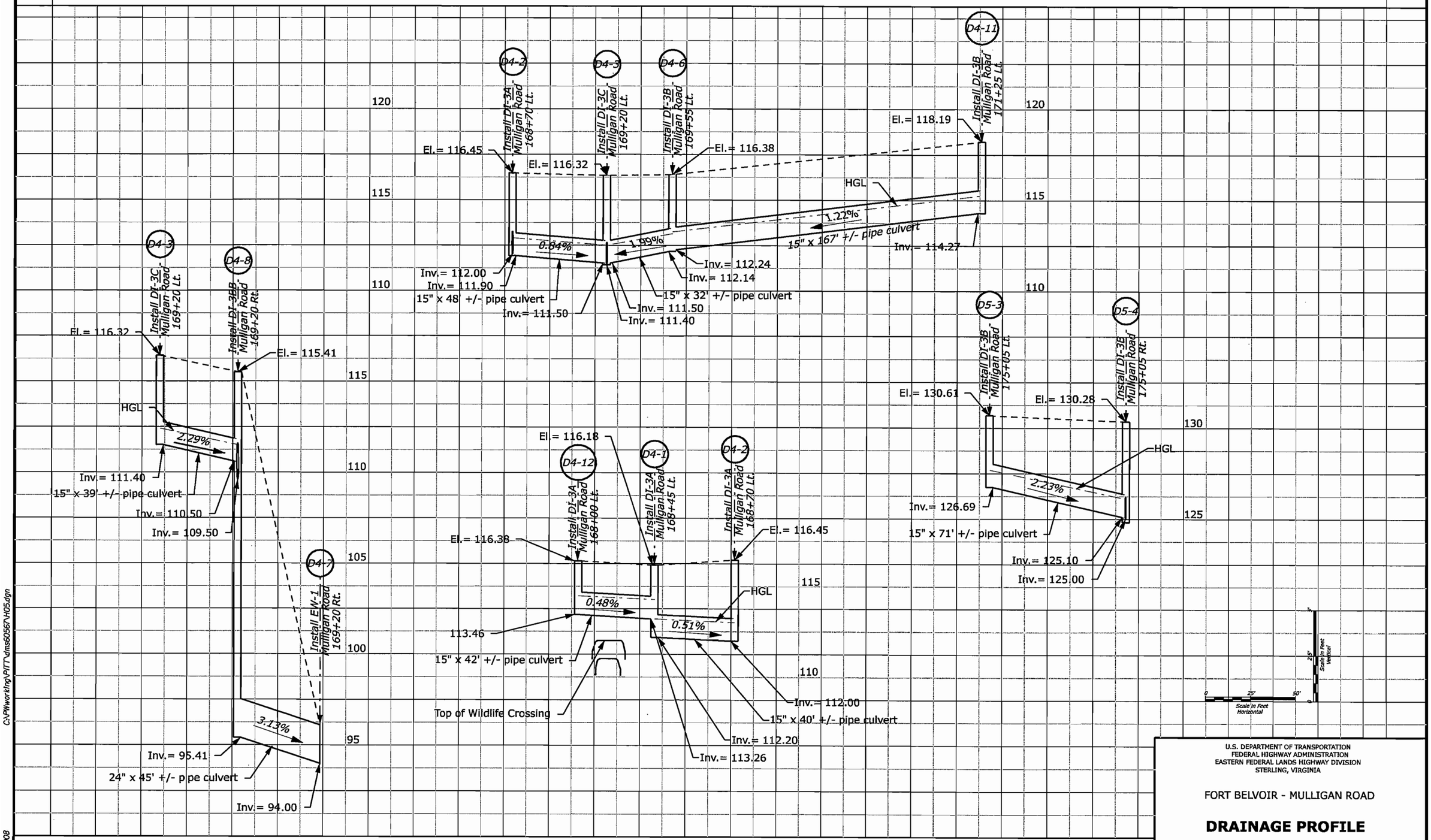

HGL Denotes Hydraulic Grade Line

U.S. DEPARTMENT OF TRANSPORTATION
FEDERAL HIGHWAY ADMINISTRATION
EASTERN FEDERAL LANDS HIGHWAY DIVISION
STERLING, VIRGINIA

FORT BELVOIR - MULLIGAN ROAD

DRAINAGE PROFILE

Sheet 5 of 18

C:\PWworking\PITT\dms60567\H05.dgn

6/19/2008

REG	STATE	PROJECT	SHEET NO.
-	VA	VA-A-AD-48(1)	H6

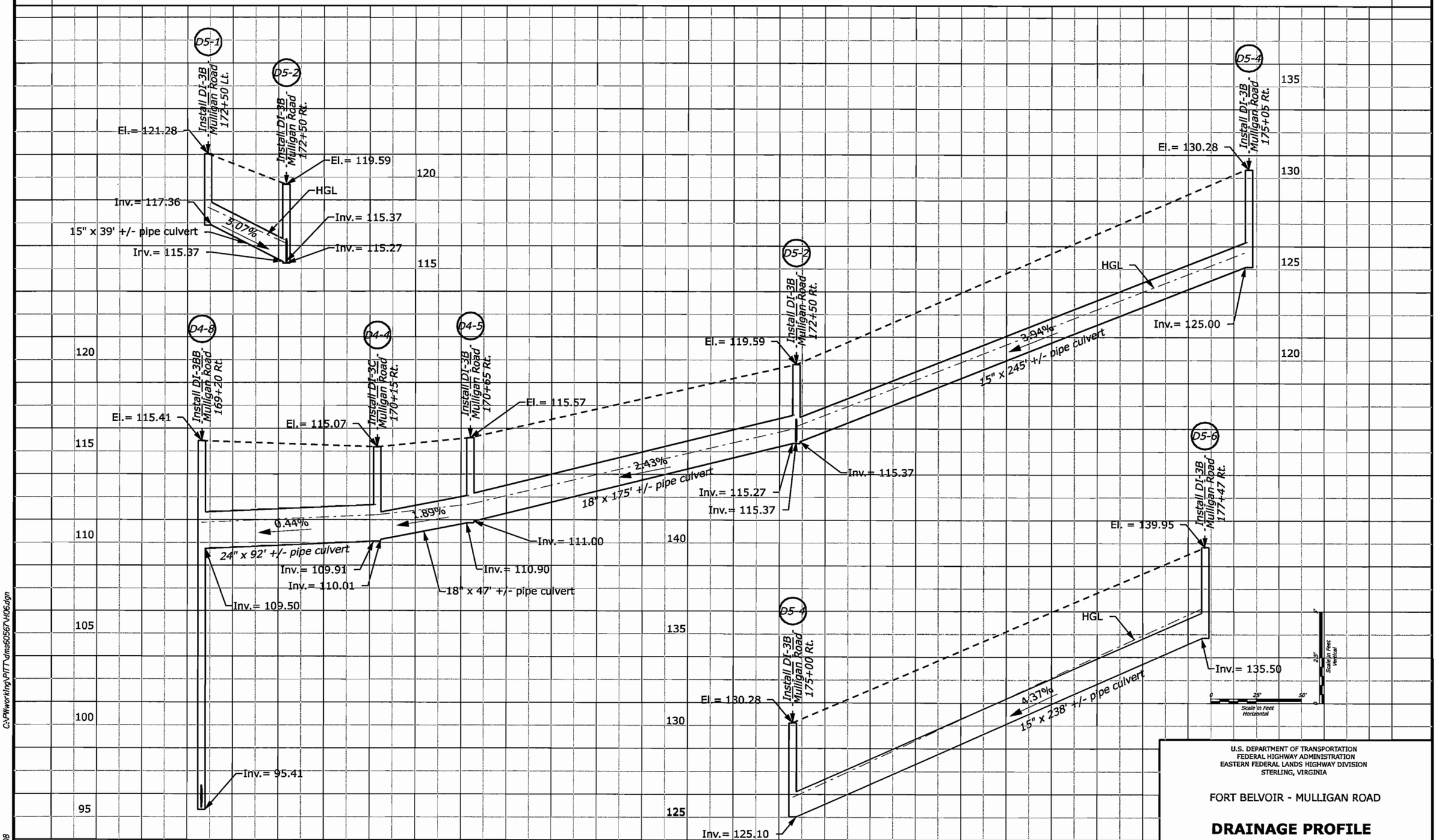

HGL Denotes Hydraulic Grade Line

U.S. DEPARTMENT OF TRANSPORTATION
FEDERAL HIGHWAY ADMINISTRATION
EASTERN FEDERAL LANDS HIGHWAY DIVISION
STERLING, VIRGINIA

FORT BELVOIR - MULLIGAN ROAD

DRAINAGE PROFILE

Sheet 6 of 18

C:\PWworking\PITT\dms6056\H06.dgn

6/19/2008

REG	STATE	PROJECT	SHEET NO.
-	VA	VA-A-AD-48(1)	H7

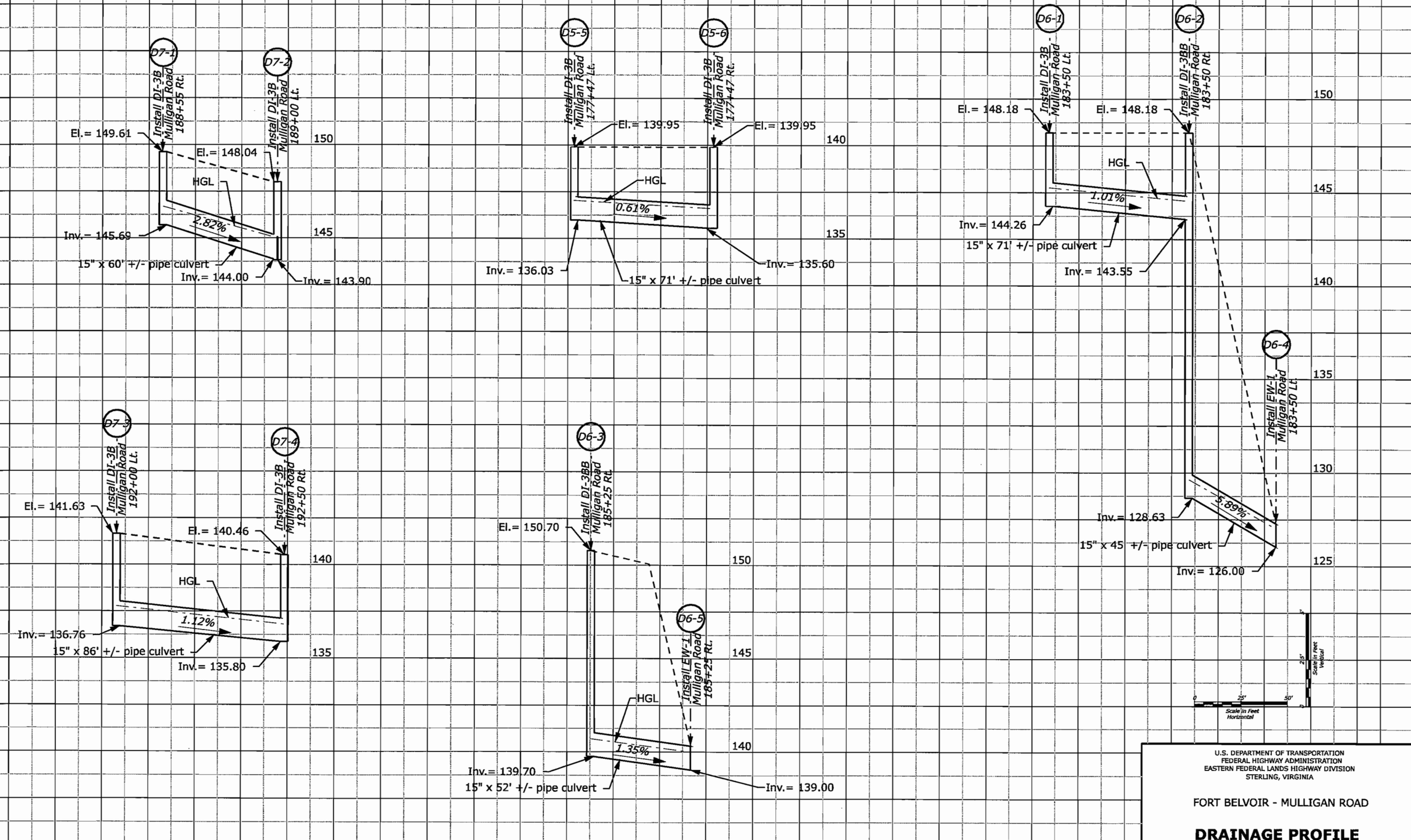

HGL Denotes Hydraulic Grade Line

U.S. DEPARTMENT OF TRANSPORTATION
FEDERAL HIGHWAY ADMINISTRATION
EASTERN FEDERAL LANDS HIGHWAY DIVISION
STERLING, VIRGINIA

FORT BELVOIR - MULLIGAN ROAD

DRAINAGE PROFILE

C:\PWworking\PITT\dms60567\H07.dgn

6/19/2008

REG	STATE	PROJECT	SHEET NO.
-	VA	VA-A-AD-48(1)	H8

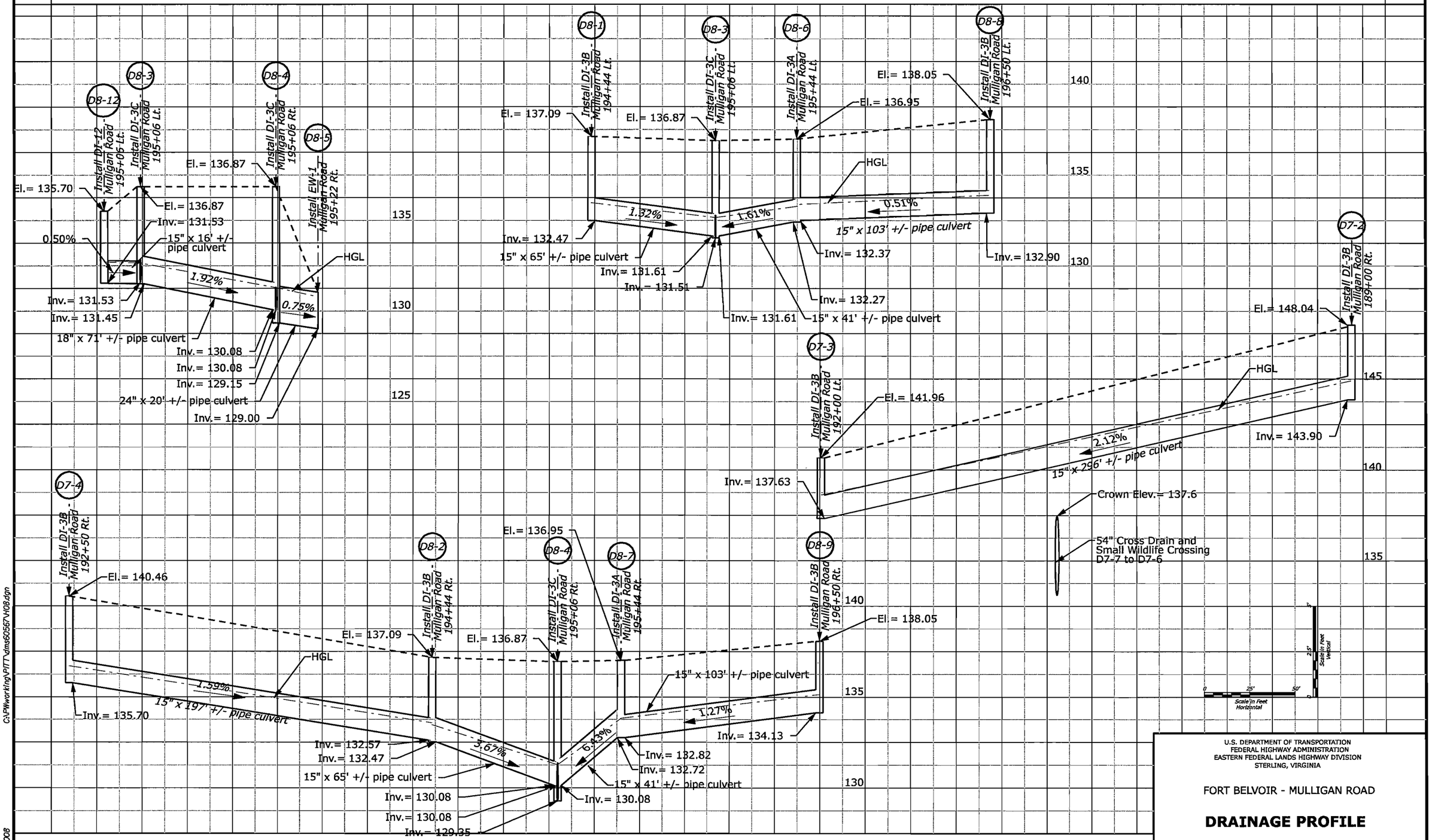

HGL Denotes Hydraulic Grade Line

U.S. DEPARTMENT OF TRANSPORTATION
FEDERAL HIGHWAY ADMINISTRATION
EASTERN FEDERAL LANDS HIGHWAY DIVISION
STERLING, VIRGINIA

FORT BELVOIR - MULLIGAN ROAD

DRAINAGE PROFILE

Sheet 8 of 18

C:\PWworking\PITT\dms60356\H08.dgn

6/19/2008

REG	STATE	PROJECT	SHEET NO.
-	VA	VA-A-AD-48(1)	H9

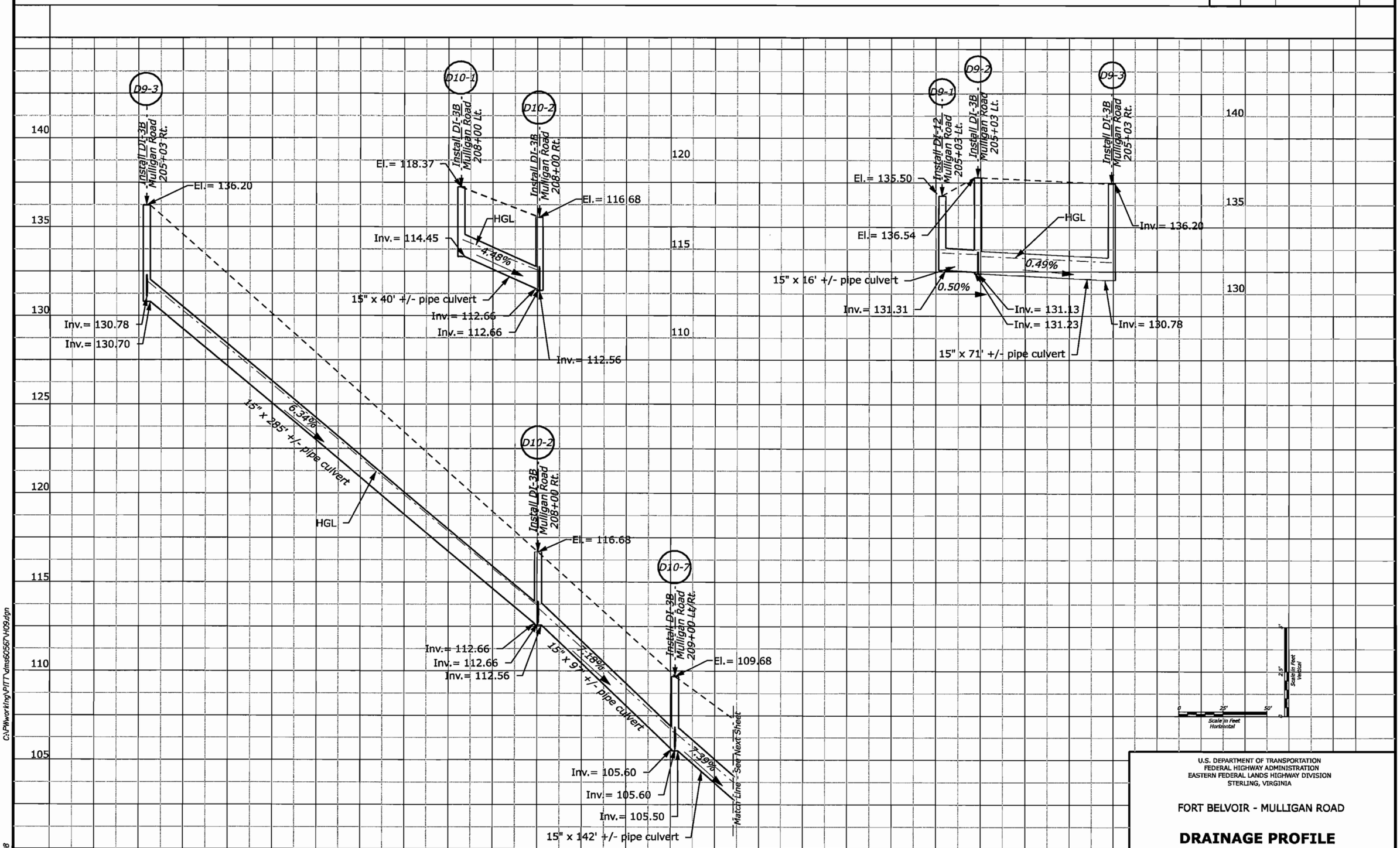

HGL Denotes Hydraulic Grade Line

U.S. DEPARTMENT OF TRANSPORTATION
FEDERAL HIGHWAY ADMINISTRATION
EASTERN FEDERAL LANDS HIGHWAY DIVISION
STERLING, VIRGINIA

FORT BELVOIR - MULLIGAN ROAD

DRAINAGE PROFILE

C:\PWworking\PITT\dms60567\H09.dgn

6/19/2008

REG	STATE	PROJECT	SHEET NO.
-	VA	VA-A-AD-48(1)	H10

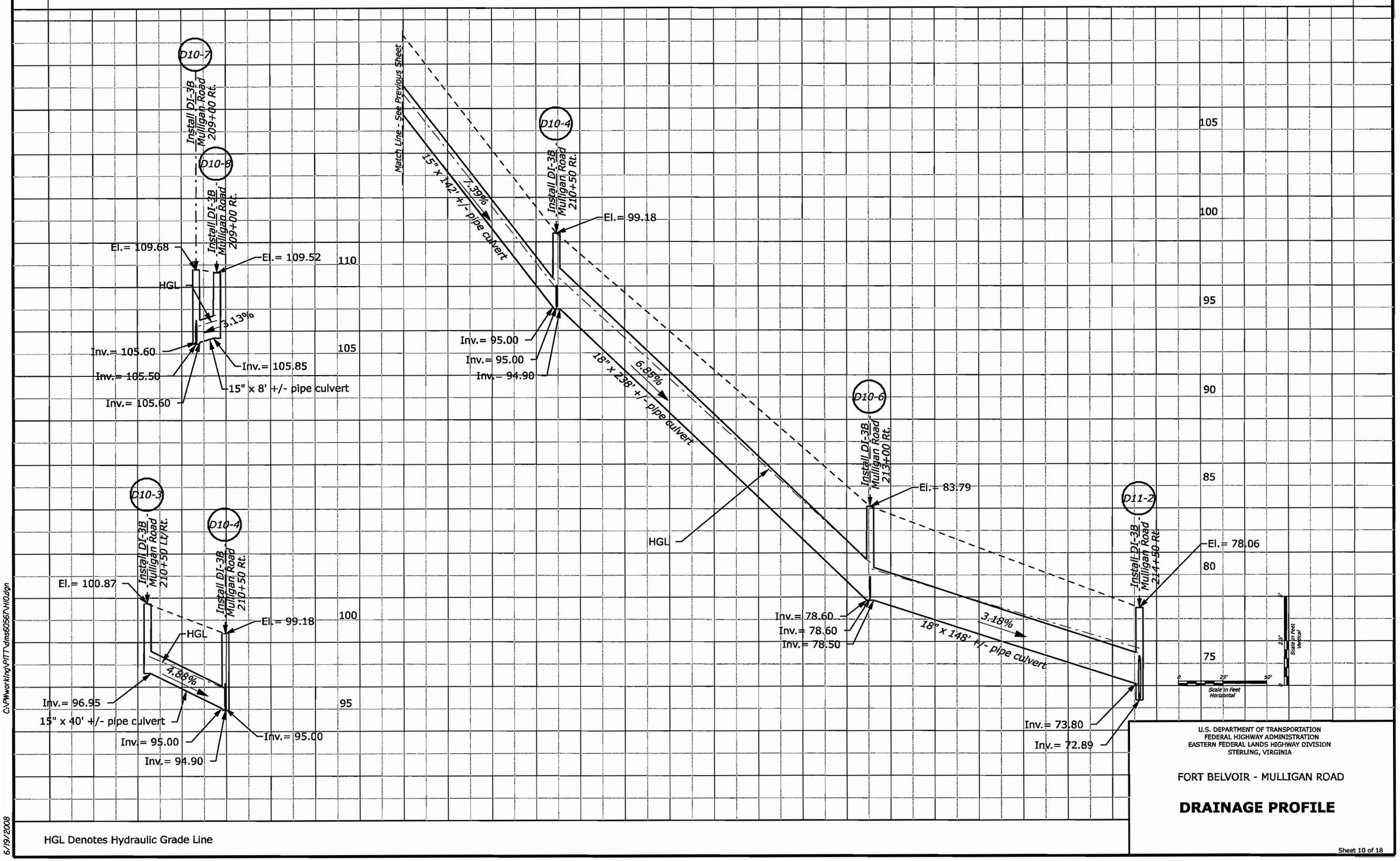

HGL Denotes Hydraulic Grade Line

U.S. DEPARTMENT OF TRANSPORTATION
FEDERAL HIGHWAY ADMINISTRATION
EASTERN FEDERAL LANDS HIGHWAY DIVISION
STERLING, VIRGINIA

FORT BELVOIR - MULLIGAN ROAD

DRAINAGE PROFILE

Sheet 10 of 18

C:\PWworking\PITT\dms60567\H10.dgn

6/19/2008

REG	STATE	PROJECT	SHEET NO.
-	VA	VA-A-AD-48(1)	H11

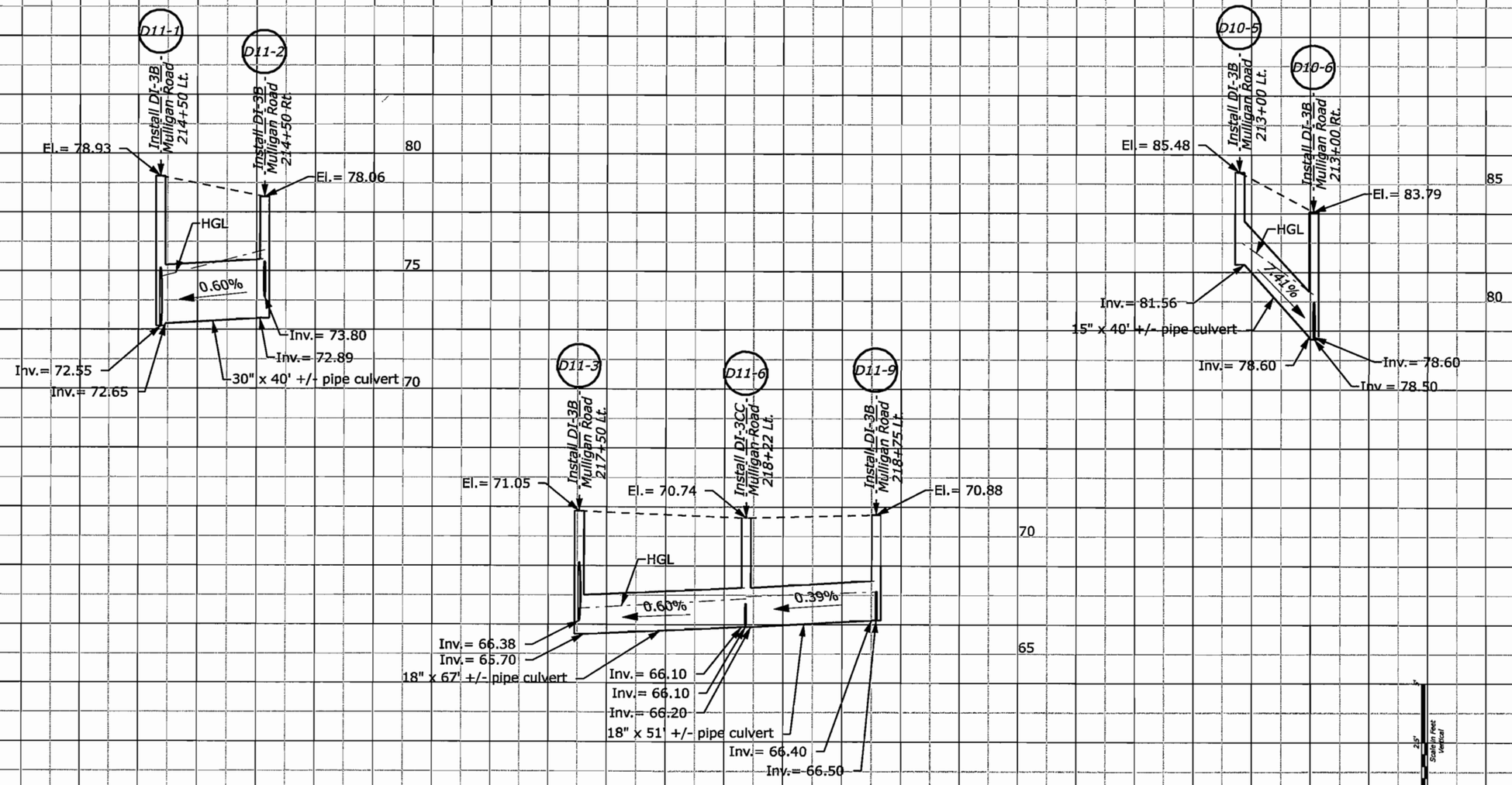

U.S. DEPARTMENT OF TRANSPORTATION
FEDERAL HIGHWAY ADMINISTRATION
EASTERN FEDERAL LANDS HIGHWAY DIVISION
STERLING, VIRGINIA

FORT BELVOIR - MULLIGAN ROAD

DRAINAGE PROFILE

HGL Denotes Hydraulic Grade Line

C:\PWworking\PITT\dms60567\H11.dgn
6/19/2008

REG	STATE	PROJECT	SHEET NO.
-	VA	VA-A-AD-48(1)	H12

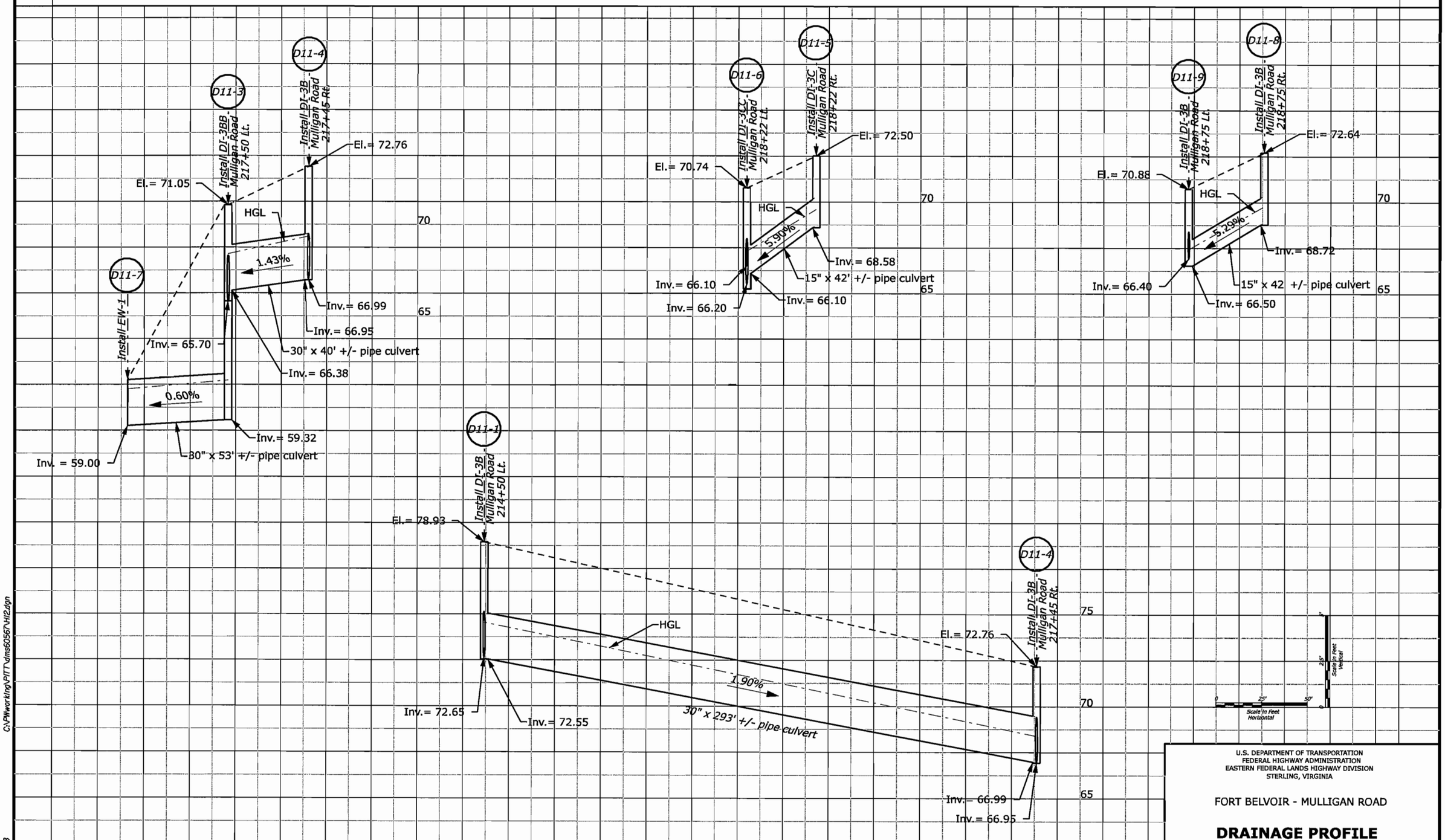

U.S. DEPARTMENT OF TRANSPORTATION
FEDERAL HIGHWAY ADMINISTRATION
EASTERN FEDERAL LANDS HIGHWAY DIVISION
STERLING, VIRGINIA

FORT BELVOIR - MULLIGAN ROAD

DRAINAGE PROFILE

HGL Denotes Hydraulic Grade Line

Sheet 12 of 18

C:\PWworking\PITT\dms60567\H12.dgn

6/19/2008

REG	STATE	PROJECT	SHEET NO.
-	VA	VA-A-AD-48(1)	H13

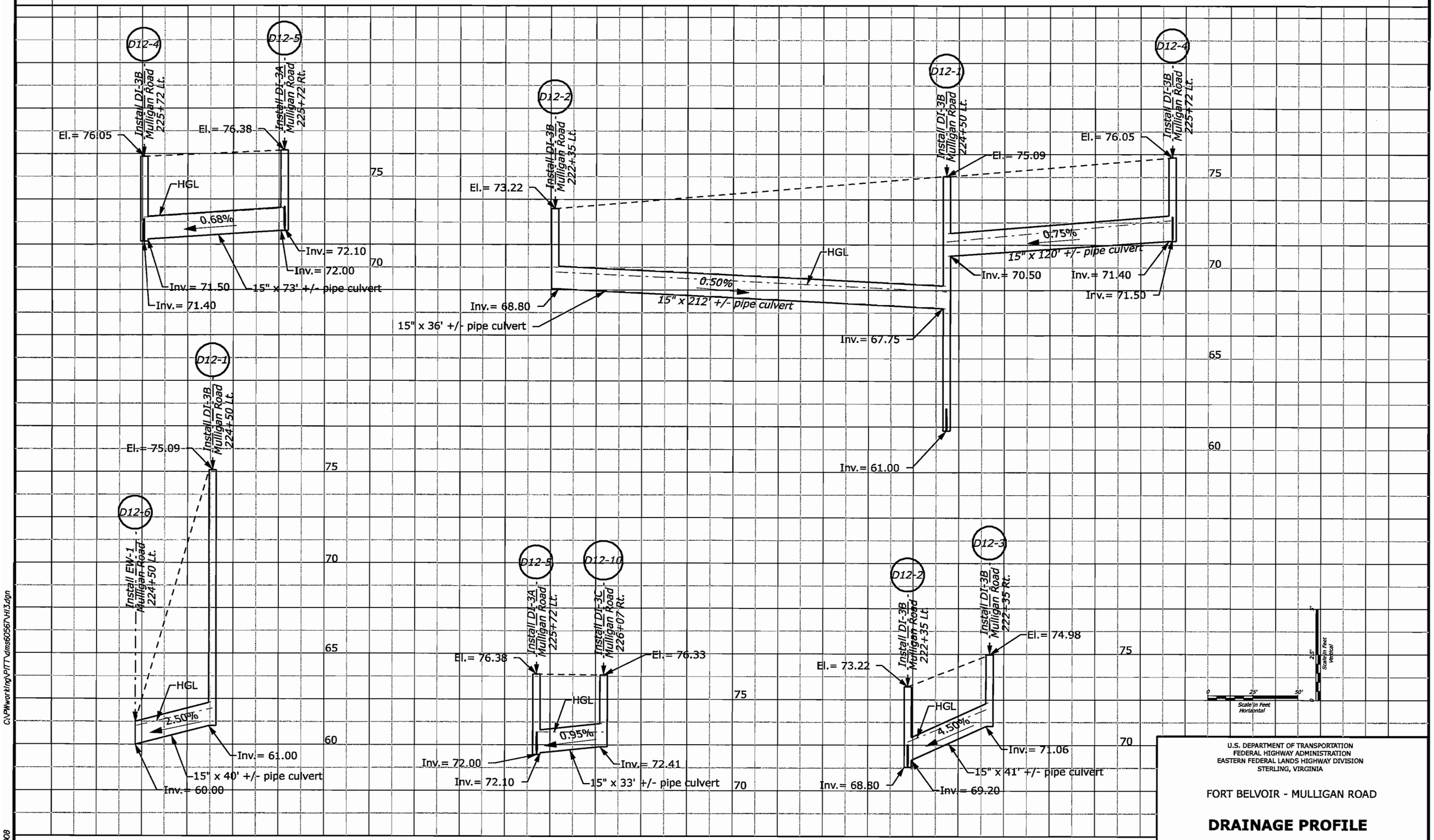

HGL Denotes Hydraulic Grade Line

U.S. DEPARTMENT OF TRANSPORTATION
FEDERAL HIGHWAY ADMINISTRATION
EASTERN FEDERAL LANDS HIGHWAY DIVISION
STERLING, VIRGINIA

FORT BELVOIR - MULLIGAN ROAD

DRAINAGE PROFILE

C:\PWworking\PITT\dms60567\H13.dgn
6/19/2008

REG	STATE	PROJECT	SHEET NO.
-	VA	VA-A-AD-48(1)	H14

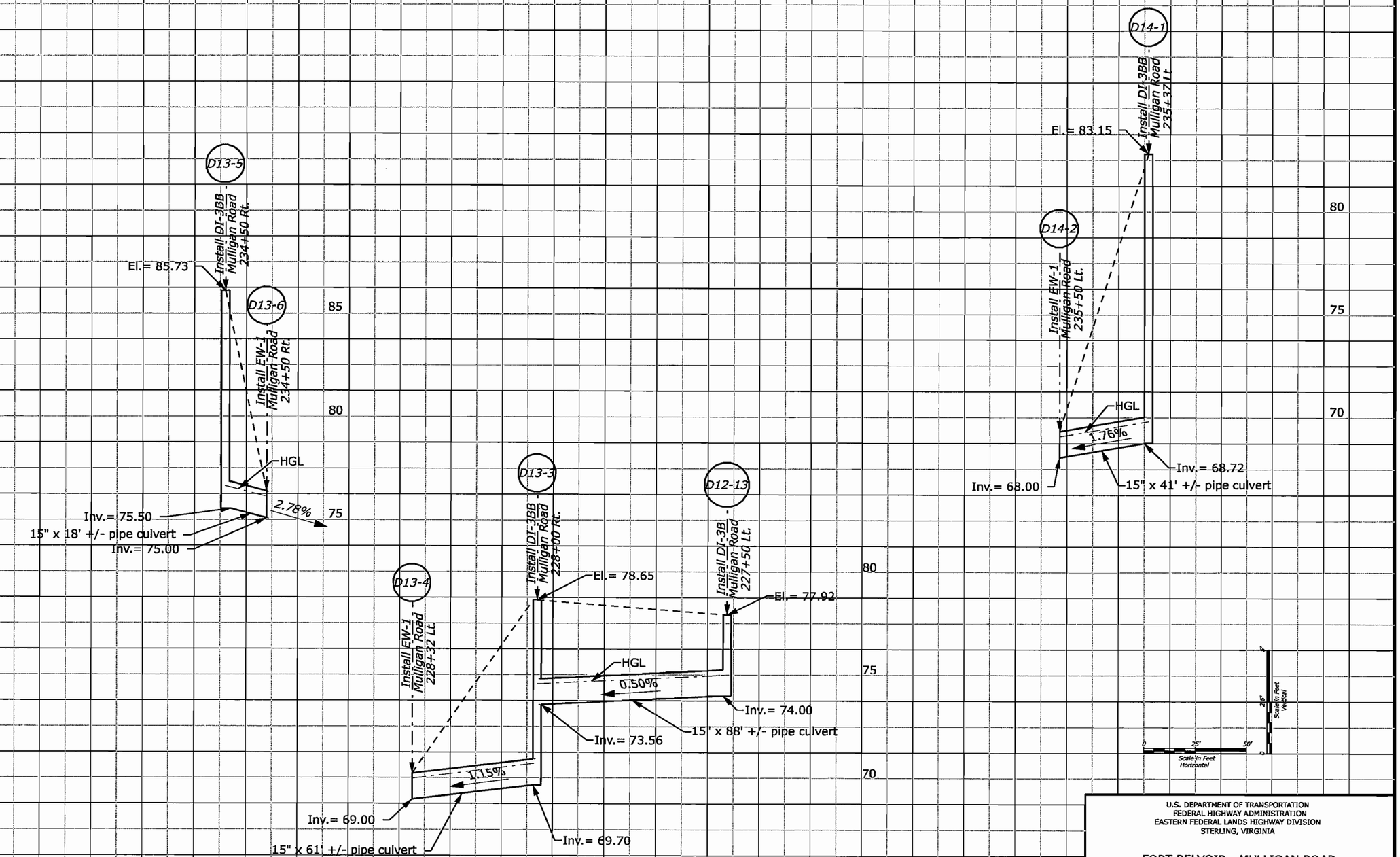

HGL Denotes Hydraulic Grade Line

U.S. DEPARTMENT OF TRANSPORTATION
FEDERAL HIGHWAY ADMINISTRATION
EASTERN FEDERAL LANDS HIGHWAY DIVISION
STERLING, VIRGINIA

FORT BELVOIR - MULLIGAN ROAD

DRAINAGE PROFILE

C:\PWworking\PITT\dms60567\H14.dgn

6/19/2008

REG	STATE	PROJECT	SHEET NO.
-	VA	VA-A-AD-48(1)	H15

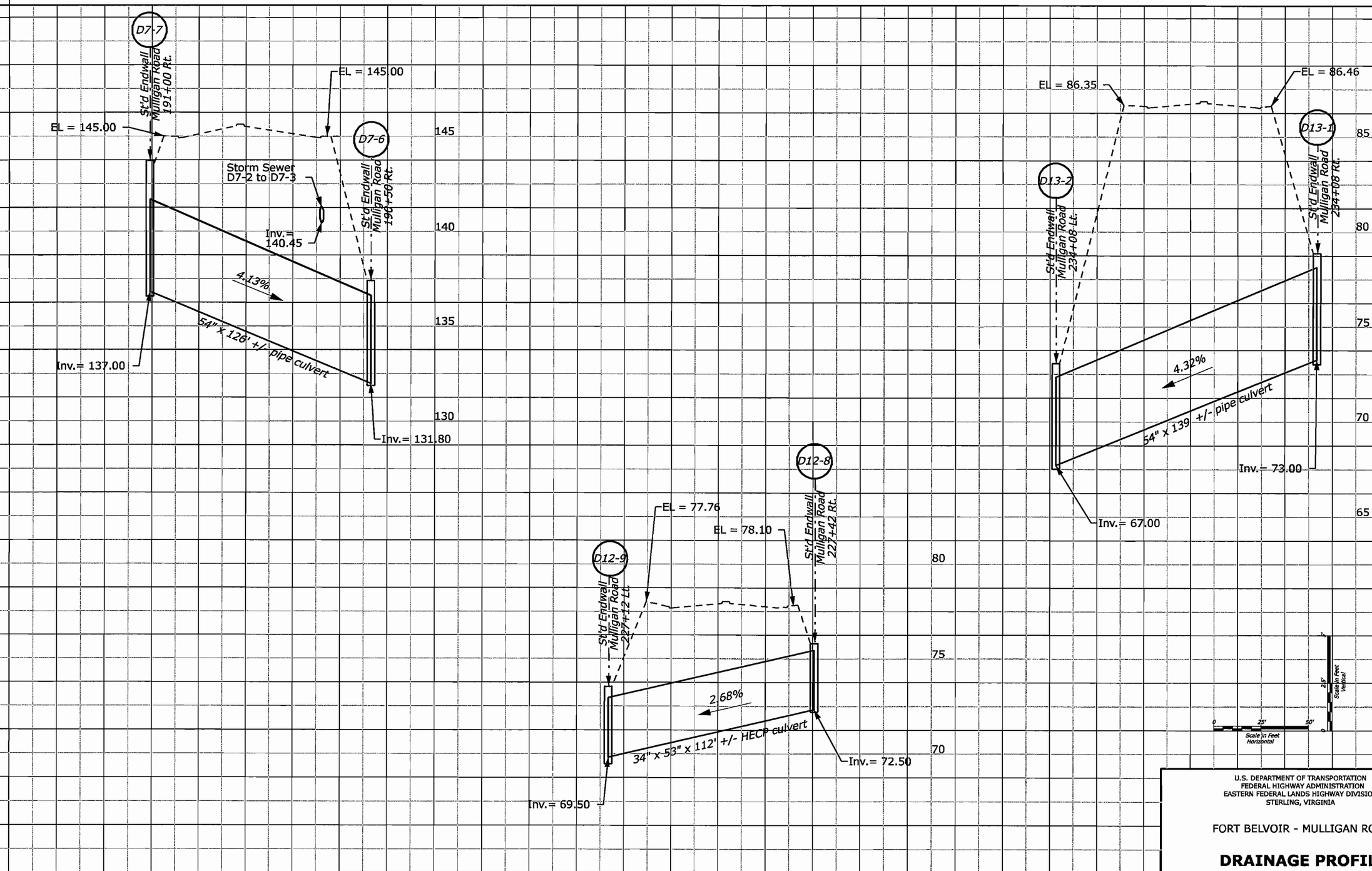

HGL Denotes Hydraulic Grade Line

U.S. DEPARTMENT OF TRANSPORTATION
FEDERAL HIGHWAY ADMINISTRATION
EASTERN FEDERAL LANDS HIGHWAY DIVISION
STERLING, VIRGINIA

FORT BELVOIR - MULLIGAN ROAD

DRAINAGE PROFILE

C:\PWworking\PITT\dms60567\H15.dgn

6/19/2008

REG	STATE	PROJECT	SHEET NO.
-	VA	VA-A-AD-48(1)	H16

PLAN SHEET D1

D1-1
1 ST'D. DI-3B DROP INLET REQ'D
H=3.70ft, L = 8.0ft INV. =31.86
UNDERDRAIN CONNECTION TO BE PROVIDED
IS-1 INLET SHAPING REQ'D

D1-1 TO D1-2
71ft - 15 inch CONC. PIPE REQ'D
INV. (IN) 31.86 INV. (OUT) 31.65

D1-2
1 ST'D. DI-3B DROP INLET REQ'D
H=3.92ft, L = 6.0ft INV. =31.64
UNDERDRAIN CONNECTION TO BE PROVIDED
IS-1 INLET SHAPING REQ'D

D1-2 TO D1-4
137ft - 23 x 14 inch HORIZ. ELLIP CONC. PIPE
INV. (IN) 31.64 INV. (OUT) 31.20

D1-3
1 ST'D. DI-3BB DROP INLET REQ'D
H=10.57ft, L = 8.0ft INV. =30.65
UNDERDRAIN CONNECTIONS TO BE PROVIDED
IS-1 INLET SHAPING REQ'D

D1-3 TO D1-4
88ft - 30 x 19 inch HORIZ. ELLIP CONC. PIPE REQ'D
INV. (IN) 30.65 INV. (OUT) 30.15

D1-4
1 ST'D. DI-3BB DROP INLET REQ'D
H=11.53ft, L = 6.0ft INV. =27.77

UNDERDRAIN CONNECTIONS TO BE PROVIDED
IS-1 INLET SHAPING REQ'D

D1-4 TO D1-5
54ft - 38"x24" HORIZ. ELLIP. CONC. PIPE
INV. (IN) 27.77 INV. (OUT) 27.50
INSTALL TEMP. PIPE PLUG WITH WATER TIGHT CONNECTION

D1-7
1 SEDIMENT BASIN RISER PIPE REQ'D
H = 2.90ft, TOP = 33.13

D1-7 TO D1-6
136ft - 18 inch CONC. PIPE REQ'D
INV. (IN) 31.00 INV. (OUT) 30.35

D1-8
1 ST'D. DI-12 DROP INLET REQ'D
H=4.17ft, L = 6.0ft INV. =38.52
BACKUP BERM REQD.

D1-8 TO D1-9
176ft - 18 inch CONC. PIPE REQ'D
INV. (IN) 38.52 INV. (OUT) 33.10

D1-9
1 ST'D. DI-1 DROP INLET REQ'D
H=4.24ft, INV. =31.72
IS-1 INLET SHAPING REQ'D

D1-9 TO D1-10
68ft - 23 x 14 inch HORIZ. ELLIP CONC. PIPE REQ'D
INV. (IN) 31.72 INV. (OUT) 31.00

D1-10
1 ST'D. DI-1 DROP INLET REQ'D
H=3.39ft, INV. =31.00
IS-1 INLET SHAPING REQ'D

D1-10 TO D1-11
100ft - 24 inch CONC. PIPE REQ'D
INV. (IN) 31.00 INV. (OUT) 30.35
1 ST'D ES-1, END SECTION REQ'D

PLAN SHEET D2

D2-1
1 ST'D. DI-3B DROP INLET REQ'D
H=5.20ft, L = 8.0ft INV. =47.21

UNDERDRAIN CONNECTION TO BE PROVIDED
IS-1 INLET SHAPING REQ'D

D2-1 TO D1-3
248ft - 18 inch CONC. PIPE REQ'D
INV. (IN) 47.21 INV. (OUT) 36.12

D2-2
1 ST'D. DI-3B DROP INLET REQ'D
H=5.17ft, L = 8.0ft INV. =61.00

UNDERDRAIN CONNECTION TO BE PROVIDED
IS-1 INLET SHAPING REQ'D

D2-2 TO D2-1
297ft - 15 inch CONC. PIPE REQ'D
INV. (IN) 61.00 INV. (OUT) 47.31

D2-3
1 ST'D. DI-3B DROP INLET REQ'D
H=3.92ft, L = 14.0ft INV. =63.50

D2-3 TO D2-2
40ft - 15 inch CONC. PIPE REQ'D
INV. (IN) 63.50 INV. (OUT) 61.10

PLAN SHEET D3

D3-1
1 ST'D. DI-3B DROP INLET REQ'D
H=5.20ft, L = 10.0ft INV. =75.00

UNDERDRAIN CONNECTION TO BE PROVIDED
IS-1 INLET SHAPING REQ'D

D3-1 TO D2-2
297ft - 15 inch CONC. PIPE REQ'D

(914 ft RADIUS WITH OPEN JOINT - USING 8 ft
PIPE JOINT LENGTHS WITH RUBBER GASKETS)
JOINTS ARE TO BE OPENED A MAXIMUM OF 25%
OF THE SPIGOT OR
TONGUE LENGTH
INV. (IN) 75.00 INV. (OUT) 61.10

D3-2
1 ST'D. DI-3B DROP INLET REQ'D
H=3.92ft, L = 8.0ft INV. =77.47

D3-2 TO D3-1
40ft - 15 inch CONC. PIPE REQ'D
INV. (IN) 77.47 INV. (OUT) 75.10

D3-3
1 ST'D. DI-3B DROP INLET REQ'D
H=5.30ft, L = 10.0ft INV. =93.00

UNDERDRAIN CONNECTION TO BE PROVIDED
IS-1 INLET SHAPING REQ'D

D3-3 TO D3-1
291ft - 15 inch CONC. PIPE REQ'D

(914 ft RADIUS WITH OPEN JOINT - USING 8 ft
PIPE JOINT LENGTHS WITH RUBBER GASKETS)
JOINTS ARE TO BE OPENED A MAXIMUM OF 25%
OF THE SPIGOT OR
TONGUE LENGTH
INV. (IN) 93.00 INV. (OUT) 75.10

D3-4
1 ST'D. DI-3B DROP INLET REQ'D
H=3.92ft, L = 12.0ft INV. =94.70

D3-4 TO D3-3
71ft - 15 inch CONC. PIPE REQ'D
INV. (IN) 94.70 INV. (OUT) 93.10

PLAN SHEET D4

D4-1
1 ST'D. DI-3A DROP INLET REQ'D
H=3.98ft, INV. =112.20

2 UNDERDRAIN CONNECTIONS TO BE PROVIDED
IS-1 INLET SHAPING REQ'D

D4-1 TO D4-2
40ft - 15 inch CONC. PIPE REQ'D
INV. (IN) 112.20 INV. (OUT) 112.00

D4-2
1 ST'D. DI-3A DROP INLET REQ'D
H=4.55ft, INV. =111.90
IS-1 INLET SHAPING REQ'D

D4-2 TO D4-3
48ft - 15 inch CONC. PIPE REQ'D
INV. (IN) 111.90 INV. (OUT) 111.50

D4-3
1 ST'D. DI-3C DROP INLET REQ'D
H=4.92ft, L = 6.0ft INV. =111.40

UNDERDRAIN CONNECTION TO BE PROVIDED
IS-1 INLET SHAPING REQ'D

D4-3 TO D4-8
39ft - 15 inch CONC. PIPE REQ'D
INV. (IN) 111.40 INV. (OUT) 110.50

D4-4
1 ST'D. DI-3C DROP INLET REQ'D
H=5.16ft, L = 6.0ft INV. =109.91

2 UNDERDRAIN CONNECTIONS TO BE PROVIDED
IS-1 INLET SHAPING REQ'D

D4-4 TO D4-8
92ft - 24 inch CONC. PIPE REQ'D

(914 ft RADIUS WITH OPEN JOINT - USING 8 ft
PIPE JOINT LENGTHS WITH RUBBER GASKETS)
JOINTS ARE TO BE OPENED A MAXIMUM OF 25%
OF THE SPIGOT OR
TONGUE LENGTH
INV. (IN) 109.91 INV. (OUT) 109.50

D4-5
1 ST'D. DI-3B DROP INLET REQ'D
H=4.67ft, L = 4.0ft INV. =110.90

UNDERDRAIN CONNECTION TO BE PROVIDED
IS-1 INLET SHAPING REQ'D

D4-5 TO D4-4
47ft - 18 inch CONC. PIPE REQ'D

(914 ft RADIUS WITH OPEN JOINT - USING 8 ft
PIPE JOINT LENGTHS WITH RUBBER GASKETS)
JOINTS ARE TO BE OPENED A MAXIMUM OF 25%
OF THE SPIGOT OR
TONGUE LENGTH
INV. (IN) 110.90 INV. (OUT) 110.01

D4-6
1 ST'D. DI-3B DROP INLET REQ'D
H=4.24ft, L = 6.0ft INV. =112.14
IS-1 INLET SHAPING REQ'D

D4-6 TO D4-3
32ft - 15 inch CONC. PIPE REQ'D
INV. (IN) 112.14 INV. (OUT) 111.50

D4-8
1 ST'D. DI-3BB DROP INLET REQ'D
H=20.00ft, L = 4.0ft INV. =95.41
SL-1 SAFETY SLAB REQD.

4 UNDERDRAIN CONNECTIONS TO BE PROVIDED
IS-1 INLET SHAPING REQ'D

D4-8 TO D4-7
45ft - 24 inch CONC. PIPE REQ'D
INV. (IN) 95.41 INV. (OUT) 94.00
1 ST'D EW-1, END WALL REQ'D

D4-9
1 ST'D. SWM-1 STRUCTURE REQ'D
H = 6.50ft, TOP = 97.50

INV. 2-INCH WATER QUALITY ORIFICE = 94.0

D4-9 TO D4-10
43ft - 18 inch CONC. PIPE REQ'D
INV. (IN) 93.81 INV. (OUT) 92.39
1 ST'D EW-1, END WALL REQ'D

D4-11
1 ST'D. DI-3B DROP INLET REQ'D
H=3.92ft, L = 8.0m INV. =114.27

D4-11 TO D4-6
167ft - 15 inch CONC. PIPE REQ'D

(914 ft RADIUS WITH OPEN JOINT - USING 8 ft
PIPE JOINT LENGTHS WITH RUBBER GASKETS)
JOINTS ARE TO BE OPENED A MAXIMUM OF 25%
OF THE SPIGOT OR
TONGUE LENGTH
INV. (IN) 114.27 INV. (OUT) 112.24

D4-12
1 ST'D. DI-3A DROP INLET REQ'D
H=2.92ft, INV. =113.46

D4-12 TO D4-1
42ft - 15 inch CONC. PIPE REQ'D
INV. (IN) 113.46 INV. (OUT) 113.26

PLAN SHEET D5

D5-1
1 ST'D. DI-3B DROP INLET REQ'D
H=3.92ft, L = 12.0ft INV. =117.36

D5-1 TO D5-2
39ft - 15 inch CONC. PIPE REQ'D
INV. (IN) 117.36 INV. (OUT) 115.37

D5-2
1 ST'D. DI-3B DROP INLET REQ'D
H=4.32ft, L = 6.0ft INV. =115.27

UNDERDRAIN CONNECTION TO BE PROVIDED

D5-2 TO D4-5
175ft - 18 inch CONC. PIPE REQ'D

(914 ft RADIUS WITH OPEN JOINT - USING 8 ft
PIPE JOINT LENGTHS WITH RUBBER GASKETS)
JOINTS ARE TO BE OPENED A MAXIMUM OF 25%
OF THE SPIGOT OR
TONGUE LENGTH
INV. (IN) 115.27 INV. (OUT) 111.00

D5-3
1 ST'D. DI-3B DROP INLET REQ'D
H=3.92ft, L = 12.0ft INV. =126.69

UNDERDRAIN CONNECTION TO BE PROVIDED
IS-1 INLET SHAPING REQ'D

D5-3 TO D5-4
71ft - 15 inch CONC. PIPE REQ'D
INV. (IN) 126.69 INV. (OUT) 125.10

D5-4
1 ST'D. DI-3B DROP INLET REQ'D
H=5.28ft, L = 6.0ft INV. =125.00

UNDERDRAIN CONNECTION TO BE PROVIDED
IS-1 INLET SHAPING REQ'D

D5-4 TO D5-2
245ft - 15 inch CONC. PIPE REQ'D

(914 ft RADIUS WITH OPEN JOINT - USING 8 ft
PIPE JOINT LENGTHS WITH RUBBER GASKETS)
JOINTS ARE TO BE OPENED A MAXIMUM OF 25%
OF THE SPIGOT OR
TONGUE LENGTH
INV. (IN) 125.00 INV. (OUT) 115.37

D5-5
1 ST'D. DI-3B DROP INLET REQ'D
H=3.92ft, L = 8.0ft INV. =136.03

UNDERDRAIN CONNECTION TO BE PROVIDED
IS-1 INLET SHAPING REQ'D

D5-5 TO D5-6
71ft - 15 inch CONC. PIPE REQ'D
INV. (IN) 136.03 INV. (OUT) 135.60

D5-6
1 ST'D. DI-3B DROP INLET REQ'D
H=4.45ft, L = 8.0ft INV. =135.50

UNDERDRAIN CONNECTION TO BE PROVIDED
IS-1 INLET SHAPING REQ'D

D5-6 TO D5-4
238ft - 15 inch CONC. PIPE REQ'D
INV. (IN) 135.50 INV. (OUT) 125.10

PLAN SHEET D6

D6-1
1 ST'D. DI-3B DROP INLET REQ'D
H=3.92ft, L = 6.0ft INV. =144.26

UNDERDRAIN CONNECTION TO BE PROVIDED

D6-1 TO D6-2
71ft - 15 inch CONC. PIPE REQ'D
INV. (IN) 144.26 INV. (OUT) 143.55

D6-2
1 ST'D. DI-3BB DROP INLET REQ'D
H=19.55ft, L = 6.0ft INV. =128.63
SL-1 SAFETY SLAB REQD.

2 UNDERDRAIN CONNECTIONS TO BE PROVIDED
IS-1 INLET SHAPING REQ'D

D6-2 TO D6-4
45ft - 15 inch CONC. PIPE REQ'D
INV. (IN) 128.63 INV. (OUT) 126.00
1 ST'D EW-1, END WALL REQ'D

D6-3
1 ST'D. DI-3BB DROP INLET REQ'D
H=11.00ft, L = 4.0ft INV. =139.70

D6-3 TO D6-5
52ft - 15 inch CONC. PIPE REQ'D
INV. (IN) 139.70 INV. (OUT) 139.00
1 ST'D EW-1, END WALL REQ'D

NOTE: ALL CONCRETE PIPES WILL CONFORM TO AASHTO M170
ALL RUBBER GASKETS WILL CONFORM TO ASTM C-443

U.S. DEPARTMENT OF TRANSPORTATION
FEDERAL HIGHWAY ADMINISTRATION
EASTERN FEDERAL LANDS HIGHWAY DIVISION
STERLING, VIRGINIA

FORT BELVOIR - MULLIGAN ROAD

DRAINAGE DESCRIPTION

6/18/2008 3:33:50 PM C:\PWworking\PITT\dms60567\H16.dgn

REG	STATE	PROJECT	SHEET NO.
-	VA	VA-A-AD-48(1)	H17

PLAN SHEET D7

D7-1
1 ST'D. DI-3B DROP INLET REQ'D
H=3.90ft, L = 8.0ft INV. =145.69

D7-1 TO D7-2
60ft - 15 inch CONC. PIPE REQ'D
INV. (IN) 145.69 INV. (OUT) 144.00

D7-2
1 ST'D. DI-3B DROP INLET REQ'D
H=4.10ft, L = 4.0ft INV. =143.90

UNDERDRAIN CONNECTION TO BE PROVIDED
IS-1 INLET SHAPING REQ'D

D7-2 TO D7-3
296ft - 15 inch CONC. PIPE REQ'D
INV. (IN) 143.90 INV. (OUT) 137.63

D7-3
1 ST'D. DI-3B DROP INLET REQ'D
H=4.87ft, L = 6.0ft INV. =136.76

UNDERDRAIN CONNECTION TO BE PROVIDED

D7-3 TO D7-4
86ft - 15 inch CONC. PIPE REQ'D
INV. (IN) 136.76 INV. (OUT) 135.80

D7-4
1 ST'D. DI-3B DROP INLET REQ'D
H=4.76ft, L = 6.0ft INV. =135.70

UNDERDRAIN CONNECTION TO BE PROVIDED
IS-1 INLET SHAPING REQ'D

D7-4 TO D8-2
197ft - 15 inch CONC. PIPE REQ'D
INV. (IN) 135.70 INV. (OUT) 132.57

D7-7 TO D7-6
126ft - 54 inch CONC. PIPE REQ'D
INV. (IN) 137.00 INV. (OUT) 131.80
2 ST'D EW-2, ENDWALL REQ'D

PLAN SHEET D8

D8-1
1 ST'D. DI-3B DROP INLET REQ'D
H=4.62ft, L = 4.0ft INV. =132.47

UNDERDRAIN CONNECTION TO BE PROVIDED

D8-1 TO D8-3
65ft - 15 inch CONC. PIPE REQ'D
INV. (IN) 132.47 INV. (OUT) 131.61

D8-2
1 ST'D. DI-3B DROP INLET REQ'D
H=4.62ft, L = 4.0ft INV. =132.47

UNDERDRAIN CONNECTION TO BE PROVIDED
IS-1 INLET SHAPING REQ'D

D8-2 TO D8-4
65ft - 15 inch CONC. PIPE REQ'D
INV. (IN) 132.47 INV. (OUT) 130.08

D8-3
1 ST'D. DI-3C DROP INLET REQ'D
H=5.42ft, L = 6.0ft INV. =131.45

2 UNDERDRAIN CONNECTIONS TO BE PROVIDED
IS-1 INLET SHAPING REQ'D

D8-3 TO D8-4
71ft - 18 inch CONC. PIPE REQ'D
INV. (IN) 131.45 INV. (OUT) 130.08

D8-4
1 ST'D. DI-3C DROP INLET REQ'D
H=7.72ft, L = 6.0ft INV. =129.15

4 UNDERDRAIN CONNECTIONS TO BE PROVIDED
IS-1 INLET SHAPING REQ'D

D8-4 TO D8-5
20ft - 24 inch CONC. PIPE REQ'D
INV. (IN) 129.15 INV. (OUT) 129.00
1 ST'D EW-1, END WALL REQ'D

D8-6
1 ST'D. DI-3A DROP INLET REQ'D
H=4.68ft, INV. =132.27

UNDERDRAIN CONNECTION TO BE PROVIDED
IS-1 INLET SHAPING REQ'D

D8-6 TO D8-3
41ft - 15 inch CONC. PIPE REQ'D
INV. (IN) 132.27 INV. (OUT) 131.61

D8-7
1 ST'D. DI-3A DROP INLET REQ'D
H=4.23ft, INV. =132.72

UNDERDRAIN CONNECTION TO BE PROVIDED
IS-1 INLET SHAPING REQ'D

D8-7 TO D8-4
41ft - 15 inch CONC. PIPE REQ'D
INV. (IN) 132.72 INV. (OUT) 130.08

D8-8
1 ST'D. DI-3B DROP INLET REQ'D
H=5.15ft, L = 8.0ft INV. =132.90

UNDERDRAIN CONNECTION TO BE PROVIDED

D8-8 TO D8-6
103ft - 15 inch CONC. PIPE REQ'D
INV. (IN) 132.90 INV. (OUT) 132.37

D8-9
1 ST'D. DI-3B DROP INLET REQ'D
H=3.92ft, L = 8.0ft INV. =134.13

UNDERDRAIN CONNECTION TO BE PROVIDED

D8-9 TO D8-7
103ft - 15 inch CONC. PIPE REQ'D
INV. (IN) 134.13 INV. (OUT) 132.82

D8-12
1 ST'D. DI-12 DROP INLET REQ'D
H=4.17ft, L = 4.0ft INV. =131.53

D8-12 TO D8-3
16ft - 15 inch CONC. PIPE REQ'D
INV. (IN) 131.53 INV. (OUT) 131.45

D8-10
1 ST'D. DI-SWM-1 STRUCTURE REQ'D
H = 6.60ft, TOP = 132.60

INV. 2-INCH WATER QUALITY ORIFICE = 129.00

D8-10 TO D8-11
48ft - 24 inch CONC. PIPE REQ'D
INV. (IN) 128.90 INV. (OUT) 126.00
1 ST'D EW-1, END WALL REQ'D

PLAN SHEET D9

D9-1
1 ST'D. DI-12 DROP INLET REQ'D
H=4.19ft, L = 4.0ft INV. =131.31

D9-1 TO D9-2
16ft - 15 inch CONC. PIPE REQ'D
INV. (IN) 131.31 INV. (OUT) 131.23

D9-2
1 ST'D. DI-3B DROP INLET REQ'D
H=5.41ft, L = 10.0ft INV. =131.13

UNDERDRAIN CONNECTION TO BE PROVIDED

D9-2 TO D9-3
71ft - 15 inch CONC. PIPE REQ'D
INV. (IN) 131.13 INV. (OUT) 130.78

D9-3
1 ST'D. DI-3B DROP INLET REQ'D
H=5.50ft, L = 10.0ft INV. =130.70

UNDERDRAIN CONNECTION TO BE PROVIDED
IS-1 INLET SHAPING REQ'D

D9-3 TO D10-2
285ft - 15 inch CONC. PIPE REQ'D

(914 ft RADIUS WITH OPEN JOINT - USING 8 ft
PIPE JOINT LENGTHS WITH RUBBER GASKETS)
JOINTS ARE TO BE OPENED A MAXIMUM OF 25%
OF THE SPIGOT OR
TONGUE LENGTH
INV. (IN) 130.70 INV. (OUT) 112.66

PLAN SHEET D10

D10-1
1 ST'D. DI-3B DROP INLET REQ'D
H=3.92ft, L = 8.0ft INV. =114.45

D10-1 TO D10-2
40ft - 15 inch CONC. PIPE REQ'D
INV. (IN) 114.45 INV. (OUT) 112.66

D10-2
1 ST'D. DI-3B DROP INLET REQ'D
H=4.12ft, L = 8.0ft INV. =112.56

UNDERDRAIN CONNECTION TO BE PROVIDED
IS-1 INLET SHAPING REQ'D

D10-2 TO D10-7
97ft - 15 inch CONC. PIPE REQ'D

(914 ft RADIUS WITH OPEN JOINT - USING 8 ft
PIPE JOINT LENGTHS WITH RUBBER GASKETS)
JOINTS ARE TO BE OPENED A MAXIMUM OF 25%
OF THE SPIGOT OR
TONGUE LENGTH
INV. (IN) 112.56 INV. (OUT) 105.60

D10-3
1 ST'D. DI-3B DROP INLET REQ'D
H=3.92ft, L = 8.0ft INV. =96.95

D10-3 TO D10-4
40ft - 15 inch CONC. PIPE REQ'D
INV. (IN) 96.95 INV. (OUT) 95.00

D10-4
1 ST'D. DI-3B DROP INLET REQ'D
H=4.28ft, L = 8.0ft INV. =94.90

UNDERDRAIN CONNECTION TO BE PROVIDED
IS-1 INLET SHAPING REQ'D

D10-4 TO D10-6
238ft - 18 inch CONC. PIPE REQ'D

(914 ft RADIUS WITH OPEN JOINT - USING 8 ft
PIPE JOINT LENGTHS WITH RUBBER GASKETS)
JOINTS ARE TO BE OPENED A MAXIMUM OF 25%
OF THE SPIGOT OR
TONGUE LENGTH
INV. (IN) 94.90 INV. (OUT) 78.60

D10-5
1 ST'D. DI-3B DROP INLET REQ'D
H=3.92ft, L = 10.0ft INV. =81.56

D10-5 TO D10-6
40ft - 15 inch CONC. PIPE REQ'D
INV. (IN) 81.56 INV. (OUT) 78.60

D10-6
1 ST'D. DI-3B DROP INLET REQ'D
H=5.29ft, L = 6.0ft INV. =78.50

UNDERDRAIN CONNECTION TO BE PROVIDED
IS-1 INLET SHAPING REQ'D

D10-6 TO D11-2
148ft - 18 inch CONC. PIPE REQ'D

(914 ft RADIUS WITH OPEN JOINT - USING 8 ft
PIPE JOINT LENGTHS WITH RUBBER GASKETS)
JOINTS ARE TO BE OPENED A MAXIMUM OF 25%
OF THE SPIGOT OR
TONGUE LENGTH
INV. (IN) 78.50 INV. (OUT) 73.80

D10-8
1 ST'D. DI-5 DROP INLET REQ'D
TYPE I, GRATE A REQ'D
TYPE C1 COVER
H = 3.67ft, INV. = 105.85

D10-8 TO D10-7
4ft - 15 inch CONC. PIPE REQ'D
INV. (IN) 105.85 INV. (OUT) 105.60

D10-7
1 ST'D. DI-3A DROP INLET REQ'D
H=4.18ft, INV. =105.50

UNDERDRAIN CONNECTION TO BE PROVIDED
IS-1 INLET SHAPING REQ'D

D10-7 TO D10-4
142ft - 15 inch CONC. PIPE REQ'D

(914 ft RADIUS WITH OPEN JOINT - USING 8 ft
PIPE JOINT LENGTHS WITH RUBBER GASKETS)
JOINTS ARE TO BE OPENED A MAXIMUM OF 25%
OF THE SPIGOT OR
TONGUE LENGTH
INV. (IN) 105.50 INV. (OUT) 95.00

PLAN SHEET D11

D11-1
1 ST'D. DI-3B DROP INLET REQ'D
H=6.38ft, L = 14.0ft INV. =72.55
IS-1 INLET SHAPING REQ'D

D11-1 TO D11-4
293ft - 30 inch CONC. PIPE REQ'D
INV. (IN) 72.55 INV. (OUT) 66.99

D11-2
1 ST'D. DI-3B DROP INLET REQ'D
H=5.17ft, L = 8.0ft INV. =72.89

UNDERDRAIN CONNECTION TO BE PROVIDED
IS-1 INLET SHAPING REQ'D

D11-2 TO D11-1
40ft - 30 inch CONC. PIPE REQ'D
INV. (IN) 72.89 INV. (OUT) 72.65

D11-3
1 ST'D. DI-3BB DROP INLET REQ'D
H=11.71ft, L = 4.0ft INV. =59.32

UNDERDRAIN CONNECTION TO BE PROVIDED
IS-1 INLET SHAPING REQ'D

D11-3 TO D11-7
53ft - 30 inch CONC. PIPE REQ'D
INV. (IN) 59.32 INV. (OUT) 59.00
1 ST'D EW-1, END WALL REQ'D

D11-4
1 ST'D. DI-3B DROP INLET REQ'D
H=5.81ft, L = 4.0ft INV. =66.95
IS-1 INLET SHAPING REQ'D

D11-4 TO D11-3
40ft - 30 inch CONC. PIPE REQ'D
INV. (IN) 66.95 INV. (OUT) 66.38

D11-5
1 ST'D. DI-3C DROP INLET REQ'D
H=3.92ft, L = 6.0ft INV. =68.58

D11-5 TO D11-6
42ft - 15 inch CONC. PIPE REQ'D
INV. (IN) 68.58 INV. (OUT) 66.10

D11-6
1 ST'D. DI-3C DROP INLET REQ'D
H=4.64ft, L = 6.0ft INV. =66.10

2 UNDERDRAIN CONNECTIONS TO BE PROVIDED
IS-1 INLET SHAPING REQ'D

D11-6 TO D11-3
67ft - 18 inch CONC. PIPE REQ'D
INV. (IN) 66.10 INV. (OUT) 65.70

D11-8
1 ST'D. DI-3B DROP INLET REQ'D
H=3.92ft, L = 6.0ft INV. =68.72

D11-8 TO D11-9
42ft - 15 inch CONC. PIPE REQ'D
INV. (IN) 68.72 INV. (OUT) 66.50

D11-9
1 ST'D. DI-3B DROP INLET REQ'D
H=4.48ft, L = 6.0ft INV. =66.40

UNDERDRAIN CONNECTION TO BE PROVIDED
IS-1 INLET SHAPING REQ'D

D11-9 TO D11-6
51ft - 18 inch CONC. PIPE REQ'D
INV. (IN) 66.40 INV. (OUT) 66.20

D11-11
1 ST'D. DI-SWM-1 STRUCTURE REQ'D
H = 5.55ft, TOP = 61.80

INV. 2.5-INCH WATER QUALITY ORIFICE = 59.25

D11-11 TO D11-12
80ft - 18 inch CONC. PIPE REQ'D
INV. (IN) 58.50 INV. (OUT) 57.00
1 ST'D EW-1, END WALL REQ'D

NOTE: ALL CONCRETE PIPES WILL CONFORM TO AASHTO M170
ALL RUBBER GASKETS WILL CONFORM TO ASTM C-443

U.S. DEPARTMENT OF TRANSPORTATION
FEDERAL HIGHWAY ADMINISTRATION
EASTERN FEDERAL LANDS HIGHWAY DIVISION
STERLING, VIRGINIA

FORT BELVOIR - MULLIGAN ROAD

DRAINAGE DESCRIPTION

6/18/2008 3:11:45 PM C:\PWworking\PITT\dms6056\H16.dgn

REG	STATE	PROJECT	SHEET NO.
-	VA	VA-A-AD-48(1)	H18

PLAN SHEET D12

D12-3 1 ST'D. DI-3B DROP INLET REQ'D
H=3.92ft, L = 8.0ft INV. =71.06

D12-3 TO D12-2 41ft - 15 inch CONC. PIPE REQ'D
INV. (IN) 71.06 INV. (OUT) 69.20

D12-2 1 ST'D. DI-3B DROP INLET REQ'D
H=4.42ft, L = 6.0ft INV. =68.80

UNDERDRAIN CONNECTION TO BE PROVIDED
IS-1 INLET SHAPING REQ'D

D12-2 TO D12-1 212ft - 15 inch CONC. PIPE REQ'D

(914 ft RADIUS WITH OPEN JOINT - USING 8 ft
PIPE JOINT LENGTHS WITH RUBBER GASKETS)
JOINTS ARE TO BE OPENED A MAXIMUM OF 25%
OF THE SPIGOT OR
TONGUE LENGTH
INV. (IN) 68.80 INV. (OUT) 67.75

D12-1 1 ST'D. DI-3BB DROP INLET REQ'D
H=14.10ft, L = 4.0ft INV. =61.00
SL-1 SAFETY SLAB REQD.

UNDERDRAIN CONNECTION TO BE PROVIDED
IS-1 INLET SHAPING REQ'D

D12-1 TO D12-6 40ft - 15 inch CONC. PIPE REQ'D
INV. (IN) 61.00 INV. (OUT) 60.00
1 ST'D EW-1, END WALL REQ'D

D12-4 1 ST'D. DI-3B DROP INLET REQ'D
H=4.65ft, L = 4.0ft INV. =71.40

UNDERDRAIN CONNECTION TO BE PROVIDED
IS-1 INLET SHAPING REQ'D

D12-4 TO D12-1 120ft - 15 inch CONC. PIPE REQ'D
INV. (IN) 71.40 INV. (OUT) 70.50

D12-5 1 ST'D. DI-3A DROP INLET REQ'D
H=4.38ft, INV. =72.00

UNDERDRAIN CONNECTION TO BE PROVIDED
IS-1 INLET SHAPING REQ'D

D12-5 TO D12-4 73ft - 15 inch CONC. PIPE REQ'D
INV. (IN) 72.00 INV. (OUT) 71.50

D12-10 1 ST'D. DI-3C DROP INLET REQ'D
H=3.92ft, L = 6.0ft INV. =72.41

2 UNDERDRAIN CONNECTIONS TO BE PROVIDED

D12-10 TO D12-5 33ft - 15 inch CONC. PIPE REQ'D
INV. (IN) 72.41 INV. (OUT) 72.10

D12-8 TO D12-9 112ft - 53 x 34 inch HORIZ. ELLIP CONC. PIPE REQ'D
INV. (IN) 72.50 INV. (OUT) 69.50
2 ST'D EW-1A, END WALL REQ'D

D12-13 1 ST'D. DI-3B DROP INLET REQ'D
H=3.92ft, L = 8.0ft INV. =74.00

UNDERDRAIN CONNECTION TO BE PROVIDED

D12-13 TO D13-3 88ft - 15 inch CONC. PIPE REQ'D
INV. (IN) 74.00 INV. (OUT) 73.56

PLAN SHEET D13

D13-3 1 ST'D. DI-3BB DROP INLET REQ'D
H=8.95ft, L = 6.0ft INV. =69.70

UNDERDRAIN CONNECTION TO BE PROVIDED
IS-1 INLET SHAPING REQ'D

D13-3 TO D13-4 61ft - 15 inch CONC. PIPE REQ'D
INV. (IN) 69.70 INV. (OUT) 69.00
1 ST'D EW-1, END WALL REQ'D

D13-1 TO D13-2 139ft - 54 inch CONC. PIPE REQ'D
INV. (IN) 73.00 INV. (OUT) 67.00
2 ST'D EW-2, ENDWALL REQ'D

D13-5 1 ST'D. DI-3BB DROP INLET REQ'D
H=10.23ft, L = 4.0ft INV. =75.50

UNDERDRAIN CONNECTION TO BE PROVIDED

D13-5 TO D13-6 18ft - 15 inch CONC. PIPE REQ'D
INV. (IN) 75.50 INV. (OUT) 75.00
1 ST'D EW-1, END WALL REQ'D

PLAN SHEET D14

D14-1 1 ST'D. DI-3BB DROP INLET REQ'D
H=14.43ft, L = 8.0ft INV. =68.72
SL-1 SAFETY SLAB REQD.
UNDERDRAIN CONNECTION TO BE PROVIDED

D14-1 TO D14-2 41ft - 15 inch CONC. PIPE REQ'D
INV. (IN) 68.72 INV. (OUT) 68.00
1 ST'D EW-1, END WALL REQ'D

NOTE: ALL CONCRETE PIPES WILL CONFORM TO AASHTO M170
ALL RUBBER GASKETS WILL CONFORM TO ASTM C-443

U.S. DEPARTMENT OF TRANSPORTATION
FEDERAL HIGHWAY ADMINISTRATION
EASTERN FEDERAL LANDS HIGHWAY DIVISION
STERLING, VIRGINIA

FORT BELVOIR - MULLIGAN ROAD

DRAINAGE DESCRIPTION

6/18/2008 3:12:02 PM C:\PWworking\PITT\dms60566\H16.dgn

FOR INFORMATION ONLY

REG	STATE	PROJECT	SHEET NO.
-	VA	VA-A-AD-48(1)	HS01

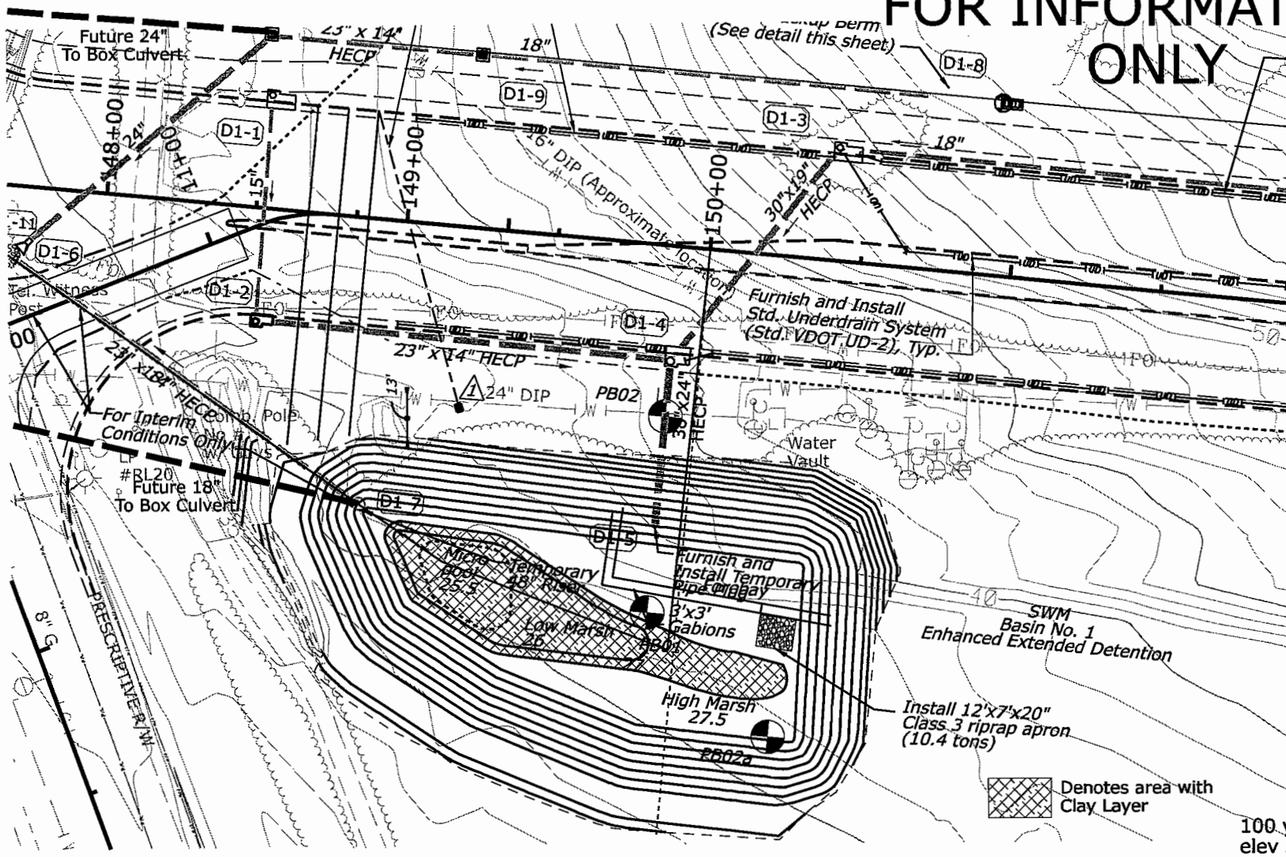

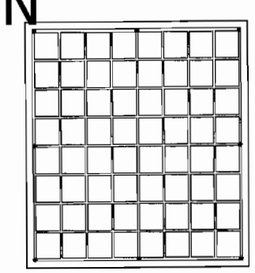

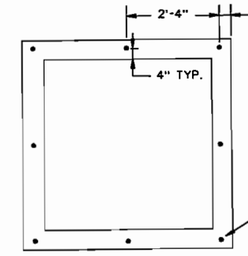

(TRASH RACK NOT SHOWN)

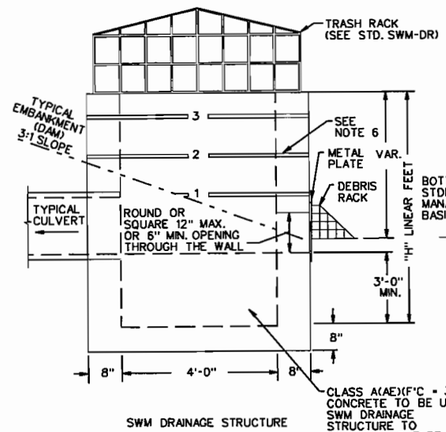

SWM DRAINAGE STRUCTURE

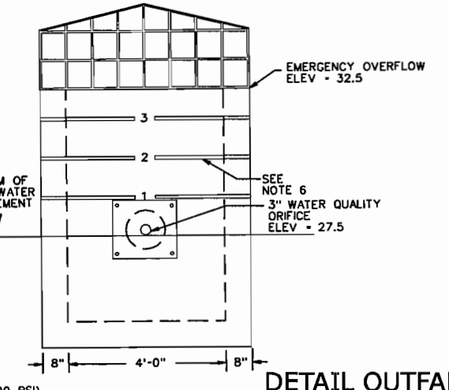

(DEBRIS RACK NOT SHOWN)

DETAIL OUTFALL N.T.S.

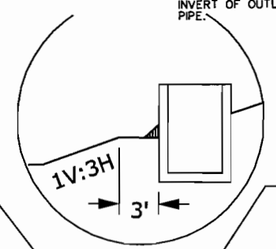

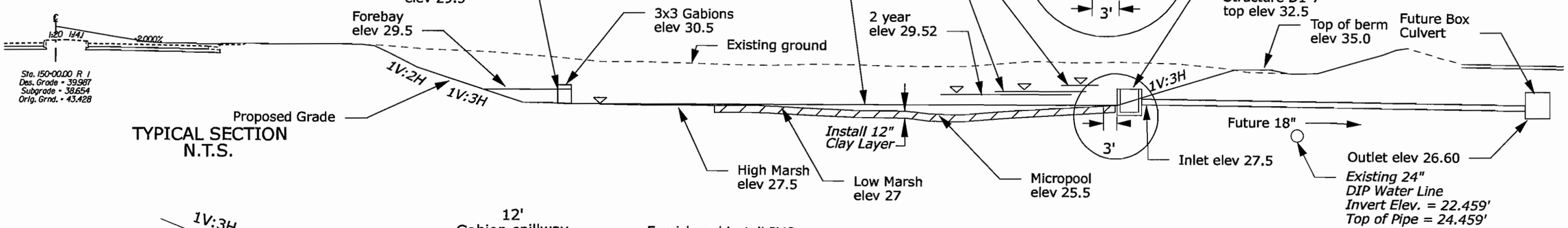

TYPICAL SECTION N.T.S.

Note: See Detail E603-C for detail of SWM embankment and installation of outfall pipe with concrete cradle.

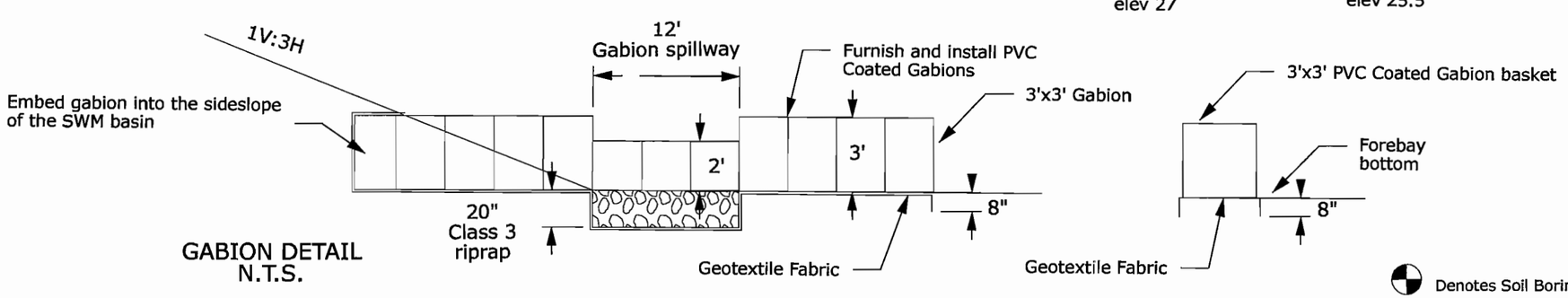

GABION DETAIL N.T.S.

Denotes Soil Boring Location

U.S. DEPARTMENT OF TRANSPORTATION
FEDERAL HIGHWAY ADMINISTRATION
EASTERN FEDERAL LANDS HIGHWAY DIVISION
STERLING, VIRGINIA

FORT BELVOIR - MULLIGAN ROAD

FUTURE STORM WATER MANAGEMENT PLAN - SWM1 (BY OTHERS)

6/19/2008 11:25:44 AM C:\PWworking\PITT\dms60567\HS01.dgn

REG	STATE	PROJECT	SHEET NO.
-	VA	VA-A-AD-48(1)	HS02

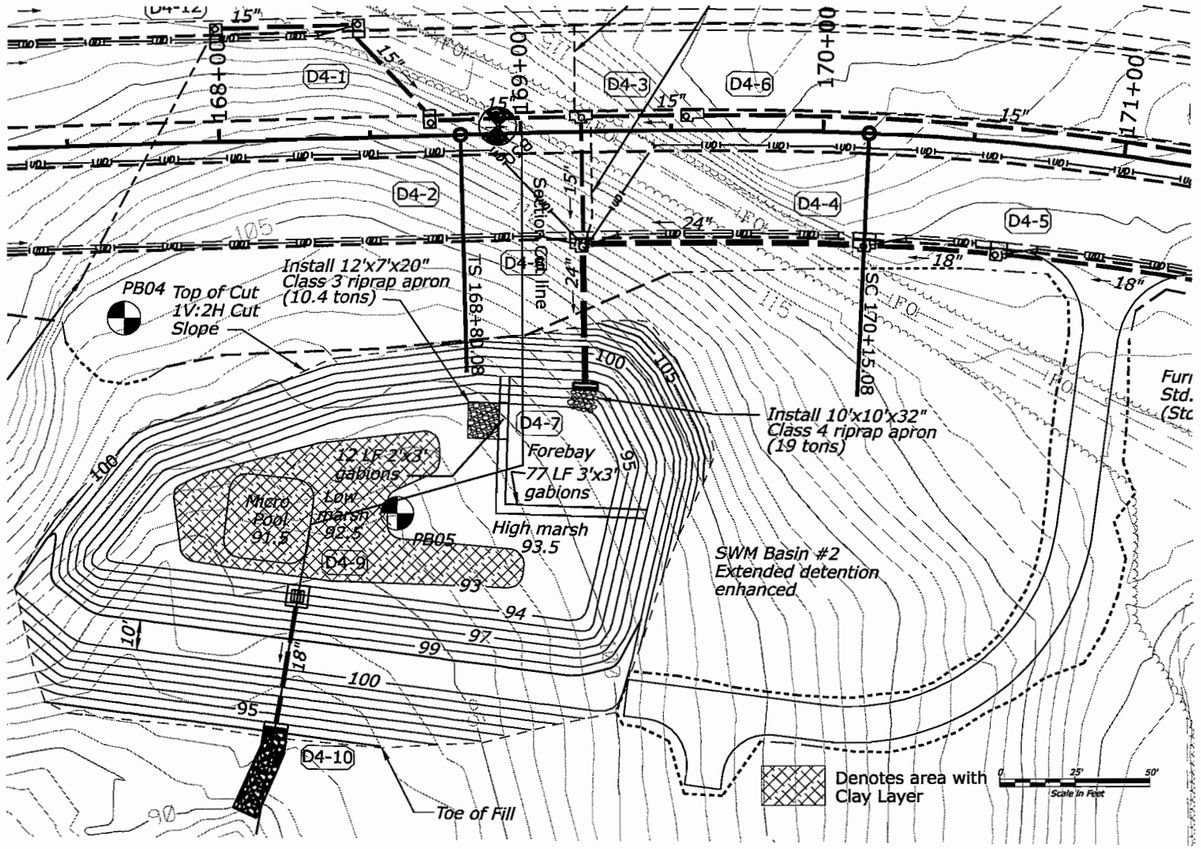

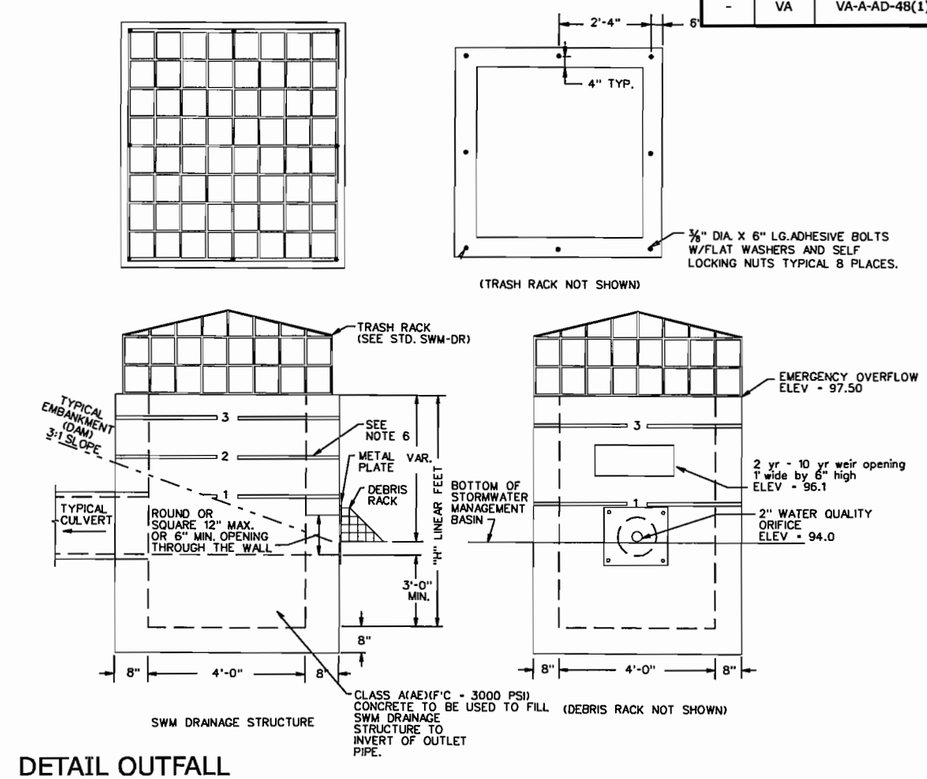

DETAIL OUTFALL
N.T.S

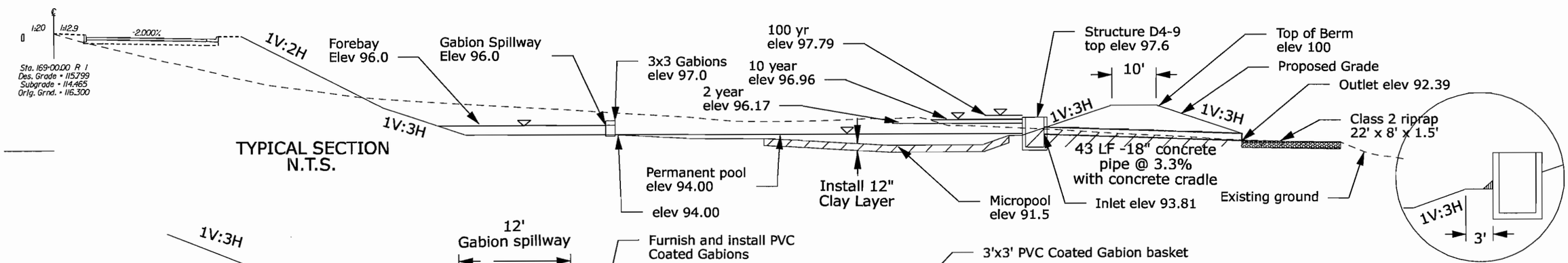

TYPICAL SECTION
N.T.S.

Note: See Detail E603-C for detail of SWM embankment and installation of outfall pipe with concrete cradle.

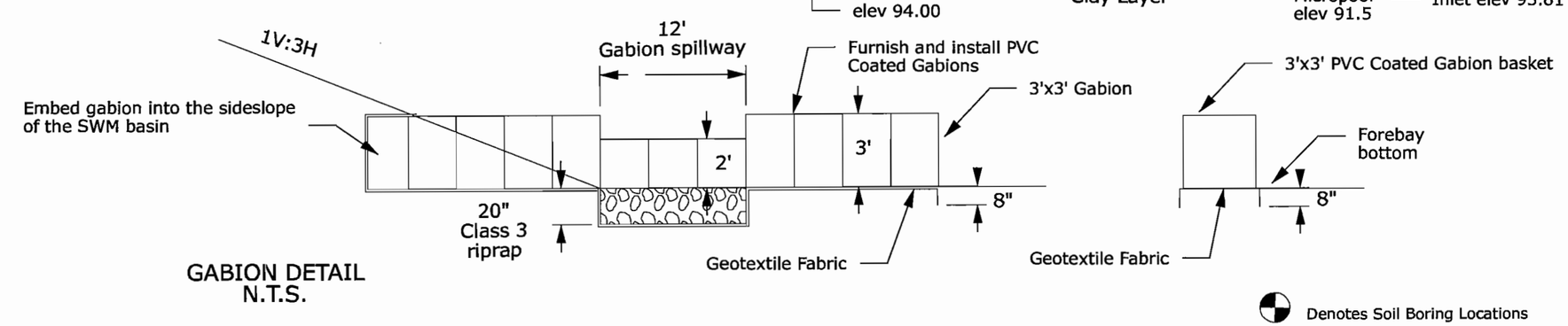

GABION DETAIL
N.T.S.

U.S. DEPARTMENT OF TRANSPORTATION
FEDERAL HIGHWAY ADMINISTRATION
EASTERN FEDERAL LANDS HIGHWAY DIVISION
STERLING, VIRGINIA

FORT BELVOIR - MULLIGAN ROAD

STORM WATER MANAGEMENT PLAN - SWM2

6/19/2008 8:55:05 AM C:\PWworking\PITT\dms60567\HS02.dgn

REG	STATE	PROJECT	SHEET NO.
-	VA	VA-A-AD-48(1)	HS03

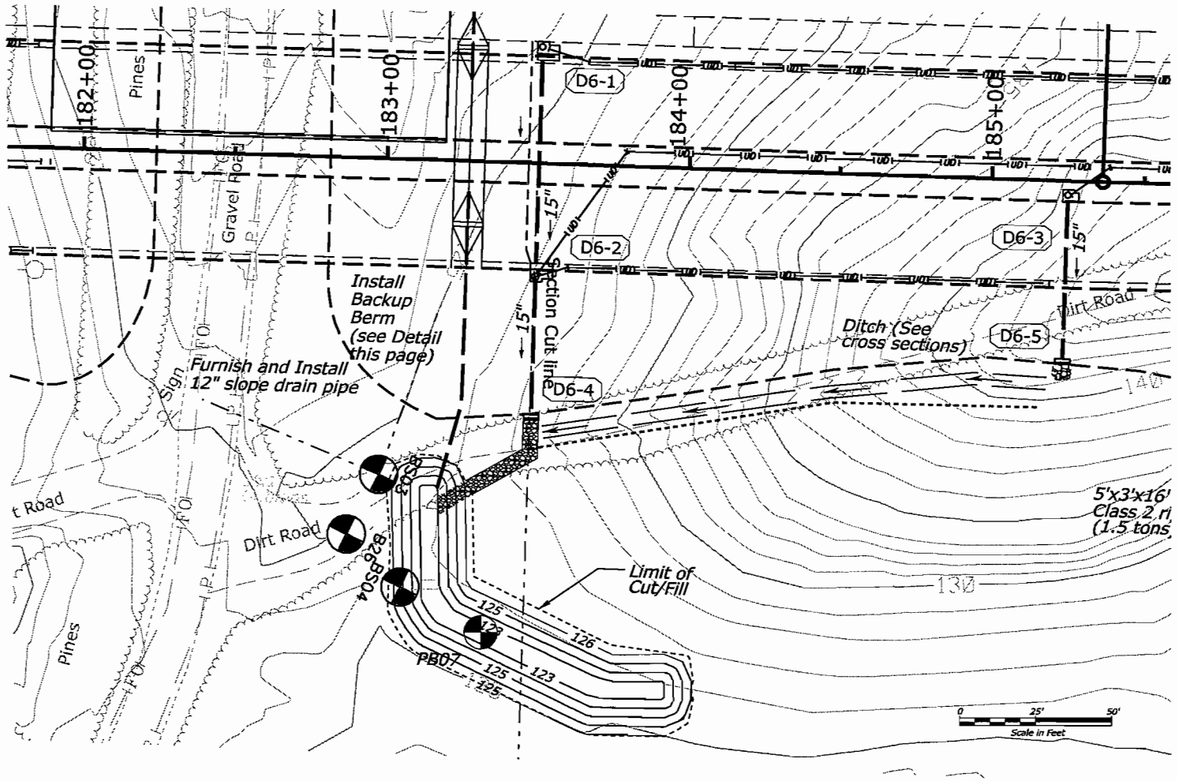

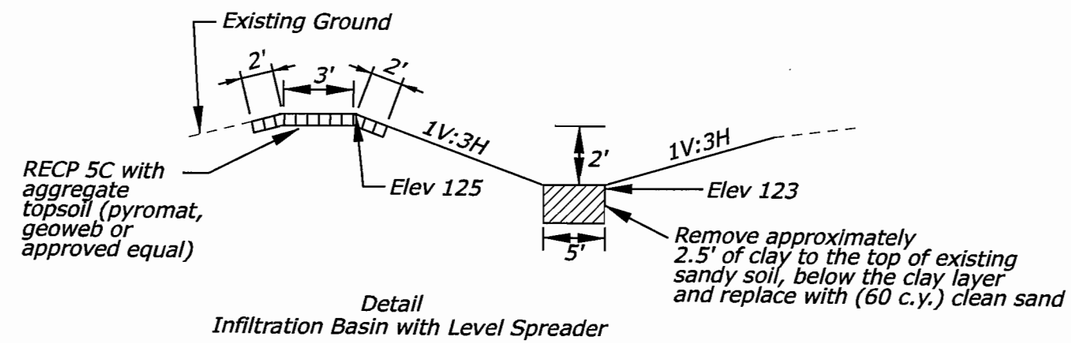

Detail
Infiltration Basin with Level Spreader

DETAIL OUTFALL
N.T.S

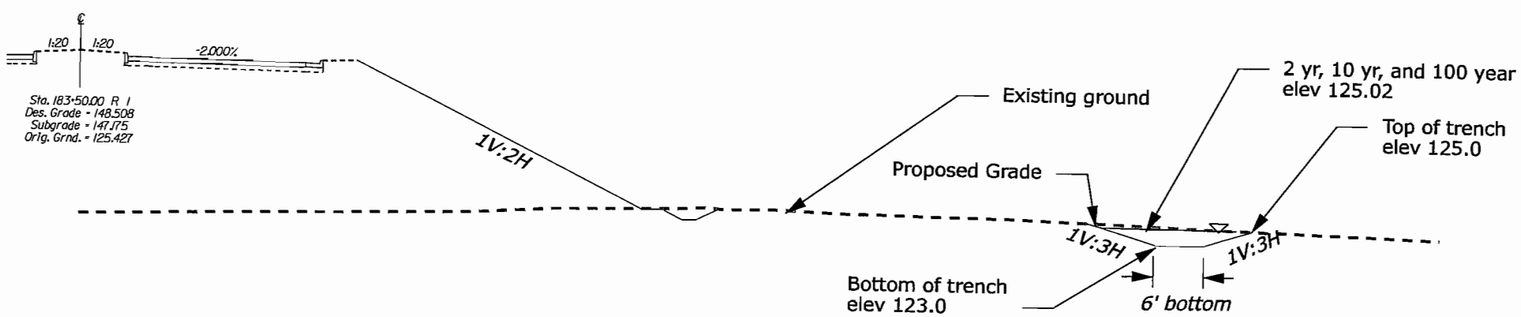

TYPICAL SECTION
N.T.S.

Denotes Soil Boring Location

U.S. DEPARTMENT OF TRANSPORTATION
FEDERAL HIGHWAY ADMINISTRATION
EASTERN FEDERAL LANDS HIGHWAY DIVISION
STERLING, VIRGINIA

FORT BELVOIR - MULLIGAN ROAD

STORM WATER MANAGEMENT PLAN - SWM4

6/18/2008 2:00:07 PM C:\PWworking\PITT\dms60567\HS05.dgn

REG	STATE	PROJECT	SHEET NO.
-	VA	VA-A-AD-48(1)	HS04

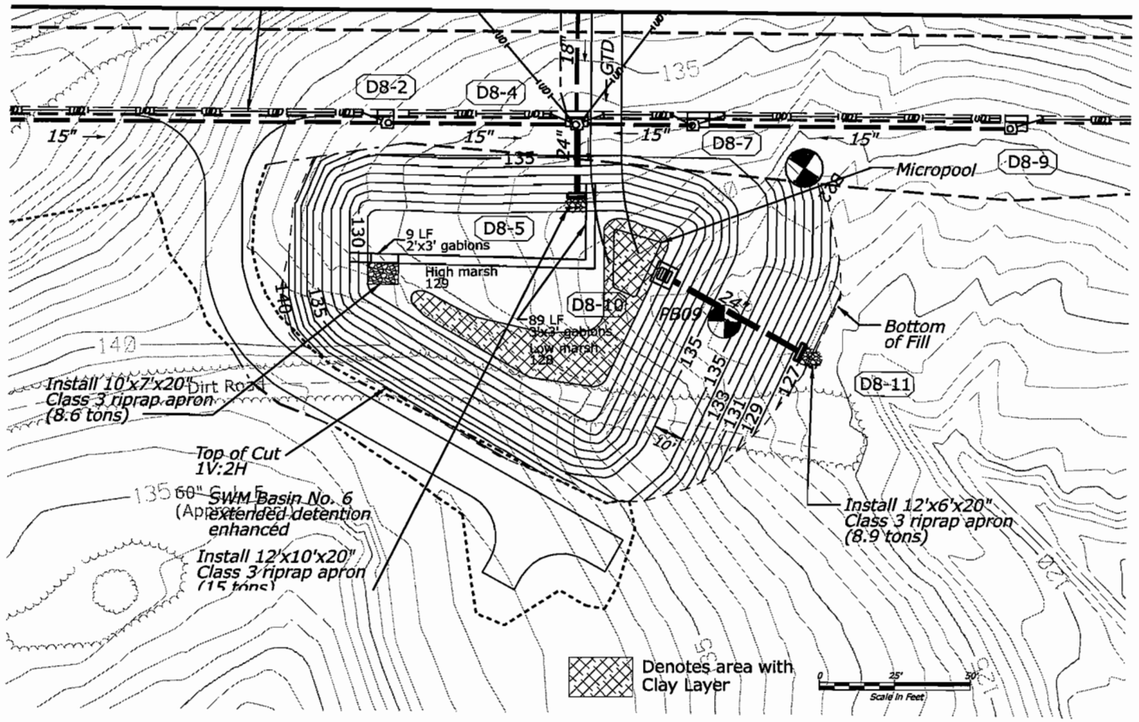

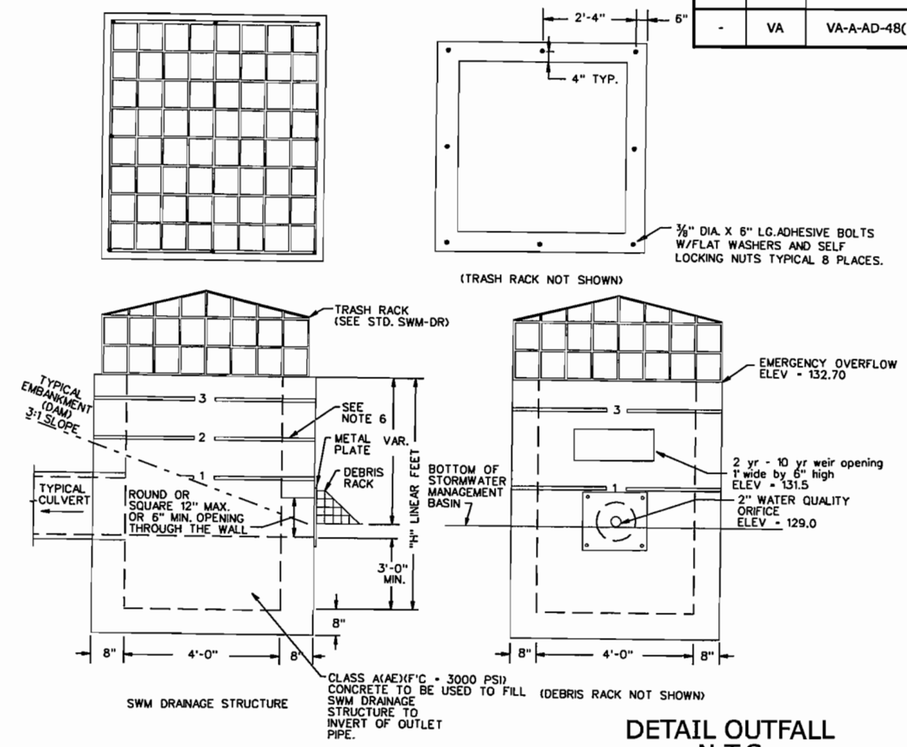

DETAIL OUTFALL
N.T.S

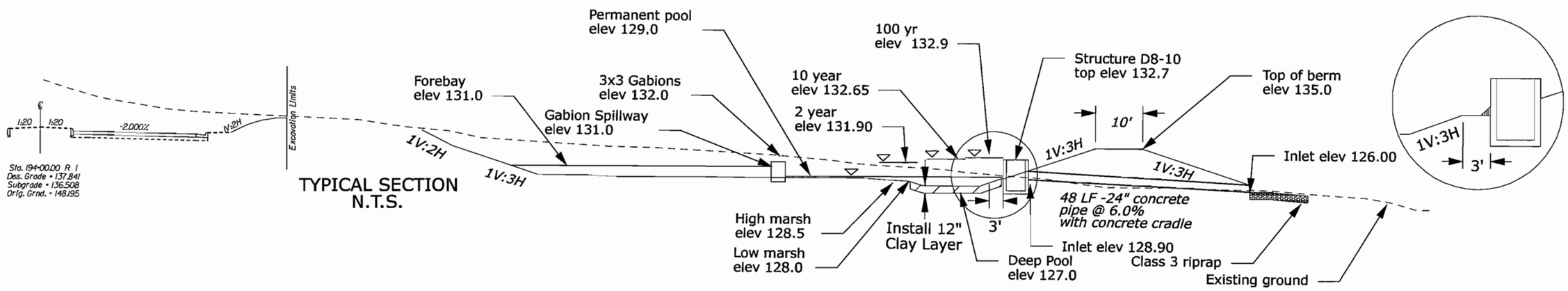

TYPICAL SECTION
N.T.S.

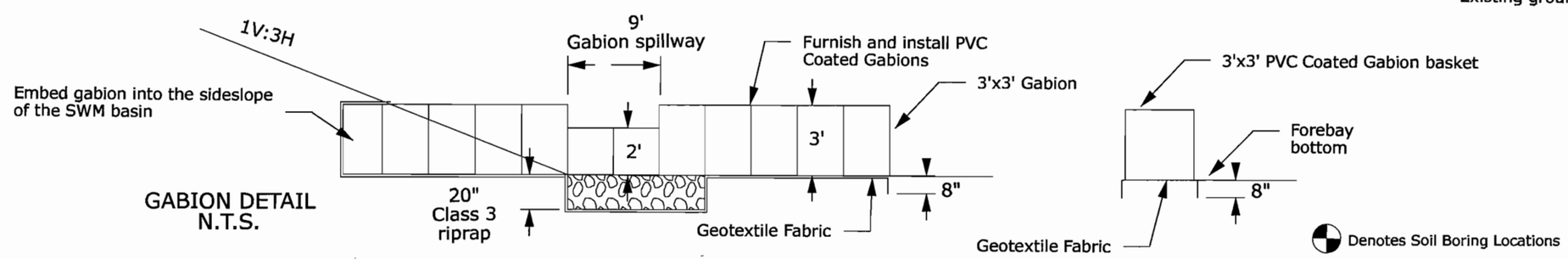

GABION DETAIL
N.T.S.

Note: See Detail E603-C for detail of SWM embankment and installation of outfall pipe with concrete cradle.

U.S. DEPARTMENT OF TRANSPORTATION
FEDERAL HIGHWAY ADMINISTRATION
EASTERN FEDERAL LANDS HIGHWAY DIVISION
STERLING, VIRGINIA

FORT BELVOIR - MULLIGAN ROAD

STORM WATER MANAGEMENT PLAN - SWM6

6/19/2008 8:57:17 AM C:\PWworking\PITT\dms60567\HS03.dgn

REG	STATE	PROJECT	SHEET NO.
-	VA	VA-A-AD-48(1)	HS05

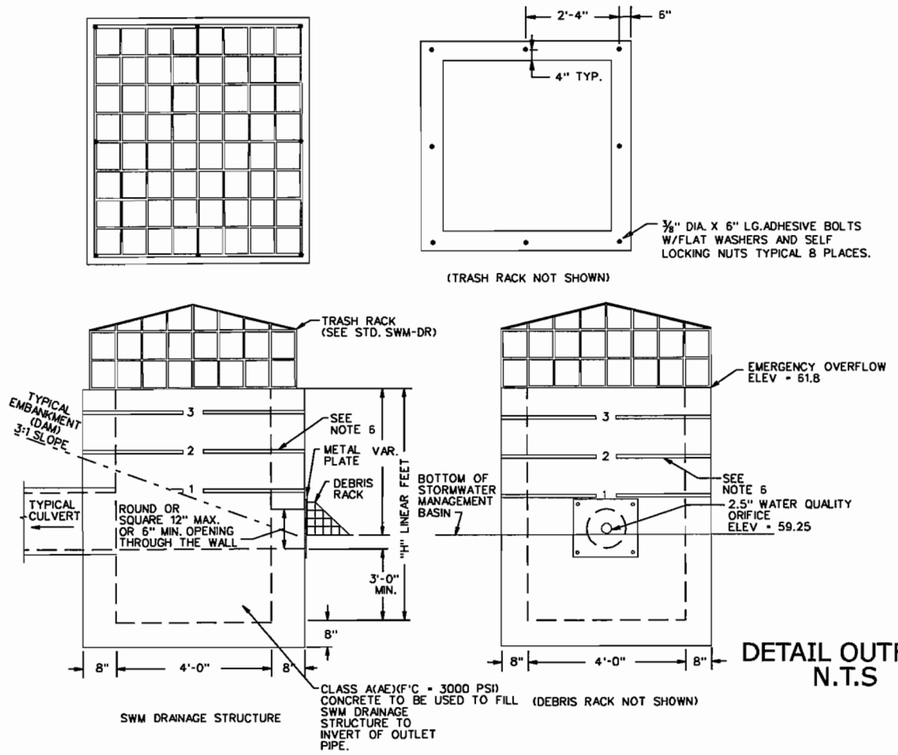

DETAIL OUTFALL
N.T.S

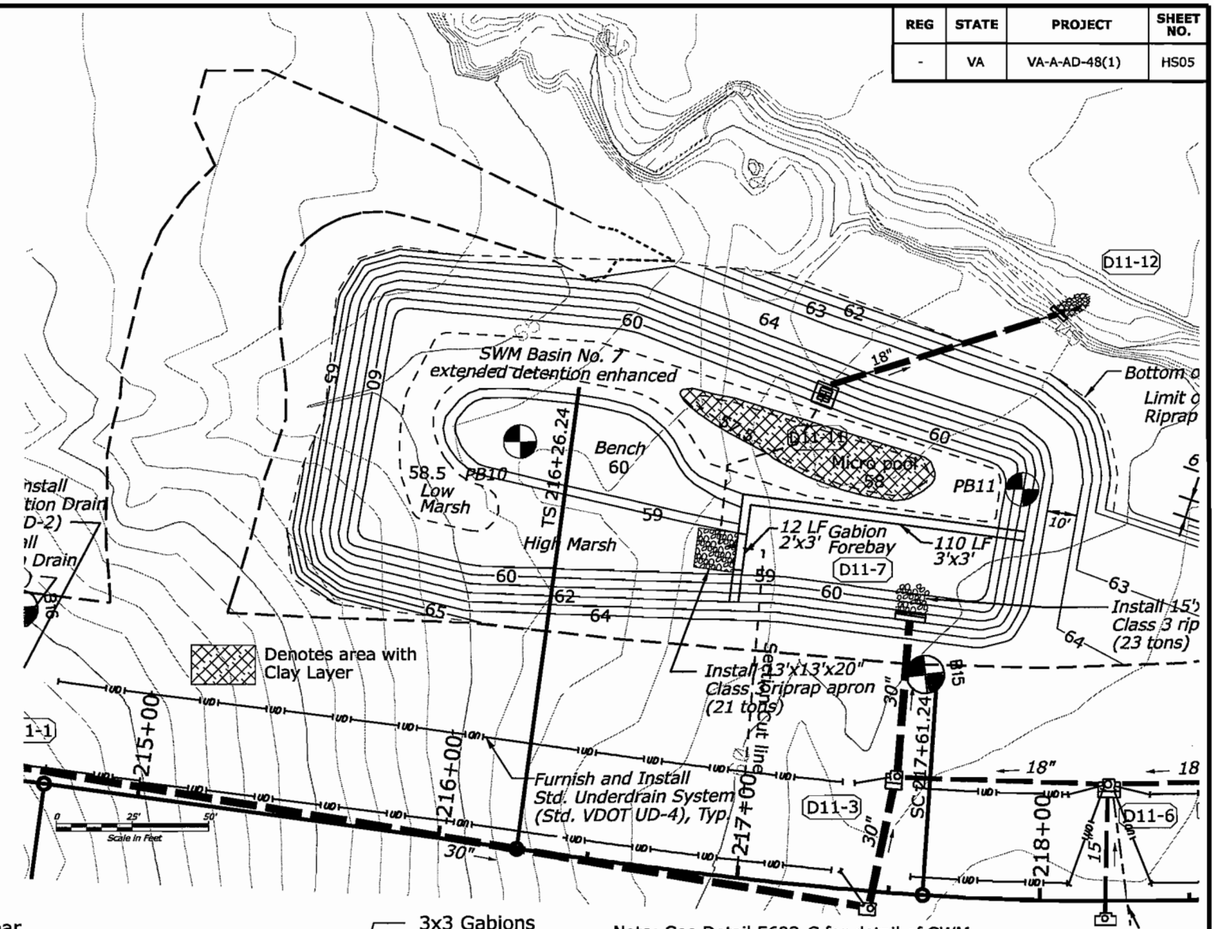

Note: See Detail E603-C for detail of SWM embankment and installation of outfall pipe with concrete cradle.

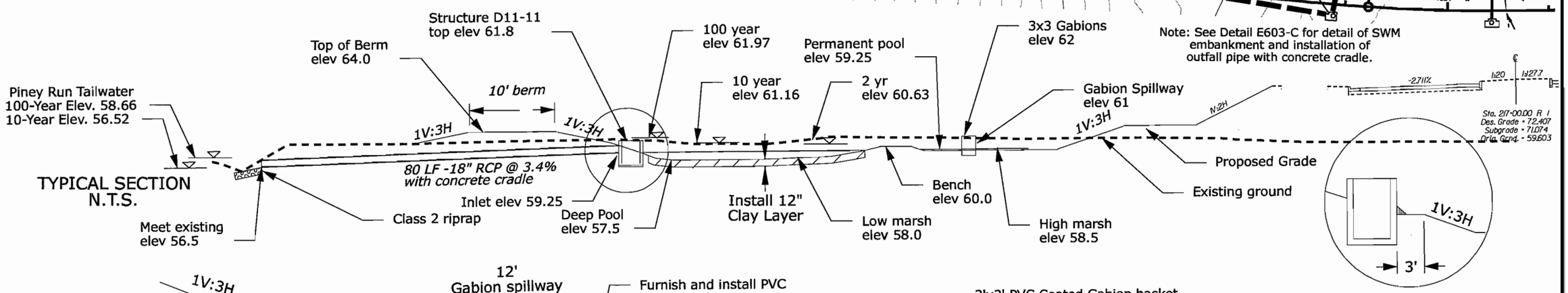

TYPICAL SECTION
N.T.S.

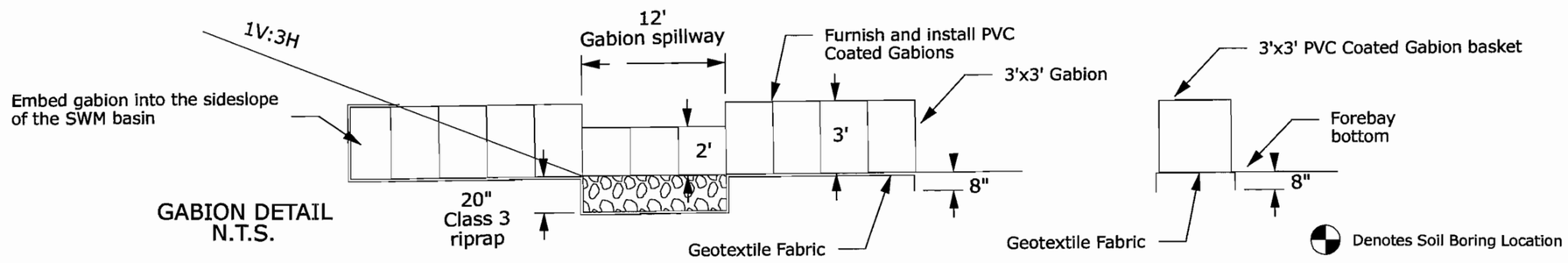

GABION DETAIL
N.T.S.

U.S. DEPARTMENT OF TRANSPORTATION
FEDERAL HIGHWAY ADMINISTRATION
EASTERN FEDERAL LANDS HIGHWAY DIVISION
STERLING, VIRGINIA

FORT BELVOIR - MULLIGAN ROAD

STORM WATER MANAGEMENT PLAN - SWM7

6/19/2008 9:11:43 AM C:\PWworking\PITT\dms60567\HS04.dgn

REG	STATE	PROJECT	SHEET NO.
-	VA	VA-A-AD-48(1)	HS06

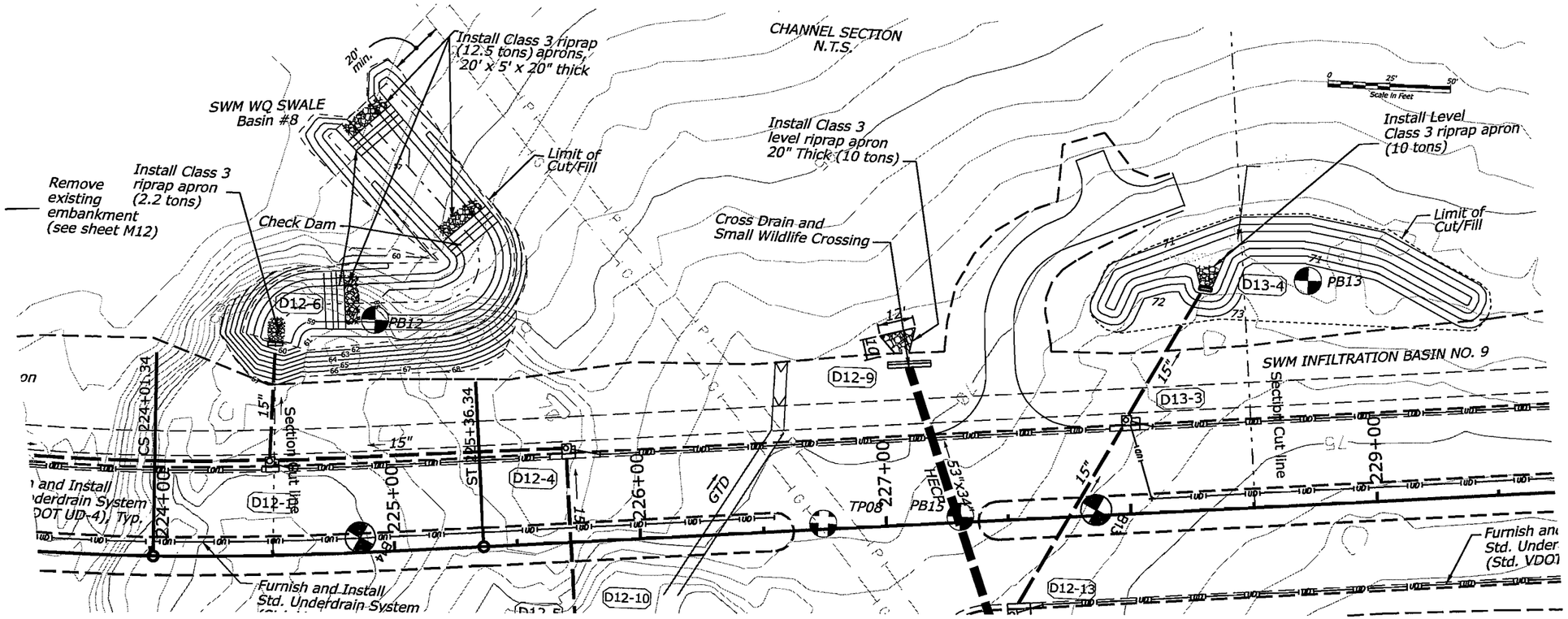

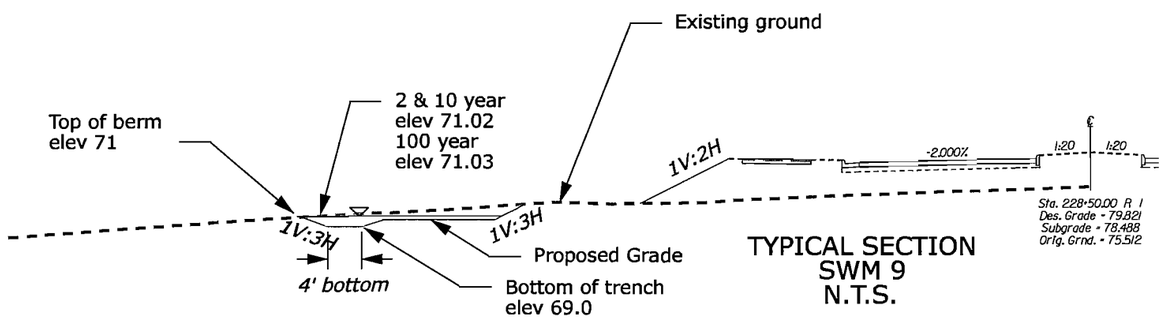

TYPICAL SECTION
SWM 9
N.T.S.

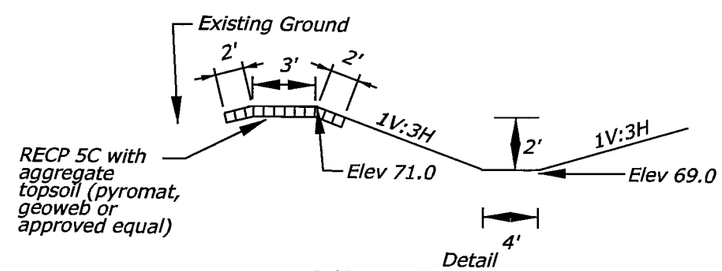

Detail
Infiltration Basin with Level Spreader

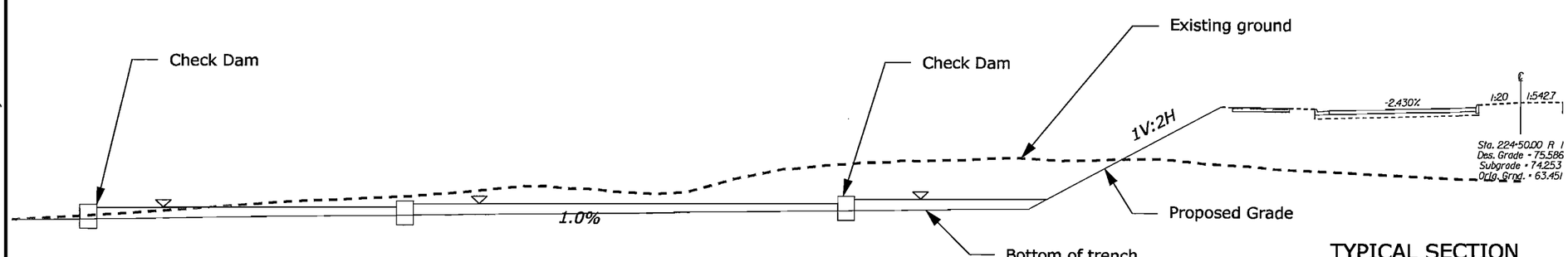

TYPICAL SECTION
WATER QUALITY SWALE
SWM 8
N.T.S.

Denotes Soil Boring Locations

U.S. DEPARTMENT OF TRANSPORTATION
FEDERAL HIGHWAY ADMINISTRATION
EASTERN FEDERAL LANDS HIGHWAY DIVISION
STERLING, VIRGINIA

FORT BELVOIR - MULLIGAN ROAD

STORM WATER MANAGEMENT PLAN - SWM8 and 9

6/18/2008 2:01:58 PM C:\PWworking\PITT\dms60567\HS06.dgn

REG	STATE	PROJECT	SHEET NO.
-	VA	VA-A-AD-48(1)	MA

EROSION & SEDIMENT CONTROL NARRATIVE AND SEQUENCE OF CONSTRUCTION

1.0 GENERAL GUIDELINES

The Erosion Control Plans (ECP) are meant as guidelines to prevent erosion and control sediment.
The work outlined in this narrative consists of applying measures throughout the life of the project to control erosion and minimize the sedimentation of streams, and impoundments such as lakes, reservoirs, bays, and coastal waters. These measures consist of stabilization and structural practices.

Coordinate the installation, use and removal of erosion and sediment control measures with bridge and roadway construction activities to assure economical, effective and continuous erosion and sediment control. Employ temporary stabilization practices in incremental stages as construction proceeds.

Install all erosion and sediment control measures as shown in the ECP or as directed by the Contracting Officer (CO). Do not modify the type, size or location of any control or practice without approval from the CO, preventing initial soil erosion is much more effective than trying to control eroded sediment. Therefore, stabilize all disturbed areas as soon as is practical, but no more than 14 days after construction activity has temporarily or permanently eased.

Prior to any clearing, grubbing, and excavation, construct perimeter controls, sediment basins and traps to ensure that disturbed sediment does not leave the project site. Perimeter controls include silt fence, super silt fence, temporary diversion channel and temporary diversion berms. Where possible, install permanent culverts and channels before beginning rough grading and divert offsite drainage through the completed culverts as soon as practicable. Silt and super silt fence shall be placed as level as possible by following topographic contours.

Control only sediment-laden runoff generated by the project site. Separate and quickly divert clear, offsite runoff away from disturbed areas within the project by using earth diversion berms, stabilized ditches and culverts.

Do not drive construction equipment across flowing waterways. Do not allow construction vehicles to track sediment offsite of the project limits.

In general, preserve existing vegetation, trees, and shrubs when possible, where specifically shown in the plans or as directed by the CO.

2.0 INSPECTION AND MAINTENANCE PROCEDURES FOR CONTROLS

Inspect, maintain, and clean all erosion and sediment control measures according to Section 157.12. Check erosion and sediment control measures at least weekly, but also within 24 hours after a rain of 3/8th of an inch or more, and daily during wet weather. Clean erosion and sediment control measures when half full of sediment. Repair measures as necessary. Replace erosion and sediment control measures that cannot be maintained and those that are damaged by construction operations. If visible sedimentation is found off-site, take immediate measures to clean up the site. Maintain written records of inspection and repairs. Provide the CO with copies every month and the entire record at the completion of the project.

The following is a description of anticipated steps for the sequence of construction within different sections of the project. The sections described are generally bounded by project features such as existing roadways, profile high points and streams.

3.0 SEQUENCE OF CONSTRUCTION

PHASE I (INITIAL CONSTRUCTION):

Phase I E&S Control from Station 149+00 to 167+03.

1. Prior to any construction or staging, construct stabilized construction entrance as shown in the ECP from access at Pole Road or as directed by the CO.
2. Install perimeter controls and clear and grub only as necessary for the construction of Sediment Basin 1.
3. Construct Sediment Basin 1 and the outflow pipe to the inlet of the existing double 24-inch pipes at Pole Road.
4. Construct diversion berm from Sediment Basin 1 to Station 167+03 as shown on the ECP.
5. Begin clearing and grubbing for general roadway construction.

Phase I E&S Control from Station 167+03 to 182+50.

1. Install perimeter controls and clear and grub only as necessary for the construction of Sediment Basin 2 and Sediment Basin M4-1.
2. Construct Sediment Basin 2 and Sediment Basin M4-1. For the permanent outfall structure of Sediment Basin 2, place a temporary cover over the 2-year and 10-year weir opening and the Water Quality Orifice. Attach temporary dewatering system to permanent outfall structure.
3. Construct diversion berm as shown on the ECP and the super silt fence.
4. Begin clearing and grubbing for general roadway construction.

Phase I E&S Control from Station 182+50 to 186+29.

1. Install perimeter controls and clear and grub only as necessary within a forecasted 2-day dry period for the construction of Sediment Trap M6-1.
2. Install diversion berm and silt fence.
3. Begin clearing and grubbing for general roadway and bridge construction.

Phase I E&S Control from Station 186+29 to 200+84.

1. Install perimeter controls and clear and grub only as necessary for the construction of Sediment Trap M7-1 and Sediment Basin 6.
2. Construct Sediment Trap M7-1 and Sediment Basin 6. For the permanent outfall structure of Sediment Basin 6, place a temporary cover over the 2-year and 10-year weir opening and the Water Quality Orifice. Attach temporary dewatering system to permanent outfall structure.
3. Install diversion berms to Sediment Trap M7-1 and Sediment Basin 6.
4. Install super silt fence and the sediment trap at Station 197+50 on the right side.
5. Clear and grub areas for general roadway construction.

Phase I E&S Control from Station 200+84 to 220+50.

1. Install perimeter controls including silt fence then clear water diversion berms and clear and grub only as necessary for the construction of Sediment Basin 7.
2. Construct Sediment Basin 7 and attach temporary dewatering device and place temporary cover over the water quality opening.
3. Construct diversion berm on left side of the road from Station 203+50 to Sediment Basin 7.
4. Construct permanent clear water diversion channel on the right side from Station 213+00 to 214+00 which connects to an existing natural channel.
5. Construct clear water diversion berm on the right side from station 209+00 to 213+00 and the remainder of the permanent channel, used for clear water diversion, on the right side from station 215+00 to 217+00. Extend the diversion berm from Station 213+00 to 213+50 to prevent sediment laden water from the cleared cut slope area to enter the clear water diversion ditch.
6. Construct the spring drain and the class 3 riprap level apron at Station 217+50.
7. Install temporary 18"x 215 flexible HECP pipe for clear water diversion at Station 209+05.
8. Construct clear water diversion berm on the right side from the inlet of the clear water diversion pipe at Station 209+05 to Station 205+00.
9. Place super silt fence along top of the bank at Piney Run, the tributary of Piney Run and Station 217+00 to 219+00 on the right side.
10. Begin clearing and grubbing for general roadway and bridge construction.

Phase I E&S Control from Station 220+50 to 236+00.

1. Prior to any construction or staging, construct stabilized construction entrance from access of Telegraph Road as shown in the ECP or as directed by the CO.
2. Install cross drain pipe at Station 234+05 with the clear water diversion on the right side and super silt fence on the left side from Station 235+00 to 228+00.
3. Install cross drain pipe at Station 227+30 with the clear water diversion on the right side from Station 229+50 to 227+00.
4. Construct Sediment Trap M12-1 with the diversion ditch and berm on the left side from Station 226+50 and 228+50.
5. Construct the permanent clear water diversion ditch with RECP on the right side from Station 227+00 to Piney Run including a riprap outfall channel.
6. Install silt fence along top of the bank of Piney Run and from Station 220+00 to Station 225+75 on the left side. Also, install silt fence and temporary plastic fence along limits of excavation of the existing abandoned roadway embankment at Station 223+00, left side.
7. Construct access road and install temporary causeway across Piney Run as necessary for the construction of the Mulligan Road Bridge across Piney Run.
8. Clear and grub areas for general roadway construction.

U.S. DEPARTMENT OF TRANSPORTATION
FEDERAL HIGHWAY ADMINISTRATION
EASTERN FEDERAL LANDS HIGHWAY DIVISION
STERLING, VIRGINIA

FORT BELVOIR - MULLIGAN ROAD

E&S Control Narrative and Sequence of Construction

6/18/2008 1:09:09 PM c:\pwworking\pth\dms60567\M.dgn

PHASE II (INTERMEDIATE CONTROLS / STABILIZATION):

General:

On slopes over 20 ft high, apply permanent turf establishment according to Section 625 in 20 ft vertical increments as the work progresses.

Apply temporary turf establishment on uncompleted disturbed areas that will remain exposed for over 14 calendar days or as directed by the CO. As soon as practical, but not to exceed 14 calendar days, apply permanent turf establishment to the finished slopes and ditches according to Sections 624 and 625. To control erosion during the time periods between seeding seasons, as shown in Section 625, apply temporary mulch in lieu of temporary turf establishment.

At the end of each day's grading operations, shape earthwork to minimize and control erosion from storm runoff. When directed by the CO, apply temporary mulch to all disturbed slopes at the end of each day's grading operations.

Install check dams (filter berms) along rough graded ditches at spacing shown. Remove check dams immediately prior to final channel grading and stabilization where shown in the ECP or when directed by the CO. Line steep, rough graded channels with plastic lining. Keep lining in place until final channels grading is finished.

Install inlet protection prior to diverting water through inlets.

Provide silt fence around all stockpiled excavated roadway material. Apply temporary mulch or temporary turf establishment to stockpiles remaining in place longer than 14 days or when directed by the CO.

Upon completion of culverts, ensure that culvert entrances, outlets, and outlet channels are at final grade and are stabilized (with vegetation, riprap or pavement) before routing drainage through completed culverts. Reroute offsite drainage through completed culverts as soon as is practical.

Once culvert headwalls are completed, install silt fence immediately behind headwalls and remove any silt fence blocking the culvert end(s).

Phase II E&S Control from Station 149+00 to 167+03.

1. Maintain diversion berm from Sediment Basin 1 to Station 163+03 as roadway excavation and fill progresses.
2. Construct diversion channel with aggregate that is accessible for construction equipment at Station 151+20 for diversion of sediment laden runoff of Sediment Basin 1.
3. Finalize grading cut ditch left side and rough grading of roadway.
4. Install storm sewer system D1-8 to D1-11, D1-1 to D3-4, excluding the outfall pipe and underdrain system.
5. Two weeks prior to the installation of the outfall pipe from D1-4 to D1-5, contact and notify Fairfax County Water Supervising Inspector at 703-289-6350 to arrange for inspector on-site.
6. Install storm sewer outfall pipe from D1-4 to D1-5 and install temporary pipe plug with water tight connection at pipe outfall.
7. Perform fine grading operation and place Rolled Erosion Control product (RECP) within cut ditch.
8. Maintain Sediment Basin 1 and perform final cleanout.

Phase II E&S Control from Station 167+03 to 182+50.

1. Maintain diversion berm outside of roadway footprint to Sediment Basin M4-1 and Sediment Basin 2.
2. Install wildlife crossing at Station 168+00.
3. Construct Mulligan Road Bridge across Kingman Road.
4. As placement of fill progresses, use slope drain pipes to drain top fill layer into Sediment Basin 2 and Sediment Basin M4-1. Place each lift so that the top of the fill drains from Station 182+00 to 169+20.
5. Construct entrance drive to SWM Basin 2.
6. As roadway construction approaches final grade, install storm sewer system and underdrains.
7. Perform fine grading operations.

Phase II E&S Control from Station 182+50 to 186+29.

1. Maintain diversion berm into Sediment Trap M6-1.
2. As placement of fill progresses use slope drain pipe to drain top fill layer into Sediment Trap M6-1.
3. As fill approaches final grade install Stormwater Management Infiltration Basin 4.
4. Install storm sewer and underdrain system.
5. Perform fine grading operations.

Phase II E&S Control from Station 186+29 to 200+84.

1. Install roadway ditches on the right side from Station 189+00 to 191+50 and maintain diversion berms and perimeter controls.
2. Install cross drain pipe at Station 190+80.
3. As placement of fill progresses, use slope drain pipe to drain top fill lift into Sediment Basin 6. Maintain positive drainage of top lift surface to drain from 186+29 to 195+05 and from Station 200+84 to 195+05.
4. As fill slope approaches final grade, construct storm sewers, underdrain systems and the access road to SWM Basin 6.
5. Perform fine grading operations and place RECP in cut ditch on the left side.

Phase II E&S Control from Station 200+84 to 220+50.

A. Channel Modification

1. Place sandbag berm along the bottom of the west bank of Piney Run at Station 220+50 on the left side during low flow period and direct flow away from the west bank. Dewater and filter as necessary.
2. Excavate eroding and vertical west bank to side slope indicated on the plans.
3. Perform excavation for the relocation of the Tributary of Piney Run at Station 219+00 and 220+00 on the left side, starting at the downstream end. Remove the substrate material (existing channel bed material) of the existing channel and place it at the bottom of the newly relocated channel. Stabilize side slopes of new relocated channel with RECP, and maintain flow through the existing channel until the relocated channel is stable.
4. After flow is diverted through the new relocated tributary channel, place fill in existing channel. Maintain sand bag berm at toe west bank of Piney Run until the existing filled in channel and the excavated west bank of Piney Run is stable.

B. Roadway Construction

1. Maintain diversions to Sediment Basin 7.
2. Finalize rough grading of roadway.
3. Construct diversion channel Sediment Basin 7 with aggregate that is accessible for construction equipment at Station 215+00.
4. Install storm sewer system from D9-1 to D11-12 and underdrain system. Prevent sediment laden water from entering structure D10-8.
5. Construct access road to SWM Basin 7
6. Perform fine grading operations and place RECP within cut ditch.
7. Abandon temporary diversion pipe at Station 209+05 and fill pipe with flowable fill.

Phase II E&S Control from Station 220+50 to 236+00.

1. Finalize construction of roadway ditches on the right side and install RECP.
2. As placement of fill progresses, use slope drain pipes to drain top fill lift into Sediment Trap M12-1.
3. Finalize rough grading of roadway.
4. Construct SWM 8, water quality swale and SWM No. 9 Infiltration Basin.
5. Install storm sewer systems and underdrain system.
6. Construct access road to SWM Basin 9.
7. Perform fine grading operations.

PHASE III (FINAL CONTROLS / STABILIZATION):

General:

After completion of roadway construction, do the following as directed by the CO:

After all upstream areas are stable, perform fine grading operations of SWM Basins 2,4,6,7, 8 and 9. For SWM Basins 2, 6 and 7, construct micro-pool, shallow and high marsh areas, forebay with gabions and riprap aprons. Remove the temporary dewatering system from the outfall structures, install Water Quality Orifice plate over the low flow opening, install debris rack and remove the temporary cover over the 2- year and 10-year weir openings for SWM Basins 2 and 6.

For SWM Infiltration Basins 4 and 9, place RECP lining over the top of overflow berm, place seed and mulch on all side slopes. For SWM Basin 8, install RECP lining, rock check dams, riprap aprons and seed and mulch all exposed areas.

Finish grading, installation of riprap, and apply permanent turf establishment to any remaining plastic lined channels after removing the plastic lining. Where necessary, replace topsoil and reapply permanent turf establishment to disturbed areas where vegetation has not established. Remove silt fence and inlet protection only after all upslope areas are stabilized and vegetation is well established. Remove all fill slope perimeter berms and perimeter silt fence only after toe-of-fill ditches have stabilized and vegetation is well established. Remove all other perimeter controls when directed by the CO.

4.0. PERMANENT STABILIZATION MEASURES

Permanent stabilization practices used on this project include riprap, aggregate base stone, erosion control mats, permanent seeding with mulching, sodding, groundcover plantings, preservation of existing vegetation and other approved measures.

U.S. DEPARTMENT OF TRANSPORTATION
FEDERAL HIGHWAY ADMINISTRATION
EASTERN FEDERAL LANDS HIGHWAY DIVISION
STERLING, VIRGINIA

FORT BELVOIR - MULLIGAN ROAD

E&S Control Narrative and Sequence of Construction

6/18/2008 9:56:22 AM C:\PWworking\FITT\dms60567\M.dgn

REG	STATE	PROJECT	SHEET NO.
-	VA	VA-A-AD-48(1)	M1

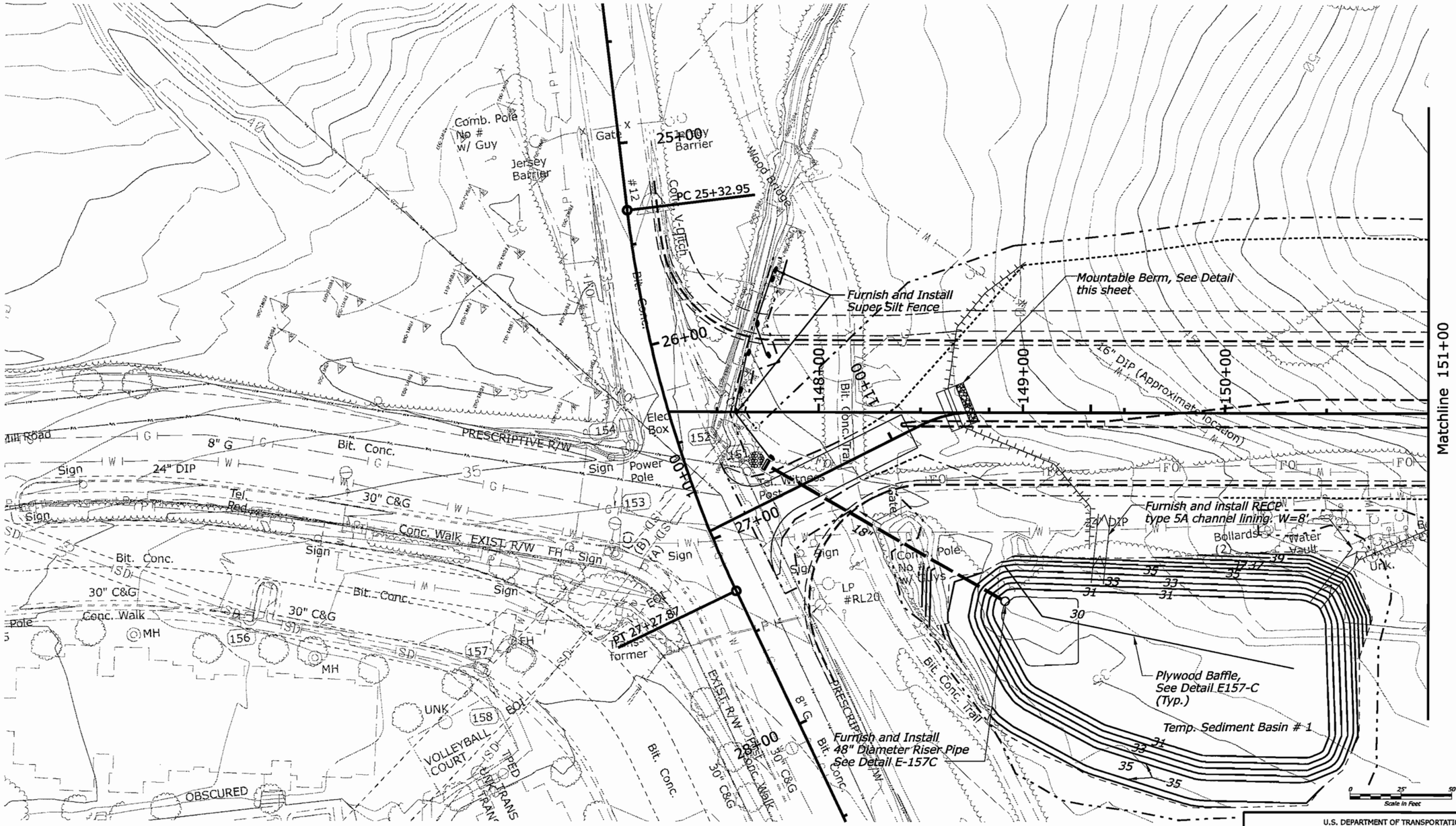

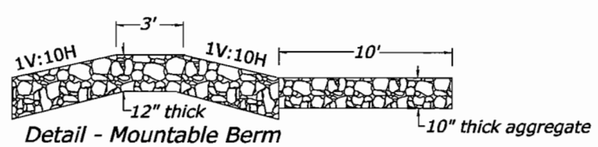

Detail - Mountable Berm

U.S. DEPARTMENT OF TRANSPORTATION
FEDERAL HIGHWAY ADMINISTRATION
EASTERN FEDERAL LANDS HIGHWAY DIVISION
STERLING, VIRGINIA

FORT BELVOIR - MULLIGAN ROAD

EROSION & SEDIMENT CONTROL PLAN - PHASE I

Mulligan Road
147+25.96 to 151+00

Sheet 1 of 28

6/19/2008 3:53:46 PM C:\PWworking\PITT\dms60567\M1.dgn

REG	STATE	PROJECT	SHEET NO.
-	VA	VA-A-AD-48(1)	M1B

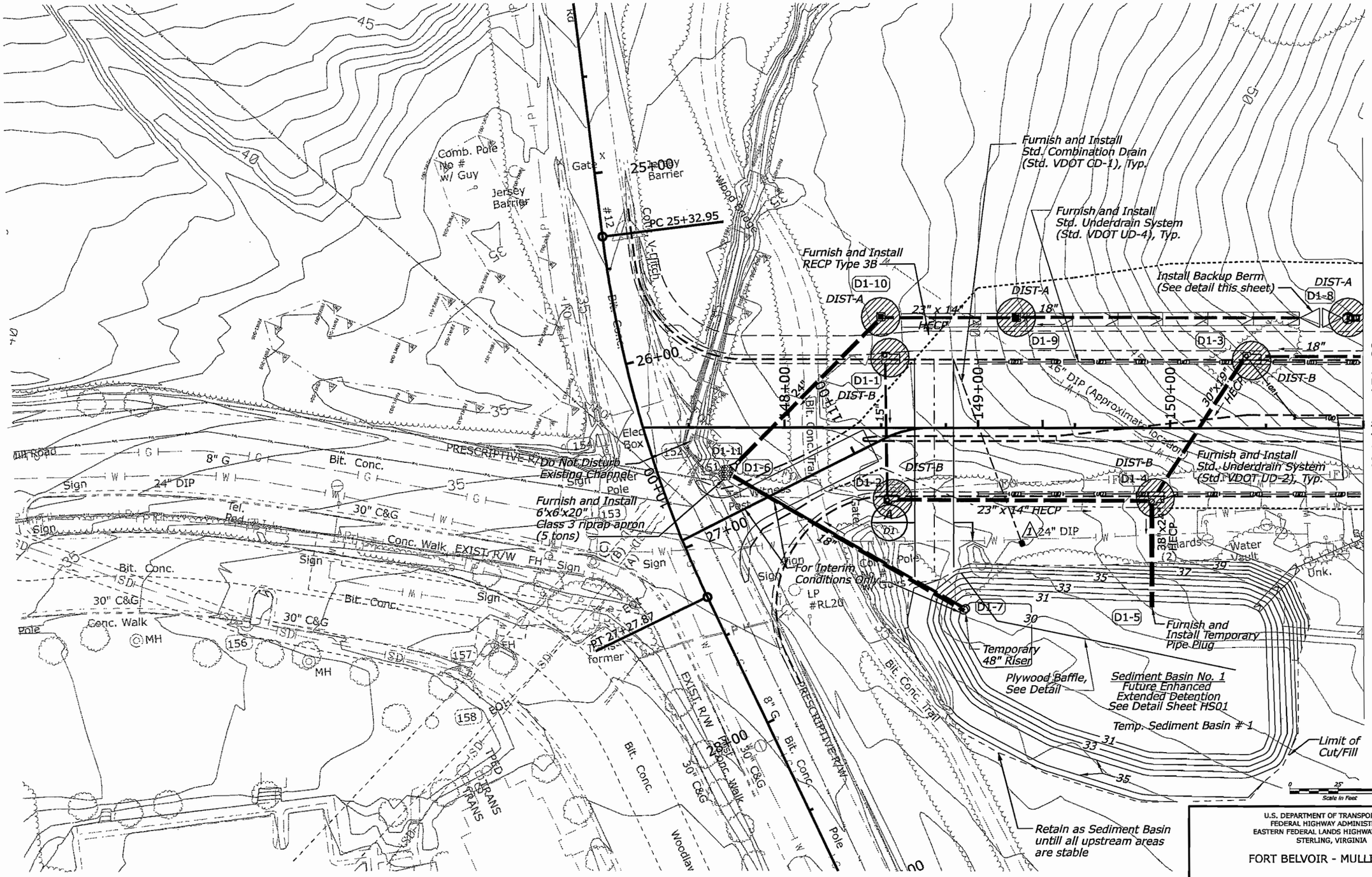

U.S. DEPARTMENT OF TRANSPORTATION
FEDERAL HIGHWAY ADMINISTRATION
EASTERN FEDERAL LANDS HIGHWAY DIVISION
STERLING, VIRGINIA

FORT BELVOIR - MULLIGAN ROAD

EROSION & SEDIMENT CONTROL PLAN - PHASE II

Mulligan Road (Old Mill Road at Pole Road)
147+25.96 to 151+00

Sheet 2 of 28

6/19/2008 10:02:03 AM C:\PWworking\PITT\dms50567\M1b.dgn

REG	STATE	PROJECT	SHEET NO.
-	VA	VA-A-AD-48(1)	M2

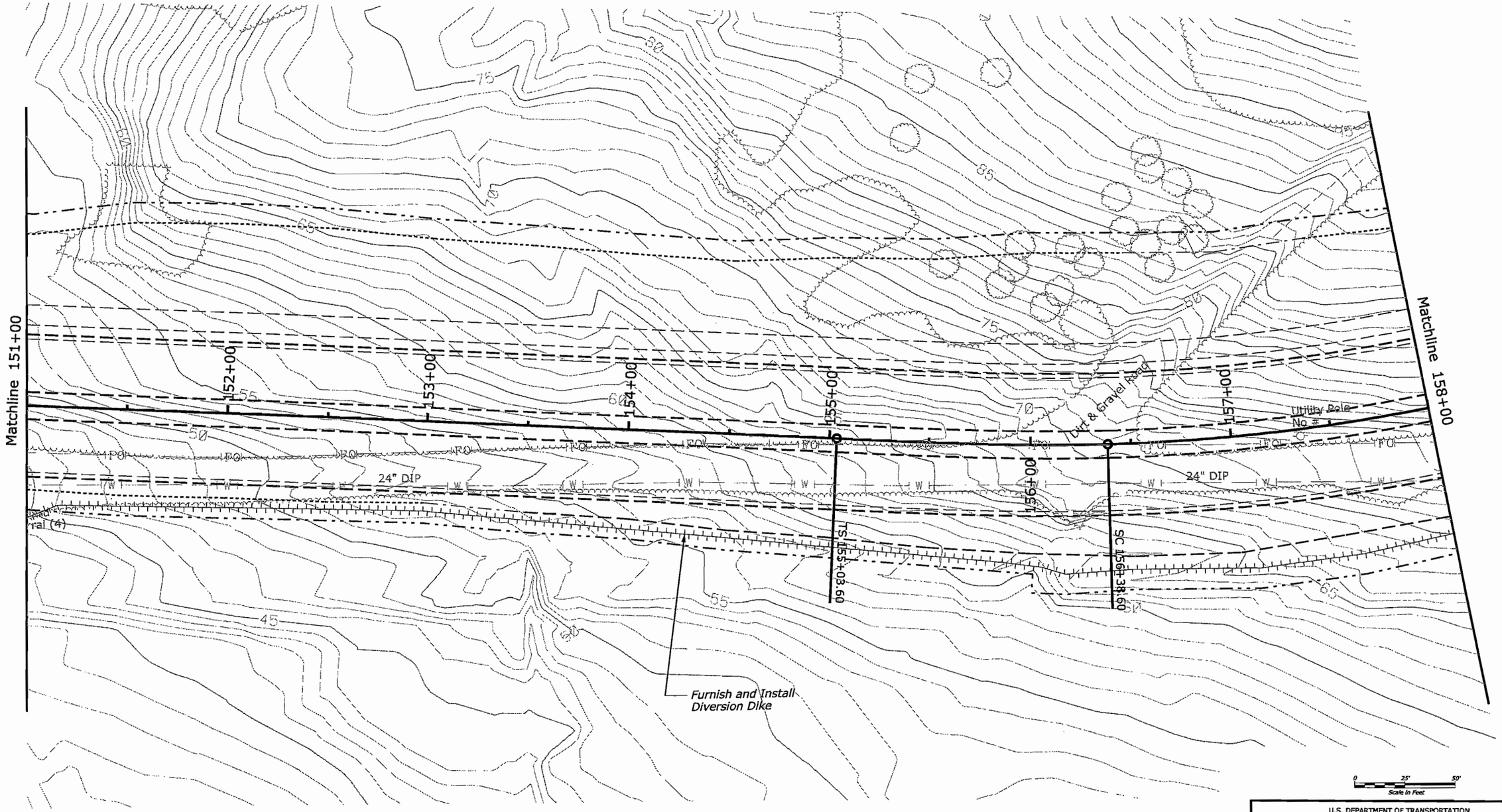

U.S. DEPARTMENT OF TRANSPORTATION
FEDERAL HIGHWAY ADMINISTRATION
EASTERN FEDERAL LANDS HIGHWAY DIVISION
STERLING, VIRGINIA

FORT BELVOIR - MULLIGAN ROAD

EROSION & SEDIMENT CONTROL PLAN - PHASE I

Mulligan Road
151+00 to 158+00

Sheet 3 of 28

6/18/2008 4:58:51 PM C:\PWworking\PITT\dms50567\M2.dgn

REG	STATE	PROJECT	SHEET NO.
-	VA	VA-A-AD-48(1)	M2B

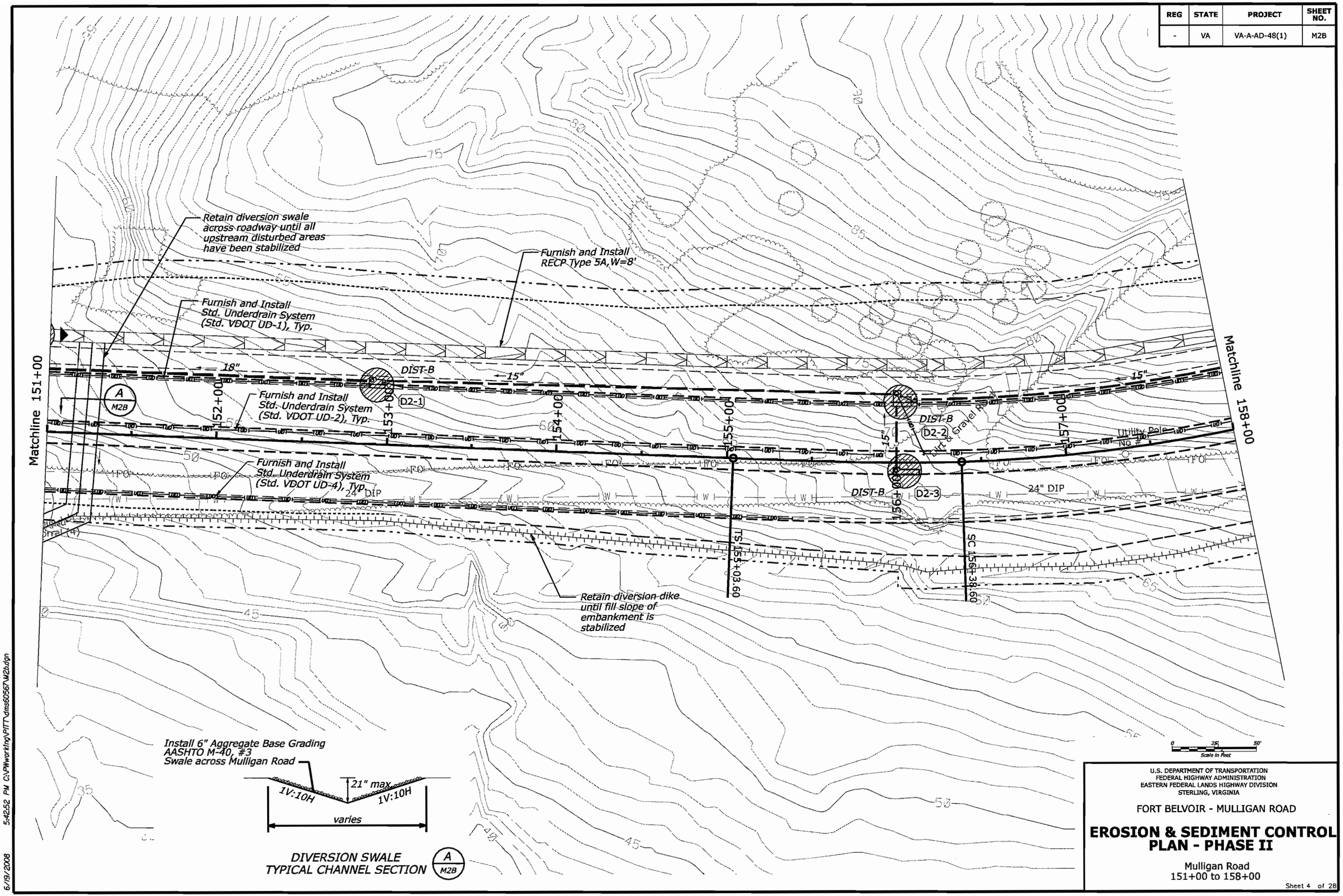

U.S. DEPARTMENT OF TRANSPORTATION
FEDERAL HIGHWAY ADMINISTRATION
EASTERN FEDERAL LANDS HIGHWAY DIVISION
STERLING, VIRGINIA

FORT BELVOIR - MULLIGAN ROAD

EROSION & SEDIMENT CONTROL PLAN - PHASE II

Mulligan Road
151+00 to 158+00

6/19/2008 5:42:52 PM C:\PWworking\PITT\dms60567\M2b.dgn

REG	STATE	PROJECT	SHEET NO.
-	VA	VA-A-AD-48(1)	M3

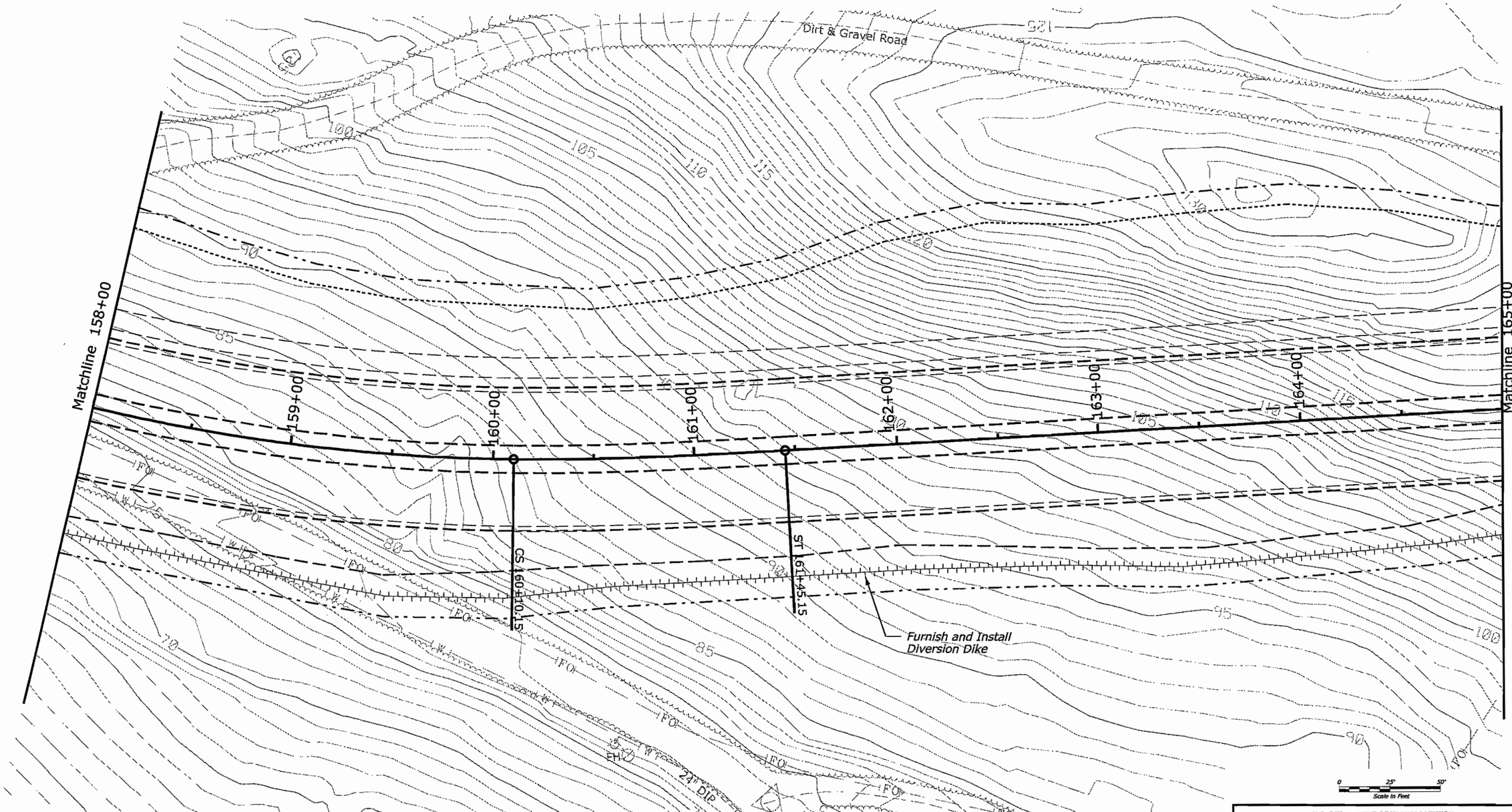

U.S. DEPARTMENT OF TRANSPORTATION
FEDERAL HIGHWAY ADMINISTRATION
EASTERN FEDERAL LANDS HIGHWAY DIVISION
STERLING, VIRGINIA

FORT BELVOIR - MULLIGAN ROAD

EROSION & SEDIMENT CONTROL PLAN - PHASE I

Mulligan Road
158+00 to 165+00

6/18/2008 2:04:36 PM C:\PWworking\FITT\dms60567\M3.dgn

REG	STATE	PROJECT	SHEET NO.
-	VA	VA-A-AD-48(1)	M3B

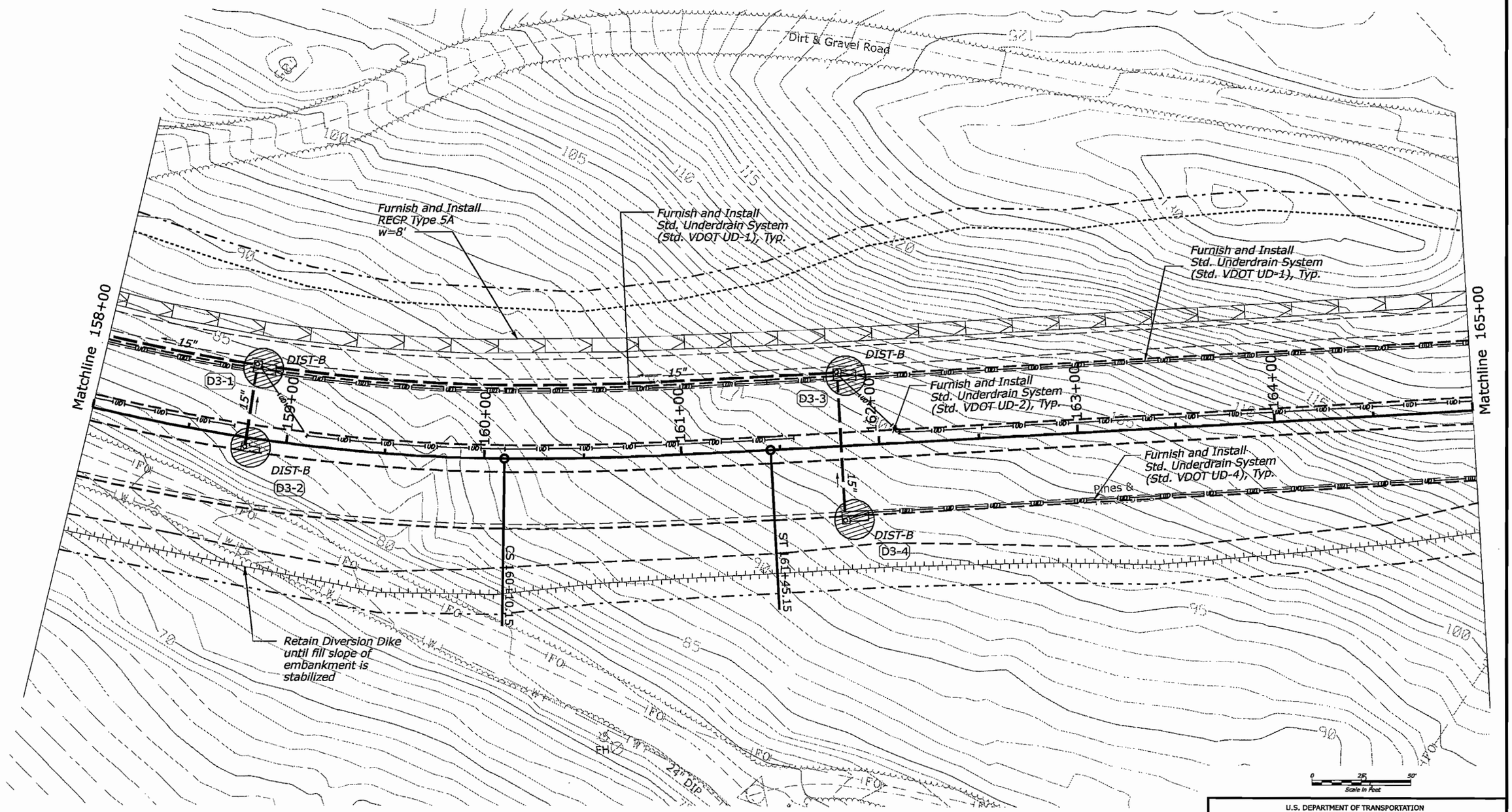

U.S. DEPARTMENT OF TRANSPORTATION
FEDERAL HIGHWAY ADMINISTRATION
EASTERN FEDERAL LANDS HIGHWAY DIVISION
STERLING, VIRGINIA

FORT BELVOIR - MULLIGAN ROAD

EROSION & SEDIMENT CONTROL PLAN - PHASE II

Mulligan Road
158+00 to 165+00

Sheet 6 of 28

6/18/2008 3:33:22 PM C:\PWworking\PITT\dms60567\M3b.dgn

REG	STATE	PROJECT	SHEET NO.
-	VA	VA-A-AD-48(1)	M4

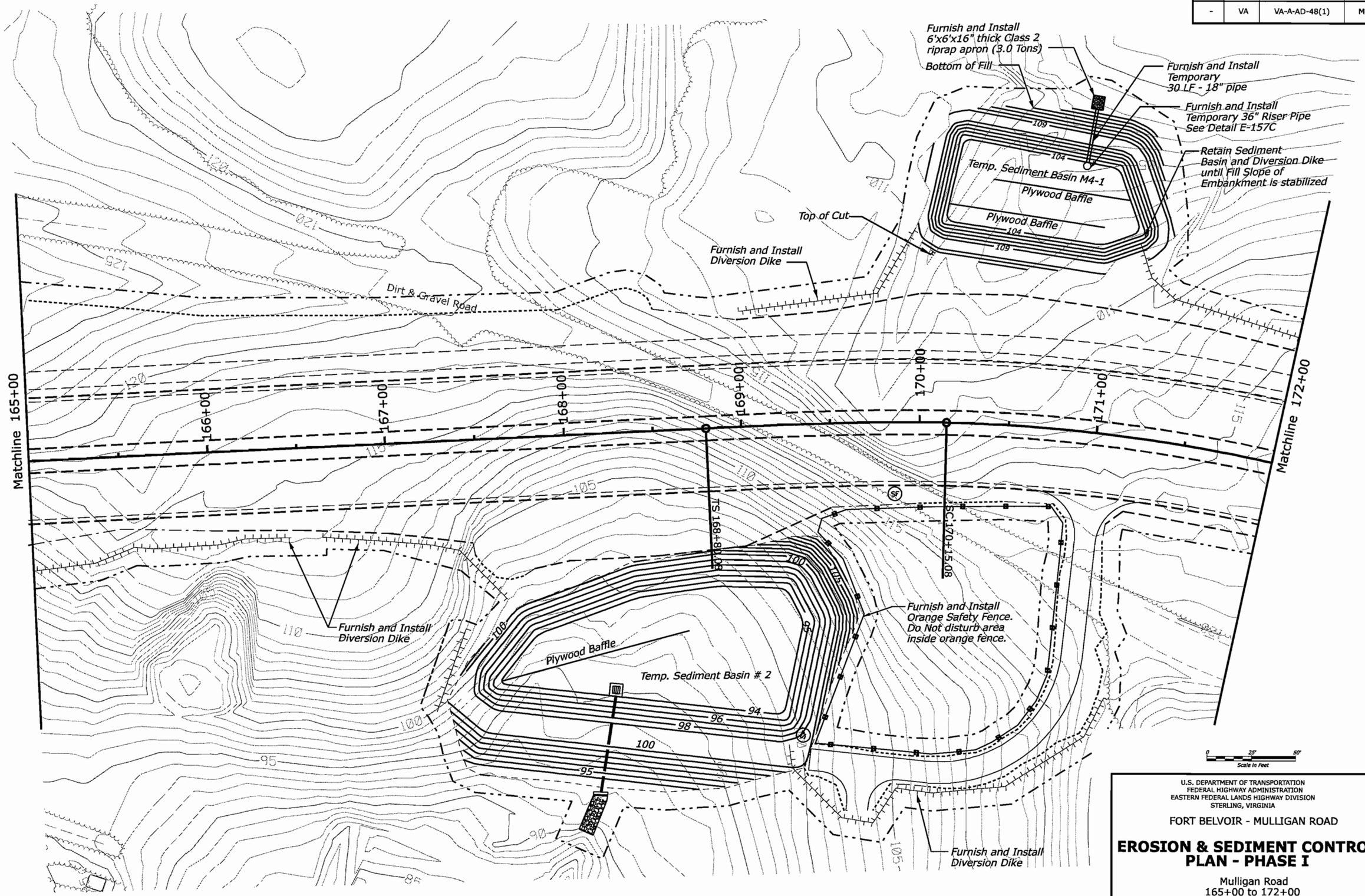

U.S. DEPARTMENT OF TRANSPORTATION
FEDERAL HIGHWAY ADMINISTRATION
EASTERN FEDERAL LANDS HIGHWAY DIVISION
STERLING, VIRGINIA

FORT BELVOIR - MULLIGAN ROAD

EROSION & SEDIMENT CONTROL PLAN - PHASE I

Mulligan Road
165+00 to 172+00

6/19/2008 3:56:18 PM C:\PWworking\PITT\dms60567\M4.dgn

REG	STATE	PROJECT	SHEET NO.
-	VA	VA-A-AD-48(1)	M4B

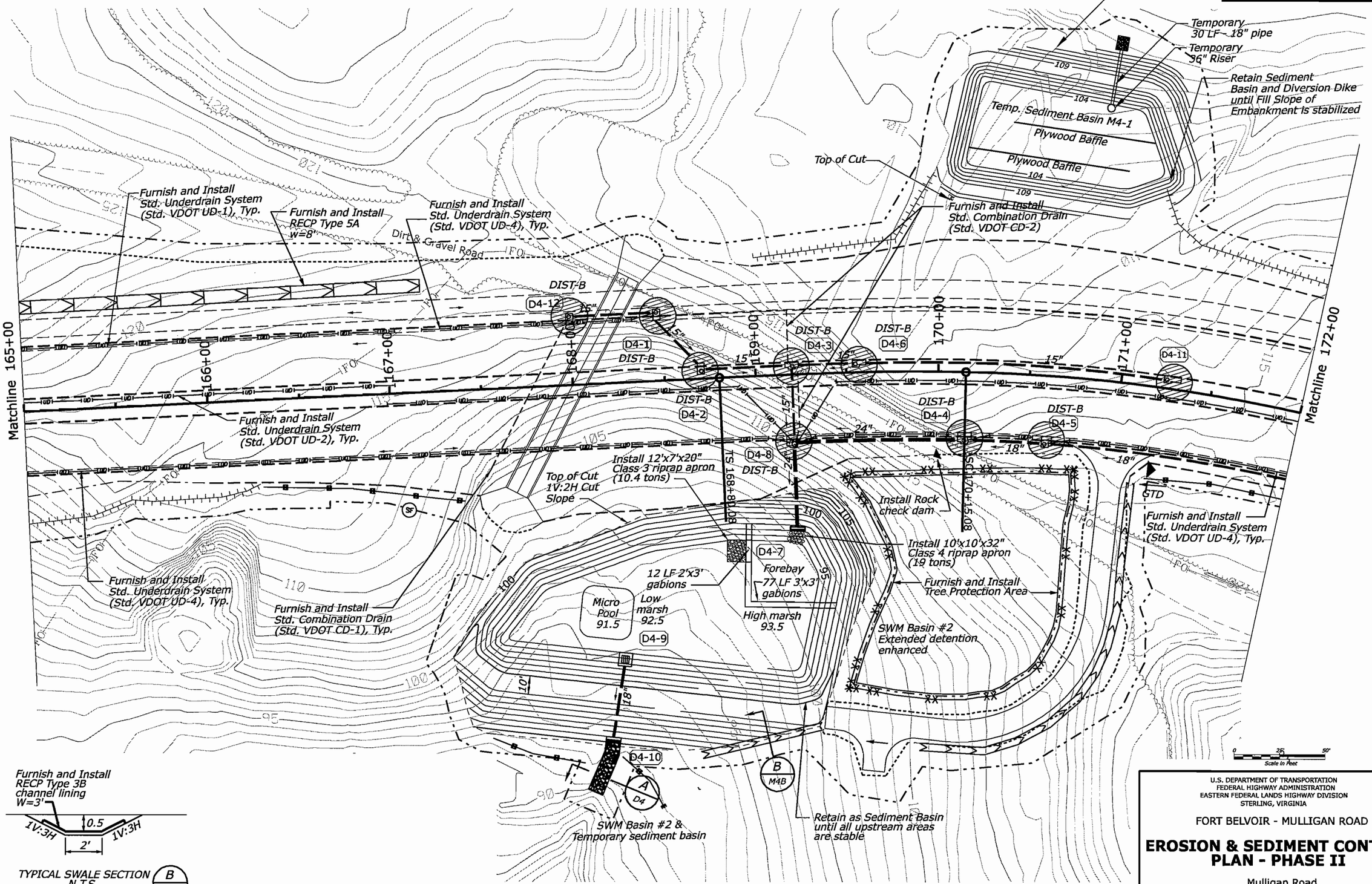

U.S. DEPARTMENT OF TRANSPORTATION
FEDERAL HIGHWAY ADMINISTRATION
EASTERN FEDERAL LANDS HIGHWAY DIVISION
STERLING, VIRGINIA

FORT BELVOIR - MULLIGAN ROAD

EROSION & SEDIMENT CONTROL PLAN - PHASE II

Mulligan Road
165+00 to 172+00

6/19/2008 5:44:03 PM C:\PWworking\PITT\dms60567\M4b.dgn

REG	STATE	PROJECT	SHEET NO.
-	VA	VA-A-AD-48(1)	M5

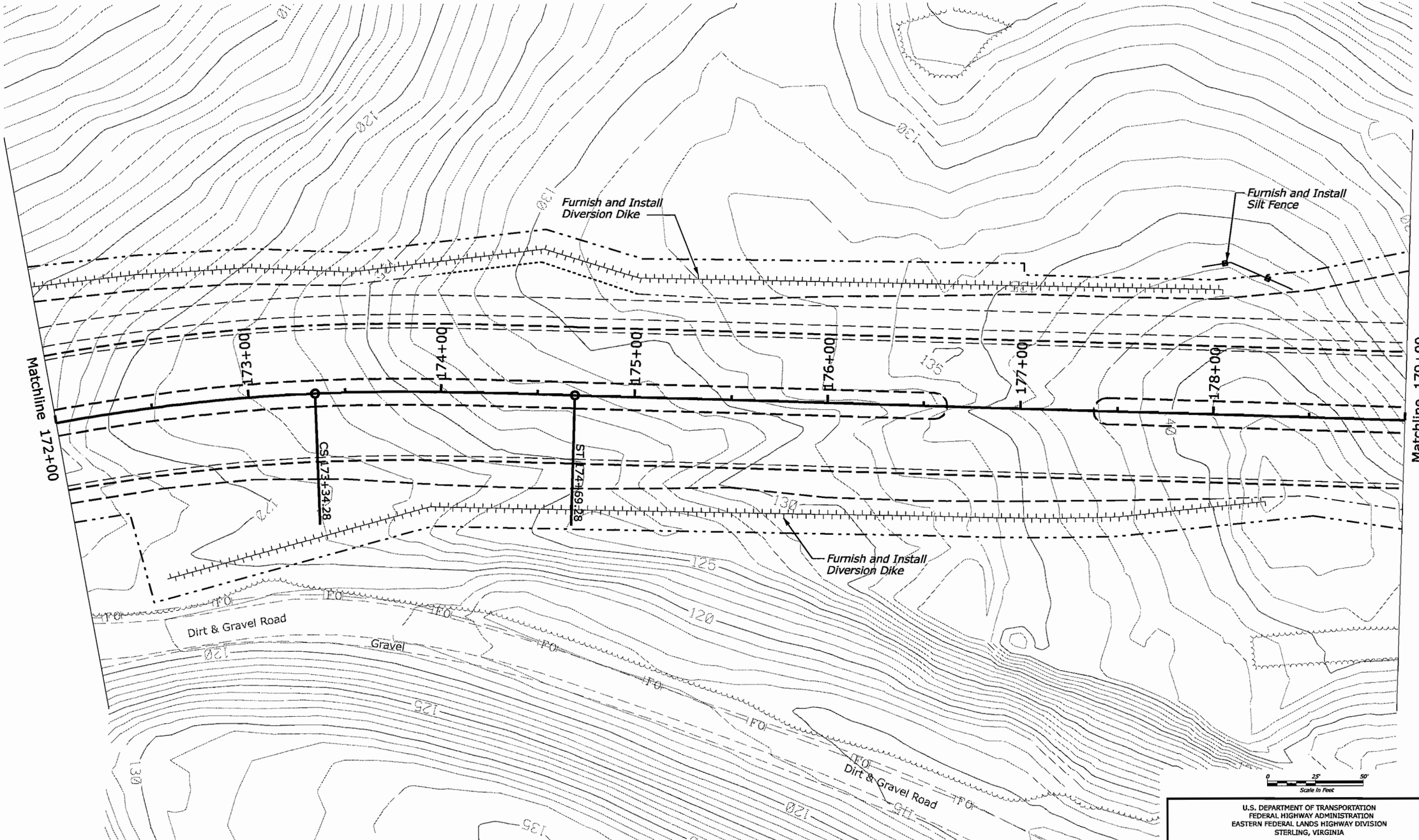

U.S. DEPARTMENT OF TRANSPORTATION
FEDERAL HIGHWAY ADMINISTRATION
EASTERN FEDERAL LANDS HIGHWAY DIVISION
STERLING, VIRGINIA

FORT BELVOIR - MULLIGAN ROAD

EROSION & SEDIMENT CONTROL PLAN - PHASE I

Mulligan Road
172+00 to 179+00

Sheet 9 of 28

6/19/2008 3:57:14 PM C:\PWworking\PITT\dms50567\M5.dgn

REG	STATE	PROJECT	SHEET NO.
-	VA	VA-A-AD-48(1)	M5B

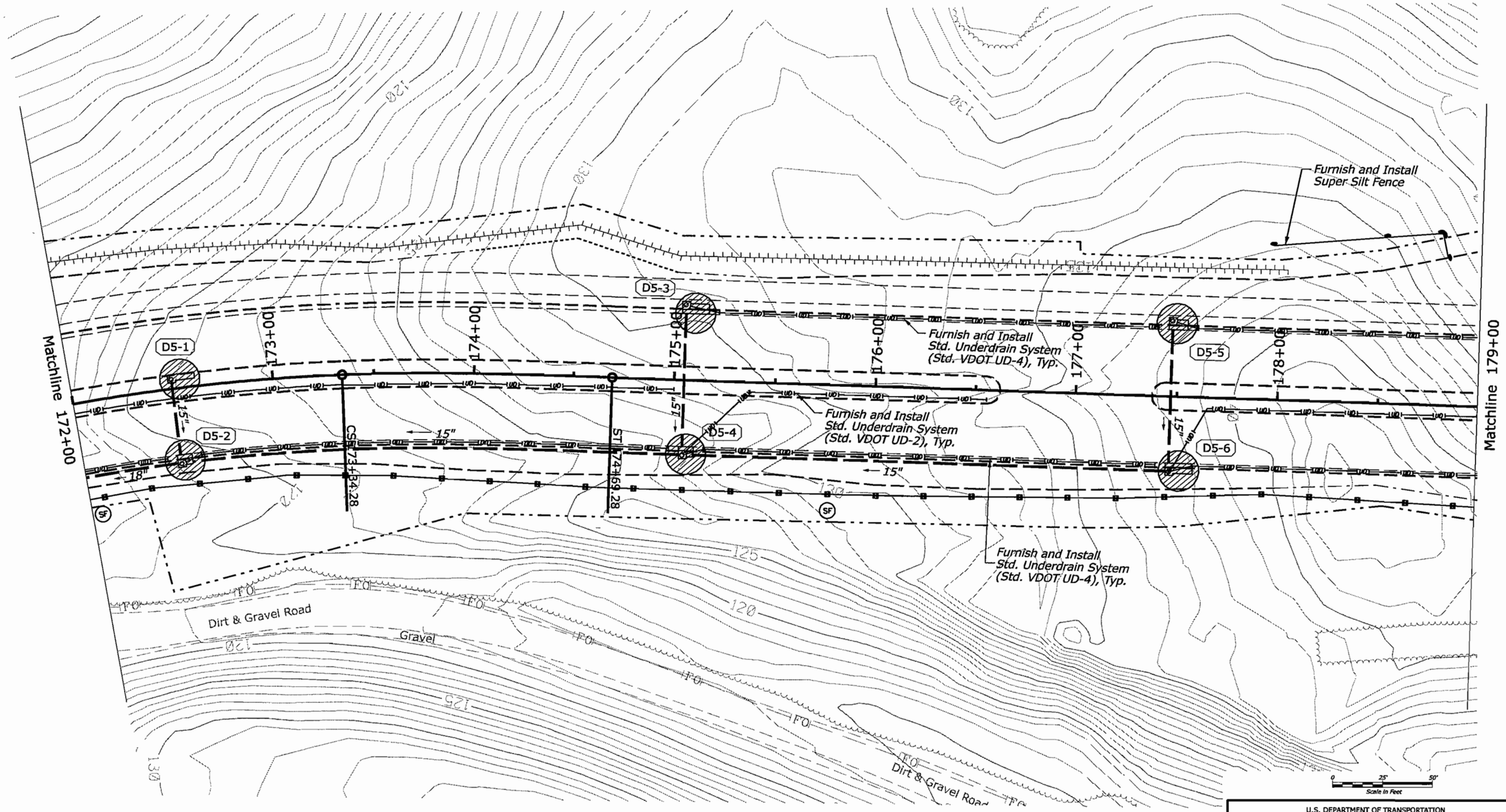

U.S. DEPARTMENT OF TRANSPORTATION
FEDERAL HIGHWAY ADMINISTRATION
EASTERN FEDERAL LANDS HIGHWAY DIVISION
STERLING, VIRGINIA

FORT BELVOIR - MULLIGAN ROAD

EROSION & SEDIMENT CONTROL PLAN - PHASE II

Mulligan Road
172+00 to 179+00

6/19/2008 5:44:56 PM C:\PWworking\PITT\dms60567\M5b.dgn

REG	STATE	PROJECT	SHEET NO.
-	VA	VA-A-AD-48(1)	M6

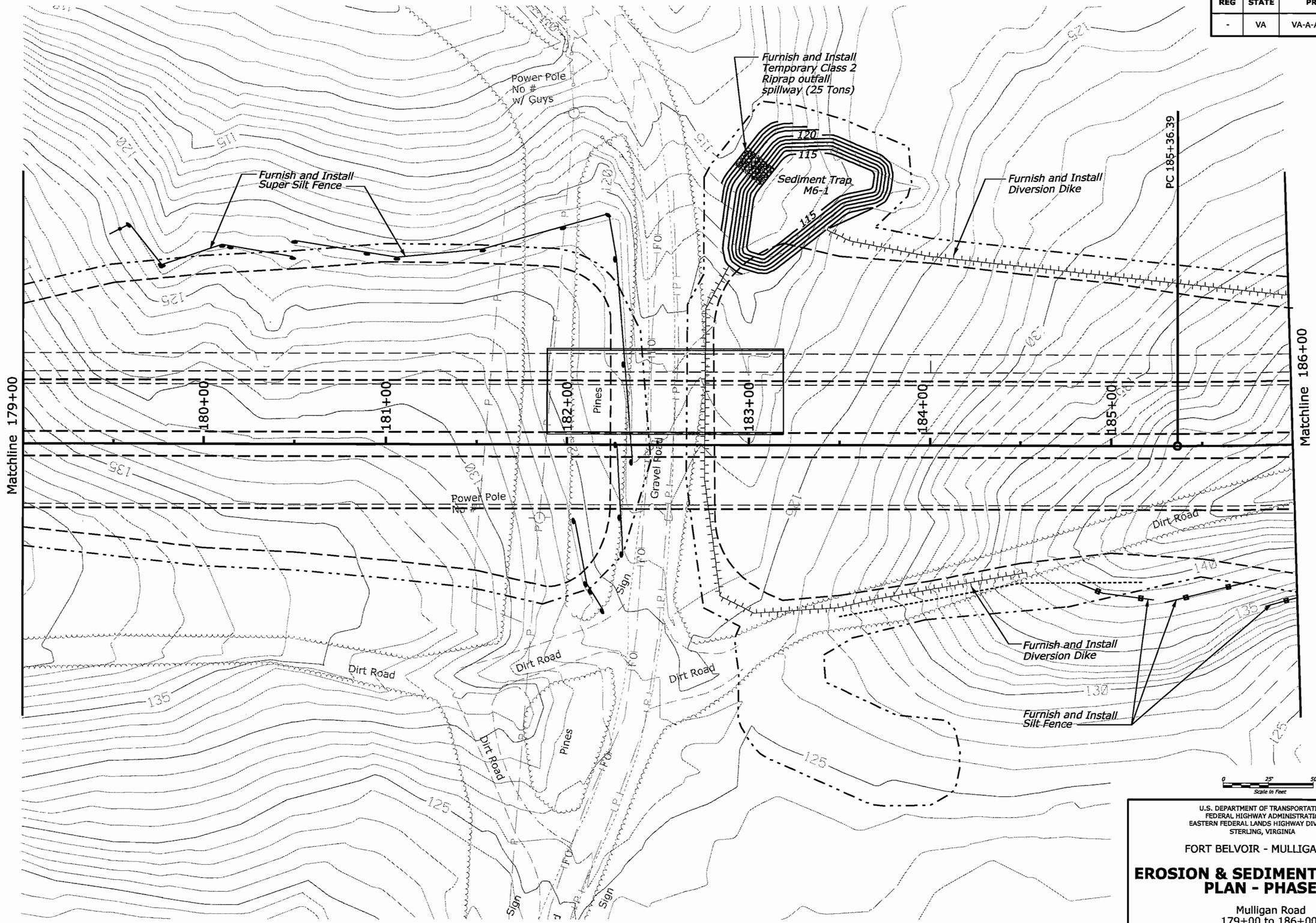

U.S. DEPARTMENT OF TRANSPORTATION
FEDERAL HIGHWAY ADMINISTRATION
EASTERN FEDERAL LANDS HIGHWAY DIVISION
STERLING, VIRGINIA

FORT BELVOIR - MULLIGAN ROAD

EROSION & SEDIMENT CONTROL PLAN - PHASE I

Mulligan Road
179+00 to 186+00

6/20/2008 8:26:51 AM c:\pwworking\plit\dms60567\M6.dgn

REG	STATE	PROJECT	SHEET NO.
-	VA	VA-A-AD-48(1)	M6B

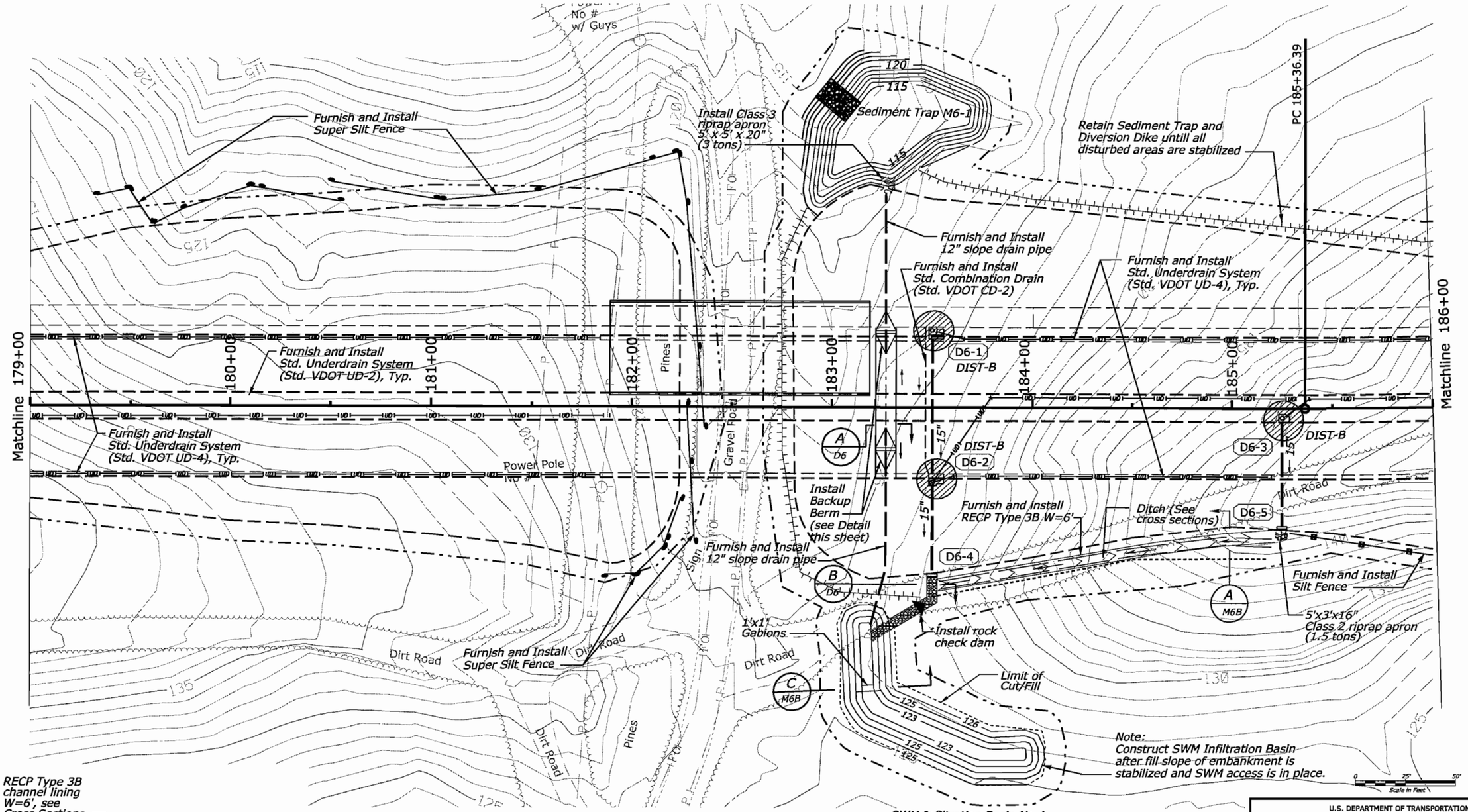

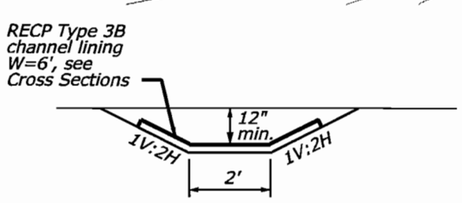

TYPICAL CHANNEL SECTION N.T.S. (A / M6B)

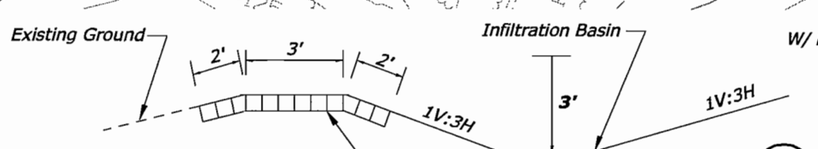

RECP 5C with aggregate topsoil (pyromat, geoweb or approved equal)

Typical Channel Section Infiltration Basin with Level Spreader (C / M6B)

U.S. DEPARTMENT OF TRANSPORTATION
FEDERAL HIGHWAY ADMINISTRATION
EASTERN FEDERAL LANDS HIGHWAY DIVISION
STERLING, VIRGINIA

FORT BELVOIR - MULLIGAN ROAD

EROSION & SEDIMENT CONTROL PLAN - PHASE II

Mulligan Road
179+00 to 186+00

Sheet 12 of 28

6/20/2008 8:28:53 AM c:\pwworking\jolth\dms60567\M6b.dgn

REG	STATE	PROJECT	SHEET NO.
-	VA	VA-A-AD-48(1)	M7

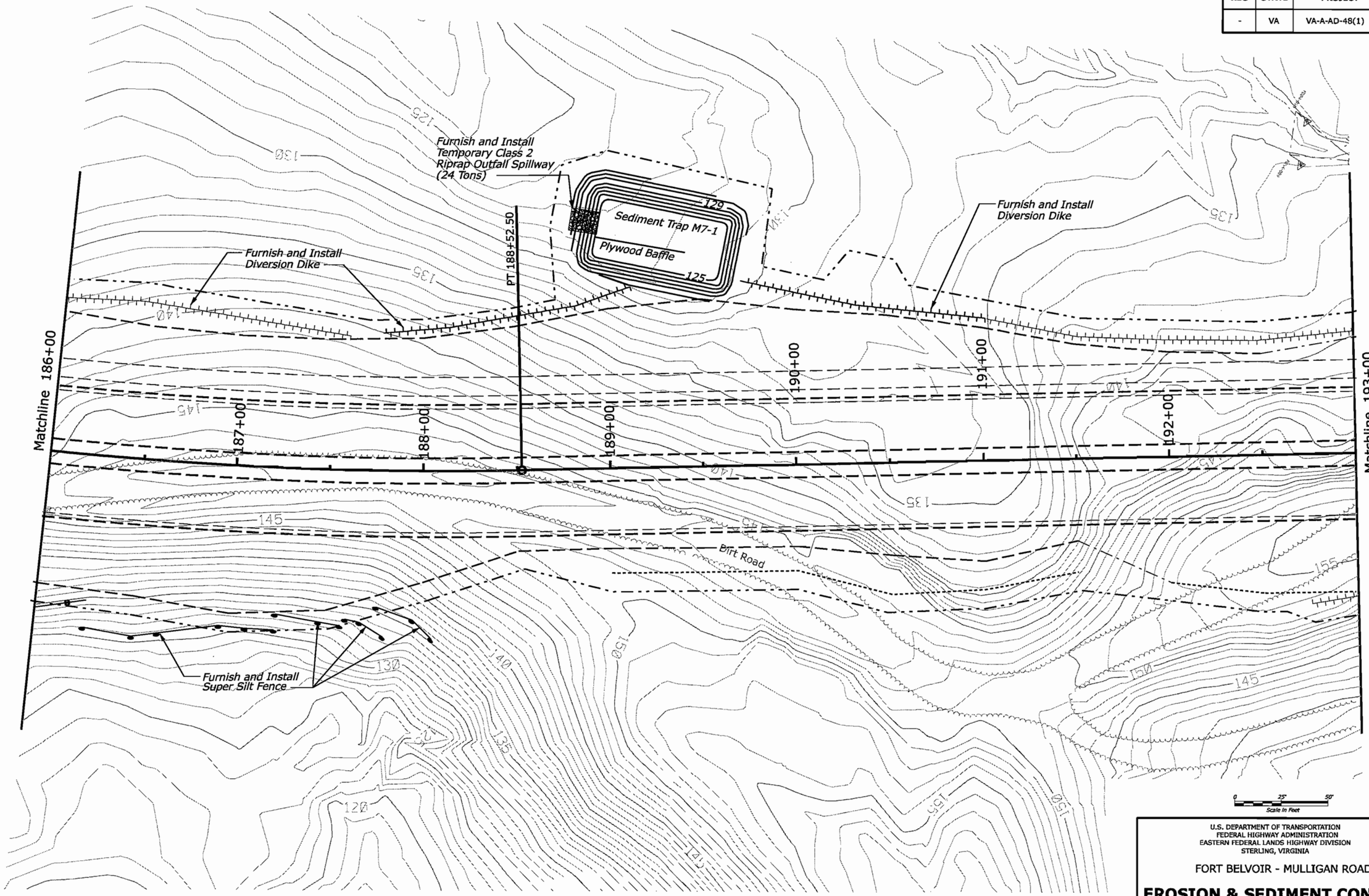

U.S. DEPARTMENT OF TRANSPORTATION
FEDERAL HIGHWAY ADMINISTRATION
EASTERN FEDERAL LANDS HIGHWAY DIVISION
STERLING, VIRGINIA

FORT BELVOIR - MULLIGAN ROAD

EROSION & SEDIMENT CONTROL PLAN - PHASE I

Mulligan Road
186+00 to 193+00

Sheet 13 of 28

6/19/2008 3:59:42 PM C:\PWworking\FITT\dms60567\M7.dgn

REG	STATE	PROJECT	SHEET NO.
-	VA	VA-A-AD-48(1)	M7B

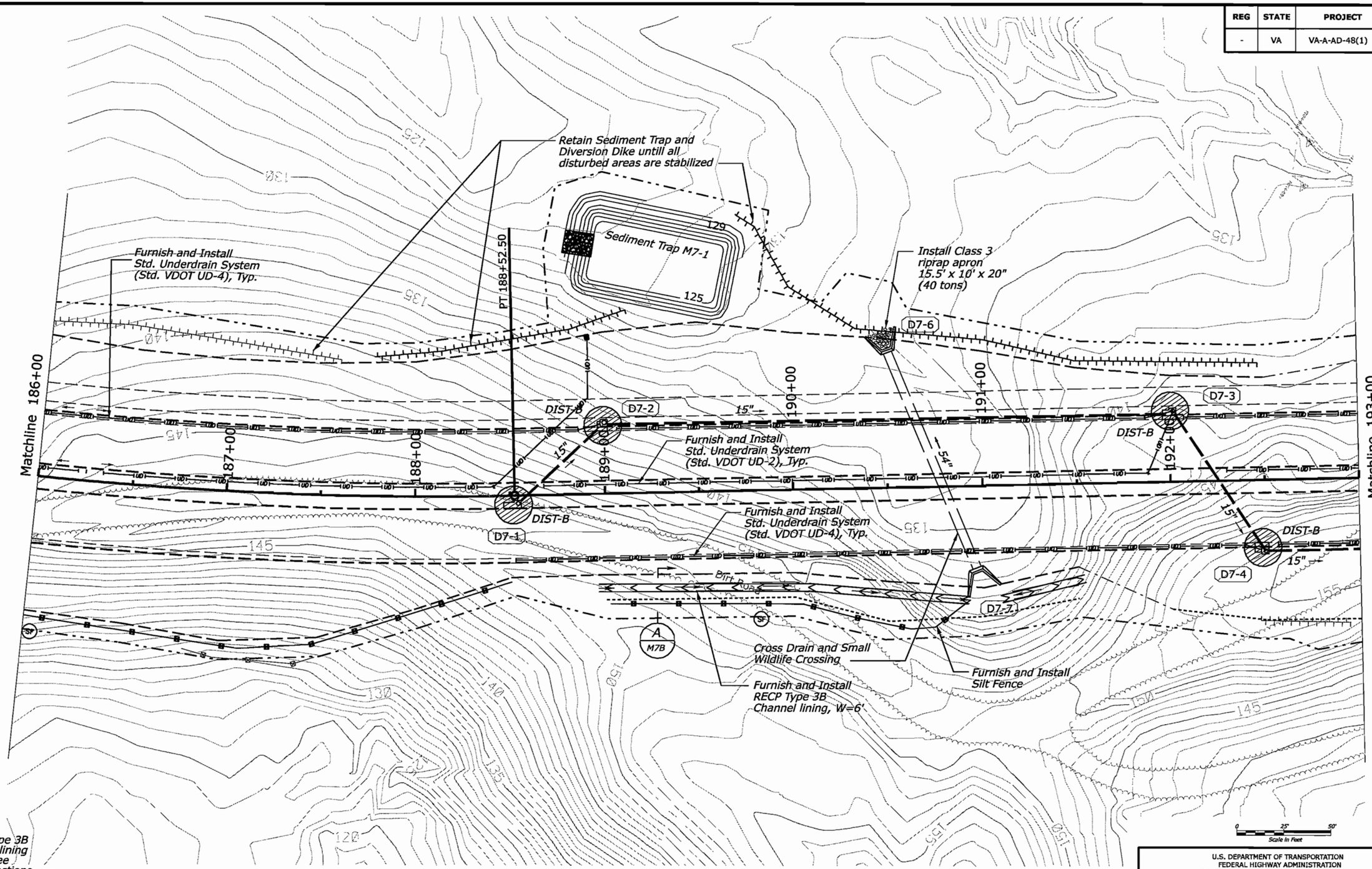

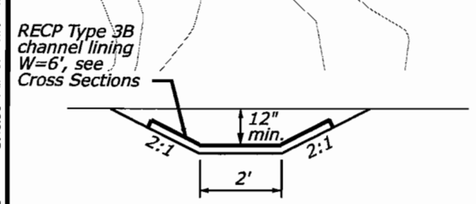

TYPICAL CHANNEL SECTION N.T.S.

A
M7B

U.S. DEPARTMENT OF TRANSPORTATION
FEDERAL HIGHWAY ADMINISTRATION
EASTERN FEDERAL LANDS HIGHWAY DIVISION
STERLING, VIRGINIA

FORT BELVOIR - MULLIGAN ROAD

EROSION & SEDIMENT CONTROL PLAN - PHASE II

Mulligan Road
186+00 to 193+00

6/19/2008 5:46:30 PM C:\PWworking\PITT\dms50567\M7b.dgn

REG	STATE	PROJECT	SHEET NO.
-	VA	VA-A-AD-48(1)	M8

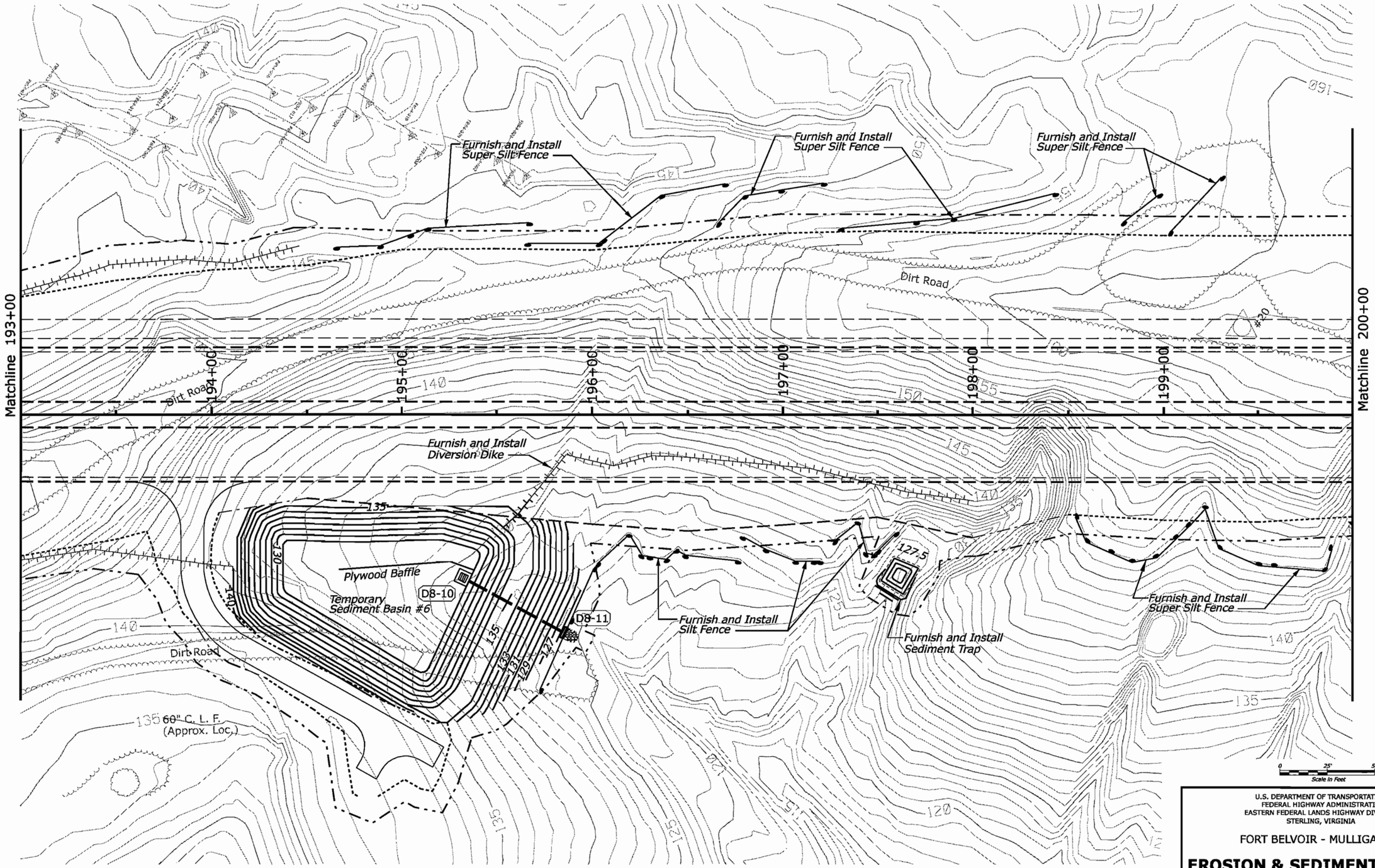

U.S. DEPARTMENT OF TRANSPORTATION
FEDERAL HIGHWAY ADMINISTRATION
EASTERN FEDERAL LANDS HIGHWAY DIVISION
STERLING, VIRGINIA

FORT BELVOIR - MULLIGAN ROAD

EROSION & SEDIMENT CONTROL PLAN -PHASE I

Mulligan Road
193+00 to 200+00

6/19/2008 4:04:33 PM C:\PWworking\FITT\dms50565\M8.dgn

REG	STATE	PROJECT	SHEET NO.
-	VA	VA-A-AD-48(1)	M8B

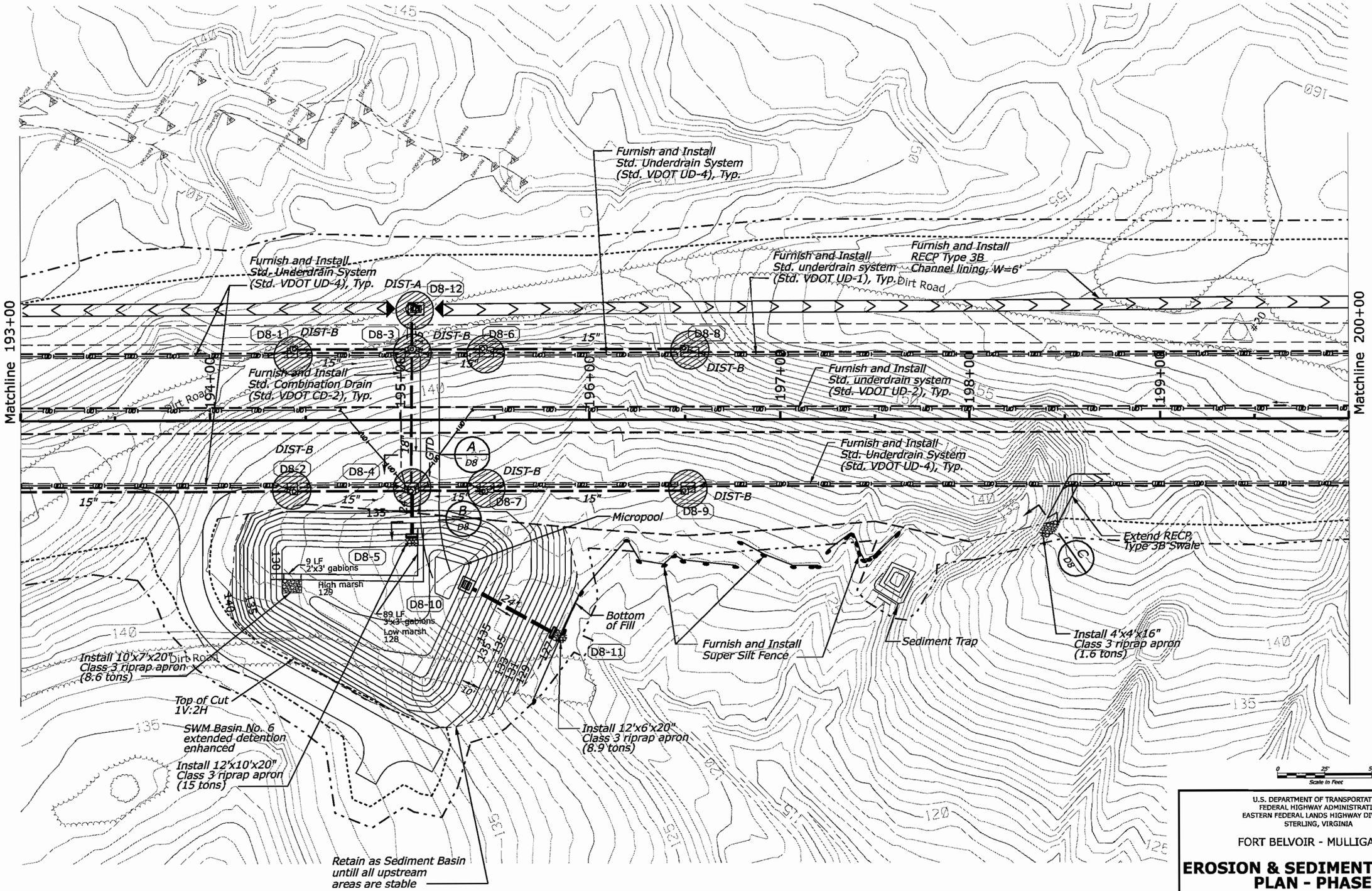

U.S. DEPARTMENT OF TRANSPORTATION
FEDERAL HIGHWAY ADMINISTRATION
EASTERN FEDERAL LANDS HIGHWAY DIVISION
STERLING, VIRGINIA

FORT BELVOIR - MULLIGAN ROAD

EROSION & SEDIMENT CONTROL PLAN - PHASE II

Mulligan Road
193+00 to 200+00

6/19/2008 5:49:26 PM C:\PWworking\PITT\dms60567\M8b.dgn

REG	STATE	PROJECT	SHEET NO.
-	VA	VA-A-AD-48(1)	M9

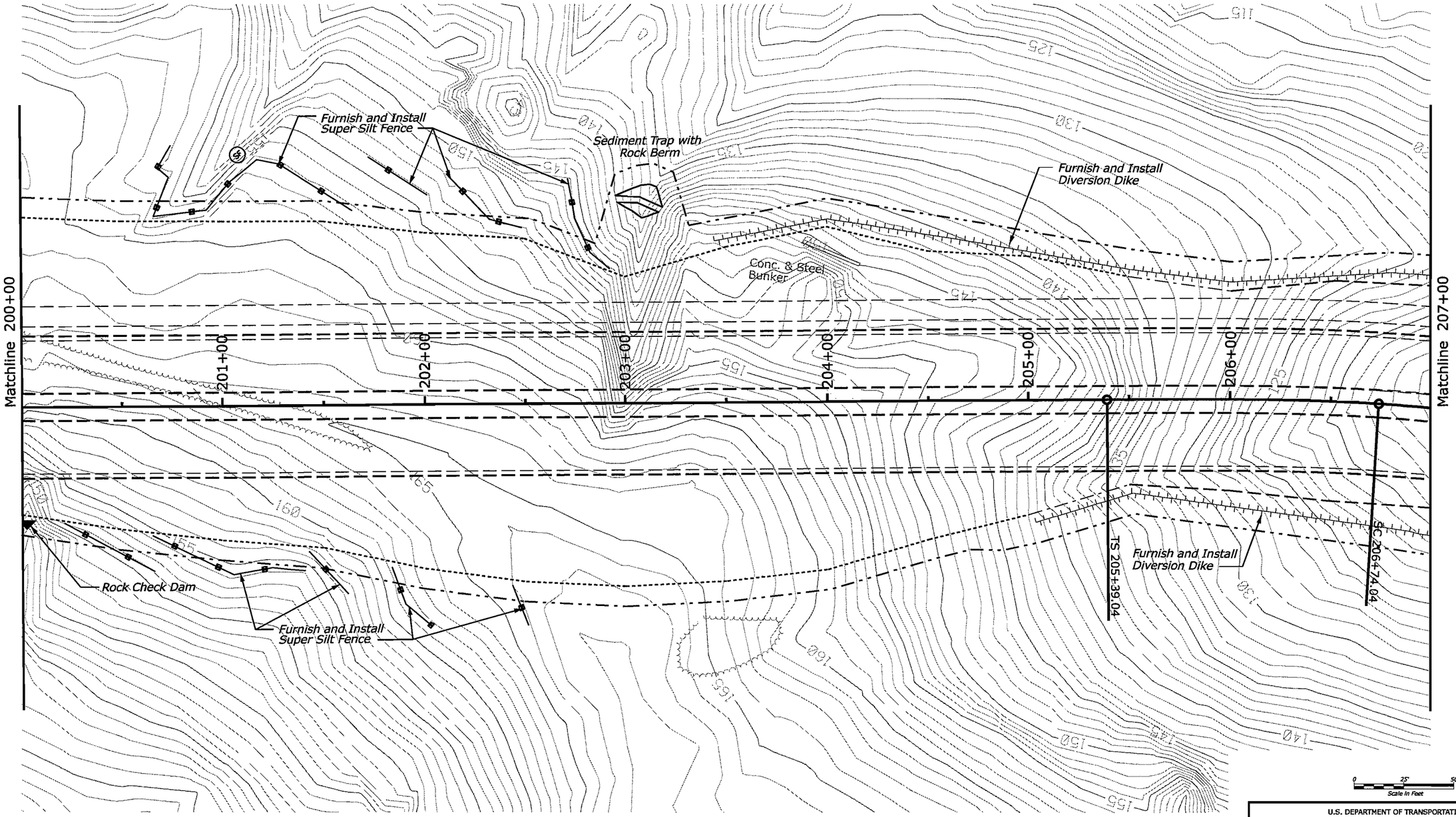

U.S. DEPARTMENT OF TRANSPORTATION
FEDERAL HIGHWAY ADMINISTRATION
EASTERN FEDERAL LANDS HIGHWAY DIVISION
STERLING, VIRGINIA

FORT BELVOIR - MULLIGAN ROAD

EROSION & SEDIMENT CONTROL PLAN - PHASE I

Mulligan Road
200+00 to 207+00

6/19/2008 4:05:58 PM C:\PWworking\PITT\dms60567\M9.dgn

REG	STATE	PROJECT	SHEET NO.
-	VA	VA-A-AD-48(1)	M9B

Furnish and Install
RECP Type 3B
Channel lining, W=6'

Furnish and Install
Std. Underdrain System
(Std. VDOT UD-1), Typ.

Remove bunker (Approx. 30' x 8'
Concrete Wall with Wingwalls)
to 2 feet below existing ground

Conc. & Steel
Bunker

D9-1

DIST-A

D9-2

DIST-B

Furnish and Install
Std. Underdrain System
(Std. VDOT UD-2), Typ.

Furnish and Install
Std. Combination Drain
(Std. VDOT CD-1), Typ.

Matchline 200+00

201+00

202+00

203+00

204+00

205+00

206+00

Matchline 207+00

Furnish and Install
Std. Underdrain System
(Std. VDOT UD-1), Typ.

15"

DIST-B

D9-3

15"

Install
20'x8'x12" thick
Class 2 riprap
apron (12 tons)

TS 205+39.04

Furnish and Install
Std. Underdrain System
(Std. VDOT UD-4), Typ.

A
M9B

SC 206+74.04

Furnish and Install
RECP Type 3B
Channel lining, W=6'

0 25' 50'
Scale In Feet

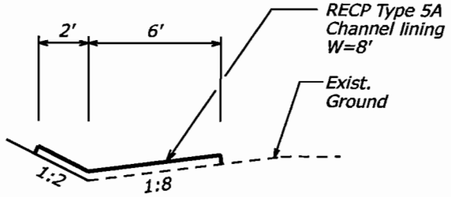

TYPICAL CHANNEL SECTION
N.T.S.

A
M9B

U.S. DEPARTMENT OF TRANSPORTATION
FEDERAL HIGHWAY ADMINISTRATION
EASTERN FEDERAL LANDS HIGHWAY DIVISION
STERLING, VIRGINIA

FORT BELVOIR - MULLIGAN ROAD

EROSION & SEDIMENT CONTROL PLAN - PHASE II

Mulligan Road
200+00 to 207+00

Sheet 18 of 28

6/19/2008 5:50:23 PM C:\PWworking\PITT\dms60567\M9b.dgn

REG	STATE	PROJECT	SHEET NO.
-	VA	VA-A-AD-48(1)	M10

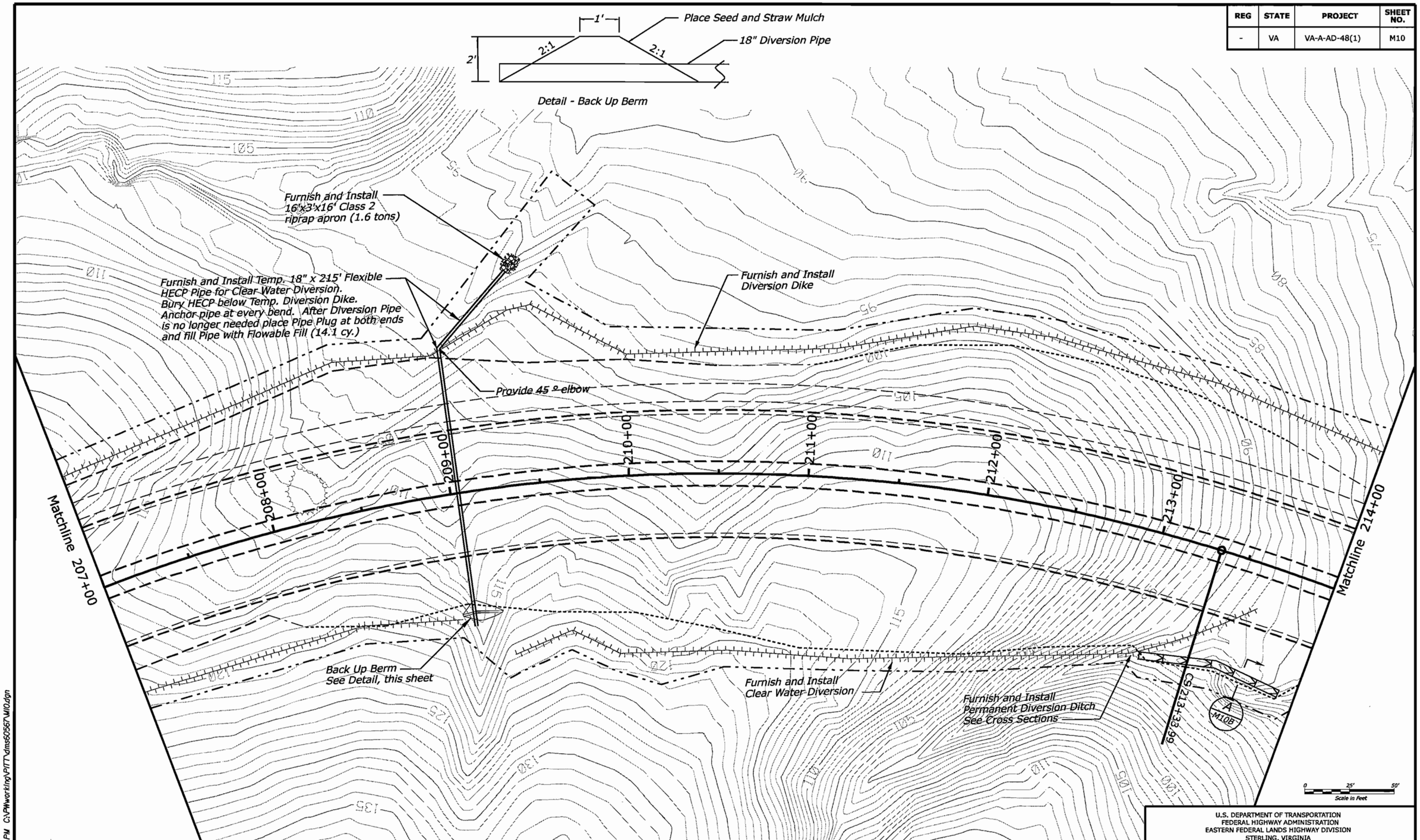

U.S. DEPARTMENT OF TRANSPORTATION
FEDERAL HIGHWAY ADMINISTRATION
EASTERN FEDERAL LANDS HIGHWAY DIVISION
STERLING, VIRGINIA

FORT BELVOIR - MULLIGAN ROAD

EROSION & SEDIMENT CONTROL PLAN - PHASE I

Mulligan Road
207+00 to 214+00

Sheet 19 of 28

6/19/2008 4:07:24 PM C:\PWworking\PITT\dms60567\M10.dgn

REG	STATE	PROJECT	SHEET NO.
-	VA	VA-A-AD-48(1)	M10B

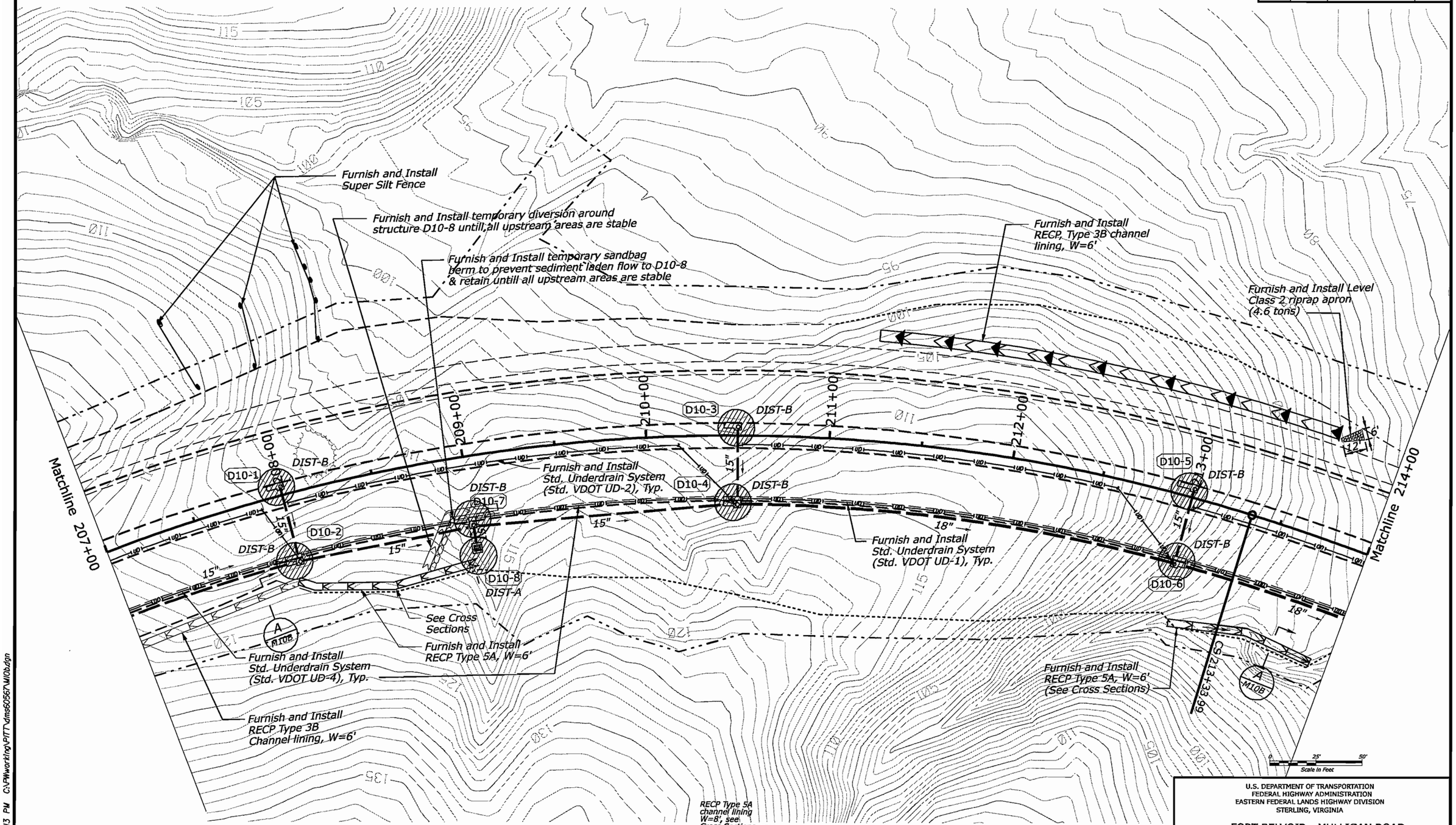

U.S. DEPARTMENT OF TRANSPORTATION
FEDERAL HIGHWAY ADMINISTRATION
EASTERN FEDERAL LANDS HIGHWAY DIVISION
STERLING, VIRGINIA

FORT BELVOIR - MULLIGAN ROAD

EROSION & SEDIMENT CONTROL PLAN - PHASE II

Mulligan Road
207+00 to 214+00

6/19/2008 5:51:13 PM C:\PWworking\PITT\dms50567\M10b.dgn

REG	STATE	PROJECT	SHEET NO.
-	VA	VA-A-AD-48(1)	M11

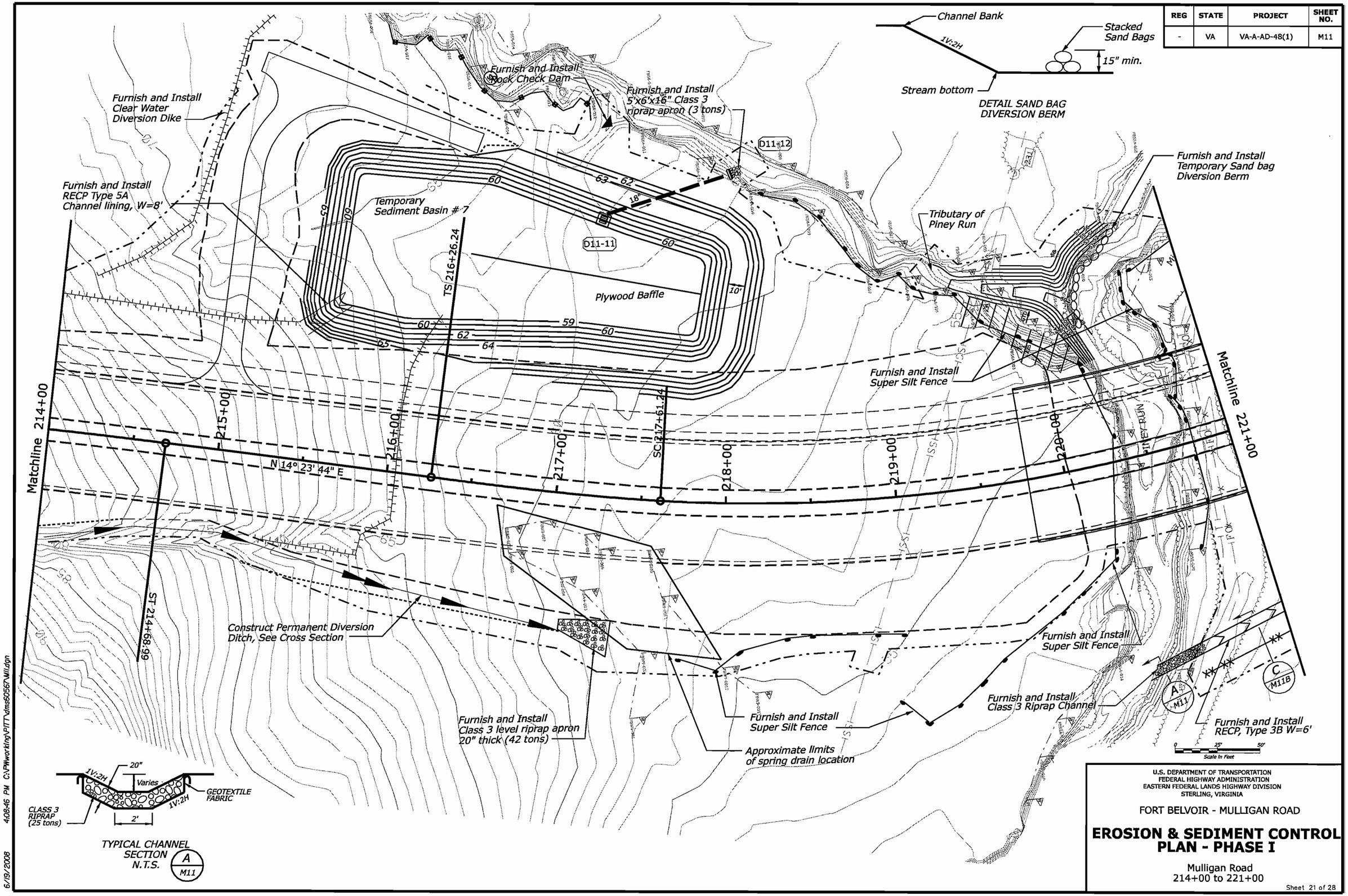

U.S. DEPARTMENT OF TRANSPORTATION
FEDERAL HIGHWAY ADMINISTRATION
EASTERN FEDERAL LANDS HIGHWAY DIVISION
STERLING, VIRGINIA

FORT BELVOIR - MULLIGAN ROAD

EROSION & SEDIMENT CONTROL PLAN - PHASE I

Mulligan Road
214+00 to 221+00

Sheet 21 of 28

6/19/2008 4:08:46 PM C:\PWworking\PITT\dms50567\M11.dgn

REG	STATE	PROJECT	SHEET NO.
-	VA	VA-A-AD-48(1)	M11B

NOTE: Sediment laden water from dewatering operations are to be filtered using an approved filtering device prior to release into Piney Run

Install 5'x6'x16" Class 3 riprap apron (3 tons)

Retain as Sediment Basin until all upstream areas are stable

Tributary of Piney Run

Excavate Channel Bank at a 2:1 Grade See Section B

Retail Sandbag Berm until graded bank is stable

Transition into Bridge Abutment Riprap

Fill in Existing Stream

Bottom of Fill

Limit of Riprap

Tie to Existing Grade

SWM Basin No. 7 extended detention enhanced

Bench 60

Micro pool 58

58.5 Low Marsh

High Marsh

TS 216+26.24

12 LF Gabion 2'x3' Forebay

110 LF 3'x3'

Furnish and Install Std. Combination Drain (Std. VDOT CD-2)

Furnish and Install Std. Combination Drain (Std. VDOT CD-1)

Install 15'x12'x20" Class 3 riprap apron (23 tons)

Install 13'x13'x20" Class 3 riprap apron (21 tons)

Furnish and Install Sandbag Berm

Tie to Existing Grade

Matchline 214+00

Matchline 221+00

Furnish and Install Std. Underdrain System (Std. VDOT UD-4), Typ.

Furnish and Install Std. Underdrain System (Std. VDOT UD-2), Typ.

ST 214+68.99

See Cross Sections

Tie into permanent ditch

Divert runoff into channel after all upstream areas are stabilized

Furnish and Install Std. Combination Drain (Std. VDOT CD-2)

Furnish and install super silt fence

Furnish and install RECP Type 3B, W=6'

Install Class 3 level riprap apron 20" thick (42 tons)

Furnish and install RECP Type 5A, W=6'

PINEY RUN

RECP Type 3B channel lining W=6', see Cross Sections

1V:2H 12" min. 1V:2H 2'

TYPICAL CHANNEL SECTION N.T.S. C M11B

RECP Type 5A channel lining W=6', see Cross Sections

1V:2H 12" min. 1V:2H 2'

TYPICAL CHANNEL SECTION N.T.S. D M11B

Install 6" Aggregate Base Grading AASHTO M-40, #3 Swale across Mulligan Road

12" Max. 1V:5H 1V:5H

TYPICAL CHANNEL SECTION N.T.S. E M11B

10' RECP Type 5A channel lining W=10', see Cross Sections 1V:5H 1V:5H

TYPICAL CHANNEL SECTION N.T.S. F M11B

Scale in Feet 0 25' 50'

U.S. DEPARTMENT OF TRANSPORTATION
FEDERAL HIGHWAY ADMINISTRATION
EASTERN FEDERAL LANDS HIGHWAY DIVISION
STERLING, VIRGINIA

FORT BELVOIR - MULLIGAN ROAD

EROSION & SEDIMENT CONTROL PLAN - PHASE II

Mulligan Road
214+00 to 221+00

Sheet 22 of 28

6/19/2008 5:52:40 PM C:\PWworking\PITT\dms50567\M11b.dgn

REG	STATE	PROJECT	SHEET NO.
-	VA	VA-A-AD-48(1)	M12

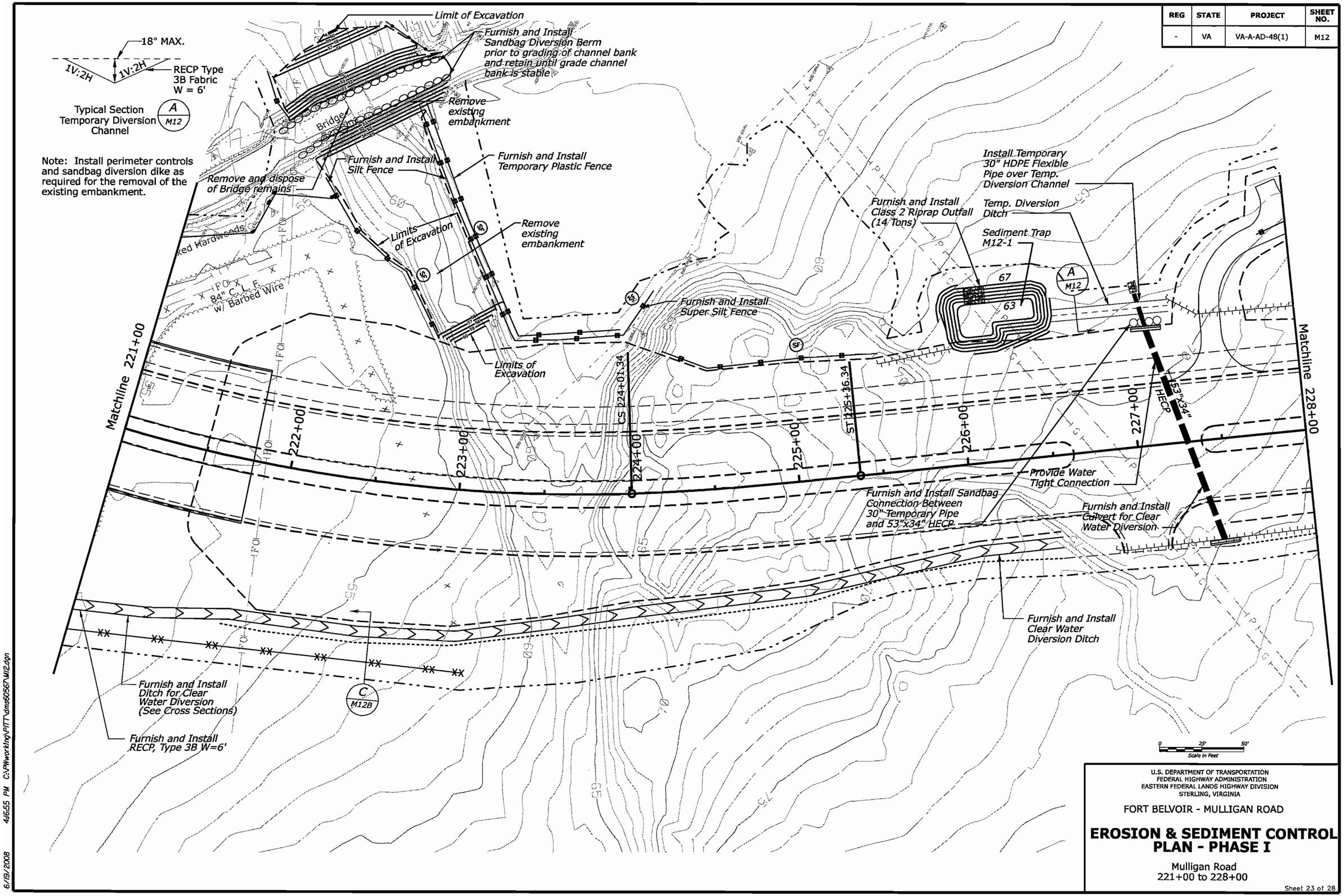

U.S. DEPARTMENT OF TRANSPORTATION
FEDERAL HIGHWAY ADMINISTRATION
EASTERN FEDERAL LANDS HIGHWAY DIVISION
STERLING, VIRGINIA

FORT BELVOIR - MULLIGAN ROAD

EROSION & SEDIMENT CONTROL PLAN - PHASE I

Mulligan Road
221+00 to 228+00

Sheet 23 of 28

6/19/2008 4:6:55 PM C:\PWworking\PITT\dms60567\M12.dgn

REG	STATE	PROJECT	SHEET NO.
-	VA	VA-A-AD-48(1)	M12B

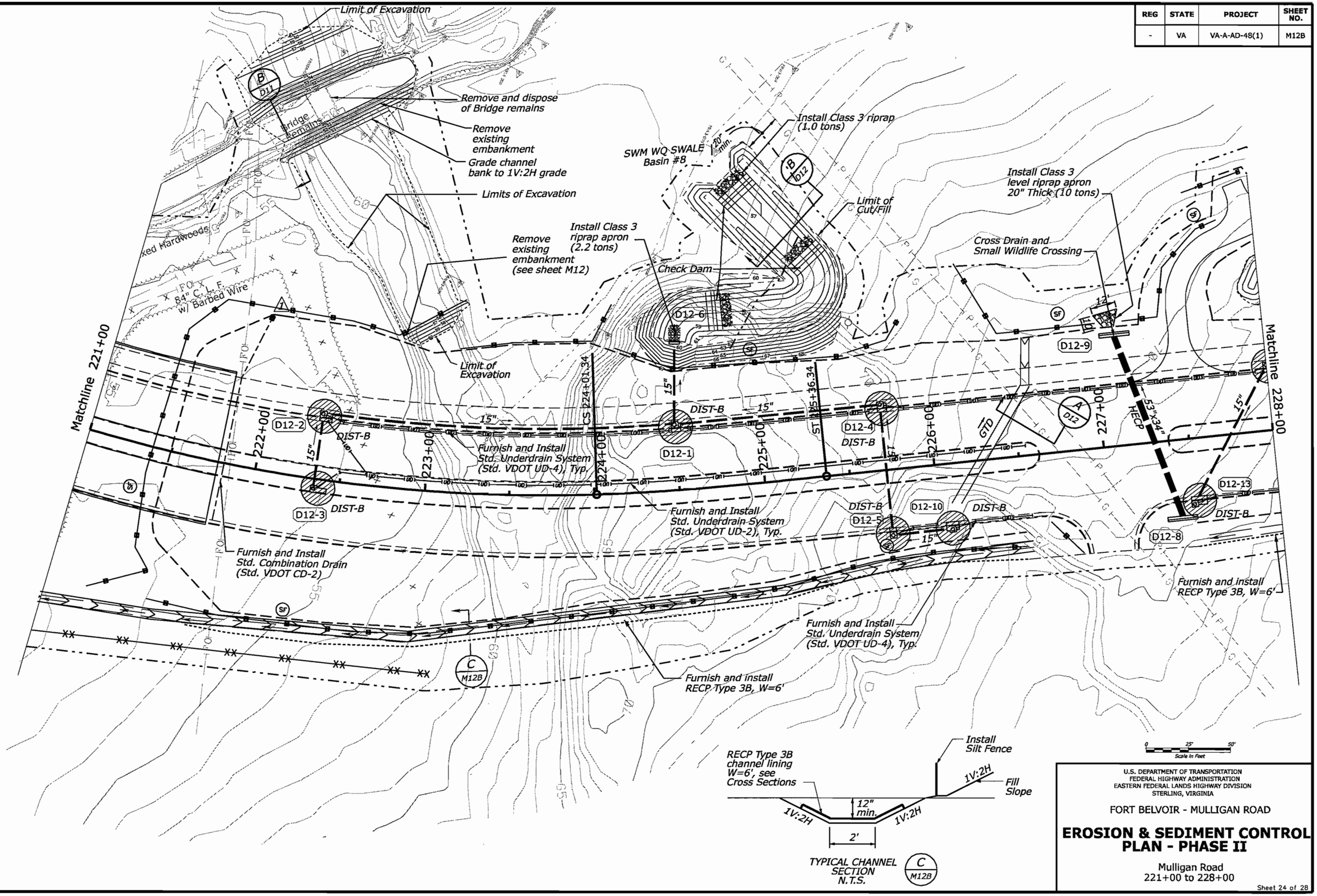

U.S. DEPARTMENT OF TRANSPORTATION
FEDERAL HIGHWAY ADMINISTRATION
EASTERN FEDERAL LANDS HIGHWAY DIVISION
STERLING, VIRGINIA

FORT BELVOIR - MULLIGAN ROAD

EROSION & SEDIMENT CONTROL PLAN - PHASE II

Mulligan Road
221+00 to 228+00

6/19/2008 6:22:32 PM C:\PWworking\PITT\dms60567\M12b.dgn

REG	STATE	PROJECT	SHEET NO.
-	VA	VA-A-AD-48(1)	M13

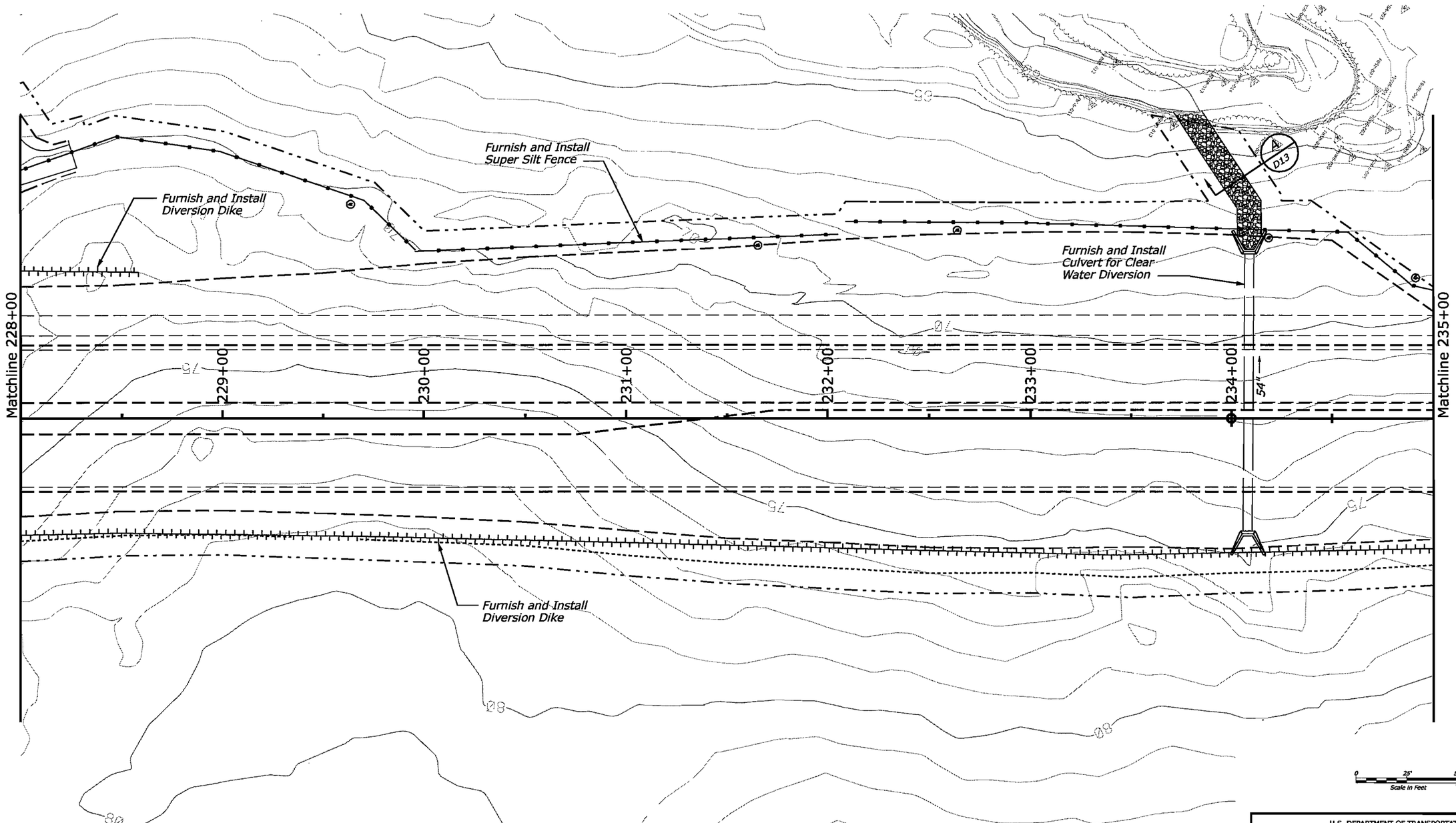

U.S. DEPARTMENT OF TRANSPORTATION
FEDERAL HIGHWAY ADMINISTRATION
EASTERN FEDERAL LANDS HIGHWAY DIVISION
STERLING, VIRGINIA

FORT BELVOIR - MULLIGAN ROAD

EROSION & SEDIMENT CONTROL PLAN - PHASE I

Mulligan Road
228+00 to 235+00

6/18/2008 2:17:20 PM C:\PWworking\PITT\dms60567\M13.dgn

REG	STATE	PROJECT	SHEET NO.
-	VA	VA-A-AD-48(1)	M13B

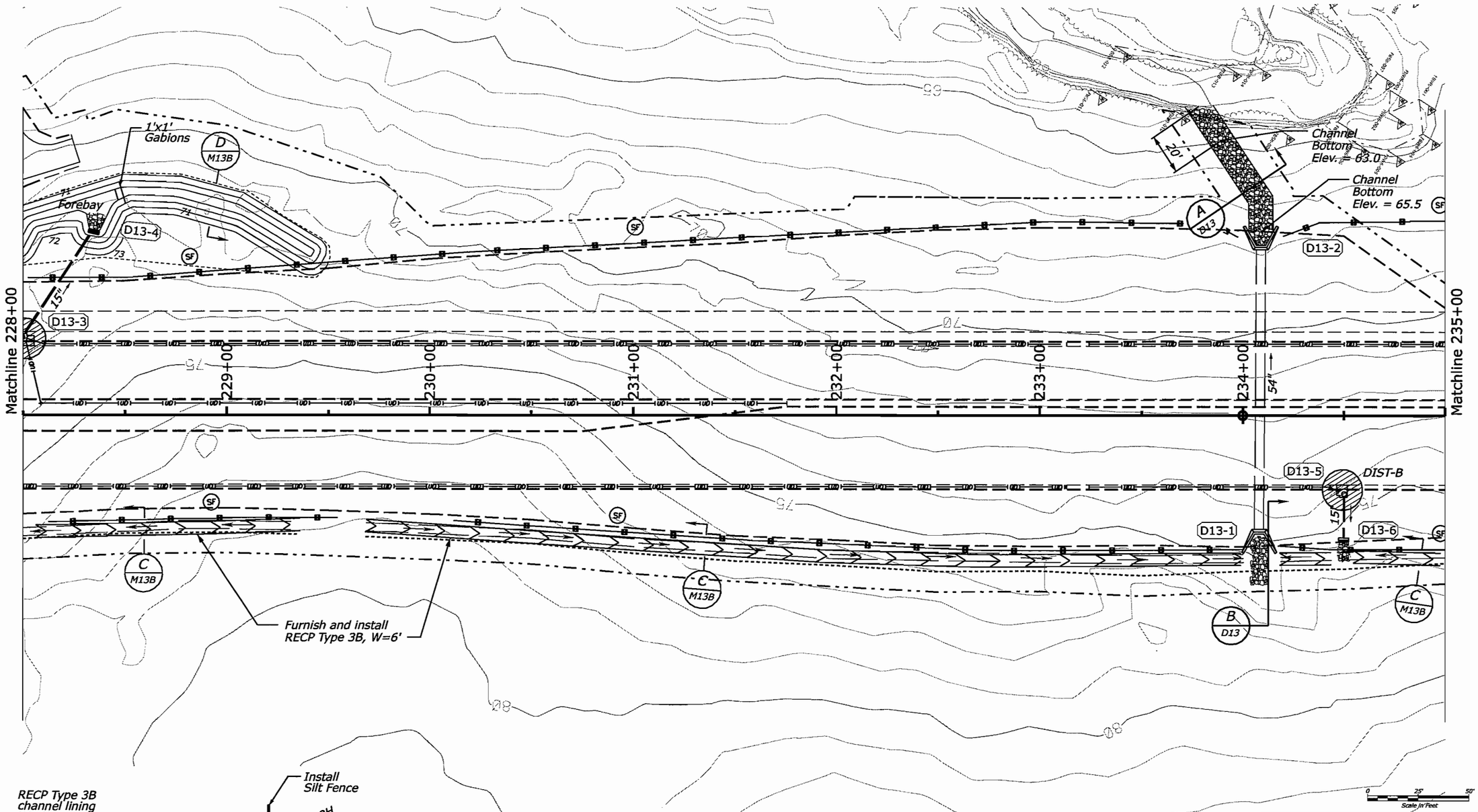

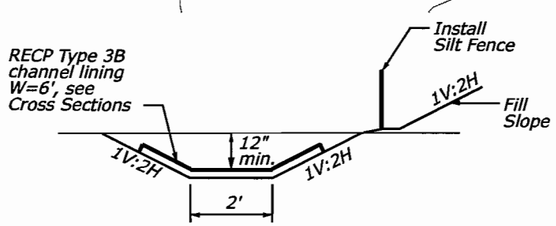

TYPICAL CHANNEL SECTION N.T.S. (C / M13B)

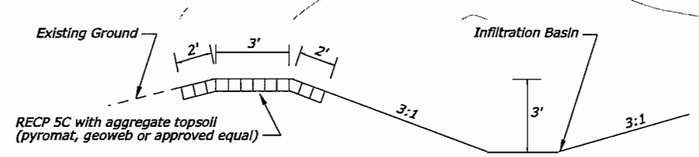

Typical Detail
Infiltration Basin with Level Spreader (D / M13B)

U.S. DEPARTMENT OF TRANSPORTATION
FEDERAL HIGHWAY ADMINISTRATION
EASTERN FEDERAL LANDS HIGHWAY DIVISION
STERLING, VIRGINIA

FORT BELVOIR - MULLIGAN ROAD

EROSION & SEDIMENT CONTROL PLAN - PHASE II

Mulligan Road
228+00 to 235+00

6/19/2008 5:58:31 PM C:\PWworking\PITT\dms60567\M13b.dgn

REG	STATE	PROJECT	SHEET NO.
-	VA	VA-A-AD-48(1)	M14

U.S. DEPARTMENT OF TRANSPORTATION
FEDERAL HIGHWAY ADMINISTRATION
EASTERN FEDERAL LANDS HIGHWAY DIVISION
STERLING, VIRGINIA

FORT BELVOIR - MULLIGAN ROAD

EROSION & SEDIMENT CONTROL PLAN - PHASE I

Mulligan Road
235+00 to 239+78

6/19/2008 7:24:49 PM C:\PWworking\PITT\dms50567\M14.dgn

REG	STATE	PROJECT	SHEET NO.
-	VA	VA-A-AD-48(1)	M14B

U.S. DEPARTMENT OF TRANSPORTATION
FEDERAL HIGHWAY ADMINISTRATION
EASTERN FEDERAL LANDS HIGHWAY DIVISION
STERLING, VIRGINIA

FORT BELVOIR - MULLIGAN ROAD

EROSION & SEDIMENT CONTROL PLAN - PHASE II

Mulligan Road
235+00 to 239+78

6/18/2008 3:48:24 PM C:\PWworking\PITT\dms50567\M14b.dgn

REG	STATE	PROJECT	SHEET NO.
-	VA	VA-A-AD-48(1)	N1

Notes

1. Transition traffic barrier with a slope ratio of 11:1 with end point at least 8' beyond the edge of travelway.
2. Space all signs a minimum of 100'.
3. Use flaggers to construct the construction entrance. Refer to Standard Drawing 635-6 "Temporary Traffic Control Single Lane Closure Layout (With Flaggers) for details.
4. Maintain Pedestrian and Bicycle access at all times.
5. Maintain traversable access at all times at intersection of Construction Entrance and Bicycle Path.
6. Cover "Trucks Entering Highway" sign from driver's view when trucks are not in operation.

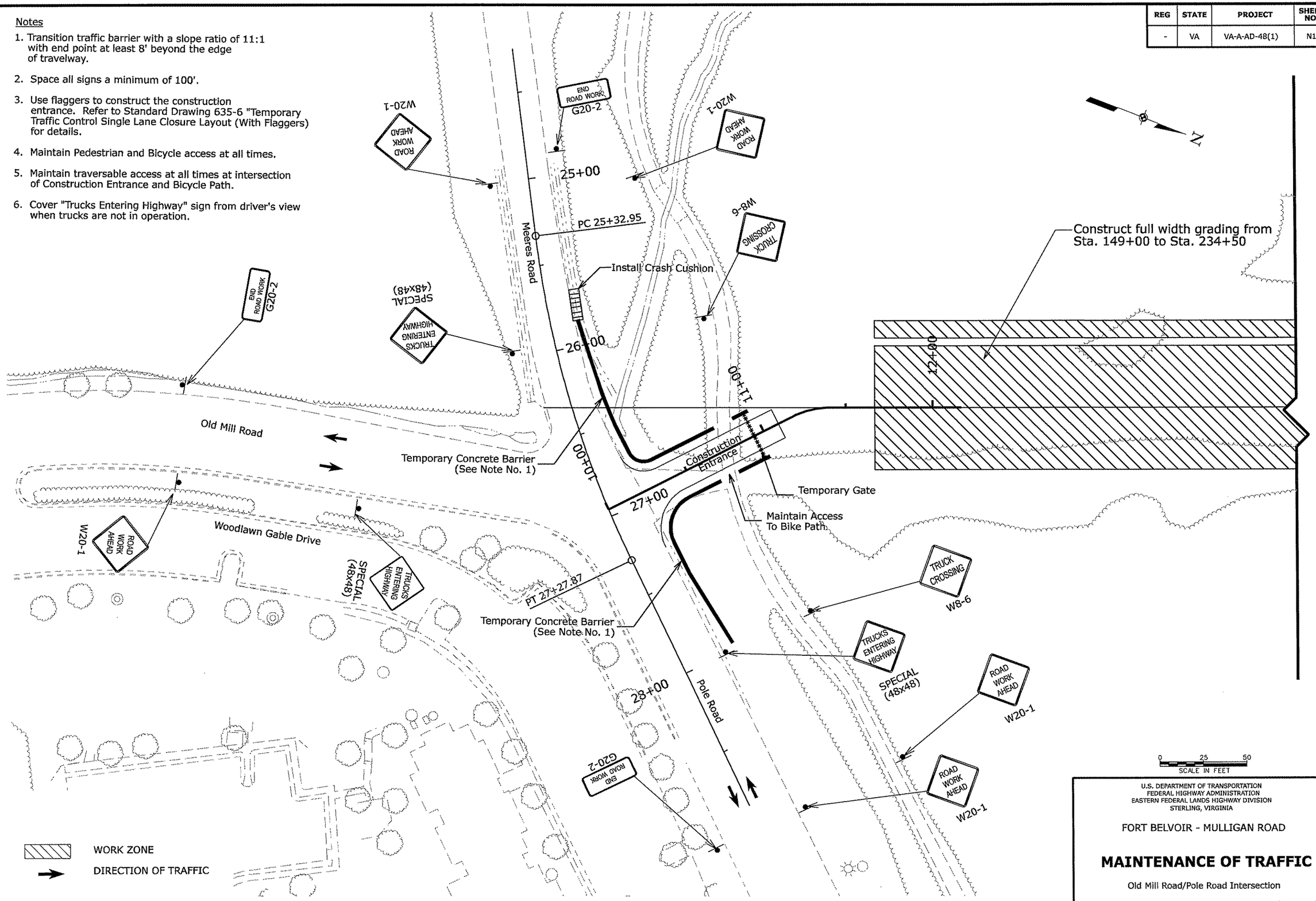

U.S. DEPARTMENT OF TRANSPORTATION
FEDERAL HIGHWAY ADMINISTRATION
EASTERN FEDERAL LANDS HIGHWAY DIVISION
STERLING, VIRGINIA

FORT BELVOIR - MULLIGAN ROAD

MAINTENANCE OF TRAFFIC

Old Mill Road/Pole Road Intersection

Sheet 1 of 3

7/10/2008 10:25:54 AM C:\PWworking\FITT\dms60567\W01A.dgn

REG	STATE	PROJECT	SHEET NO.
-	VA	VA-A-AD-48(1)	N2

Notes

1. Close Kingman Road during the construction duration of the southbound bridge and the northbound abutments of Mulligan Road.

2. Space all signs a minimum of 100'.

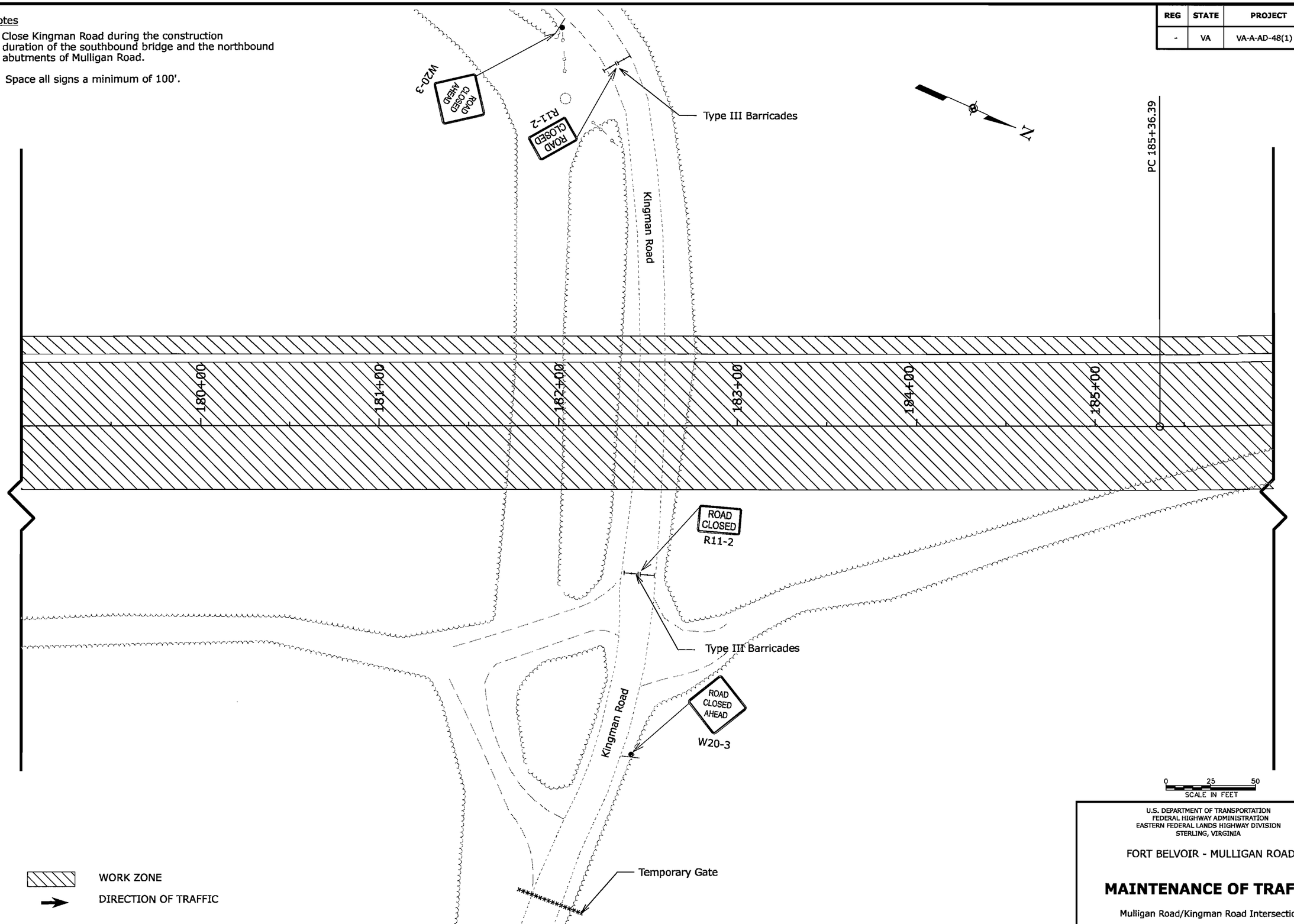

U.S. DEPARTMENT OF TRANSPORTATION
FEDERAL HIGHWAY ADMINISTRATION
EASTERN FEDERAL LANDS HIGHWAY DIVISION
STERLING, VIRGINIA

FORT BELVOIR - MULLIGAN ROAD

MAINTENANCE OF TRAFFIC

Mulligan Road/Kingman Road Intersection

Sheet 2 of 3

6/6/2008 4:46:43 PM C:\PWworking\FITT\dms60567\N02A.dgn

REG	STATE	PROJECT	SHEET NO.
-	VA	VA-A-AD-48(1)	N3

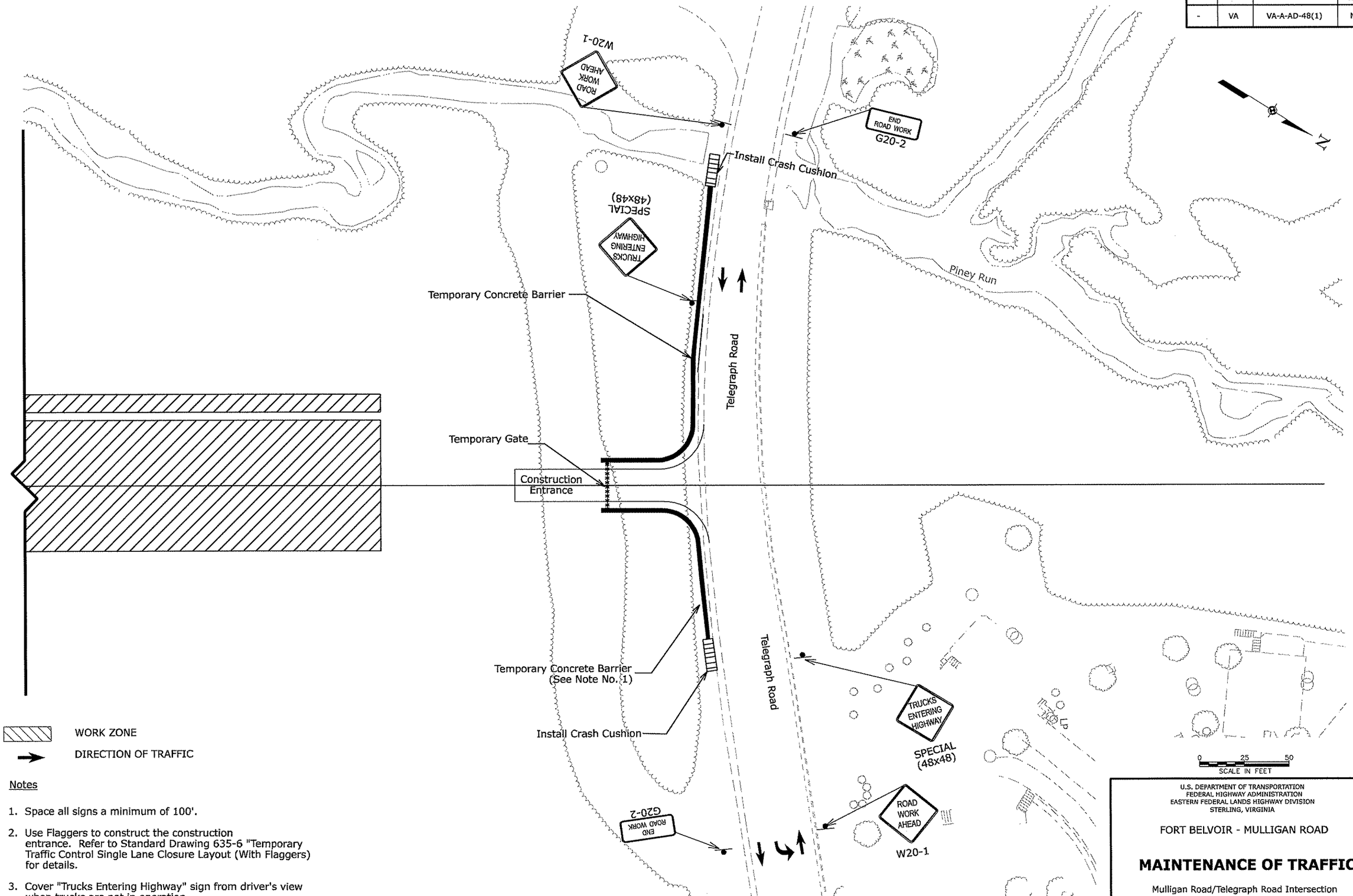

WORK ZONE

DIRECTION OF TRAFFIC

Notes

1. Space all signs a minimum of 100'.
2. Use Flaggers to construct the construction entrance. Refer to Standard Drawing 635-6 "Temporary Traffic Control Single Lane Closure Layout (With Flaggers) for details.
3. Cover "Trucks Entering Highway" sign from driver's view when trucks are not in operation.

U.S. DEPARTMENT OF TRANSPORTATION
FEDERAL HIGHWAY ADMINISTRATION
EASTERN FEDERAL LANDS HIGHWAY DIVISION
STERLING, VIRGINIA

FORT BELVOIR - MULLIGAN ROAD

MAINTENANCE OF TRAFFIC

Mulligan Road/Telegraph Road Intersection

Sheet 3 of 3

7/10/2008 10:5:58 AM C:\PWworking\PITT\dms60567\N03A.dgn

REG	STATE	PROJECT	SHEET NO.
-	VA	VA-A-AD-48(1)	R1

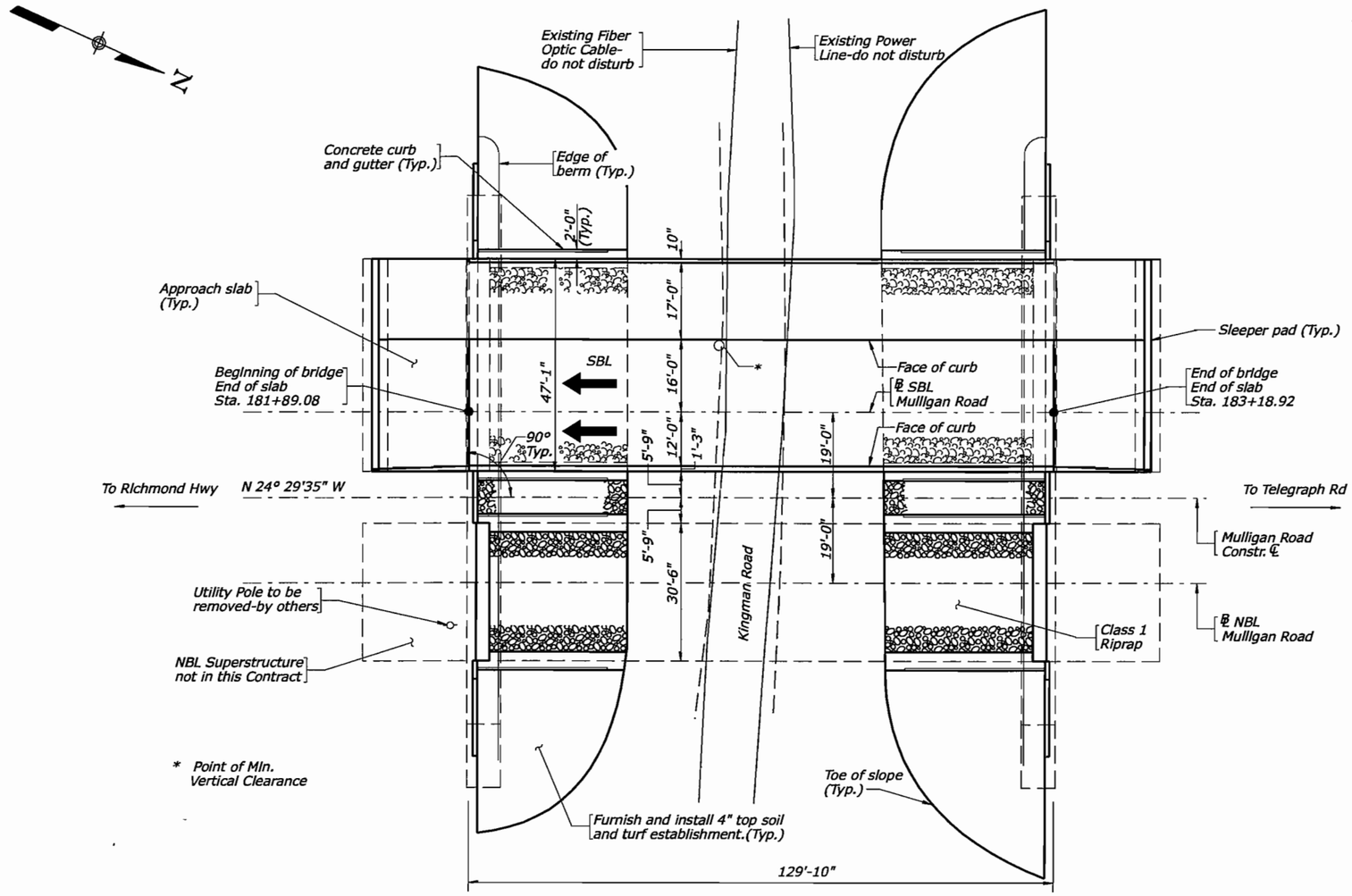

Plan

General Notes:

Width: SBL: 47'-1" out-to-out of rails

Span layout: 129'-10" simple steel plate girder span.

Capacity: HL-93 loading.

Specifications: Construction: Standard Specifications for Construction of Roads and Bridges on Federal Highway Projects, FP-03

Design: AASHTO LRFD Specifications for Highway Bridges, 4th. Edition, 2007 and VDOT Modifications

These plans are incomplete unless accompanied by SCR (Special Contract Requirements) included in the contract documents.

Design loading includes 20 psf allowance for construction tolerances and construction methods.

The use of Prestressed deck panels as stay-in-place forms will not be permitted.

All structural steel, except in bearings and sole plates, shall be ASTM A709 grade 50W and shall be unpainted except as required by FHWA, FP-03 specifications. Finish Paint color shall be brown 595-20059. Structural steel in bearings and sole plates shall be ASTM A709 grade 36 and shall be painted.

Concrete in prestressed piles shall be Class P (f'c=5000 psi). Concrete in bridge deck, parapets, terminal walls and sidewalks shall be HPC (f'c = 4000 psi). Concrete in abutments shall be class A(AE) (f'c = 4000 psi). Concrete in approach slabs and sleeper pads shall be class D(AE) (f'c = 4000 psi).

Deformed reinforcing bars shall conform to ASTM A615, Grade 60. All reinforcements in superstructure shall be epoxy coated.

12" Sq. Prestressed piles in Abutments have ultimate axial capacity of 248 tons with a safety factor of 2.25. 12" cast-in-place piles with conical point at the end may be substituted for 12" prestressed concrete piles at no additional cost.

BM: B&N tablet stamped "3000" located on north side of John Kingman Road, 330.55 ft east of Mulligan Road N 6952665.8919, E11871044.5308, El.121.19

Project Data:	
Bridge Name:	Mulligan Road over Kingman Road
Route Name:	Mulligan Road
Project Location:	Fairfax County, Virginia
Owner:	VDOT

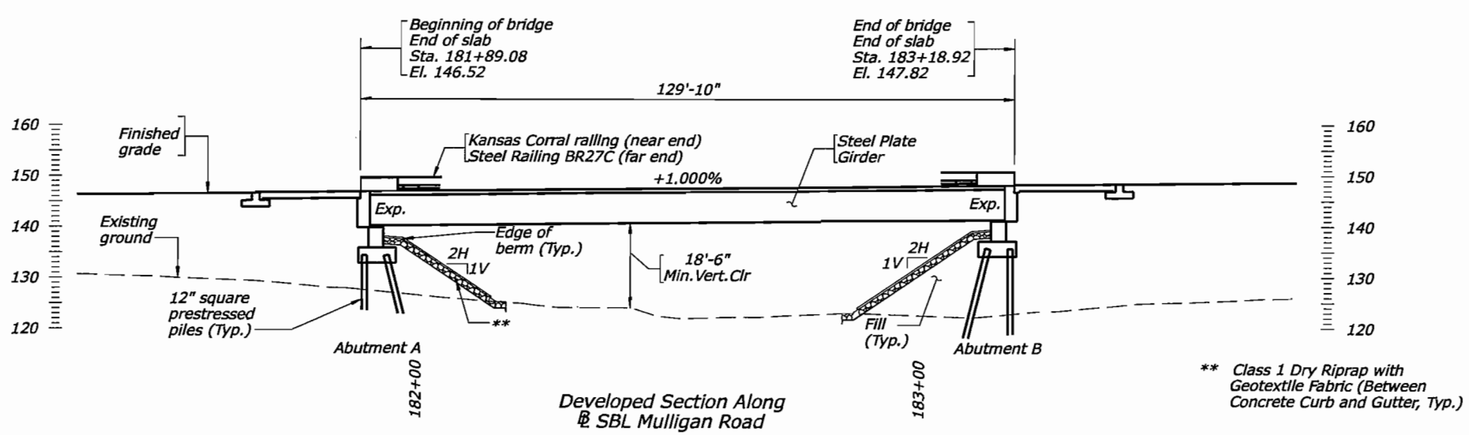

Developed Section Along ℄ SBL Mulligan Road

** Class 1 Dry Riprap with Geotextile Fabric (Between Concrete Curb and Gutter, Typ.)

0 15 30
SCALE IN FEET

U.S. DEPARTMENT OF TRANSPORTATION
FEDERAL HIGHWAY ADMINISTRATION
EASTERN FEDERAL LANDS HIGHWAY DIVISION
STERLING, VIRGINIA

FORT BELVOIR - MULLIGAN ROAD
MULLIGAN ROAD OVER KINGMAN ROAD

PLAN, ELEVATION AND GENERAL NOTES

6/19/2008 11:07:37 PM C:\PWworking\PITT\dms80930\front sheet.dgn

REG	STATE	PROJECT	SHEET NO.
-	VA	VA-A-AD-48(1)	R2

ESTIMATED QUANTITIES - SUBSTRUCTURE ONLY

		Pay Item 20701-1400	Pay Item 20801-0000	Pay Item 20803-0000	Pay Item 25102-1000	Pay Item 55101-0500	Pay Item 55104-1000	Pay Item 55120-0000	Pay Item 55201-0200	Pay Item 55401-1000	Pay Item 60203-0200	Pay Item 60520-0000	Pay Item 60902-0800
		Earthwork Geotextile, Type IV-C	Structure Excavation ⊗	Structural Backfill ⊗	Placed Riprap, Class 1	Precast, Prestressed Concrete Piles 12"x12", In place	Dynamic Pile Load Test	Test Piles	Structural Concrete, Class A(AE)	Reinforcing Steel	6" Slotted Drain Pipe	Granular Backfill ⊗	Curb and Gutter, Concrete, 10" depth
Units		SQYD	CUYD	CUYD	TON	LNFT	Each	LNFT	CUYD	LB	LNFT	CUYD	LNFT
Abutment A	Neat	359	——	——	——	——	——	——	55.0	5760	——	——	147
	Footing	——	141	492	304	2416	1	71	97.0	8270	150	36	——
Abutment B	Neat	389	——	——	——	——	——	——	55.0	5760	——	——	159
	Footing	——	141	479	330	2416	1	71	97.0	8270	150	36	——
Total		748	282	971	634	4832	2	142	304.0	28,060	300	72	306

⊗ Denotes items to be paid for on the basis of plan quantities in accordance with FP-03 and current SCR.

ESTIMATED QUANTITIES - SUPERSTRUCTURE ONLY

	Pay Item 55201-0200	Pay Item 55201-1100	Pay Item 55401-2000	Pay Item 55401-2500	Pay Item 55502-0000	Pay Item 55601-0500	Pay Item 55601-1200	Pay Item 56401-1000
	Structural Concrete, Class A(AE)	Structural Concrete Class HPC	Reinforcing Steel, Epoxy Coated	Reinforcing Steel, Galvanized	Structural Steel, furnished, fabricated and erected	Bridge Railing, Concrete ⊗	Bridge Railing, Steel, Three Rail ⊗	Bearing Device, Elastomeric
Units	CUYD	CUYD	LB	LB	LB	LNFT	LNFT	EACH
Quantity	58.0	241.0	58,370	3100	197,200	130	130	10

⊗ Denotes items to be paid for on the basis of plan quantities in accordance with FP-03 and current SCR.

Approach Slab Quantities *

	Pay Item 55202-1000 ⊗	Pay Item 55401-1000 ⊗
	Structural Concrete, Class D (AE) for Approach Slabs, Type 1	Reinforcing Steel
Units	SQYD	LB
Quantity	225	18,600

⊗ Denotes items to be paid for on the basis of plan quantities in accordance with FP-03 and current SCR.

* Include quantities in approach slab and sleeper pad.

INDEX OF SHEETS

Sheet No.	Description
R1	Plan, Elevation and General Notes
R2	Estimated Quantities and Index Of Sheets
R3	Substructure Layout and Slope Protection
R4	Abutment Footing Plan (Sheet 1 of 2)
R5	Abutment Footing Plan (Sheet 2 of 2)
R6	Abutment Plan and Elevation (Sheet 1 of 2)
R7	Abutment Plan and Elevation (Sheet 2 of 2)
R8	Semi-Integral Backwall - Plan and Elevation
R9	Semi-Integral Backwall - Sections
R10	Abutment Miscellaneous Details
R11	Bearing Details
R12	Typical Section - SBL and NBL
R13	Transverse Section - SBL
R14	Framing Plan - SBL
R15	Girder Elevation - SBL, Cross Frames
R16	Dead Load Deflections and Slab Elevations - SBL
R17	Deck Plan - SBL
R18	Deck Slab Elevations - SBL
R19	Steel Railing BR27C (Sheet 1 of 2)
R20	Steel Railing BR27C (Sheet 2 of 2)
R21	Cast-in-place Concrete Railing (32" Kansas Corral)
R22	Prestressed Concrete Piles, Square: 10" thru 24"
R23	Reinforcing Steel Schedule (Sheet 1 of 2)
R24	Reinforcing Steel Schedule (Sheet 2 of 2)
R25	Engineering Geology
R26	Engineering Geology
R27	Engineering Geology
R28	Engineering Geology
R29	Approach Slabs - SBL

Rev. No.	Sheets Revised	Date

TABLE OF REVISIONS

U.S. DEPARTMENT OF TRANSPORTATION
FEDERAL HIGHWAY ADMINISTRATION
EASTERN FEDERAL LANDS HIGHWAY DIVISION
STERLING, VIRGINIA

FORT BELVOIR - MULLIGAN ROAD
MULLIGAN ROAD OVER KINGMAN ROAD

ESTIMATED QUANTITIES AND INDEX OF SHEETS

6/19/2008 11:55:42 AM C:\PwWorking\PITT\dms80930\quantity.dgn

REG	STATE	PROJECT	SHEET NO.
-	VA	VA-A-AD-48(1)	R3

Notes:
1. This Layout is to be used only for the purpose of locating fill slopes and footings of abutments. For details of stem,backwall and wingwalls, see Abutment Details - Sheets R4 through R10.

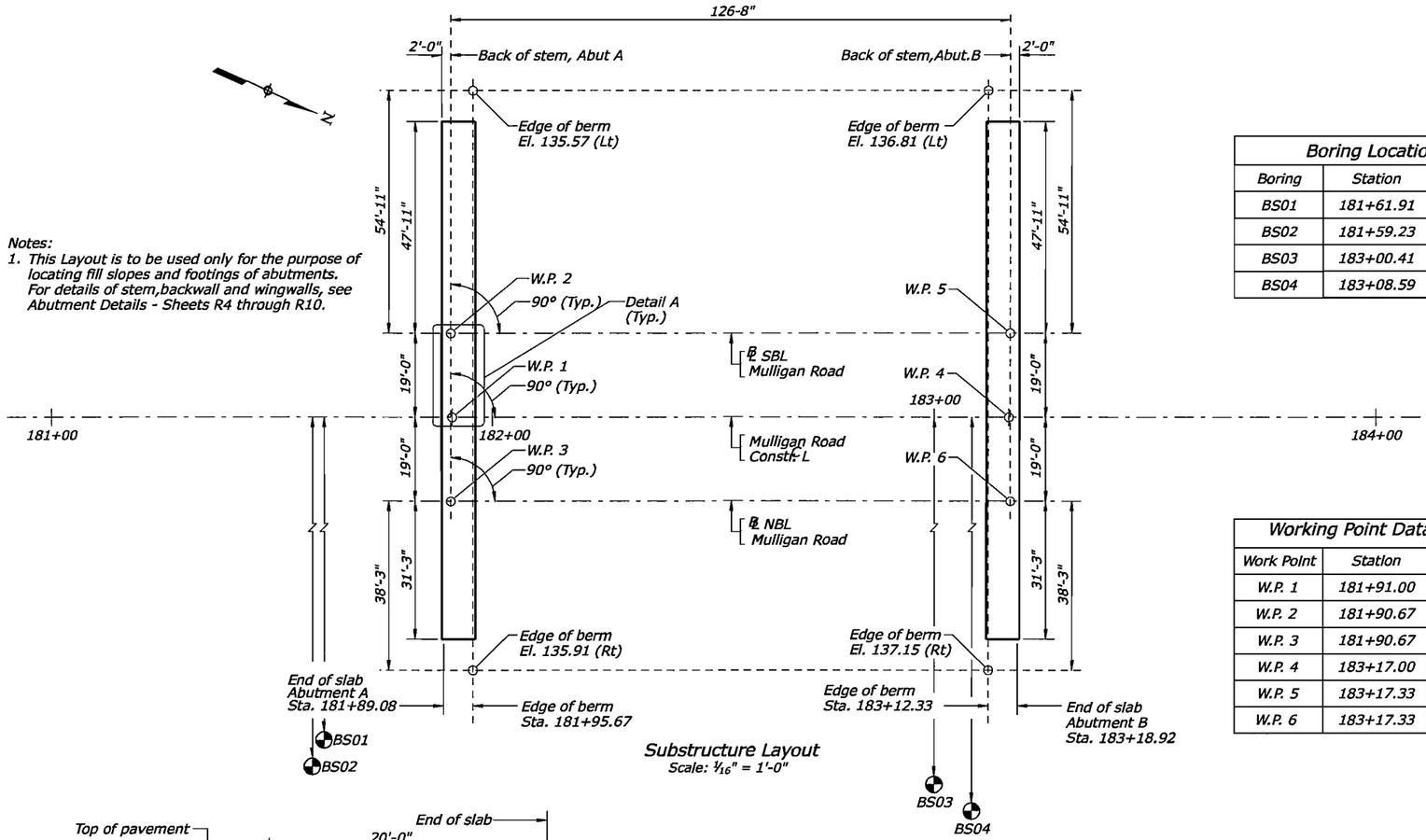

Substructure Layout
Scale: 1/16" = 1'-0"

Boring Locations		
Boring	Station	Offset
BS01	181+61.91	99.72(Rt)
BS02	181+59.23	139.63(Rt)
BS03	183+00.41	104.17(Rt)
BS04	183+08.59	141.13(Rt)

Working Point Data Table		
Work Point	Station	Offset
W.P. 1	181+91.00	0.00
W.P. 2	181+90.67	19.00(Lt)
W.P. 3	181+90.67	19.00(Rt)
W.P. 4	183+17.00	0.00
W.P. 5	183+17.33	19.00(Lt)
W.P. 6	183+17.33	19.00(Rt)

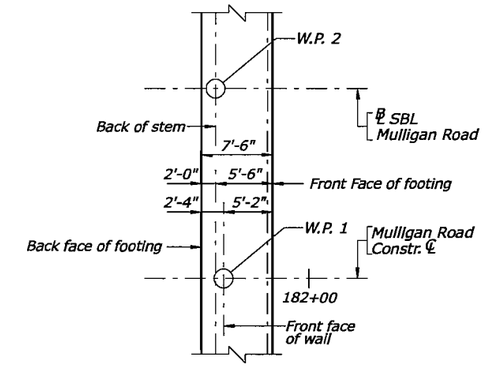

Detail A
Scale: 1/8" = 1'-0"

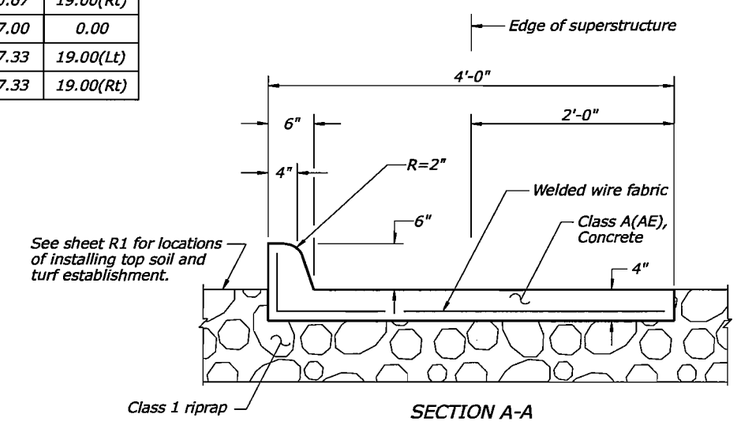

SECTION A-A
N.T.S.

Cost for concrete curb shall be included in the price bid for Dry RipRap Class 1

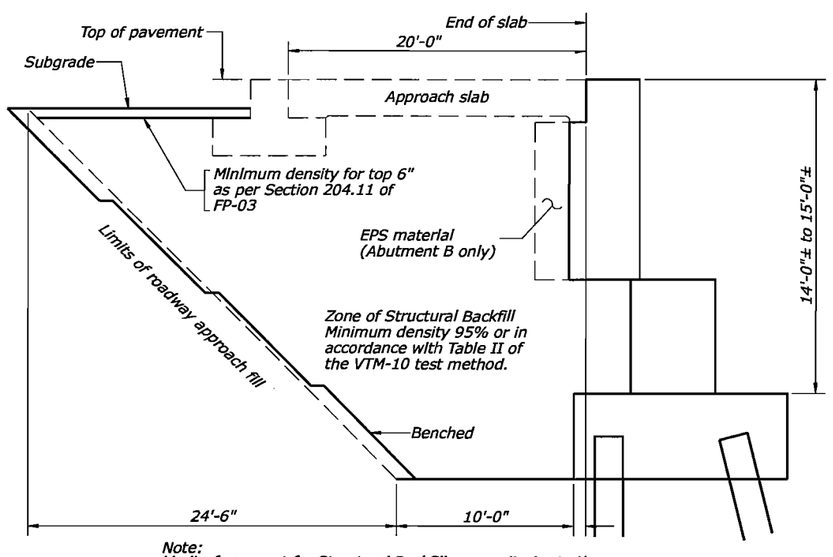

Note:
Limit of payment for Structural Backfill perpendicular to the centerline is the same as the width of the superstructure.

SECTION THROUGH ABUTMENT (for Phase I only)
Abutment drainage not shown
Not to scale

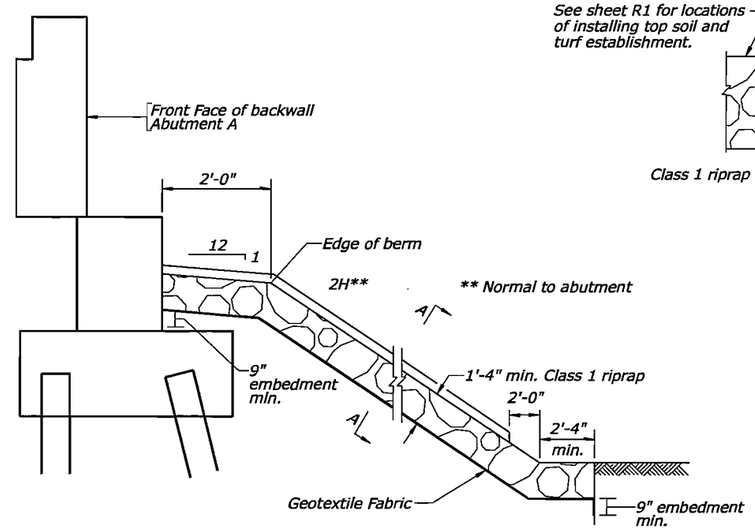

SLOPE PROTECTION
N.T.S.
(Abut. A shown,
Abut. B opp. hand)

U.S. DEPARTMENT OF TRANSPORTATION
FEDERAL HIGHWAY ADMINISTRATION
EASTERN FEDERAL LANDS HIGHWAY DIVISION
STERLING, VIRGINIA

FORT BELVOIR - MULLIGAN ROAD
MULLIGAN ROAD OVER KINGMAN ROAD

SUBSTRUCTURE LAYOUT AND SLOPE PROTECTION

6/19/2008 1:00:03 PM C:\P-WWorking\PITT\dms80930\substruct.dgn

REG	STATE	PROJECT	SHEET NO.
-	VA	VA-A-AD-48(1)	R4

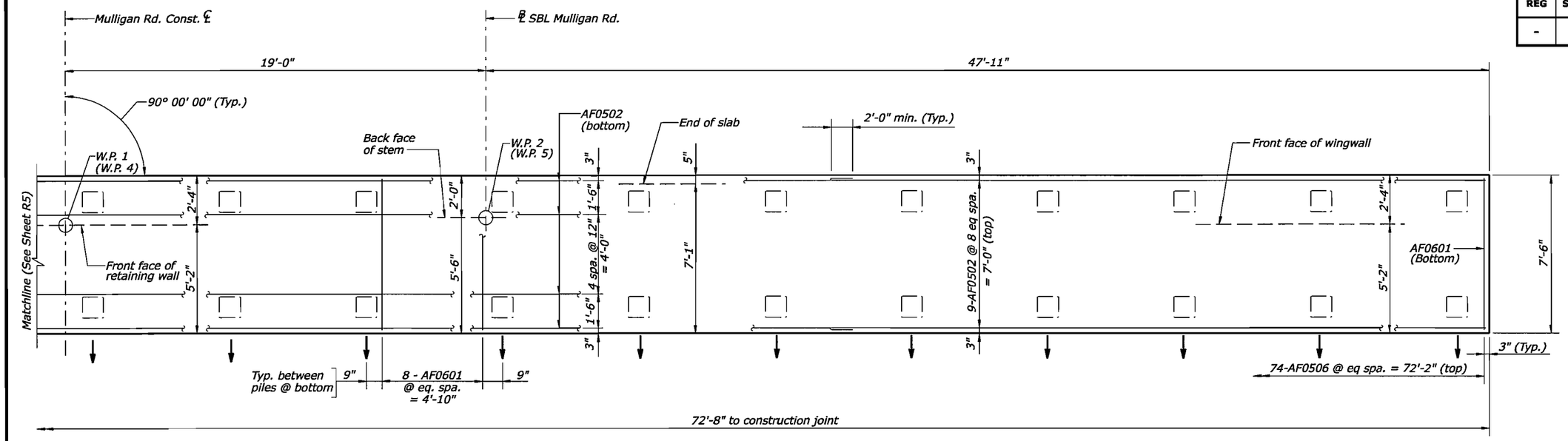

Footing Plan - SBL
Scale: 3/8" = 1'-0"
Abutment A footing shown (Abutment B similar-opposite hand)

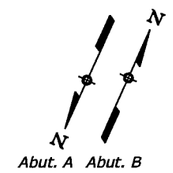

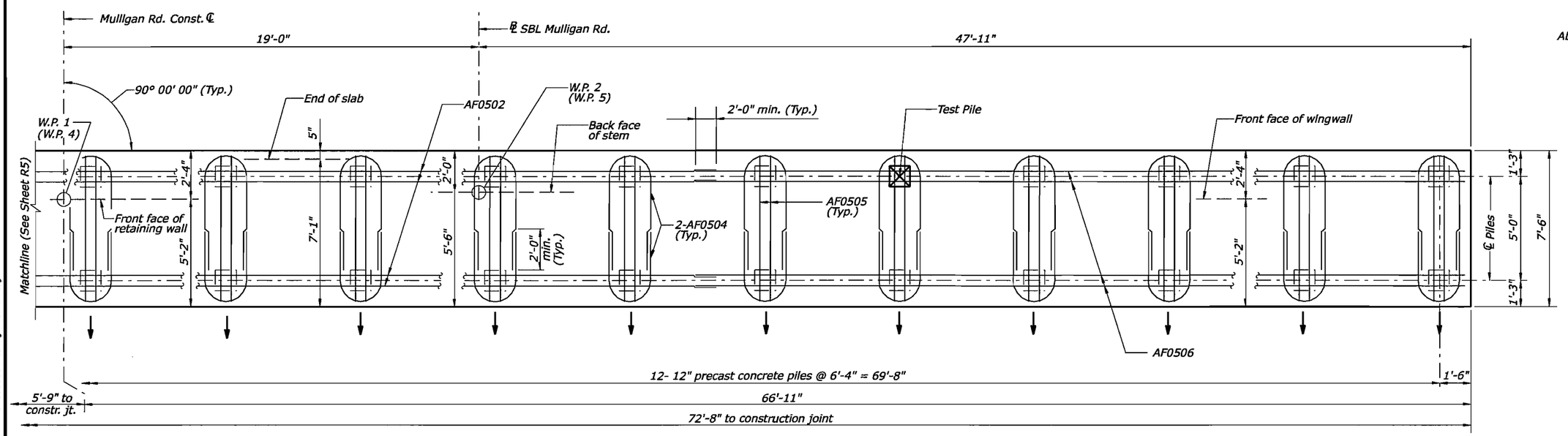

Footing Pile Layout - SBL
Scale: 3/8" = 1'-0"
Abutment A footing shown (Abutment B similar-opposite hand)

Notes:
1. *For Abutment Plan and Elevation, see Sheets R6 and R7 .*
2. *For substructure layout and working point data see sheet R3.*
3. *For reinforcing schedules, see sheets R23 and R24.*
4. *Estimated tip elevations for the piles are as follows:*
   Abutment A = 71.85 ±
   Abutment B = 73.09 ±
5. *Data shown in parenthesis ( ) are for Abutment B.*

Legend:

↓ *Denotes direction of 4:1 batter pile*

⊠ *Denotes test pile and pile to be used for dynamic pile test.*

U.S. DEPARTMENT OF TRANSPORTATION
FEDERAL HIGHWAY ADMINISTRATION
EASTERN FEDERAL LANDS HIGHWAY DIVISION
STERLING, VIRGINIA

FORT BELVOIR - MULLIGAN ROAD
MULLIGAN ROAD OVER KINGMAN ROAD

ABUTMENT FOOTING PLAN

Sheet 1 of 2

6/18/2008 3:05:06 PM C:\PwWorking\PITT\dms80930\Footing Plan sht.dgn

REG	STATE	PROJECT	SHEET NO.
-	VA	VA-A-AD-48(1)	R5

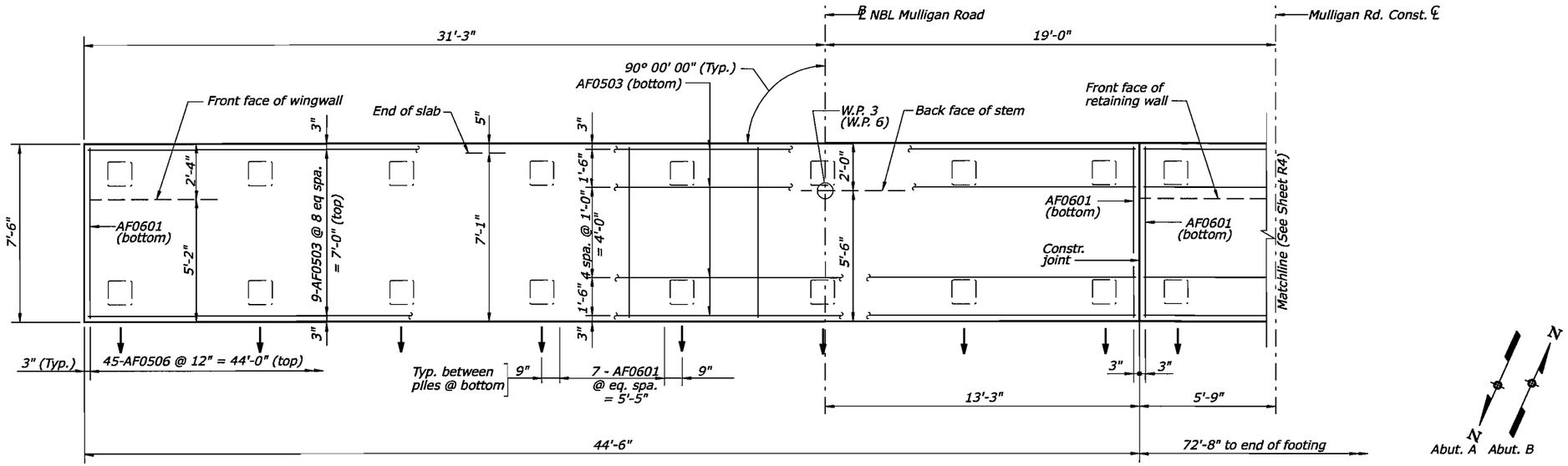

Footing Plan - NBL

Scale: 3/8" = 1'-0"

Abutment A footing shown (Abutment B similar-opposite hand)

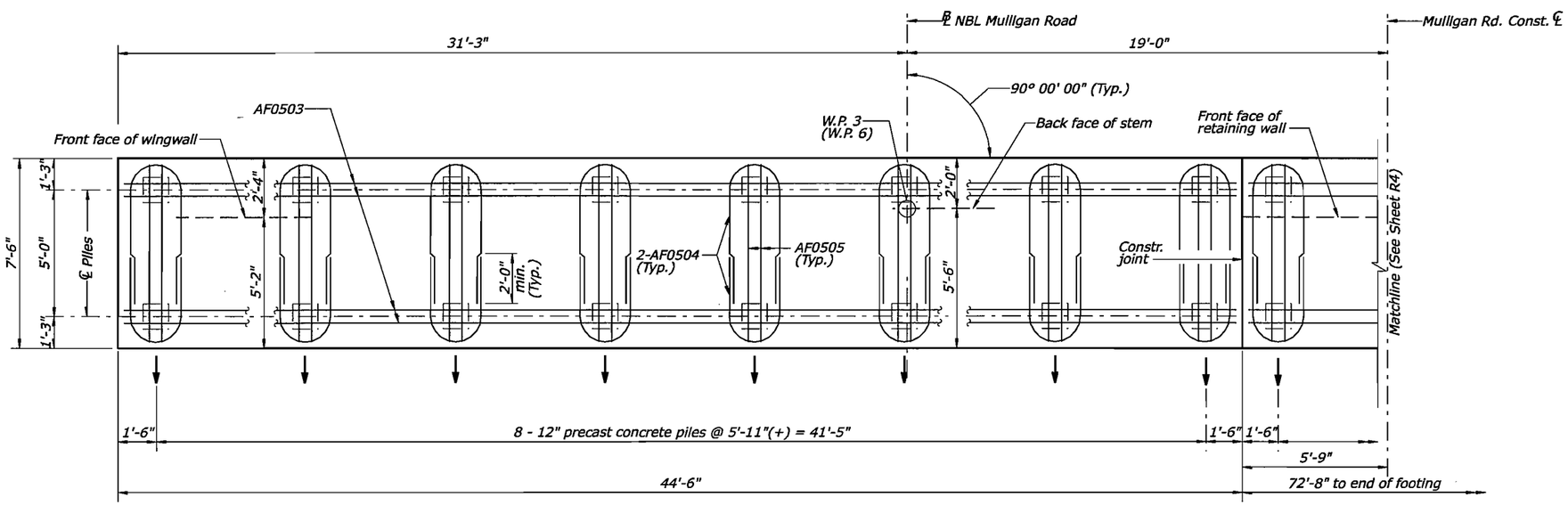

Footing Pile Layout - NBL

Scale: 3/8" = 1'-0"

Abutment A footing shown (Abutment B similar-opposite hand)

Notes:

1. *For Abutment Plan and Elevation, see Sheets R6 and R7 .*
2. *For substructure layout and working point data, see sheet R3.*
3. *For reinforcing schedule, see sheets R23 and R24.*
4. *Estimated tip elevations for the piles are as follows:*
   Abutment A = 71.85 ±
   Abutment B = 73.09 ±
5. *Data shown in parenthesis ( ) are for Abutment B.*

Legend:

Denotes direction of 4:1 batter pile

U.S. DEPARTMENT OF TRANSPORTATION
FEDERAL HIGHWAY ADMINISTRATION
EASTERN FEDERAL LANDS HIGHWAY DIVISION
STERLING, VIRGINIA

FORT BELVOIR - MULLIGAN ROAD
MULLIGAN ROAD OVER KINGMAN ROAD

ABUTMENT FOOTING PLAN

Sheet 2 of 2

6/18/2008 3:05:31 PM C:\PwWorking\PITT\dms80930\Footing Plan sht2.dgn

REG	STATE	PROJECT	SHEET NO.
-	VA	VA-A-AD-48(1)	R6

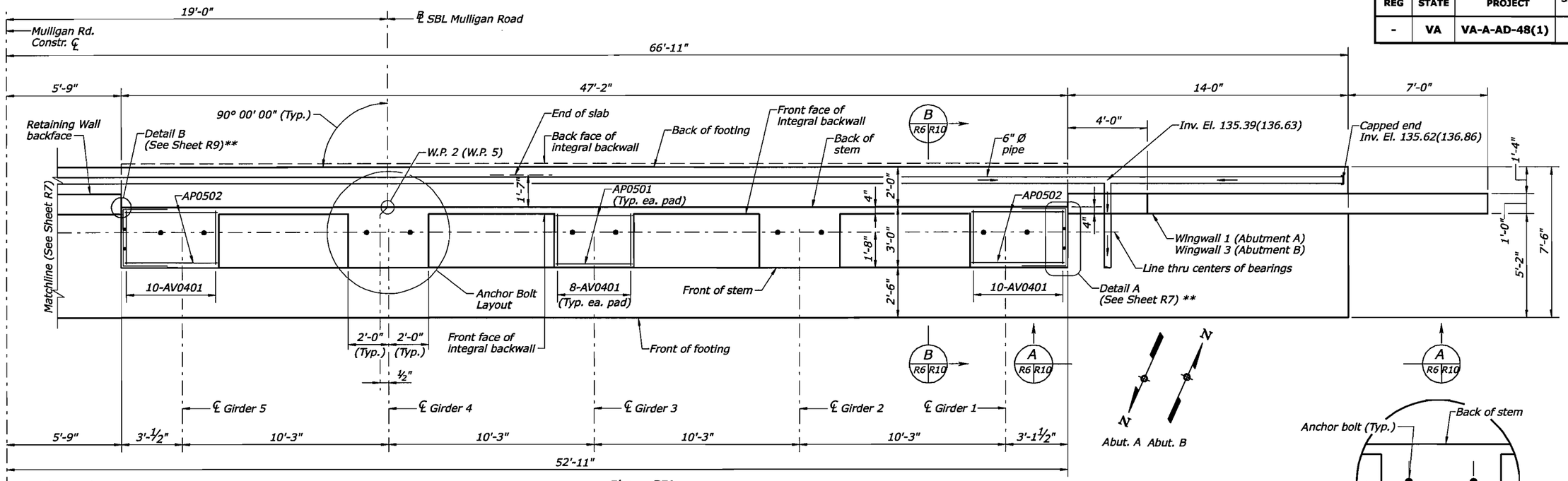

Plan - SBL
Scale: ⅜" = 1'-0"
Abutment A shown (Abutment B similar - opposite hand)
(Reinforcement in footing not shown for clarity)

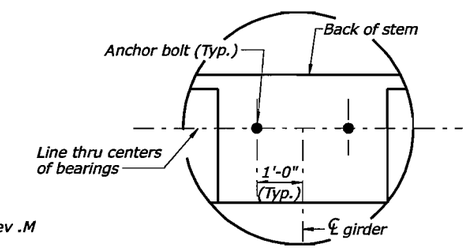

Typical Anchor Bolt Layout
Not To Scale

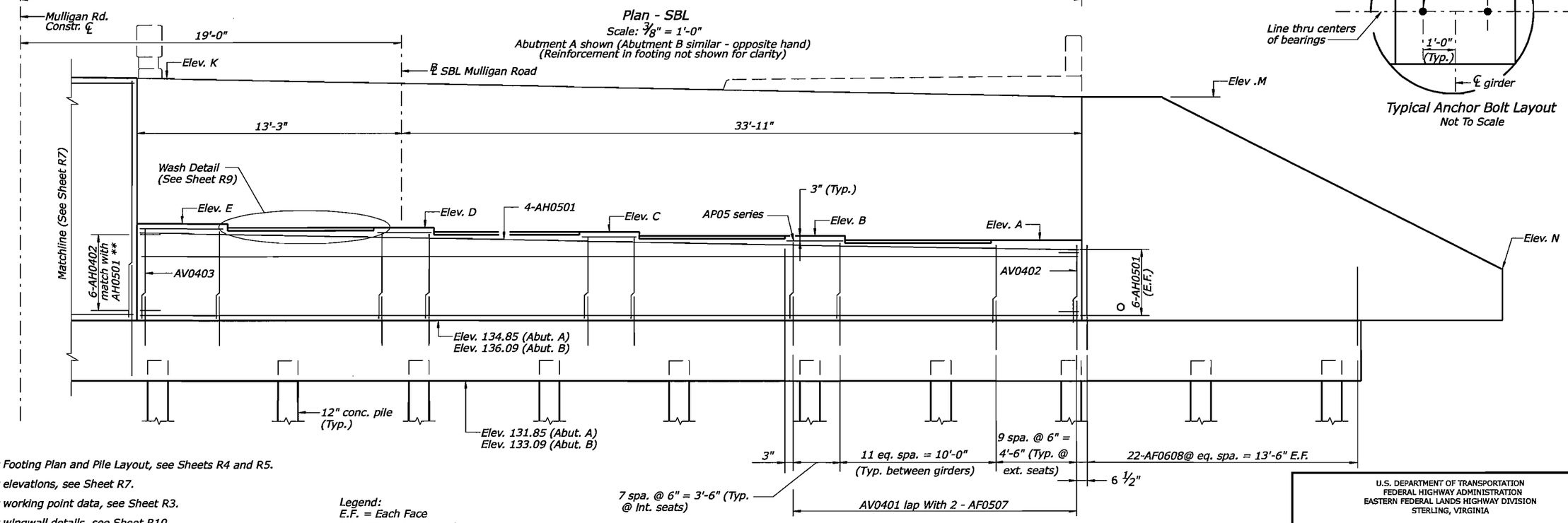

Legend:
E.F. = Each Face
** = Typical each end

Elevation - SBL
Scale: ⅜" = 1'-0"
Abutment A shown (Abutment B similar - opposite hand)
(Reinforcement in footing not shown for clarity)

Notes:

1. For Footing Plan and Pile Layout, see Sheets R4 and R5.
2. For elevations, see Sheet R7.
3. For working point data, see Sheet R3.
4. For wingwall details, see Sheet R10.
5. For reinforcing schedule, see Sheets R23 and R24.
6. For approach slabs, see Detail E552-A.
7. Data shown in parenthesis ( ) are for Abutment B.
8. For anchor bolt details, see Detail E564-A.
9. Contractor shall extend 6" Ø pipe underdrain to daylight.

U.S. DEPARTMENT OF TRANSPORTATION
FEDERAL HIGHWAY ADMINISTRATION
EASTERN FEDERAL LANDS HIGHWAY DIVISION
STERLING, VIRGINIA

FORT BELVOIR - MULLIGAN ROAD
MULLIGAN ROAD OVER KINGMAN ROAD

ABUTMENT PLAN AND ELEVATION

Sheet 1 of 2

6/18/2008 2:55:59 PM C:\Pw\Working\PITT\dms80930\Abut A&B sht1.dgn

REG	STATE	PROJECT	SHEET NO.
-	VA	VA-A-AD-48(1)	R7

POINT	ELEVATIONS	
	ABUT. A	ABUT. B
A	138.85	140.09
B	139.06	140.30
C	139.26	140.50
D	139.47	140.71
E	139.67	140.91
F	139.62	140.86
G	139.45	140.69
H	139.29	140.53
I	139.12	140.36
J	146.92	148.18
K	146.80	148.06
L	146.80	148.06
M	145.86	147.12
N	137.43	138.67
O	146.19	147.45
P	137.43	138.67

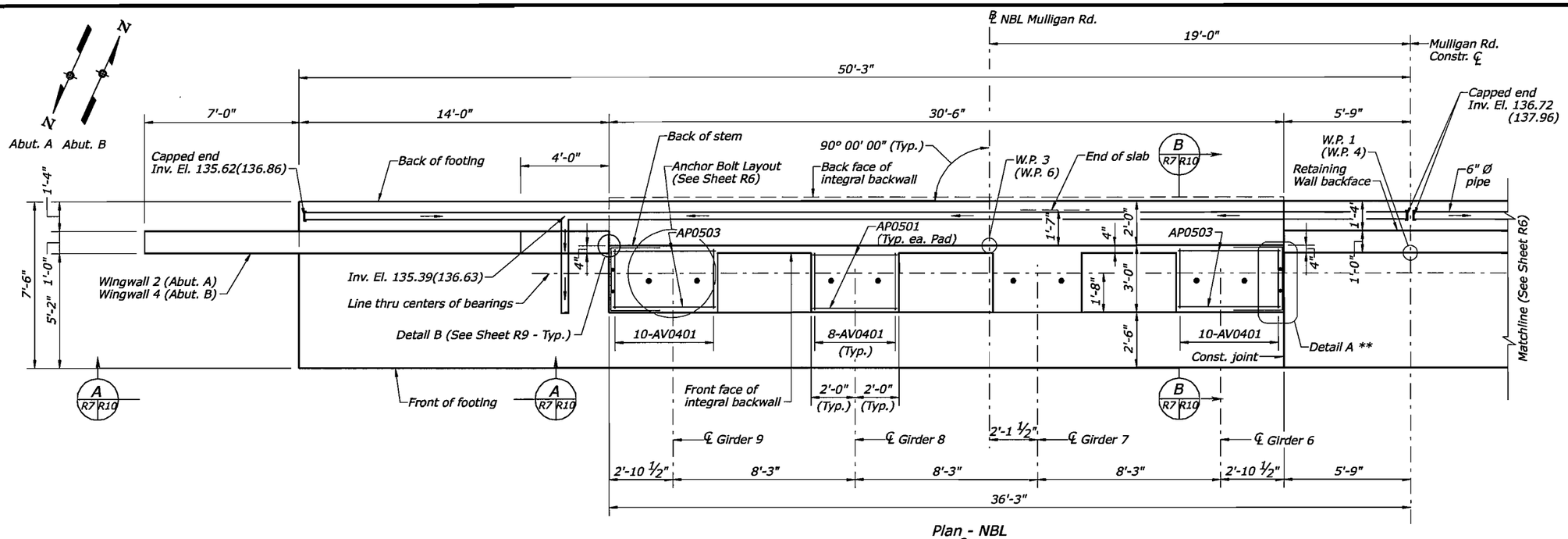

Plan - NBL

Scale : 3/8" = 1'-0"

Abutment A shown (Abutment B similar - opposite hand)
Reinforcement in footing not shown for clarity)

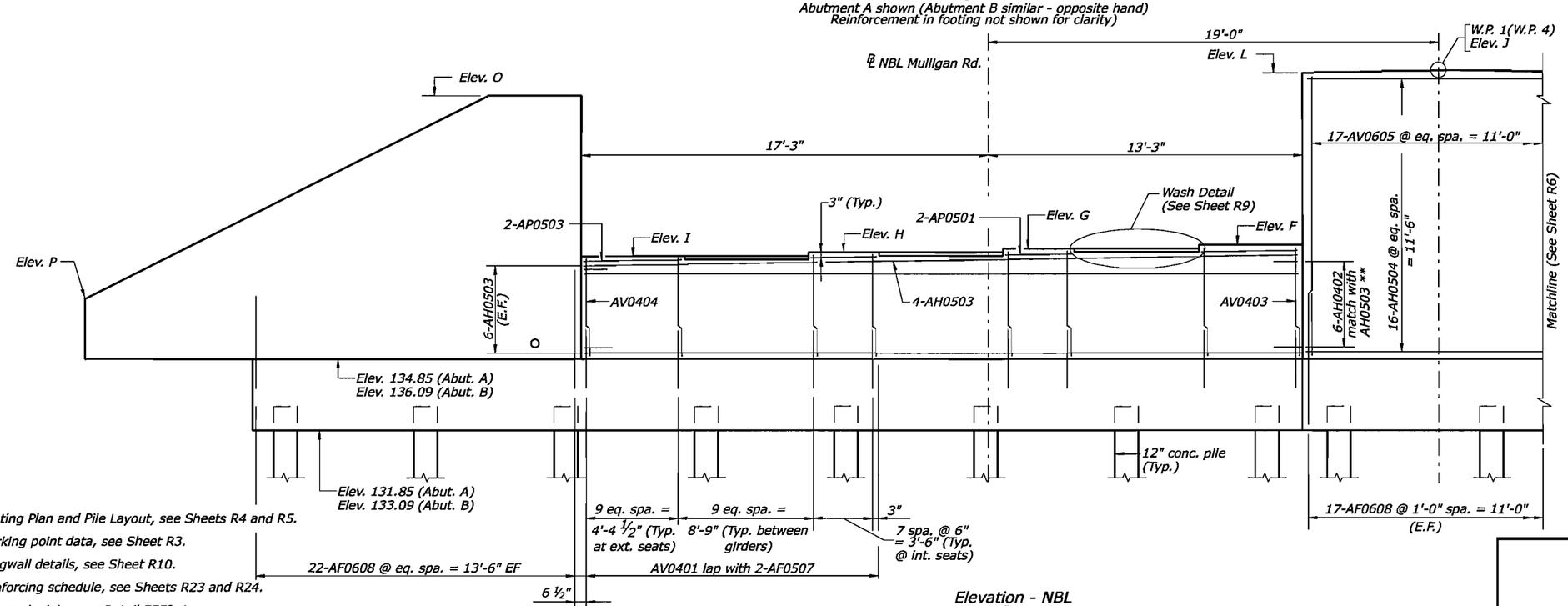

Elevation - NBL

Scale : 3/8" = 1'-0"

Abutment A shown (Abutment B similar - opposite hand)
Reinforcement in footing not shown for clarity)

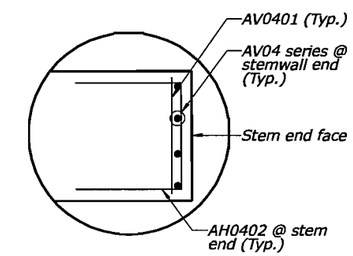

Detail A

Not to Scale

Notes:

1. For Footing Plan and Pile Layout, see Sheets R4 and R5.
2. For working point data, see Sheet R3.
3. For wingwall details, see Sheet R10.
4. For reinforcing schedule, see Sheets R23 and R24.
5. For approach slabs, see Detail E552-A.
6. Data shown in parenthesis ( ) are for Abutment B.
7. Contractor shall extend 6" Ø pipe underdrain to daylight.
8. For anchor bolt details, see Detail E564-A.
9. For View A-A and Section B-B see sheet R10.

Legend:
E.F. = Each Face
** = Typical each end

U.S. DEPARTMENT OF TRANSPORTATION
FEDERAL HIGHWAY ADMINISTRATION
EASTERN FEDERAL LANDS HIGHWAY DIVISION
STERLING, VIRGINIA

FORT BELVOIR - MULLIGAN ROAD
MULLIGAN ROAD OVER KINGMAN ROAD

ABUTMENT PLAN AND ELEVATION

Sheet 2 of 2

6/18/2008 2:56:30 PM C:\PwWorking\PITT\dms80930\Abut A&B sht2.dgn

REG	STATE	PROJECT	SHEET NO.
-	VA	VA-A-AD-48(1)	R8

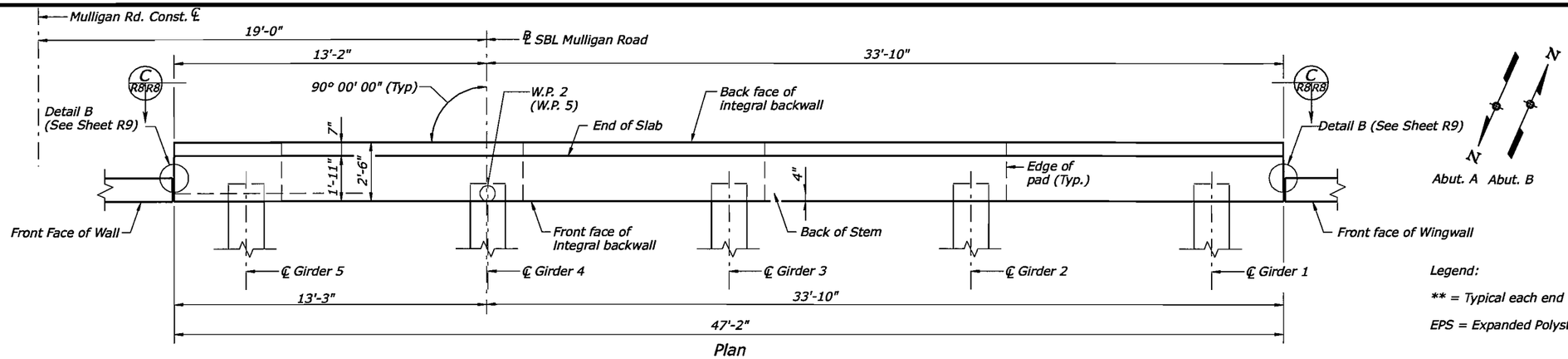

Plan

Scale: 3/8" = 1'-0"

Abutment A shown (Abutment B similiar - opposite hand)

Legend:

** = Typical each end

EPS = Expanded Polystyrene

Notes:

1. For Abutment Plan and Elevation, see Sheets R6 & R7.
2. For reinforcing schedule, see Sheets R23 and R24.
3. Integral backwall concrete shall be placed and cured to a minimum compressive strength of 3000 psi prior to placement of deck concrete.
4. Backfill operations above seat level shall not be started until deck has been placed and cured to a minimum compressive strength of 3000 psi. Backfill shall be placed such that the differential in fill height between both abutments does not exceed 6" after compaction.
5. For details of holes through the web and location of stud shear connectors, see Detail E555-A.
6. The Integral backwalls shall be cast when the least thermal movement of the superstructure can be expected during the period of initial set of the concrete in the backwall, e.g. at dusk or during an expected uniformly cloudy day.
7. Forms for the backwall shall be attached to the girders only; the forms shall not be attached to or blocked against the abutment stem. The backwall and forms must be free to move in relation to the abutment.
8. Data shown in parenthesis ( ) are for Abutment B.
9. Cost of EPS material to be included in the price bid of structural backfill.

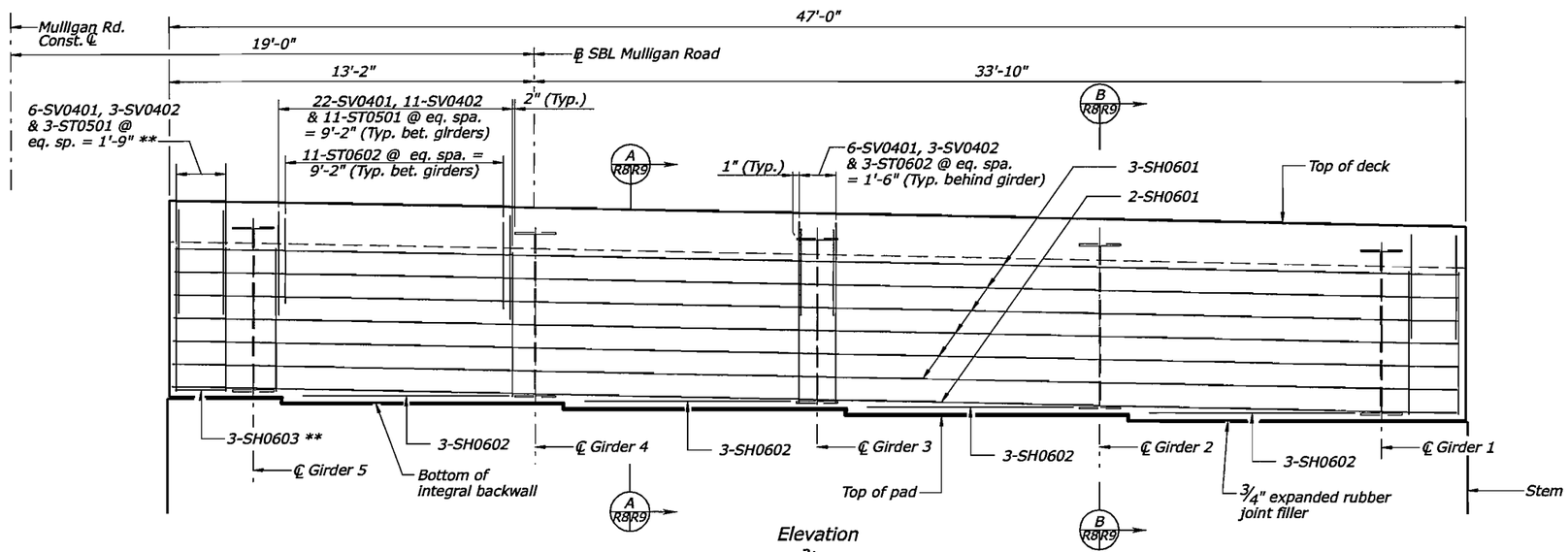

Elevation

Scale: 3/8" = 1'-0"

Abutment A shown (Abutment B similiar - opposite hand)

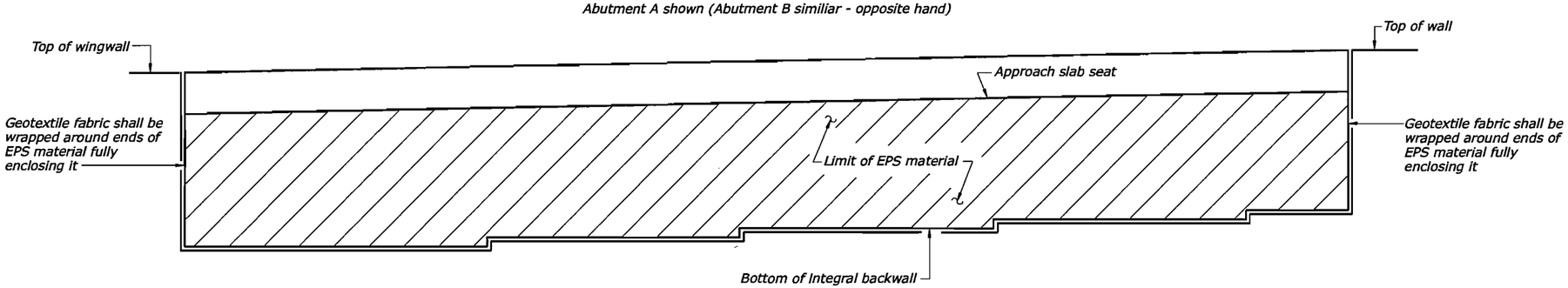

View C R8 R8

Not to scale

Abutment B only

U.S. DEPARTMENT OF TRANSPORTATION
FEDERAL HIGHWAY ADMINISTRATION
EASTERN FEDERAL LANDS HIGHWAY DIVISION
STERLING, VIRGINIA

FORT BELVOIR - MULLIGAN ROAD
MULLIGAN ROAD OVER KINGMAN ROAD

SEMI-INTEGRAL BACKWALL - PLAN AND ELEVATION

6/18/2008 3:10:52 PM C:\PwWorking\PITT\dms80930\Semi-Integral Backwall Plan and Elev.dgn

REG	STATE	PROJECT	SHEET NO.
-	VA	VA-A-AD-48(1)	R9

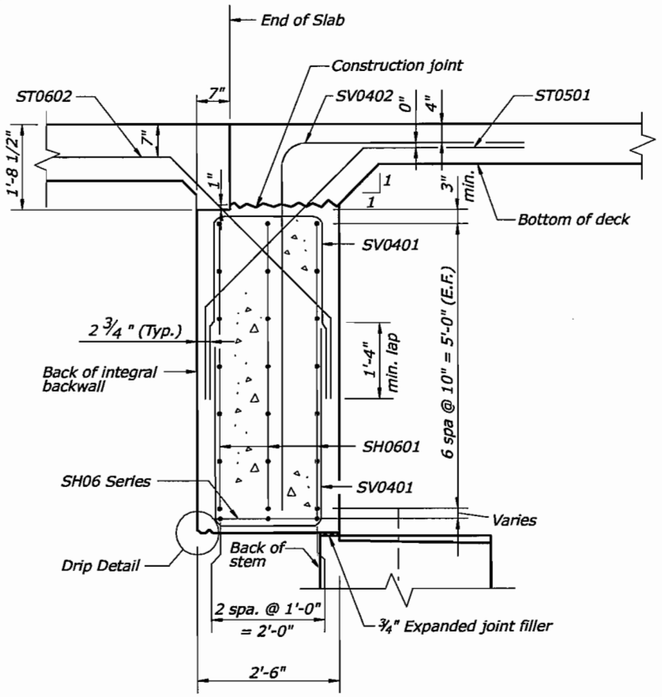

A R8 R9 (Abutment A)
Scale: 3/4" = 1'-0"
For details not shown, see Section B - (Abutment A)

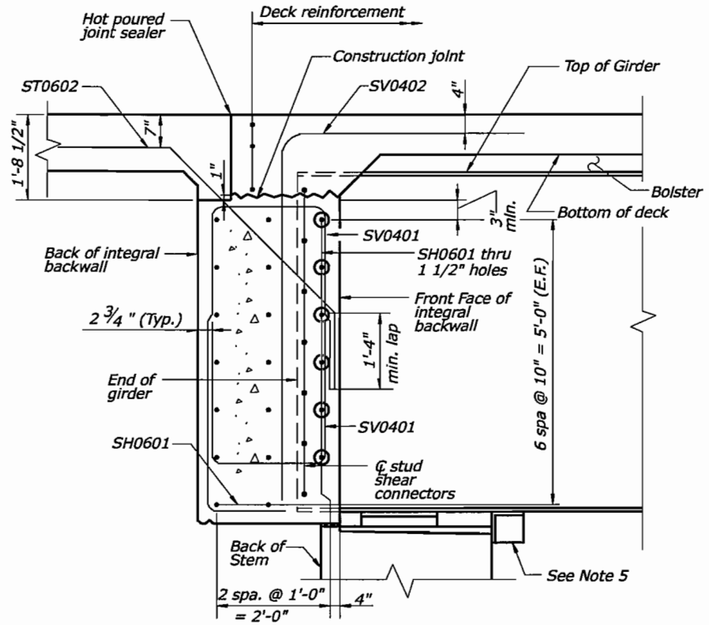

B R8 R9 (Abutment A)
Scale: 3/4" = 1'-0"
For details not shown, see Section A - (Abutment A)

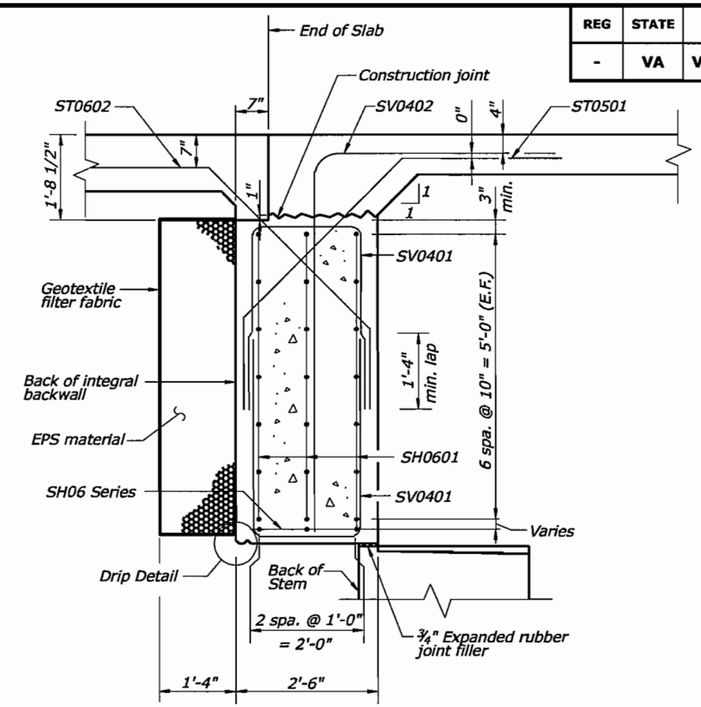

A R8 R9 (Abutment B)
Scale: 3/4" = 1'-0"
For details not shown, see Section B - (Abutment B)

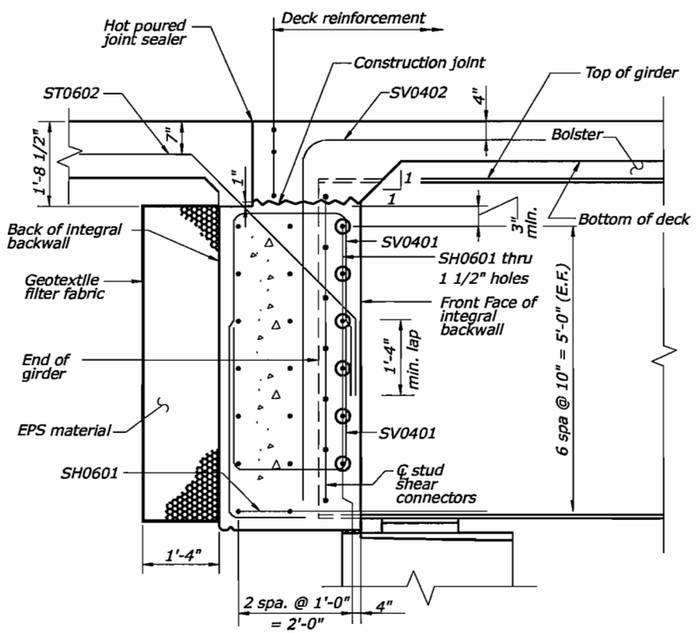

B R8 R9 (Abutment B)
Scale: 3/4" = 1'-0"
For details not shown, see Section A - (Abutment B)

Notes:
1. For Abutment Plan and Elevation, see sheets R6 and R7.
2. For Approach Slabs, see Detail E552-A.
3. For reinforcement schedules, See Sheets R23 and R24.
4. For end of slab details, see Detail E555-A.
5. The Contractor shall install temporary devices acceptable to the Engineer to prevent the superstructure from sliding during construction. Such devices are required at the lower end of each girder and shall be removed after construction is complete. The cost of the devices shall be included in cost of structural steel.

Legend:
E.F. = Each Face

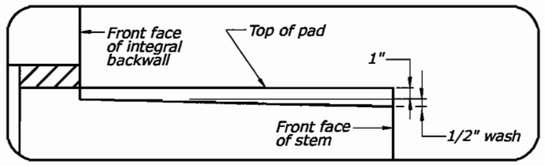

Wash Detail
Not To Scale

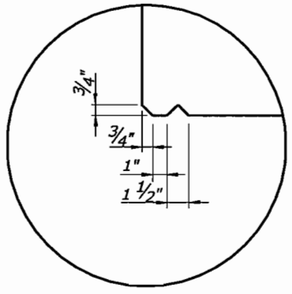

Drip Detail
Not To Scale

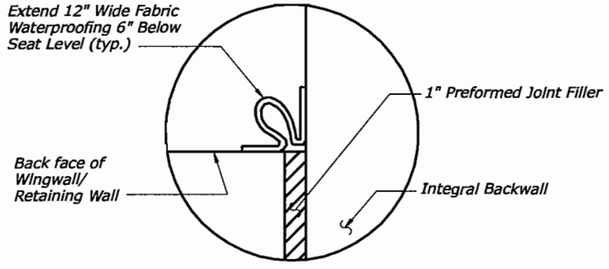

Detail B
Not To Scale

U.S. DEPARTMENT OF TRANSPORTATION
FEDERAL HIGHWAY ADMINISTRATION
EASTERN FEDERAL LANDS HIGHWAY DIVISION
STERLING, VIRGINIA

FORT BELVOIR - MULLIGAN ROAD
MULLIGAN ROAD OVER KINGMAN ROAD

SEMI-INTEGRAL BACKWALL - SECTIONS

6/18/2008 3:11:20 PM C:\PwWorking\PITT\dms80930\Semi-Integral Backwall Sections.dgn

REG	STATE	PROJECT	SHEET NO.
-	VA	VA-A-AD-48(1)	R10

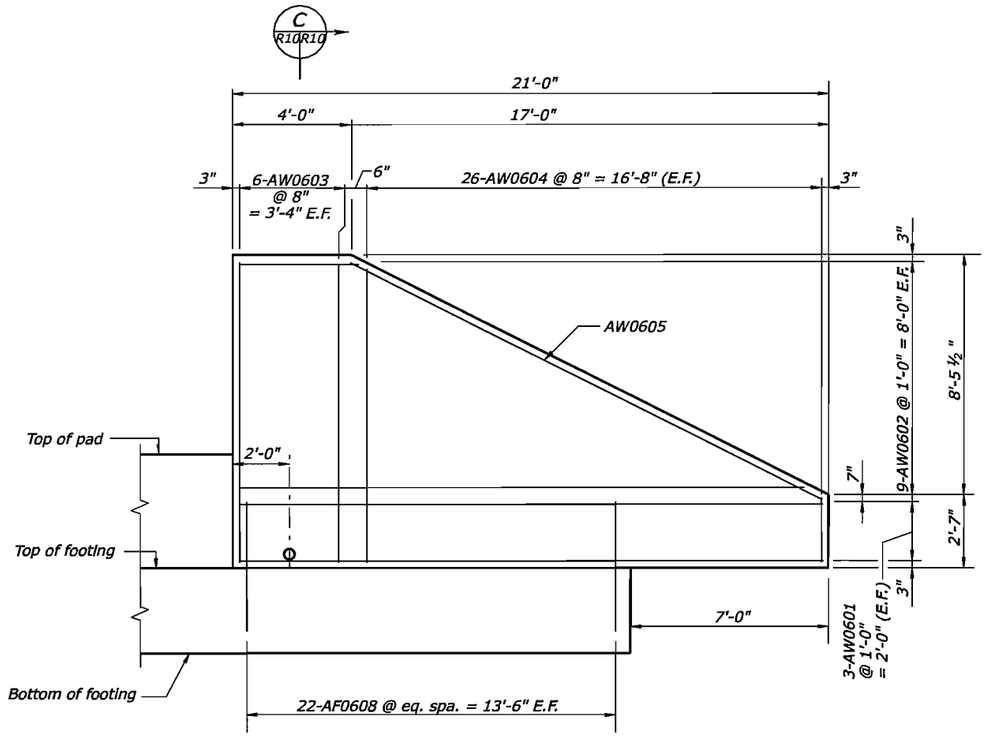

View
Scale: 3/8" = 1'-0"

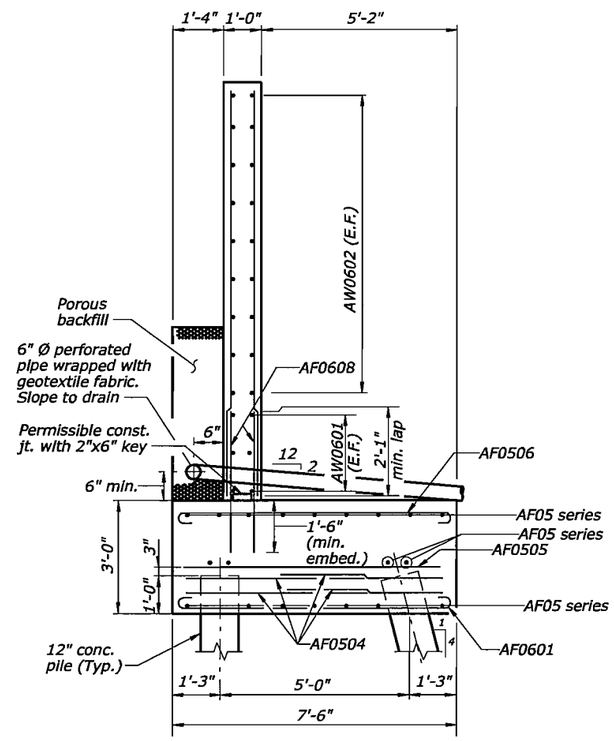

Section
Scale: ½" = 1'-0"

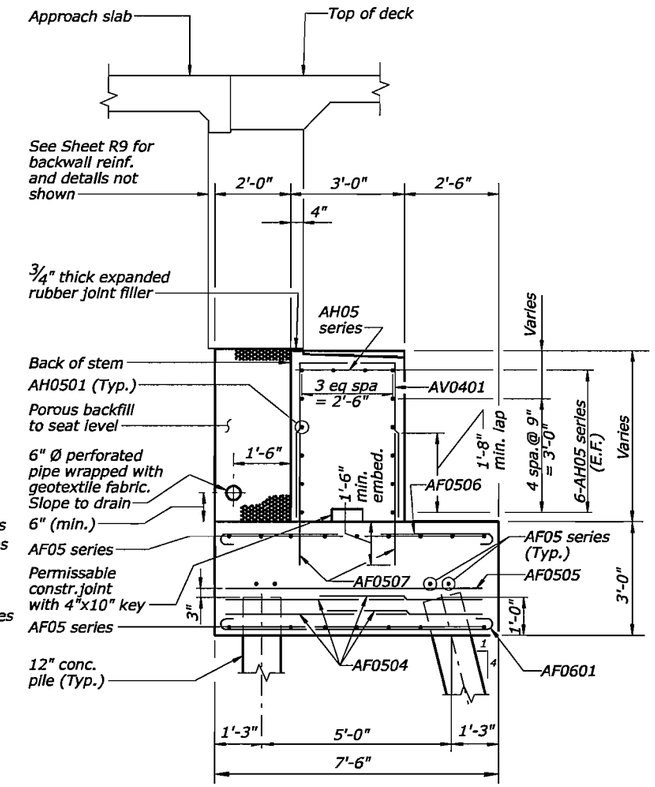

Section
Scale: ½" = 1'-0"

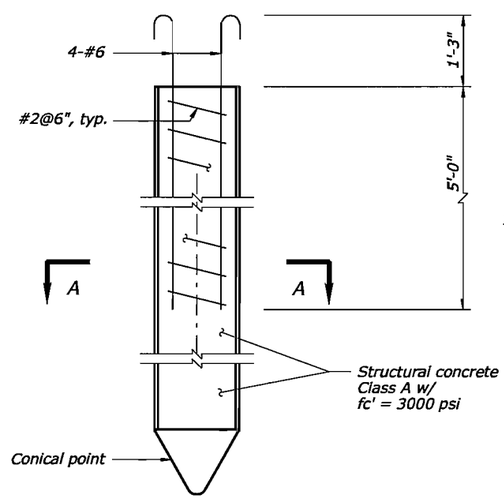

Optional cast-in-place concrete pile details

Not to scale

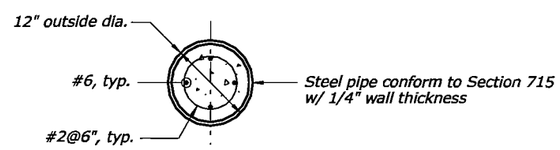

Section A-A

Note: cost of concrete and reinforcing steel shall be included in the price bid of piles.

Notes:
1. For Abutment Plan and Elevation, see Sheets R6 and R7.
2. For Footing Plan and Layout, see Sheets R4 and R5.
3. For reinforcement schedules, see Sheets R23 and R24.
4. Contractor shall extend 6" Ø pipe underdrain to daylight.
5. Contractor shall adjust 6"Ø pipe underdrain to miss reinforcement.

U.S. DEPARTMENT OF TRANSPORTATION
FEDERAL HIGHWAY ADMINISTRATION
EASTERN FEDERAL LANDS HIGHWAY DIVISION
STERLING, VIRGINIA

FORT BELVOIR - MULLIGAN ROAD
MULLIGAN ROAD OVER KINGMAN ROAD

ABUTMENT MISCELLANEOUS DETAILS

6/18/2008 2:57:11 PM C:\PwWorking\PITT\dms80930\Abut Misc Details.dgn

REG	STATE	PROJECT	SHEET NO.
-	VA	VA-A-AD-48(1)	R11

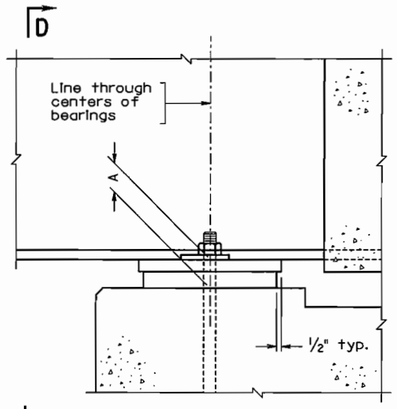

EXPANSION ASSEMBLY
ABUTMENT ELEVATION

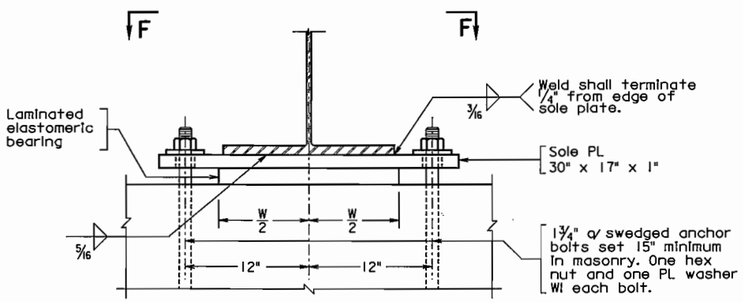

SECTION D-D

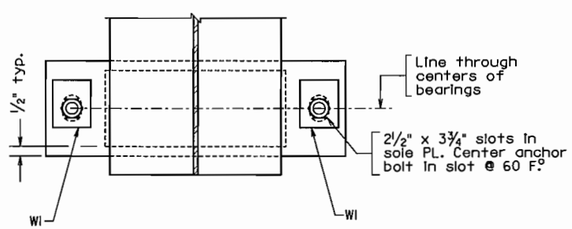

SECTION F-F

Notes:

The Contractor shall furnish elastomeric bearing assembly at the expansion bearing. The contractor shall have a professional engineer check the adequacy of the anchor bolts and redesign the sole plate and number of anchor bolts as required.

Material: Elastomer - 50 durometer hardness.
Shim - ASTM A36 or A570 mild steel.

Bevel sole plates to grade shown. Minimum sole plate thickness is 3/4". Plates shall not be painted on the surface in contact with the elastomeric bearing.

Elastomeric bearings shall be molded as a single unit.

Anchor bolts shall be AASHTO M314, Grade 55.

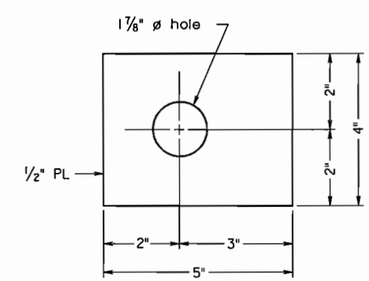

WASHER WI

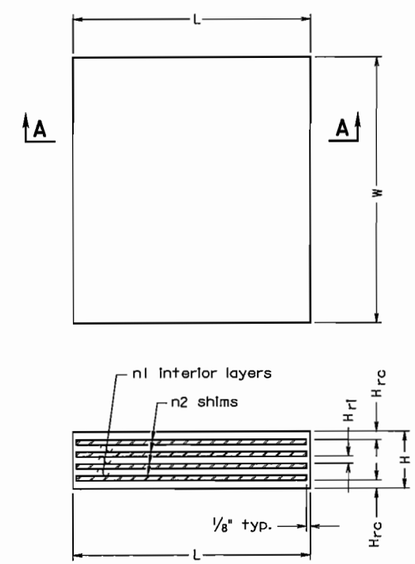

SECTION A-A
LAMINATED ELASTOMERIC BEARING

Span	Abut.	A	C	Laminated Elastomeric Bearing						Grade %	Total Vertical Load (kips)	Total Horizontal Load (kips)	Rotation (radians)	Quantity
				W	L	H	H_{rc}	n1 @ H_{rl}	n2 @ H_s					
1	A	3.103	12"	18	16	2.103	0.25	3 @ 0.3750	4 @ 0.1196	1%	255.0	6.75	2.15×10^{-3}	5
	B	3.103	12"	18	16	2.103	0.25	3 @ 0.3750	4 @ 0.1196	1%	255.0	6.75	2.15×10^{-3}	5

All dimensions in table are in inches.

Not to scale

U.S. DEPARTMENT OF TRANSPORTATION
FEDERAL HIGHWAY ADMINISTRATION
EASTERN FEDERAL LANDS HIGHWAY DIVISION
STERLING, VIRGINIA

FORT BELVOIR - MULLIGAN ROAD
MULLIGAN ROAD OVER KINGMAN ROAD

BEARING DETAILS

DET. E564-A

6/19/2008 11:51:55 AM C:\PwWorking\PITT\dms80930\bbd9.dgn

REG	STATE	PROJECT	SHEET NO.
-	VA	VA-A-AD-48(1)	R12

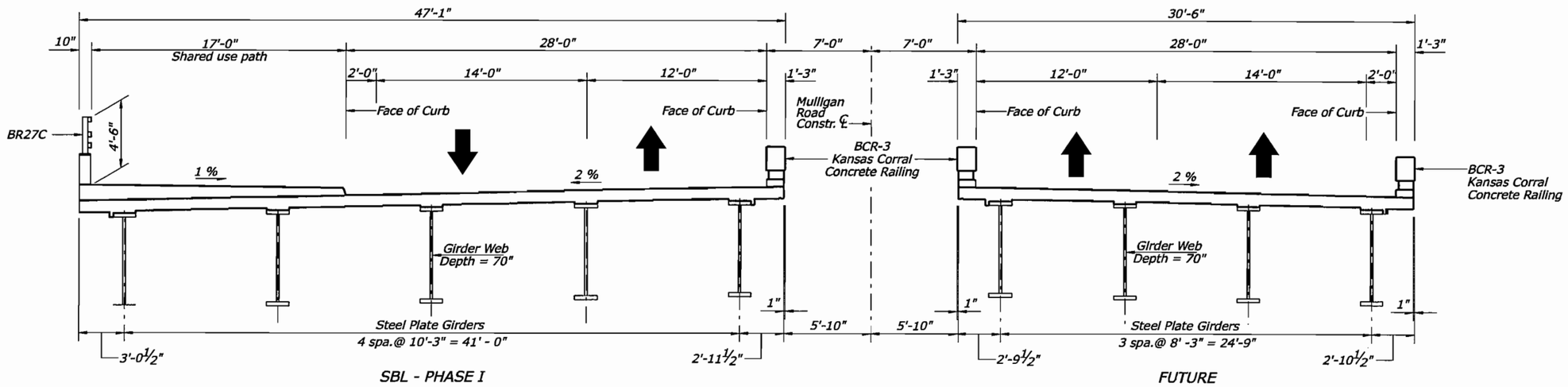

Typical Section - SBL and NBL

0 4 8
SCALE IN FEET

U.S. DEPARTMENT OF TRANSPORTATION
FEDERAL HIGHWAY ADMINISTRATION
EASTERN FEDERAL LANDS HIGHWAY DIVISION
STERLING, VIRGINIA

FORT BELVOIR - MULLIGAN ROAD
MULLIGAN ROAD OVER KINGMAN ROAD

TYPICAL SECTION- SBL AND NBL

6/19/2008 1:11:31 PM C:\PwWorking\PITT\dms80930\typical.dgn

REG	STATE	PROJECT	SHEET NO.
-	VA	VA-A-AD-48(1)	R13

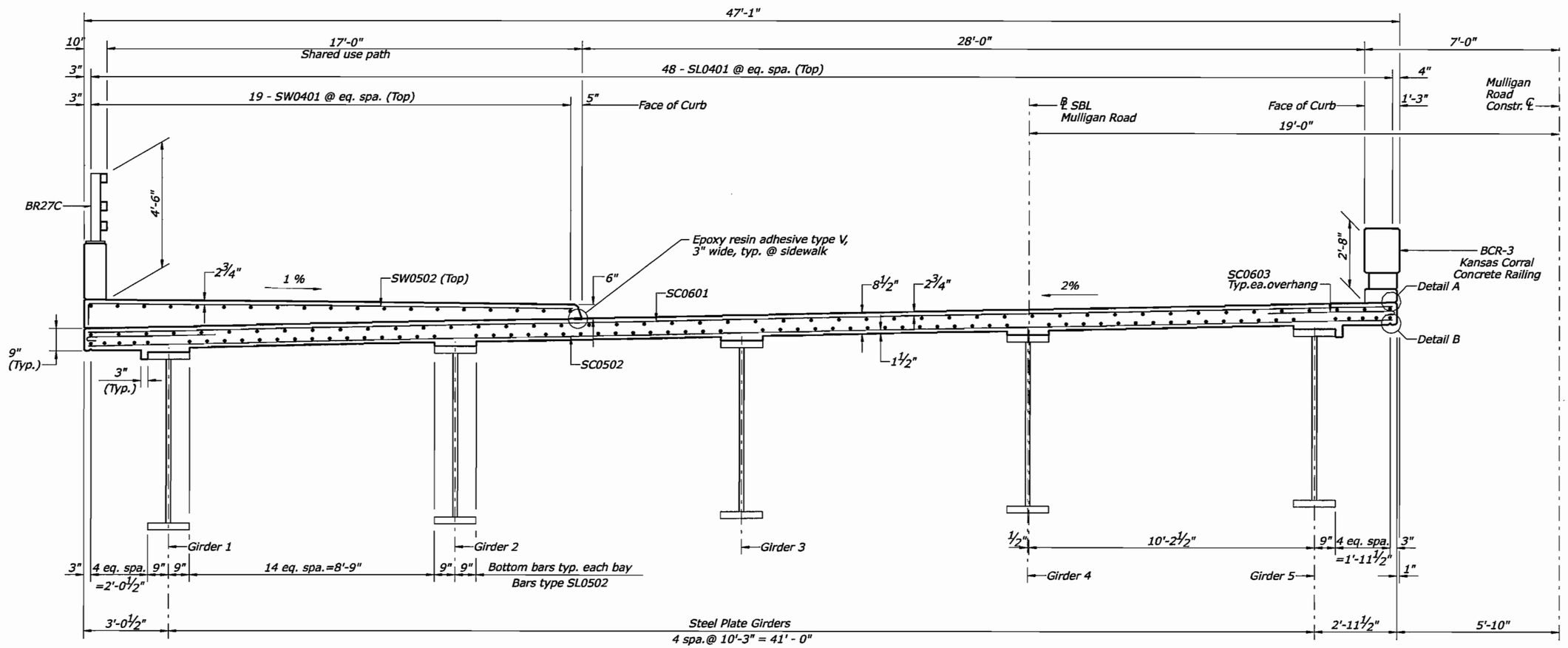

Transverse Section - SBL
Scale: ½" = 1'-0"

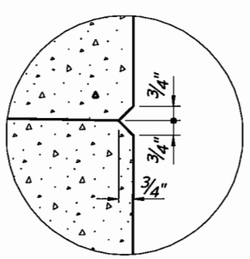

DETAIL A
Not to scale

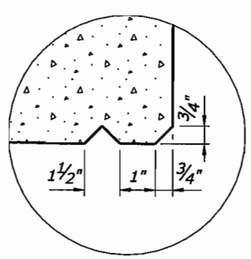

DETAIL B
Not to scale

Note: Cost of epoxy resin adhesive is included in the cost of Structural Concrete Class HPC

0 2 4
SCALE IN FEET

U.S. DEPARTMENT OF TRANSPORTATION
FEDERAL HIGHWAY ADMINISTRATION
EASTERN FEDERAL LANDS HIGHWAY DIVISION
STERLING, VIRGINIA

FORT BELVOIR - MULLIGAN ROAD
MULLIGAN ROAD OVER KINGMAN ROAD

TRANSVERSE SECTION - SBL

6/19/2008 2:51:49 PM C:\PWworking\PITT\dms80930\transverse.dgn

REG	STATE	PROJECT	SHEET NO.
-	VA	VA-A-AD-48(1)	R14

Notes:

1. For girder details, see sheet R15.
2. For cross frame details, see sheet R15.
3. For bearing stiffener and cross frame connector detail, see sheet R15.

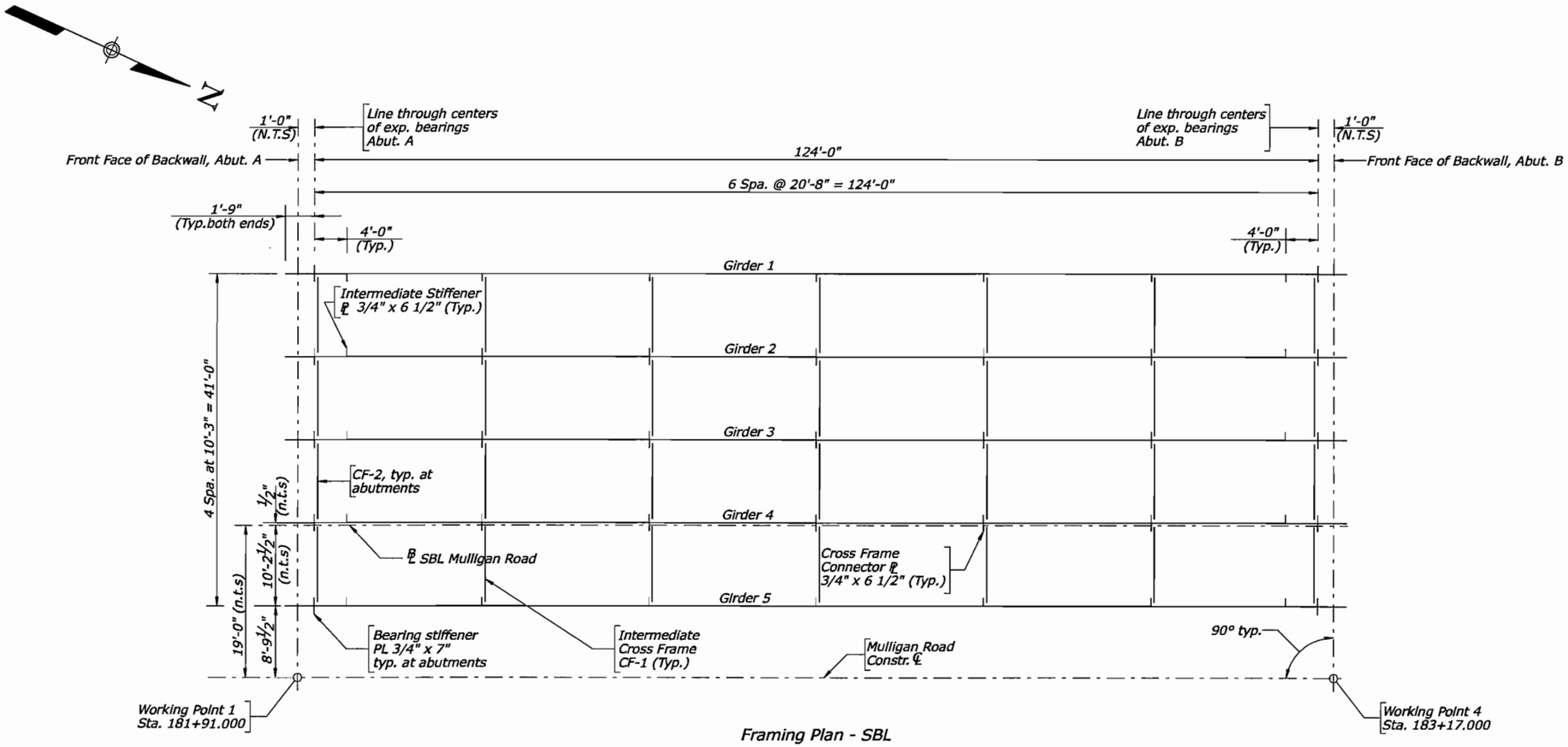

Framing Plan - SBL

Scale: 1/8" = 1'-0"

U.S. DEPARTMENT OF TRANSPORTATION
FEDERAL HIGHWAY ADMINISTRATION
EASTERN FEDERAL LANDS HIGHWAY DIVISION
STERLING, VIRGINIA

FORT BELVOIR - MULLIGAN ROAD
MULLIGAN ROAD OVER KINGMAN ROAD

FRAMING PLAN - SBL

6/18/2008 3:05:58 PM C:\PwWorking\PITT\dms80930\framing plan.dgn

REG	STATE	PROJECT	SHEET NO.
-	VA	VA-A-AD-48(1)	R15

Notes:

All structural steel shall be ASTM A709 Grade 50W.

The top & bottom flanges as shown in Girder Elevation, the web and all splice plates are areas of tensile stress for Charpy V-Notch Impact requirements.

For Framing Plan, see sheet R14.

Symbol ø = diameter.

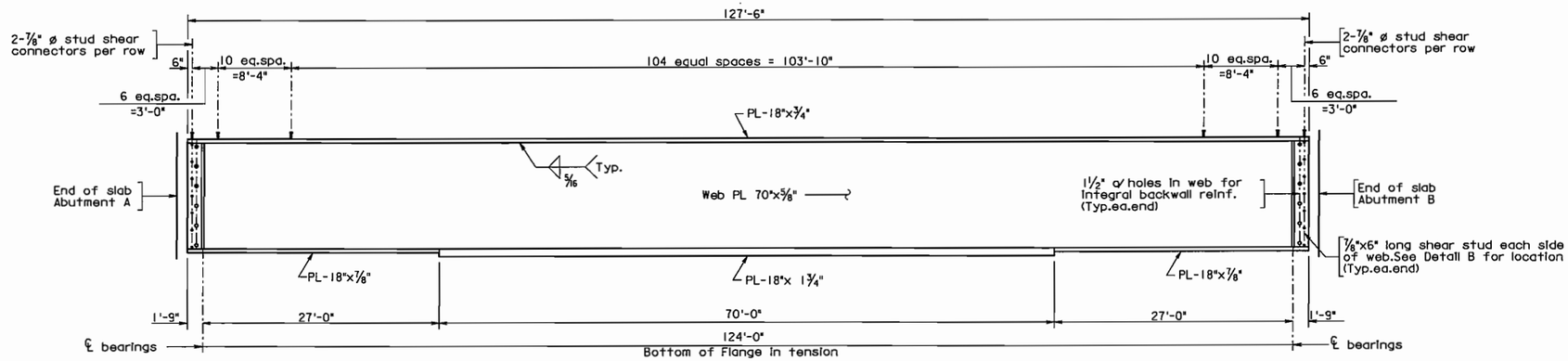

GIRDER ELEVATION

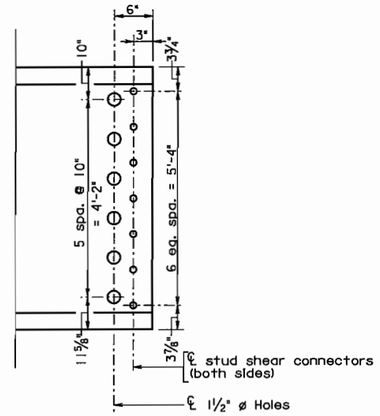

DETAIL B

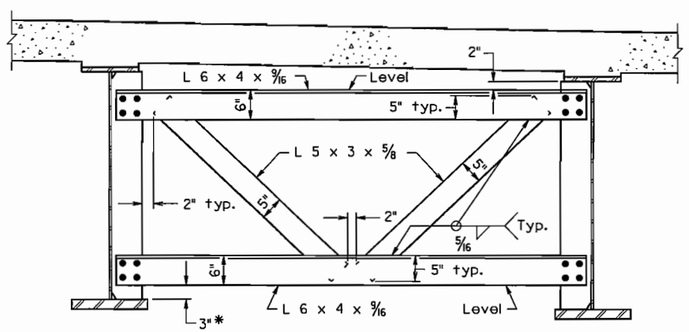

CROSS FRAME - CF1

*Dimension shall be 6" at piers.

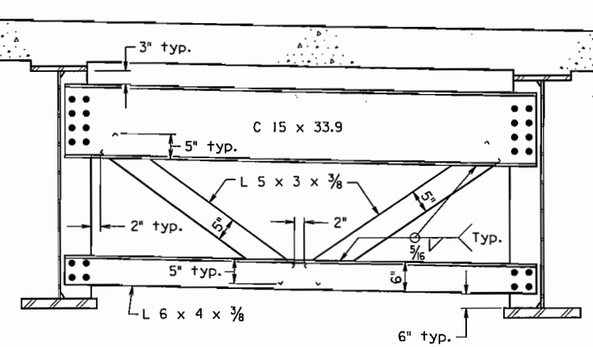

CROSS FRAME - CF2

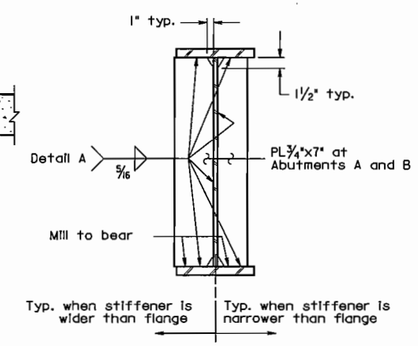

BEARING STIFFENERS

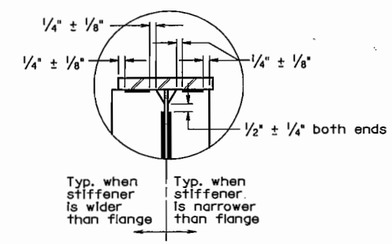

DETAIL A

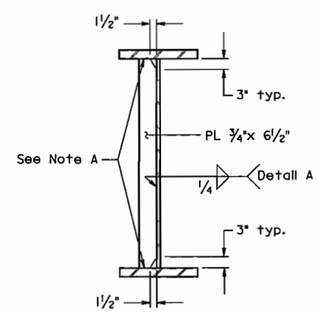

TRANSVERSE INTERMEDIATE STIFFENER

Note A: 5/8" fillet weld (both sides) to compression flange(s). Tight fit to tension flange(s).

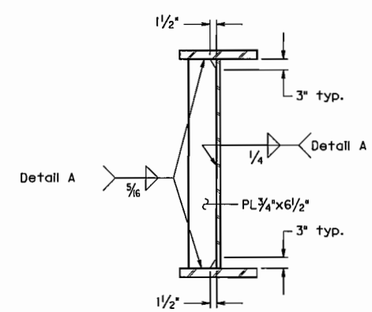

CROSS FRAME CONNECTOR PLATE

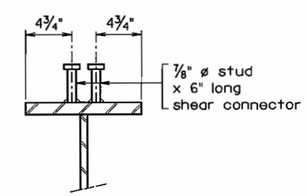

TYPICAL STUD SHEAR CONNECTOR DETAIL

Not to Scale

U.S. DEPARTMENT OF TRANSPORTATION
FEDERAL HIGHWAY ADMINISTRATION
EASTERN FEDERAL LANDS HIGHWAY DIVISION
STERLING, VIRGINIA

FORT BELVOIR - MULLIGAN ROAD
MULLIGAN ROAD OVER KINGMAN ROAD

GIRDER ELEVATION - SBL, CROSS FRAMES

DET. E555-A

6/19/2008 1:22:03 PM C:\PwWorking\PITT\dms80930\sgdetla.dgn

REG	STATE	PROJECT	SHEET NO.
-	VA	VA-A-AD-48(1)	R16

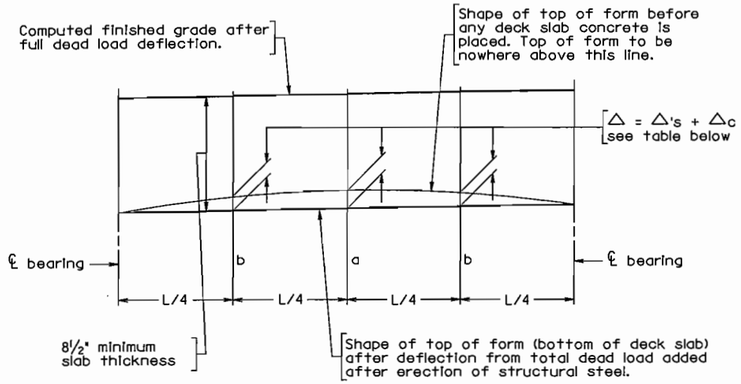

Adjustment of deck slab forms to correct for dead load deflections shall be made by varying thickness of concrete bolster between slab and girder without alteration of slab thickness. Longitudinal screed should be set above final finished grade by amounts equal to Δ_c

Girder	Dead Load Deflection at a		Dead Load Deflection at b		C	Δ_s
	Δ'_s	Δ_c	Δ'_s	Δ_c		
1thru 5	¾"	3/16"	7/16"	⅛"	1⅛"	3/16"

Δ'_s = Deflection of girder from dead load of concrete deck slab and bolsters.

Δ_c = Deflection of girder from dead load (e.g. parapet) added after deck slab is cast.

Δ_s = Deflection of girder from its own weight after erection including diaphragms, connectors, etc. at midspan.

C = The required upward camber for girder at midspan.

DEAD LOAD DEFLECTION DIAGRAM

Camber Note: Girders shall be cambered up C at midspan. Computed deflection of girder from its own weight after erection, including struts (diaphragms), connectors, etc., Δ_s at midspan.

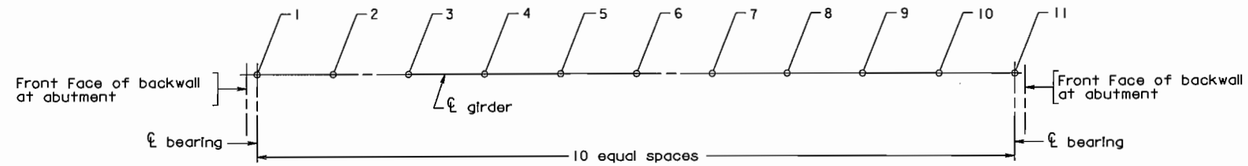

PLAN

Showing points of top of slab elevations

SBL TOP OF SLAB ELEVATIONS ALONG ℄ GIRDER											
Girder	1	2	3	4	5	6	7	8	9	10	11
1	145.93	146.06	146.18	146.31	146.43	146.55	146.68	146.80	146.93	147.05	147.17
2	146.14	146.26	146.39	146.51	146.64	146.76	146.88	147.01	147.13	147.26	147.38
3	146.34	146.47	146.59	146.72	146.84	146.96	147.09	147.21	147.34	147.46	147.58
4	146.55	146.67	146.80	146.92	147.05	147.17	147.29	147.42	147.54	147.67	147.79
5	146.75	146.88	147.00	147.13	147.25	147.37	147.50	147.62	147.75	147.87	147.99

Not to scale

U.S. DEPARTMENT OF TRANSPORTATION
FEDERAL HIGHWAY ADMINISTRATION
EASTERN FEDERAL LANDS HIGHWAY DIVISION
STERLING, VIRGINIA

FORT BELVOIR - MULLIGAN ROAD
MULLIGAN ROAD OVER KINGMAN ROAD

DEAD LOAD DEFLECTIONS AND SLAB ELEVATIONS - SBL

DET. E555-B

6/19/2008 1:23:04 PM C:\PwWorking\PITT\dms80930\sgdetl.dgn

REG	STATE	PROJECT	SHEET NO.
-	VA	VA-A-AD-48(1)	R17

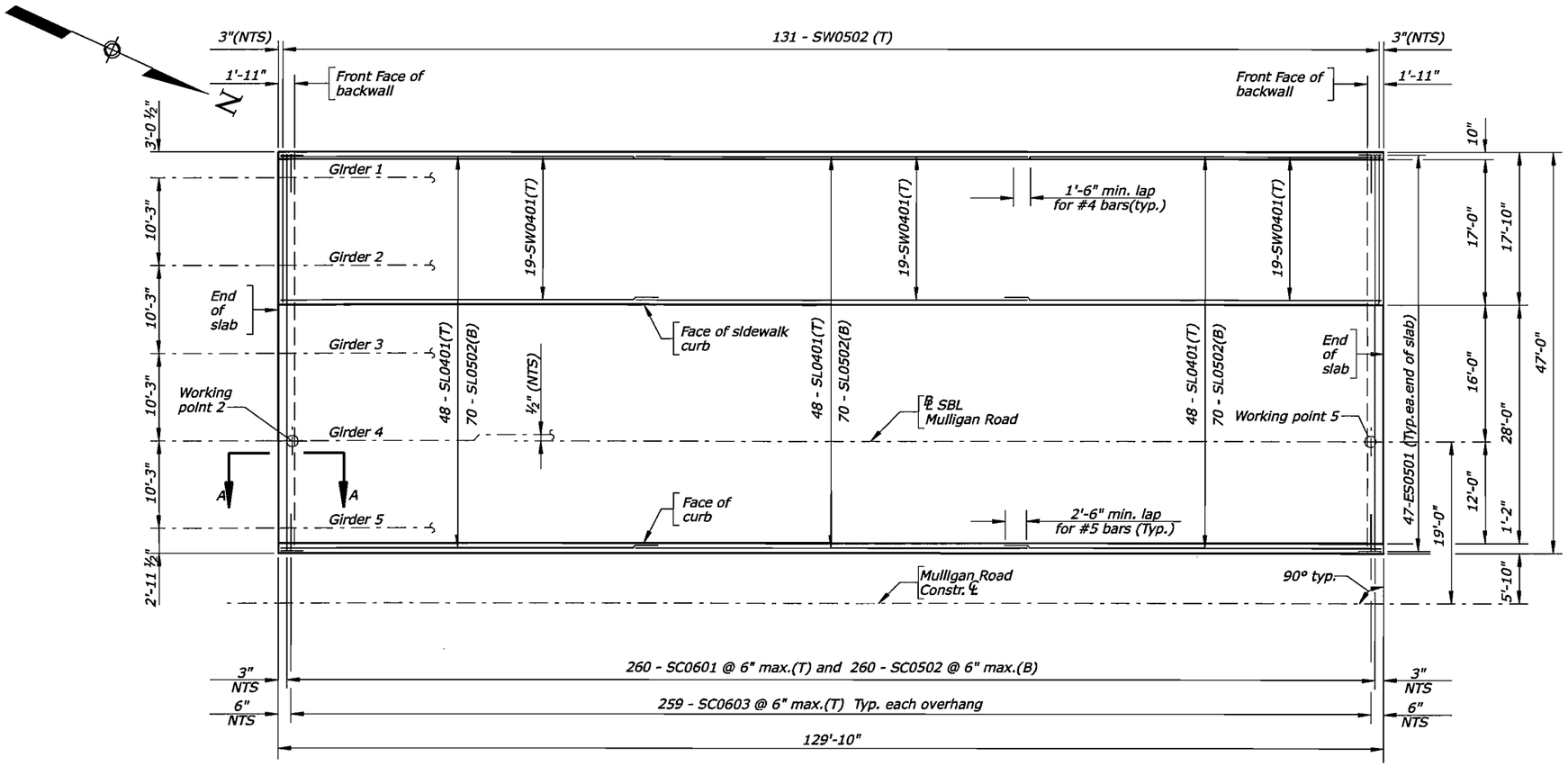

Deck Plan - SBL

Scale: 1/8" = 1'-0"

Notes:
1. For transverse section, see sheet R13.
2. For reinforcement steel schedule, see sheet R23.
3. For working point stations, see sheet R3.

Legend:
T= Top
B=Bottom
NTS= Not To Scale

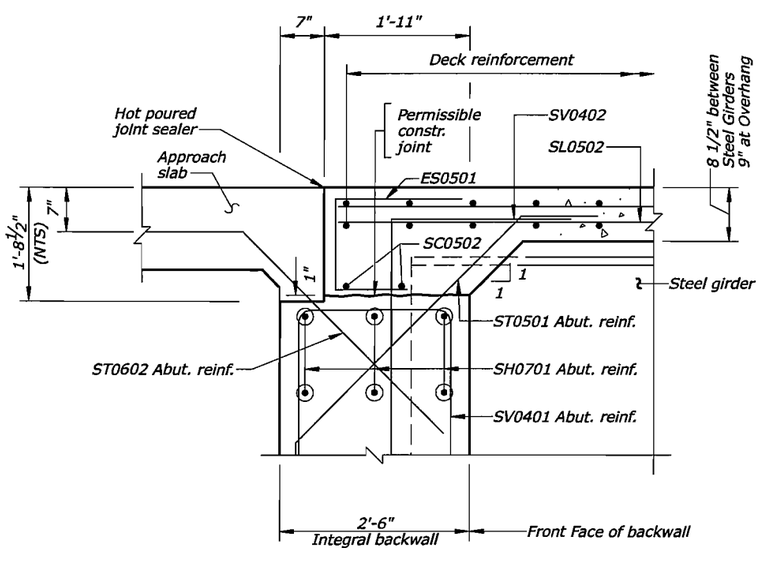

Section A-A

Scale: 1" = 1'-0"

U.S. DEPARTMENT OF TRANSPORTATION
FEDERAL HIGHWAY ADMINISTRATION
EASTERN FEDERAL LANDS HIGHWAY DIVISION
STERLING, VIRGINIA

FORT BELVOIR - MULLIGAN ROAD
MULLIGAN ROAD OVER KINGMAN ROAD

DECK PLAN - SBL

6/18/2008 3:02:30 PM C:\PwWorking\PITT\dms80930\deck plan.dgn

REG	STATE	PROJECT	SHEET NO.
-	VA	VA-A-AD-48(1)	R18

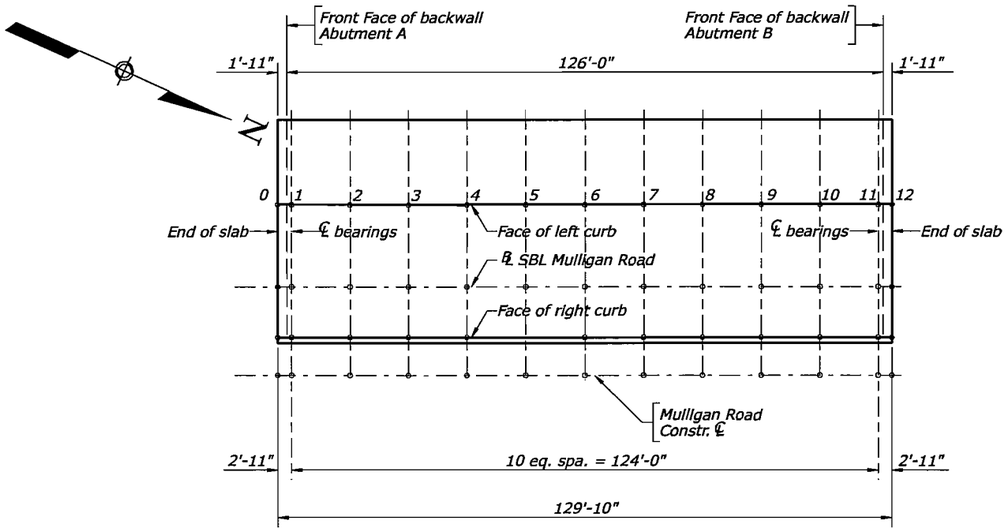

Deck Slab Elevations - SBL

Not to scale

Notes:
1. For transverse section, see sheet R13.
2. For reinforcement steel schedule, see sheet R23.
3. For working points stations, see sheet R3.

Top of Slab Elevations - SBL				
Point	Face of left curb	℄ SBL Mulligan Road	Face of right curb	Mulligan Road Construction ℄
0	146.20	146.52	146.76	146.90
1	146.23	146.55	146.79	146.93
2	146.35	146.67	146.91	147.05
3	146.48	146.80	147.04	147.18
4	146.60	146.92	147.16	147.30
5	146.73	147.05	147.29	147.43
6	146.85	147.17	147.41	147.55
7	146.97	147.29	147.53	147.67
8	147.10	147.42	147.66	147.80
9	147.22	147.54	147.78	147.92
10	147.35	147.67	147.91	148.05
11	147.47	147.79	148.03	148.17
12	147.50	147.82	148.06	148.20

U.S. DEPARTMENT OF TRANSPORTATION
FEDERAL HIGHWAY ADMINISTRATION
EASTERN FEDERAL LANDS HIGHWAY DIVISION
STERLING, VIRGINIA

FORT BELVOIR - MULLIGAN ROAD
MULLIGAN ROAD OVER KINGMAN ROAD

DECK SLAB ELEVATIONS - SBL

6/18/2008 3:04:37 PM C:\PwWorking\PITT\dms80930\deck slab elev.dgn

REG	STATE	PROJECT	SHEET NO.
-	VA	VA-A-AD-48(1)	R19

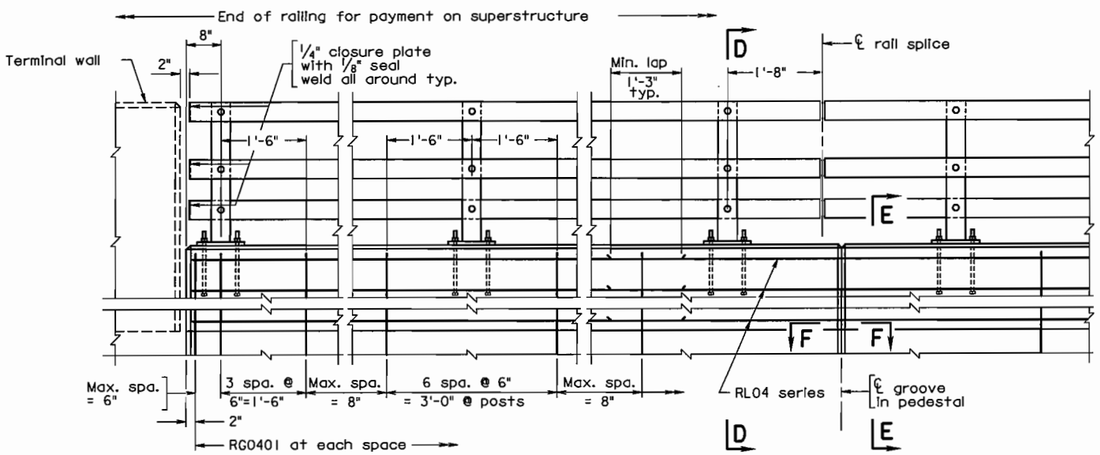

ELEVATION

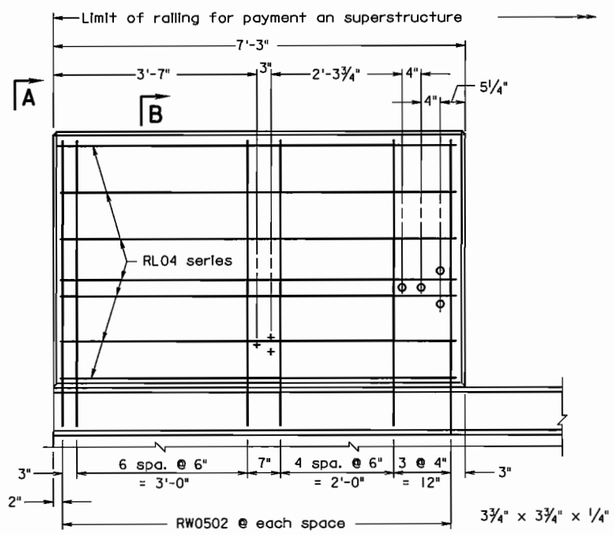

ABUTMENTS TERMINAL WALL

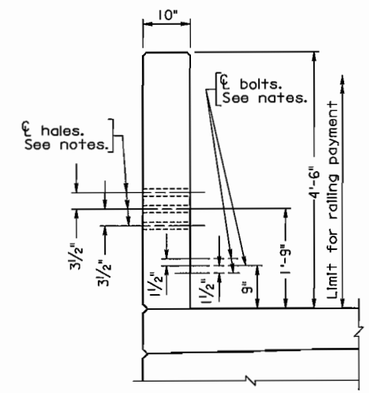

VIEW A-A

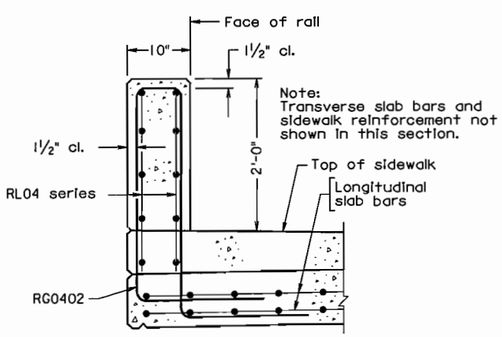

SECTION E-E
Scale: 1" = 1'-0"

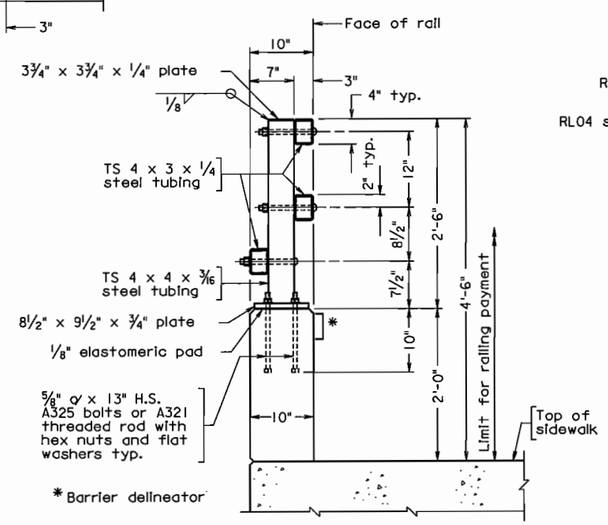

SECTION D-D
Scale: 1" = 1'-0"

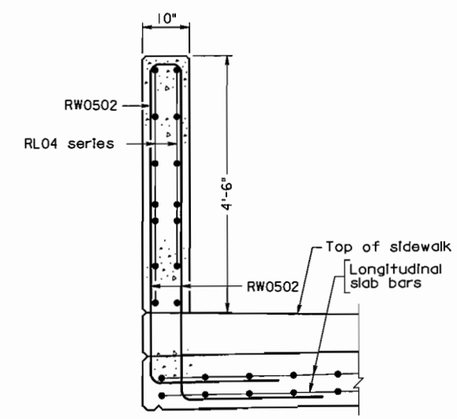

SECTION B-B

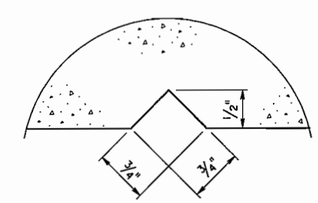

SECTION F-F
Full scale
Groove detail for both sides of rail

Scale: 3/4" = 1'-0" unless otherwise noted.

Notes:

Reinforcing bars RG0401, RG0402, RW0501 and RW0502 shall be galvanized. All other reinforcing bars shall be epoxy coated.

All concrete shall be Class A(AE), f'c=4000 psi.

All bevels for concrete on this sheet shall be 3/4".

Plates shall be ASTM A36 steel.

Posts and rail members shall be ASTM A500 Grade B steel. Steel pipe sleeves shall be ASTM A53. Bolts, nuts and washers shall be ASTM A325. All steel shall be hot dip galvanized.

Posts shall be seated on neoprene pads 1/8" minimum thickness, having a nominal durometer hardness of 60. Pads shall conform to past base dimensions.

Bolts far attaching rails to posts are 1/2" diameter round head (with slot in head) with hex nut and washer. Holes in post and railing tubing shall be 5/8" diameter. Bolt extension beyond nut shall be limited ta 1/4". Galvanized metal cap shall cover nut and bolt extension.

Cut bottom of posts to match cross slope before welding so that posts will be vertical. Steel shims may be used far adjusting post alignment, maximum thickness of shim build-up nat ta exceed 1/8". Where more tilting of the post is required, the concrete shall be ground down.

Anchor bolts may be set normal to profile grade.

Terminal walls are detailed to take guardrail attachment GR-F0A-1.

Holes, where shown, shall be formed with sleeves of 1 1/2" diameter nominal pipe.

Bolts for guardrail attachment where shown shall be 5/8" diameter expansion anchor bolts 6" long to be drilled and installed when rub rail is attached.

Bid item for railing shall include rails, rail posts, bearing pads,anchor assemblies, sleeves and other associated metal parts as shown on the plans. Also included in bid item are concrete noted in plans and reinforcing steel indicated in Reinforcing Steel Schedule.

Barrier delineator size, color, and spacing to be in accordance with the Specifications. Cost of delineator to be included in the price bid for railing. Reflective surface of barrier delineator, in all instances, to be facing oncoming traffic.

1/2" diameter drain holes shall be provided in both top and bottom rails approximately half-way between posts except at open joints near pier(s). Drain holes shall be provided at each low end of rail.

Spacing of grooves for U-back wings to be approximately 8'-0". Maximum spacing of grooves in pedestal shall be limited to 3 x post spacing, shall be centered between posts and shall be no closer than 10'-0" to joints.

The Contrator shall determine all dimensions and details necessary for installation.

The Contractor is not allowed to slipform the parapet nor to drill the posts anchor bolts in place.

Fabricator's notes:

Rails to be continuous over a minimum of 3 posts before splicing.

Posts shall be equally spaced. Maximum spacing is 7'-0". Minimum spacing is 6'-6".

Rail expansion joint shall be provided between any two posts which span a bridge expansion joint. Dimension A for expansion joints is equal to deck joint opening + 1". Bolts in slot shall be tightened only to a point that will allow railing movement.

For rail splice details and rail expansion joint details, see DET. E556-A (Sheet 2 of 2).

U.S. DEPARTMENT OF TRANSPORTATION
FEDERAL HIGHWAY ADMINISTRATION
EASTERN FEDERAL LANDS HIGHWAY DIVISION
STERLING, VIRGINIA

FORT BELVOIR - MULLIGAN ROAD
MULLIGAN ROAD OVER KINGMAN ROAD

STEEL RAILING BR27C

Sheet 1 of 2

DET. E556-A

6/19/2008 1:40:28 PM C:\PWworking\PITT\dms80930\br27cll.dgn

REG	STATE	PROJECT	SHEET NO.
-	VA	VA-A-AD-48(1)	R20

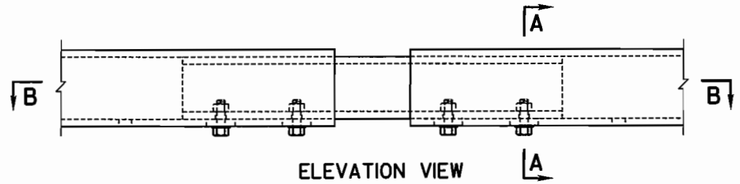

ELEVATION VIEW

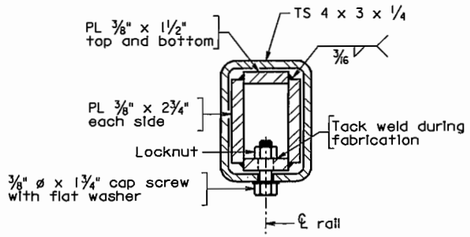

SECTION A-A
SECTION AT RAIL SPLICE

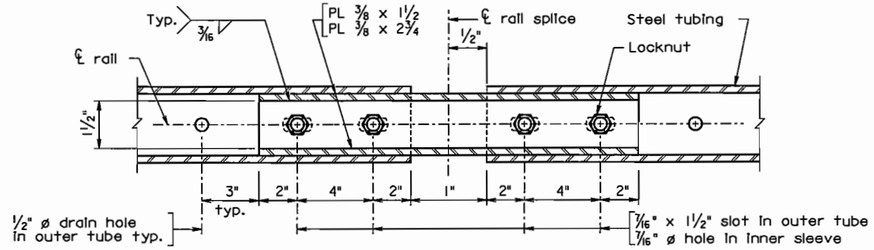

SECTION B-B

RAIL SPLICE DETAILS

Note:

Details shown for top rail. Details for bottom rail similar.

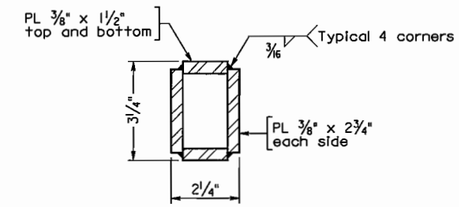

FINISHED DIMENSIONS OF INNER SLEEVE RAIL

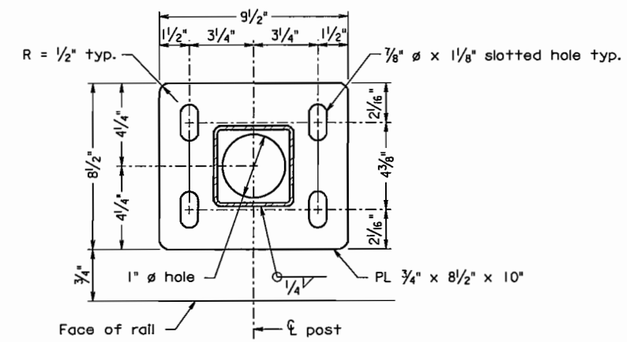

BASE PLATE DETAIL

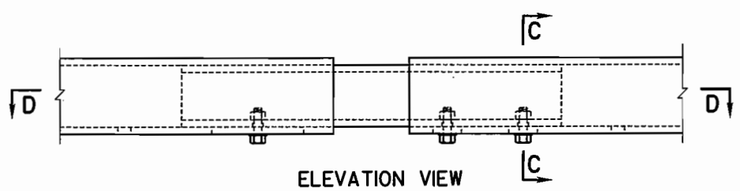

ELEVATION VIEW

REINFORCING STEEL SCHEDULE

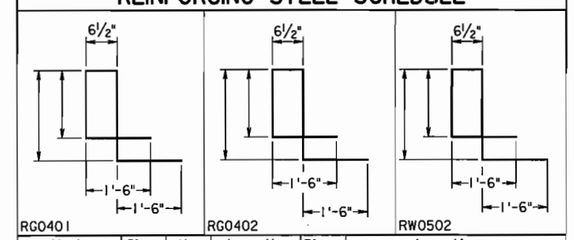

Mark	Size	No.	Length	Pin ø	Location
RG0401	#4			3"	Parapet
RG0402	#4			3"	Parapet
RW0502	#5			3 3/4"	Terminal wall and wing
RL04	#4			—	Parapet and terminal wall

Dimensions in bending diagram are out-to-out of bars.

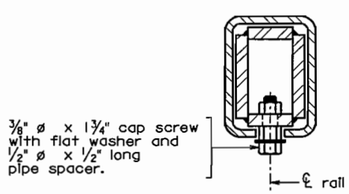

SECTION C-C
Details not shown similar to Section A-A

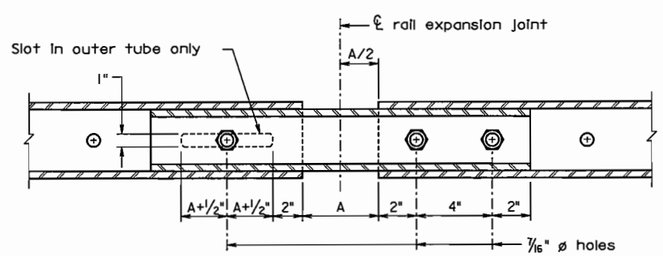

SECTION D-D
For details and dimensions not shown, see Section B-B.

RAIL EXPANSION JOINT DETAILS

Not to scale

U.S. DEPARTMENT OF TRANSPORTATION
FEDERAL HIGHWAY ADMINISTRATION
EASTERN FEDERAL LANDS HIGHWAY DIVISION
STERLING, VIRGINIA

FORT BELVOIR - MULLIGAN ROAD
MULLIGAN ROAD OVER KINGMAN ROAD

STEEL RAILING BR27C

Sheet 2 of 2 | **DET. E556-A**

6/19/2008 1:20:48 PM C:\PwWorking\PITT\dms80930\br27c3.dgn

REG	STATE	PROJECT	SHEET NO.
-	VA	VA-A-AD-48(1)	R21

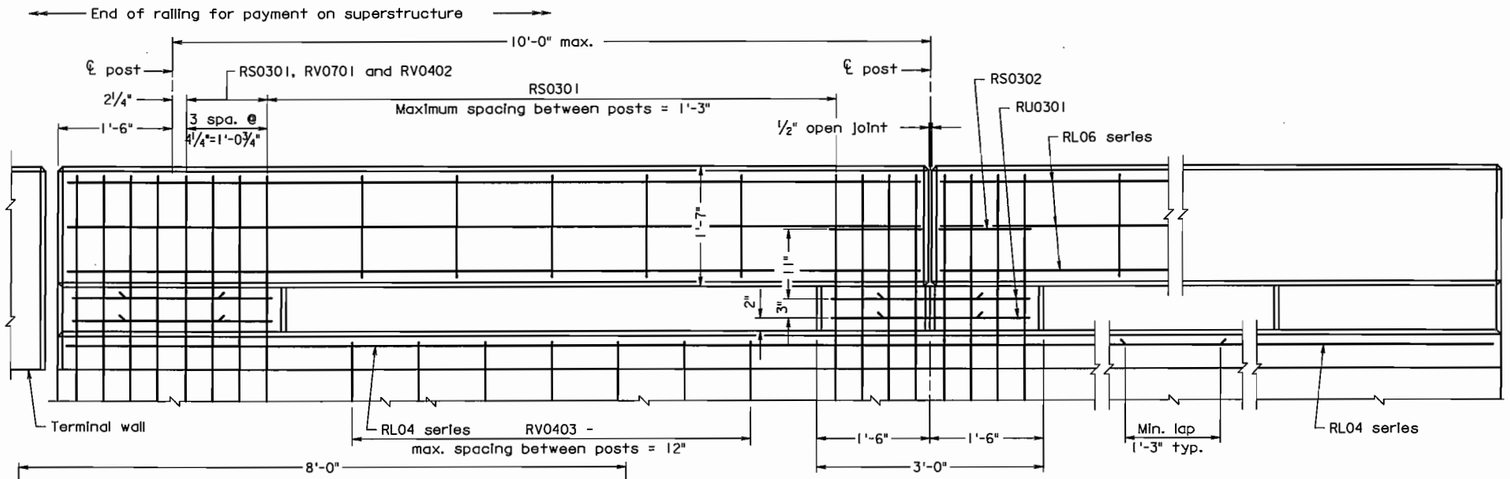

TYPICAL ELEVATION

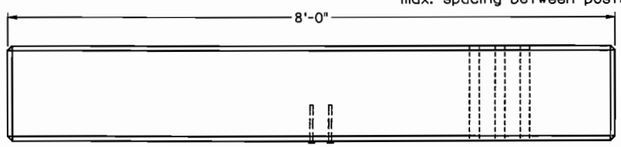

PLAN - TERMINAL WALL

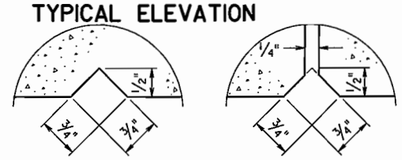

SECTION C-C
Not to scale
Groove detail for both sides of curb

SECTION D-D
Not to scale
Deflection joint detail for both sides of rail and post

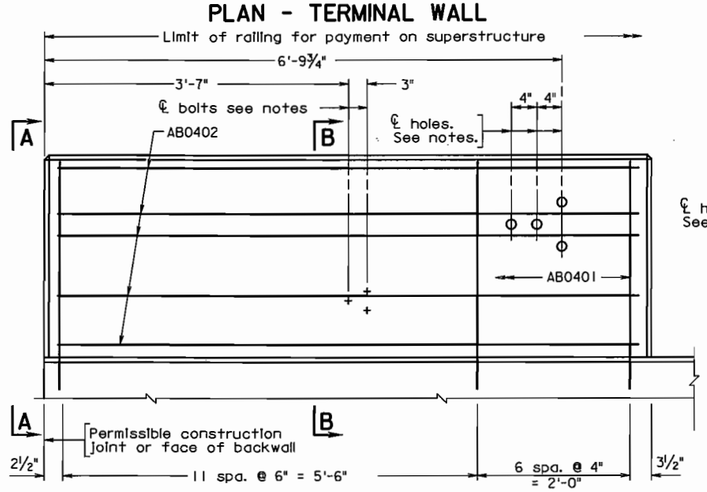

ABUTMENTS ELEVATION - TERMINAL WALL

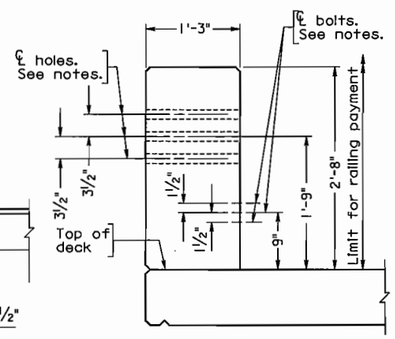

VIEW A-A

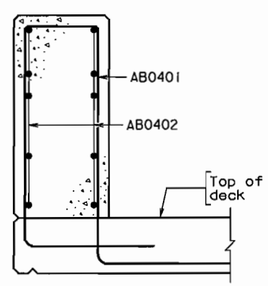

SECTION B-B

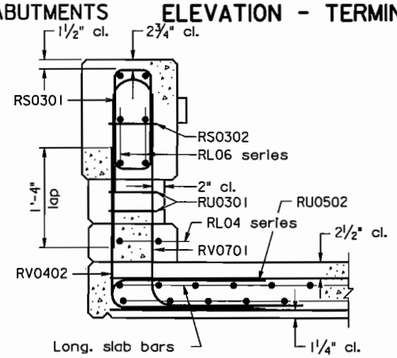

DECK SLABS

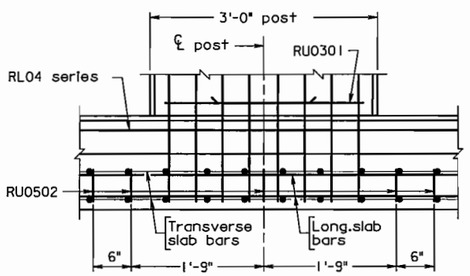

ELEVATION SHOWING RU0502 PLACEMENT DECK SLABS

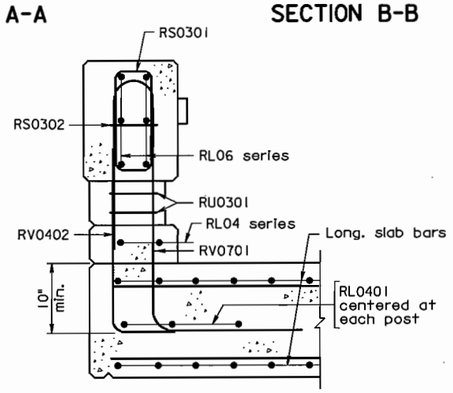

SLAB SPANS

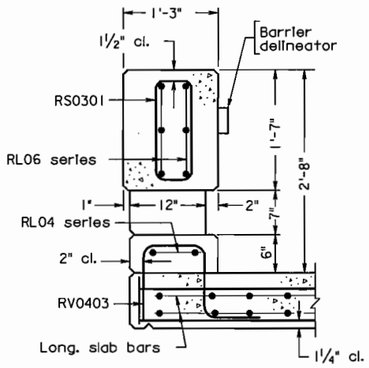

TYPICAL SECTION BETWEEN POSTS

Scale: 1" = 1'-0", unless otherwise shown.

Notes:

Reinforcing bars RV0701, RV0402 and RV0403 shall be galvanized. All other reinforcing bars shall be epoxy coated. RL0401 bars are not required for deck slabs. RU0502 bars are not required for slab spans.

Barrier delineator size, color, and spacing to be in accordance with the Specifications. Cost of delineator to be included in the price bid for railing. Reflective surface of barrier delineator, in all instances, to be facing oncoming traffic.

The Contractor shall determine all dimensions and details necessary for installation.

Each terminal wall shall be cast as one piece.

Terminal walls are detailed to take guard rail attachment GR-FOA-1.

All bevels for concrete on this sheet shall be ¾". Rounded edges with 1" radius may be used in lieu of bevels along top of terminal wall and railing.

Holes, where shown, shall be formed with sleeves of 1½" diameter nominal pipe.

Bolts, where shown, shall be ⅝" dia. expansion anchor bolts, 6" long to be drilled and installed when rub rail is attached.

All concrete shall be Class A(AE), f'c=4000 psi.

Bid item for railing shall included concrete noted in plans and reinforcing steel indicated in Reinforcing Steel Schedule.

REINFORCING STEEL SCHEDULE

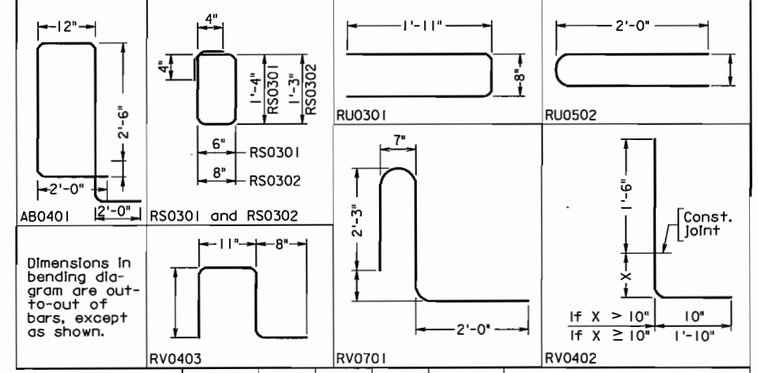

Mark	No.	Size	Pin ø	Length	Location
AB0401		#4	3"		Terminal wall
AB0402		#4	——	7'-9"	Terminal wall
RL0401		#4	——	6'-6"	Slab at posts
RL04		#4	——		Curb
RL06		#6	——		Rail
RS0301		#3	2¼"	3'-11"	Rail
RS0302		#3	2¼"	4'-1"	Posts
RU0301		#3	2¼"	4'-4"	Posts
RU0502		#5			Slab at posts
RV0701		#7	5¼"		Posts
RV0402		#4	3"		Posts
RV0403		#4	2"		Curb

Gross concrete quantities above roadway slab :
Railing : C.Y. = Lin. ft. x 0.103

U.S. DEPARTMENT OF TRANSPORTATION
FEDERAL HIGHWAY ADMINISTRATION
EASTERN FEDERAL LANDS HIGHWAY DIVISION
STERLING, VIRGINIA

FORT BELVOIR - MULLIGAN ROAD
MULLIGAN ROAD OVER KINGMAN ROAD

CAST-IN-PLACE CONCRETE RAILING (32" KANSAS CORRAL)

DET. E556-B

6/19/2008 1:07:47 PM C:\PWworking\PITT\dms80930\bcr3.dgn

...\PITT\dms80930\bcr3.dgn 6/19/2008 1:07:47 PM

REG	STATE	PROJECT	SHEET NO.
-	VA	VA-A-AD-48(1)	R22

POINTS	PICK UP POINTS
1	0.292L, 0.708L; L
2	0.207L, 0.586L, 0.207L; L
3	0.145L, 0.355L, 0.355L, 0.145L; L
4	0.107L, 0.262L, 0.262L, 0.262L, 0.107L; L

Unless special lifting devices are attached for pick-up, pick-up points shall be plainly marked on all piles after removal of the forms. The pile shall be supported only at the indicated pick-up points while in storage or while being handled.

The use of proper rigging is required to insure that the pick-up points remain in a straight line during lifting and when positioning the pile for driving.

The use of special embedded or attached lifting devices, the employment of other pick-up points or any other method of pick-up shall be subject to approval by the Engineer.

PILE PICK-UP DATA

Pile size	Approx. Wt. per LF	Maximum lengths for various pick-up systems			
		1-Point	2-Point	3-Point	4-Point
W	Lbs.	L	L	L	L
10"	140	47'	66'	95'	129'
12"	150	51'	73'	104'	141'
14"	204	55'	78'	112'	152'
16"	267	62'	88'	126'	171'
18"	338	64'	90'	129'	175'
20"	417	69'	97'	138'	188'
24"	600	72'	102'	146'	198'

Maximum lengths are determined from impact loads. L is the maximum pick-up length based on a concrete compressive strength of 5000 psi. If piles are picked up when concrete strength is less than 5000 psi, the maximum pick-up length shall be the tabulated length reduced by 1% for every 250 psi below 5000 psi.

PILE DATA

Pile size W (In.)	Strand pattern	Total no. of strands in pile	Diameter of strands In.	Strand spacings M	Strand spacings N	Prestressing force per strand pounds	Effective prestress after losses psi
10"	Square	4	1/2	1	1	28,910	966
	Circular	4	1/2	—	—	28,910	966
12"	Square	4	1/2	1	1	30,970	751
	Circular	4	1/2	—	—	30,970	751
14"	Square	6	1/2	2	1	30,970	820
	Circular	6	1/2	—	—	30,970	820
16"	Square	8	1/2	2	2	30,970	836
	Circular	8	1/2	—	—	30,970	836
18"	Square	10	1/2	3	2	30,970	826
	Circular	10	1/2	—	—	30,970	826
20"	Square	12	1/2	3	3	30,970	805
	Circular	12	1/2	—	—	30,970	805
24"	Square	16	1/2	4	4	30,970	751
	Circular	16	1/2	—	—	30,970	751

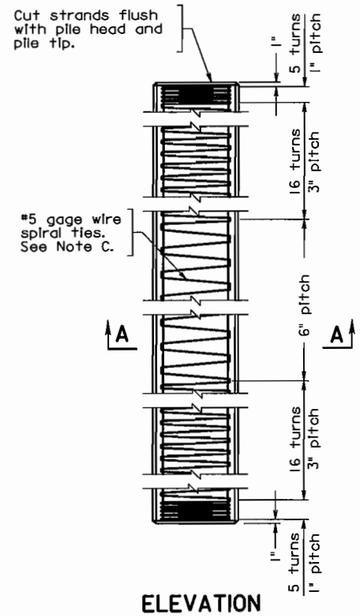

ELEVATION

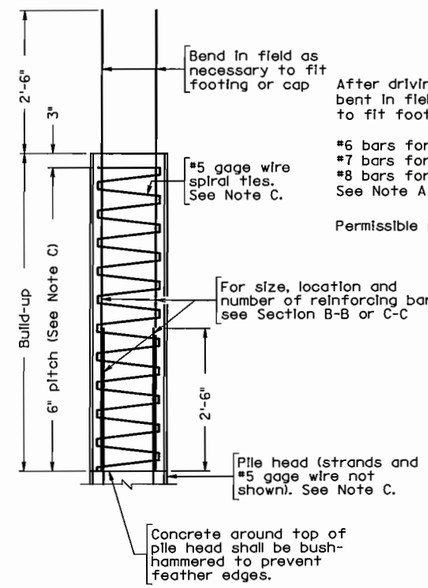

BUILD-UP WITHOUT DRIVING

See Note B

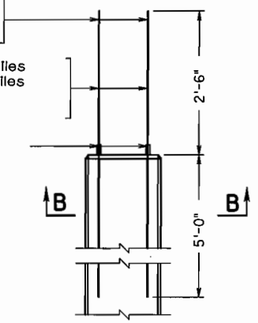

ELEVATION

Strands and #5 gage wire not shown

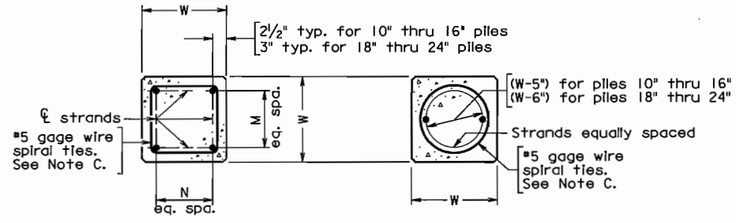

SQUARE CIRCULAR

SECTION A-A: STRAND PATTERN FOR PILE

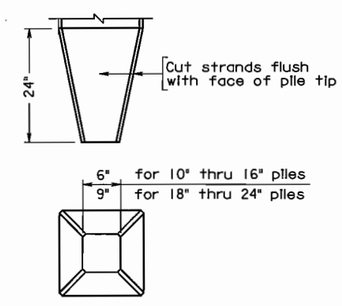

PILE TIP

Pile tip(s) shall be used only when specified. Strands not shown.

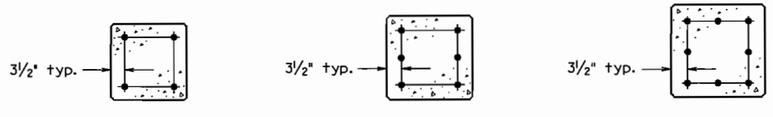

10", 12" and 14" PILES 16" and 18" PILES 20" and 24" PILES

SECTION B-B: PILE HEAD

See Note B

Note:

All concrete shall be Class P, f'c=5,000 psi having a minimum compressive cylinder strength at 28 days equal to 5000 psi and a minimum compressive cylinder strength at time of release of strands equal to 3500 psi.

All strands shall be low relaxation and shall have an ultimate strength of 270 ksi.

Deformed reinforcing bars shall conform to ASTM A615, Grade 60.

One splice will be permitted where the length of pile required is greater than the maximum for 2-point pick-up unless specifically prohibited.

Build-ups shall be used only with written permission by the Engineer and then only after driving is complete.

Subject to approval by the Engineer, the bars projecting from the pile head may be cut prior to driving and reweided upon completion of driving. The method of welding used shall develop the tensile strength of the bar.

Mechanical splices for reinforcing bars shall be in accordance with Section 554.09 of the Specifications. The Contractor shall provide adequate shielding to protect the ends of the reinforcing bars until the pile is driven and the bars are spliced.

When pile cut-off is greater than 2'-6" at least 30 inches of all the strands shall project into the cap or footing to serve for anchorage.

Where piles are exposed in bridges over tidal water such as in pile bents and in footings constructed above Mean High Tide elevation, the spiral ties and all other mild reinforcing steel in the pile shall be epoxy coated or hot dip galvanized.

Note A:
In lieu of the reinforcing bars projecting from the head:
1. The pile may be cast 2'-6" longer than required. After driving the concrete pile, remove the concrete from the added length to expose the strands. The strands must be thoroughly cleaned before casting the footing or cap; or
2. 1⅞" o/preformed plain holes or 2" o holes formed with galvanized corrugated metal may be used. After driving the pile and cleaning out the holes, the #6, #7 or #8 reinforcing bars shall be installed and the holes shall be filled with approved non-shrink grout.

Note B:
If alternate circular strand arrangement is used, bar extension must be placed to fit.

Note C:(Does not apply to this project)
For Seismic Performance Category B bridges (structures), #4/0 gage wire or #3 bars shall be used and the pitch shall be 3".

U.S. DEPARTMENT OF TRANSPORTATION
FEDERAL HIGHWAY ADMINISTRATION
EASTERN FEDERAL LANDS HIGHWAY DIVISION
STERLING, VIRGINIA

FORT BELVOIR - MULLIGAN ROAD
MULLIGAN ROAD OVER KINGMAN ROAD

PRESTRESSED CONCRETE PILES, SQUARE: 10" THRU 24"

DET. E551-A

Not to scale

6/19/2008 1:20:01 PM C:\PwWorking\PITT\dms80930\bppt.dgn

REG	STATE	PROJECT	SHEET NO.
-	VA	VA-A-AD-48(1)	R23

REINFORCING STEEL SCHEDULE

MARK	NO.	BAR SIZE	PIN DIA. FT. -INCHES	LENGTH FT. -INCHES	WEIGHT (LBS.)	LOCATION
				SUPERSTRUCTURE - DECK (EPOXY COATED)		
SC0601						DECK SLAB
SC0502						DECK SLAB
SC0603						DECK SLAB
SL0401						DECK SLAB
SL0502						DECK SLAB
SW0401						DECK SLAB
SW0502						DECK SLAB
ES0501						DECK SLAB
				ABUTMENT A - FOOTING		
AF0601						FOOTING
AF0502						FOOTING
AF0503						FOOTING
AF0504						FOOTING
AF0505						FOOTING
AF0506						FOOTING
AF0507						FOOTING
AF0608						FOOTING
				ABUTMENT A - NEAT		
AH0501						STEM
AH0402						STEM
AH0503						STEM
AH0504						
AP0501						BEARING PAD
AP0502						BEARING PAD
AP0503						BEARING PAD
AV0401						STEM
AV0402						STEM
AV0403						STEM
AV0404						STEM
AV0605						
AW0601						WINGWALL
AW0602						WINGWALL
AW0603						WINGWALL
AW0604						WINGWALL
AW0605						WINGWALL
				ABUTMENT A - NEAT (EPOXY COATED)		
SH0601						BACKWALL
SH0602						BACKWALL
SH0603						BACKWALL
SV0401						BACKWALL
				ABUTMENT A - NEAT (GALVANIZED)		
ST0501						BACKWALL
ST0602						BACKWALL
SV0402						BACKWALL
				ABUTMENT B - FOOTING		
AF0601						FOOTING
AF0502						FOOTING
AF0503						FOOTING
AF0504						FOOTING
AF0505						FOOTING
AF0506						FOOTING
AF0507						FOOTING
AF0608						FOOTING

DIMENSION TABLE

MARK	TYPE	A FT. -INCHES	B FT. -INCHES	C FT. -INCHES	D FT. -INCHES	E P FT. -INCHES	F Q FT. -INCHES	G R FT. -INCHES	H FT. -INCHES	I S FT. -INCHES	J T FT. -INCHES	K U FT. -INCHES	L FT. -INCHES
SC0601	1												
SC0502	1												
SC0603	24												
SL0401	1												
SL0502	1												
SW0401	1												
SW0502	6												
ES0501	7												
AF0601	25												
AF0502	1												
AF0503	1												
AF0504	45												
AF0505	1												
AF0506	25												
AF0507	1												
AF0608	1												
AH0501	1												
AH0402	7												
AH0503	1												
AH0504	1												
AP0501	1												
AP0502	1												
AP0503	1												
AV0401	7												
AV0402	1												
AV0403	1												
AV0404	1												
AV0605	1												
AW0601	1												
AW0602	1												
AW0603	1												
AW0604	1												
AW0605	1												
SH0601	1												
SH0602	1												
SH0603	1												
SV0401	7												
ST0501	5												
ST0602	5												
SV0402	6												
AF0601	25												
AF0502	1												
AF0503	1												
AF0504	45												
AF0505	1												
AF0506	25												
AF0507	1												
AF0608	1												

DIMENSION VARIATION TABLE

MARK	NO. EA. LEN.	DIMEN-SION	FROM FT. -INCHES	TO FT. -INCHES	VARY BY FT. -INCHES	DIMEN-SION	FROM FT. -INCHES	TO FT. -INCHES	VARY BY FT. -INCHES
AW0602		A							
AW0604		A							

BENDING DIAGRAM

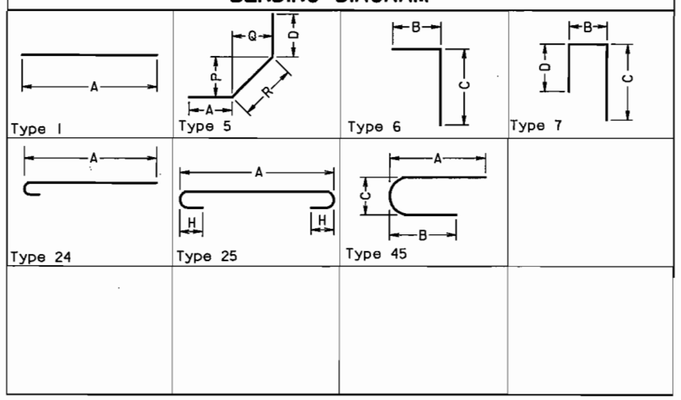

NOTES:

Dimensions in Bending Diagram are out-to-out of bars.

If fabrication of deck slab bar is not possible for length detailed and multiple bars are required, bars shall have the least number of Class B splices possible. Splices shall be located approximately at points of contraflexure and splices in alternate bars shall be located in different bays.

U.S. DEPARTMENT OF TRANSPORTATION
FEDERAL HIGHWAY ADMINISTRATION
EASTERN FEDERAL LANDS HIGHWAY DIVISION
STERLING, VIRGINIA

FORT BELVOIR - MULLIGAN ROAD
MULLIGAN ROAD OVER KINGMAN ROAD

REINFORCING STEEL SCHEDULE

Sheet 1 of 2

6/18/2008 3:09:36 PM C:\PwWorking\PITT\dms80930\eInf sbl cos.dgn

REG	STATE	PROJECT	SHEET NO.
-	VA	VA-A-AD-48(1)	R24

REINFORCING STEEL SCHEDULE

MARK	NO.	BAR SIZE	PIN DIA. FT. -INCHES	LENGTH FT. -INCHES	WEIGHT (LBS.)	LOCATION
				ABUTMENT B - NEAT		
AH0501						STEM
AH0402						STEM
AH0503						STEM
AH0504						RETAINING WALL
AP0501						BEARING PAD
AP0502						BEARING PAD
AP0503						BEARING PAD
AV0401						STEM
AV0402						STEM
AV0403						STEM
AV0404						STEM
AV0605						RETAINING WALL
AW0601						WINGWALL
AW0602						WINGWALL
AW0603						WINGWALL
AW0604						WINGWALL
AW0605						WINGWALL
				ABUTMENT B - NEAT (EPOXY COATED)		
SH0601						BACKWALL
SH0602						BACKWALL
SH0603						BACKWALL
SV0401						BACKWALL
				ABUTMENT B - NEAT (GALVANIZED)		
ST0501						BACKWALL
ST0602						BACKWALL
SV0402						BACKWALL

DIMENSION TABLE

MARK	TYPE	A FT. -INCHES	B FT. -INCHES	C FT. -INCHES	D FT. -INCHES	E P FT. -INCHES	F Q FT. -INCHES	G R FT. -INCHES	H FT. -INCHES	I S FT. -INCHES	J T FT. -INCHES	K U FT. -INCHES	L FT. -INCHES
AH0501	1												
AH0402	7												
AH0503	1												
AH0504	1												
AP0501	1												
AP0502	1												
AP05D3	1												
AV0401	7												
AV0402	1												
AV0403	1												
AV0404	1												
AV0605	1												
AW0601	1												
AW0602	1												
AW0603	1												
AW0604	1												
AW0605	1												
SH0601	1												
SH0602	1												
SH0603	1												
SV0401	7												
ST0501	5												
ST0602	5												
SV0402	6												

DIMENSION VARIATION TABLE

MARK	NO. EA. LEN.	DIMEN-SION	FROM FT. -INCHES	TO FT. -INCHES	VARY BY FT. -INCHES	DIMEN-SION	FROM FT. -INCHES	TO FT. -INCHES	VARY BY FT. -INCHES
AW0602		A							
AW0604		A							

BENDING DIAGRAM

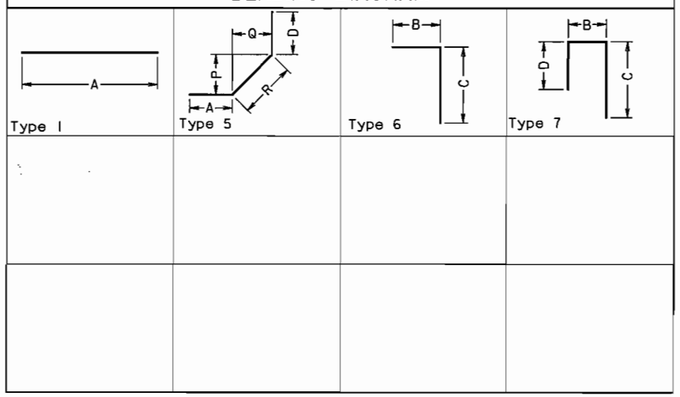

NOTES:

Dimensions in Bending Diagram are out-to-out of bars.

If fabrication of deck slab bar is not possible for length detailed and multiple bars are required, bars shall have the least number of Class B splices possible. Splices shall be located approximately at points of contraflexure and splices in alternate bars shall be located in different bays.

U.S. DEPARTMENT OF TRANSPORTATION
FEDERAL HIGHWAY ADMINISTRATION
EASTERN FEDERAL LANDS HIGHWAY DIVISION
STERLING, VIRGINIA

FORT BELVOIR - MULLIGAN ROAD
MULLIGAN ROAD OVER KINGMAN ROAD

REINFORCING STEEL SCHEDULE

Sheet 2 of 2

6/18/2008 3:09:59 PM C:\PwWorking\PITT\dms80930\reinf sbl coe.dgn

REG	STATE	PROJECT	SHEET NO.
-	VA	VA-A-AD-48(1)	R25

BS01 — ABUTMENT A

STATION: 181+61.91 OFFSET: 99.7 RT
SURFACE ELEVATION: 127.4 FT

DATE(S) DRILLED: 5/14/07
DRILLING METHOD(S): CONTINUOUS FLIGHT HSA - SPT
SPT METHOD:
OTHER TEST(S):
DRILLER: FROEHLING & ROBERTSON
LOGGER: SUE YOUNG

GROUND WATER
DTW AT 0 HRS. (5/14/2007): 39.0 FT.; 24 HR. (5/15/2007): DTW 21.0 FT.; CAVED TO 26.0 FT.

FIELD DATA: SOIL (STANDARD PENETRATION TEST, HAMMER BLOWS, % SOIL RECOVERY, SAMPLE LEGEND, SAMPLE INTERVAL); ROCK (% CORE RECOVERY, ROCK QUALITY DESIGNATION, STRATA, JOINTS); DIP; STRATA LEGEND. LAB DATA: LIQUID LIMIT, PLASTICITY INDEX, MOISTURE CONTENT (%)

DESCRIPTION OF STRATA (LL, PI)

- 0.0 / 127.4 DAMP, DARK BROWN SANDY SILT TOPSOIL WITH ROOTS (TOPS); MEDIUM STIFF
- 0.3 / 127.1 DAMP, BROWN FINE SANDY LEAN CLAY (CL); VERY STIFF
- SLIGHTLY MOIST
- ORANGEY BROWN
- MOIST TO WET; STIFF CL
- 9.2 / 118.2 MOIST, ORANGEY BROWN SILTY FINE GRAINED SAND, TRACE GRAVEL (QUARTZ FRAGMENTS) (SM); MEDIUM DENSE SM
- 12.0 / 115.4 MOIST, BROWN SILTY CLAY (CL) WITH IRON STAINED ZONES; STIFF CL
- 13.5 / 113.9 SLIGHTLY MOIST, BROWN, TAN, GRAY, WHITE, AND RED SAND AND GRAVEL (GM); MEDIUM DENSE GM
- 18.0 / 109.4 WET, ORANGEY BROWN SILTY SAND (SM); MEDIUM DENSE SM
- 23.0 / 104.4 WET, TAN, GRAY, AND BROWN SAND AND SMALL GRAVEL (GM); LOOSE GM
- 24.3 / 103.1 MOIST, BROWN, GRAY, RED, AND ORANGE SILTY CLAY (CL); STIFF CL
- 32.0 / 95.4 MOIST, BROWN, GRAY, RED, AND ORANGE SILTY CLAY (CL); STIFF
- LITTLE TO SOME SAND WITH DEPTH (FINE GRAINED SAND LAYERS <0.1 FT. THICK AT DEPTHS OF 38.2, 38.4, 38.9, 39.6, 40.0 FT.) CL
- 43.0 / 84.4 MOIST, GRAY SILTY FINE GRAINED SAND (SM); MEDIUM DENSE SM
- 48.0 / 79.4 WET, GRAY CLAYEY MEDIUM/FINE-GRAINED SAND (SC); VERY DENSE SC
- 56.5 / 70.9 WET, GRAY AND BROWN CLAYEY SILT (ML); VERY STIFF ML
- BORING TERMINATED AT 60.0 FEET

REMARKS: CAVED AT 47.0 FT. AFTER AUGERS WERE REMOVED
24 HR. CAVED TO 26.0 FEET; WATER AT 21.0 FEET

PAGE 1 OF 1

Abut. A — PILE TIP

BS02 — ABUTMENT A

STATION: 181+59.23 OFFSET: 139.6 RT
SURFACE ELEVATION: 131.0 FT

DATE(S) DRILLED: 5/11/07
DRILLING METHOD(S): CONTINUOUS FLIGHT HSA - SPT
SPT METHOD:
OTHER TEST(S):
DRILLER: FROEHLING & ROBERTSON
LOGGER: SUE YOUNG

GROUND WATER
NOT ENCOUNTERED DURING DRILLING

FIELD DATA: SOIL (STANDARD PENETRATION TEST, HAMMER BLOWS, % SOIL RECOVERY, SAMPLE LEGEND, SAMPLE INTERVAL); ROCK (% CORE RECOVERY, ROCK QUALITY DESIGNATION, STRATA, JOINTS); DIP; STRATA LEGEND. LAB DATA: LIQUID LIMIT, PLASTICITY INDEX, MOISTURE CONTENT (%)

DESCRIPTION OF STRATA (LL, PI)

- 0.0 / 131.0 DAMP, BROWN AND TAN SAND, SILT, AND GRAVEL (FILL) FL
- 2.0 / 129.0 DAMP, BROWN SANDY CLAY (CL); VERY STIFF
- STIFF CL
- 5.0 / 126.0 MOIST, BROWN AND TAN SAND AND GRAVEL (GM); MEDIUM DENSE GM
- 6.0 / 125.0 DAMP TO MOIST, BROWN SILTY CLAY WITH TRACE FINE SAND (CL); VERY STIFF
- STIFF
- MOIST, FINE BROWN SAND LAYERS: APPROXIMATELY 6.9 TO 7.2, 9.6 TO 9.7, 9.9 TO 10.0 CL
- 13.0 / 118.0 DAMP TO SLIGHTLY MOIST, BROWN, TAN, AND RED SAND AND GRAVEL (GM); VERY DENSE
- WET, BROWN, TAN, AND RED GRAVEL; VERY DENSE GM
- 22.0 / 109.0 WET, BROWN AND GRAY CLAYEY SAND (SC); MEDIUM DENSE SC
- 32.0 / 99.0 MOIST, TAN FINE GRAINED SANDY CLAY (CL); VERY STIFF CL
- 36.0 / 95.0 MOIST, TANNISH GRAY CLAYEY FINE GRAINED SAND (SC); VERY DENSE SC
- 42.0 / 89.0 MOIST, TANNISH GRAY SILTY FINE GRAINED SAND (SM); DENSE SM
- 46.0 / 85.0 WET, BROWNISH GRAY FINE GRAINED SANDY SILT (ML); VERY STIFF ML
- 52.0 / 79.0 MOIST TO WET, TANNISH GRAY CLAYEY MEDIUM GRAINED SAND (SC); VERY DENSE SC
- 57.0 / 74.0 DAMP, BROWNISH GRAY FINE GRAINED SANDY SILT (ML); VERY STIFF ML
- BORING TERMINATED AT 60.0 FEET

REMARKS: MOVED 20 FT. BACK STATION; OFFSET DUE TO POWER LINE; LOCATION ON A SMALL KNOLL

PAGE 1 OF 1

Abut. A — PILE TIP

The subsurface information shown on the boring logs in these plans was solely obtained with reasonable care and recorded in good faith solely for use by the owner in establishing design controls for the project. The owner has no reason to suspect that such information is not reasonably accurate as an approximate indication of the subsurface conditions at the sites where the borings were taken. The owner does not in any way warrant or guarantee that such data can be projected as indicative of conditions beyond the limits of the borings shown; and any such projections by bidders are purely interpretive and altogether speculative. Further, the owner does not in any way guarantee, either expressly or by implication, the sufficiency of the information for bid purposes.

The boring logs are made available to bidders in order that they may have access to subsurface data identical to those which are possessed by the owner, and are not intended as a substitute for personal investigation, interpretation and judgment by the bidders.

Note: See Material and Sample Symbols List.

Legend:
- ▽ *Groundwater, Initially encountered*
- ▼ *Groundwater, stabilized*
- *RQD Rock Quality Designation*
- *15 21 25 SPT blow counts*

U.S. DEPARTMENT OF TRANSPORTATION
FEDERAL HIGHWAY ADMINISTRATION
EASTERN FEDERAL LANDS HIGHWAY DIVISION
STERLING, VIRGINIA

FORT BELVOIR - MULLIGAN ROAD
MULLIGAN ROAD OVER KINGMAN ROAD

ENGINEERING GEOLOGY

6/18/2008 3:07:27 PM C:\PwWorking\PITT\dms80930\R25_Geology1.dgn

REG	STATE	PROJECT	SHEET NO.
-	VA	VA-A-AD-48(1)	R26

ABUTMENT A

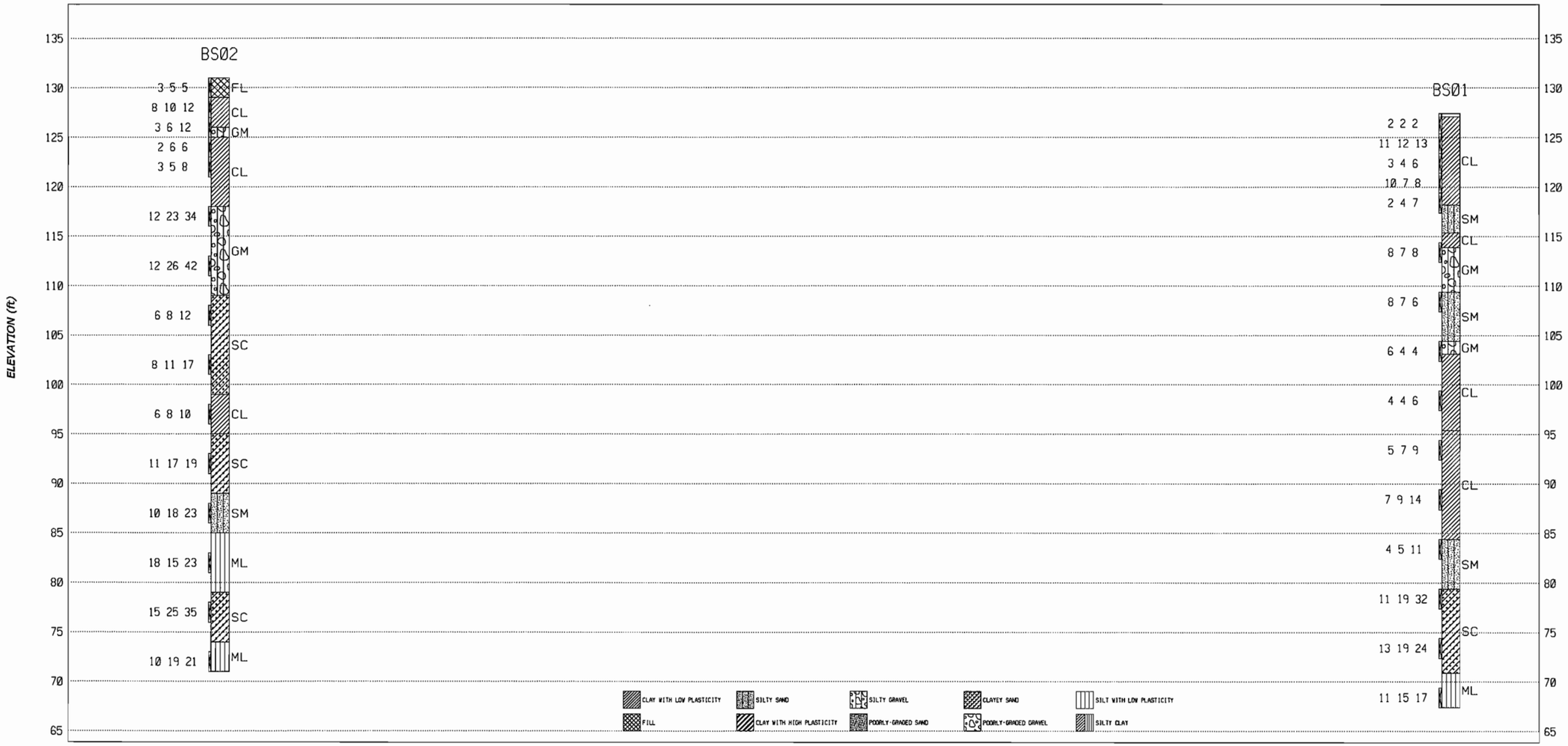

181+59.23
139.6 RT

181+61.91
99.7 RT

The subsurface information shown on the boring logs in these plans was solely obtained with reasonable care and recorded in good faith solely for use by the owner in establishing design controls for the project. The owner has no reason to suspect that such information is not reasonably accurate as an approximate indication of the subsurface conditions at the sites where the borings were taken. The owner does not in any way warrant or guarantee that such data can be projected as indicative of conditions beyond the limits of the borings shown; and any such projections by bidders are purely interpretive and altogether speculative. Further, the owner does not in any way guarantee, either expressly or by implication, the sufficiency of the information for bid purposes.

The boring logs are made available to bidders in order that they may have access to subsurface data identical to those which are possessed by the owner, and are not intended as a substitute for personal investigation, interpretation and judgment by the bidders.

Notes: See borehole logs for complete data.
See Material and Sample Symbols List.

Legend:
▽ Groundwater, initially encountered
▼ Groundwater, stabilized
RQD Rock Quality Designation
15 21 25 SPT blow counts

U.S. DEPARTMENT OF TRANSPORTATION
FEDERAL HIGHWAY ADMINISTRATION
EASTERN FEDERAL LANDS HIGHWAY DIVISION
STERLING, VIRGINIA

FORT BELVOIR - MULLIGAN ROAD
MULLIGAN ROAD OVER KINGMAN ROAD

ENGINEERING GEOLOGY

6/18/2008 3:07:54 PM C:\PwWorking\PITT\dms80930\R26_Geology2.dgn

REG	STATE	PROJECT	SHEET NO.
-	VA	VA-A-AD-48(1)	R27

BS03 — ABUTMENT B

STATION: 183+00.14 OFFSET: 104.2 RT
SURFACE ELEVATION: 125.2 FT

FIELD DATA

DATE(S) DRILLED: 5/11/07 - 5/14/07
DRILLING METHOD(S): CONTINUOUS FLIGHT HSA - SPT
SPT METHOD:
OTHER TEST(S):
DRILLER: FROEHLING & ROBERTSON
LOGGER: SUE YOUNG

GROUND WATER
NOT ENCOUNTERED DURING DRILLING

LAB DATA

DEPTH (FT)	ELEVATION (FT)	STANDARD PENETRATION TEST HAMMER BLOWS	% SOIL RECOVERY	SAMPLE LEGEND	SAMPLE INTERVAL	% CORE RECOVERY	ROCK QUALITY DESIGNATION (RQD)	STRATA DIP	JOINTS	STRATA LEGEND	DESCRIPTION OF STRATA	LIQUID LIMIT (LL)	PLASTICITY INDEX (PI)	MOISTURE CONTENT (%)
2					0						0.0 / 125.2 SEE LOG FOR B-26; BS-3 WAS DRILLED ADJACENT TO B-26, THEREFORE NO SAMPLING WAS CONDUCTED TO A DEPTH OF 18 FEET; DRILLING WAS PERFORMED BY HOLLOW-STEM AUGER.			
4					2									
6	120				4									
8					6									
10	115				8									
12					10									
14					13									
16	110				15									
18		2 3 6	100		18						18.0 / 107.2 DAMP, GRAY AND BROWN SILTY FAT CLAY (CH); VERY STIFF			
20	105				20									
22					23									
24		4 6 7	100		25						GRAY WITH BROWN GLOBULES			
26	100													
28		6 10 12	100		28									
30	95				30						DAMP TO MOIST, BLUE GRAY; VERY STIFF			
32														
34		4 10 14	100		33									
36	90				35						DAMP CH			
38		9 15 20	100		38						37.0 / 88.2 DAMP, BROWNISH GRAY FINE SAND (SM); MEDIUM DENSE TO DENSE SM			
40	85				40									
42														
44		10 14 19	100		43									
46	80				45						44.1 / 81.1 DAMP, GRAY AND RED MOTTLED CLAYEY SILT (ML); VERY STIFF			
48		6 12 17	100		48									
50	75				50						GRAY WITH RUST MOTTLES TRACE FINE GRAINED SAND ML			
52														
54		7 15 21	100		53									
56	70				55						54.4 / 70.8 MOIST, BROWNISH GRAY FINE GRAINED SANDY CLAY (CL); VERY STIFF CL			
58		14 20 31	100		58						57.0 / 68.2 MOIST, GRAY FINE GRAINED SAND (SP); VERY DENSE SP			
60					60						BORING TERMINATED AT 60.0 FEET			

REMARKS: CAVED AT 48.7 FT. AFTER AUGERS WERE REMOVED

PAGE 1 OF 1

Abut. B

PILE TIP

BS04 — ABUTMENT B

STATION: 183+08.59 OFFSET: 141.1 RT
SURFACE ELEVATION: 125.8 FT

FIELD DATA

DATE(S) DRILLED: 5/11/07 - 5/11/07
DRILLING METHOD(S): CONTINUOUS FLIGHT HSA - SPT
SPT METHOD:
OTHER TEST(S):
DRILLER: FROEHLING & ROBERTSON
LOGGER: SUE YOUNG

GROUND WATER
NOT ENCOUNTERED DURING DRILLING

LAB DATA

DEPTH (FT)	ELEVATION (FT)	STANDARD PENETRATION TEST HAMMER BLOWS	% SOIL RECOVERY	SAMPLE LEGEND	SAMPLE INTERVAL	% CORE RECOVERY	ROCK QUALITY DESIGNATION (RQD)	STRATA DIP	JOINTS	STRATA LEGEND	DESCRIPTION OF STRATA	LIQUID LIMIT (LL)	PLASTICITY INDEX (PI)	MOISTURE CONTENT (%)
2	125	1 2 6	60		0						0.0 / 125.8 DAMP, BROWN SILTY SAND (TOPSOIL)			
4		3 3 3	60		2						0.4 / 125.4 GRAVEL (QUARTZ FRAGMENTS)			
6	120	2 4 6	65		4						0.8 / 125.0 DRY, BROWN SILTY SAND (SM); MEDIUM DENSE SM			
8		6 12 15	65		6						2.0 / 123.8 MOIST, LIGHT BROWN FINE GRAINED SANDY SILT (ML); STIFF			
10	115	7 8 15	75		8						4.0 / 121.8 MOIST, ORANGEY BROWN SILTY FINE GRAINED SAND (SP); LOOSE SP			
12					10									
14		30 25 8	45		13						6.5 / 119.3 DAMP, GRAY GRAVEL (GP) GP			
16	110				15						7.0 / 118.8 MOIST, ORANGEY BROWN CLAYEY FINE GRAINED SAND (SC); MEDIUM DENSE SC			
18		4 6 9	80		18						9.2 / 116.6 MOIST, ORANGEY BROWN SILTY FINE SAND AND GRAVEL (GM); MEDIUM DENSE			
20	105				20									
22					23									
24		4 8 10	100		25						WET, TAN, BROWN, AND PINK COARSE SAND AND GRAVEL (GM); DENSE GM			
26	100													
28		7 10 15	100		28						13.5 / 112.3 MOIST, BROWN SILTY CLAY (CL); VERY STIFF			
30	95				30									
32														
34		8 14 18	90		33						BROWN AND GRAY CL			
36	90				35						22.0 / 103.8 MOIST, GRAY CLAY (CL); VERY STIFF CL			
38		13 14 30	100		38						27.0 / 98.8 MOIST, BROWN, GRAY, AND RED SILTY CLAY (CL-ML); VERY STIFF CL-ML			
40	85				40									
42														
44		13 19 25	100		43						33.4 / 92.4 MOIST, GRAY CLAYEY SAND (SC); MEDIUM DENSE SC			
46	80				45						36.0 / 89.8 DAMP, BROWN, BLACK, AND TAN FINE GRAINED SAND (SP); MEDIUM DENSE SP			
48		14 22 24	100		48						38.2 / 87.6 DAMP, BROWN AND GRAY SILTY SAND (SM); VERY DENSE SM			
50	75				50						41.0 / 84.8 DAMP, BROWN, RED, AND GRAY FINE GRAINED SANDY CLAY (CL); VERY STIFF CL			
52														
54		8 12 20	100		53						46.0 / 79.8 DAMP, BROWNISH GRAY SILTY CLAY, TRACE OF FINE SAND (CL); VERY STIFF			
56	70				55									
58		17 22 28	100		58									
60					60						FEW THIN SANDY LAYERS (<0.1 FT. THICK) CL 58.0 / 67.8 DAMP, GRAY FINE GRAINED SAND (SP); VERY DENSE SP BORING TERMINATED AT 60.0 FEET			

REMARKS: CAVED AT 56.5 FT. AFTER AUGERS WERE REMOVED
8 FT. UPSTREAM 3 FT. TO LEFT

PAGE 1 OF 1

Abut. B

PILE TIP

The subsurface information shown on the boring logs in these plans was solely obtained with reasonable care and recorded in good faith solely for use by the owner in establishing design controls for the project. The owner has no reason to suspect that such information is not reasonably accurate as an approximate indication of the subsurface conditions at the sites where the borings were taken. The owner does not in any way warrant or guarantee that such data can be projected as indicative of conditions beyond the limits of the borings shown; and any such projections by bidders are purely interpretive and altogether speculative. Further, the owner does not in any way guarantee, either expressly or by implication, the sufficiency of the information for bid purposes.

The boring logs are made available to bidders in order that they may have access to subsurface data identical to those which are possessed by the owner, and are not intended as a substitute for personal investigation, interpretation and judgment by the bidders.

Note: See Material and Sample Symbols List.

Legend:

- ▽ *Groundwater, initially encountered*
- ▼ *Groundwater, stabilized*
- *RQD Rock Quality Designation*
- *15 21 25 SPT blow counts*

U.S. DEPARTMENT OF TRANSPORTATION
FEDERAL HIGHWAY ADMINISTRATION
EASTERN FEDERAL LANDS HIGHWAY DIVISION
STERLING, VIRGINIA

FORT BELVOIR - MULLIGAN ROAD
MULLIGAN ROAD OVER KINGMAN ROAD

ENGINEERING GEOLOGY

6/18/2008 3:08:22 PM C:\PwWorking\PITT\dms80930\R27_Geology3.dgn

REG	STATE	PROJECT	SHEET NO.
-	VA	VA-A-AD-48(1)	R28

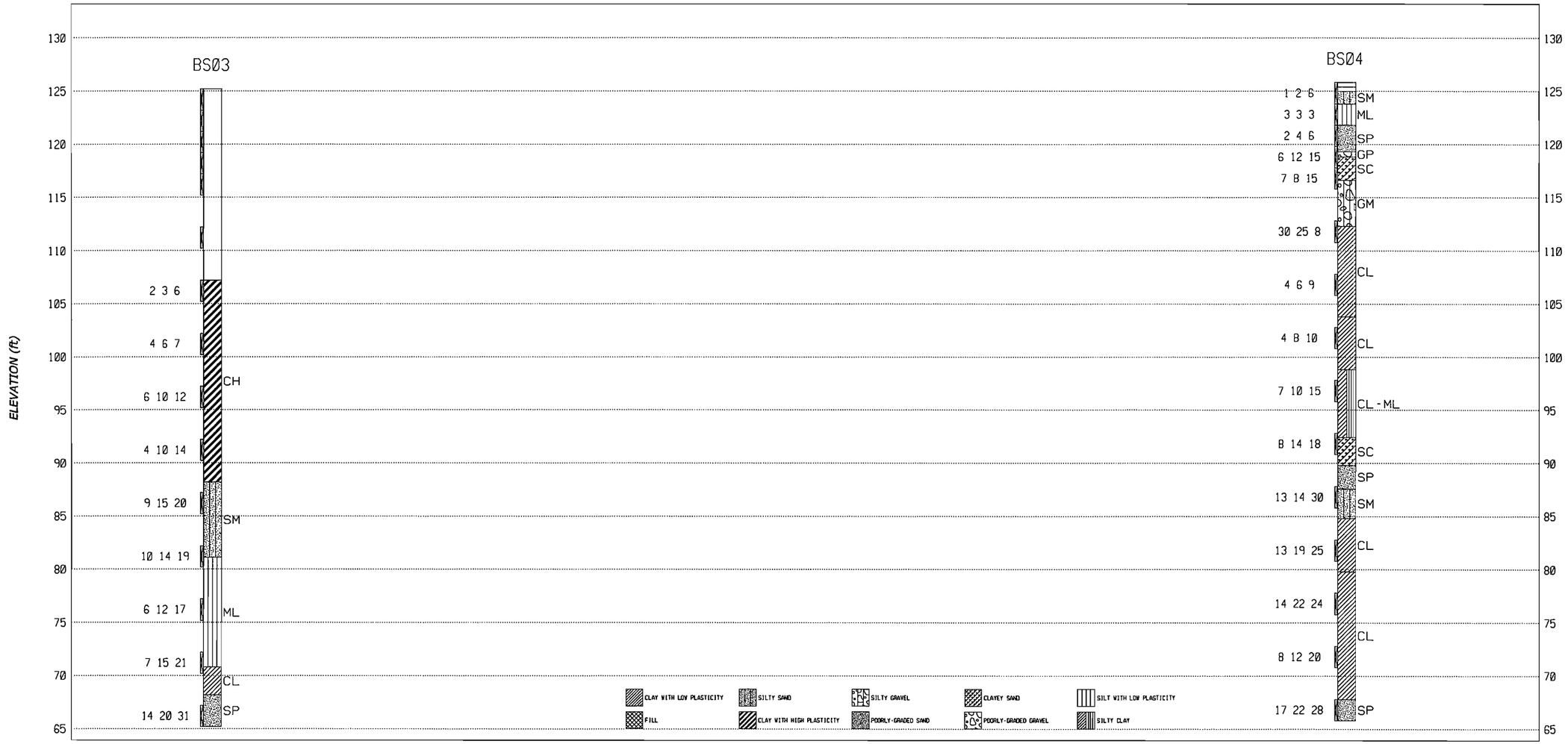

183+00.41
104.2 RT

183+08.59
141.1 RT

The subsurface information shown on the boring logs in these plans was solely obtained with reasonable care and recorded in good faith solely for use by the owner in establishing design controls for the project. The owner has no reason to suspect that such information is not reasonably accurate as an approximate indication of the subsurface conditions at the sites where the borings were taken. The owner does not in any way warrant or guarantee that such data can be projected as indicative of conditions beyond the limits of the borings shown; and any such projections by bidders are purely interpretive and altogether speculative. Further, the owner does not in any way guarantee, either expressly or by implication, the sufficiency of the information for bid purposes.

The boring logs are made available to bidders in order that they may have access to subsurface data identical to those which are possessed by the owner, and are not intended as a substitute for personal investigation, interpretation and judgment by the bidders.

Notes: *See borehole logs for complete data.*
See Material and Sample Symbols List.

Legend:

▽	*Groundwater, initially encountered*
▼	*Groundwater, stabilized*
REC	*Recovery*
RQD	*Rock Quality Designation*
15 21 25	*SPT blow counts*

U.S. DEPARTMENT OF TRANSPORTATION
FEDERAL HIGHWAY ADMINISTRATION
EASTERN FEDERAL LANDS HIGHWAY DIVISION
STERLING, VIRGINIA

FORT BELVOIR - MULLIGAN ROAD
MULLIGAN ROAD OVER KINGMAN ROAD

ENGINEERING GEOLOGY

6/18/2008 3:08:47 PM C:\PwWorking\PITT\dms80930\R28_Geology4.dgn

REG	STATE	PROJECT	SHEET NO.
-	VA	VA-A-AD-48(1)	R29

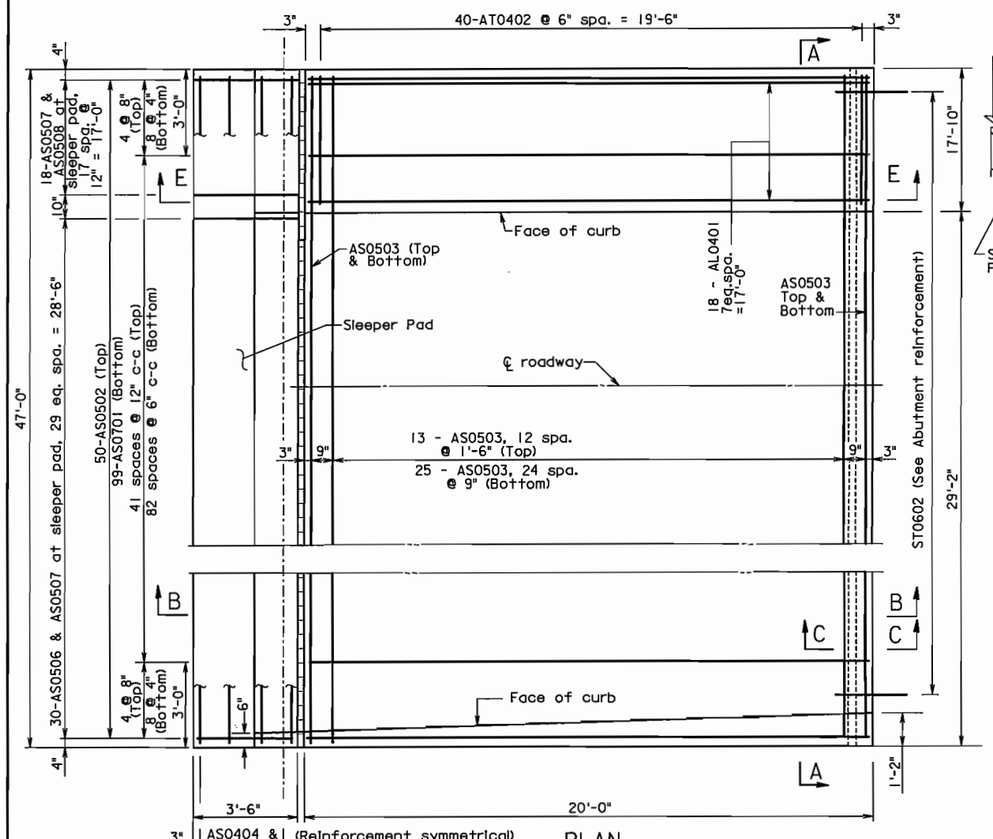

PLAN
Scale: 3/8" = 1'-0"

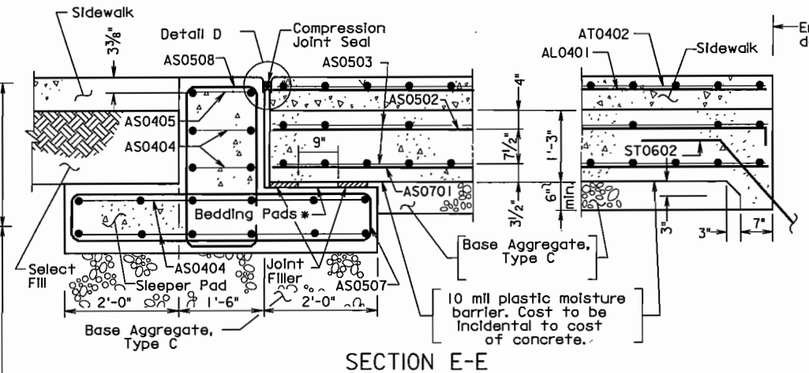

SECTION E-E
Scale: 3/4" = 1'-0"

Notes:

Capacity: HL-93 loading.

All joints that are to be sealed shall be free of cracked and spalled areas and their faces shall be free of all foreign matter, curing compound, oils, greases and dirt. All faces must be sandblasted or brushed with a mechanical rotary wire brush. Just prior to sealing, the joint shall be blown out with oil-free compressed air.

Deformed reinforcing bars shall conform to ASTM A615, Grade 60. All reinforcing bar dimensions except for bending diagram are to centers of bars.

The cost for the aggregate material below the approach slab will be included in the price bid for concrete for the approach slab and no additional compensation will be allowed.

Prime aggregate base material with 0.35 gal. per sq. yd. Liquid Asphalt Material Type RC-70, RC-250 or MC-250 if aggregate base is exposed for more than 2 weeks.

REINFORCING STEEL SCHEDULE

Mark	No.	Length	Pin ø	Location
AS0701	99	19'-8"	—	Bottom longitudinal
AS0502	50	20'-5"	3 3/4	Top longitudinal
AS0503	42	46'-8"	—	Top & bottom transverse
AS0404	16	46'-8"	—	Sleeper pad longitudinal
AS0405	2	17'-4"	—	Sleeper pad longitudinal
AS0506	30	6'-8"	2 1/2	Sleeper pad transverse
AS0507	48	12'-0"	2 1/2	Sleeper pad transverse
AS0508	18	8'-2 1/2"	2 1/2	Sleeper pad transverse
AS0401	18	19'-8"	—	Sidewalk
AS0402	40	18'- 1"	2 1/4	Sidewalk

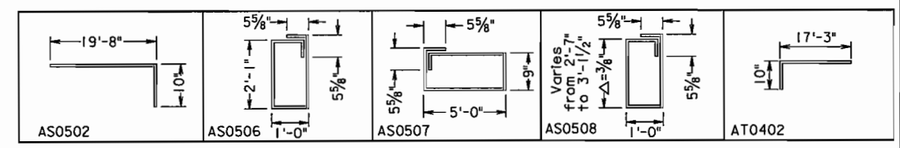

NOTE: Number of bars shown is for one approach slab and one sleeper pad.

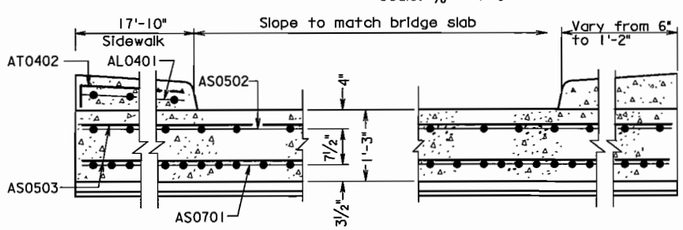

SECTION A-A
Scale: 3/4" = 1'-0"

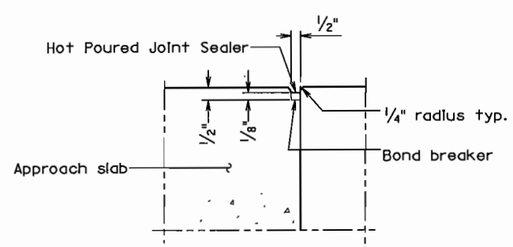

SECTION C-C
Scale: 3" = 1'-0"

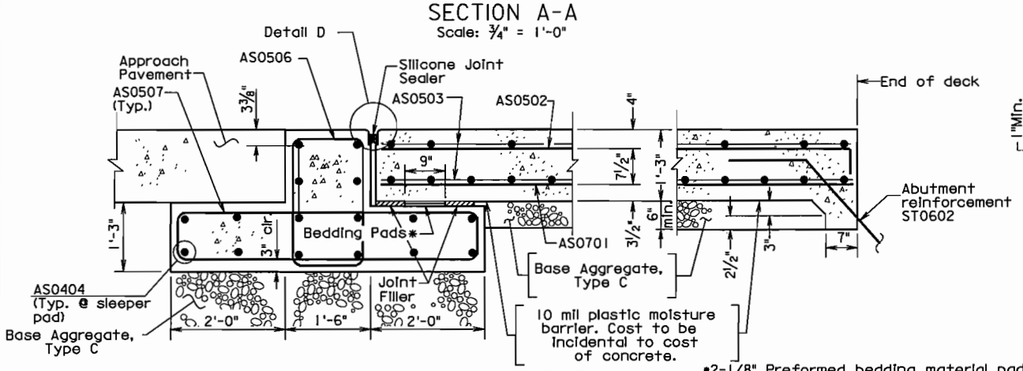

SECTION B-B
Scale: 3/4" = 1'-0"

*2-1/8" Preformed bedding material pads conforming to Sec. 564 full length of approach slab seat. Between the pads use either a powdered graphite lubricant or Molykote 321 by Dow Corning or Mantek Dri-guard.

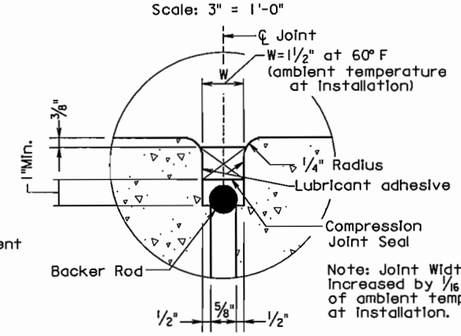

DETAIL D
Not to Scale

Note: Joint Width W shall be increased by 1/16" for every 10° F of ambient temperature difference at installation.

ESTIMATED QUANTITIES**

	Structural Concrete, Class D(AE)for App.slabs,Type I	Reinforcing Steel
Units	SQYD	LB
Abut.A	112.5	9,300
Abut.B	112.5	9,300
Totals	225.0	18,600

- Cost for base aggregate Type C is incidental to cost of concrete.
- ** These quantities are for information only.See sheet R2 for Pay Item etc.

U.S. DEPARTMENT OF TRANSPORTATION
FEDERAL HIGHWAY ADMINISTRATION
EASTERN FEDERAL LANDS HIGHWAY DIVISION
STERLING, VIRGINIA

FORT BELVOIR - MULLIGAN ROAD
MULLIGAN ROAD OVER KINGMAN ROAD

APPROACH SLABS - SBL

DET. E552-A

6/19/2008 11:46:41 AM C:\PWworking\PITT\dms80930\BAS - SBL.dgn

REG	STATE	PROJECT	SHEET NO.
-	VA	VA-A-AD-48(1)	R30

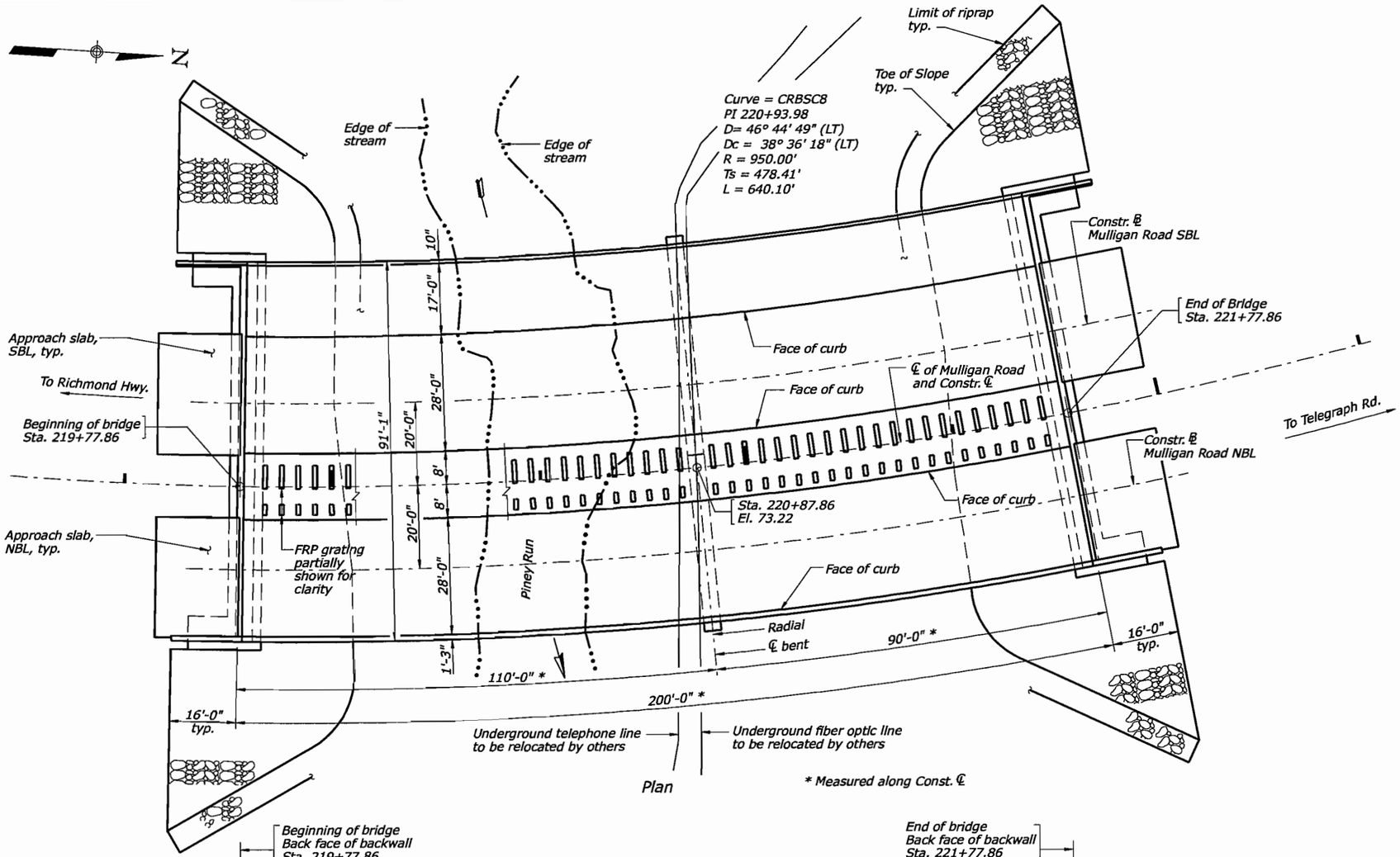

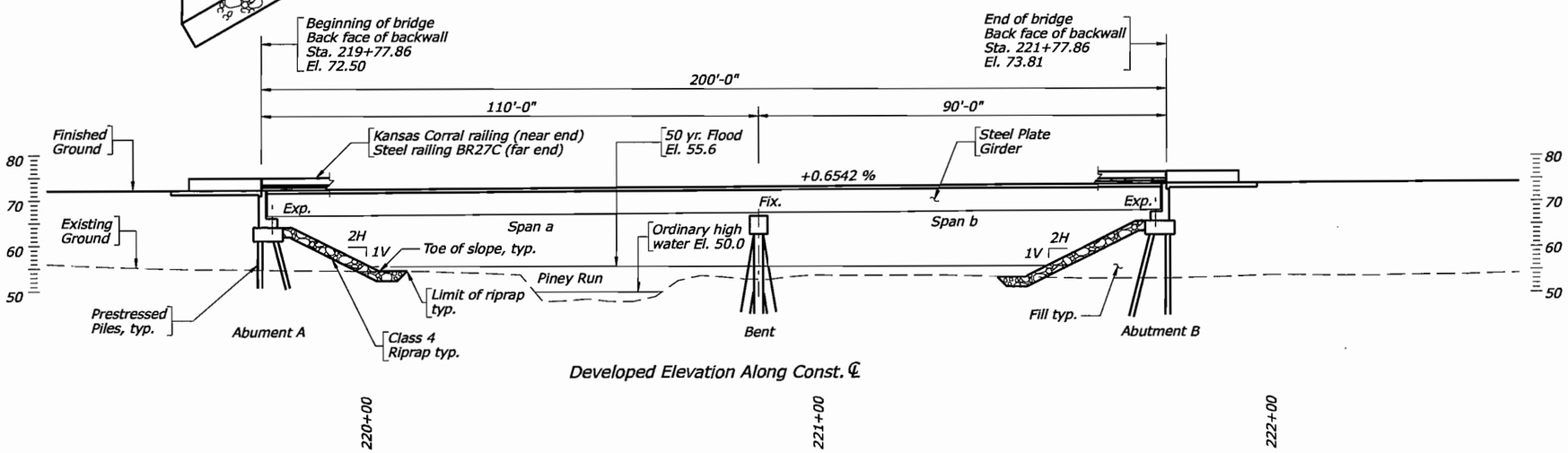

Developed Elevation Along Const. ℄

General notes:

Width: 91'-1" out -to-out.

Span Layout: 2 span 110'-90' continuous steel plate girder spans.

Capacity: HL-93 loading.

Drainage Area: 2.10 square miles

Specifications: Construction: Standard Specifications for Construction of Roads and Bridges on Federal Highway Projects, FP-03

Design: AASHTO LRFD Bridge Design Specifications 4th. Edition, 2007 and VDOT Modifications.

These plans are incomplete unless accompanied by SCR (Special Contract Requirements) included in contract documents.

Design loading includes 20 psf allowance for construction tolerances and construction methods.

The use of prestressed deck panels as stay-in place forms will not be permitted.

All structural steel, except in bearings and sole plates, shall be ASTM A709 grade 50W and shall be unpainted except as required by FHWA FP-03 specifications. Structural steel in bearings and sole plates shall be ASTM A709 Grade 36 and shall be painted. Finish paint color shall be brown, 595-20059. Structural steel including cross frames under median openings shall be painted.

Girders shall be curved by cutting the flanges to proper curvature or by heat curving.

Concrete in prestressed piles shall be Class P (f'c=5000 psi). Concrete in bridge deck, parapets, terminal walls, sidewalks and median shall be HPC (f'c=4000 psi), abutments and bent caps, class A(AE) (f'c=4000 psi), approach slabs, class D(AE), (f'c = 4000 psi).

Deformed reinforcing bars shall conform to ASTM A615, Grade 60. All Reinforcements in superstructure shall be Epoxy Coated.

18" piles at Abutments have ultimate axial capacity of 271 tons, with a safety factor of 2.25; 24" piles at bent have ultimate axial capacity of 278 tons, with a safety factor of 2.25. 18" cast-in-place piles with conical point at the end may be substituted for 18" prestressed concrete piles at no additional cost.

BM: B&N Tablet stamped "3000" located on the north side of John Kingman Road, 330.55 ft East of Connector Road N 6952665.8919, E 11871044.5308, El. 121.19.

PROJECT DATA:	
Bridge Name:	Mulligan Road over Piney Run
Stream:	Piney Run
Project Location:	Fairfax County, Virgina
Owner:	VDOT

HYDRAULIC DATA:

Year	Discharge (CF / Sec.)	Water Elev. (Ft.)	Velocities (Ft. / Sec.)
2	590	52.7	3.9
10	1140	54.3	5.6
50	2100	55.6	6.9
100	2570	56.2	7.3
500	4400	57.5	8.2

0 15 30
SCALE IN FEET

U.S. DEPARTMENT OF TRANSPORTATION
FEDERAL HIGHWAY ADMINISTRATION
EASTERN FEDERAL LANDS HIGHWAY DIVISION
STERLING, VIRGINIA

FORT BELVOIR - MULLIGAN ROAD
MULLIGAN ROAD OVER PINEY RUN

PLAN AND ELEVATION GENERAL NOTES

6/19/2008 10:45:29 AM C:\PWworking\PITT\dms96\JN\front sheet.dgn

REG	STATE	PROJECT	SHEET NO.
-	VA	VA-A-AD-48(1)	R31

ESTIMATED QUANTITIES - SUBSTRUCTURE ONLY

		Pay Item 20410-0000	Pay Item 20701-1400	Pay Item 20801-0000	Pay Item 20803-0000	Pay Item 25102-3000	Pay Item 55101-0800	Pay Item 55101-1000	Pay Item 55104-1000	Pay Item 55120-0000	Pay Item 55201-0200	Pay Item 55401-1000	Pay Item 55401-2000
		Select Borrow ⊗	Earthwork Geotextile, Type IV-C	Structure Excavation ⊗	Structural Backfill ⊗	Placed Riprap, Class 4	Precast, Prestressed Concrete Piles 18"x18", In place	Precast, Prestressed Concrete Piles 24"x24", In place	Dynamic Pile Load Test	Test Piles	Structural Concrete, Class A(AE)	Reinforcing Steel	Reinforcing Steel Epoxy Coated
Units		CUYD	SQYD	CUYD	CUYD	TON	LNFT	LNFT	Each	LNFT	CUYD	LB	LB
Abutment A	Footing	23	659	143	216	952	2790	——	1	100	104.4	7360	——
	Neat	——	——	——	——	——	——	——	——	——	91.3	——	5080
Bent	Footing	——	——	——	——	——	——	1710	1	100	——	——	——
	Neat	——	——	——	——	——	——	——	——	——	56.3	10,600	——
Abutment B	Footing	23	690	143	216	996	2790	——	1	100	104.4	7360	——
	Neat	——	——	——	——	——	——	——	——	——	91.3	——	5080
Total		46	1349	286	432	1948	5580	1710	3	300	447.7	25,320	10,160

⊗ Denotes items to be paid for on the basis of plan quantities in accordance with FP-03 and current SCR.

ESTIMATED QUANTITIES - SUPERSTRUCTURE ONLY

	Pay Item 55201-1100	Pay Item 55401-2000	Pay Item 55502-0000	Pay Item 55601-0500	Pay Item 55601-1200	Pay Item 56401-1000
	Structural Concrete Class HPC	Reinforcing Steel, Epoxy Coated	Structural Steel, furnished, fabricated and erected	Bridge Railing, Concrete ⊗	Bridge Railing, Steel, Three Rail ⊗	Bearing Device, Elastomeric
Units	CUYD	LB	LB	LNFT	LNFT	EACH
Quantity	655.2	179,940	441,600	242	223	27

⊗ Denotes items to be paid for on the basis of plan quantities in accordance with FP-03 and current SCR.

Cost of bridge expansion joints is included in the price bid of Structural Steel.

Approach Slab Quantities

	Pay Item 55202-1000 ⊗	Pay Item 55401-1000 ⊗
	Structural Concrete, Class D (AE) for Approach Slabs, Type 1	Reinforcing Steel
Units	SQYD	LB
Quantity	258	17,800

⊗ Denotes items to be paid for on the basis of plan quantities in accordance with FP-03 and current SCR.

INDEX OF SHEETS

Sheet No.	Description
R30	Plan and Elevation, General Notes
R31	Estimated Quantities, Index Of Sheets and Slope Protection
R32	Substructure Layout
R33	Abutment Footing Plan
R34	Abutment Plan and Elevation (Sheet 1 of 2)
R35	Abutment Plan and Elevation (Sheet 2 of 2)
R36	Abutment Sections, Wingwalls
R37	Abutment Details
R38	Bent Plan and Elevation (Sheet 1 of 2)
R39	Bent Plan and Elevation (Sheet 1 of 2)
R40	Bent Details
R41	Bearing Details
R42	Transverse Section
R43	Transverse Section Details (Sheet 1 of 2)
R44	Transverse Section Details (Sheet 2 of 2)
R45	Median Plan
R46	Framing Plan
R47	Girder Elevation
R48	Dead Load Deflections and Slab Elevations
R49	Camber Diagram
R50	Bolted Splice Details and Cross Frame Details
R51	Deck Plan
R52	Deck Slab Elevations
R53	Elastomeric Expansion Dam
R54	Steel Railing BR27C (Sheet 1 of 2)
R55	Steel Railing BR27C (Sheet 2 of 2)
R56	Cast-In-Place Concrete Railing (32" Kansas Corral)
R57	Prestressed Concrete Piles, Square 10" Thru 24"
R58	Reinforcing Steel Schedule
R59	Reinforcing Steel Schedule
R60	Engineering Geology
R61	Engineering Geology
R62	Engineering Geology
R63	Engineering Geology
R64	Engineering Geology
R65	Engineering Geology
R66	Approach Slabs SBL
R67	Approach Slabs NBL

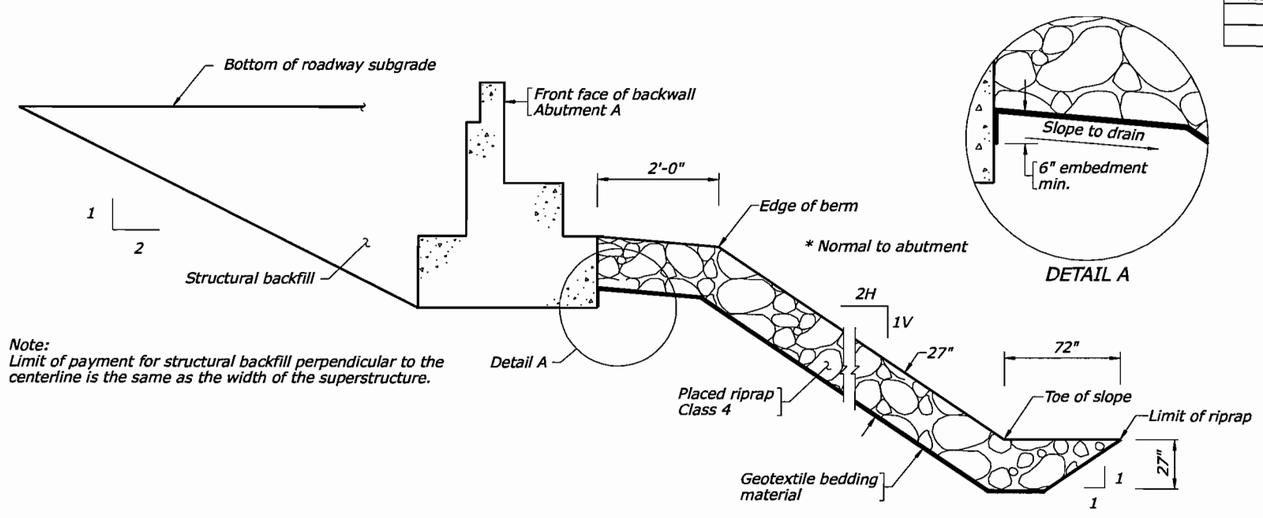

Note:
Limit of payment for structural backfill perpendicular to the centerline is the same as the width of the superstructure.

Slope Protection
Not to scale

Rev. No.	Sheets Revised	Date

TABLE OF REVISIONS

U.S. DEPARTMENT OF TRANSPORTATION
FEDERAL HIGHWAY ADMINISTRATION
EASTERN FEDERAL LANDS HIGHWAY DIVISION
STERLING, VIRGINIA

FORT BELVOIR - MULLIGAN ROAD
MULLIGAN ROAD OVER PINEY RUN

ESTIMATED QUANTITIES, INDEX OF SHEETS AND SLOPE PROTECTION

6/18/2008 2:35:33 PM C:\PwWorking\PITT\dms9613\quantity.dgn

REG	STATE	PROJECT	SHEET NO.
-	VA	VA-A-AD-48(1)	R32

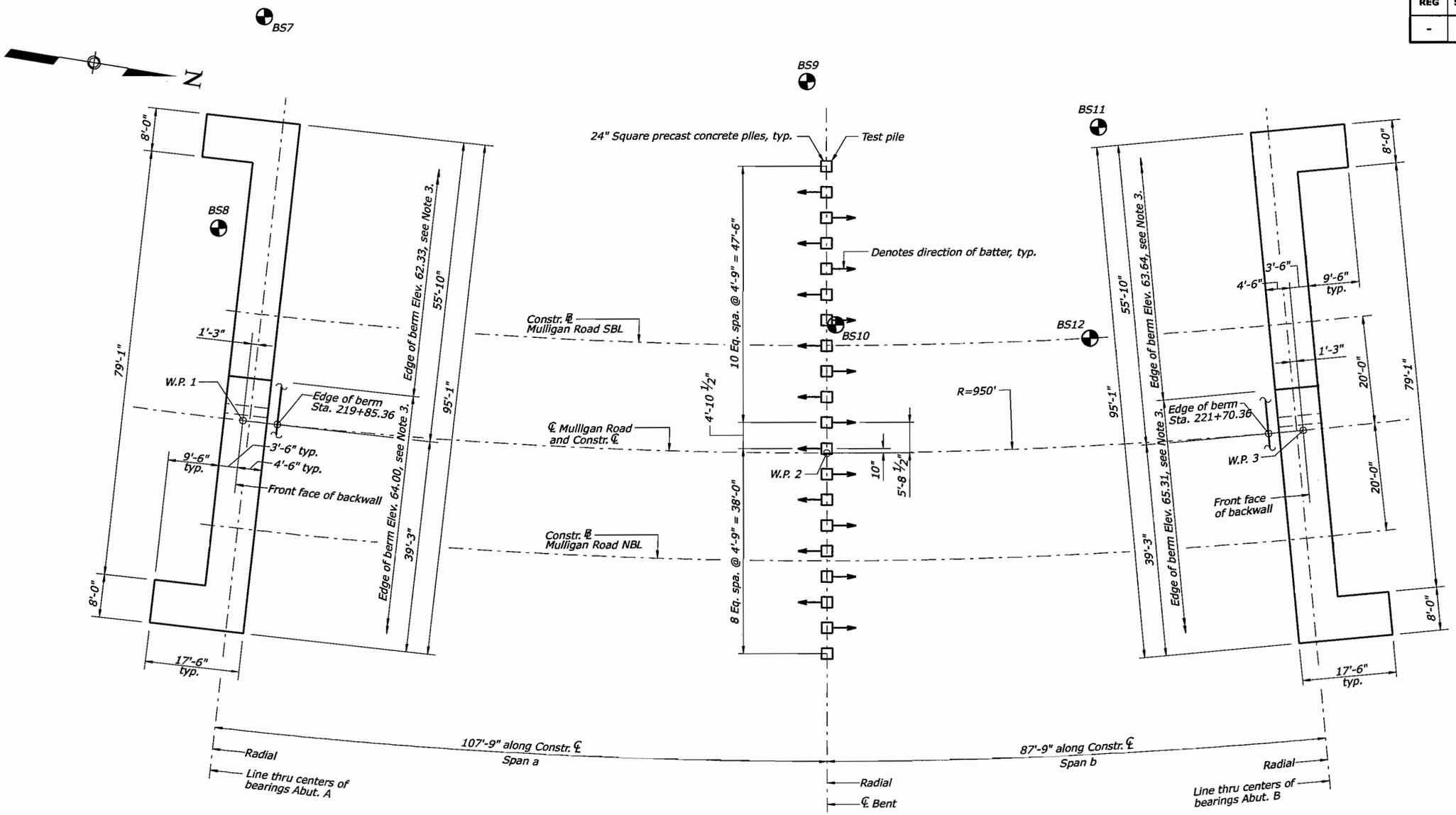

Substructure Layout

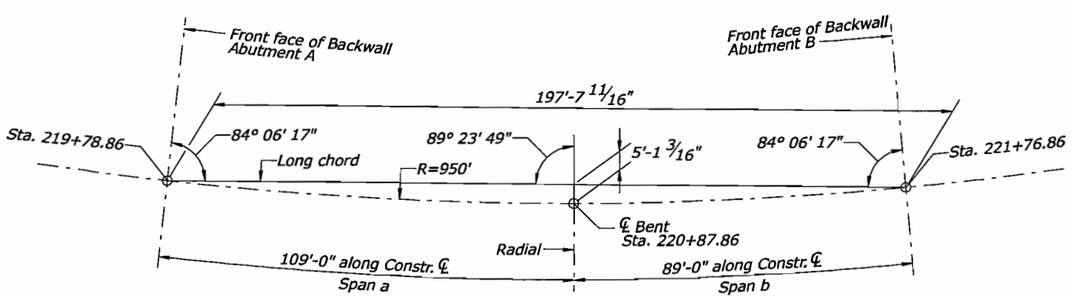

Bridge Layout
Not to scale

WORKING POINT (W.P.) LOCATION		
W.P. NO.	STATION	OFFSET
W.P. 1	219+78.86	0
W.P. 2	220+87.86	0
W.P. 3	221+76.86	0

BORING LOCATION		
BORING	STATION	OFFSET
BS7	219+74	75 LT.
BS8	219+70	35 LT.
BS9	220+84	69 LT.
BS10	220+90	24 LT.
BS11	221+42	59 LT.
BS12	221+38	20 LT.

Notes:

1. This layout is to be used only for the purpose of locating fill slopes and footings of abutments and bents. For details of neatwork, see Abutment details.
2. For Abutment details, see sheets R33 to R37.
3. Edge of berm elevation following the step footing shall have a transition slope of 1:1.

0 10 20
SCALE IN FEET

U.S. DEPARTMENT OF TRANSPORTATION
FEDERAL HIGHWAY ADMINISTRATION
EASTERN FEDERAL LANDS HIGHWAY DIVISION
STERLING, VIRGINIA

FORT BELVOIR - MULLIGAN ROAD
MULLIGAN ROAD OVER PINEY RUN

SUBSTRUCTURE LAYOUT

6/18/2008 2:40:18 PM C:\PwWorking\PITT\dms95151\Substructure.dgn

REG	STATE	PROJECT	SHEET NO.
-	VA	VA-A-AD-48(1)	R33

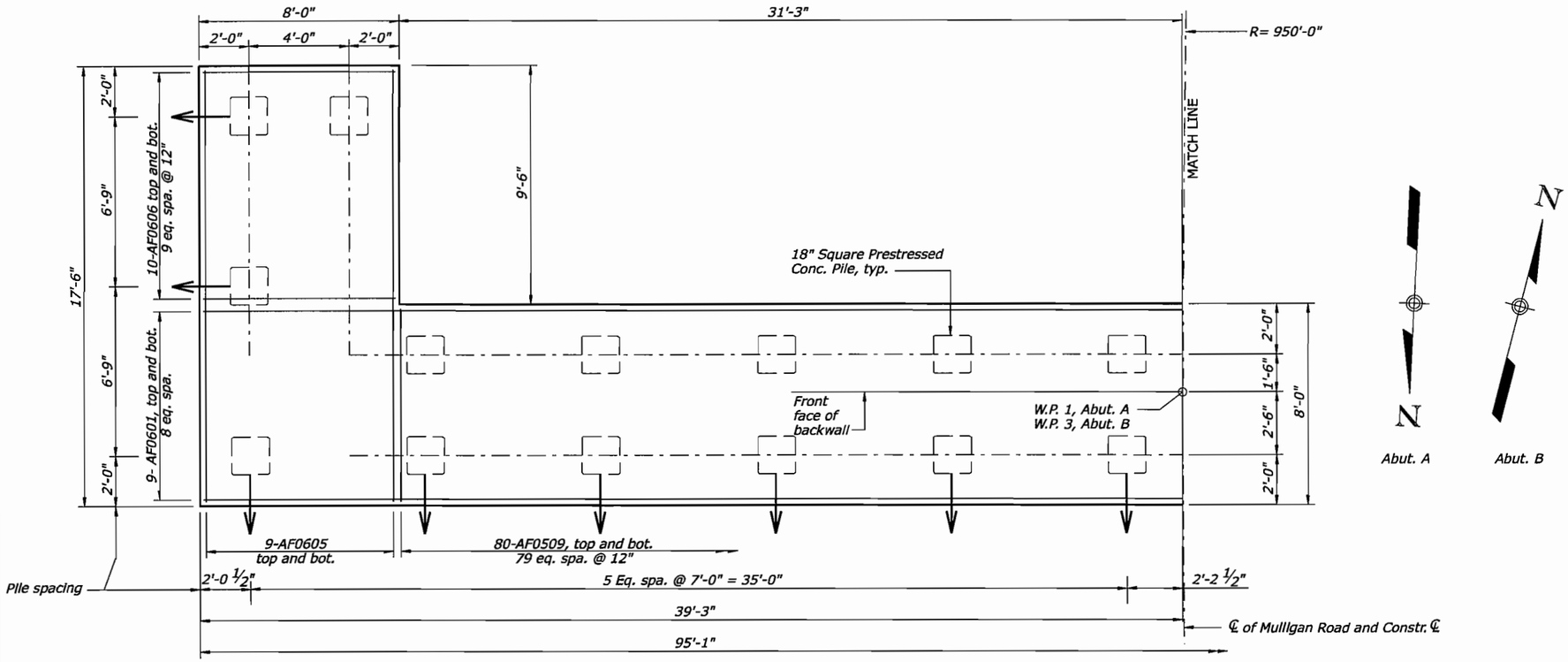

Notes:

Denotes battered pile.

Denotes test pile.

Abutment A shown. Abutment B opposite hand.

For abbreviations, see sheet R35.

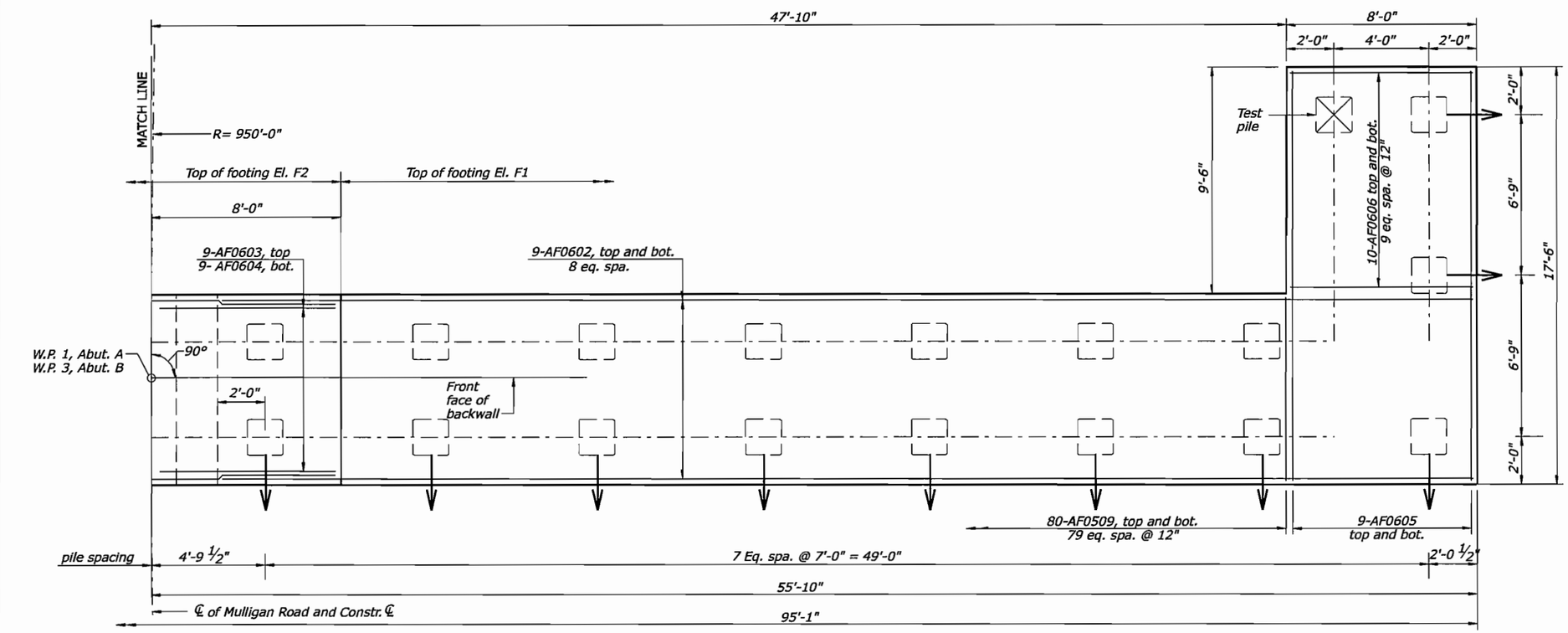

Abutment Footing Plan

0 2.6667 5.3333
SCALE IN FEET

U.S. DEPARTMENT OF TRANSPORTATION
FEDERAL HIGHWAY ADMINISTRATION
EASTERN FEDERAL LANDS HIGHWAY DIVISION
STERLING, VIRGINIA

FORT BELVOIR - MULLIGAN ROAD
MULLIGAN ROAD OVER PINEY RUN

ABUTMENT FOOTING PLAN

6/18/2008 11:51:55 AM C:\PwWorking\PITT\dms96135\Abut_A_Fig.dgn

REG	STATE	PROJECT	SHEET NO.
-	VA	VA-A-AD-48(1)	R34

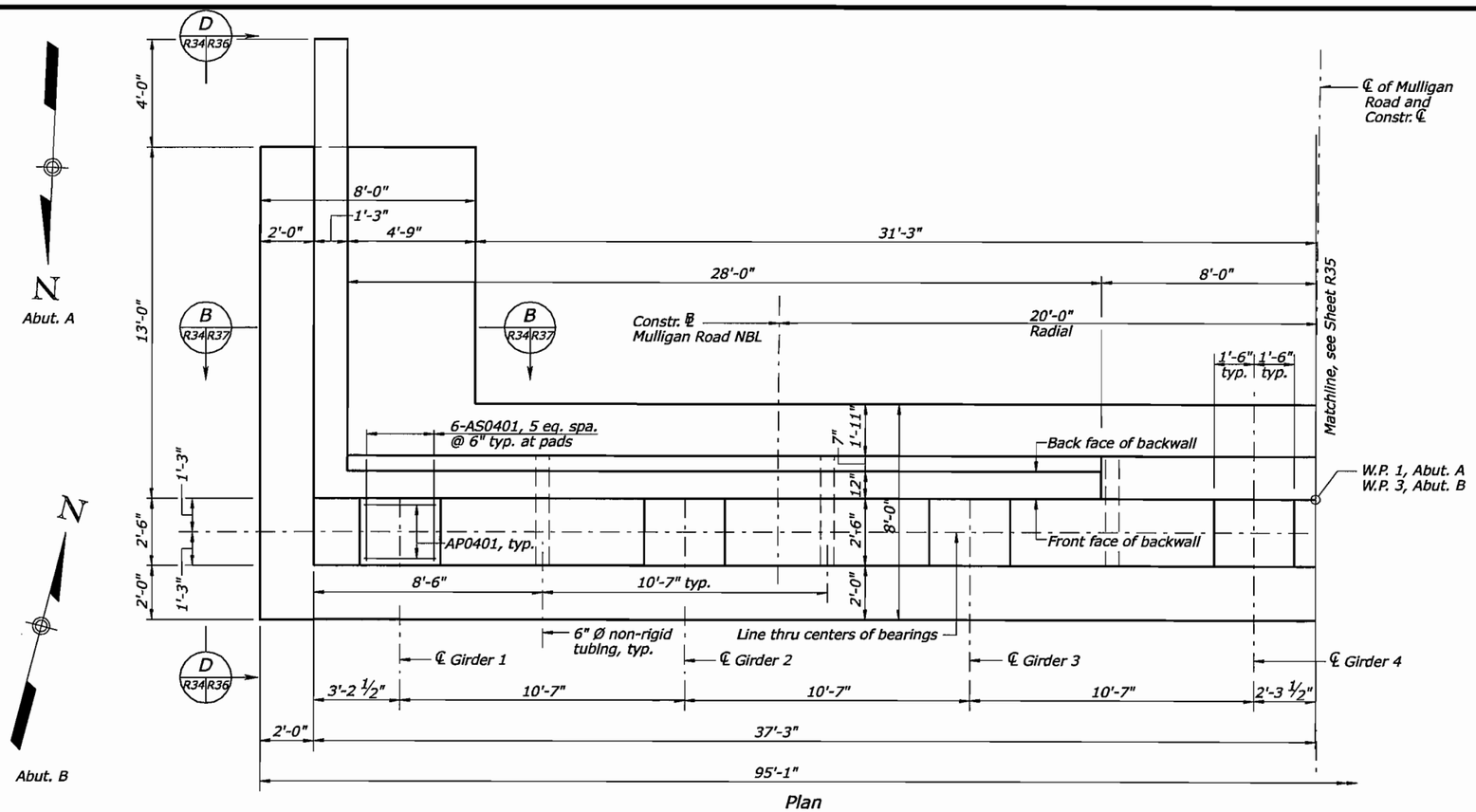

Plan

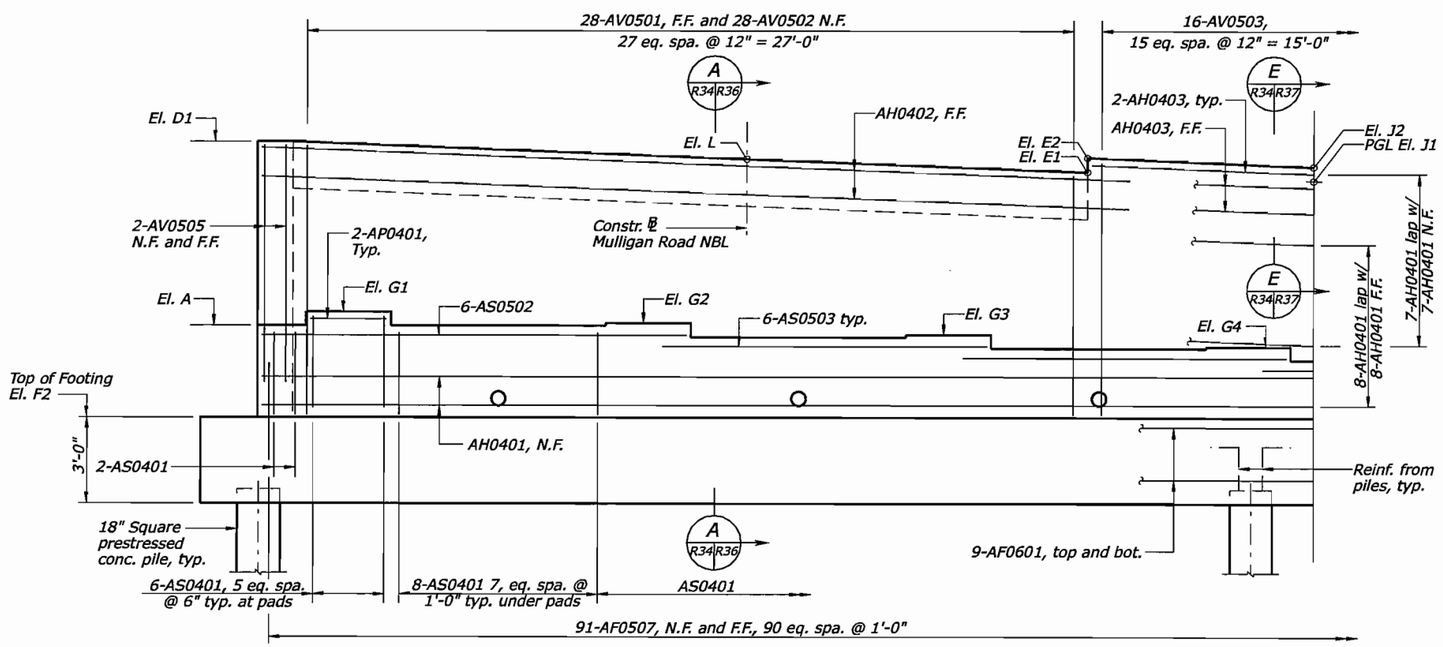

Elevation

Notes:

1. Abutment A shown. Abutment B opposite hand.
2. For working point stations, see Substructure Layout.
3. The Contractor shall adjust reinforcing steel to clear anchor bolts.
4. The abutment seat elevations were determined based on the bearing heights shown on the bearing sheet. If different bearing heights are used the Contractor shall adjust the seat elevations.
5. Estimated pile tip elevation is -29.7 for Abutment A and -28.4 for Abutment B.
6. For abbreviations, see sheet R35.

Elevations

Point	A	B	C1	C2	D1	D2	L	M
Abut. A	67.36	64.57	71.80	71.69	73.87	73.76	73.26	71.74
Abut. B	68.68	65.88	73.10	73.21	75.17	75.28	74.56	73.04

Point	E1	E2	F1	F2	J1	J2	H1	H2	K1	K2
Abut. A	72.81	73.31	62.50	64.17	72.50	73.00	72.20	72.70	71.14	71.64
Abut. B	74.10	74.60	63.81	65.48	73.80	74.30	73.50	74.00	72.43	72.93

Note: Elevations are at face of backwalls.

Point	G1	G2	G3	G4	G5	G6	G7	G8	G9
Abut. A	67.85	67.45	67.04	66.64	66.26	65.86	65.46	65.05	64.65
Abut. B	69.17	68.77	68.36	67.96	67.57	67.17	66.77	66.36	65.96

Note: Elevations are at centerlines of bearings.

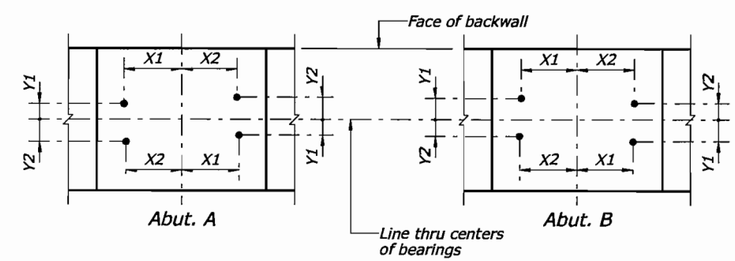

Anchor Bolt Layout
Not to scale

	X1	X2	Y1	Y2
Abut. A	12 3/16"	11 3/4"	3 5/16"	4 11/16"
Abut. B	11 13/16"	12 3/16"	4 9/16"	3 7/16"

0 2.6667 5.3333
SCALE IN FEET

U.S. DEPARTMENT OF TRANSPORTATION
FEDERAL HIGHWAY ADMINISTRATION
EASTERN FEDERAL LANDS HIGHWAY DIVISION
STERLING, VIRGINIA

FORT BELVOIR - MULLIGAN ROAD
MULLIGAN ROAD OVER PINEY RUN

ABUTMENT PLAN AND ELEVATION

Sheet 1 of 2

6/18/2008 11:49:9 AM C:\PwWorking\PITT\dms96135\Abut_A.dgn

REG	STATE	PROJECT	SHEET NO.
-	VA	VA-A-AD-48(1)	R35

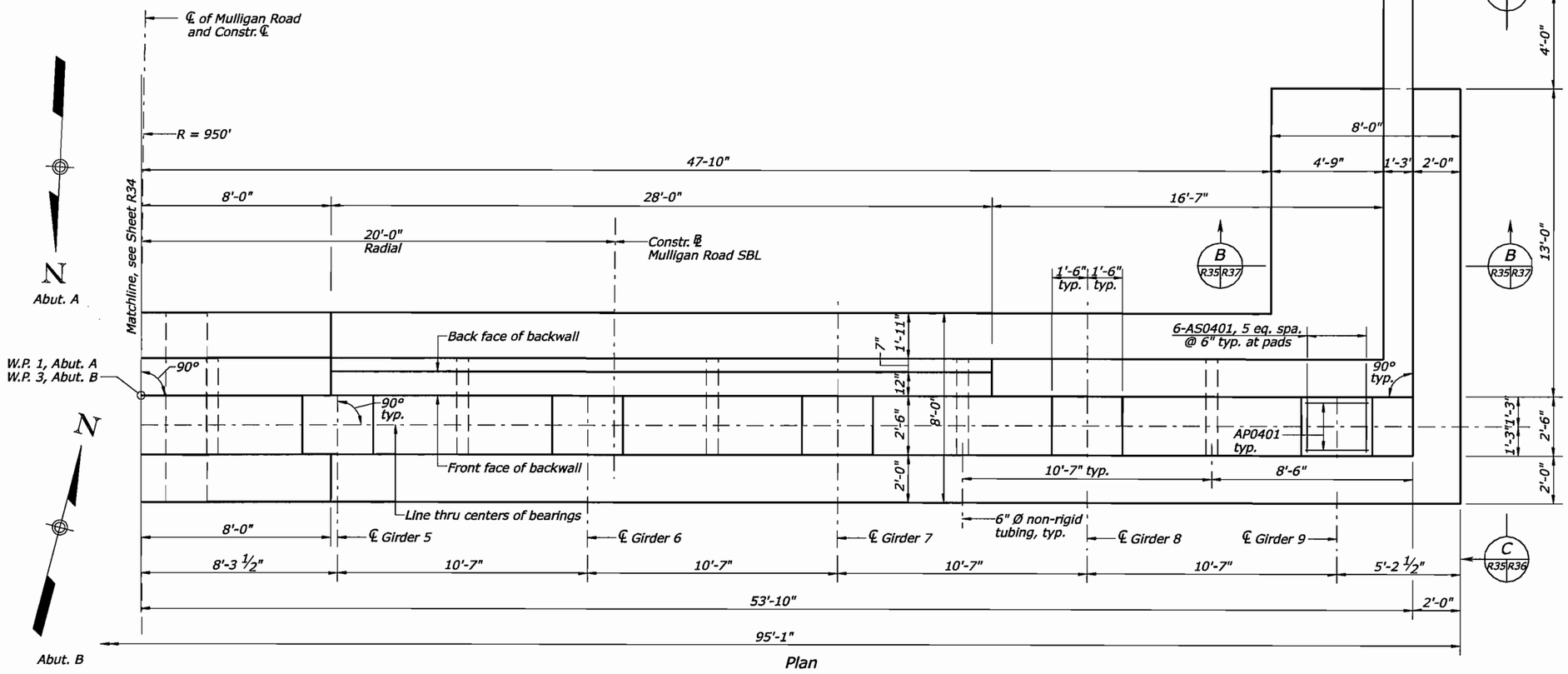

Note:

1. Abutment A shown. Abutment B opposite hand.
2. For anchor bolt layout, see sheet R34.
3. Abbreviations:

N.F.	Near face
F.F.	Far face
E.F.	Each face
El.	Elevation
typ.	Typical
min.	Minimum
max.	Maximum
bott.	Bottom
eq.	Equal
spa.	Spacing
Constr.	Construction
conc.	concrete
reinf.	reinforcement
embed.	embedment
brg.	bearing
W.P.	Working point
w/	with

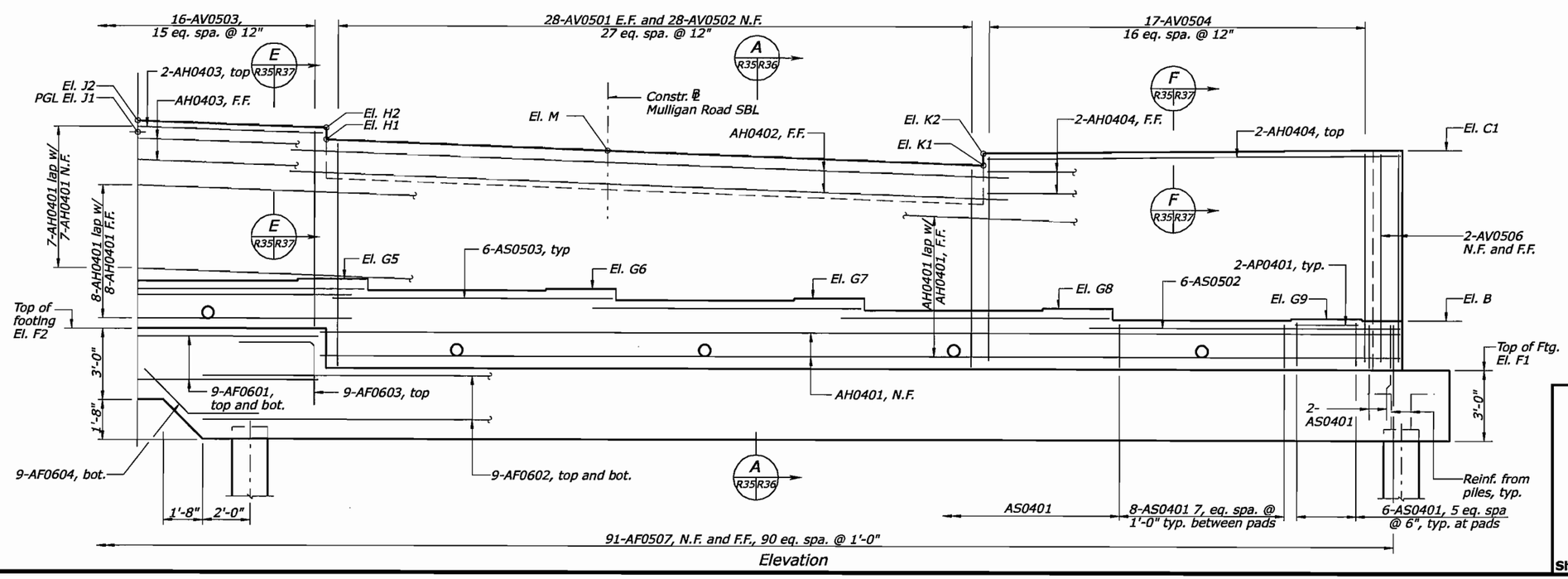

0 2.6667 5.3333
SCALE IN FEET

U.S. DEPARTMENT OF TRANSPORTATION
FEDERAL HIGHWAY ADMINISTRATION
EASTERN FEDERAL LANDS HIGHWAY DIVISION
STERLING, VIRGINIA

FORT BELVOIR - MULLIGAN ROAD
MULLIGAN ROAD OVER PINEY RUN

ABUTMENT PLAN AND ELEVATION

Sheet 2 of 2

6/18/2008 11:50:39 AM C:\PwWorking\PITT\dms9613\Abut_A2.dgn

REG	STATE	PROJECT	SHEET NO.
-	VA	VA-A-AD-48(1)	R36

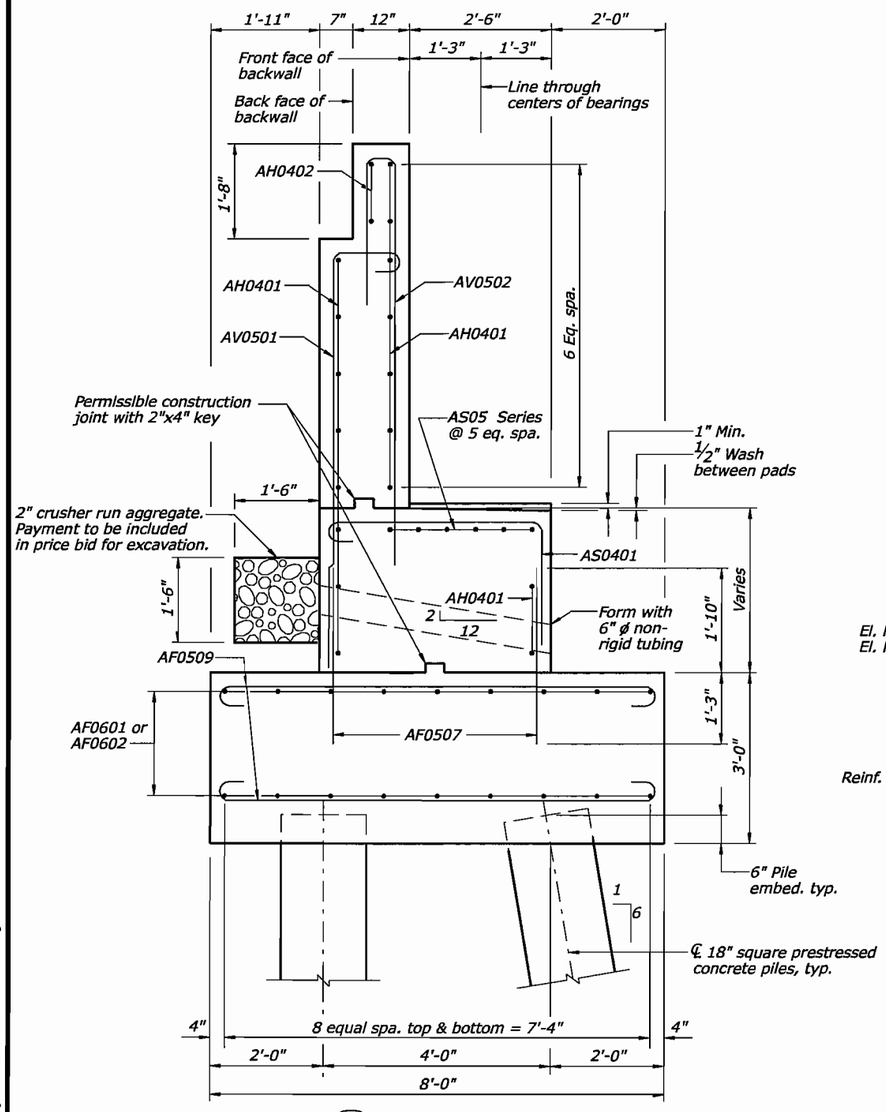

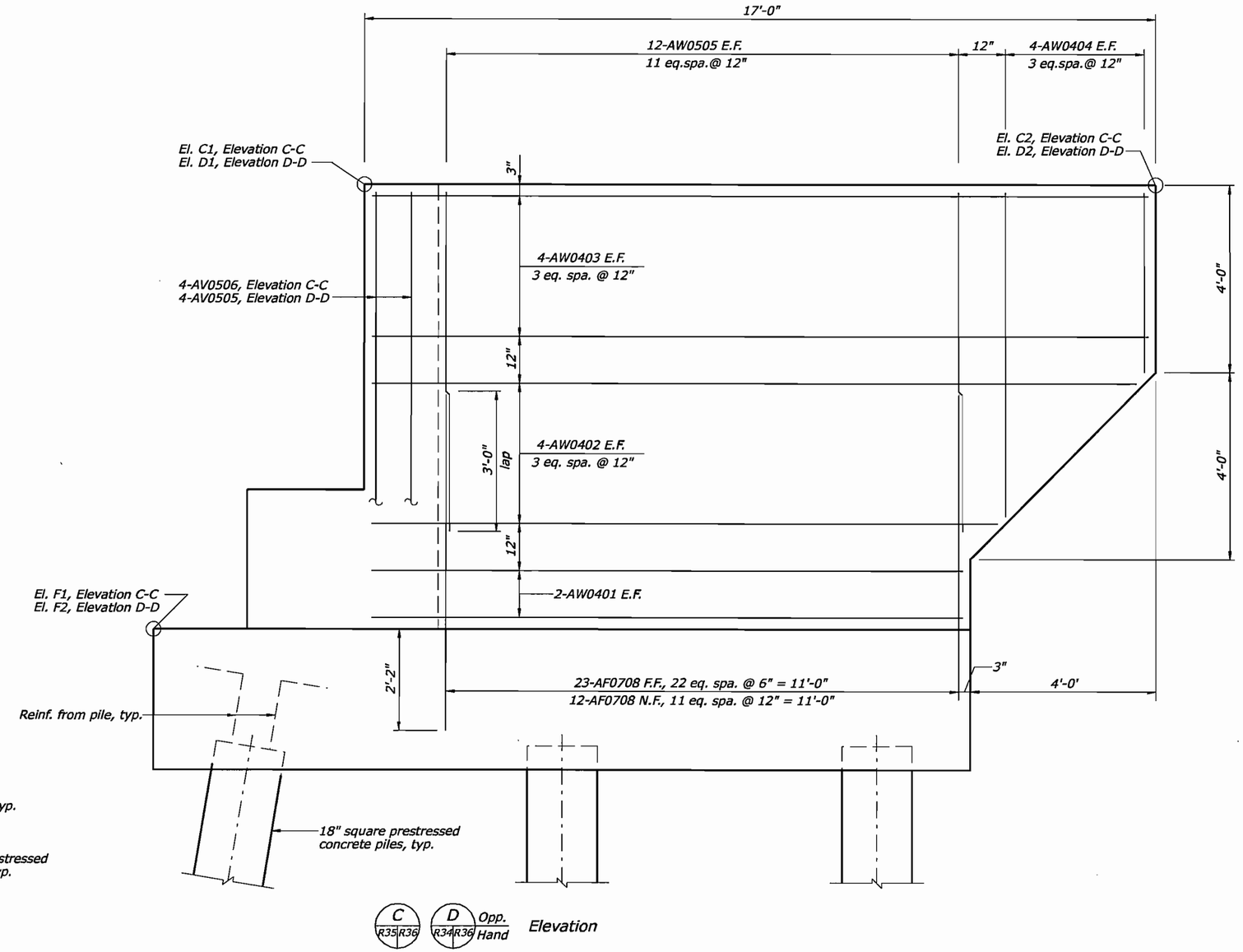

0 1.333 2.6666
SCALE IN FEET

Note:

For abbreviations, see sheet R35.

U.S. DEPARTMENT OF TRANSPORTATION
FEDERAL HIGHWAY ADMINISTRATION
EASTERN FEDERAL LANDS HIGHWAY DIVISION
STERLING, VIRGINIA

FORT BELVOIR - MULLIGAN ROAD
MULLIGAN ROAD OVER PINEY RUN

ABUTMENT SECTIONS, WINGWALLS

6/18/2008 11:52:39 AM C:\PwWorking\PITT\dms9613\Abut-A_Sec.dgn

REG	STATE	PROJECT	SHEET NO.
-	VA	VA-A-AD-48(1)	R37

Note:

For abbreviations, see sheet R35.

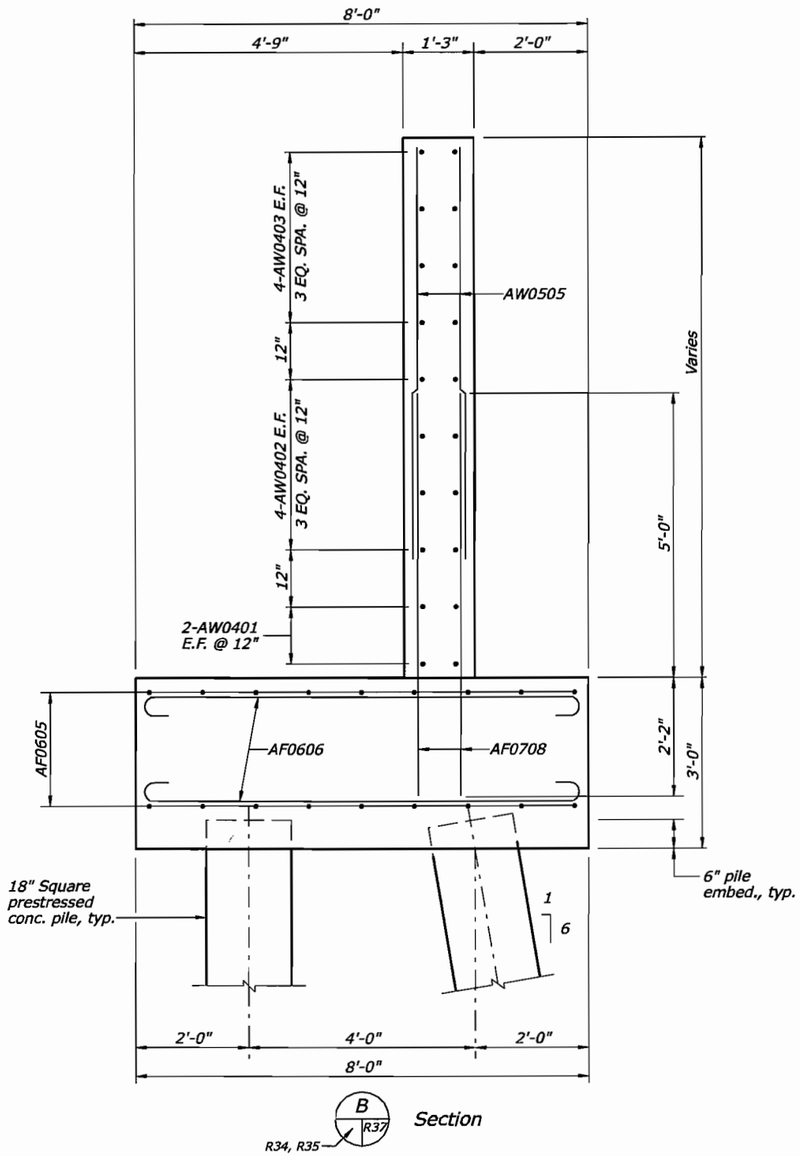

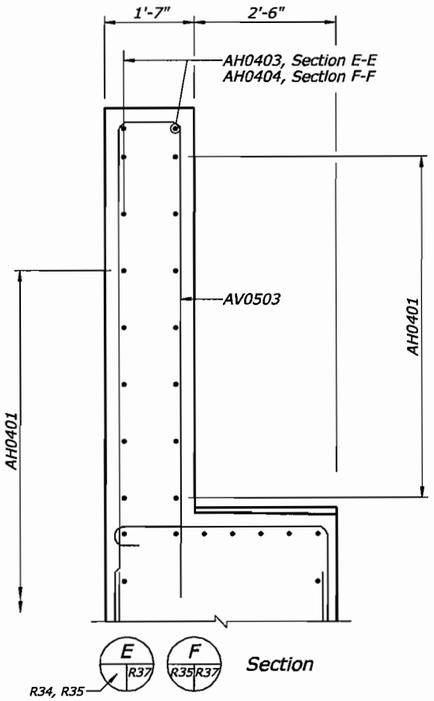

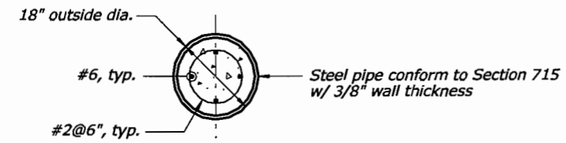

Section A-A

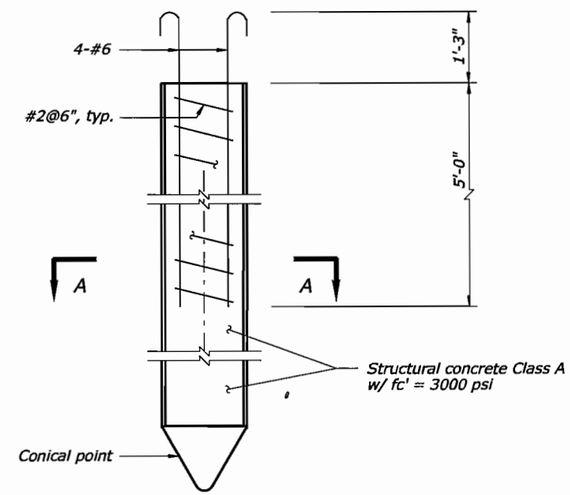

Optional cast-in-place concrete pile details

Not to scale

Note: cost of concrete and reinforcing steel shall be included in the price bid of piles.

0 1.333 2.667
SCALE IN FEET

U.S. DEPARTMENT OF TRANSPORTATION
FEDERAL HIGHWAY ADMINISTRATION
EASTERN FEDERAL LANDS HIGHWAY DIVISION
STERLING, VIRGINIA

FORT BELVOIR - MULLIGAN ROAD
MULLIGAN ROAD OVER PINEY RUN

ABUTMENT DETAILS

6/18/2008 11:51:22 AM C:\PwWorking\PITT\dms96i3\Abut_A_Det.dgn

REG	STATE	PROJECT	SHEET NO.
-	VA	VA-A-AD-48(1)	R38

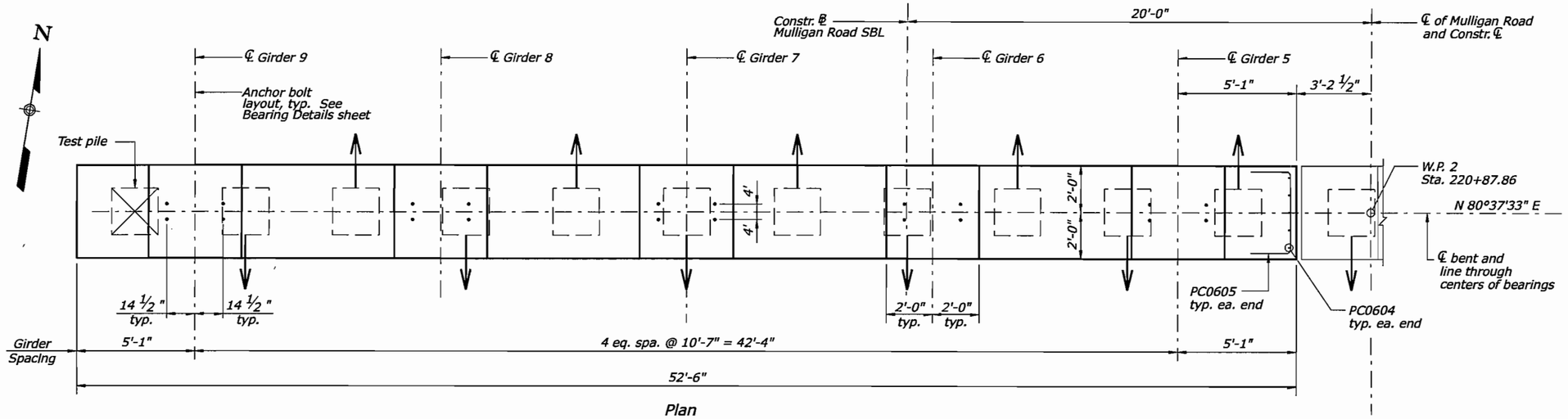

Plan

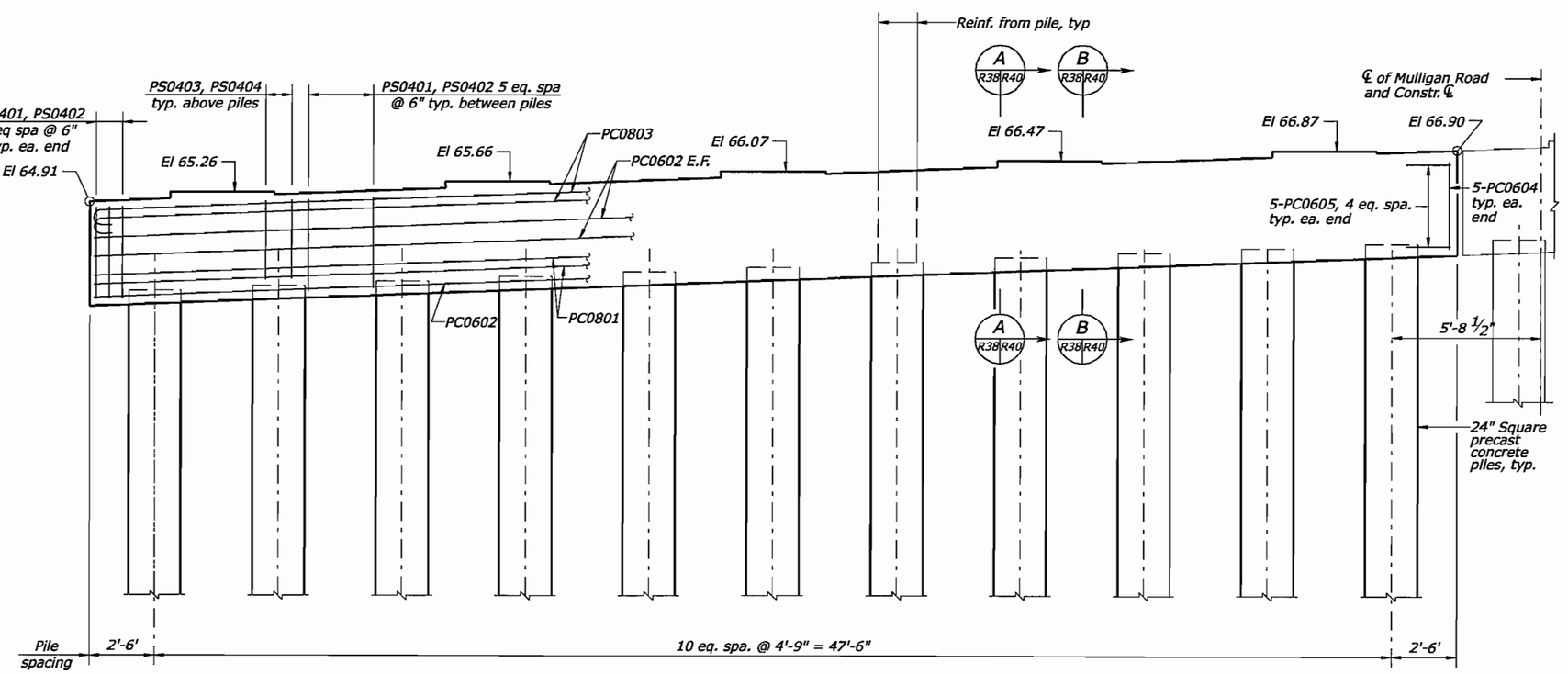

Elevation

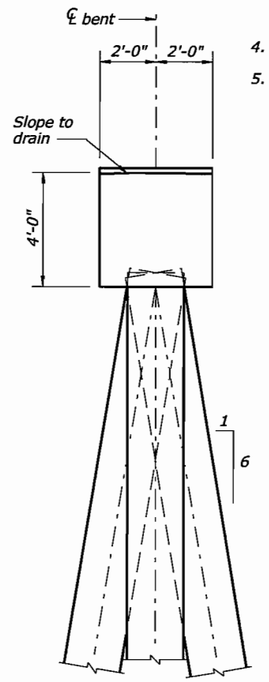

END VIEW

0 2.667 5.333
SCALE IN FEET

Denotes battered piles

Denotes test pile

Note:

1. The contractor shall adjust reinforcing steel to clear anchor bolts as necessary.
2. When finishing concrete between and beyond pads, float surface to drain from centerline bent to edges of cap.
3. The bent seat elevations were determined based on the bearing height shown on the bearing sheet. If different bearing heights are used, the contracotr shall adjust the seat elevations at no additional cost to the Owner.
4. For abbreviations, see sheet R35.
5. Estimated pile tip elevation at bent is -23.1.

U.S. DEPARTMENT OF TRANSPORTATION
FEDERAL HIGHWAY ADMINISTRATION
EASTERN FEDERAL LANDS HIGHWAY DIVISION
STERLING, VIRGINIA

FORT BELVOIR - MULLIGAN ROAD
MULLIGAN ROAD OVER PINEY RUN

BENT PLAN AND ELEVATION

Sheet 1 of 2

6/18/2008 2:43:12 PM C:\PwWorking\PITT\dms96131\Bent_1.dgn

REG	STATE	PROJECT	SHEET NO.
-	VA	VA-A-AD-48(1)	R39

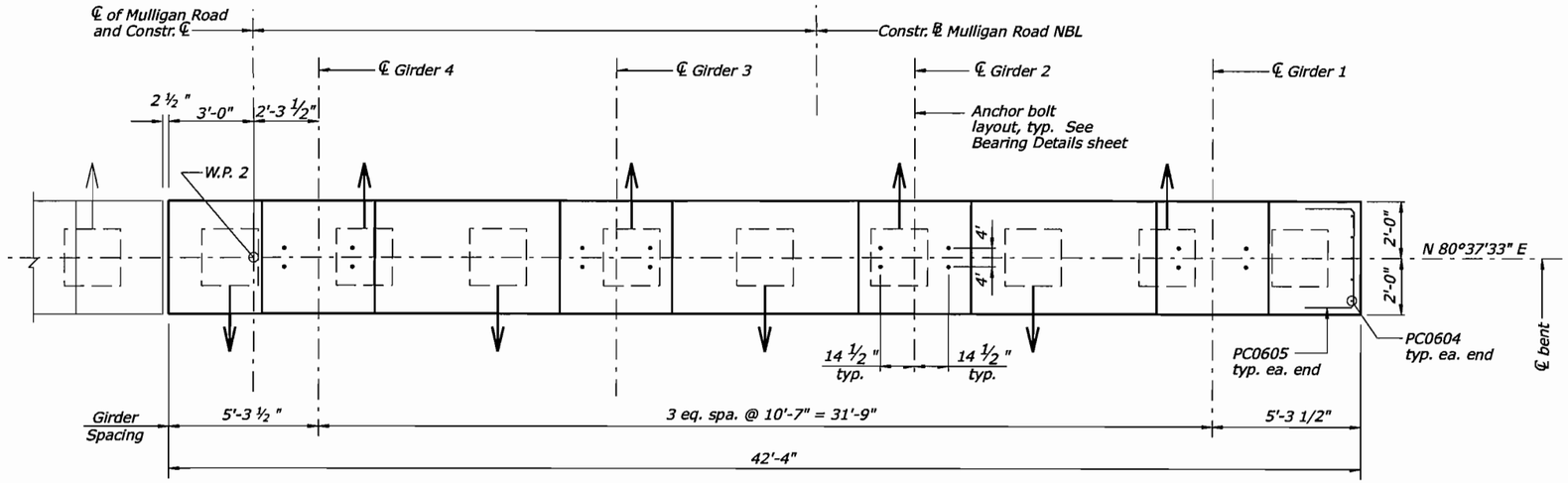

Plan

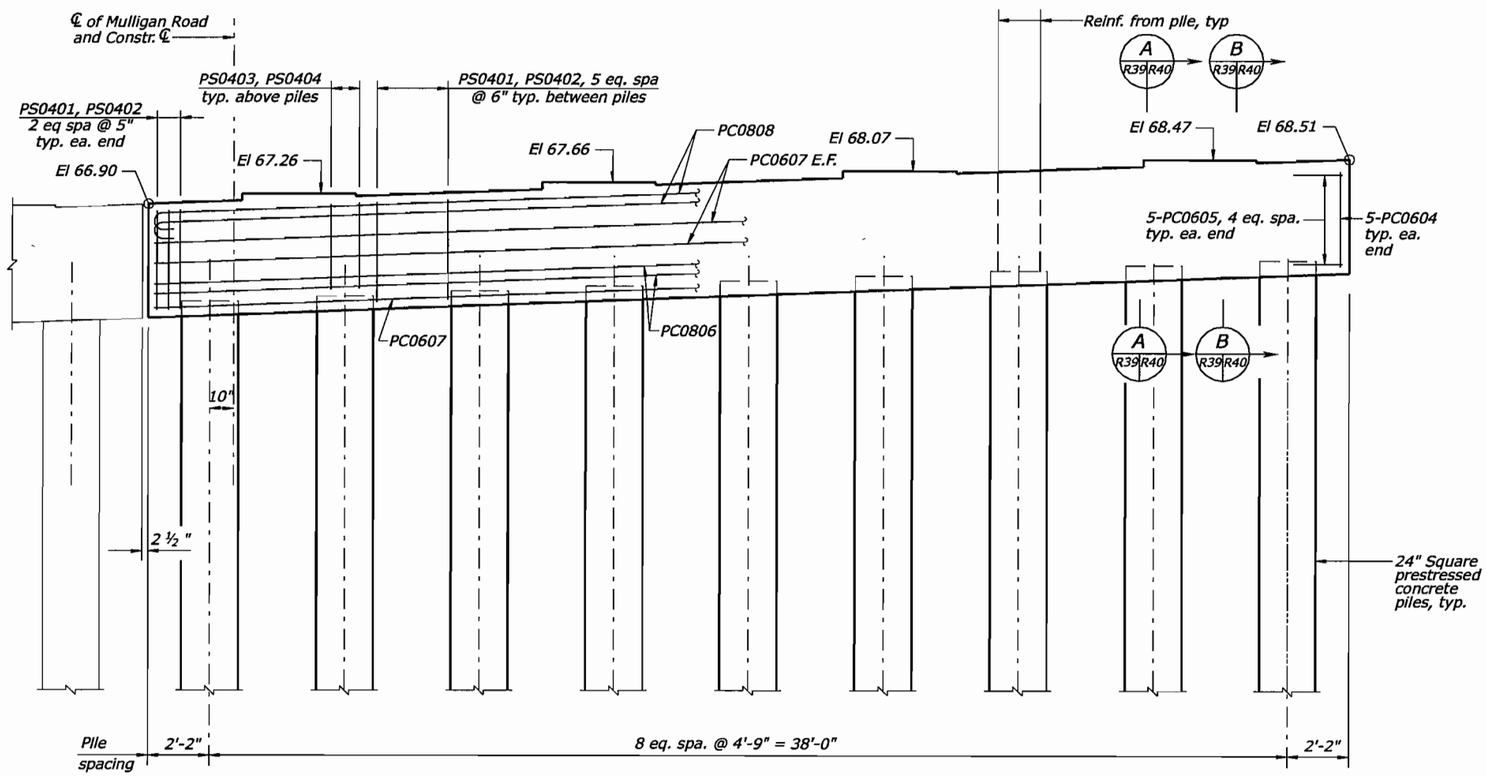

Elevation

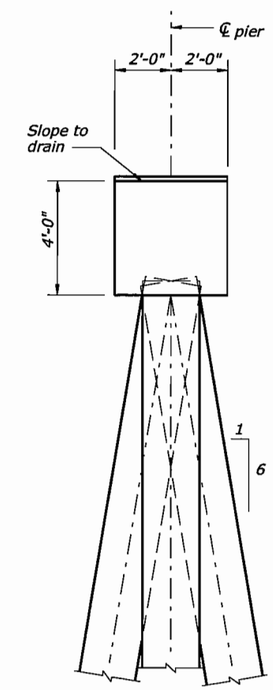

END VIEW

0 2.667 5.333
SCALE IN FEET

N

Denotes battered piles

Note:

1. The contractor shall adjust reinforcing steel to clear anchor bolts as necessary.
2. When finishing concrete between and beyond pads, float surface to drain from centerline bent to edges of cap.
3. The bent seat elevations were determined based on the bearing height shown on the bearing sheet. If different bearing heights are used, the contracotr shall adjust the seat elevations at no additional cost to the Owner.
4. For abbreviations, see sheet R35.
5. Estimated pile tip elevation at bent is -23.1.

U.S. DEPARTMENT OF TRANSPORTATION
FEDERAL HIGHWAY ADMINISTRATION
EASTERN FEDERAL LANDS HIGHWAY DIVISION
STERLING, VIRGINIA

FORT BELVOIR - MULLIGAN ROAD
MULLIGAN ROAD OVER PINEY RUN

BENT PLAN AND ELEVATION

Sheet 2 of 2

6/18/2008 11:58:40 AM C:\PwWorking\PITT\dms96131\Bent_2.dgn

REG	STATE	PROJECT	SHEET NO.
-	VA	VA-A-AD-48(1)	R40

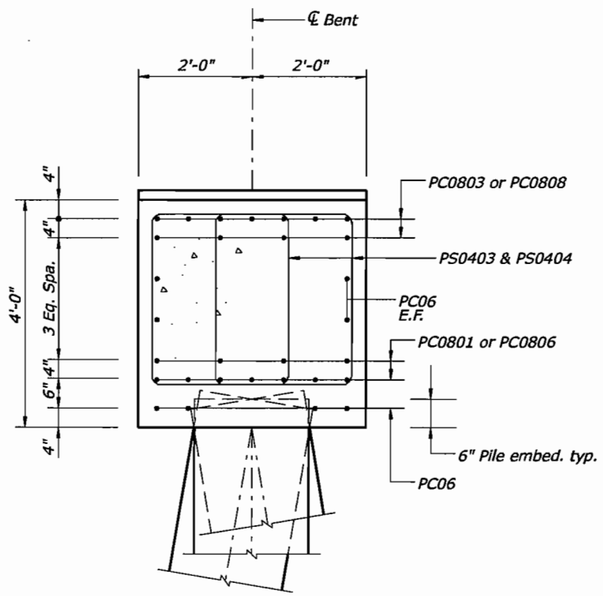

Section A-A

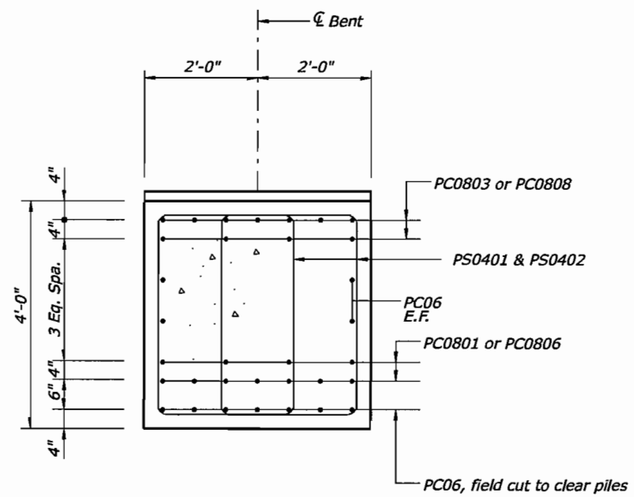

Section B-B

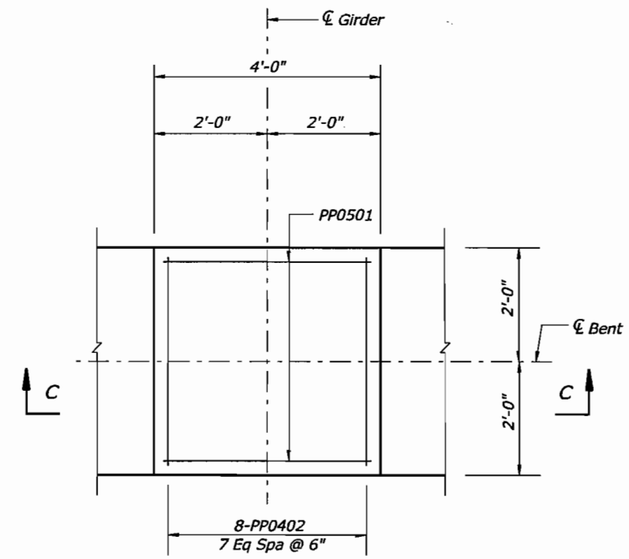

Pad Reinforcement Plan

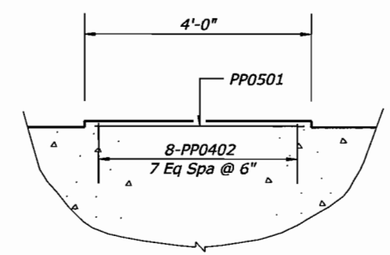

Section C-C

Note:

For abbreviations, see sheet R35.

0 1.333 2.666
Scale in Feet

U.S. DEPARTMENT OF TRANSPORTATION
FEDERAL HIGHWAY ADMINISTRATION
EASTERN FEDERAL LANDS HIGHWAY DIVISION
STERLING, VIRGINIA

FORT BELVOIR - MULLIGAN ROAD
MULLIGAN ROAD OVER PINEY RUN

BENT DETAILS

6/18/2008 12:00:00 PM C:\PwWorking\PITT\dms96131\Bent_Details.dgn

REG	STATE	PROJECT	SHEET NO.
-	VA	VA-A-AD-48(1)	R41

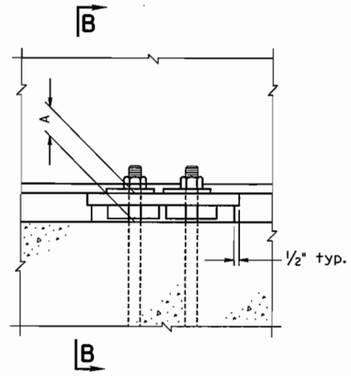

EXPANSION ASSEMBLY
ABUTMENT ELEVATION

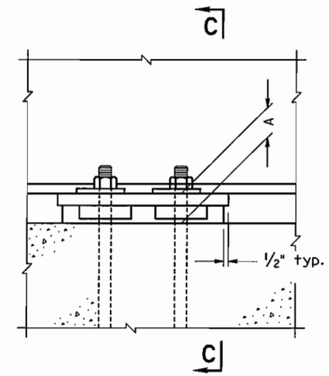

FIXED ASSEMBLY
BENT ELEVATION

Notes:

The Contractor shall furnish elastomeric bearing assembly at the expansion bearing. The contractor shall have a professional engineer check the adequacy of the anchor bolts and redesign the sole plate and number of anchor bolts as required.

Material: Elastomer - 50 durometer hardness.
Shim - ASTM A36 or A570 mild steel.

Bevel sole plates to grade shown. Minimum sole plate thickness is 3/4". Plates shall not be painted on the surface in contact with the elastomeric bearing.

Elastomeric bearings shall be molded as a single unit.

Anchor bolts shall be AASHTO M314, Grade 55.

* Weld shall terminate 1/4" from edge of sole plate.

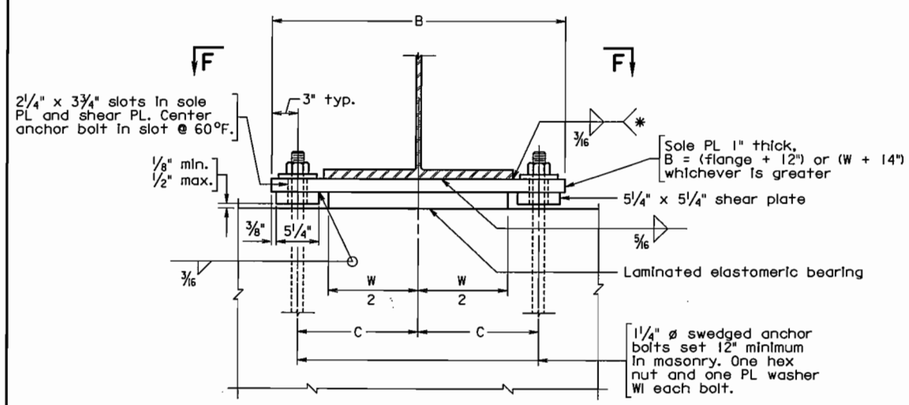

SECTION D-D

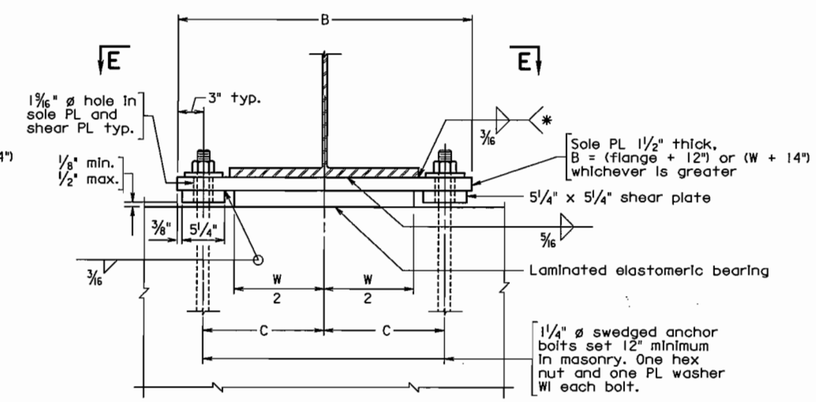

SECTION C-C

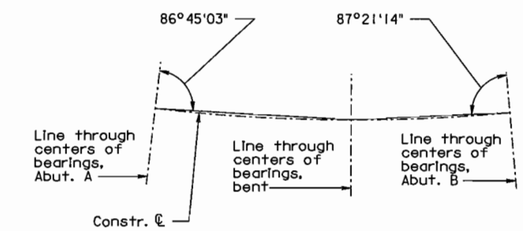

TYP. BEARING LAYOUT @ ABUTMENTS

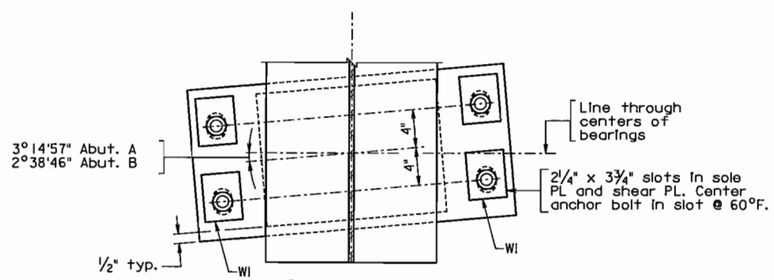

SECTION F-F
Abutment A shown, Abutment B opposite hand

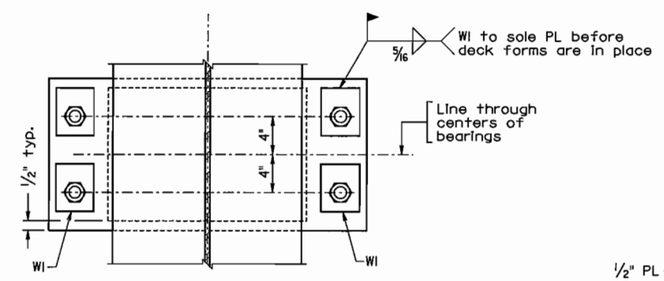

SECTION E-E

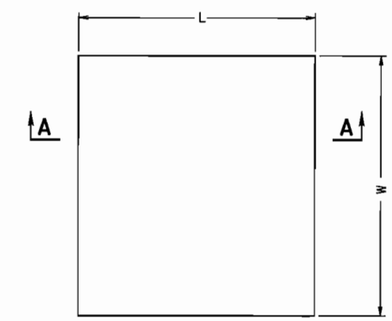

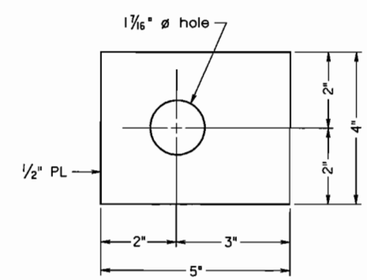

WASHER WI

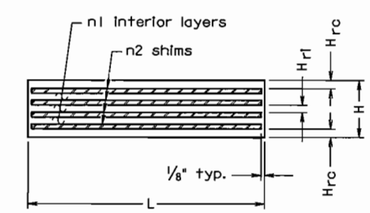

SECTION A-A
LAMINATED ELASTOMERIC BEARING

Span	Abut.	Bent	A	C	Laminated Elastomeric Bearing						Grade %	Total Vertical Load (kips)	Total Horizontal Load (kips)	Rotation (radians)	Quantity
					W	L	H	H_{rc}	n1 @ H_{r1}	n2 @ H_s					
1	A		3.625	12"	18	13	2.625	0.25	4 @ 0.3750	5 @ 0.1250	.6542	210	7	0.003	9
1 & 2		1	4.375	14 1/2"	21	20	2.875	0.25	4 @ 0.4375	5 @ 0.1250	.6542	470	7	0.002	9
2	B		3.625	12"	18	13	2.625	0.25	4 @ 0.3750	5 @ 0.1250	.6542	180	7	0.003	9

All dimensions in table are in inches.

Not to scale

U.S. DEPARTMENT OF TRANSPORTATION
FEDERAL HIGHWAY ADMINISTRATION
EASTERN FEDERAL LANDS HIGHWAY DIVISION
STERLING, VIRGINIA

FORT BELVOIR - MULLIGAN ROAD
MULLIGAN ROAD OVER PINEY RUN

BEARING DETAILS

DET. E564-A

6/19/2008 11:05:38 AM C:\PWworking\PITT\dms96131\bbd9.dgn

REG	STATE	PROJECT	SHEET NO.
-	VA	VA-A-AD-48(1)	R42

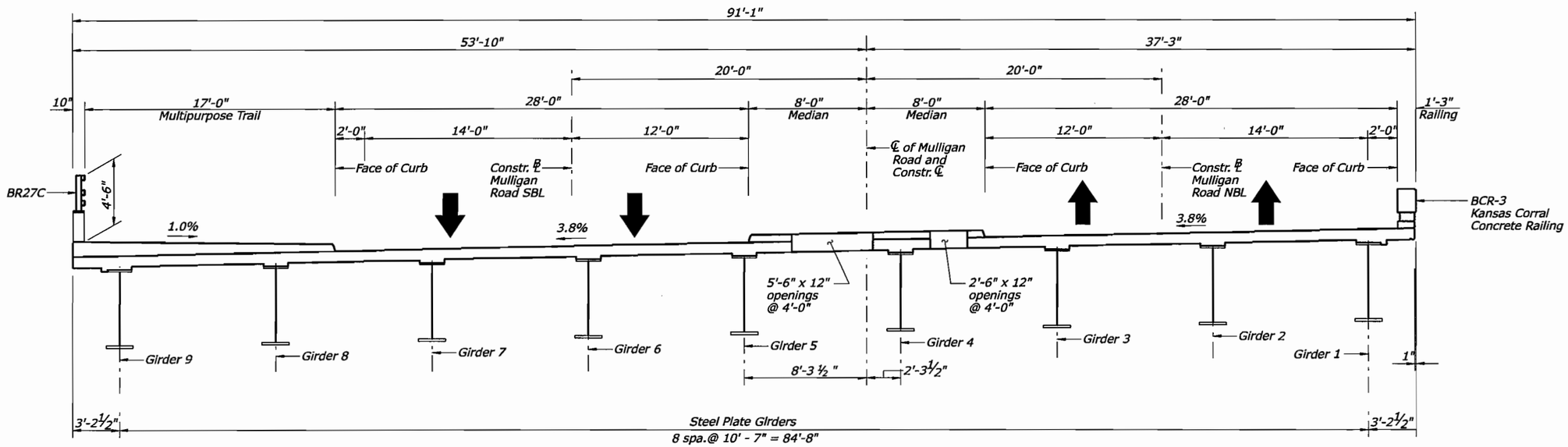

Transverse Section

0 4 8
SCALE IN FEET

U.S. DEPARTMENT OF TRANSPORTATION
FEDERAL HIGHWAY ADMINISTRATION
EASTERN FEDERAL LANDS HIGHWAY DIVISION
STERLING, VIRGINIA

FORT BELVOIR - MULLIGAN ROAD
MULLIGAN ROAD OVER PINEY RUN

TRANSVERSE SECTION

6/18/2008 2:40:47 PM C:\PwWorking\PITT\dms96\3\transversa.dgn

REG	STATE	PROJECT	SHEET NO.
-	VA	VA-A-AD-48(1)	R43

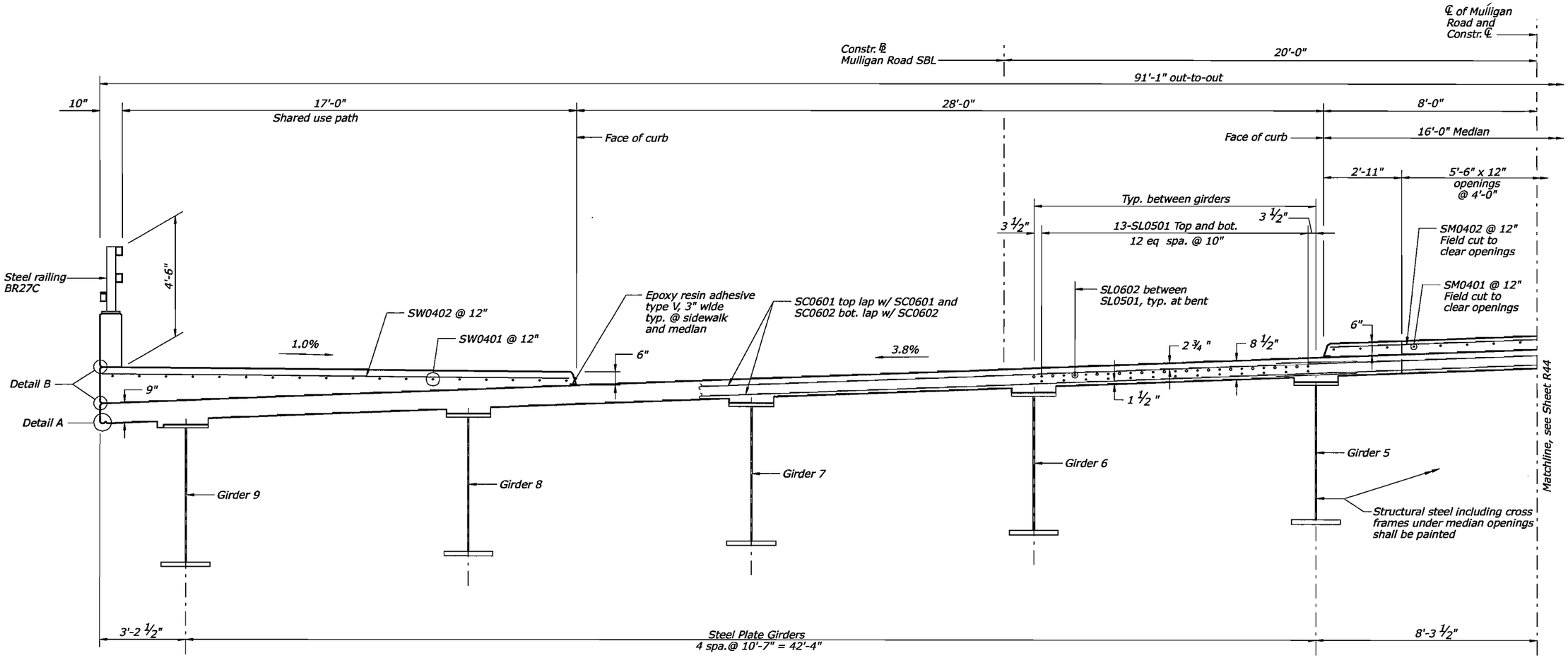

Transverse Section
Scale: 1/2" = 1'-0"

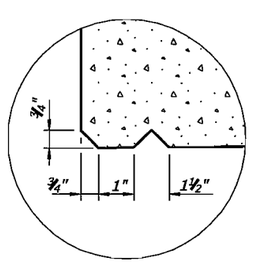

Detail A
Not to scale

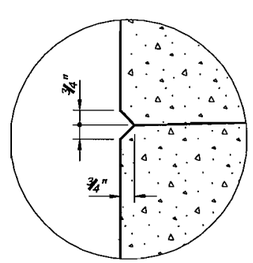

Detail B
Not to scale

Notes:

1. Equivalent welded wire fabric can be used to substitude SW & SM bars.
2. See Median Plan on Sheet R45 for details of median construction.
3. For overhang reinforcement, see sheet 2 of 2.
4. Cost of epoxy resin adhesive shall be included in the price bid of structural concrete class HPC.

0 2 4
SCALE IN FEET

U.S. DEPARTMENT OF TRANSPORTATION
FEDERAL HIGHWAY ADMINISTRATION
EASTERN FEDERAL LANDS HIGHWAY DIVISION
STERLING, VIRGINIA

FORT BELVOIR - MULLIGAN ROAD
MULLIGAN ROAD OVER PINEY RUN

TRANSVERSE SECTION DETAILS

Sheet 1 of 2

6/18/2008 2:41:15 PM C:\PwWorking\PITT\dms96131\transverse.dgn

REG	STATE	PROJECT	SHEET NO.
-	VA	VA-A-AD-48(1)	R44

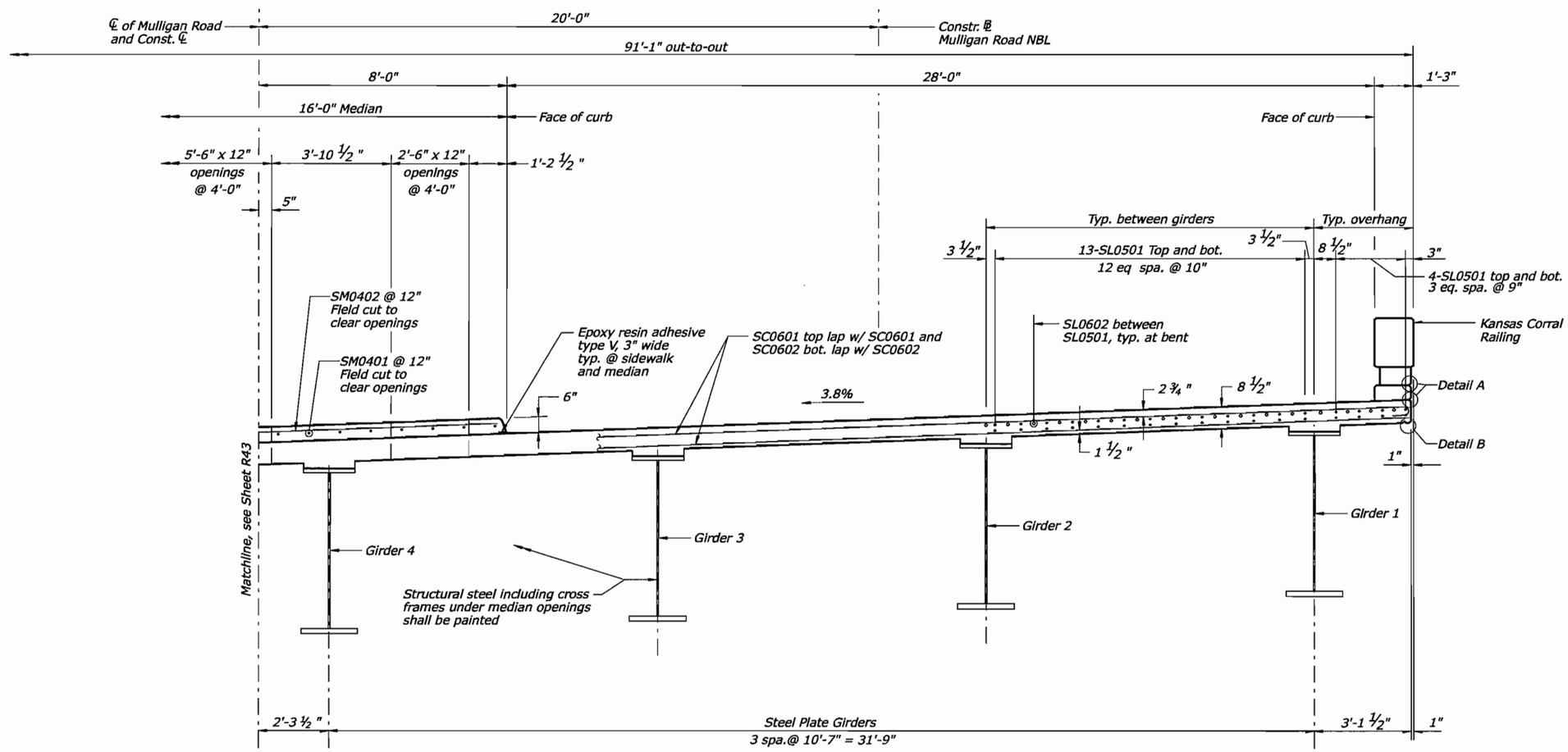

Transverse Section
Scale: ½" = 1'-0"

Notes:

1. For Detail A & B, see sheet 1 of 2.
2. For other notes, see sheet 1 of 2.

0 2 4
SCALE IN FEET

U.S. DEPARTMENT OF TRANSPORTATION
FEDERAL HIGHWAY ADMINISTRATION
EASTERN FEDERAL LANDS HIGHWAY DIVISION
STERLING, VIRGINIA

FORT BELVOIR - MULLIGAN ROAD
MULLIGAN ROAD OVER PINEY RUN

TRANSVERSE SECTION DETAILS

Sheet 2 of 2

6/18/2008 2:41:42 PM C:\PwWorking\PITT\dms96\3\Transverse2.dgn

REG	STATE	PROJECT	SHEET NO.
-	VA	VA-A-AD-48(1)	R45

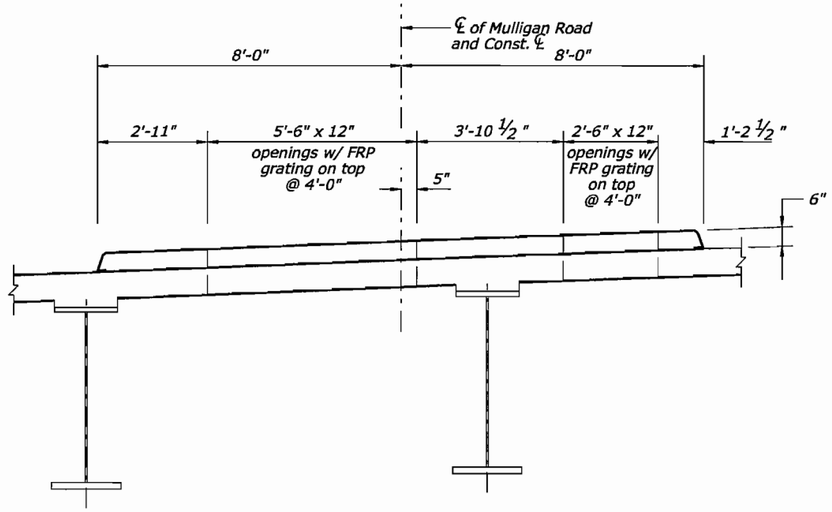

Section A-A
Looking upstation

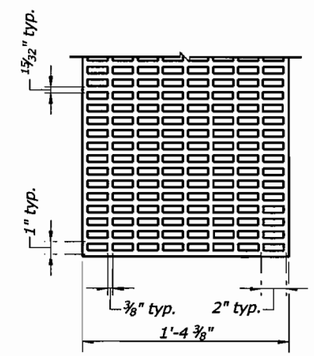

Part Plan of FRP Grating
Not to scale

Notes:

1. Reinforcing bars are not shown on this sheet for clarity.
2. FRP grating shall have the capacity to resist loadings of HL-93.
3. FRP grating shall have adequate anchoring device for connection to the deck.
4. The Contractor has the option to extend the FRP grating walls down to the bottom of the deck, so that the FRP grating walls will act as formwork for the openings, at no additional cost to the Owner.
5. The Contractor has the option to use reinforcing bars of the same size and spacing which will fit between the median openings, instead of field cutting reinforcing bars, at no additional cost to the Owner.
6. The cost of the FRP gratings shall be included in the price bid of Structural Concrete Class HPC.
7. The Contractor has the option to use similar FRP grating that has a minimum of 48% open surface area.

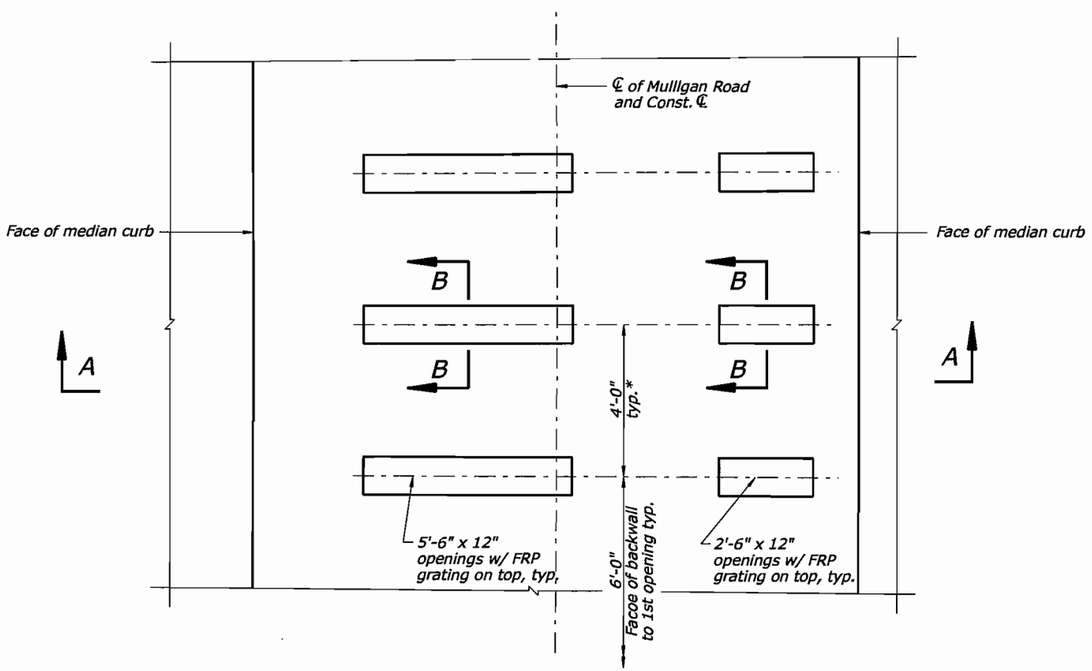

Median Plan
* No opening at ℄ bent, see Deck Plan, Sheet R51.

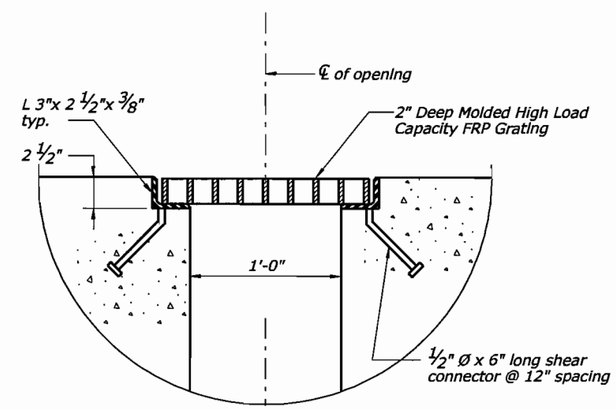

Section B-B
Not to scale

Note: Provide threaded studs on top of the angle lower leg to secure FRP grating to the deck. Submit details to the Engineer for approval.

0 2 4
SCALE IN FEET

U.S. DEPARTMENT OF TRANSPORTATION
FEDERAL HIGHWAY ADMINISTRATION
EASTERN FEDERAL LANDS HIGHWAY DIVISION
STERLING, VIRGINIA

FORT BELVOIR - MULLIGAN ROAD
MULLIGAN ROAD OVER PINEY RUN

MEDIAN PLAN

6/18/2008 2:35:07 PM C:\PwWorking\PITT\dms95\13\Median.dgn

REG	STATE	PROJECT	SHEET NO.
-	VA	VA-A-AD-48(1)	R46

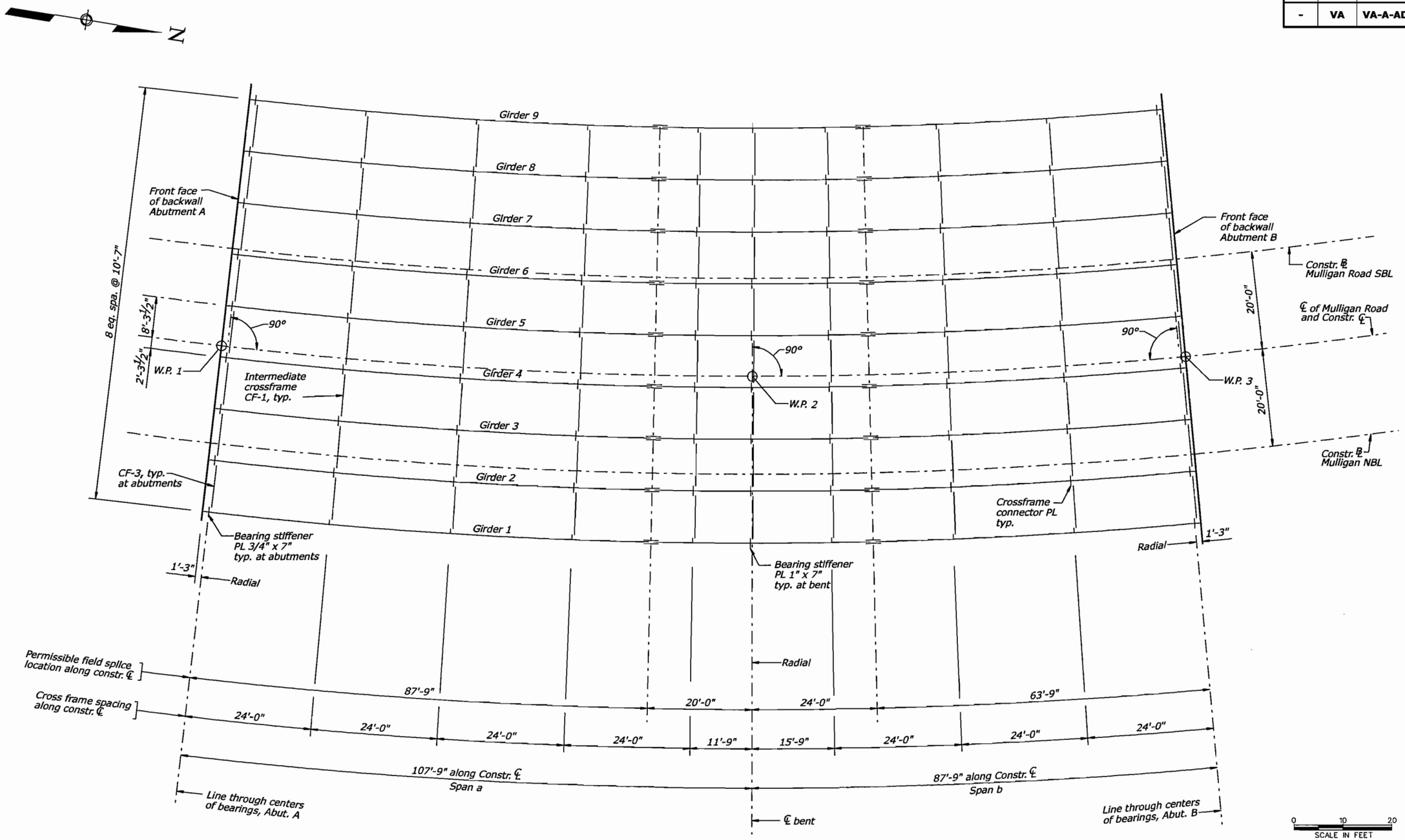

Framing Plan

Notes:

1. All crossframes are radial to Constr. ℄.
2. For typical steel details, see sheet R47.
3. For crossframe details,see sheet R50.
4. For field splice details, see sheet R50.
5. For bearing details, see sheet R41.

U.S. DEPARTMENT OF TRANSPORTATION
FEDERAL HIGHWAY ADMINISTRATION
EASTERN FEDERAL LANDS HIGHWAY DIVISION
STERLING, VIRGINIA

FORT BELVOIR - MULLIGAN ROAD
MULLIGAN ROAD OVER PINEY RUN

FRAMING PLAN

6/18/2008 2:21:44 PM C:\PwWorking\PITT\dms95131\Framing_Plan.dgn

REG	STATE	PROJECT	SHEET NO.
-	VA	VA-A-AD-48(1)	R47

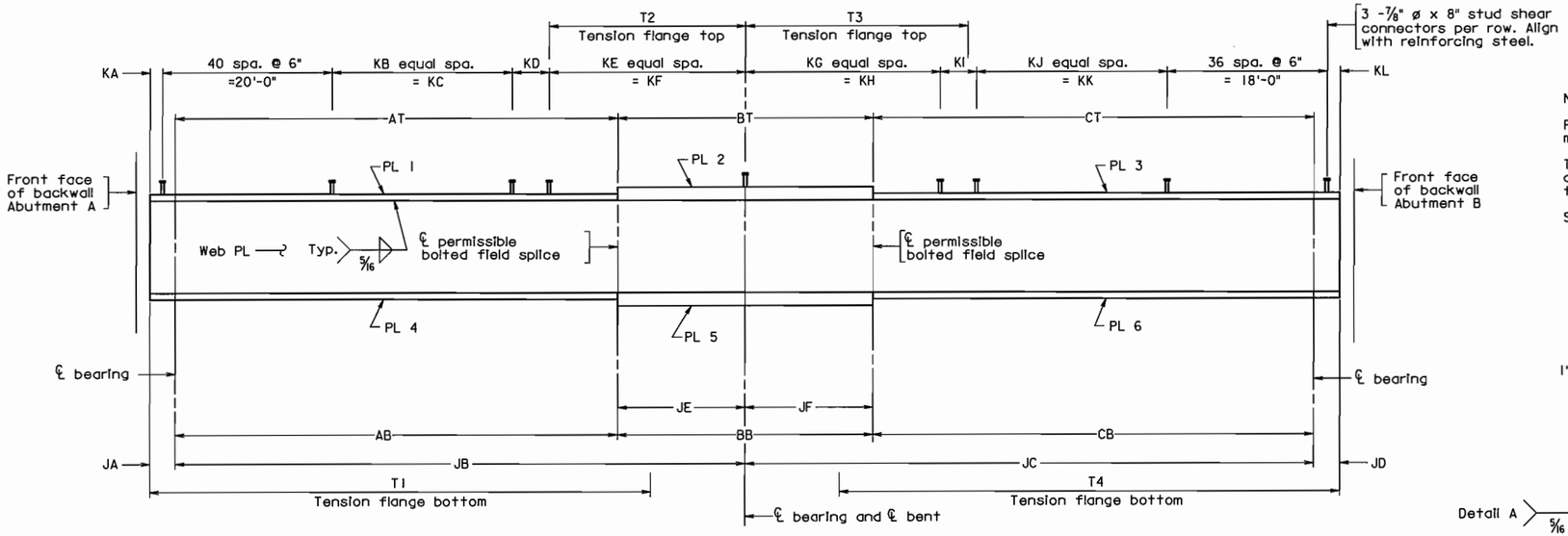

GIRDER ELEVATION

Notes:

For spacing of intermediate diaphragm connector PL's and intermediate web stiffener PL's, see Framing Plan, sheet R46.

The top and bottom flanges as shown in Girder Elevation, the web, diaphragm members, gusset plates and all splice plates are areas of tensile stress for Charpy V-Notch impact requirements.

Symbol ø = diameter.

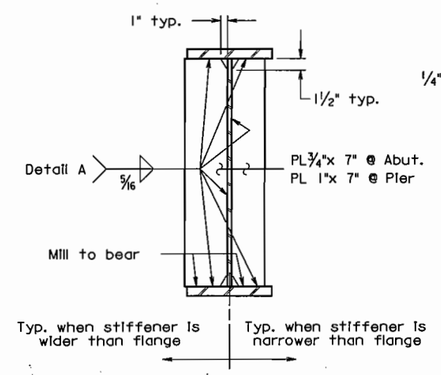

BEARING STIFFENERS

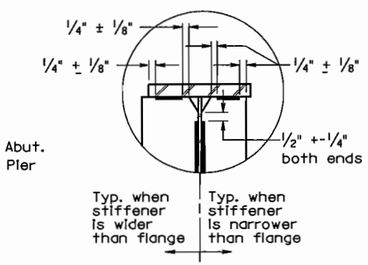

DETAIL A

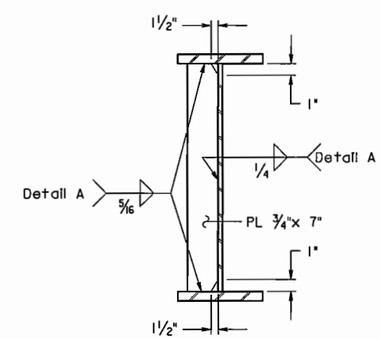

CROSS FRAME CONNECTOR PLATE

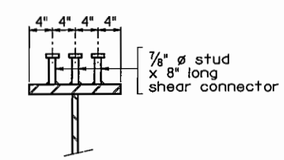

TYPICAL STUD SHEAR CONNECTOR DETAIL

PLATE DIMENSION TABLE

Girder	Web PL	PL 1	PL 2	PL 3	PL 4	PL 5	PL 6
1	54 x 9/16	16 x 3/4	16 x 1 1/2	16 x 3/4	18 x 1 3/8	18 x 1 5/8	18 x 7/8
2	54 x 9/16	16 x 3/4	16 x 1 1/2	16 x 3/4	18 x 1 3/8	18 x 1 5/8	18 x 7/8
3	54 x 9/16	16 x 3/4	16 x 1 1/2	16 x 3/4	18 x 1 3/8	18 x 1 5/8	18 x 7/8
4	54 x 9/16	16 x 3/4	16 x 1 1/2	16 x 3/4	18 x 1 3/8	18 x 1 5/8	18 x 7/8
5	54 x 9/16	16 x 3/4	16 x 1 1/2	16 x 3/4	18 x 1 1/8	18 x 1 1/2	18 x 3/4
6	54 x 9/16	16 x 3/4	16 x 1 1/2	16 x 3/4	18 x 1 1/8	18 x 1 1/2	18 x 3/4
7	54 x 9/16	16 x 3/4	16 x 1 1/2	16 x 3/4	18 x 1 1/8	18 x 1 1/2	18 x 3/4
8	54 x 9/16	16 x 3/4	16 x 1 1/2	16 x 3/4	18 x 1 1/8	18 x 1 1/2	18 x 3/4
9	54 x 9/16	16 x 3/4	16 x 1 1/2	16 x 3/4	18 x 1 1/8	18 x 1 1/2	18 x 3/4

GIRDER DIMENSION TABLE

Girder	AB	AT	BB	BT	CB	CT
1	90'-10 3/4"	90'-10 3/4"	45'-6 7/8"	45'-6 7/8"	66'-0 3/8"	66'-0 3/8"
2	89'-11"	89'-11"	45'-1"	45'-1"	65'-3 7/8"	65'-3 7/8"
3	88'-11 1/4"	88'-11 1/4"	44'-7 1/8"	44'-7 1/8"	64'-7 3/8"	64'-7 3/8"
4	87'-11 1/2"	87'-11 1/2"	44'-1 1/4"	44'-1 1/4"	63'-10 7/8"	63'-10 7/8"
5	86'-11 3/4"	86'-11 3/4"	43'-7 3/8"	43'-7 3/8"	63'-2 3/8"	63'-2 3/8"
6	86'-0 1/8"	86'-0 1/8"	43'-1 1/2"	43'-1 1/2"	62'-5 3/4"	62'-5 3/4"
7	85'-0 3/8"	85'-0 3/8"	42'-7 5/8"	42'-7 5/8"	61'-9 1/4"	61'-9 1/4"
8	84'-6 1/8"	84'-6 1/8"	42'-1 3/4"	42'-1 3/4"	61'-0 3/4"	61'-0 3/4"
9	83'-0 7/8"	83'-0 7/8"	41'-7 7/8"	41'-7 7/8"	60'-4 1/4"	60'-4 1/4"

GIRDER DIMENSION TABLE

Girder	JA	JB	JC	JD	JE	JF	KA	KB	KC	KD	KE	KF	KG	KH	KI	KJ	KK	KL	Radius
1	1'-0"	111'-7 3/8"	90'-10 3/4"	1'-0"	20'-3"	24'-10 3/8"	6"	50	50'-0"	7 3/8"	83	41'-6"	76	38'-0"	4 3/4"	35	35'-0"	6"	984'-0 1/2"
2	1'-0"	110'-4 7/8"	89'-11"	1'-0"	20'-0 3/8"	24'-7 1/8"	6"	49	49'-0"	10 7/8"	82	41'-0"	75	37'-6"	11"	34	34'-0"	6"	973'-5 1/2"
3	1'-0"	109'-2 1/2"	88'-11 1/4"	1'-0"	19'-9 3/4"	24'-3 7/8"	6"	48	48'-0"	14 1/2"	81	40'-6"	74	37'-0"	5 1/4"	34	34'-0"	6"	962'-10 1/2"
4	1'-0"	108'-0 1/8"	87'-11 1/2"	1'-0"	19'-7 1/8'	24'-0 3/4"	6"	48	48'-0"	6 1/8"	80	40'-0"	73	36'-6"	11 1/2"	33	33'-0"	6"	952'-3 1/2"
5	1'-0"	106'-9 3/4"	86'-11 3/4"	1'-0"	19'-9 7/8"	23'-9 1/2"	6"	47	47'-0"	9 3/4"	79	39'-6"	72	36'-0"	5 3/4"	33	33'-0"	6"	941'-8 1/2"
6	1'-0"	105'-7 1/4"	86'-0 1/8"	1'-0"	19'-7 1/4"	23'-6 1/4"	6"	46	46'-0"	13 1/4"	78	39'-0"	71	35'-6"	12 1/8"	32	32'-0"	6"	931'-1 1/2"
7	1'-0"	104'-4 7/8"	85'-0 3/8"	1'-0"	19'-4 1/2"	23'-3 1/8"	6"	46	46'-0"	4 7/8"	77	38'-6"	70	35'-0"	6 3/8"	32	32'-0"	6"	920'-6 1/2"
8	1'-0"	103'-2 1/2"	84'-6 1/8"	1'-0"	19'-1 7/8'	22'-11 7/8"	6"	45	45'-0"	8 1/2"	76	38'-0"	69	34'-6"	12 5/8"	31	31'-0"	6"	909'-11 1/2"
9	1'-0"	102'-0 1/4"	83'-8 7/8"	1'-0"	18'-11 1/4"	22'-8 5/8"	6"	44	44'-0"	12 1/8"	75	37'-6"	68	34'-0"	6 7/8"	31	31'-0"	6"	899'-4 1/2"

TENSION FLANGES

Girder	T1	T2	T3	T4
1	96'-0"	37'-0"	51'-0"	75'-0"
2	95'-0"	33'-0"	44'-0"	74'-0"
3	92'-0"	31'-0"	41'-0"	70'-0"
4	89'-0"	30'-0"	40'-0"	67'-0"
5	91'-0"	33'-0"	51'-0"	70'-0"
6	91'-0"	31'-0"	42'-0"	70'-0"
7	89'-0"	31'-0"	41'-0"	68'-0"
8	87'-0"	30'-0"	40'-0"	66'-0"
9	84'-0"	29'-0"	38'-0"	63'-0"

Not to scale

U.S. DEPARTMENT OF TRANSPORTATION
FEDERAL HIGHWAY ADMINISTRATION
EASTERN FEDERAL LANDS HIGHWAY DIVISION
STERLING, VIRGINIA

FORT BELVOIR - MULLIGAN ROAD
MULLIGAN ROAD OVER PINEY RUN

GIRDER ELEVATION

DET. E555-B

6/19/2008 11:05:09 AM C:\PWworking\PITT\dms96l3\sgdet2a.dgn

REG	STATE	PROJECT	SHEET NO.
-	VA	VA-A-AD-48(1)	R48

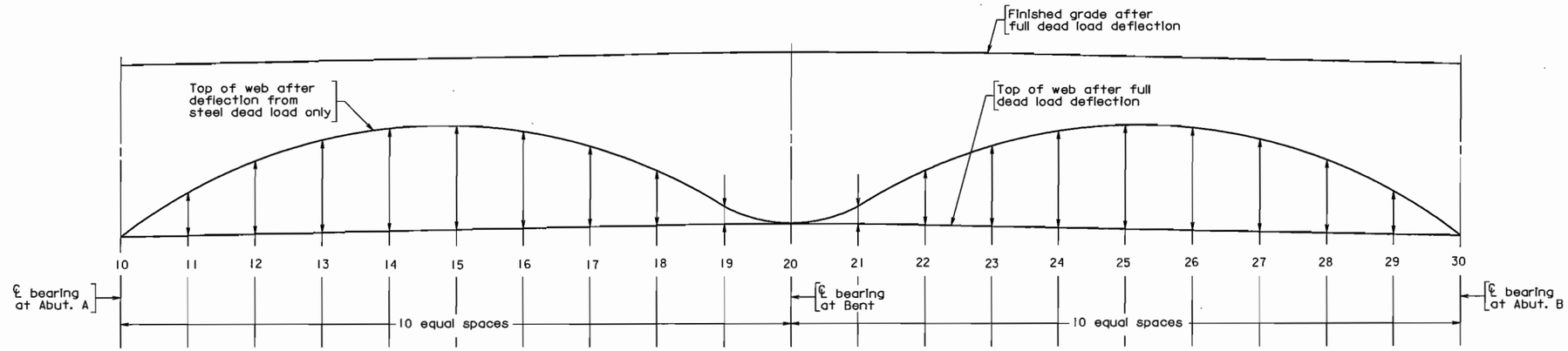

	Point	10	11	12	13	14	15	16	17	18	19	20	21	22	23	24	25	26	27	28	29	30
Girder 1	Δ'_s	0	13/16	1 7/16	1 7/8	2 1/8	2 1/16	1 13/16	1 3/8	7/8	5/16	0	1/16	1/16	1/16	3/16	3/8	7/16	7/16	3/8	1/4	0
	Δ_c	0	1/8	1/4	5/16	3/8	3/8	5/16	1/4	3/16	1/16	0	0	0	0	1/16	1/8	1/8	1/8	1/16	1/16	0
	Total	0	1	1 11/16	2 3/16	2 1/2	2 1/2	2 3/16	1 5/8	1 1/16	3/8	0	1/8	1/16	1/16	1/4	7/16	9/16	9/16	1/2	5/16	0
Girder 2	Δ'_s	0	13/16	1 7/16	1 13/16	2 1/16	2	1 3/4	1 5/16	7/8	5/16	0	1/16	0	1/16	1/4	3/8	7/16	1/2	7/16	1/4	0
	Δ_c	0	1/8	1/4	5/16	5/16	3/8	5/16	1/4	3/16	1/16	0	0	0	0	1/16	1/16	1/16	1/16	1/16	1/16	0
	Total	0	15/16	1 5/8	2 1/8	2 3/8	2 3/8	2 1/16	1 9/16	1	3/8	0	1/16	0	1/8	5/16	1/2	9/16	9/16	1/2	5/16	0
Girder 3	Δ'_s	0	13/16	1 3/8	1 3/4	2	2	1 3/4	1 5/16	13/16	5/16	0	1/16	0	1/16	1/4	3/8	7/16	1/2	7/16	1/4	0
	Δ_c	0	1/8	1/4	5/16	5/16	5/16	5/16	1/4	1/8	1/16	0	0	0	0	1/16	1/16	1/16	1/16	1/16	1/16	0
	Total	0	15/16	1 5/8	2 1/16	2 5/16	2 5/16	2	1 1/2	1	3/8	0	1/16	0	1/8	5/16	1/2	9/16	9/16	1/2	5/16	0
Girder 4	Δ'_s	0	3/4	1 3/8	1 3/4	1 15/16	1 15/16	1 11/16	1 1/4	13/16	5/16	0	1/16	0	1/16	1/4	3/8	7/16	7/16	3/8	1/4	0
	Δ_c	0	1/8	1/4	5/16	3/8	3/8	5/16	1/4	3/16	1/16	0	0	0	0	1/16	1/16	1/8	1/8	1/16	1/16	0
	Total	0	15/16	1 5/8	2 1/16	2 5/16	2 5/16	2	1 1/2	1	3/8	0	1/16	0	1/8	5/16	1/2	9/16	9/16	1/2	5/16	0
Girder 5	Δ'_s	0	3/4	1 5/16	1 11/16	1 7/8	1 7/8	1 5/8	1 1/4	13/16	5/16	0	-1/16	-1/16	0	3/16	5/16	3/8	3/8	5/16	3/16	0
	Δ_c	0	1/4	3/8	1/2	9/16	9/16	1/2	3/8	1/4	1/8	0	0	0	1/16	1/16	1/8	1/8	1/8	1/8	1/16	0
	Total	0	1	1 11/16	2 3/16	2 7/16	2 7/16	2 1/8	1 5/8	1 1/16	7/16	0	-1/16	-1/16	1/16	1/4	7/16	1/2	1/2	7/16	1/4	0
Girder 6	Δ'_s	0	3/4	1 1/4	1 5/8	1 13/16	1 13/16	1 5/8	1 3/16	3/4	1/4	0	-1/16	0	1/16	3/16	3/8	3/8	7/16	3/8	3/16	0
	Δ_c	0	3/16	3/8	7/16	1/2	1/2	7/16	3/8	1/4	1/16	0	0	0	1/16	1/16	1/8	1/8	1/8	1/8	1/16	0
	Total	0	15/16	1 5/8	2 1/8	2 3/8	2 3/8	2 1/16	1 9/16	1	5/16	0	-1/16	0	1/8	1/4	1/2	1/2	9/16	1/2	1/4	0
Girder 7	Δ'_s	0	11/16	1 1/4	1 9/16	1 3/4	1 3/4	1 1/2	1 1/8	3/4	1/4	0	-1/16	0	1/16	1/4	3/8	7/16	7/16	3/8	1/4	0
	Δ_c	0	3/16	5/16	7/16	1/2	1/2	7/16	5/16	3/16	1/16	0	0	0	1/16	1/16	1/8	1/8	1/8	1/8	1/16	0
	Total	0	7/8	1 9/16	2	2 1/4	2 1/4	1 15/16	1 7/16	15/16	5/16	0	-1/16	0	1/8	5/16	1/2	9/16	9/16	1/2	5/16	0
Girder 8	Δ'_s	0	5/8	1 1/8	1 7/16	1 5/8	1 5/8	1 3/8	1 1/16	11/16	1/4	0	-1/16	0	1/16	3/16	3/8	3/8	7/16	3/8	3/16	0
	Δ_c	0	3/16	5/16	3/8	7/16	7/16	3/8	5/16	3/16	1/16	0	0	0	1/16	1/16	1/8	1/8	1/8	1/8	1/16	0
	Total	0	13/16	1 7/16	1 7/8	2 1/16	2 1/16	1 13/16	1 3/8	7/8	5/16	0	-1/16	0	1/8	1/4	1/2	1/2	9/16	1/2	1/4	0
Girder 9	Δ'_s	0	9/16	1	1 1/4	1 3/8	1 3/8	1 3/16	15/16	9/16	3/16	0	-1/16	0	1/16	3/16	5/16	5/16	3/8	5/16	3/16	0
	Δ_c	0	3/16	1/4	3/8	3/8	7/16	3/8	1/4	3/16	1/16	0	0	0	1/16	1/16	1/8	1/8	1/8	1/8	1/16	0
	Total	0	3/4	1 1/4	1 5/8	1 3/4	1 13/16	1 9/16	1 3/16	3/4	1/4	0	-1/16	0	1/8	1/4	7/16	7/16	1/2	7/16	1/4	0

All values in Dead Load Deflection Table are in inches.

Δ'_s = Deflection of girder from dead load of concrete deck slab and bolsters.

Δ_c = Deflection of girder from dead load (e.g. parapet) added after deck slab is cast.

DEAD LOAD DEFLECTIONS

TOP OF SLAB ELEVATIONS ALONG ℄ GIRDER

Point	10	11	12	13	14	15	16	17	18	19	20	21	22	23	24	25	26	27	28	29	30
Girder 1	73.81	73.88	73.95	74.02	74.09	74.16	74.23	74.30	74.37	74.44	74.51	74.57	74.63	74.68	74.74	74.80	74.86	74.91	74.97	75.03	75.09
Girder 2	73.40	73.47	73.54	73.62	73.69	73.76	73.83	73.90	73.97	74.04	74.11	74.17	74.22	74.28	74.34	74.40	74.45	74.51	74.57	74.63	74.68
Girder 3	73.00	73.07	73.14	73.21	73.28	73.35	73.42	73.50	73.57	73.64	73.71	73.76	73.82	73.88	73.94	73.99	74.05	74.11	74.17	74.22	74.28
Girder 4	72.60	72.67	72.74	72.81	72.88	72.95	73.02	73.09	73.16	73.23	73.30	73.36	73.42	73.48	73.53	73.59	73.65	73.71	73.76	73.82	73.88
Girder 5	72.20	72.27	72.34	72.41	72.48	72.55	72.62	72.69	72.76	72.83	72.90	72.96	73.02	73.07	73.13	73.19	73.25	73.30	73.36	73.42	73.48
Girder 6	71.80	71.87	71.94	72.01	72.08	72.15	72.22	72.29	72.36	72.43	72.50	72.56	72.61	72.67	72.73	72.79	72.84	72.90	72.96	73.02	73.07
Girder 7	71.39	71.46	71.53	71.60	71.68	71.75	71.82	71.89	71.96	72.03	72.10	72.16	72.21	72.27	72.33	72.38	72.44	72.50	72.56	72.61	72.67
Girder 8	70.99	71.06	71.13	71.20	71.27	71.34	71.41	71.48	71.55	71.63	71.70	71.75	71.81	71.87	71.93	71.98	72.04	72.10	72.16	72.21	72.27
Girder 9	70.59	70.66	70.73	70.80	70.87	70.94	71.01	71.08	71.15	71.22	71.29	71.35	71.41	71.47	71.52	71.58	71.64	71.70	71.75	71.81	71.87

Not to scale

U.S. DEPARTMENT OF TRANSPORTATION
FEDERAL HIGHWAY ADMINISTRATION
EASTERN FEDERAL LANDS HIGHWAY DIVISION
STERLING, VIRGINIA

FORT BELVOIR - MULLIGAN ROAD
MULLIGAN ROAD OVER PINEY RUN

DEAD LOAD DEFLECTIONS AND SLAB ELEVATIONS

DET. E555-C

6/19/2008 11:04:35 AM C:\PWworking\PITT\dms96131\sgdld2c.dgn

REG	STATE	PROJECT	SHEET NO.
-	VA	VA-A-AD-48(1)	R49

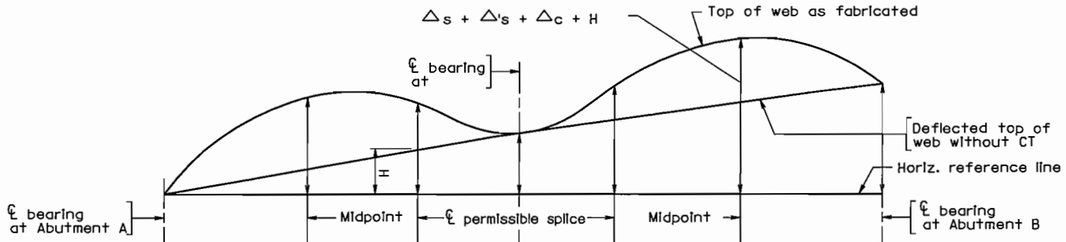

Girder 1	45'-5 3/8"	45'-5 3/8"	20'-8 9/16"	24'-10 5/16"	33'-0 3/16"	33'-0 3/16"
Girder 2	44'-11 1/2"	44'-11 1/2"	20'-5 15/16"	24'-7 1/8"	32'-7 15/16"	32'-7 15/16"
Girder 3	44'-5 5/8"	44'-5 5/8"	20'-3 1/4"	24'-3 7/8"	32'-3 11/16"	32'-3 11/16"
Girder 4	43'-11 3/4"	43'-11 3/4"	20'-0 9/16"	24'-0 11/16"	31'-11 7/16"	31'-11 7/16"
Girder 5	43'-5 15/16"	43'-5 15/16"	19'-9 7/8"	23'-9 1/2"	31'-7 3/8"	31'-7 3/8"
Girder 6	43'-0 1/16"	43'-0 1/16"	19'-7 3/16"	23'-6 1/4"	31'-2 7/8"	31'-2 7/8"
Girder 7	42'-6 3/16"	42'-6 3/16"	19'-4 9/16"	23'-3 1/16"	30'-10 5/8"	30'-10 5/8"
Girder 8	42'-0 5/16"	42'-0 5/16"	19'-1 7/8"	22'-11 7/8"	30'-6 3/8"	30'-6 3/8"
Girder 9	41'-6 7/16"	41'-6 7/16"	18'-11 3/16"	22'-8 5/8"	30'-2 1/8"	30'-2 1/8"

CAMBER

Girder 1	△s	0"	7/16"	3/16"	0"	0"	1/16"	0"
	△'s	0"	2 1/8"	13/16"	0"	0"	7/16"	0"
	△c	0"	3/8"	3/16"	0"	0"	1/8"	0"
	H	0"	3 7/16"	6 7/8"	8 7/16"	10 5/16"	1'- 0 7/8"	1'-3 3/8"
	Total	0"	6 3/8"	8 1/16"	8 7/16"	10 5/16"	1'-1 1/2"	1'-3 3/8"
Girder 2	△s	0"	7/16"	3/16"	0"	0"	1/16"	0"
	△'s	0"	2 1/16"	3/4"	0"	1/16"	7/16"	0"
	△c	0"	5/16"	1/8"	0"	0"	1/16"	0"
	H	0"	3 7/16"	6 7/8"	8 7/16"	10 5/16"	1'- 0 7/8"	1'-3 3/8"
	Total	0"	6 1/4"	7 15/16"	8 7/16"	10 3/8"	1'-1 7/16"	1'-3 3/8"
Girder 3	△s	0"	3/8"	1/8"	0"	0"	1/16"	0"
	△'s	0"	2"	3/4"	0"	1/16"	7/16"	0"
	△c	0"	5/16"	1/8"	0"	0"	1/16"	0"
	H	0"	3 7/16"	6 7/8"	8 7/16"	10 5/16"	1'-0 7/8"	1'-3 3/8"
	Total	0"	6 1/8"	7 7/8"	8 7/16"	10 3/8"	1'-1 7/16"	1'-3 3/8"
Girder 4	△s	0"	3/8"	1/8"	0"	0"	1/16"	0"
	△'s	0"	1 15/16"	3/4"	0"	1/16"	7/16"	0"
	△c	0"	3/8"	3/16"	0"	0"	1/8"	0"
	H	0"	3 7/16"	6 7/8"	8 7/16"	10 5/16"	1'-0 7/8"	1'-3 3/8"
	Total	0"	6 1/8"	7 15/16"	8 7/16"	10 3/8"	1'-1 1/2"	1'-3 3/8"
Girder 5	△s	0"	0 3/8"	0 1/8"	0"	0"	0 1/16"	0"
	△'s	0"	1 7/8"	0 3/4"	0"	0"	0 3/8"	0"
	△c	0"	0 9/16"	0 1/4"	0"	0"	0 1/8"	0"
	H	0"	3 7/16"	6 7/8"	8 7/16"	10 5/16"	1'-0 7/8"	1'-3 3/8"
	Total	0"	6 1/4"	8"	8 7/16"	10 5/16"	1'-1 7/16"	1'-3 3/8"
Girder 6	△s	0"	0 3/8"	0 1/8"	0"	0"	0 1/16"	0"
	△'s	0"	1 13/16"	0 11/16"	0"	0 1/16"	0 3/8"	0"
	△c	0"	0 1/2"	0 3/16"	0"	0"	0 1/8"	0"
	H	0"	3 7/16"	6 7/8"	8 7/16"	10 5/16"	1'-0 7/8"	1'-3 3/8"
	Total	0"	6 1/8"	7 7/8"	8 7/16"	10 3/8"	1'-1 7/16"	1'-3 3/8"
Girder 7	△s	0"	0 5/16"	0 1/8"	0"	0"	0 1/16"	0"
	△'s	0"	1 3/4"	0 11/16"	0"	0 1/16"	0 7/16"	0"
	△c	0"	0 1/2"	0 3/16"	0"	0"	0 1/8"	0"
	H	0"	3 7/16"	6 7/8"	8 7/16"	10 5/16"	1'-0 7/8"	1'-3 3/8"
	Total	0"	6 "	7 7/8"	8 7/16"	10 3/8"	1'-1 1/2"	1'-3 3/8"
Girder 8	△s	0"	0 5/16"	0 1/8"	0"	0"	0 1/16"	0"
	△'s	0"	1 5/8"	0 5/8"	0"	0 1/16"	0 3/8"	0"
	△c	0"	0 7/16"	0 3/16"	0"	0"	0 1/8"	0"
	H	0"	3 7/16"	6 7/8"	8 7/16"	10 5/16"	1'-0 7/8"	1'-3 3/8"
	Total	0"	5 13/16"	7 13/16"	8 7/16"	10 3/8"	1'-1 7/16"	1'-3 3/8"
Girder 9	△s	0"	0 1/4"	0 1/8"	0"	0"	0 1/16"	0"
	△'s	0"	1 3/8"	0 1/2"	0"	0 1/16"	0 5/16"	0"
	△c	0"	0 3/8"	0 3/16"	0"	0 1/16"	0 1/8"	0"
	H	0"	3 7/16"	6 7/8"	8 7/16"	10 5/16"	1'-0 7/8"	1'-3 3/8"
	Total	0"	5 7/16"	7 11/16"	8 7/16"	10 7/16"	1'-1 3/8"	1'-3 3/8"

△s = Deflection of girder from its own weight after erection including diaphragms, connectors, etc.

△'s = Deflection of girder from dead load of concrete deck slab and bolsters.

△c = Deflection of girder from dead load (e.g. parapet) added after deck slab is cast.

H = Distance between horizontal reference line and deflected top of web at any point being considered.

Not to scale

U.S. DEPARTMENT OF TRANSPORTATION
FEDERAL HIGHWAY ADMINISTRATION
EASTERN FEDERAL LANDS HIGHWAY DIVISION
STERLING, VIRGINIA

FORT BELVOIR - MULLIGAN ROAD
MULLIGAN ROAD OVER PINEY RUN

CAMBER DIAGRAM

DET. E555-D

6/19/2008 11:06:21 AM C:\PWworking\PITT\dms96131\sgcam2cdgn

REG	STATE	PROJECT	SHEET NO.
-	VA	VA-A-AD-48(1)	R50

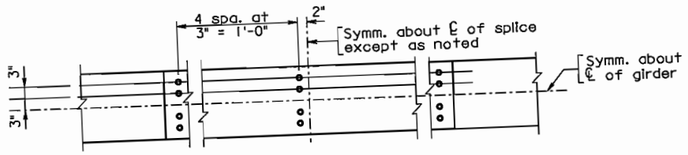

TOP FLANGE

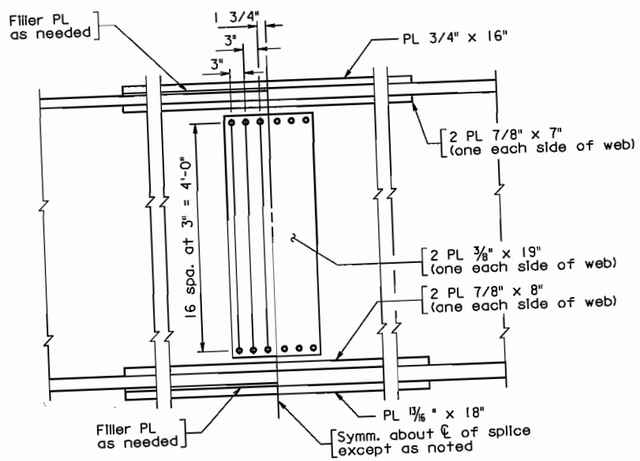

WEB

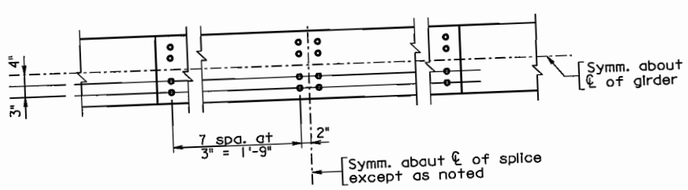

BOTTOM FLANGE

BOLTED SPLICE DETAILS

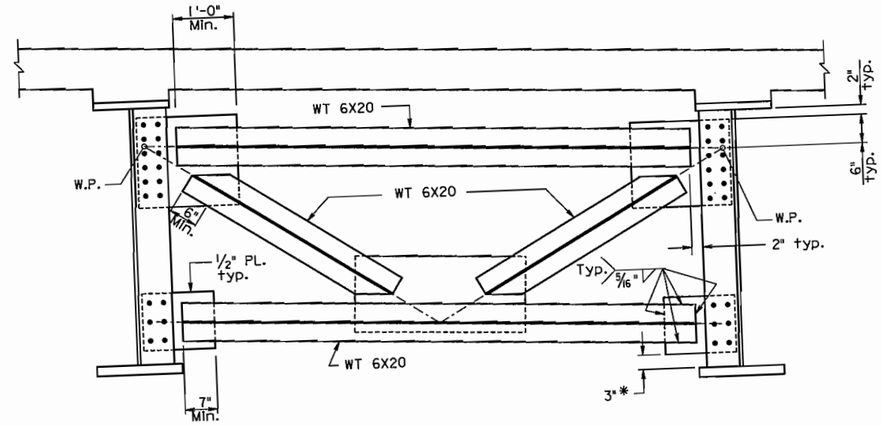

CROSS FRAME - CF1

* Dimension shall be 6" at piers.

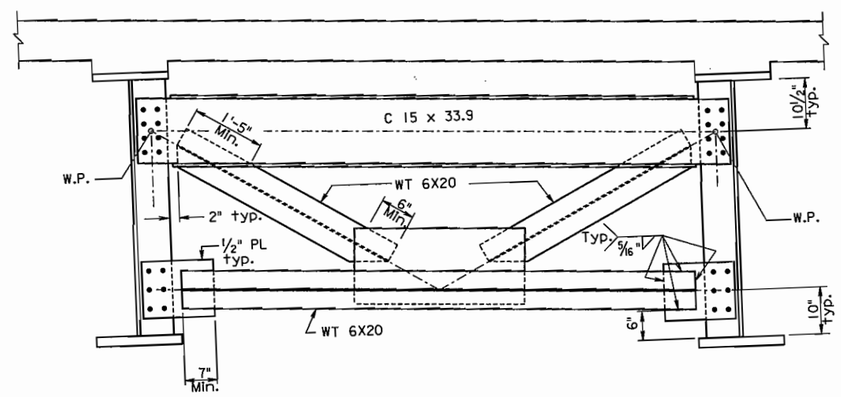

CROSS FRAME - CF3

Bolted Splice Notes:

Stud shear connectors on top flange not shown. For spacing, see girder details, sheet R53.

Field splice bolts shall be 7/8" dia. ASTM A325 bolts.

Oversize or slotted holes shall not be permitted.

Cross Frame Notes:

Bolts shall be 7/8" dia. ASTM A325 bolts.

Cross frams for curved girders are considered main members (primary members), choppy V-notch testing is required for all members and gusset plates..

All welding of structural steel and quality control inspection of welds, including field welding and quality control inspection of field welding, shall be the responsibility of the Contractor in accordance with Section 407.04(1) of the Specifications.

Not to scale

U.S. DEPARTMENT OF TRANSPORTATION
FEDERAL HIGHWAY ADMINISTRATION
EASTERN FEDERAL LANDS HIGHWAY DIVISION
STERLING, VIRGINIA

FORT BELVOIR - MULLIGAN ROAD
MULLIGAN ROAD OVER PINEY RUN

BOLTED SPLICE AND CROSS FRAME DETAILS

DET. E555-E

6/19/2008 11:07:13 AM C:\PWworking\PITT\dms96131\sgbspl.dgn

REG	STATE	PROJECT	SHEET NO.
-	VA	VA-A-AD-48(1)	R51

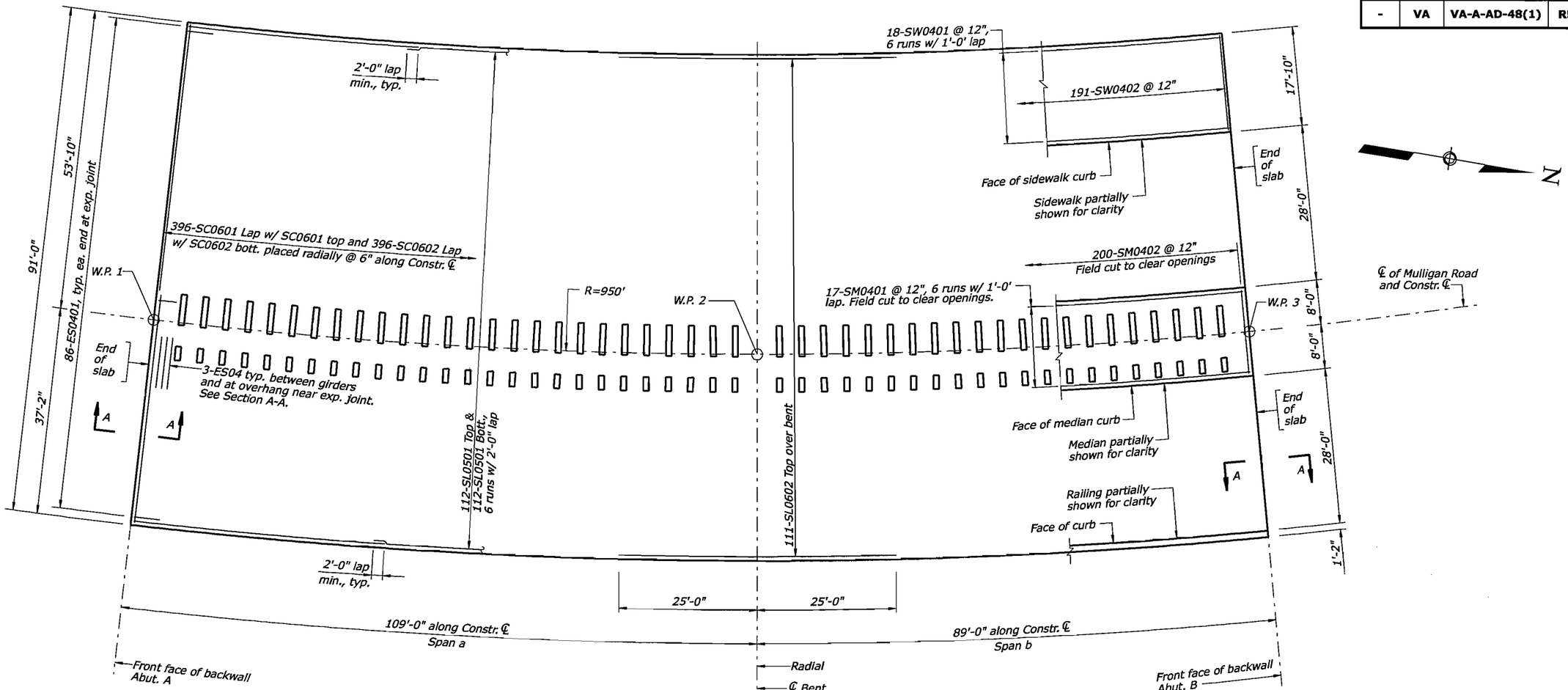

Deck Plan

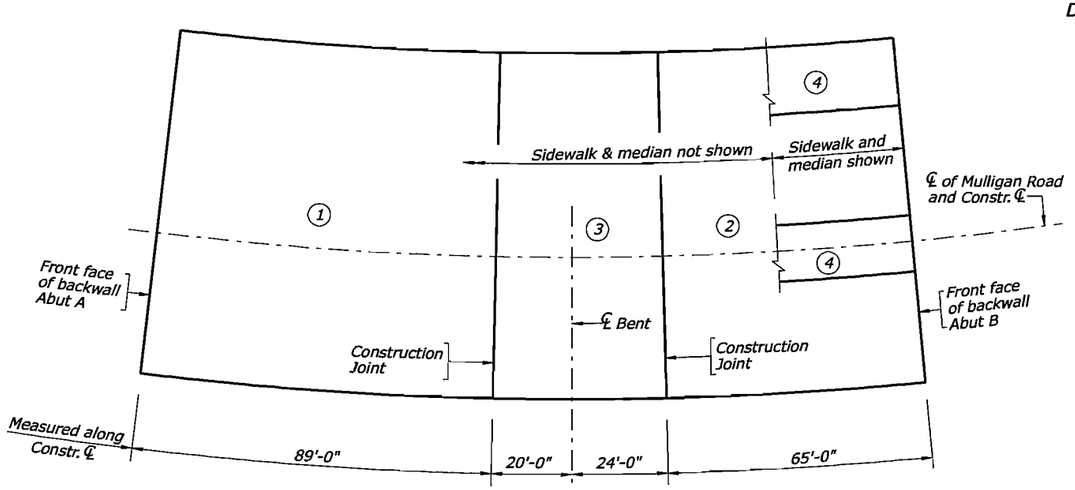

Deck Slab Concrete Placement Schedule

Scale: 1' = 20'

Note: The numbers shown indicate the order of concrete placement in deck sections

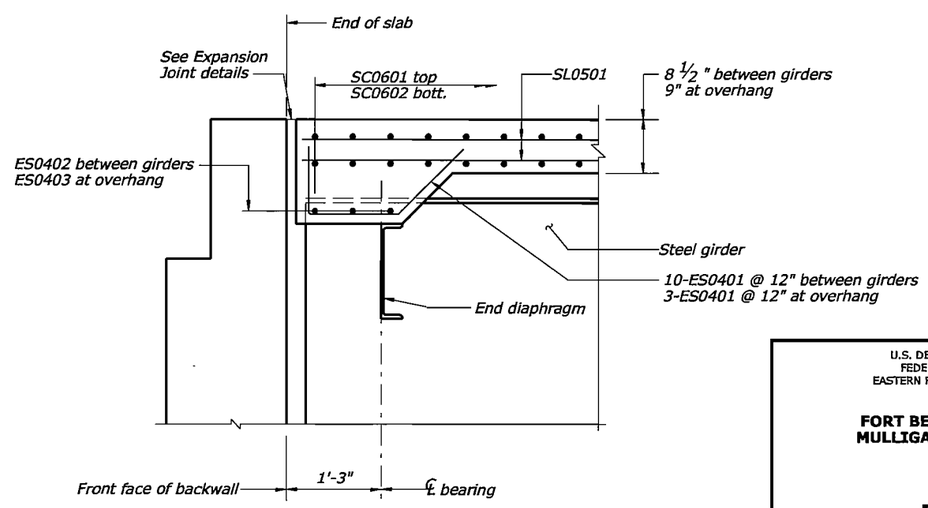

Section A-A

Not to scale

0 10 20
SCALE IN FEET

U.S. DEPARTMENT OF TRANSPORTATION
FEDERAL HIGHWAY ADMINISTRATION
EASTERN FEDERAL LANDS HIGHWAY DIVISION
STERLING, VIRGINIA

FORT BELVOIR - MULLIGAN ROAD
MULLIGAN ROAD OVER PINEY RUN

DECK PLAN

6/18/2008 2:44:06 PM C:\PwWorking\PITT\dms96131\Deck_Plan.dgn

REG	STATE	PROJECT	SHEET NO.
-	VA	VA-A-AD-48(1)	R52

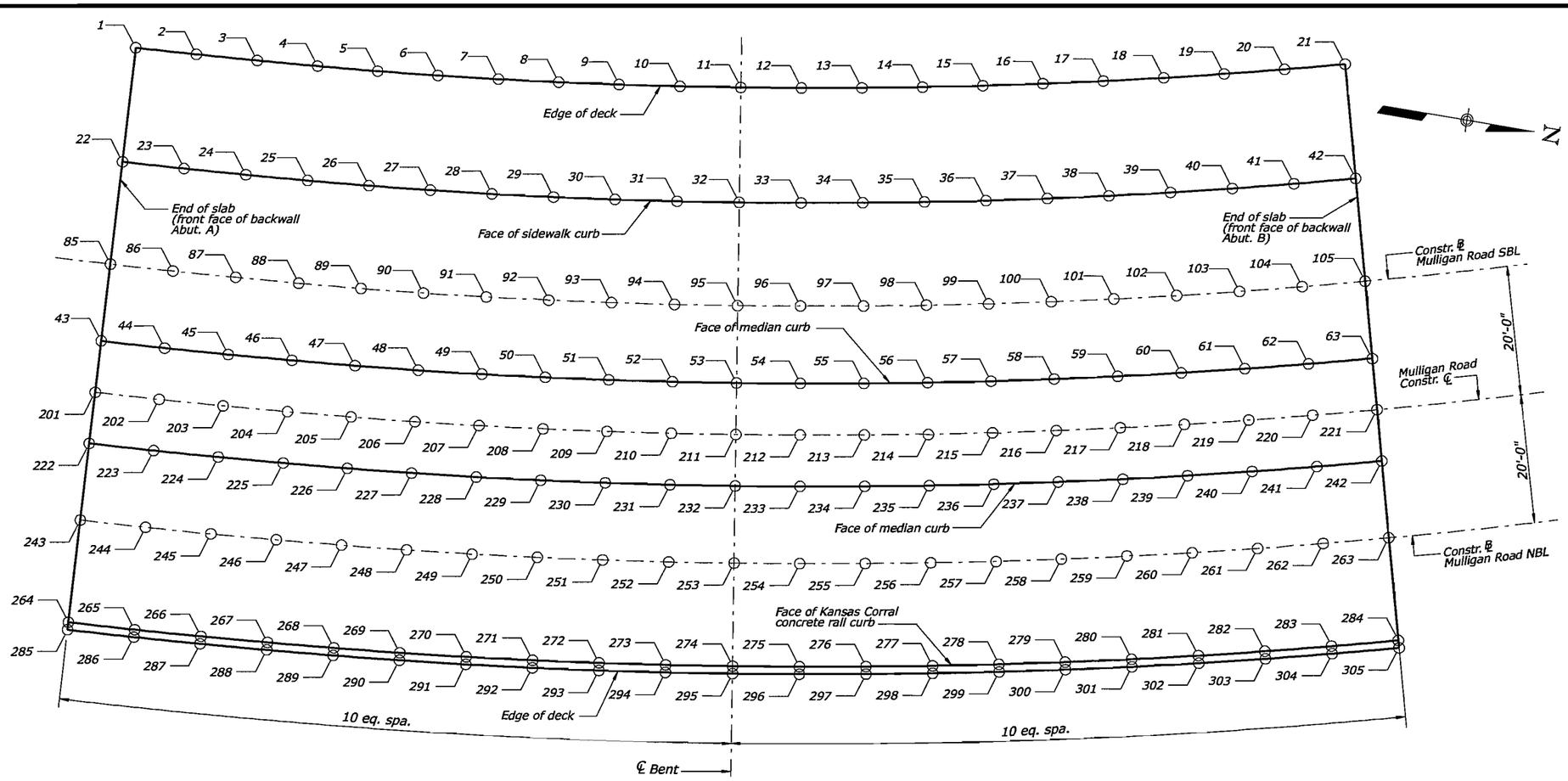

Notes:

Slab elevations as shown in table are on top of finished grade of the deck along the faces of curb, edges of slab, and construction baselines and centerline. Refer to Transverse Section Detail sheets R43 and R44 to obtain top of sidewalk and median elevations.

Deck Elevations

Not to Scale

Point	Elevation	Point	Elevation	Point	Elevation	Point	Elevation	Point	Elevation	Point	Elevation	Point	Elevation	Point	Elevation	Point	Elevation
1	70.46	22	71.14	43	72.20	85	71.74	201	72.50	222	72.81	243	73.26	264	73.87	285	73.92
2	70.53	23	71.21	44	72.27	86	71.82	202	72.58	223	72.88	244	73.34	265	73.94	286	73.99
3	70.60	24	71.28	45	72.34	87	71.89	203	72.65	224	72.95	245	73.41	266	74.01	287	74.06
4	70.67	25	71.35	46	72.41	88	71.96	204	72.72	225	73.02	246	73.48	267	74.09	288	74.13
5	70.74	26	71.42	47	72.49	89	72.03	205	72.79	226	73.09	247	73.55	268	74.16	289	74.20
6	70.82	27	71.49	48	72.56	90	72.10	206	72.86	227	73.16	248	73.62	269	74.23	290	74.27
7	70.89	28	71.56	49	72.63	91	72.17	207	72.93	228	73.24	249	73.69	270	74.30	291	74.34
8	70.96	29	71.64	50	72.70	92	72.24	208	73.00	229	73.31	250	73.76	271	74.37	292	74.42
9	71.03	30	71.71	51	72.77	93	72.31	209	73.07	230	73.38	251	73.83	272	74.44	293	74.49
10	71.10	31	71.78	52	72.84	94	72.39	210	73.15	231	73.45	252	73.91	273	74.51	294	74.56
11	71.17	32	71.85	53	72.91	95	72.46	211	73.22	232	73.52	253	73.98	274	74.59	295	74.63
12	71.23	33	71.91	54	72.97	96	72.52	212	73.28	233	73.58	254	74.04	275	74.64	296	74.69
13	71.29	34	71.97	55	73.03	97	72.57	213	73.33	234	73.64	255	74.09	276	74.70	297	74.75
14	71.35	35	72.02	56	73.09	98	72.63	214	73.39	235	73.70	256	74.15	277	74.76	298	74.80
15	71.40	36	72.08	57	73.15	99	72.69	215	73.45	236	73.75	257	74.21	278	74.82	299	74.86
16	71.46	37	72.14	58	73.20	100	72.75	216	73.51	237	73.81	258	74.27	279	74.88	300	74.92
17	71.52	38	72.20	59	73.26	101	72.81	217	73.57	238	73.87	259	74.33	280	74.93	301	74.98
18	71.58	39	72.26	60	73.32	102	72.86	218	73.62	239	73.93	260	74.38	281	74.99	302	75.04
19	71.64	40	72.32	61	73.38	103	72.92	219	73.68	240	73.99	261	74.44	282	75.05	303	75.10
20	71.70	41	72.37	62	73.44	104	72.98	220	73.74	241	74.05	262	74.50	283	75.11	304	75.15
21	71.75	42	72.43	63	73.50	105	73.04	221	73.80	242	74.10	263	74.56	284	75.17	305	75.21

U.S. DEPARTMENT OF TRANSPORTATION
FEDERAL HIGHWAY ADMINISTRATION
EASTERN FEDERAL LANDS HIGHWAY DIVISION
STERLING, VIRGINIA

FORT BELVOIR - MULLIGAN ROAD
MULLIGAN ROAD OVER PINEY RUN

DECK SLAB ELEVATIONS

6/18/2008 2:43:40 PM C:\PwWorking\PITT\dms9613\Deck_Elevations.dgn

REG	STATE	PROJECT	SHEET NO.
-	VA	VA-A-AD-48(1)	R53

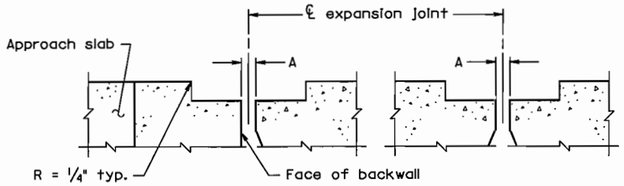

AT ABUTMENT AT PIER
SECTION THROUGH JOINT RECESS

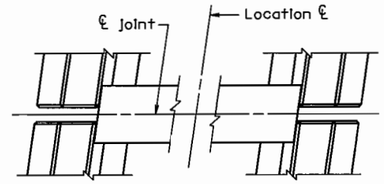

PLAN ELASTOMERIC EXPANSION DAM
Skewed crossing under 10°

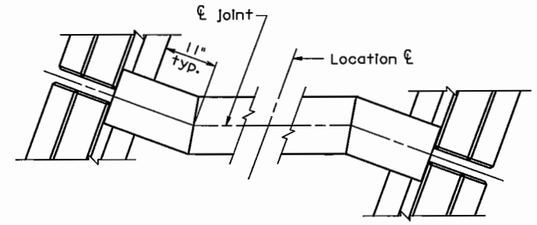

PLAN ELASTOMERIC EXPANSION DAM
Skewed crossing over 10°

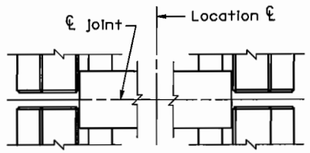

PLAN ELASTOMERIC EXPANSION DAM
Straight crossing

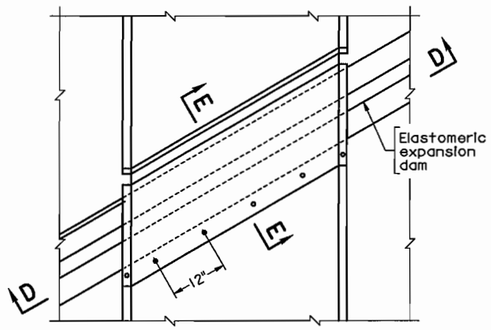

PLAN AT RAISED MEDIAN
(Any Skew)

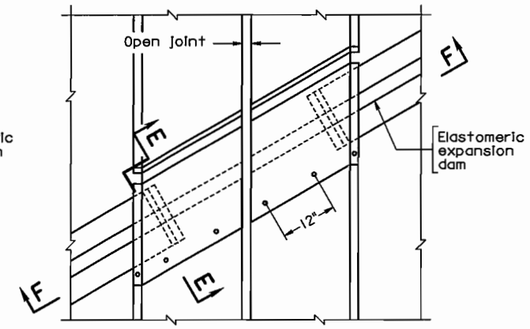

PLAN AT RAISED MEDIAN WITH LONGITUDINAL JOINT
(Any Skew)

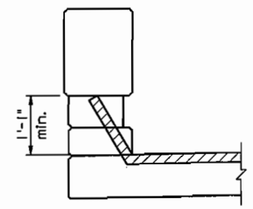

PARAPET SECTION
On ℄ expansion joint

Notes:

Shop drawings of the type of dam(s) selected and corresponding slab opening(s) and anchor details shall be submitted to the Engineer for review in accordance with these details and Section 104.03 of the Specifications.

Top of dam shall be set below top of slab in accordance with manufacturer's recommendation or 1/8", whichever is greater.

Concrete shall be placed beneath the dam in such a manner as to prevent the formation of air pockets in the concrete.

All bolts, nuts, washers and cap screws shall be ASTM A276, Type 304 stainless steel.

Non-stainless ferrous metal shall be ASTM A709, Grade 36 and shall be painted in accordance with Section 411 of the Specifications.

Completely welded curb and gutter sections shall be furnished for Types F2 and I.

Steel sections shall be furnished in minimum lengths of 18' and shall be field welded into continuous sections. Welds shall be ground smooth in areas where they will be in contact with the elastomer.

Where the total length of the joint is less than 40', the minimum length of steel sections shall be half of the total length of the joint.

Elastomeric gland material shall conform to Section 574 of the Specifications. Fabric reinforcement shall be a nonwicking woven polyester material.

Dam Proprietary Nomenclature:

Type F2 = Acme Strip Seal, On-Flex Strip Seal (Structural Accessories), Steelflex SSC-M (D.S.Brown), E-Poxy Industries S400, & R. J. Watson RJM Strip Seal
Type I = Nonproprietary

Abutment	Pier	Types allowed	A (at 60°F)	t	Total Movement	Skew Angle
A		F2 or I	1 1/2"	1/16"	1"	0
B		F2 or I	1 1/2"	1/16"	1"	0

"A" shall be increased or decreased for every 10°F temperature drop or rise respectively by "t". "A" is measured perpendicular to the joint centerline.

Total movement is the movement the dam must be capable of providing to allow for the effects of temperature changes, girder end rotation under live load and racking caused by the skew angle.

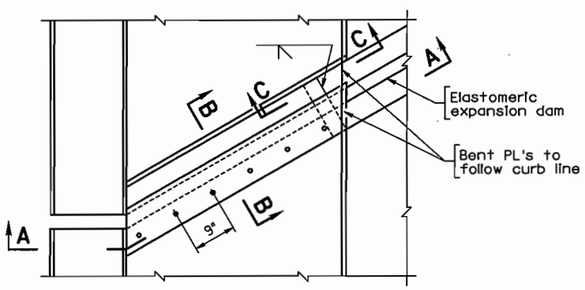

PLAN AT SIDEWALK
Any Skew

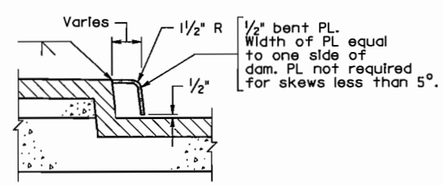

SECTION C-C

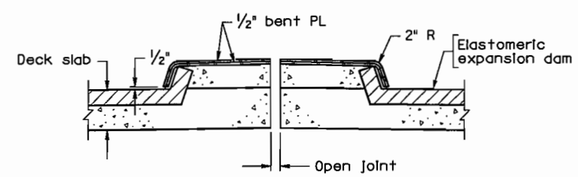

SECTION F-F

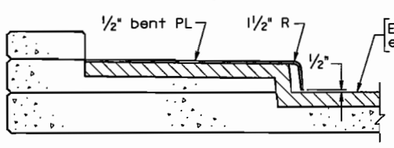

SECTION A-A

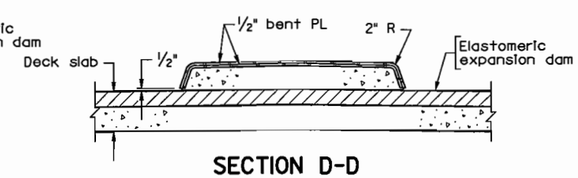

SECTION D-D

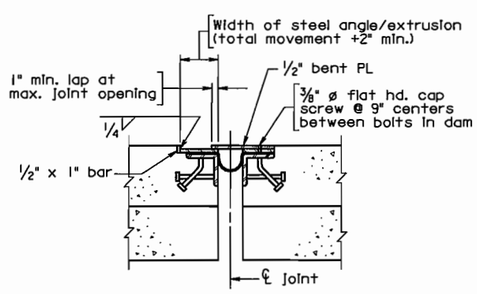

SECTION B-B

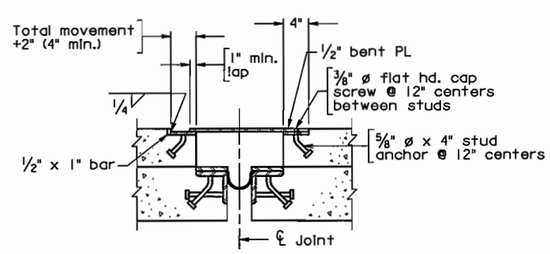

SECTION E-E

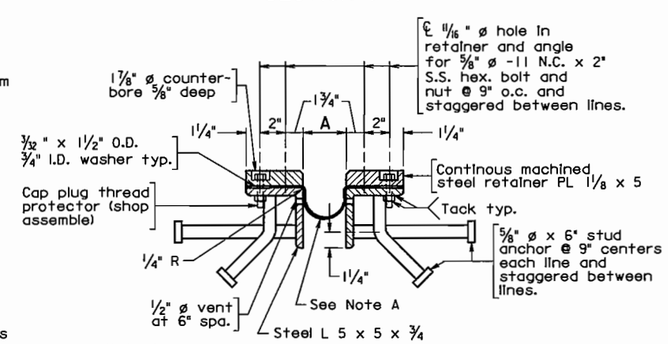

Note A:

1/8" thick continuous synthetic fabric reinforced sheet elastomeric gland: Constant width = 14", 50 or 60 Durometer, and punch 1 1/2" ø holes through gland to match bolt locations.

TYPE I
TYPES OF EXPANSION DAMS

Not to scale

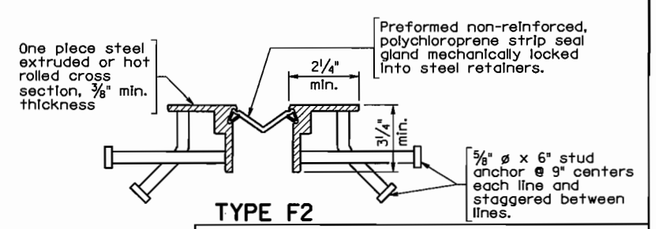

TYPE F2

U.S. DEPARTMENT OF TRANSPORTATION
FEDERAL HIGHWAY ADMINISTRATION
EASTERN FEDERAL LANDS HIGHWAY DIVISION
STERLING, VIRGINIA

FORT BELVOIR - MULLIGAN ROAD
MULLIGAN ROAD OVER PINEY RUN

ELASTOMERIC EXPANSION DAM

DET. E555-A

6/19/2008 11:08:01 AM C:\PWworking\PITT\dms9613\de13.dgn

REG	STATE	PROJECT	SHEET NO.
-	VA	VA-A-AD-48(1)	R54

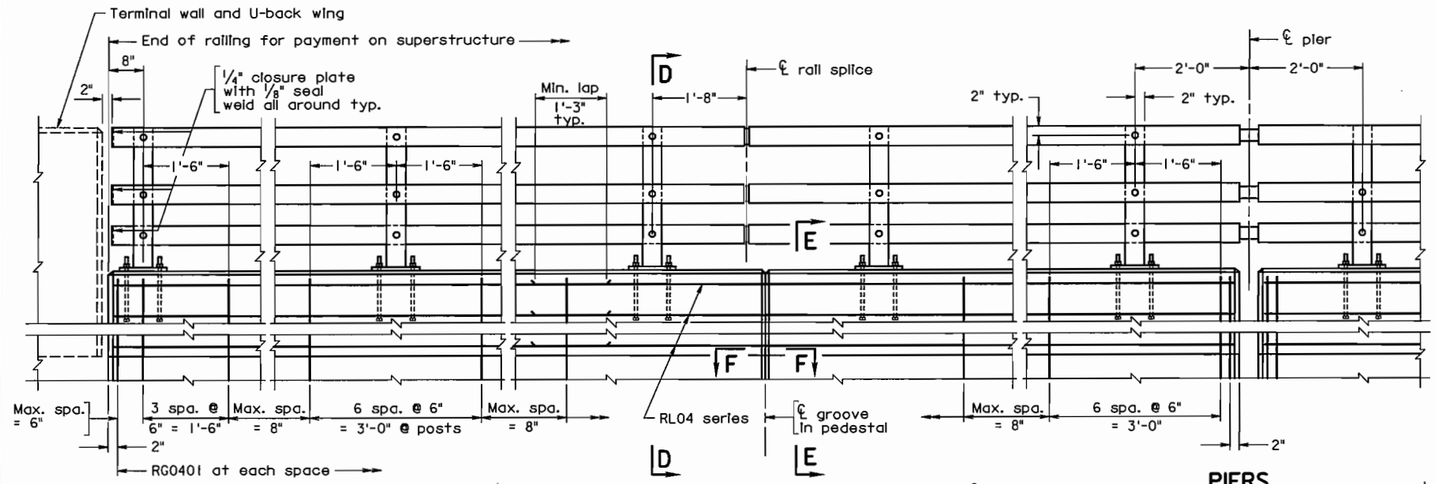

ABUTMENTS

ELEVATION

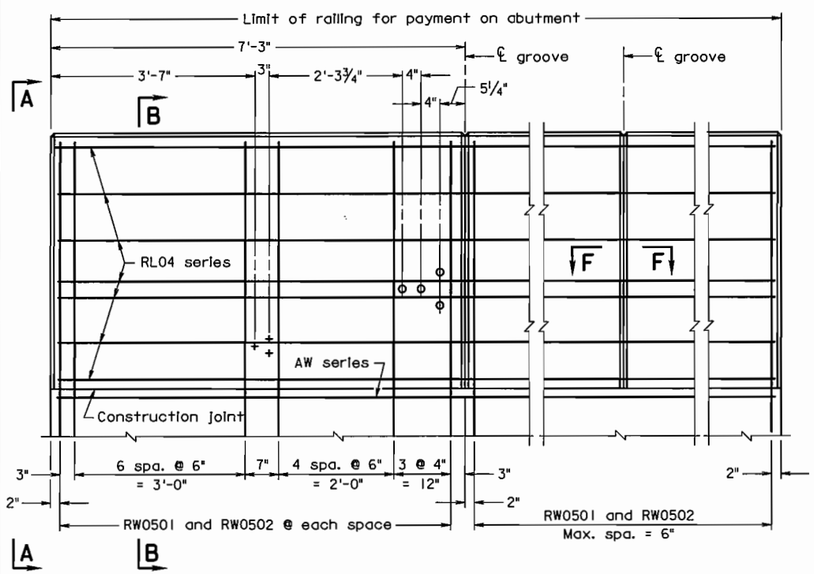

TERMINAL WALL

U-BACK WING

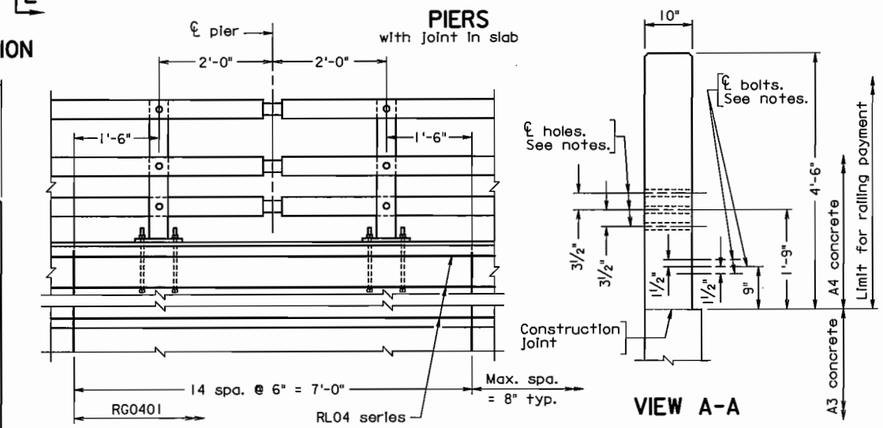

PIERS
with joint in slab

PIERS
Continuous - without joint in slab

VIEW A-A

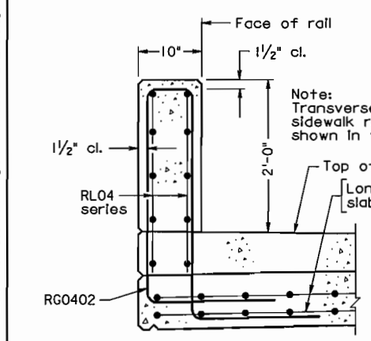

SECTION E-E
Scale: 1" = 1'-0"

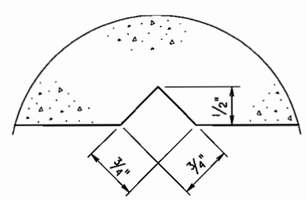

SECTION F-F
Full scale

Groove detail for both sides of rail

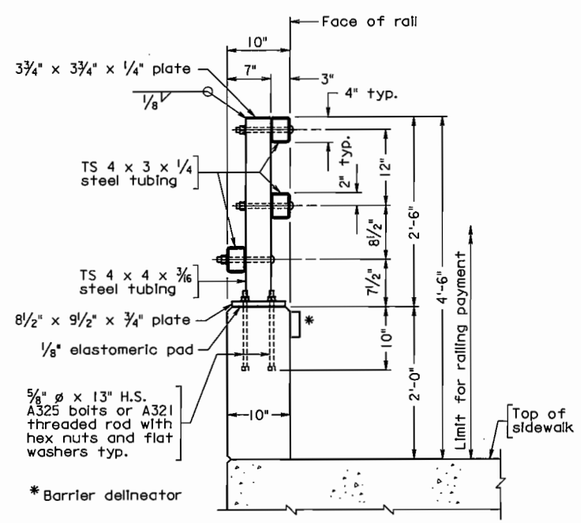

SECTION D-D
Scale: 1" = 1'-0"

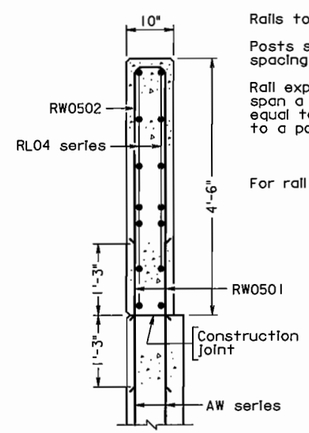

SECTION B-B

Scale: 3/4" = 1'-0" unless otherwise noted.

Notes:

Reinforcing bars RG0401, RG0402, RW0501 and RW0502 shall be galvanized. All other reinforcing bars shall be epoxy coated.

All concrete shall be Class A(AE), fc' = 4000 psi.

All bevels for concrete on this sheet shall be 3/4".

Plates shall be ASTM A36 steel.

Posts and rail members shall be ASTM A500 Grade B steel. Steel pipe sleeves shall be ASTM A53. Bolts, nuts and washers shall be ASTM A325. All steel shall be hot dip galvanized.

Posts shall be seated on neoprene pads 1/8" minimum thickness, having a nominal durometer hardness of 60. Pads shall conform to post base dimensions.

Bolts for attaching rails to posts are 1/2" diameter round head (with slot in head) with hex nut and washer. Holes in post and railing tubing shall be 5/8" diameter. Bolt extension beyond nut shall be limited to 1/4". Galvanized metal cap shall cover nut and bolt extension.

Cut bottom of posts to match cross slope before welding so that posts will be vertical. Steel shims may be used for adjusting post alignment, maximum thickness of shim build-up not to exceed 1/8". Where more tilting of the post is required, the concrete shall be ground down.

Anchor bolts may be set normal to profile grade.

For details of wingwall below construction joint, see abutment sheet(s).

Terminal walls are detailed to take guardrail attachment GR-F0A-1.

Holes, where shown, shall be formed with sleeves of 1 1/2" diameter nominal pipe.

Bolts for guardrail attachment where shown shall be 5/8" diameter expansion anchor bolts 6" long to be drilled and installed when rub rail is attached.

Bid item for railing shall include rails, rail posts, bearing pads, anchor assemblies, sleeves and other associated metal parts as shown on the plans. Also included in bid item are concrete noted in plans and reinforcing steel indicated in Reinforcing Steel Schedule.

Barrier delineator size, color, and spacing to be in accordance with the Specifications. Cost of delineator to be included in the price bid for railing. Reflective surface of barrier delineator, in all instances, to be facing oncoming traffic.

1/2" diameter drain holes shall be provided in both top and bottom rails approximately half-way between posts except at open joints near pier(s). Drain holes shall be provided at each low end of rail.

Spacing of grooves for U-back wings to be approximately 8'-0". Maximum spacing of grooves in pedestal shall be limited to 3 x post spacing, shall be centered between posts and shall be no closer than 10'-0" to joints.

The Contrator shall determine all dimensions and details necessary for installation.

Fabricator's notes:

Rails to be continuous over a minimum of 3 posts before splicing.

Posts shall be equally spaced. Maximum spacing is 7'-0". Minimum spacing is 6'-6".

Rail expansion joint shall be provided between any two posts which span a bridge expansion joint. Dimension A for expansion joints is equal to deck joint opening + 1". Bolts in slot shall be tightened only to a point that will allow railing movement.

For rail splice details and rail expansion joint details, see sheet R55.

U.S. DEPARTMENT OF TRANSPORTATION
FEDERAL HIGHWAY ADMINISTRATION
EASTERN FEDERAL LANDS HIGHWAY DIVISION
STERLING, VIRGINIA

FORT BELVOIR - MULLIGAN ROAD
MULLIGAN ROAD OVER PINEY RUN

STEEL RAILING BR27C

Sheet 1 of 2

DET. E556-A

6/19/2008 11:25:07 AM C:\PWworking\PITT\dms96\3\br27c10.dgn

REG	STATE	PROJECT	SHEET NO.
-	VA	VA-A-AD-48(1)	R55

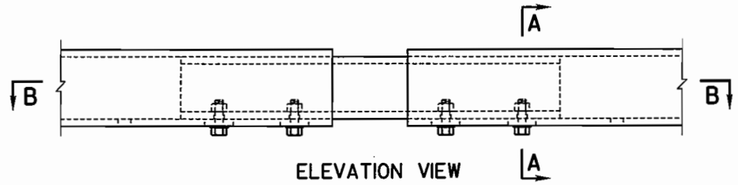

ELEVATION VIEW

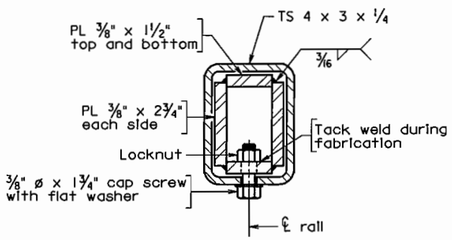

SECTION A-A
SECTION AT RAIL SPLICE

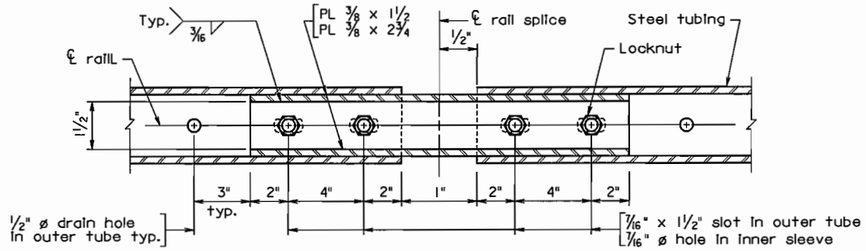

SECTION B-B

RAIL SPLICE DETAILS

Note:

Details shown for top rail. Details for bottom rail similar.

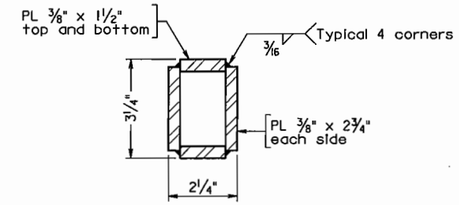

FINISHED DIMENSIONS OF INNER SLEEVE RAIL

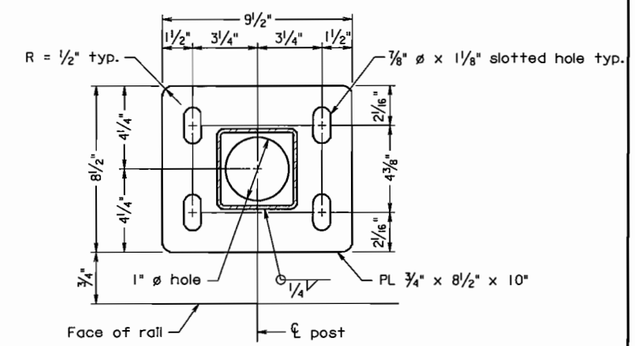

BASE PLATE DETAIL

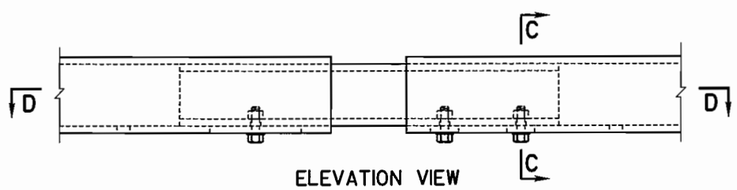

ELEVATION VIEW

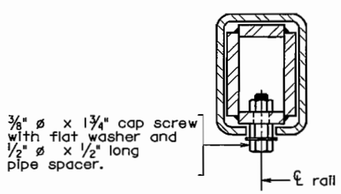

SECTION C-C
Details not shown similar to Section A-A

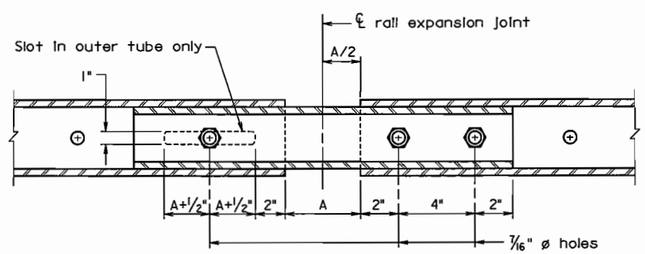

SECTION D-D
For details and dimensions not shown, see Section B-B.

RAIL EXPANSION JOINT DETAILS

REINFORCING STEEL SCHEDULE

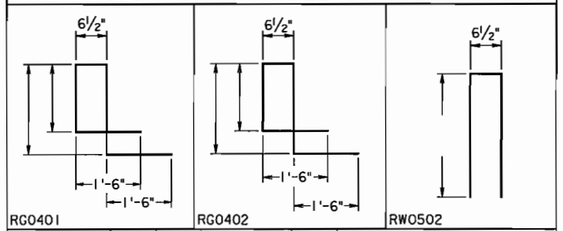

Mark	Size	No.	Length	Pin ø	Location
RG0401	#4			3"	Parapet
RG0402	#4			3"	Parapet
RW0501	#5		2'-6"	—	Terminal wall and wing
RW0502	#5			3 3/4"	Terminal wall and wing
RL04	#4			—	Parapet and terminal wall

Dimensions in bending diagram are out-to-out of bars.

Not to scale

U.S. DEPARTMENT OF TRANSPORTATION
FEDERAL HIGHWAY ADMINISTRATION
EASTERN FEDERAL LANDS HIGHWAY DIVISION
STERLING, VIRGINIA

FORT BELVOIR - MULLIGAN ROAD
MULLIGAN ROAD OVER PINEY RUN

STEEL RAILING BR27C

Sheet 2 of 2 | **DET. E556-A**

6/19/2008 11:25:48 AM C:\PWworking\PITT\dms9613\br27c3.dgn

REG	STATE	PROJECT	SHEET NO.
-	VA	VA-A-AD-48(1)	R56

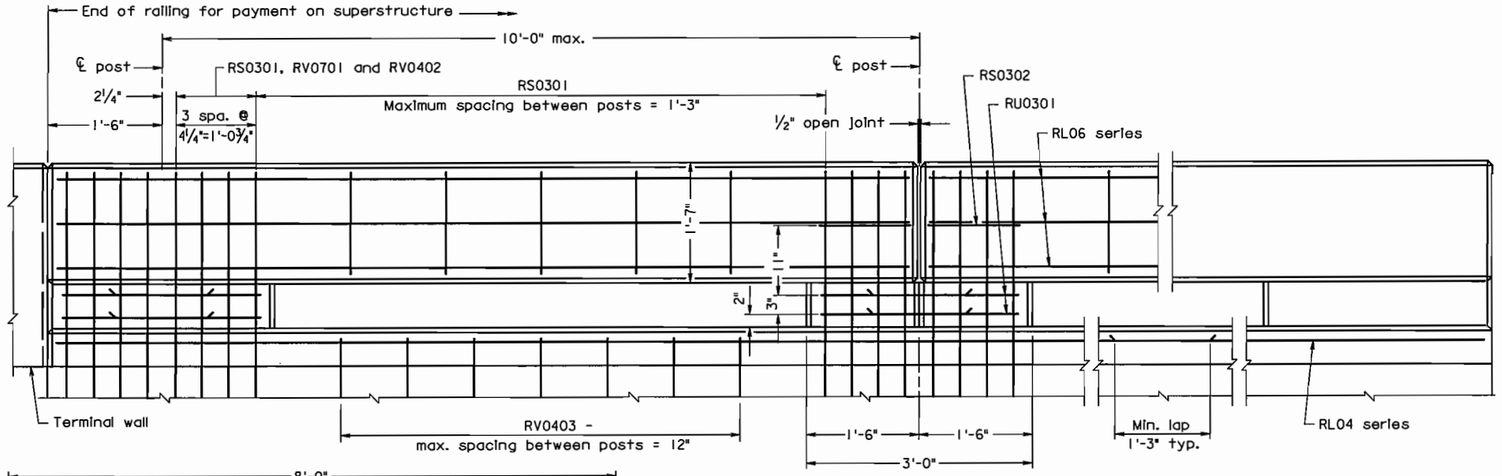

TYPICAL ELEVATION

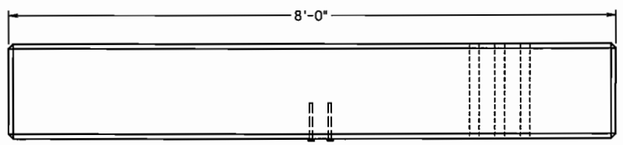

PLAN - TERMINAL WALL

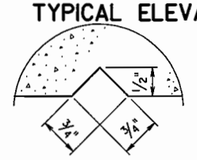

SECTION C-C
Not to scale
Groove detail for both sides of curb

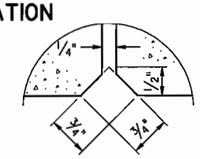

SECTION D-D
Not to scale
Deflection joint detail for both sides of rail and post

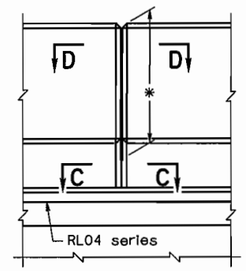

PIERS
Slab continuous over pier
*Open deflection joint 1'-9" deep

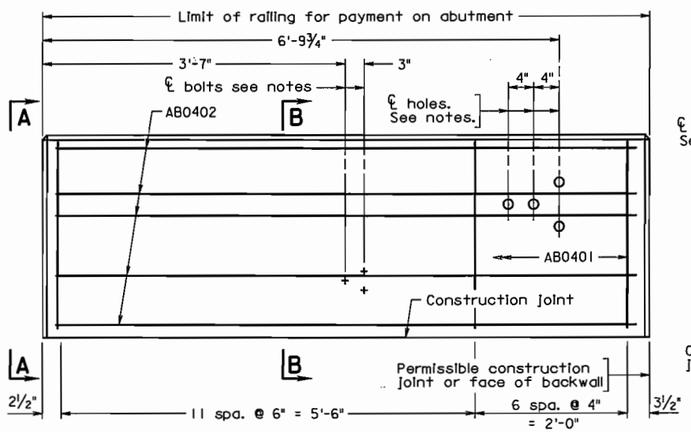

ELEVATION - TERMINAL WALL

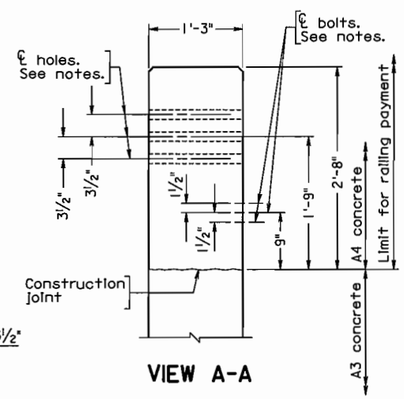

VIEW A-A

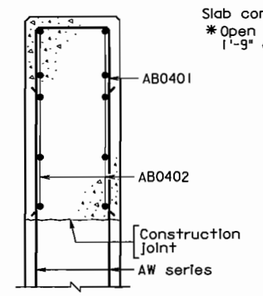

SECTION B-B

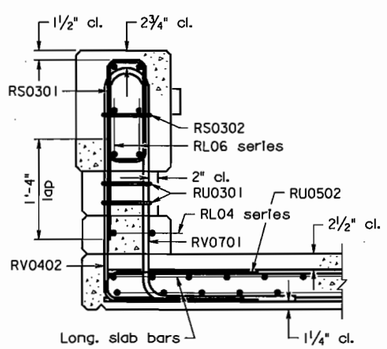

DECK SLABS

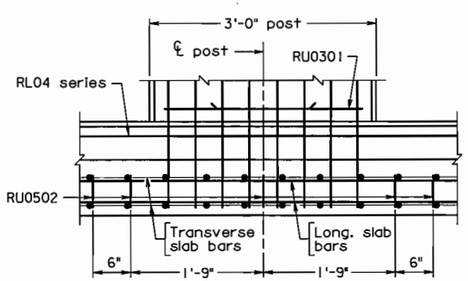

ELEVATION SHOWING RU0502 PLACEMENT DECK SLABS

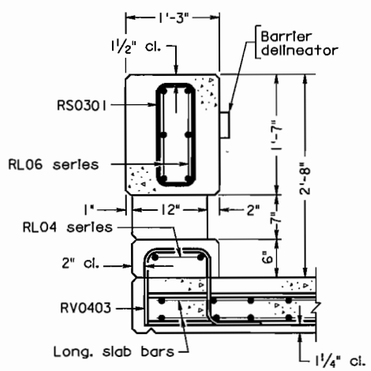

TYPICAL SECTION BETWEEN POSTS

Notes:

Reinforcing bars RV0701, RV0402 and RV0403 shall be galvanized. All other reinforcing bars shall be epoxy coated. RL0401 bars are not required for deck slabs. RU0502 bars are not required for slab spans.

Barrier delineator size, color, and spacing to be in accordance with the Specifications. Cost of delineator to be included in the price bid for railing. Reflective surface of barrier delineator, in all instances, to be facing oncoming traffic.

The Contractor shall determine all dimensions and details necessary for installation.

Each terminal wall shall be cast as one piece.

For details of wingwall below construction joint, see abutment sheets.

Terminal walls are detailed to take guard rail attachment GR-F0A-1.

All bevels for concrete on this sheet shall be ¾". Rounded edges with 1" radius may be used in lieu of bevels along top of terminal wall and railing.

Holes, where shown, shall be formed with sleeves of 1½" diameter nominal pipe.

Bolts, where shown, shall be ⅝" dia. expansion anchor bolts, 6" long to be drilled and installed when rub rail is attached.

All concrete shall be Class A(AE), fc' = 4000 psi.

Bid item for railing shall include concrete noted in plans and reinforcing steel indicated in Reinforcing Steel Schedule.

REINFORCING STEEL SCHEDULE

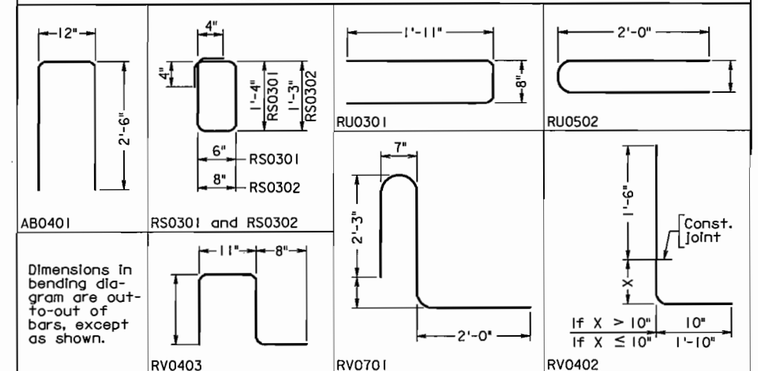

Mark	No.	Size	Pin ø	Length	Location
AB0401		#4	3"	5'-10"	Terminal wall
AB0402		#4	——	7'-9"	Terminal wall
RL0401		#4	——	6'-6"	Slab at posts
RL04		#4	——		Curb
RL06		#6	——		Rail
RS0301		#3	2¼"	3'-11"	Rail
RS0302		#3	2¼"	4'-1"	Posts
RU0301		#3	2¼"	4'-4"	Posts
RU0502		#5			Slab at posts
RV0701		#7	5¼"		Posts
RV0402		#4	3"		Posts
RV0403		#4	2"		Curb

Gross concrete quantities above roadway slab :
Railing : C.Y. = Lin. ft. x 0.103

U.S. DEPARTMENT OF TRANSPORTATION
FEDERAL HIGHWAY ADMINISTRATION
EASTERN FEDERAL LANDS HIGHWAY DIVISION
STERLING, VIRGINIA

FORT BELVOIR - MULLIGAN ROAD
MULLIGAN ROAD OVER PINEY RUN

CAST-IN-PLACE CONCRETE RAILING (32" KANSAS CORRAL)

DET. E556-B

Scale: 1" = 1'-0", unless otherwise shown.

6/19/2008 11:26:55 AM C:\PWworking\PITT\dms9613\bar3.dgn

REG	STATE	PROJECT	SHEET NO.
-	VA	VA-A-AD-48(1)	R57

POINTS	PICK UP POINTS
1	0.292L, 0.708L; L
2	0.207L, 0.586L, 0.207L; L
3	0.145L, 0.355L, 0.355L, 0.145L; L
4	0.107L, 0.262L, 0.262L, 0.262L, 0.107L; L

Unless special lifting devices are attached for pick-up, pick-up points shall be plainly marked on all piles after removal of the forms. The pile shall be supported only at the indicated pick-up points while in storage or while being handled.

The use of proper rigging is required to insure that the pick-up points remain in a straight line during lifting and when positioning the pile for driving.

The use of special embedded or attached lifting devices, the employment of other pick-up points or any other method of pick-up shall be subject to approval by the Engineer.

PILE PICK-UP DATA

Pile size	Approx. Wt. per LF	Maximum lengths for various pick-up systems			
		1-Point	2-Point	3-Point	4-Point
W	Lbs.	L	L	L	L
10"	140	47'	66'	95'	129'
12"	150	51'	73'	104'	141'
14"	204	55'	78'	112'	152'
16"	267	62'	88'	126'	171'
18"	338	64'	90'	129'	175'
20"	417	69'	97'	138'	188'
24"	600	72'	102'	146'	198'

Maximum lengths are determined from impact loads. L is the maximum pick-up length based on a concrete compressive strength of 5000 psi. If piles are picked up when concrete strength is less than 5000 psi, the maximum pick-up length shall be the tabulated length reduced by 1% for every 250 psi below 5000 psi.

PILE DATA

Pile size W (In.)	Strand pattern	Total no. of strands in pile	Diameter of strands In.	Strand spacings M	Strand spacings N	Prestressing force per strand pounds	Effective prestress after losses psi
10"	Square	4	1/2	1	1	28,910	966
	Circular	4	1/2	—	—	28,910	966
12"	Square	4	1/2	1	1	30,970	751
	Circular	4	1/2	—	—	30,970	751
14"	Square	6	1/2	2	1	30,970	820
	Circular	6	1/2	—	—	30,970	820
16"	Square	8	1/2	2	2	30,970	836
	Circular	8	1/2	—	—	30,970	836
18"	Square	10	1/2	3	2	30,970	826
	Circular	10	1/2	—	—	30,970	826
20"	Square	12	1/2	3	3	30,970	805
	Circular	12	1/2	—	—	30,970	805
24"	Square	16	1/2	4	4	30,970	751
	Circular	16	1/2	—	—	30,970	751

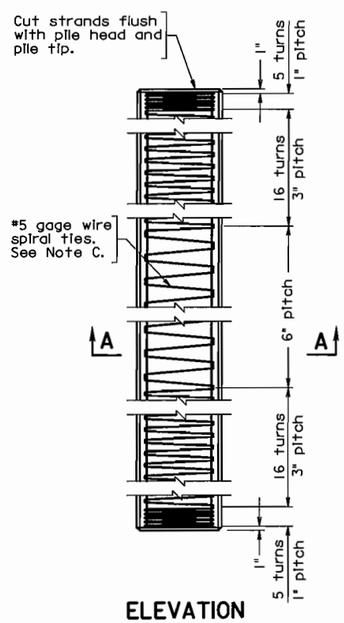

ELEVATION

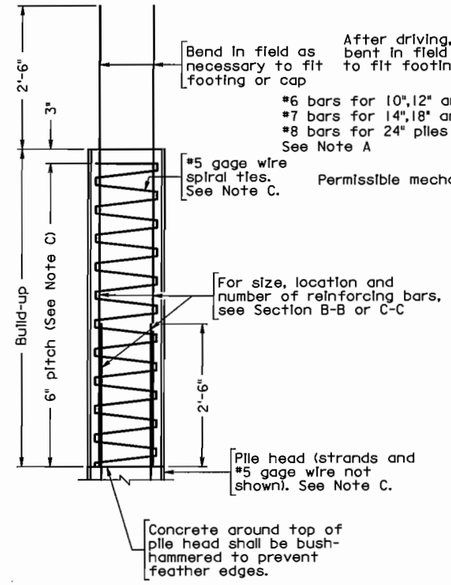

BUILD-UP WITHOUT DRIVING

See Note B

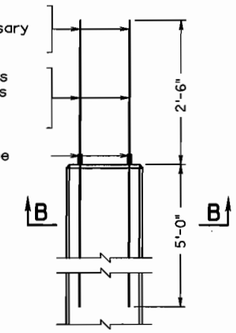

ELEVATION

Strands and #5 gage wire not shown

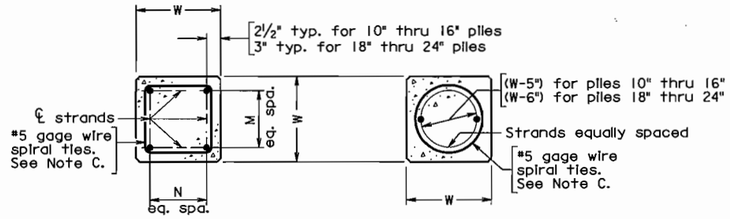

SQUARE CIRCULAR

SECTION A-A: STRAND PATTERN FOR PILE

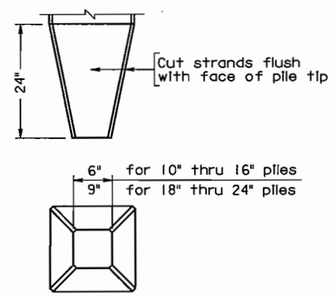

PILE TIP

Pile tip(s) shall be used only when specified. Strands not shown.

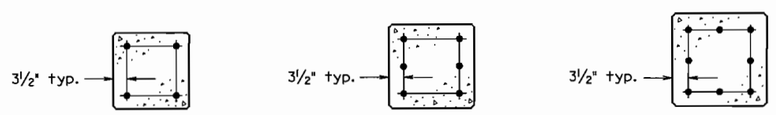

10", 12" and 14" PILES 16" and 18" PILES 20" and 24" PILES

SECTION B-B: PILE HEAD

See Note B

Note:

All concrete shall be Class P having a minimum compressive cylinder strength at 28 days equal to 5000 psi and a minimum compressive cylinder strength at time of release of strands equal to 3500 psi.

All strands shall be low relaxation and shall have an ultimate strength of 270 ksi.

Deformed reinforcing bars shall conform to ASTM A615, Grade 60.

One splice will be permitted where the length of pile required is greater than the maximum for 2-point pick-up unless specifically prohibited.

Build-ups shall be used only with written permission by the Engineer and then only after driving is complete.

Subject to approval by the Engineer, the bars projecting from the pile head may be cut prior to driving and reweldeed upon completion of driving. The method of welding used shall develop the tensile strength of the bar.

Mechanical splices for reinforcing bars shall be in accordance with Section 554.09 of the Specifications. The Contractor shall provide adequate shielding to protect the ends of the reinforcing bars until the pile is driven and the bars are spliced.

When pile cut-off is greater than 2'-6" at least 30 inches of all the strands shall project into the cap or footing to serve for anchorage.

Where piles are exposed in bridges over tidal water such as in pile bents and in footings constructed above Mean High Tide elevation, the spiral ties and all other mild reinforcing steel in the pile shall be epoxy coated or hot dip galvanized.

Note A:
In lieu of the reinforcing bars projecting from the head:
1. The pile may be cast 2'-6" longer than required. After driving the concrete pile, remove the concrete from the added length to expose the strands. The strands must be thoroughly cleaned before casting the footing or cap; or
2. 1⅜" o preformed plain holes or 2" o holes formed with galvanized corrugated metal may be used. After driving the pile and cleaning out the holes, the #6, #7 or #8 reinforcing bars shall be installed and the holes shall be filled with approved non-shrink grout.

Note B:
If alternate circular strand arrangement is used, bar extension must be placed to fit.

Note C (Does not apply to this project):
For Seismic Performance Category B bridges (structures), #4/0 gage wire or #3 bars shall be used and the pitch shall be 3".

Not to scale

U.S. DEPARTMENT OF TRANSPORTATION
FEDERAL HIGHWAY ADMINISTRATION
EASTERN FEDERAL LANDS HIGHWAY DIVISION
STERLING, VIRGINIA

FORT BELVOIR - MULLIGAN ROAD
MULLIGAN ROAD OVER PINEY RUN

PRESTRESSED CONCRETE PILES SQUARE: 10" THRU 24"

DET. E551-A

6/19/2008 11:27:48 AM C:\PWworking\PITT\dms9613\bppl.dgn

REG	STATE	PROJECT	SHEET NO.
-	VA	VA-A-AD-48(1)	R58

REINFORCING STEEL SCHEDULE

MARK	NO.	BAR SIZE	PIN DIA. FT. -INCHES	LENGTH FT. -INCHES	WEIGHT (LBS.)	LOCATION
			ABUTMENT A			
			FOOTING			
AF0601						FOOTING
AF0602						FOOTING
AF0603						FOOTING
AF0604						FOOTING
AF0605						FOOTING
AF0606						FOOTING
AF0507						FOOTING
AF0708						FOOTING
AF0509						FOOTING
			NEAT (EPOXY COATED)			
AS0401						STEM
AS0502						STEM
AS0503						STEM
AH0401						BACKWALL
AH0402						BACKWALL
AH0403						BACKWALL
AH0404						BACKWALL
AV0501						BACKWALL
AV0502						BACKWALL
AV0503						BACKWALL
AV0504						BACKWALL
AV0505						BACKWALL
AV0506						BACKWALL
AW0401						WINGWALL
AW0402						WINGWALL
AW0403						WINGWALL
AW0404						WINGWALL
AW0505						WINGWALL
AP0401						PAD
			ABUTMENT B			
			FOOTING			
AF0601						FOOTING
AF0602						FOOTING
AF0603						FOOTING
AF0604						FOOTING
AF0605						FOOTING
AF0606						FOOTING
AF0507						FOOTING
AF0708						FOOTING
AF0509						FOOTING
			NEAT (EPOXY COATED)			
AS0401						STEM
AS0502						STEM
AS0503						STEM
AH0401						BACKWALL
AH0402						BACKWALL
AH0403						BACKWALL
AH0404						BACKWALL
AV0501						BACKWALL
AV0502						BACKWALL
AV0503						BACKWALL
AV0504						BACKWALL
AV0505						BACKWALL
AV0506						BACKWALL
AW0401						WINGWALL
AW0402						WINGWALL
AW0403						WINGWALL
AW0404						WINGWALL
AW0505						WINGWALL
AP0401						PAD

DIMENSION TABLE

MARK	TYPE	A FT. -INCHES	B FT. -INCHES	C FT. -INCHES	D FT. -INCHES	E P FT. -INCHES	F Q FT. -INCHES	G R FT. -INCHES	H FT. -INCHES	I S FT. -INCHES	J T FT. -INCHES	K U FT. -INCHES	L FT. -INCHES
AF0601	1												
AF0602	1												
AF0603	6												
AF0604	2												
AF0605	1												
AF0606	25												
AF0507	1												
AF0708	1												
AF0509	25												
AS0401	30												
AS0502	1												
AS0503	1												
AH0401	1												
AH0402	1												
AH0403	1												
AH0404	1												
AV0501	30												
AV0502	7												
AV0503	7												
AV0504	7												
AV0505	1												
AV0506	1												
AW0401	1												
AW0402	1												
AW0403	1												
AW0404	1												
AW0505	1												
AP0401	1												
AF0601	1												
AF0602	1												
AF0603	6												
AF0604	2												
AF0605	1												
AF0606	25												
AF0507	1												
AF0708	1												
AF0509	25												
AS0401	30												
AS0502	1												
AS0503	1												
AH0401	1												
AH0402	1												
AH0403	1												
AH0404	1												
AV0501	30												
AV0502	7												
AV0503	7												
AV0504	7												
AV0505	1												
AV0506	1												
AW0401	1												
AW0402	1												
AW0403	1												
AW0404	1												
AW0505	1												
AP0401	1												

DIMENSION VARIATION TABLE

MARK	NO. EA. LEN.	DIMEN-SION	FROM FT. -INCHES	TO FT. -INCHES	VARY BY FT. -INCHES	DIMEN-SION	FROM FT. -INCHES	TO FT. -INCHES	VARY BY FT. -INCHES
ABUTMENT A									
AV0501		C							
AW0402		A							
AW0404		A							
ABUTMENT B									
AV0501		C							
AW0402		A							
AW0404		A							

BENDING DIAGRAM

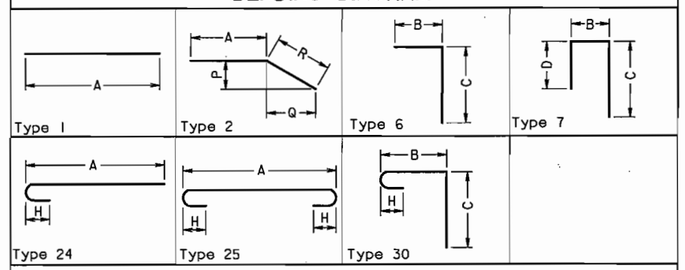

NOTES:

Dimensions in Bending Diagram are out-to-out of bars.

If fabrication of deck slab bar is not possible for length detailed and multiple bars are required, bars shall have the least number of Class B splices possible. Splices shall be located approximately at points of contraflexure and splices in alternate bars shall be located in different bays.

U.S. DEPARTMENT OF TRANSPORTATION
FEDERAL HIGHWAY ADMINISTRATION
EASTERN FEDERAL LANDS HIGHWAY DIVISION
STERLING, VIRGINIA

FORT BELVOIR - MULLIGAN ROAD
MULLIGAN ROAD OVER PINEY RUN

REINFORCING STEEL SCHEDULE

Sheet 1 of 2

6/18/2008 2:36:17 PM C:\PwWorking\PITT\dms96i3\Rebari cae.dgn

REG	STATE	PROJECT	SHEET NO.
-	VA	VA-A-AD-48(1)	R59

REINFORCING STEEL SCHEDULE

MARK	NO.	BAR SIZE	PIN DIA. FT. -INCHES	LENGTH FT. -INCHES	WEIGHT (LBS.)	LOCATION
			BENT CAP			
PC0801						BENT CAP
PC0602						BENT CAP
PC0803						BENT CAP
PC0604						BENT CAP
PC0605						BENT CAP
PC0806						BENT CAP
PC0607						BENT CAP
PC0808						BENT CAP
PS0401						BENT CAP
PS0402						BENT CAP
PS0403						BENT CAP
PS0404						BENT CAP
PP0501						BENT CAP
PP0402						BENT CAP
			SUPERSTRUCTURE (EPOXY COATED)			
SC0601						DECK SLAB
SC0602						DECK SLAB
SL0501						DECK SLAB
SL0602						DECK SLAB
ES0401						DECK SLAB
ES0402						DECK SLAB
ES0403						DECK SLAB
SW0401						SIDEWALK
SW0402						SIOEWALK
SM0401						MEDIAN
SM0402						MEDIAN

DIMENSION TABLE

MARK	TYPE	A FT. -INCHES	B FT. -INCHES	C FT. -INCHES	D FT. -INCHES	E P FT. -INCHES	F Q FT. -INCHES	G R FT. -INCHES	H FT. -INCHES	I S FT. -INCHES	J T FT. -INCHES	K U FT. -INCHES	L FT. -INCHES
PC0801	1												
PC0602	1												
PC0803	25												
PC0604	1												
PC0605	7												
PC0806	1												
PC0607	1												
PC0808	25												
PS0401	51												
PS0402	51												
PS0403	51												
PS0404	51												
PP0501	1												
PP0402	7												
SC0601	24												
SC0602	1												
SL0501	1												
SL0602	1												
ES0401	8												
ES0402	1												
ES0403	1												
SW0401	1												
SW0402	1												
SM0401	1												
SM0402	1												

DIMENSION VARIATION TABLE

MARK	NO. EA. LEN.	DIMEN-SION	FROM FT. -INCHES	TO FT. -INCHES	VARY BY FT. -INCHES	DIMEN-SION	FROM FT. -INCHES	TO FT. -INCHES	VARY BY FT. -INCHES

BENDING DIAGRAM

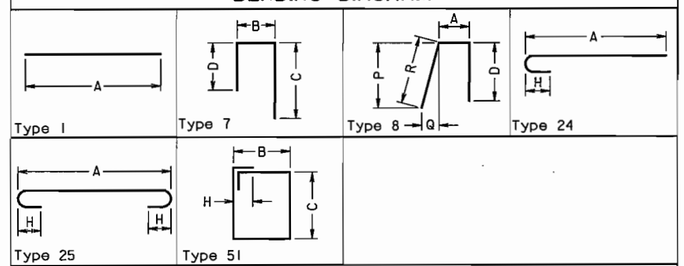

NOTES:

Dimensions in Bending Diagram are out-to-out of bars.

If fabrication of deck slab bar is not possible for length detailed and multiple bars are required, bars shall have the least number of Class B splices possible. Splices shall be located approximately at points of contraflexure and splices in alternate bars shall be located in different bays.

U.S. DEPARTMENT OF TRANSPORTATION
FEDERAL HIGHWAY ADMINISTRATION
EASTERN FEDERAL LANDS HIGHWAY DIVISION
STERLING, VIRGINIA

FORT BELVOIR - MULLIGAN ROAD
MULLIGAN ROAD OVER PINEY RUN

REINFORCING STEEL SCHEDULE

Sheet 2 of 2

6/18/2008 2:36:52 PM C:\PwWorking\PITT\dms96\3\Rebar2.cae.dgn

REG	STATE	PROJECT	SHEET NO.
-	VA	VA-A-AD-48(1)	R60

BS7 — ABUTMENT A

STATION: 219+74 OFFSET: 75 LT
LATITUDE: LONGITUDE:
SURFACE ELEVATION: 56.6 FT COORD. DATUM: NAD 83

FIELD DATA

DATE(S) DRILLED: 5/9/07 - 5/10/07
DRILLING METHOD(S): CONTINUOUS FLIGHT HSA - SPT
SPT METHOD:
OTHER TEST(S):
DRILLER: FROEHLING & ROBERTSON
LOGGER: SUE YOUNG

GROUND WATER
DTW AT 0 HRS (5/11/2007): 6.5 FT

LAB DATA: LIQUID LIMIT, PLASTICITY INDEX, MOISTURE CONTENT (%)

DESCRIPTION OF STRATA (LL / PI)

- 0.0 / 56.6 FOREST FLOOR WITH ROOT MAT, LEAVES, AND WOOD
- 1.0 / 55.6 MOIST, TAN AND BROWN SAND AND GRAVEL (GM); LOOSE GM
- 4.0 / 52.6 MOIST TO WET, BROWN TO GRAY BROWN SANDY SILT, TRACE ROOTS (ML); VERY SOFT ML
- 6.0 / 50.6 WET, GRAY FINE TO MEDIUM GRAINED SAND, TRACE GRAVEL (SW); VERY LOOSE SW
- 8.0 / 48.6 WET, DARK TO LIGHT GRAY AND TAN SAND AND GRAVEL (GM); MEDIUM DENSE
- WITH TRACE SILTY CLAY GM
- 26.5 / 30.1 WET, DARK TO LIGHT GRAY AND TAN SAND AND GRAVEL (GM); MEDIUM DENSE (CONTINUED) GM
- 27.0 / 29.6 MOIST TO WET, BLUE GRAY SILTY CLAY, TRACE FINE GRAINED SAND (CL); VERY SOFT CL
- 32.0 / 24.6 MOIST, BLUE GRAY CLAY, TRACE SHELL FRAGMENTS (CL); STIFF
- VERY SOFT CL
- 39.6 / 17.0 WET, BLUE GRAY FINE GRAINED SANDY SILT (ML); SOFT ML
- 42.0 / 14.6 WET, BLUE GRAY CLAY (CL); VERY SOFT CL
- 44.4 / 12.2 WET, BLUE GRAY FINE GRAINED SAND (SW); LOOSE SW
- 52.0 / 4.6 WET, BLUE GRAY FINE GRAINED SAND (SW); LOOSE (CONTINUED) SW
- 53.0 / 3.6 WET, GRAY CLAYEY SAND, SOME GRAVEL (GW-GC); LOOSE GW-GC
- 56.0 / 0.6 WET, GRAY SILTY SAND, SOME GRAVEL (SM); MEDIUM DENSE SM
- 61.0 / -4.4 WET, BLUE GRAY SILTY CLAY, TRACE FINE SAND AND GRAVEL (CL); VERY SOFT
- TRACE SHELL FRAGMENTS CL
- 68.0 / -11.4 WET, BLUE GRAY SILTY CLAY, TRACE FINE SAND AND GRAVEL (CL); VERY SOFT (CONTINUED)
- TRACE SHELL FRAGMENTS CL
- 73.6 / -17.0 WET, TAN, BROWN, GRAY, AND RED CLAYEY GRAVEL WITH SAND

BOTTOM OF FOOTING

REMARKS:

PAGE 1 OF 2

BS7 — ABUTMENT A

STATION: 219+74 OFFSET: 75 LT
LATITUDE: LONGITUDE:
SURFACE ELEVATION: 56.6 FT COORD. DATUM: NAD 83

FIELD DATA

DATE(S) DRILLED: 5/9/07 - 5/10/07
DRILLING METHOD(S): CONTINUOUS FLIGHT HSA - SPT
SPT METHOD:
OTHER TEST(S):
DRILLER: FROEHLING & ROBERTSON
LOGGER: SUE YOUNG

GROUND WATER
DTW AT 0 HRS (5/11/2007): 6.5 FT

LAB DATA: LIQUID LIMIT, PLASTICITY INDEX, MOISTURE CONTENT (%)

DESCRIPTION OF STRATA (LL / PI)

- (GC); MEDIUM DENSE GC
- 76.0 / -19.4 WET, TAN AND WHITE GRAVEL (GP); DENSE GP
- 82.0 / -25.4 MOIST, BROWN CLAYEY SILT, TRACE FINE GRAINED SAND (ML); STIFF ML
- 87.0 / -30.4 MOIST, BLUE GRAY, AND BROWN CLAYEY SILT (ML); VERY STIFF ML
- BORING TERMINIATED AT 90.0 FEET

REMARKS:

PAGE 2 OF 2

BS8 — ABUTMENT A

STATION: 219+70 OFFSET: 35 LT
LATITUDE: LONGITUDE:
SURFACE ELEVATION: 55.4 FT COORD. DATUM: NAD 83

FIELD DATA

DATE(S) DRILLED: 5/9/07 - 5/10/07
DRILLING METHOD(S): CONTINUOUS FLIGHT HSA - SPT
SPT METHOD:
OTHER TEST(S):
DRILLER: FROEHLING & ROBERTSON
LOGGER: SUE YOUNG

GROUND WATER
DTW AT 0 HRS (5/10/2007): 6.2 FT

LAB DATA: LIQUID LIMIT, PLASTICITY INDEX, MOISTURE CONTENT (%)

DESCRIPTION OF STRATA (LL / PI)

- 0.0 / 55.4 DAMP, BROWN SANDY SILT (ML); LOOSE ML
- 2.0 / 53.4 MOIST, BROWN AND RUST MEDIUM GRAINED SAND (SP); LOOSE
- TRACE GRAVEL SP
- 6.0 / 49.4 MOIST TO WET, BROWN SANDY SILT (ML); VERY SOFT ML
- 7.0 / 48.4 WET, TAN AND GRAY SAND AND SMALL GRAVEL (GM); LOOSE
- MEDIUM DENSE
- LARGER, ROUNDED GRAVEL GM
- 23.0 / 32.4 WET, GRAY MEDIUM GRAINED SAND (SP); LOOSE SP
- 24.4 / 31.0 WET, BROWN SANDY CLAY (CL); VERY SOFT CL
- 24.8 / 30.6 WET, GRAY, TAN, AND BROWN SAND AND GRAVEL (GM); DENSE GM
- 26.0 / 29.4 WET, GRAY FAT CLAY WITH SAND (CH); SOFT CH
- 29.0 / 26.4 MOIST, BLUE GRAY SILTY CLAY (CL); VERY SOFT CL
- 32.0 / 23.4 MOIST, BLUE GRAY FINE SANDY CLAY (CL); SOFT CL
- 37.0 / 18.4 MOIST, BLUE GRAY CLAY (CL); STIFF
- MEDIUM STIFF CL
- 47.0 / 8.4 MOIST, BLUE GRAY FINE SANDY CLAY (CL); VERY SOFT CL
- 51.0 / 4.4 WET, GRAY MEDIUM TO COARSE SAND, TRACE GRAVEL (SP); LOOSE
- TRACE SHELL FRAGMENTS SP
- 58.5 / -3.1

BOTTOM OF FOOTING

REMARKS:

PAGE 1 OF 2

THE SUBSURFACE INFORMATION SHOWN ON THE BORING LOGS IN THESE PLANS WAS OBTAINED WITH REASONABLE CARE AND RECORDED IN GOOD FAITH SOLELY FOR USE BY THE DEPARTMENT IN ESTABLISHING DESIGN CONTROLS FOR THE PROJECT. THE DEPARTMENT HAS NO REASON TO SUSPECT THAT SUCH INFORMATION IS NOT REASONABLY ACCURATE AS AN APPROXIMATE INDICATION OF THE SUBSURFACE CONDITIONS AT THE SITES WHERE THE BORINGS WERE TAKEN. THE DEPARTMENT DOES NOT IN ANY WAY WARRANT OR GUARANTEE THAT SUCH DATA CAN BE PROJECTED AS INDICATIVE OF CONDITIONS BEYOND THE LIMITS OF THE BORINGS SHOWN; AND ANY SUCH PROJECTIONS BY BIDDERS ARE PURELY INTERPRETIVE AND ALTOGETHER SPECULATIVE. FURTHER, THE DEPARTMENT DOES NOT IN ANY WAY GUARANTEE, EITHER EXPRESSLY OR BY IMPLICATION, THE SUFFICIENCY OF THE INFORMATION FOR BID PURPOSES.

THE BORING LOGS ARE MADE AVAILABLE TO BIDDERS IN ORDER THAT THEY MAY HAVE ACCESS TO SUBSURFACE DATA IDENTICAL TO THOSE WHICH ARE POSSESSED BY THE DEPARTMENT, AND ARE NOT INTENDED AS A SUBSTITUTE FOR PERSONAL INVESTIGATION, INTERPRETATION AND JUDGMENT BY THE BIDDERS.

NOTE: SEE MATERIAL AND SAMPLE SYMBOLS LIST.

LEGEND:
- ▼GROUNDWATER, INITIALLY ENCOUNTERED
- ▼GROUNDWATER, STABILIZED
- RQD ROCK QUALITY DESIGNATION
- 15/21/25 SPT BLOW COUNTS

U.S. DEPARTMENT OF TRANSPORTATION
FEDERAL HIGHWAY ADMINISTRATION
EASTERN FEDERAL LANDS HIGHWAY DIVISION
STERLING, VIRGINIA

FORT BELVOIR - MULLIGAN ROAD
MULLIGAN ROAD OVER PINEY RUN

ENGINEERING GEOLOGY

© 2008, COMMONWEALTH OF VIRGINIA

6/18/2008 2:32:02 PM C:\PwWorking\PITT\dms96131\Geology1.dgn

REG	STATE	PROJECT	SHEET NO.
-	VA	VA-A-AD-48(1)	R61

Abutment A

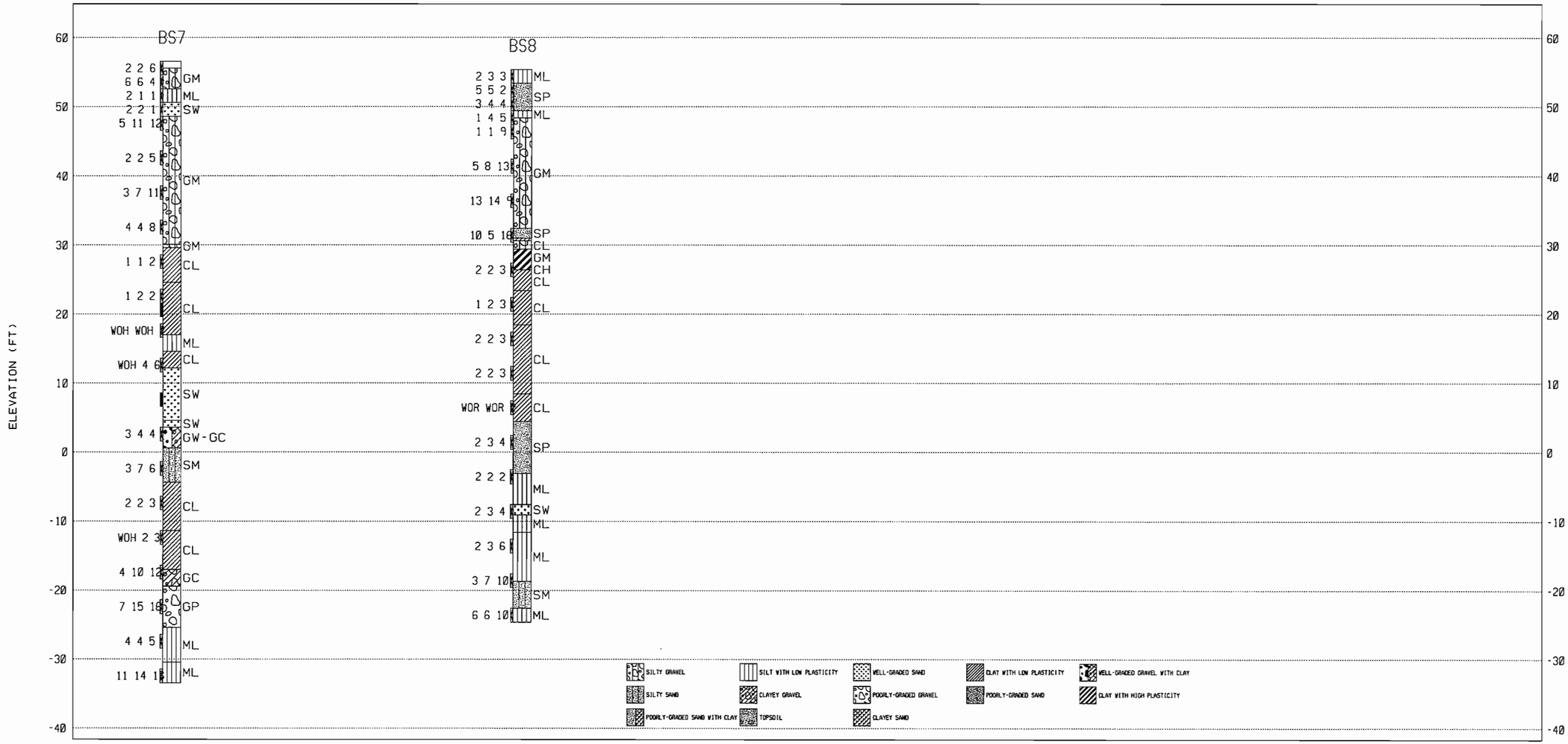

219+74
75 LT

219+70
35 LT

THE SUBSURFACE INFORMATION SHOWN ON THE BORING LOGS IN THESE PLANS WAS OBTAINED WITH REASONABLE CARE AND RECORDED IN GOOD FAITH SOLELY FOR USE BY THE DEPARTMENT IN ESTABLISHING DESIGN CONTROLS FOR THE PROJECT. THE DEPARTMENT HAS NO REASON TO SUSPECT THAT SUCH INFORMATION IS NOT REASONABLY ACCURATE AS AN APPROXIMATE INDICATION OF THE SUBSURFACE CONDITIONS AT THE SITES WHERE THE BORINGS WERE TAKEN. THE DEPARTMENT DOES NOT IN ANY WAY WARRANT OR GUARANTEE THAT SUCH DATA CAN BE PROJECTED AS INDICATIVE OF CONDITIONS BEYOND THE LIMITS OF THE BORINGS SHOWN; AND ANY SUCH PROJECTIONS BY BIDDERS ARE PURELY INTERPRETIVE AND ALTOGETHER SPECULATIVE. FURTHER, THE DEPARTMENT DOES NOT IN ANY WAY GUARANTEE, EITHER EXPRESSLY OR BY IMPLICATION, THE SUFFICIENCY OF THE INFORMATION FOR BID PURPOSES.

THE BORING LOGS ARE MADE AVAILABLE TO BIDDERS IN ORDER THAT THEY MAY HAVE ACCESS TO SUBSURFACE DATA IDENTICAL TO THOSE WHICH ARE POSSESSED BY THE DEPARTMENT, AND ARE NOT INTENDED AS A SUBSTITUTE FOR PERSONAL INVESTIGATION, INTERPRETATION AND JUDGMENT BY THE BIDDERS.

NOTES: SEE BOREHOLE LOGS FOR COMPLETE DATA.
SEE MATERIAL AND SAMPLE SYMBOLS LIST.

LEGEND:
▽ GROUNDWATER, INITIALLY ENCOUNTERED
▼ GROUNDWATER, STABILIZED
REC RECOVERY
RQD ROCK QUALITY DESIGNATION

15 21 25 SPT BLOW COUNTS

U.S. DEPARTMENT OF TRANSPORTATION
FEDERAL HIGHWAY ADMINISTRATION
EASTERN FEDERAL LANDS HIGHWAY DIVISION
STERLING, VIRGINIA

FORT BELVOIR - MULLIGAN ROAD
MULLIGAN ROAD OVER PINEY RUN

ENGINEERING GEOLOGY

© 2008, COMMONWEALTH OF VIRGINIA

6/18/2008 2:32:37 PM C:\PwWorking\PITT\dms95613\Geology2.dgn

REG	STATE	PROJECT	SHEET NO.
-	VA	VA-A-AD-48(1)	R62

BS9 — BENT

STATION: 220+84 OFFSET: 69 LT
LATITUDE: LONGITUDE:
SURFACE ELEVATION: 54.3 FT COORD. DATUM: NAD 83

DATE(S) DRILLED: 5/16/07
DRILLING METHOD(S): CONTINUOUS FLIGHT HSA - SPT
SPT METHOD:
OTHER TEST(S):
DRILLER: FROEHLING & ROBERTSON
LOGGER: SUE YOUNG

GROUND WATER
DTW AT 15 HRS (5/17/2007): 2.6 FT

FIELD DATA: DEPTH (FT), ELEVATION (FT), SOIL: STANDARD PENETRATION TEST HAMMER BLOWS, % SOIL RECOVERY, SAMPLE LEGEND, SAMPLE INTERVAL; ROCK: % CORE RECOVERY, ROCK QUALITY DESIGNATION, DIP, STRATA, JOINTS, STRATA LEGEND

LAB DATA: LIQUID LIMIT, PLASTICITY INDEX, MOISTURE CONTENT (%)

DESCRIPTION OF STRATA (LL, PI)

- 0.0 / 54.3 — DAMP, BROWN SILTY SAND (SM); LOOSE
- TRACE CLAY AND GRAVEL SM
- 4.0 / 50.3 — MOIST, GRAY SILTY FINE SAND (SM); LOOSE SM
- 8.0 / 46.3 — WET, BROWN, GRAY, AND TAN SILT, SAND, AND GRAVEL (GM); LOOSE GM
- 28.0 / 26.3 — MOIST, BLUE GRAY AND BROWN FAT CLAY (CH); VERY SOFT
- TRACE FINE SAND CH
- 46.5 / 7.8 — WET, BROWN, GRAY, AND TAN MEDIUM AND COARSE GRAINED SAND AND GRAVEL (GM); LOOSE GM
- 53.0 / 1.3 — DAMP, BLUE GRAY AND BROWN FINE SANDY SILT (ML); VERY SOFT
- MOIST ML
- 62.0 / -7.7 — WET, GRAY, TAN, AND BROWN MEDIUM TO COARSE GRAINED SAND, SILT, AND GRAVEL (GM); MEDIUM DENSE GM
- 66.5 / -12.2 — MOIST TO WET, BROWNISH GRAY FINE SANDY SILT (ML); SOFT
- MEDIUM STIFF
- TRACE GRAVEL ML
- 82.0 / -27.7 — DAMP TO MOIST, BLUE GRAY AND BROWN CLAYEY SILT (ML); VERY STIFF ML
- BORING TERMINATED AT 85.0 FEET

REMARKS: OFFSET 6 FT WEST 4 FT LEFT DUE TO UNDERGROUND UTILITIES

BS10 — BENT

STATION: 220+90 OFFSET: 24 LT
LATITUDE: LONGITUDE:
SURFACE ELEVATION: 53.8 FT COORD. DATUM: NAD 83

DATE(S) DRILLED: 5/15/07
DRILLING METHOD(S): CONTINUOUS FLIGHT HSA - SPT
SPT METHOD:
OTHER TEST(S):
DRILLER: FROEHLING & ROBERTSON
LOGGER: SUE YOUNG

GROUND WATER
DTW AT 0 HRS (5/15/2007): 6.5 FT 24 HR (5/16/2007)
DTW 5.1 FT; CAVED TO 6.9 FT

FIELD DATA: DEPTH (FT), ELEVATION (FT), SOIL: STANDARD PENETRATION TEST HAMMER BLOWS, % SOIL RECOVERY, SAMPLE LEGEND, SAMPLE INTERVAL; ROCK: % CORE RECOVERY, ROCK QUALITY DESIGNATION, DIP, STRATA, JOINTS, STRATA LEGEND

LAB DATA: LIQUID LIMIT, PLASTICITY INDEX, MOISTURE CONTENT (%)

DESCRIPTION OF STRATA (LL, PI)

- 0.0 / 53.8 — DAMP, BROWN SAND AND SILTY SAND (SM); LOOSE. LOCATED ON BANK OF PINEY RUN - SAND ON SURFACE DUE TO FLOODING SM
- 2.0 / 51.8 — MOIST, BROWN CLAYEY SILT (ML) WITH TRACE SAND; VERY SOFT ML
- 4.2 / 49.6 — MOIST, BROWN SANDY CLAY (CL); STIFF CL
- 5.0 / 48.8 — WET, TAN, BROWN, AND GRAY COARSE SAND AND GRAVEL (GM); MEDIUM DENSE
- MEDIUM GRAINED SAND GM
- 23.0 / 30.8 — WET, GRAY SILTY SAND (SM); VERY LOOSE SM
- 23.5 / 30.3 — WET, SILTY CLAY, TRACE FINE GRAINED SAND (CL); VERY SOFT CL
- 24.5 / 29.3 — WET, GRAY CLAYEY SAND (SP-SC); VERY LOOSE SP-SC
- 27.0 / 26.8 — WET, GRAY COARSE SAND, TRACE GRAVEL (SP); MEDIUM DENSE SP
- 31.0 / 22.8 — WET, GRAY FINE SANDY CLAY (CL); VERY SOFT CL
- 34.0 / 19.8 — WET, GRAY MEDIUM GRAINED SAND (SP); MEDIUM DENSE SP
- 37.0 / 16.8 — WET, GRAY SANDY CLAY (CL); VERY SOFT CL
- 42.0 / 11.8 — WET, GRAY CLAYEY SILT, TRACE SAND (ML); VERY SOFT ML
- 44.0 / 9.8 — WET, GRAY FINE TO MEDIUM GRAINED SAND (SW); MEDIUM DENSE SW
- 47.0 / 6.8 — MOIST, BLUE GRAY FAT CLAY, TRACE FINE GRAINED SAND (CH); VERY SOFT CH
- 52.0 / 1.8 — WET, BLUE GRAY SILTY FINE SAND, TRACE SHELL FRAGMENTS AND WOOD (SM); LOOSE SM
- 56.0 / -2.2 — SLIGHTLY MOIST, BLUE GRAY CLAYEY SILT, TRACE FINE GRAINED SAND (ML); VERY SOFT ML
- 62.0 / -8.2 — MOIST, BLUE GRAY SILT, TRACE FINE GRAINED SAND AND SHELL FRAGMENTS (ML); VERY SOFT
- SLIGHTLY MORE FINE GRAINED SAND AND GRAVEL ML
- 73.0 / -19.2 — WET, GRAY MEDIUM GRAINED SAND (SP); LOOSE SP

REMARKS: CAVED AT 7.5 FT AFTER AUGERS WERE REMOVED.
OFFSET 4 FT. TOWARDS CREEK (WEST) DUE TO UNDERGROUND UTILITY 0.5 FT. HIGHER IN ELEVATION.

BS10 — BENT

STATION: 220+90 OFFSET: 24 RT
LATITUDE: LONGITUDE:
SURFACE ELEVATION: 53.8 FT COORD. DATUM: NAD 83

DATE(S) DRILLED: 5/15/07
DRILLING METHOD(S): CONTINUOUS FLIGHT HSA - SPT
SPT METHOD:
OTHER TEST(S):
DRILLER: FROEHLING & ROBERTSON
LOGGER: SUE YOUNG

GROUND WATER
DTW AT 0 HRS (5/15/2007): 6.5 FT 24 HR (5/16/2007)
DTW 5.1 FT; CAVED TO 6.9 FT

FIELD DATA: DEPTH (FT), ELEVATION (FT), SOIL: STANDARD PENETRATION TEST HAMMER BLOWS, % SOIL RECOVERY, SAMPLE LEGEND, SAMPLE INTERVAL; ROCK: % CORE RECOVERY, ROCK QUALITY DESIGNATION, DIP, STRATA, JOINTS, STRATA LEGEND

LAB DATA: LIQUID LIMIT, PLASTICITY INDEX, MOISTURE CONTENT (%)

DESCRIPTION OF STRATA (LL, PI)

- 77.0 / -23.2 — WET, GRAY WITH SOME BROWN MOTTLES FINE GRAINED SANDY CLAY, TRACE SHELL FRAGMENTS (CL); STIFF CL
- 82.0 / -28.2 — MOIST, GRAY AND BROWN MOTTLES CLAYEY SILT (ML); VERY STIFF ML
- BORING TERMINATED AT 90.0 FEET

REMARKS: CAVED AT 7.5 FT AFTER AUGERS WERE REMOVED.
OFFSET 4 FT. TOWARDS CREEK (WEST) DUE TO UNDERGROUND UTILITY 0.5 FT. HIGHER IN ELEVATION.

THE SUBSURFACE INFORMATION SHOWN ON THE BORING LOGS IN THESE PLANS WAS OBTAINED WITH REASONABLE CARE AND RECORDED IN GOOD FAITH SOLELY FOR USE BY THE DEPARTMENT IN ESTABLISHING DESIGN CONTROLS FOR THE PROJECT. THE DEPARTMENT HAS NO REASON TO SUSPECT THAT SUCH INFORMATION IS NOT REASONABLY ACCURATE AS AN APPROXIMATE INDICATION OF THE SUBSURFACE CONDITIONS AT THE SITES WHERE THE BORINGS WERE TAKEN. THE DEPARTMENT DOES NOT IN ANY WAY WARRANT OR GUARANTEE THAT SUCH DATA CAN BE PROJECTED AS INDICATIVE OF CONDITIONS BEYOND THE LIMITS OF THE BORINGS SHOWN; AND ANY SUCH PROJECTIONS BY BIDDERS ARE PURELY INTERPRETIVE AND ALTOGETHER SPECULATIVE. FURTHER, THE DEPARTMENT DOES NOT IN ANY WAY GUARANTEE, EITHER EXPRESSLY OR BY IMPLICATION, THE SUFFICIENCY OF THE INFORMATION FOR BID PURPOSES.

THE BORING LOGS ARE MADE AVAILABLE TO BIDDERS IN ORDER THAT THEY MAY HAVE ACCESS TO SUBSURFACE DATA IDENTICAL TO THOSE WHICH ARE POSSESSED BY THE DEPARTMENT, AND ARE NOT INTENDED AS A SUBSTITUTE FOR PERSONAL INVESTIGATION, INTERPRETATION AND JUDGMENT BY THE BIDDERS.

NOTE: SEE MATERIAL AND SAMPLE SYMBOLS LIST.

LEGEND:
- ▽GROUNDWATER, INITIALLY ENCOUNTERED
- ▼GROUNDWATER, STABILIZED
- RQD ROCK QUALITY DESIGNATION
- 15 21 25 SPT BLOW COUNTS

U.S. DEPARTMENT OF TRANSPORTATION
FEDERAL HIGHWAY ADMINISTRATION
EASTERN FEDERAL LANDS HIGHWAY DIVISION
STERLING, VIRGINIA

FORT BELVOIR - MULLIGAN ROAD
MULLIGAN ROAD OVER PINEY RUN

ENGINEERING GEOLOGY

© 2008, COMMONWEALTH OF VIRGINIA

6/18/2008 2:33:08 PM C:\PwWorking\PITT\dms9613\Geology3.dgn

REG	STATE	PROJECT	SHEET NO.
-	VA	VA-A-AD-48(1)	R63

Bent

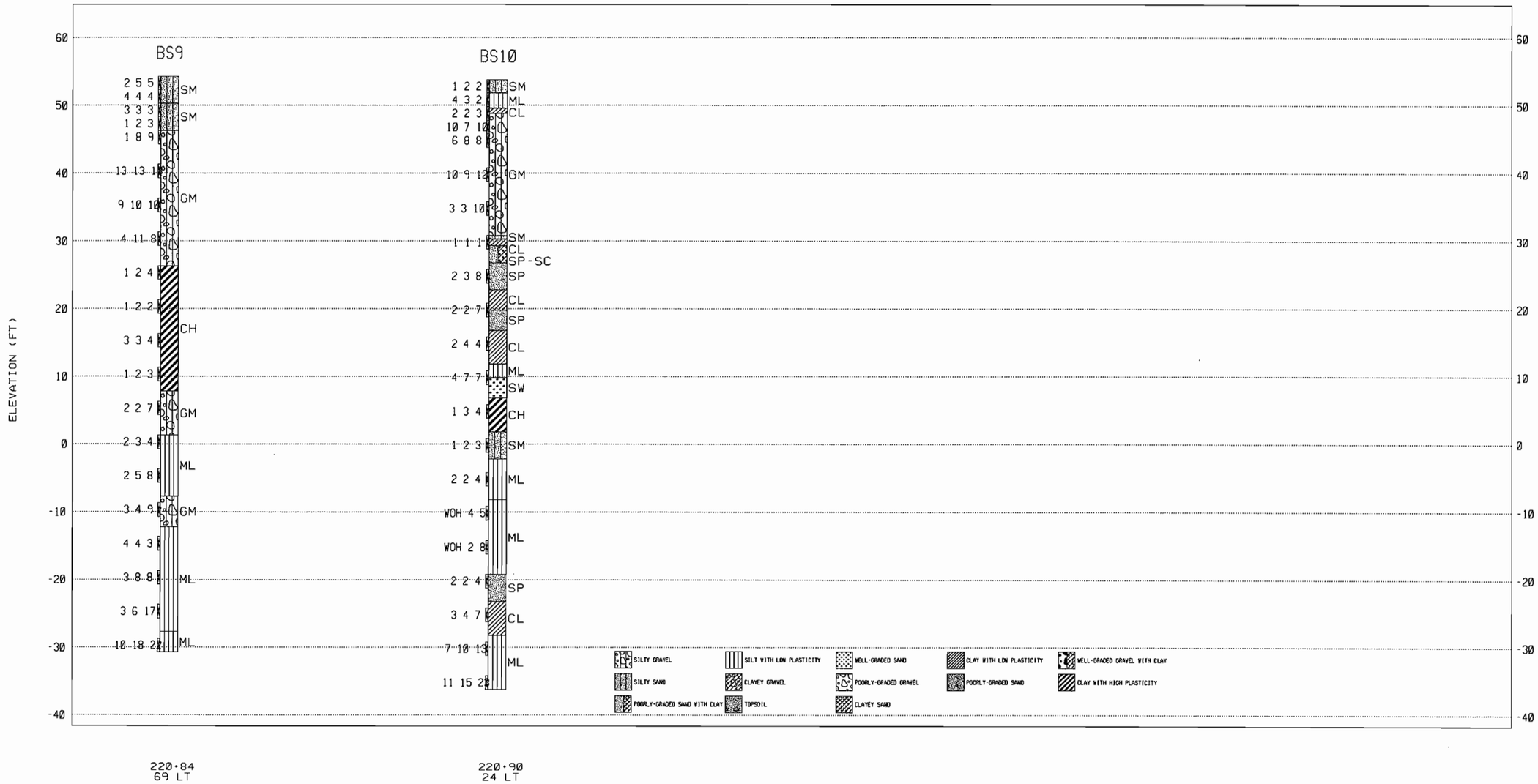

220+84
69 LT

220+90
24 LT

THE SUBSURFACE INFORMATION SHOWN ON THE BORING LOGS IN THESE PLANS WAS OBTAINED WITH REASONABLE CARE AND RECORDED IN GOOD FAITH SOLELY FOR USE BY THE DEPARTMENT IN ESTABLISHING DESIGN CONTROLS FOR THE PROJECT. THE DEPARTMENT HAS NO REASON TO SUSPECT THAT SUCH INFORMATION IS NOT REASONABLY ACCURATE AS AN APPROXIMATE INDICATION OF THE SUBSURFACE CONDITIONS AT THE SITES WHERE THE BORINGS WERE TAKEN. THE DEPARTMENT DOES NOT IN ANY WAY WARRANT OR GUARANTEE THAT SUCH DATA CAN BE PROJECTED AS INDICATIVE OF CONDITIONS BEYOND THE LIMITS OF THE BORINGS SHOWN; AND ANY SUCH PROJECTIONS BY BIDDERS ARE PURELY INTERPRETIVE AND ALTOGETHER SPECULATIVE. FURTHER, THE DEPARTMENT DOES NOT IN ANY WAY GUARANTEE, EITHER EXPRESSLY OR BY IMPLICATION, THE SUFFICIENCY OF THE INFORMATION FOR BID PURPOSES.

THE BORING LOGS ARE MADE AVAILABLE TO BIDDERS IN ORDER THAT THEY MAY HAVE ACCESS TO SUBSURFACE DATA IDENTICAL TO THOSE WHICH ARE POSSESSED BY THE DEPARTMENT, AND ARE NOT INTENDED AS A SUBSTITUTE FOR PERSONAL INVESTIGATION, INTERPRETATION AND JUDGMENT BY THE BIDDERS.

NOTES: SEE BOREHOLE LOGS FOR COMPLETE DATA.
SEE MATERIAL AND SAMPLE SYMBOLS LIST.

LEGEND:
▽ GROUNDWATER, INITIALLY ENCOUNTERED
▼ GROUNDWATER, STABILIZED
REC RECOVERY
RQD ROCK QUALITY DESIGNATION

15 21 25 SPT BLOW COUNTS

U.S. DEPARTMENT OF TRANSPORTATION
FEDERAL HIGHWAY ADMINISTRATION
EASTERN FEDERAL LANDS HIGHWAY DIVISION
STERLING, VIRGINIA

FORT BELVOIR - MULLIGAN ROAD
MULLIGAN ROAD OVER PINEY RUN

ENGINEERING GEOLOGY

© 2008, COMMONWEALTH OF VIRGINIA

6/18/2008 2:33:38 PM C:\Pwworking\PITT\dms96131\Geology4.dgn

REG	STATE	PROJECT	SHEET NO.
-	VA	VA-A-AD-48(1)	R64

BS11 — ABUTMENT B

STATION: 221+42 OFFSET: 59 LT
LATITUDE: LONGITUDE:
SURFACE ELEVATION: 54.5 FT COORD. DATUM: NAD 83

FIELD DATA

DATE(S) DRILLED: 5/15/07 - 5/16/07
DRILLING METHOD(S): CONTINUOUS FLIGHT HSA - SPT
SPT METHOD:
OTHER TEST(S):
DRILLER: FROEHLING & ROBERTSON
LOGGER: SUE YOUNG

GROUND WATER
DTW AT 0 HRS. (5/15/2007): 4.5 FT.

DEPTH (FT)	ELEVATION (FT)	STANDARD PENETRATION TEST HAMMER BLOWS	% SOIL RECOVERY	SAMPLE LEGEND	SAMPLE INTERVAL	% CORE RECOVERY	ROCK QUALITY DESIGNATION	DIP	STRATA	JOINTS	STRATA LEGEND	LIQUID LIMIT	PLASTICITY INDEX	MOISTURE CONTENT (%)
2		1 1 2	60	X	0									
4	50	3 3 4	60	X	2									
6		3 3 4	75	X	4									
8	45	9 11 14	50	X	6									
10			15	X	8									
12	40	12 8 6	50	X	10									
14		4 6 10		X	13									
16	35	8 12 12	70	X	15									
18				X	18									
20	30	6 5 4	40	X	20									
22				X	23									
24	25	2 2 3	45	X	25									
26				X	28									
28	20	1 1 1	65	X	30									
30				X	33									
32	15	3 3 4	45	X	35									
34				X	38									
36	10	4 6 10	40	X	40									
38				X	43									
40	5	2 3 3	40	X	45									
42				X	48									
44	0	5 6 10	40	X	50									
46				X	53									
48	-5	3 5 7	55	X	55									
50				X	58									
52	-10	10 8 9	15	X	60									
54				X	63									
56	-15	3 4 5	90	X	65									
58				X	68									
60	-20	7 9 16	100	X	70									
62				X	73									
64	-25	9 16 27	75	X	75									
66				X	78									
68	-30	9 10 22	100	X	80									
70				X	83									
72				X	85									

DESCRIPTION OF STRATA (LL / PI)

- 0.0 / 54.5 — MOIST, BROWN FOREST FLOOR WITH ROOTS AND SILT AND SAND; VERY LOOSE TOPS
- 0.8 / 53.7 — DAMP, BROWN SILTY FINE GRAINED SAND (SM); VERY LOOSE
- GRAY AND BROWN; LOOSE SM
- 6.0 / 48.5 — WET, TAN, BROWN, AND GRAY SAND AND GRAVEL (GM); MEDIUM DENSE GM
- 8.0 / 46.5 — GRAVEL GM
- 11.0 / 43.5 — WET, TAN, BROWN, AND GRAY SAND AND GRAVEL (GM); MEDIUM DENSE GM
- 28.0 / 26.5 — WET, GRAY SILTY CLAY, TRACE FINE GRAINED SAND (CL); STIFF (LL: CL)
- 29.5 / 25.0 — WET, GRAY FINE GRAINED SAND (SP); LOOSE SP
- 33.0 / 21.5 — WET, GRAY FINE GRAINED SANDY FAT CLAY (CH); STIFF CH
- 36.5 / 18.0 — WET, GRAY CLAYEY FINE GRAINED SAND, SOME GRAVEL (SP-SC); LOOSE SP-SC
- 41.0 / 13.5 — WET, GRAY SILTY FINE GRAINED SAND (SM); MEDIUM DENSE SM
- 46.0 / 8.5 — WET, GRAY FINE GRAINED SANDY SILT (ML); VERY SOFT ML
- 51.0 / 3.5 — WET, GRAY FINE TO COARSE GRAINED SAND AND GRAVEL (GM); MEDIUM DENSE GM
- 67.0 / -12.5 — MOIST, BLUE GRAY AND BROWN CLAYEY SILT (ML); VERY SOFT ML
- 72.0 / -17.5 — DAMP, GRAY SILT, TRACE FINE GRAINED SAND AND SOME FINE GRAINED SAND LAYERS (0.01 FT. THICK (ML); VERY STIFF ML
- 76.0 / -21.5 — DAMP, GRAY SILT (ML); VERY STIFF ML
- 83.0 / -28.5 — DAMP, BLUE/BROWN AND BLUE SILT (ML); VERY STIFF ML

BORING TERMINATED AT 85.0 FEET

BOTTOM OF FOOTING

REMARKS: CAVED AT 8.0 FT. AFTER AUGERS WERE REMOVED.

PAGE 1 OF 1

BS12 — ABUTMENT B

STATION: 221+38 OFFSET: 20 LT
LATITUDE: LONGITUDE:
SURFACE ELEVATION: 53.3 FT COORD. DATUM: NAD 83

FIELD DATA

DATE(S) DRILLED: 5/15/07 - 5/15/07
DRILLING METHOD(S): CONTINUOUS FLIGHT HSA - SPT
SPT METHOD:
OTHER TEST(S):
DRILLER: FROEHLING & ROBERTSON
LOGGER: SUE YOUNG

GROUND WATER
DTW AT 0 HRS. (5/15/2007): 3.0 FEET; 24 HR. (5/19/2007) DET 4.2 FT.; CAVED TO 10.2 FT.

DEPTH (FT)	ELEVATION (FT)	STANDARD PENETRATION TEST HAMMER BLOWS	% SOIL RECOVERY	SAMPLE LEGEND	SAMPLE INTERVAL	% CORE RECOVERY	ROCK QUALITY DESIGNATION	DIP	STRATA	JOINTS	STRATA LEGEND	LIQUID LIMIT	PLASTICITY INDEX	MOISTURE CONTENT (%)
2		2 3 4	60	X	0									
4	50	2 3 3	65	X	2									
6		4 4 4	70	X	4									
8	45	3 4 7	40	X	6									
10				X	8									
12	40	10 8 9	75	X	10									
14		10 7 4		X	13									
16	35	7 8 8	100	X	15									
18				X	18									
20	30	5 4 3	75	X	20									
22				X	23									
24	25	2 3 3	90	X	25									
26				X	28									
28	20	3 3 4	60	X	30									
30				X	33									
32	15	5 7 7	100	X	35									
34				X	38									
36	10	3 3 4	90	X	40									
38				X	43									
40	5	3 3 4		X	45									
42				X	48									
44	0	3 4 6	75	X	50									
46				X	53									
48	-5	7 9 12	50	X	55									
50				X	58									
52	-10	9 12 14	90	X	60									
54				X	63									
56	-15	11 12 14	100	X	65									
58				X	68									
60	-20	14 17 28	100	X	70									
62				X	73									
64				X	75									

DESCRIPTION OF STRATA (LL / PI)

- 0.0 / 53.3 — TOPSOIL WITH ROOTS AND SAND AND SILT
- 0.5 / 52.8 — DAMP, GRAY AND BROWN CLAYEY SILT, TRACE ROOTS (ML); STIFF (LL: ML)
- 2.0 / 51.3 — DAMP, BROWN AND RUST MOTTLED SANDY CLAY (CL); MEDIUM STIFF CL
- 4.0 / 49.3 — MOIST, BROWN, GRAY AND TAN SILT AND GRAVEL (GM); LOOSE GM
- 6.0 / 47.3 — MOIST, GRAY SILTY SAND (SM); MEDIUM DENSE SM
- 8.0 / 45.3 — WET, GRAY SAND AND GRAVEL (GM); MEDIUM DENSE GM
- 17.0 / 36.3 — WET, GRAY MEDIUM TO COARSE GRAINED SAND (SW); MEDIUM DENSE SW
- 22.0 / 31.3 — MOIST TO WET, GRAY SILTY SAND (SM); LOOSE
- WET SM
- 32.0 / 21.3 — MOIST TO WET, GRAYISH BROWN SILTY CLAY, TRACE FINE GRAINED SAND (CL); VERY SOFT CL
- 36.5 / 16.8 — WET, GRAY, TAN, AND BROWN GRAVEL AND FINE TO COARSE GRAINED SAND (GM); MEDIUM DENSE GM
- 42.0 / 11.3 — WET, BROWNISH GRAY FINE SANDY SILT (ML); VERY SOFT ML
- 46.0 / 7.3 — MOIST, BROWNISH GRAY SILT (ML); VERY SOFT ML
- 52.0 / 1.3 — WET, GRAY, TAN, AND BROWN SILT, SAND AND GRAVEL (GM); LOOSE GM
- 62.0 / -8.7 — DAMP, BLACK AND GRAY SILT AND WOOD FRAGMENTS (ML); MEDIUM STIFF ML
- 66.0 / -12.7 — MOIST, GRAY SANDY CLAY (CL); VERY STIFF CL
- 72.0 / -18.7 — MOIST TO WET, GRAY CLAYEY FINE SAND (SC); DENSE SC

BORING TERMINATED AT 75.0 FEET

BOTTOM OF FOOTING

REMARKS: CAVED TO 12.0 FT. AFTER AUGERS WERE REMOVED

PAGE 1 OF 1

THE SUBSURFACE INFORMATION SHOWN ON THE BORING LOGS IN THESE PLANS WAS OBTAINED WITH REASONABLE CARE AND RECORDED IN GOOD FAITH SOLELY FOR USE BY THE DEPARTMENT IN ESTABLISHING DESIGN CONTROLS FOR THE PROJECT. THE DEPARTMENT HAS NO REASON TO SUSPECT THAT SUCH INFORMATION IS NOT REASONABLY ACCURATE AS AN APPROXIMATE INDICATION OF THE SUBSURFACE CONDITIONS AT THE SITES WHERE THE BORINGS WERE TAKEN. THE DEPARTMENT DOES NOT IN ANY WAY WARRANT OR GUARANTEE THAT SUCH DATA CAN BE PROJECTED AS INDICATIVE OF CONDITIONS BEYOND THE LIMITS OF THE BORINGS SHOWN; AND ANY SUCH PROJECTIONS BY BIDDERS ARE PURELY INTERPRETIVE AND ALTOGETHER SPECULATIVE. FURTHER, THE DEPARTMENT DOES NOT IN ANY WAY GUARANTEE, EITHER EXPRESSLY OR BY IMPLICATION, THE SUFFICIENCY OF THE INFORMATION FOR BID PURPOSES.

THE BORING LOGS ARE MADE AVAILABLE TO BIDDERS IN ORDER THAT THEY MAY HAVE ACCESS TO SUBSURFACE DATA IDENTICAL TO THOSE WHICH ARE POSSESSED BY THE DEPARTMENT, AND ARE NOT INTENDED AS A SUBSTITUTE FOR PERSONAL INVESTIGATION, INTERPRETATION AND JUDGMENT BY THE BIDDERS.

NOTE: SEE MATERIAL AND SAMPLE SYMBOLS LIST.

LEGEND:
- ▼GROUNDWATER, INITIALLY ENCOUNTERED
- ▼GROUNDWATER, STABILIZED
- RQD ROCK QUALITY DESIGNATION
- 15 21 25 SPT BLOW COUNTS

U.S. DEPARTMENT OF TRANSPORTATION
FEDERAL HIGHWAY ADMINISTRATION
EASTERN FEDERAL LANDS HIGHWAY DIVISION
STERLING, VIRGINIA

FORT BELVOIR - MULLIGAN ROAD
MULLIGAN ROAD OVER PINEY RUN

ENGINEERING GEOLOGY

© 2008, COMMONWEALTH OF VIRGINIA

6/18/2008 2:34:08 PM C:\PwWorking\PITT\dms9613\Geology5.dgn

REG	STATE	PROJECT	SHEET NO.
-	VA	VA-A-AD-48(1)	R65

Abutment B

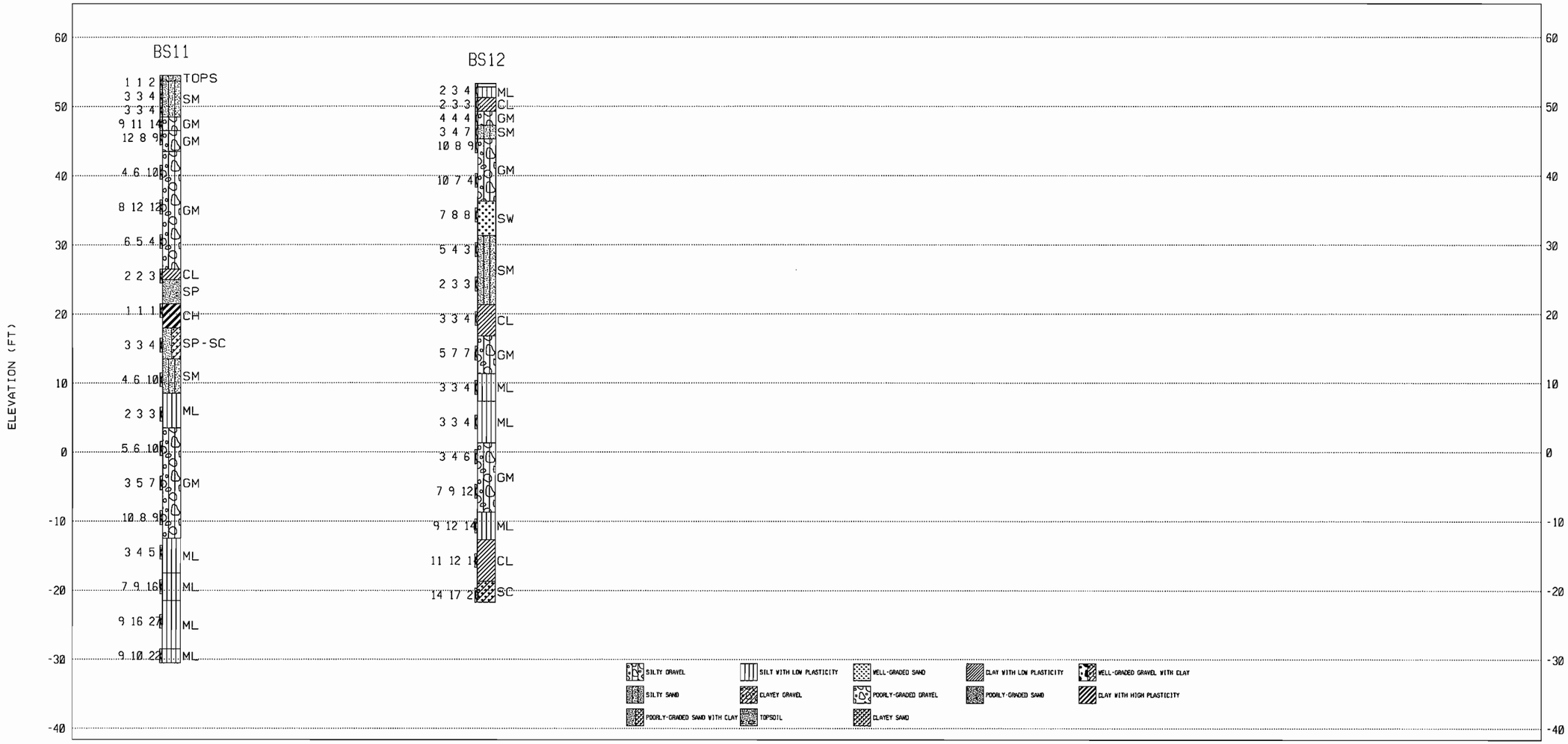

221+42
59 LT

221+38
20 LT

THE SUBSURFACE INFORMATION SHOWN ON THE BORING LOGS IN THESE PLANS WAS OBTAINED WITH REASONABLE CARE AND RECORDED IN GOOD FAITH SOLELY FOR USE BY THE DEPARTMENT IN ESTABLISHING DESIGN CONTROLS FOR THE PROJECT. THE DEPARTMENT HAS NO REASON TO SUSPECT THAT SUCH INFORMATION IS NOT REASONABLY ACCURATE AS AN APPROXIMATE INDICATION OF THE SUBSURFACE CONDITIONS AT THE SITES WHERE THE BORINGS WERE TAKEN. THE DEPARTMENT DOES NOT IN ANY WAY WARRANT OR GUARANTEE THAT SUCH DATA CAN BE PROJECTED AS INDICATIVE OF CONDITIONS BEYOND THE LIMITS OF THE BORINGS SHOWN; AND ANY SUCH PROJECTIONS BY BIDDERS ARE PURELY INTERPRETIVE AND ALTOGETHER SPECULATIVE. FURTHER, THE DEPARTMENT DOES NOT IN ANY WAY GUARANTEE, EITHER EXPRESSLY OR BY IMPLICATION, THE SUFFICIENCY OF THE INFORMATION FOR BID PURPOSES.

THE BORING LOGS ARE MADE AVAILABLE TO BIDDERS IN ORDER THAT THEY MAY HAVE ACCESS TO SUBSURFACE DATA IDENTICAL TO THOSE WHICH ARE POSSESSED BY THE DEPARTMENT, AND ARE NOT INTENDED AS A SUBSTITUTE FOR PERSONAL INVESTIGATION, INTERPRETATION AND JUDGMENT BY THE BIDDERS.

NOTES: SEE BOREHOLE LOGS FOR COMPLETE DATA.
SEE MATERIAL AND SAMPLE SYMBOLS LIST.

LEGEND:
▽ GROUNDWATER, INITIALLY ENCOUNTERED
▼ GROUNDWATER, STABILIZED
REC RECOVERY
RQD ROCK QUALITY DESIGNATION

15 21 25 SPT BLOW COUNTS

U.S. DEPARTMENT OF TRANSPORTATION
FEDERAL HIGHWAY ADMINISTRATION
EASTERN FEDERAL LANDS HIGHWAY DIVISION
STERLING, VIRGINIA

FORT BELVOIR - MULLIGAN ROAD
MULLIGAN ROAD OVER PINEY RUN

ENGINEERING GEOLOGY

6/18/2008 2:34:35 PM C:\PwWorking\PITT\dms9613\Geology6.dgn

REG	STATE	PROJECT	SHEET NO.
-	VA	VA-A-AD-48(1)	R66

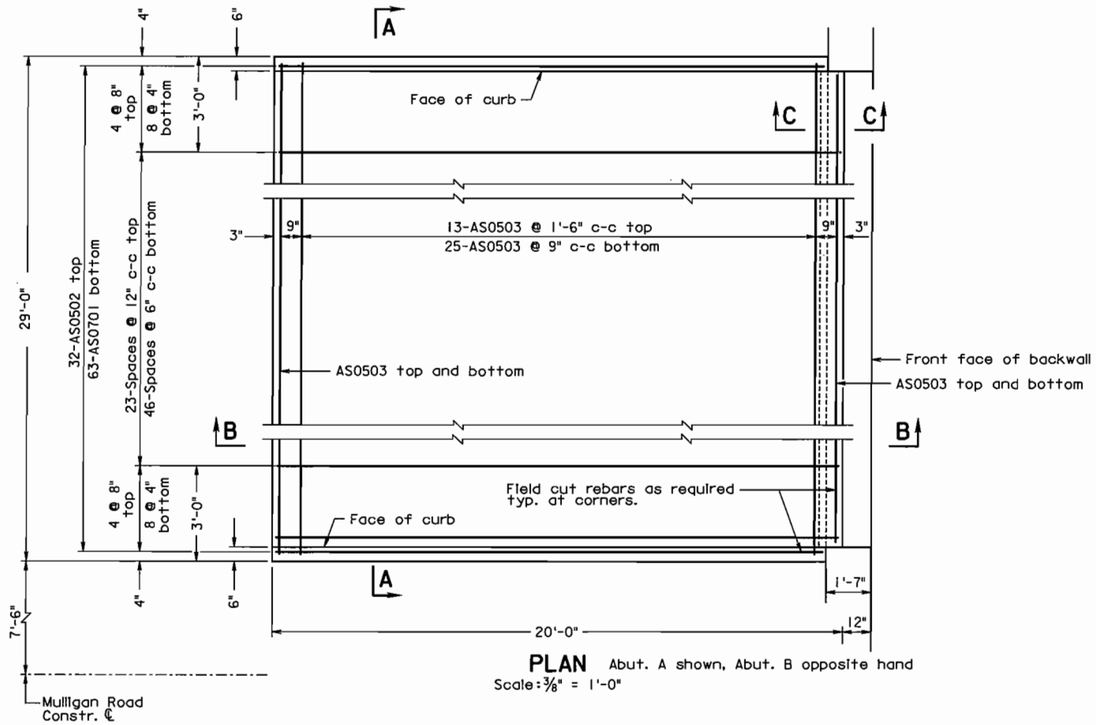

PLAN Abut. A shown, Abut. B opposite hand
Scale: 3/8" = 1'-0"

Notes:

Capacity: HL-93 loading.

All joints that are to be sealed shall be free of cracked and spalled areas and their faces shall be free of all foreign matter, curing compound, oils, greases and dirt. All faces must be sandblasted or brushed with a mechanical rotary wire brush. Just prior to sealing, the joint shall be blown out with oil-free compressed air.

Deformed reinforcing bars shall conform to ASTM A615, Grade 60. All reinforcing bar dimensions except for bending diagram are to centers of bars.

Prime aggregate base material with 0.35 gal. per sq. yd. Liquid Asphalt Material Type RC-70, RC-250 or MC-250 if aggregate base is exposed for more than two weeks.

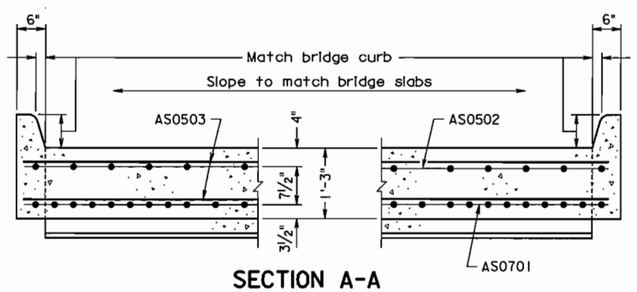

SECTION A-A
Scale: 3/4" = 1'-0"

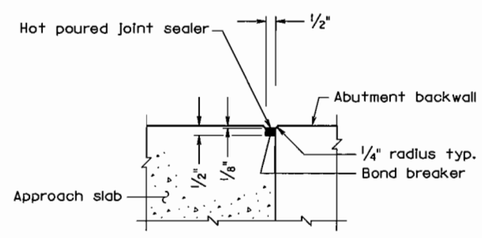

SECTION C-C
Scale: 3" = 1'-0"

REINFORCING STEEL SCHEDULE

Mark	No.	Size	Pin ø	Length	Location
AS0701	63	#7	——	19'-8"	Bottom longitudinal
AS0502	32	#5	——	19'-8"	Top longitudinal
AS0503	42	#5	——	28'-8"	Top and bottom transverse

The numbers of bars above are for one approach slab.

ESTIMATED QUANTITIES

	Concrete Class D(AE) fc' = 4000 psi SY ⊗	Reinforcing Steel LB ⊗
Abutment A	64.5	4450
Abutment B	64.5	4450
Totals	129.0	8900

⊗ Denotes items to be paid for on basis of plan quantities in accordance with FP-03 and current SCR.

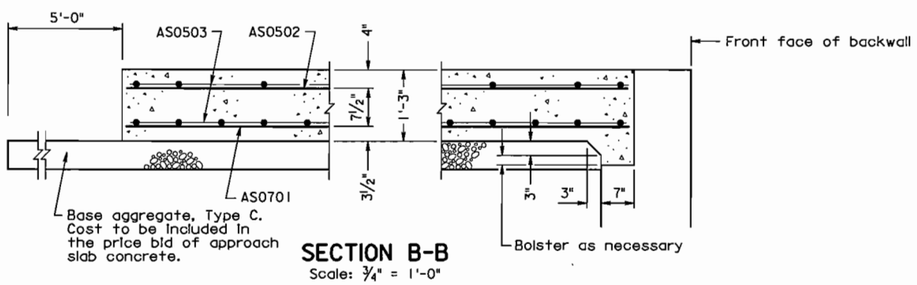

SECTION B-B
Scale: 3/4" = 1'-0"

Scale as noted

U.S. DEPARTMENT OF TRANSPORTATION
FEDERAL HIGHWAY ADMINISTRATION
EASTERN FEDERAL LANDS HIGHWAY DIVISION
STERLING, VIRGINIA

FORT BELVOIR - MULLIGAN ROAD
MULLIGAN ROAD OVER PINEY RUN

APPROACH SLABS
SBL

DET. E552-B

6/19/2008 11:29:17 AM C:\PWworking\PITT\dms96131\ds16S.dgn

REG	STATE	PROJECT	SHEET NO.
-	VA	VA-A-AD-48(1)	R67

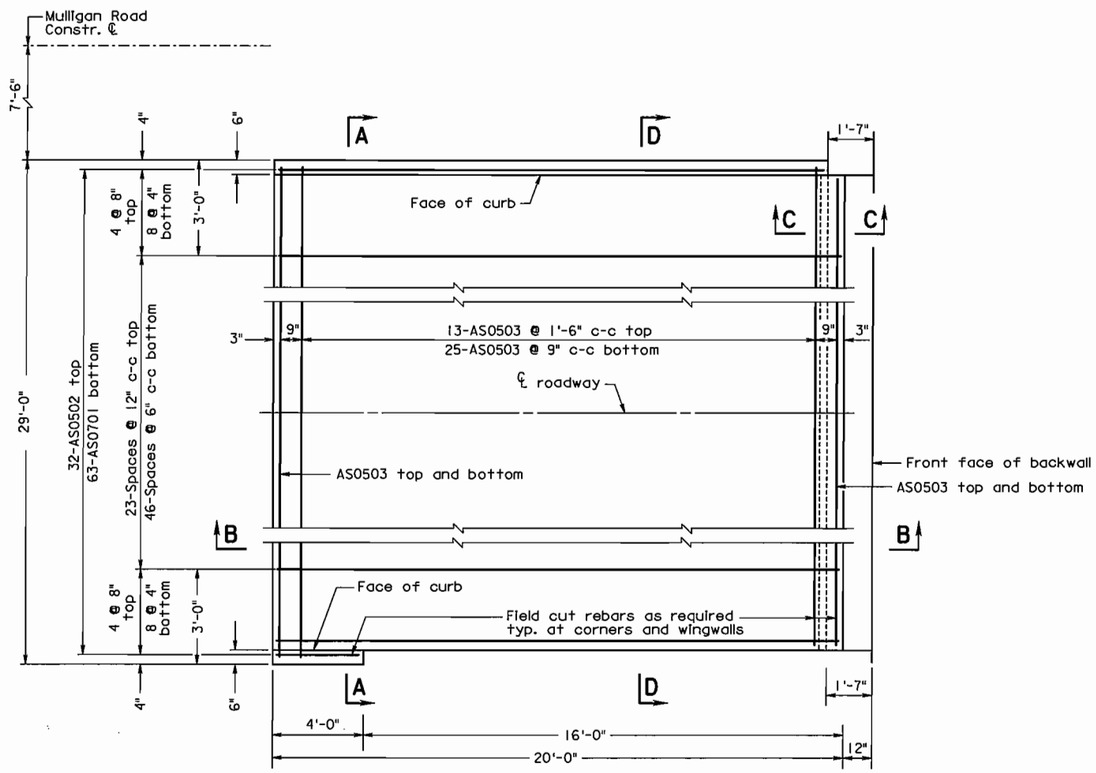

PLAN Abut. A shown, Abut. B opposite hand
Scale: 3/8" = 1'-0"

Notes:

Capacity: HL-93 loading.

All joints that are to be sealed shall be free of cracked and spalled areas and their faces shall be free of all foreign matter, curing compound, oils, greases and dirt. All faces must be sandblasted or brushed with a mechanical rotary wire brush. Just prior to sealing, the joint shall be blown out with oil-free compressed air.

Deformed reinforcing bars shall conform to ASTM A615, Grade 60. All reinforcing bar dimensions except for bending diagram are to centers of bars.

Prime aggregate base material with 0.35 gal. per sq. yd. Liquid Asphalt Material Type RC-70, RC-250 or MC-250 if aggregate base is exposed for more than two weeks.

REINFORCING STEEL SCHEDULE

Mark	No.	Size	Pin ø	Length	Location
AS0701	63	#7	——	19'-8"	Bottom longitudinal
AS0502	32	#5	——	19'-8"	Top longitudinal
AS0503	42	#5	——	28'-8"	Top and bottom transverse

The numbers of bars above are for one approach slab.

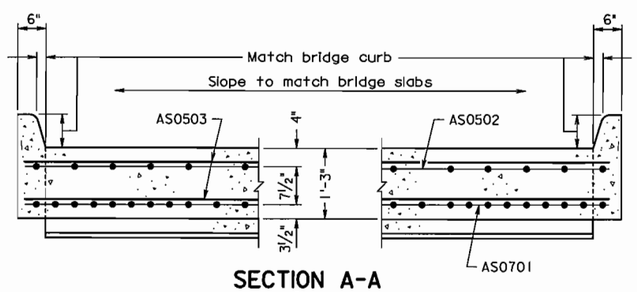

SECTION A-A
Scale: 3/4" = 1'-0"

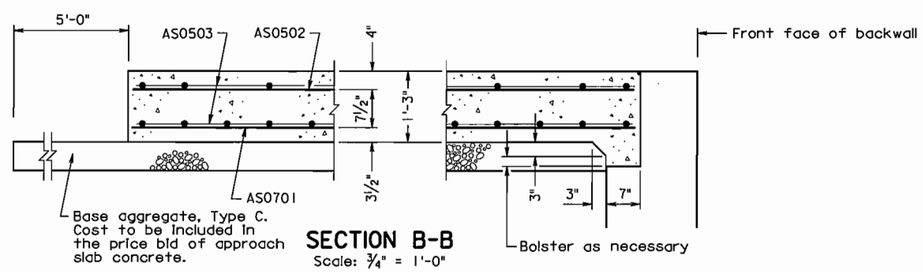

SECTION B-B
Scale: 3/4" = 1'-0"

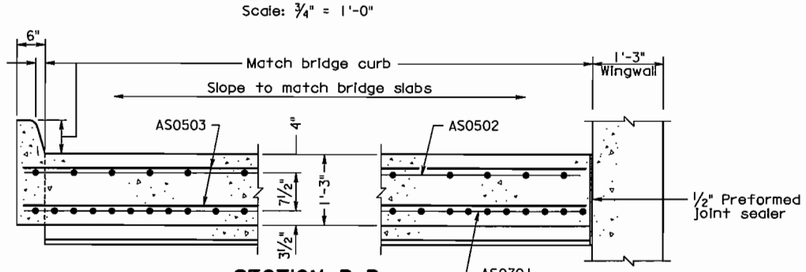

SECTION D-D
Scale: 3/4" = 1'-0"

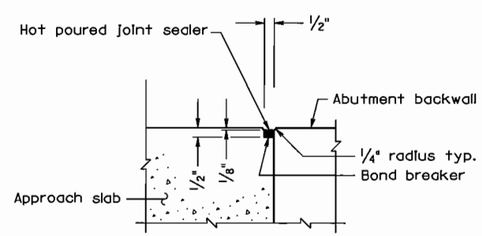

SECTION C-C
Scale: 3" = 1'-0"

ESTIMATED QUANTITIES

	Concrete Class D(AE) fc' = 4000 psi SY ⊗	Reinforcing Steel LB ⊗
Abutment A	64.5	4450
Abutment B	64.5	4450
Totals	129.0	8900

⊗ Denotes items to be paid for on basis of plan quantities in accordance with FP-03 and current SCR.

U.S. DEPARTMENT OF TRANSPORTATION
FEDERAL HIGHWAY ADMINISTRATION
EASTERN FEDERAL LANDS HIGHWAY DIVISION
STERLING, VIRGINIA

FORT BELVOIR - MULLIGAN ROAD
MULLIGAN ROAD OVER PINEY RUN

APPROACH SLABS
NBL

Scale as noted

DET. E552-B

6/19/2008 11:28:37 AM C:\PWworking\PITT\dms96131\bas16N.dgn

REG	STATE	PROJECT	SHEET NO.
–	VA	VA-A-AD-48(1)	S1

NOTE:

1. Use drainage ditch installation for low flow conditions only when specified on Erosion Control Plan.
2. Alternate preassembled silt fence options (geotextile, type V-B) will be allowed as long as specified dimensions are satisfied. Follow manufacturer's recommendations for installation procedures. All types must ensure silt fence remains attached to, and does not slide down, supporting posts.
3. Install silt fence along ground contours. Curve ends of silt fence upgrade to prevent water from running around the ends.
4. 10 ft. (max.) spacing with fence support.
   6 ft. (max.) spacing without fence support.

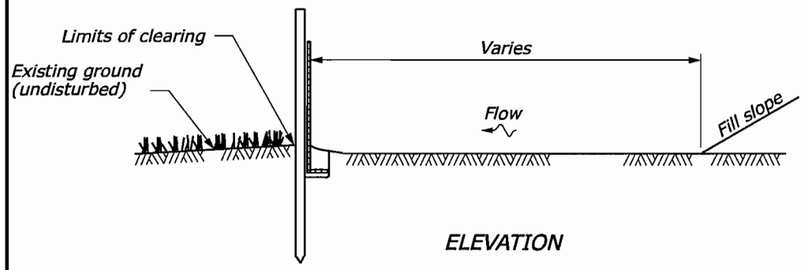

ELEVATION

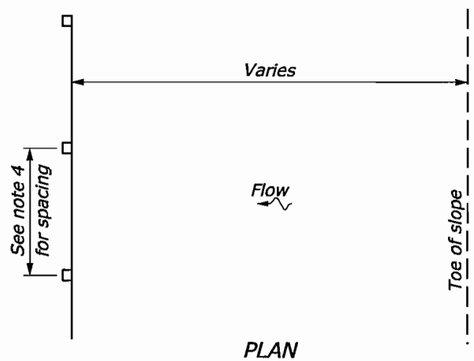

PLAN

SILT FENCE INSTALLATION AT TOE OF FILL

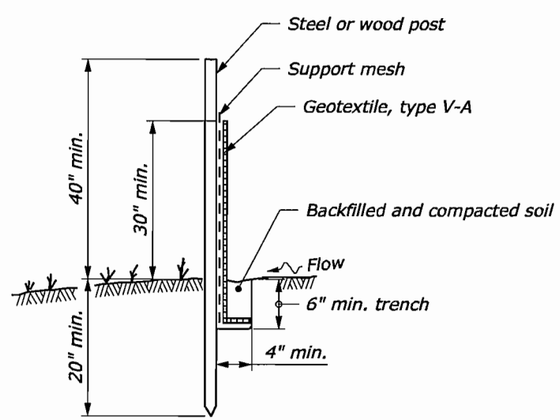

POST AND GEOTEXTILE INSTALLATION DETAIL

CONSTRUCTION SPECIFICATIONS:

Fencing shall be 42" in total height and constructed with chain link fencing. the specification for a 6' fence shall be used, substituting 42" fabric (33" above ground, 8" below ground) and 6' length posts.

1. The poles do not need to set in concrete.
2. Chain link fence shall be fastened securely to the fence posts with wire ties.
3. Filter fabric shall be fastened securely to the chain link fence with ties spaced every 24" at the top.
4. Filter fabric shall be embedded a minimum of 8" into the ground.
5. When two sections of filter fabric adjoin each other, they shall be overlapped by 6" and folded.
6. Maintenance shall be performed as needed and silt buildups removed when "bulges" develop in the silt diversion fence.

Note:
Fence post spacing shall not exceed 10' to center

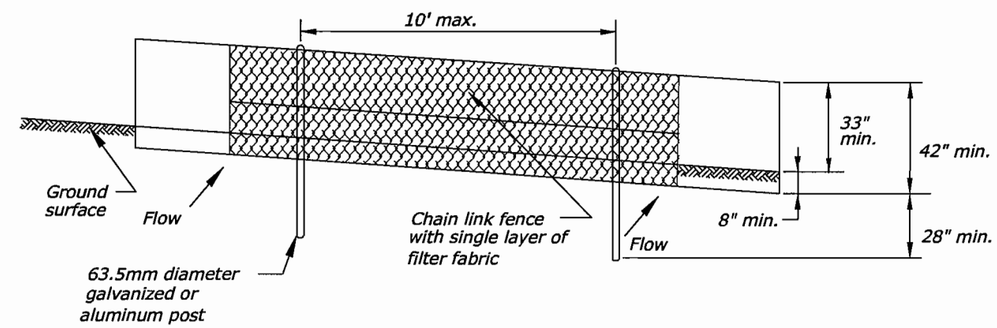

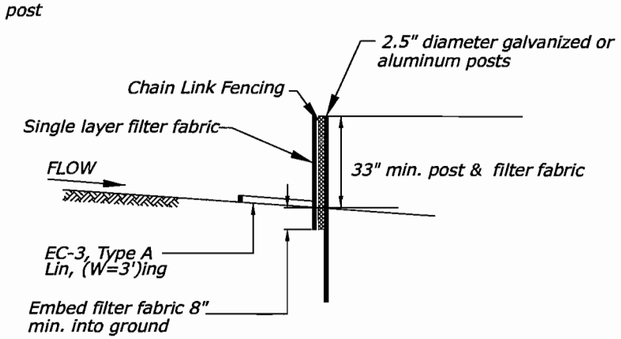

SUPER SILT FENCE

NO SCALE

U.S. DEPARTMENT OF TRANSPORTATION
FEDERAL HIGHWAY ADMINISTRATION
FEDERAL LANDS HIGHWAY

U.S. CUSTOMARY STANDARD

SILT FENCE

STANDARD APPROVED FOR USE 6/2005
REVISED: 6/2007

STANDARD 157-1

6/16/2008 9:22:38 AM c:\pwworking\pitt\dms81082\st157A.dgn

REG	STATE	PROJECT	SHEET NO.
-	VA	VA-A-AD-48(1)	S2

NOTE:

1. See Erosion Control Section for temporary culvert diameter, riprap class, channel dimensions and quantities.
2. Use plastic liner or riprap along the entire length and width of the temporary diversion channel.
3. Construct channel at a minimum grade of 0.5 percent.
4. Do not construct with longitudinal joints if using a plastic liner. Bury the upstream edge of the liner a minimum of 6" deep and secure with riprap or sandbags.
5. When specified replace the portion of the diversion channel through the roadway embankment with temporary culvert. Compact temporary culvert backfill using one of the methods listed in Subsection 204.11(a).

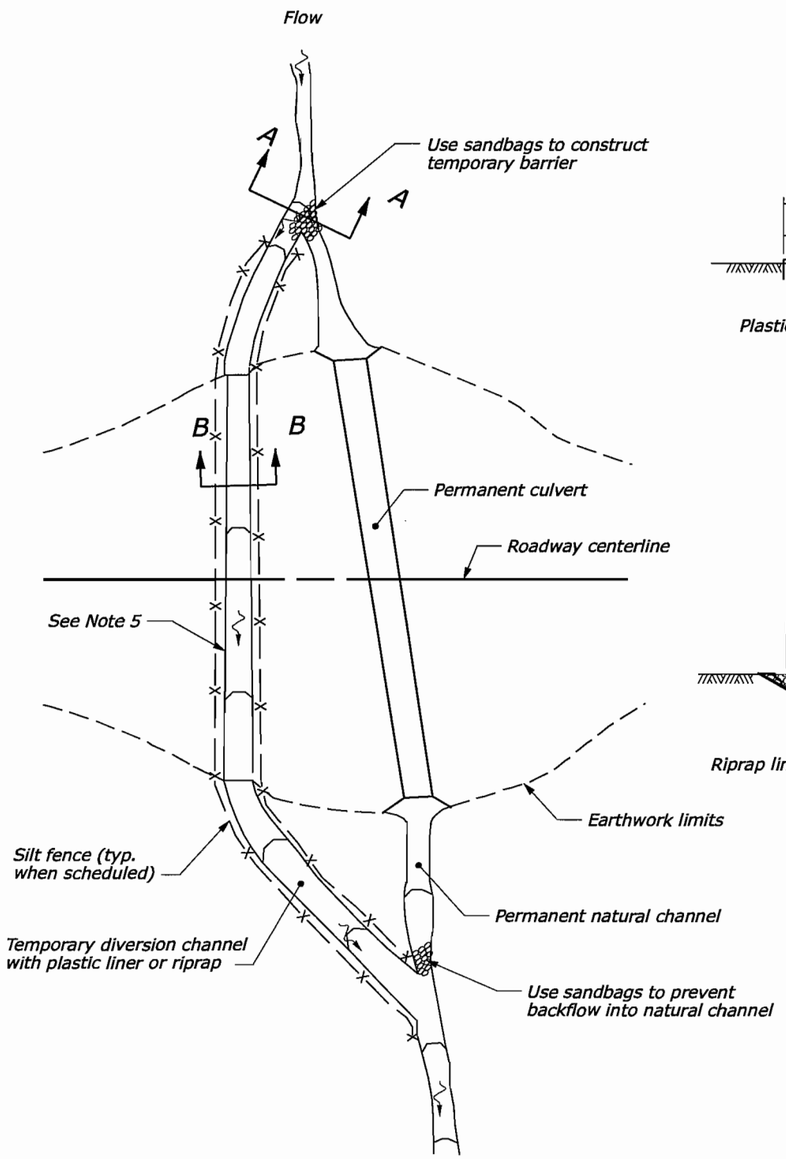

PLAN

DIVERSION CHANNEL

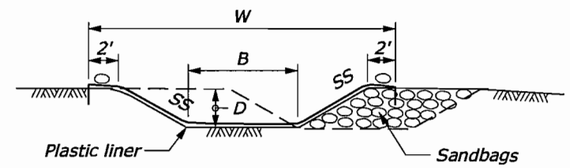

SECTION A-A

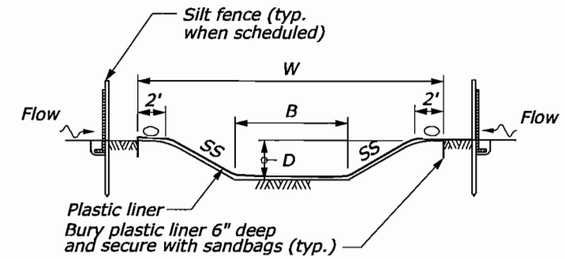

SECTION B-B

PLASTIC LINED DIVERSION CHANNEL

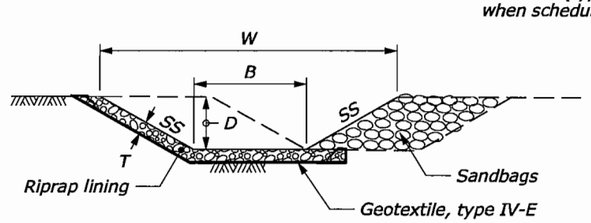

SECTION A-A

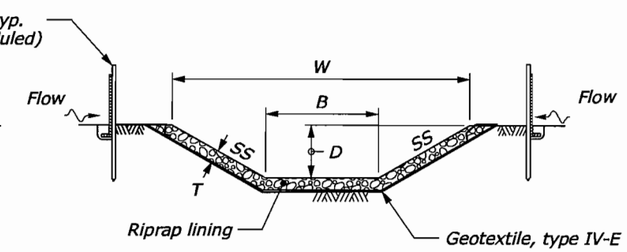

SECTION B-B

RIPRAP LINED DIVERSION CHANNEL

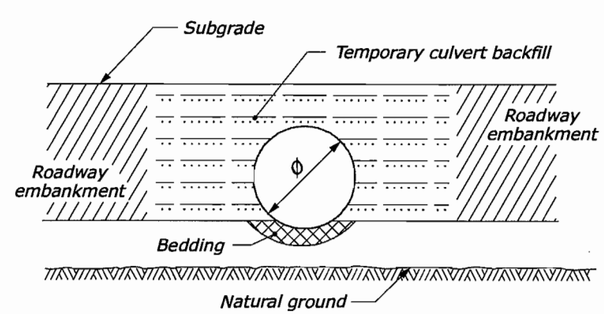

SECTION B-B

TEMPORARY CULVERT

NO SCALE

U.S. DEPARTMENT OF TRANSPORTATION
FEDERAL HIGHWAY ADMINISTRATION
FEDERAL LANDS HIGHWAY

U.S. CUSTOMARY STANDARD

TEMPORARY DIVERSION CHANNELS

STANDARD APPROVED FOR USE 6/2005
REVISED: 6/2007

STANDARD 157-5

6/6/2008 12:14:33 PMC:\PWworking\PITT\dms81082\st157C.dgn

REG	STATE	PROJECT	SHEET NO.
-	VA	VA-A-AD-48(1)	S3

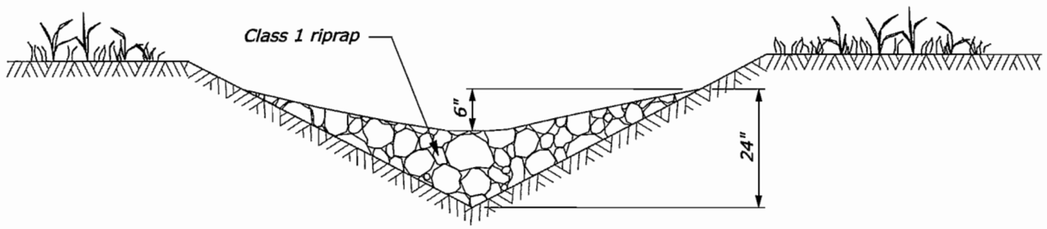

CROSS SECTION

V DITCH

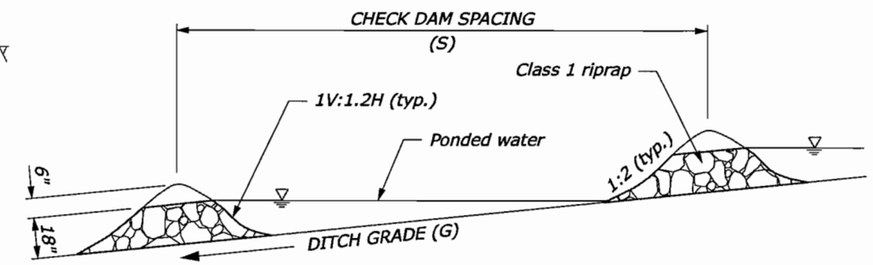

PROFILE VIEW

DITCH

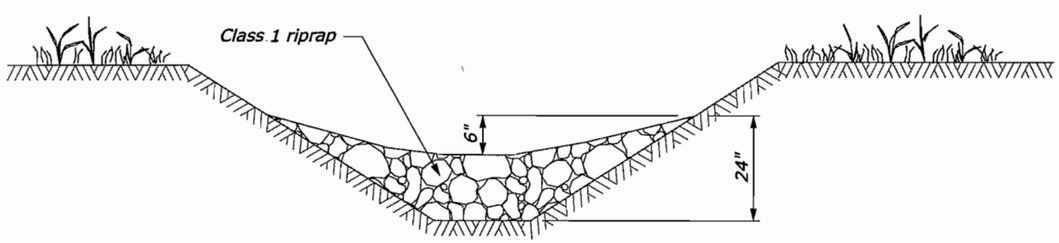

CROSS SECTION

TRAPEZOIDAL DITCH

DITCH GRADE * (G)	CHECK DAM SPACING S (ft)
2%	75
3%	50
4%	40
5%	30
6%	25

* Do not use Check Dams below 2% or above 6% ditch grades

NO SCALE

U.S. DEPARTMENT OF TRANSPORTATION
FEDERAL HIGHWAY ADMINISTRATION
FEDERAL LANDS HIGHWAY

U.S. CUSTOMARY STANDARD

CHECK DAM

STANDARD APPROVED FOR USE 6/2005
REVISED: 6/2007

STANDARD
157-6

6/6/2008 12:15:20 PMC:\PWworking\PITT\dms81082\st157D.dgn

REG	STATE	PROJECT	SHEET NO.
-	VA	VA-A-AD-48(1)	S4

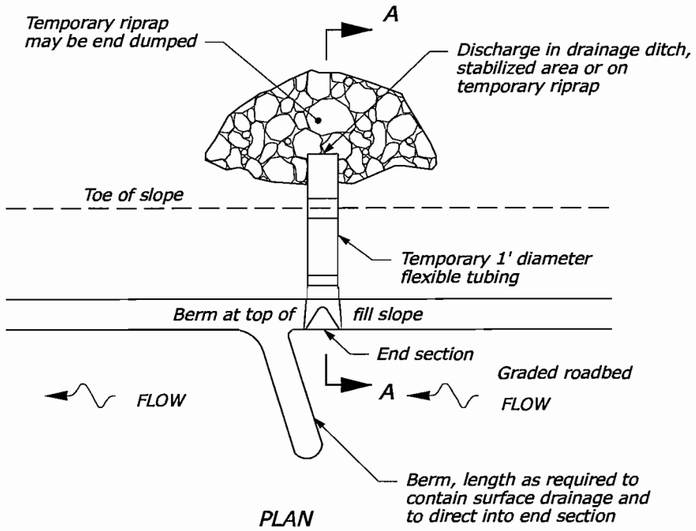

SLOPE DRAINS

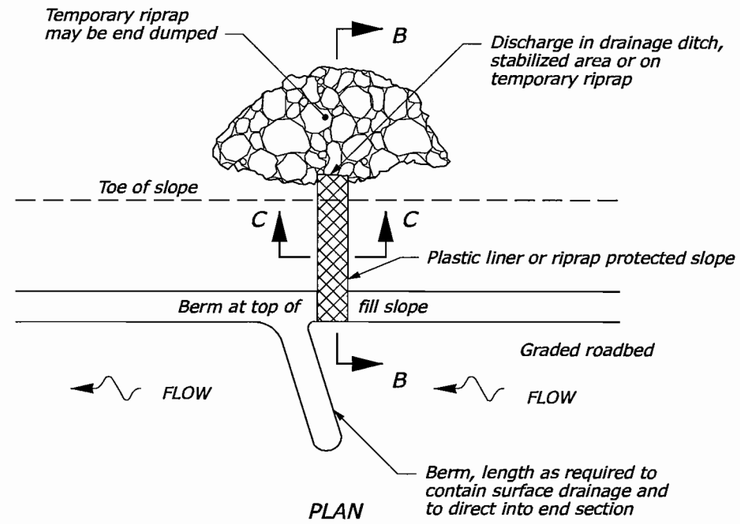

PLASTIC LINED WATERWAY

NOTE:

1. Use temporary slope drains (berms, drains, and riprap) as the embankment is constructed. Use spacings as shown on the Erosion Control Plans or as designated by the CO. Place all slope drains at the end of each work shift. Use slope drains until the slopes are permanently stabilized.
2. Construct temporary berms at the top of all erodible cut slopes as shown on the Erosion Control Plans or as designated by the CO. Use check dams to reduce the runoff velocity when existing grades are steep.
3. Do not use transverse or longitudinal joints in plastic liner. Plastic liner is not required for rock embankments.
4. Use toe-of-fill slope berms to divert offsite runoff away from disturbed areas.
5. Seed and mulch all cut slope berms and toe-of-fill berms immediately after berm construction.
6. Use Class 2 temporary riprap.

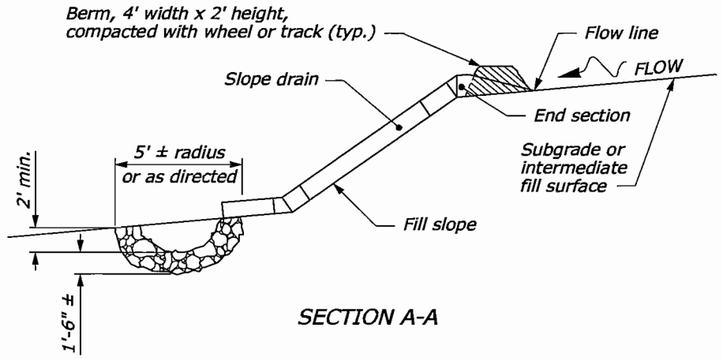

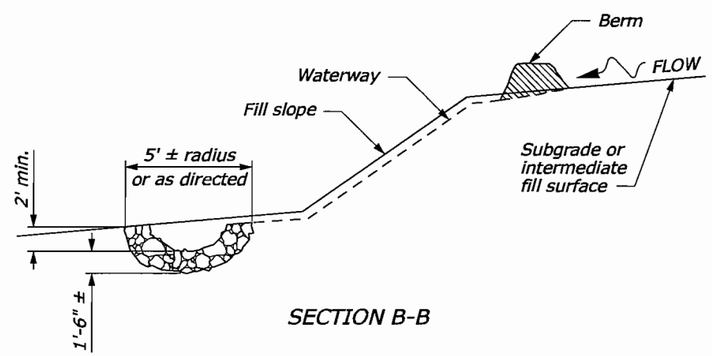

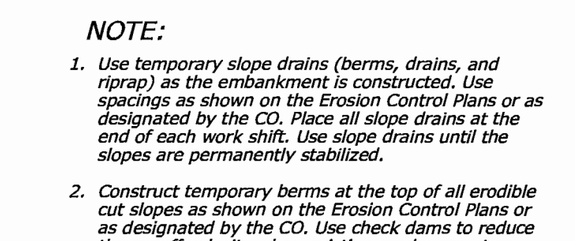

TOE-OF-FILL SLOPE BERM

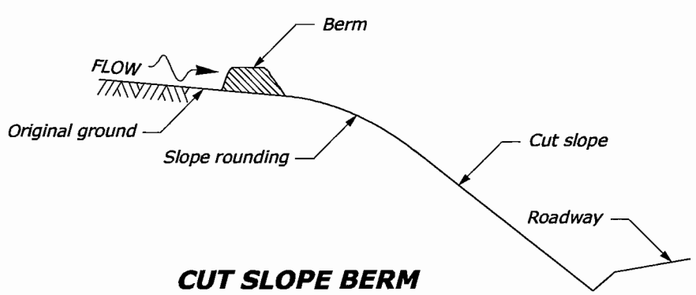

CUT SLOPE BERM

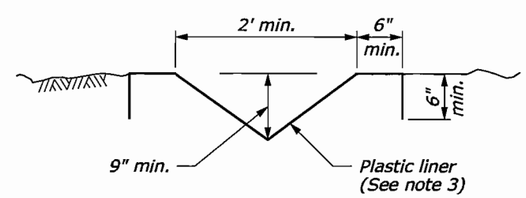

SECTION C-C

NO SCALE

U.S. DEPARTMENT OF TRANSPORTATION
FEDERAL HIGHWAY ADMINISTRATION
FEDERAL LANDS HIGHWAY

U.S. CUSTOMARY STANDARD

TEMPORARY EROSION CONTROL BERMS, SLOPE DRAINS, AND LINED WATERWAYS

STANDARD APPROVED FOR USE 6/2005

REVISED:

STANDARD 157-7

6/6/2008 12:16:05 PMC:\PWworking\PITT\dms81082\st157E.dgn

REG	STATE	PROJECT	SHEET NO.
-	VA	VA-A-AD-48(1)	S5

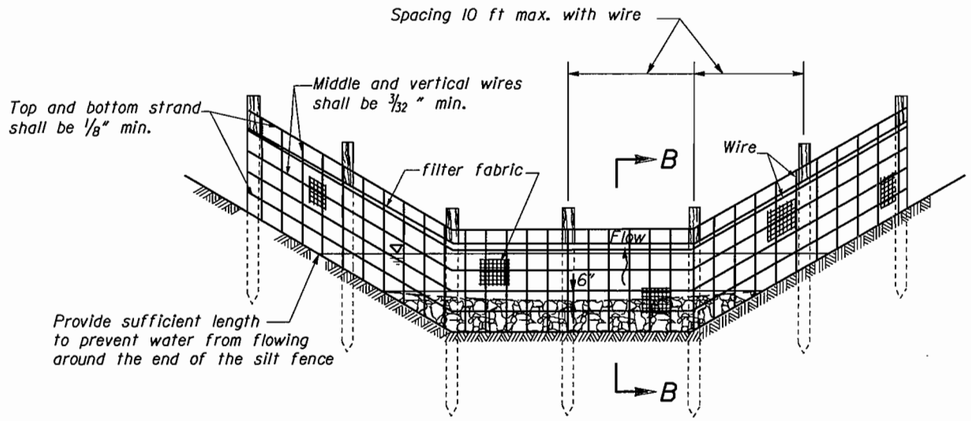

WIRE-BACKED SILT FENCE CHECK DAM
(See note 2)

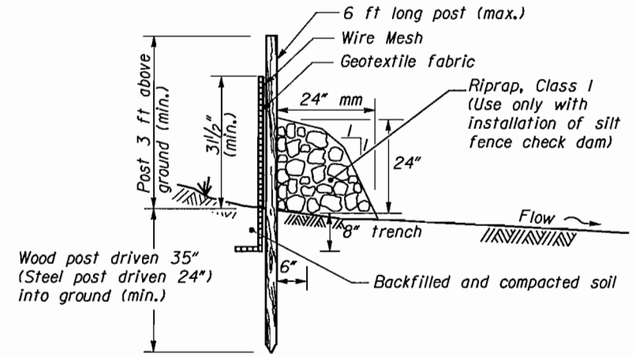

SECTION B-B

NOTES:

1. Use silt fence check dam installation for low flow conditions only when specified on Erosion Control Plan.
2. Alternate pre-assembled silt fence options will be allowed as long as specified minimums are satisfied. Follow manufacturer's information for installation procedures.
3. Wire mesh shall be a minimum of 32 inches in width and shall have a minimum of 6 line wires with 12 inch stay spacing.
4. Filter fabric shall be a minimum of 45 inches in width and shall be fastened adequately to the wire as directed by the CO.
5. Steel post shall be 60 inches minimum in height and be of the self-fastener angle steel type.
6. Wood post shall be 70 inches minimum in height and 3 inches in diameter.
7. Extend wire and fabric into trench.

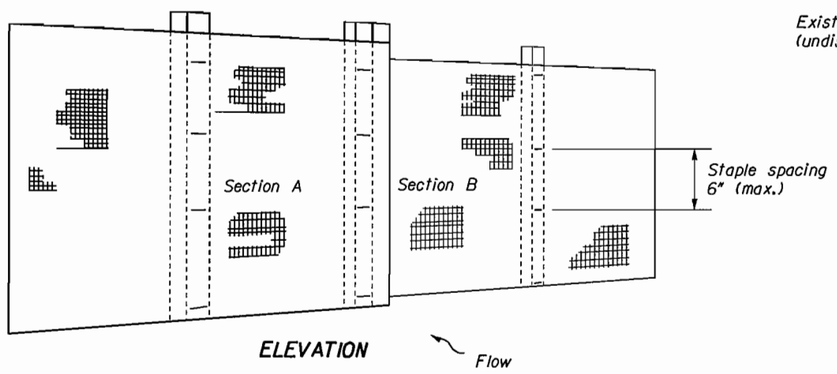

ELEVATION

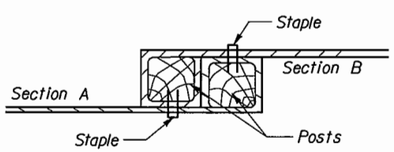

PLAN

JOINING TWO ADJACENT SILT FENCE SECTIONS

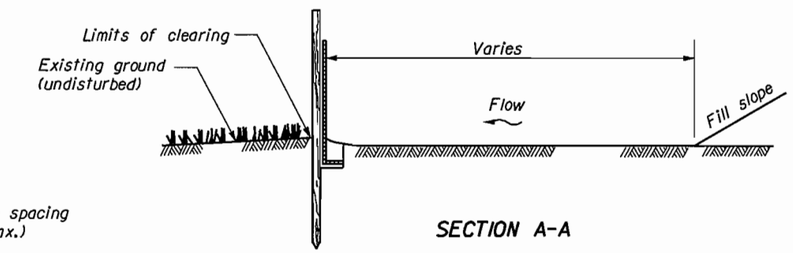

SECTION A-A

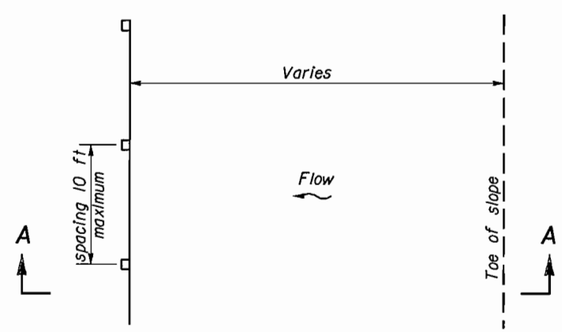

PLAN

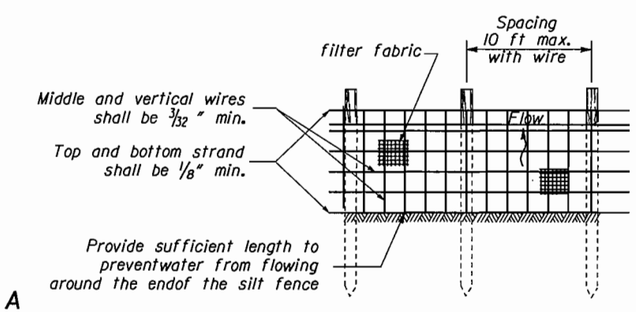

ELEVATION

WIRE-BACKED SILT FENCE INSTALLATION AT TOE OF FILL

NO SCALE

U.S. DEPARTMENT OF TRANSPORTATION
FEDERAL HIGHWAY ADMINISTRATION
EASTERN FEDERAL LANDS HIGHWAY DIVISION

DETAIL

WIRE-BACKED SILT FENCE

DETAIL APPROVED FOR USE --/----

REVISED: 6/99

DETAIL
E157-A

6/10/2008 1:21:29 PM C:\PWworking\PITT\dms8108\d1157x02.dgn

REG	STATE	PROJECT	SHEET NO.
-	VA	VA-A-AD-4B(1)	S6

TEMPORARY SEDIMENT TRAP DETAIL SHEET

TEMPORARY SEDIMENT TRAP TABLE

	SEDIMENT TRAP INFORMATION	SECTION THRU TEMPORARY SEDIMENT TRAP	SECTION THRU WEIR	SIDE SLOPES (SS)	WET STORAGE ELEV. (C)	DRY STORAGE ELEV. (B)	ESTIMATED QUANTITES: SEDIMENT BASIN EXCAVATION CU. YARDS	SILTATION CONTROL EXCAVATION CU. YARDS	DRY RIP RAP CLASS 2 TONS	REMARKS
SHEET NO. STATION NO. TRAP NO.	M6 M6-1	B= VARIES W= VARIES ELEV. D= 115 T= 3	L= 12 Elev. B = 117.52	2.0	116.38	117.52	463	245	25	SEE SHEET M6 FOR GRADING PLAN
SHEET NO. STATION NO. TRAP NO.	M7 M7-1	B= VARIES W= VARIES ELEV. D= 125 T= 3	L= 12 Elev. B = 127.79	2.0	126.76	127.79	303	281	24	SEE SHEET M7 FOR GRADING PLAN
SHEET NO. STATION NO. TRAP NO.	M12 M12-1	B= VARIES W= VARIES ELEV. D= 63 T= 3	L= 12 Elev. B = 66.04	2.0	64.83	66.10	250	125	14	SEE SHEET M12 FOR GRADING PLAN
TOTAL							1016	651	63	

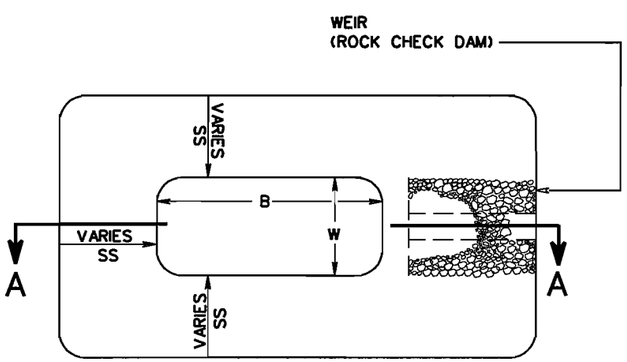

PLAN VIEW OF TEMPORARY SEDIMENT TRAP

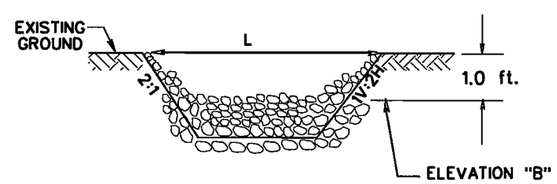

TYPICAL SECTION THRU WEIR
(ROCK CHECK DAM TYPE 1)

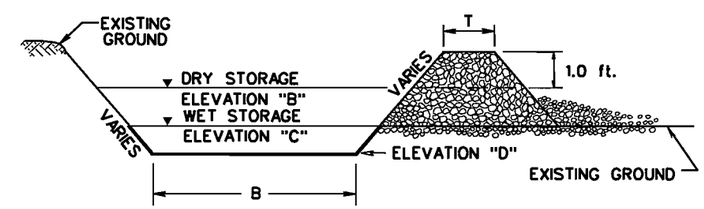

TYPICAL SECTION (AA) THRU
TEMPORARY SEDIMENT TRAP

U.S. DEPARTMENT OF TRANSPORTATION
FEDERAL HIGHWAY ADMINISTRATION
EASTERN FEDERAL LANDS HIGHWAY DIVISION

DETAIL

SEDIMENT TRAP

DETAIL APPROVED FOR USE --/----

REVISED:

DETAIL
E157-B

$$$$DATE$$$$ 3:59:24 PM C:\PWworking\PITT\dms81081\Detail_SMW_3.dgn

REG	STATE	PROJECT	SHEET NO.
-	VA	VA-A-AD-48(1)	S7

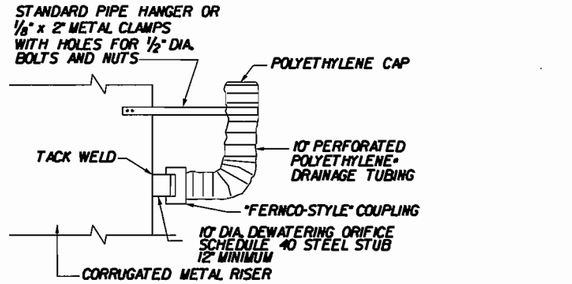

* DRAINAGE TUBING SHALL COMPLY WITH ASTM F667 AND AASHTO M294

TEMPORARY SEDIMENT BASIN OUTFALL STRUCTURE DEWATERING SYSTEM DETAIL

NOT TO SCALE

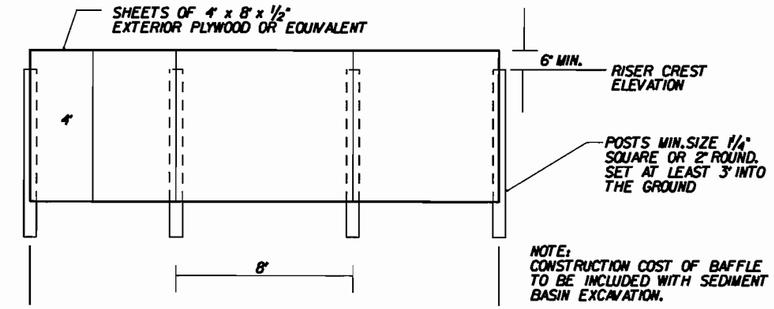

PLYWOOD BAFFLE INSIDE SEDIMENT BASINS & TRAPS

NOT TO SCALE

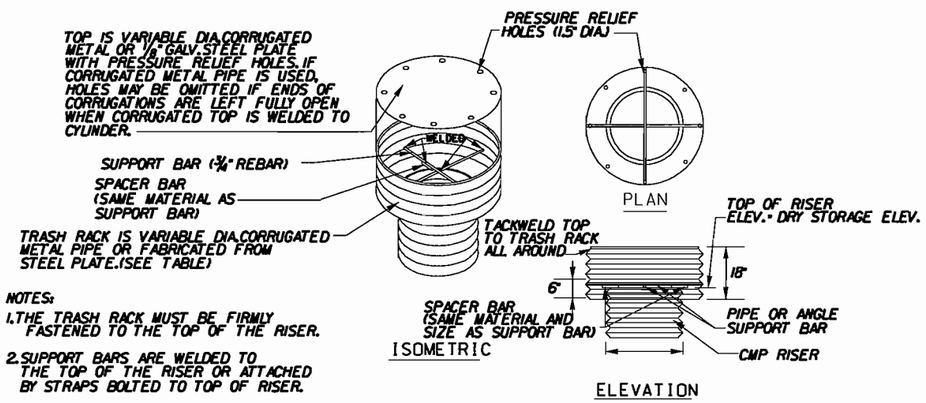

NOTES:

1. THE TRASH RACK MUST BE FIRMLY FASTENED TO THE TOP OF THE RISER.
2. SUPPORT BARS ARE WELDED TO THE TOP OF THE RISER OR ATTACHED BY STRAPS BOLTED TO TOP OF RISER.

TRASH RACK AND ANTI-VORTEX DEVICE (FOR TEMPORARY SEDIMENT BASINS)

NOT TO SCALE

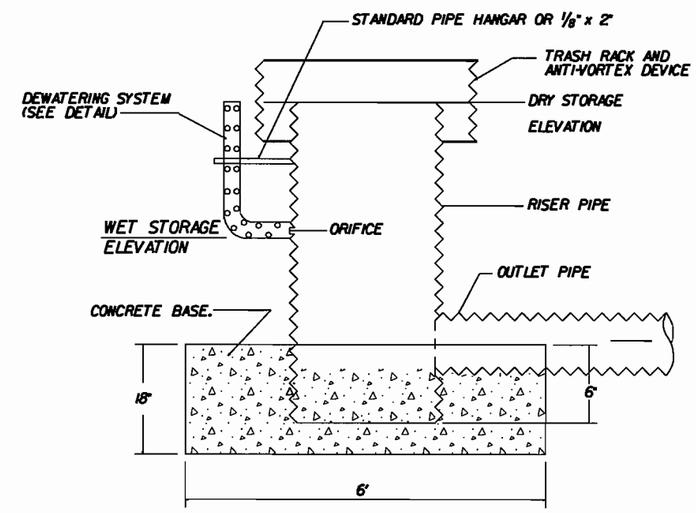

RISER DETAIL FOR TEMPORARY SEDIMENT BASINS 1 & 2

NOT TO SCALE

TABLE 2

TEMPORARY SEDIMENT BASIN DATA

BASIN NO.	STATION	RISER PIPE			OUTFALL PIPE DIAMETER	STD. EC-1 CLASS I RIPRAP APRON	DEWATERING DEVICE		TOP OF EMERGENCY SPILLWAY ELEVATION	SILTATION CONTROL EXCAVATION	SEDIMENT BASIN EXCAVATION
		INV.	LENGTH	DIAMETER	D	L3	WET STORAGE ELEVATION	DRY STORAGE ELEVATION			
UNIT		ft	ft	Inches	Inches	ft	ft	ft	ft	c.y.	c.y.
									SUBTOTAL		

U.S. DEPARTMENT OF TRANSPORTATION
FEDERAL HIGHWAY ADMINISTRATION
EASTERN FEDERAL LANDS HIGHWAY DIVISION

DETAIL

DETAILS

DETAIL APPROVED FOR USE --/----

REVISED:

DETAIL E157-C

6/10/2008 1:23:31 PM C:\PWworking\PITT\dms8108\E&S_DETAIL.dgn

REG	STATE	PROJECT	SHEET NO.
-	VA	VA-A-AD-4B(1)	SB

ESC-INS

SUGGESTED METHOD OF TEMPORARILY PLACING RIPRAP FOR EROSION CONTROL IN CHANNELS, DITCHES, & AT TOE OF FILL SLOPES

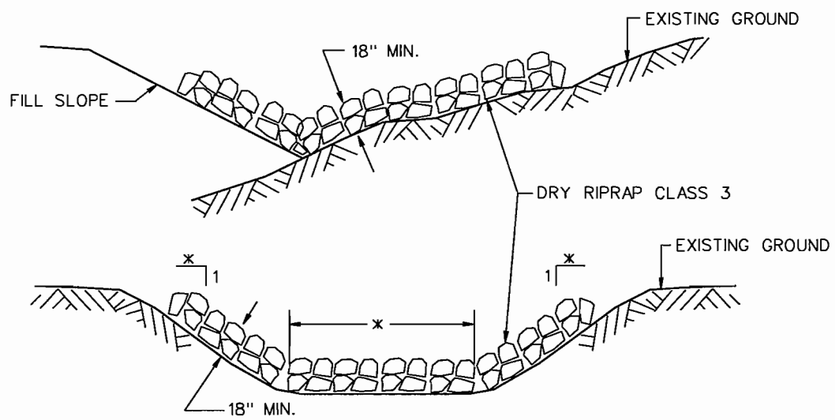

NOTES:

1. THE DEPTH OF PROTECTION WILL DEPEND ON WHATEVER DEPTH IS ATTAINABLE, WITH THE RIPRAP BEING EVENLY SPREAD WITH THE QUANTITY SHOWN ON THESE PLANS. RIPRAP MAY BE ADDED OR DELETED AS FOUND NECESSARY BY THE ENGINEER.

* SIDE SLOPES AND BOTTOM WIDTH (IF TRAPEZOIDAL) SHOWN IN TYPICAL SECTION OF PROPOSED DITCH OR CHANNEL.

MINIMUM REQUIREMENTS FOR STABILIZED CONSTRUCTION ENTRANCE

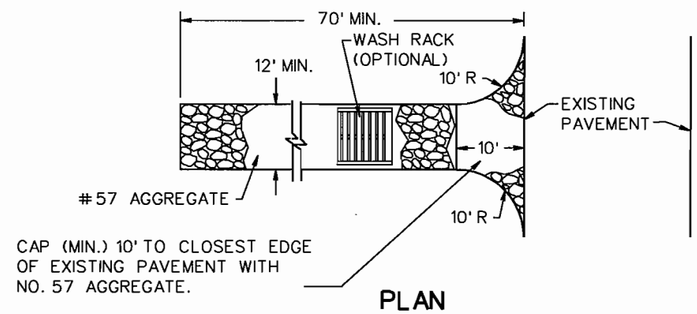

PLAN

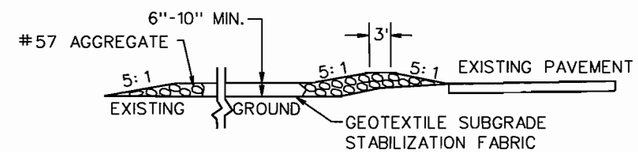

PROFILE

1. SURFACE WATER SHALL BE PIPED UNDER THE CONSTRUCTION ENTRANCE. IF PIPING IS IMPRACTICAL, A MOUNTABLE BERM WITH 5:1 SLOPES WILL BE PERMITTED.

2. THE ENTRANCE SHALL BE MAINTAINED IN A CONDITION WHICH WILL PREVENT TRACKING OR FLOWING OF SEDIMENT ONTO PUBLIC RIGHT OF WAY. THIS MAY REQUIRE PERIODIC TOP DRESSING WITH ADDITIONAL STONE AS CONDITIONS DEMAND AND REPAIR AND/OR CLEANOUT OF ANY MEASURES USED TO TRAP SEDIMENT. ALL SEDIMENT SPILLED, DROPPED, WASHED OR TRACKED ONTO PUBLIC RIGHT OF WAY SHALL BE REMOVED IMMEDIATELY.

3. WHEELS SHALL BE CLEANED TO REMOVE SEDIMENT PRIOR TO ENTRANCE ONTO PUBLIC RIGHT OF WAY. WHEN WASHING IS REQUIRED, IT SHALL BE DONE ON AN AREA STABILIZED WITH STONE AND WHICH DRAINS INTO AN APPROVED SEDIMENT TRAPPING DEVICE.

4. PERIODIC INSPECTION AND NEEDED MAINTENANCE SHALL BE PROVIDED AFTER HEAVY USE AND EACH RAIN.

SPECIFICATION REFERENCE
107 303

TEMPORARY EROSION & SILTATION CONTROL

REV. 7/04

115.01

U.S. DEPARTMENT OF TRANSPORTATION
FEDERAL HIGHWAY ADMINISTRATION
EASTERN FEDERAL LANDS HIGHWAY DIVISION

DETAIL

TEMPORARY CONSTRUCTION ENTRANCE

DETAIL APPROVED FOR USE --/----

DETAIL
E157-D

6/16/2008 11:43:45 AM C:\PWworking\PITT\dms81081\Const-Ent.dgn

REG	STATE	PROJECT	SHEET NO.
-	VA	VA-A-AD-48(1)	S9

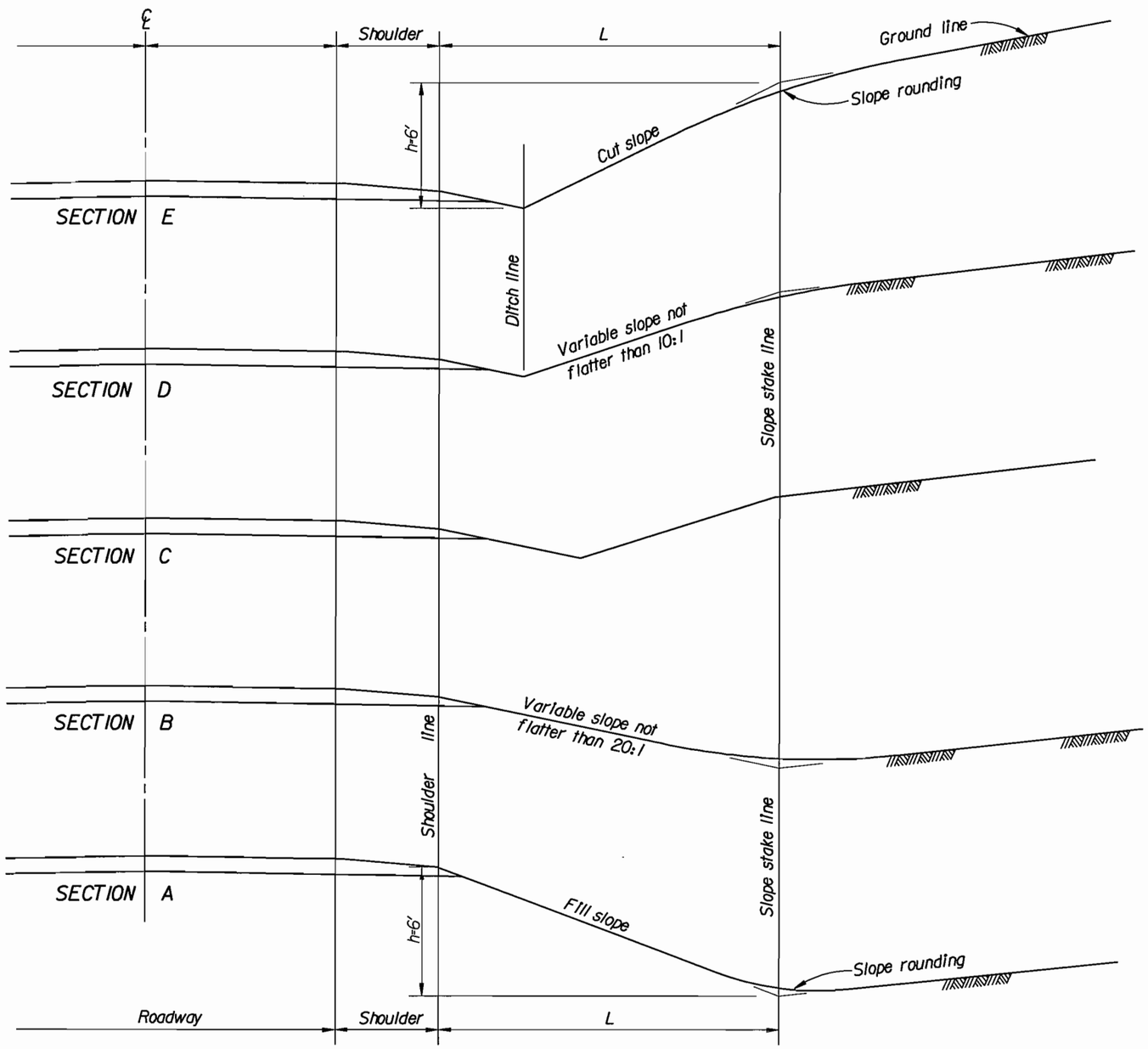

Note :
Distance L is to be maintained as the distance to slope stakes to establish the blend of cut and fill slopes into the original ground.

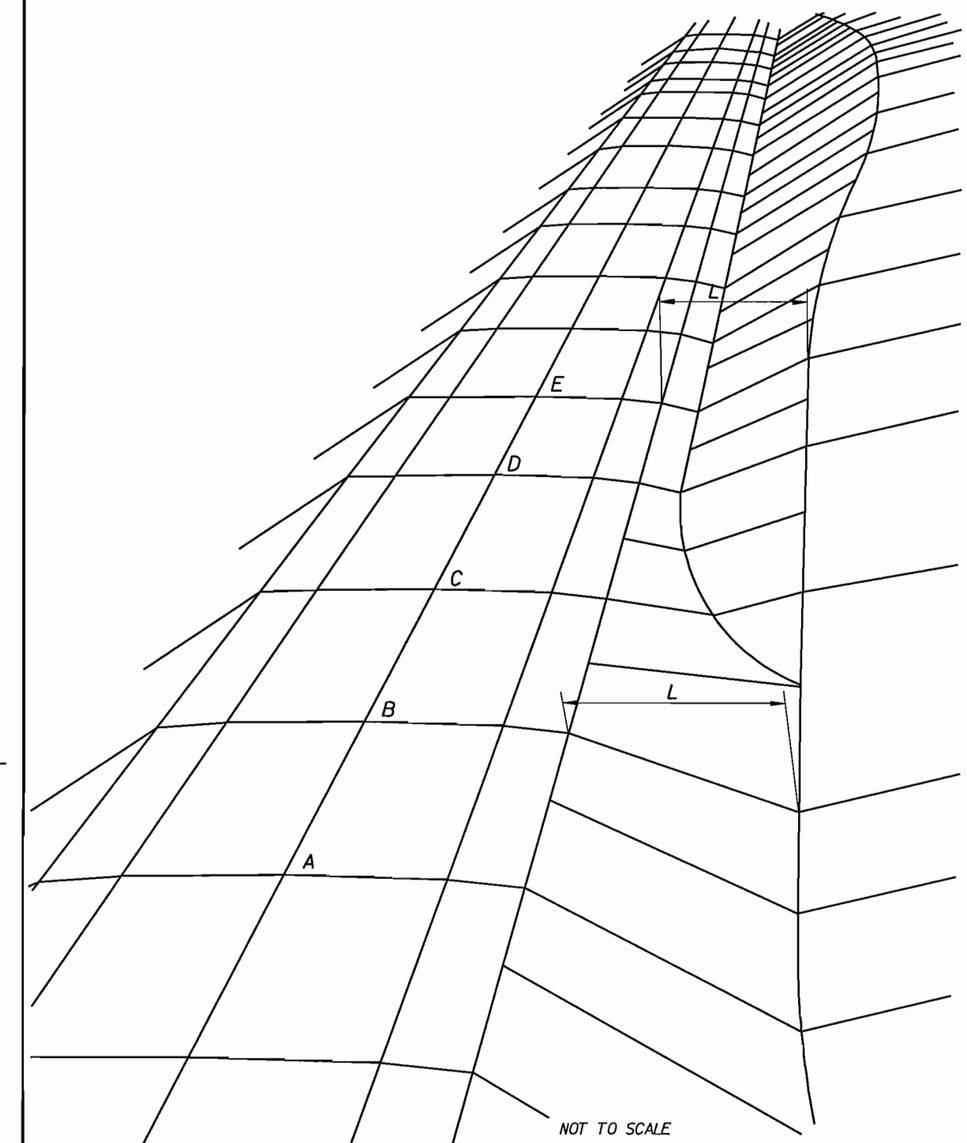

NOT TO SCALE

U.S. DEPARTMENT OF TRANSPORTATION
FEDERAL HIGHWAY ADMINISTRATION
EASTERN FEDERAL LANDS HIGHWAY DIVISION

DETAIL

CUT AND FILL SLOPE TRANSITIONS

DETAIL APPROVED FOR USE --/----

REVISED:

DETAIL
E204-A

6/6/2008 12:28:48 PM C:\PWworking\PITT\dms8108\d1204Adgn

REG	STATE	PROJECT	SHEET NO.
-	VA	VA-A-AD-4B(1)	S10

EC-1

DETAIL 1

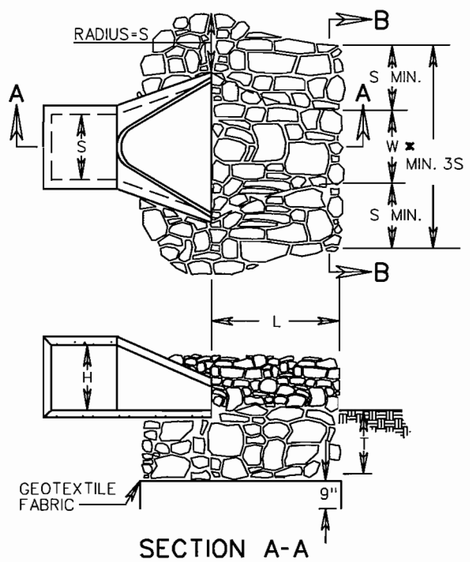

SECTION A-A

DETAIL 2

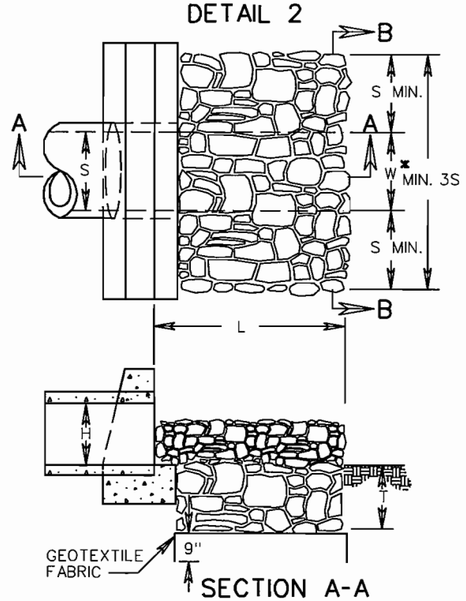

SECTION A-A

DETAIL 3

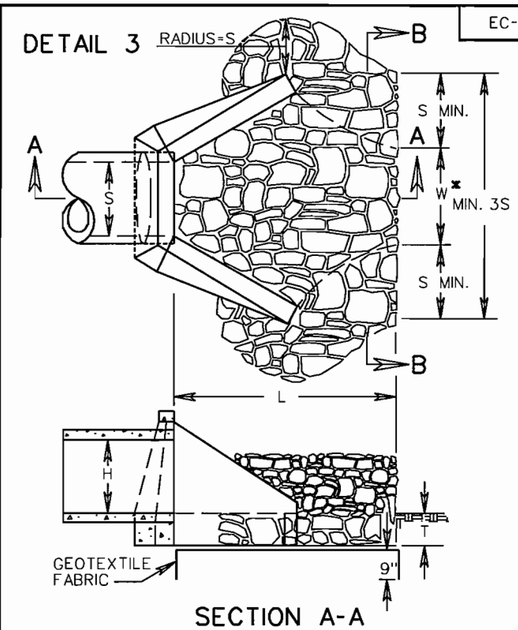

SECTION A-A

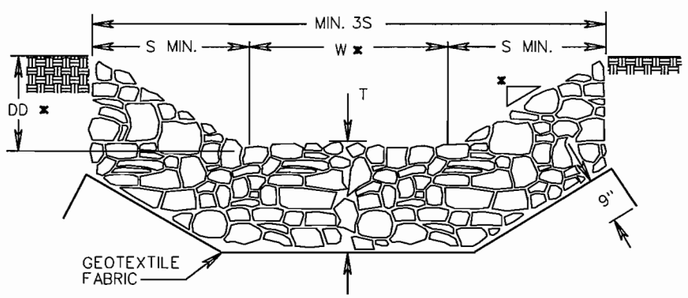

SECTION B-B

TYPE OF OUTLET PROTECTION MATERIAL		MAXIMUM OUTLET VELOCITY (FOR DESIGN STORM)	MINIMUM "T" (INCHES)
CLASS A1	CLASS A1 DRY RIPRAP	8 fps	18
CLASS I	CLASS I DRY RIPRAP	14 fps	24
CLASS II	CLASS II DRY RIPRAP	19 fps	36

NOTES:

1. FOR MULTIPLE LINE INSTALLATIONS, DIMENSION S IS TO GOVERN THE PROTECTION OUTSIDE THE CHANNEL WIDTH (W).
2. ON ANY INSTALLATION REQUIRING CULVERT OUTLET PROTECTION WHERE NO ENDWALL OR ENDSECTION IS SPECIFIED ON THE PLANS, CONSTRUCTION IS TO BE IN ACCORDANCE WITH DETAIL 2 SHOWN ABOVE.
3. GEOTEXTILE FABRIC TO BE INSTALLED UNDER CLASS A1, I, AND II MATERIALS IN ACCORDANCE WITH THE SPECIFICATIONS.
4. S = DIAMETER OF CIRCULAR CULVERT OR SPAN FOR BOX, ELLIPTICAL OR ARCH CULVERT. H = DIAMETER OF CIRCULAR CULVERT OR RISE/HEIGHT FOR BOX, ELLIPTICAL OR ARCH CULVERT.

✖ USE TYPICAL SECTION SHOWN ON PLANS FOR SIDE SLOPE, BOTTOM WIDTH AND DEPTH OF CHANNEL OR MATCH EXISTING DITCH OR NATURAL GROUND.

OUTLET PROTECTION MINUMUM LENGTH (L)	
TYPE A INSTALLATION	3H
TYPE B INSTALLATION	5H

SPECIFICATION REFERENCE
204 245 303 414

CULVERT OUTLET PROTECTION

REV 8/07

114.01

U.S. DEPARTMENT OF TRANSPORTATION
FEDERAL HIGHWAY ADMINISTRATION
EASTERN FEDERAL LANDS HIGHWAY DIVISION

DETAIL

STONE FOR EROSION CONTROL

DETAIL APPROVED FOR USE --/----

REVISED:

DETAIL
E251-B

6/16/2008 9:31:15 AM C:\PWworking\PITT\dms81089\Detail_EC-1.dgn

REG	STATE	PROJECT	SHEET NO.
-	VA	VA-A-AD-4B(1)	S11

EC-4

TYPICAL DETAIL FOR ROCK CHECK DAM TYPE I

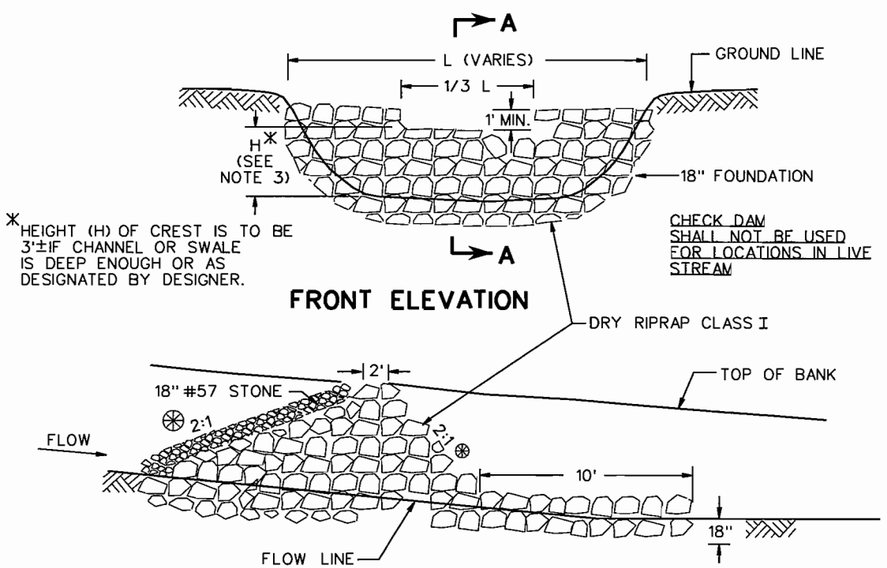

SECTION A-A

TYPICAL DETAIL FOR ROCK CHECK DAM TYPE II

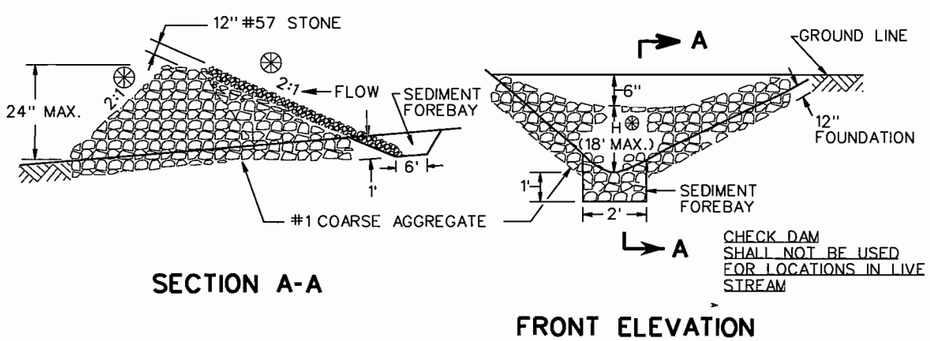

SECTION A-A

FRONT ELEVATION

SUGGESTED ROCK CHECK DAM SPACING

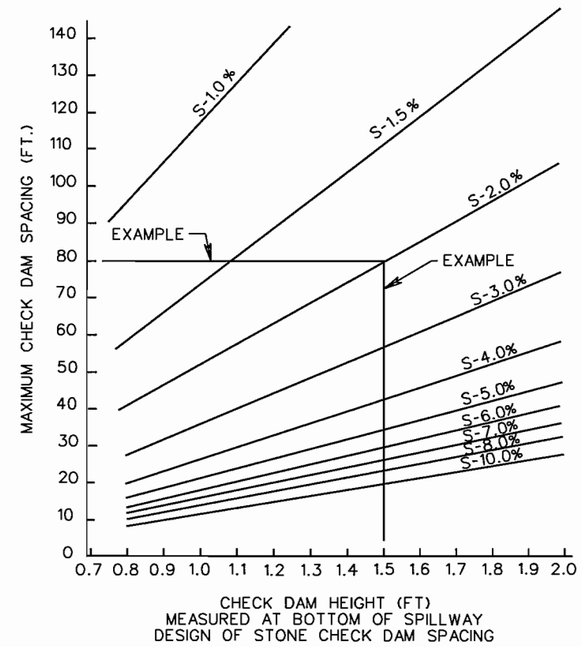

EXAMPLE :

HEIGHT OF STRUCTURE 1.5'
GRADE 2%
EXTEND PERPENDICULAR FROM 1.5' HEIGHT TO INTERSECT 2% GRADE
EXTEND 90° TO THE LEFT TO DETERMINE SPACING (78'±)

NOTES:

1. ROCK CHECK DAMS THAT ARE DESIGNATED ON THE PLANS AS A STORMWATER MANAGEMENT (SWM) ITEM ARE TO BE LEFT IN PLACE AS A PERMANENT INSTALLATION.
2. WHERE DRAINAGE AREAS EXCEED 1 ACRE OR DITCH GRADE EXCEEDS 3%, A TEMPORARY SEDIMENT FOREBAY SHALL BE INSTALLED WITH MINIMUM DIMENSIONS OF 12" DEPTH, 2' WIDTH AND 6' LENGTH.
3. ⊛ IF CHECK DAMS IS LOCATED INSIDE CLEAR ZONE AND ADJACENT TO A TRAVELWAY, SLOPE FACING ON COMING TRAFFIC IS TO BE 6:1 AND MAXIMUM H IS TO BE 12".
4. ALTERNATIVE MATERIALS LIST MAY BE SUBSTITUTED AS APPROVED BY THE CO.

SPECIFICATION REFERENCE
107 303

ROCK CHECK DAMS TYPE I & II

114.05

U.S. DEPARTMENT OF TRANSPORTATION
FEDERAL HIGHWAY ADMINISTRATION
EASTERN FEDERAL LANDS HIGHWAY DIVISION

DETAIL

STONE FOR EROSION CONTROL

DETAIL APPROVED FOR USE --/----
REVISED:

DETAIL
E251-C

6/16/2008 9:32:19 AM C:\PWworking\PITT\dms8108\Detail_EC-4.dgn

REG	STATE	PROJECT	SHEET NO.
-	VA	VA-A-AD-48(1)	S12

EW-1,1A

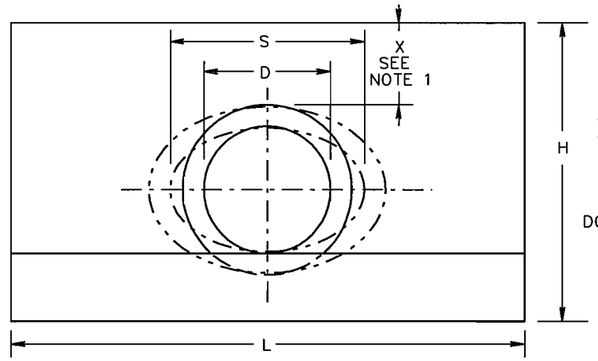

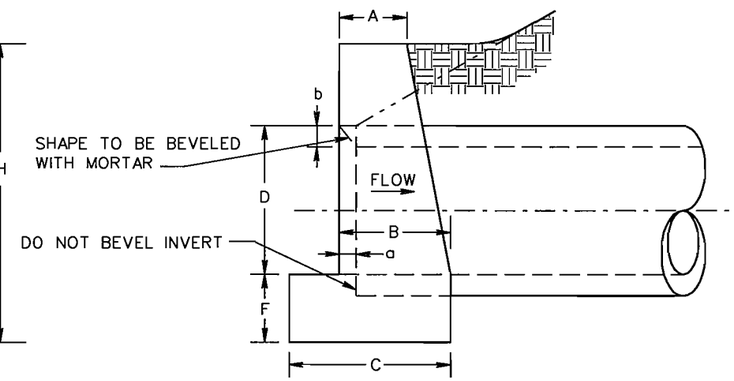

NOTES:

1. "H" MAY BE REDUCED UNTIL "X" REACHES A MINIMUM OF 4" WHERE HEADWALL WOULD PROTRUDE ABOVE SHOULDER LINE. IN NO CASE SHALL TOP OF HEADWALL PROJECT ABOVE FILL SLOPE, DITCH SLOPE, OR SHOULDER.
2. THIS ITEM MAY BE PRECAST OR CAST IN PLACE.
3. ALL CAST IN PLACE CONCRETE TO CONFORM WITH SECTION 601 FOR PRECAST SEE SHEET 101.02.
4. THIS STANDARD TO BE USED WITH STRAIGHT CROSSINGS AND ALL SKEWS (0° TO 45°).
5. HEADWALL TO BE BEVELED IN ALL AREAS EXCEPT WHERE A CONFLICT WITH INVERT OR WINGWALLS OCCUR.
6. BEVEL EDGE IS REQUIRED ON THE HEADWALL AT THE INLET END OF THE CULVERT (WHERE THE FLOW ENTERS THE CULVERT).
7. HEADWALL AT THE OUTLET END OF THE CULVERT MAY BE EITHER SQUARE EDGE OR BEVEL EDGE.
8. ON SHALLOW FILLS, WHERE HEADWALLS ARE 1' OR LESS BELOW SHOULDER LINE, THE TOP OF THE HEADWALL SHALL BE CONSTRUCTED PARALLEL TO THE GRADE OF THE ROAD.
9. 3/4" CHAMFER MAY BE PROVIDED ON ALL EDGES AT MANUFACTURER'S OPTION.

EW-1

HEADWALL FOR CIRCULAR PIPE

	DIAMETER OF PIPE CULVERT					
	12"	15"	18"	21" OR 24"	27" OR 30"	33" OR 36"
A	0'-6"	0'-8"	0'-9"	0'-11"	1'-0"	1'-0"
B	0'-11"	1'-1"	1'-3"	1'-6"	1'-9"	2'-0"
C	1'-4"	1'-7"	1'-9"	2'-2"	2'-6"	2'-9"
D	1'-0"	1'-3"	1'-6"	2'-0"	2'-6"	3'-0"
F	0'-6"	0'-8"	0'-8"	0'-9"	0'-9"	0'-9"
H	2'-3"	2'-11"	3'-2"	3'-9"	4'-3"	4'-9"
L	4'-0"	5'-0"	6'-0"	8'-0"	10'-0"	12'-0"
a	0'-1 1/4"	0'-1 3/4"	0'-2"	0'-2 1/2"	0'-3 1/4"	0'-3 3/4"
b	0'-1"	0'-1 1/4"	0'-1 1/2"	0'-2"	0'-2 1/2"	0'-3"
CUBIC YARDS OF CONCRETE						
CONC. PIPE	0.241	0.492	0.697	1.319	2.067	2.947
C.M. PIPE	0.257	0.521	0.739	1.398	2.198	3.145

EW-1A

HEADWALL FOR ELLIPTICAL PIPE

	SIZE OF ELLIPTICAL PIPE CULVERT (SPAN x RISE)							
	23"x14"	30"x19"	34"x22"	38"x24"	42"x27"	45"x29"	49"x32"	53"x34"
A	0'-8"	0'-9"	0'-10"	0'-11"	0'-11"	1'-0"	1'-0"	1'-0"
B	1'-2"	1'-5"	1'-6"	1'-8"	1'-9"	1'-10"	1'-11"	1'-11"
C	1'-8"	1'-11"	2'-1"	2'-4"	2'-5"	2'-7"	2'-8"	2'-9"
D	1'-2"	1'-7"	1'-10"	2'-0"	2'-3"	2'-5"	2'-8"	2'-10"
F	0'-8"	0'-8"	0'-9"	0'-9"	0'-9"	0'-9"	0'-9"	0'-9"
H	2'-10"	3'-3"	3'-7"	3'-9"	4'-0"	4'-2"	4'-5"	4'-7"
L	5'-5"	7'-2"	8'-6"	9'-2"	10'-2"	10'-11"	12'-1"	12'-11"
S	1'-11"	2'-6"	2'-10"	3'-2"	3'-6"	3'-9"	4'-1"	4'-5"
a	0'-2 1/2"	0'-3 1/4"	0'-3 1/2"	0'-4"	0'-4 1/2"	0'-4 3/4"	0'-5"	0'-5 1/2"
b	0'-2"	0'-2 1/2"	0'-2 3/4"	0'-3"	0'-3 1/2"	0'-3 3/4"	0'-4"	0'-4 1/2"
CUBIC YARDS OF CONCRETE								
CONC.PIPE	0.502	0.855	1.236	1.500	1.811	2.101	2.512	2.801

SPECIFICATION REFERENCE
105 302

STANDARD HEADWALL FOR PIPE CULVERTS
12"-36" CIRCULAR AND 23"x14"-53"x34" ELLIPTICAL PIPES

101.01

U.S. DEPARTMENT OF TRANSPORTATION
FEDERAL HIGHWAY ADMINISTRATION
EASTERN FEDERAL LANDS HIGHWAY DIVISION

DETAIL

STANDARD HEADWALL

DETAIL APPROVED FOR USE --/----

DETAIL
E601-A

6/16/2008 9:33:10 AM C:\PWworking\PITT\dms8108\Detail_EW-1.dgn

REG	STATE	PROJECT	SHEET NO.
-	VA	VA-A-AD-48(1)	S13

EW-2,2A

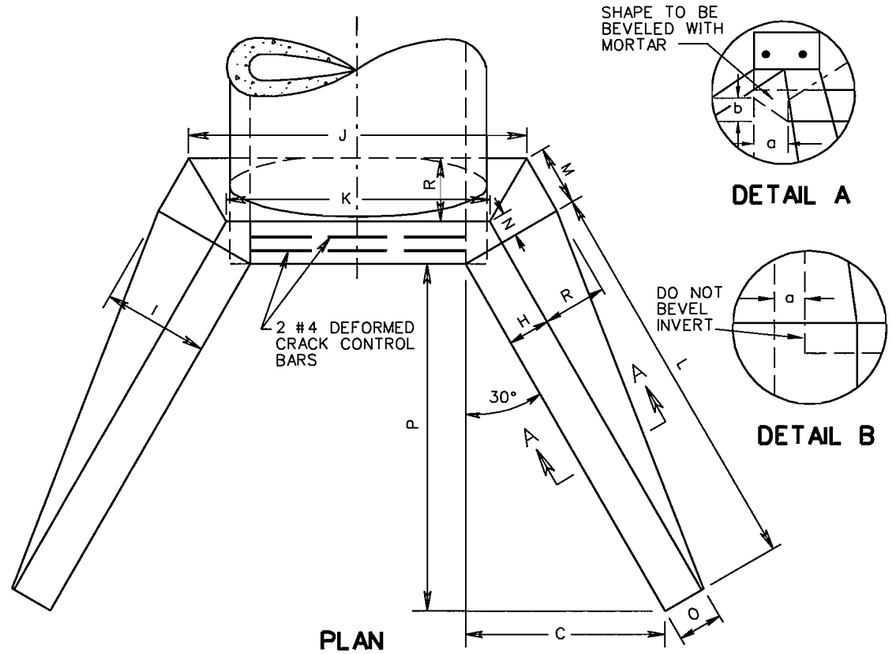

NOTES:

1. FOR TABLE OF DIMENSIONS AND VOLUMES FOR CIRCULAR PIPES (STANDARD HEADWALL II) SEE SHEET 2 OF 3.
2. FOR TABLE OF DIMENSIONS AND VOLUMES FOR ELLIPTICAL PIPES (STANDARD HEADWALL II) SEE SHEET 3 OF 3.
3. THIS ITEM MAY BE PRECAST OR CAST IN PLACE.
4. ON SHALLOW FILLS, WHERE ENDWALLS ARE 1' OR LESS BELOW SHOULDER LINE, THE TOP OF THE ENDWALL SHALL BE CONSTRUCTED PARALLEL TO THE GRADE OF ROAD.
5. ALL CAST IN PLACE CONCRETE TO CONFORM TO SECTION 601 FOR PRECAST SEE SHEETS 101.06 AND 101.07.
6. IN NO CASE SHALL TOP OF HEADWALL PROJECT ABOVE FILL SLOPE, DITCH SLOPE, OR SHOULDER.
7. THIS STANDARD TO BE USED WITH STRAIGHT CROSSINGS AND SKEW ANGLES TO 15°.
8. COST OF BARS FOR CRACK CONTROL TO BE INCLUDED IN PRICE PER BID PER CUBIC YARD CONCRETE.
9. HEADWALL TO BE BEVELED IN ALL AREAS EXCEPT WHERE A CONFLICT WITH INVERT AND WINGWALLS OCCUR.
10. BEVEL EDGE IS REQUIRED ON THE HEADWALL AT THE INLET END OF THE CULVERT (WHERE THE FLOW ENTERS THE CULVERT). HEADWALL AT THE OUTLET END OF THE CULVERT MAY BE EITHER SQUARE EDGE OR BEVEL EDGE.
11. ¾" CHAMFER MAY BE PROVIDED ON ALL EDGES AT MANUFACTURER'S OPTION.

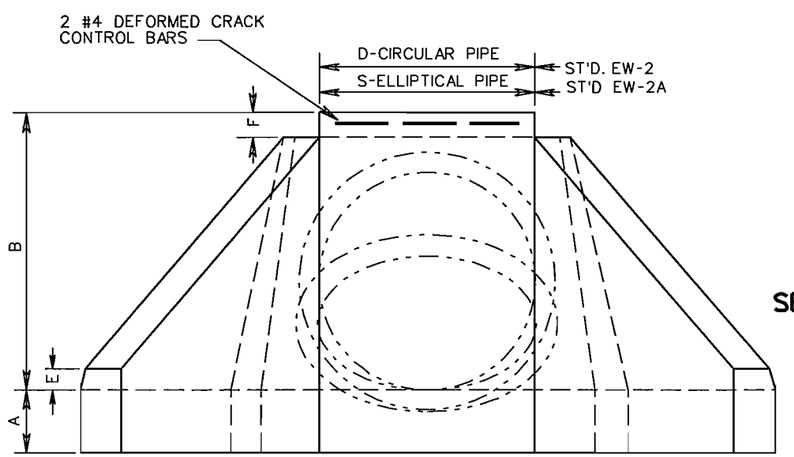

END ELEVATION

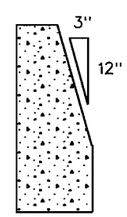

SECTION A-A

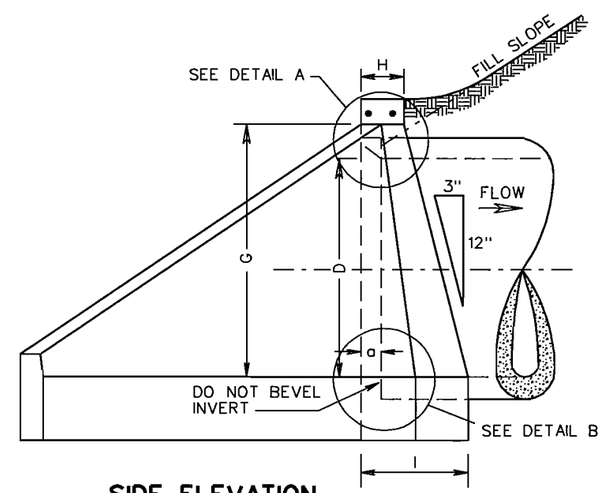

SIDE ELEVATION

SHEET 1 OF 3

SPECIFICATION REFERENCE
105 302

STANDARD HEADWALL FOR PIPE CULVERTS
42"-96" CIRCULAR AND 60"x38"-106"x68" ELLIPTICAL PIPES

101.03

SHEET 1 OF 3

U.S. DEPARTMENT OF TRANSPORTATION
FEDERAL HIGHWAY ADMINISTRATION
EASTERN FEDERAL LANDS HIGHWAY DIVISION

DETAIL

STANDARD HEADWALL

DETAIL APPROVED FOR USE --/----

REVISED:

DETAIL
E601-B

6/16/2008 9:34:15 AM C:\PWworking\PITT\dms81081\Detail_EW-2.dgn

REG	STATE	PROJECT	SHEET NO.
-	VA	VA-A-AD-48(1)	S14

EW-2

TABLE OF DIMENSIONS AND CONCRETE VOLUMES PER HEADWALL FOR 42" - 96" CIRCULAR PIPE CULVERTS

DIAMETER OF PIPE CULVERTS

	DIMENSION	42"	48"	54"	60"	66"	72"	78"	84"	90"	96"	DIMENSION
FOR 1½:1 FILL SLOPE	A	1'-6"	1'-6"	1'-6"	1'-6"	1'-6"	1'-6"	1'-6"	1'-6"	1'-6"	1'-6"	A
	B	4'-9½"	5'-4"	5'-10½"	6'-5"	6'-11½"	7'-6"	8-0½"	8'-7"	9'-2¼"	9'-9¾"	B
	C	3'-3¾"	3'-9"	4'-2¼"	4'-7"	5'-0⅝"	5'-5¾"	5'-11"	6'-4¼"	6'-9⅜"	7'-2⅝"	C
	D	3'-6"	4'-0"	4'-6"	5'-0"	5'-6"	6'-0"	6'-6"	7'-0"	7'-6"	8'-0"	D
	E	0'-6"	0'-6"	0'-6"	0'-6"	0'-6"	0'-6"	0'-6"	0'-6"	0'-6"	0'-6"	E
	F	0'-5½"	0'-6"	0'-6½"	0'-7"	0'-7½"	0'-8"	0'-8½"	0'-9"	0'-9½"	0'-10"	F
	G	4'-4"	4'-10"	5'-4"	5'-10"	6'-4"	6'-10"	7'-4"	7'-10"	8'-4"	8'-10"	G
	H	0'-10"	0'-10"	0'-11"	1'-0"	1'-1"	1'-2"	1'-3"	1'-4"	1'-5"	1'-6"	H
	I	1'-11"	2'-0½"	2'-3"	2'-5½"	2'-8"	2'-10½"	3'-1"	3'-3½"	3'-6"	3'-8½"	I
	J	5'-8½"	6'-4¼"	7'-1¼"	7'-10"	8'-7"	9'-4"	10'-0¾"	10'-9⅝"	11'-7"	12'-4⅛"	J
	K	4'-5½"	4'-11½"	5'-6¾"	6'-1⅞"	6'-9"	7'-4⅛"	7'-11¼"	8'-6½"	9'-2"	9'-9⅛"	K
	L	6'-7⅝"	7'-6"	8'-4½"	9'-2⅞"	10'-1¼"	10'-11⅝"	11'-10"	12'-8⅜"	13'-6⅞"	14'-5¼"	L
	M	1'-1¼"	1'-2⅛"	1'-3⅝"	1'-5"	1'-6½"	1'-8"	1'-9⅜"	1'-10¾"	2'-0⅜"	2'-2"	M
	N	0'-5¾"	0'-5¾"	0'-6¾"	0'-6⅞"	0'-7½"	0'-8⅛"	0'-8⅝"	0'-9¼"	0'-10"	0'-10½"	N
	O	0'-11½"	0'-11½"	1'-0½"	1'-1½"	1'-2½"	1'-3½"	1'-4½"	1'-5½"	1'-6½"	1'-7½"	O
	P	5'-9"	6'-6"	7'-3"	8'-0"	8'-9"	9'-6"	10'-3"	11'-0"	11'-9"	12'-6"	P
	R	1'-1"	1'-2½"	1'-4"	1'-5½"	1'-7"	1'-8½"	1'-10"	1'-11½"	2'-1"	2'-2½"	R
CUBIC YARDS CONCRETE	CONC. PIPE	3.558	4.373	5.635	7.089	8.776	10.702	12.861	15.303	18.195	21.285	CONC. PIPE
	C.M. PIPE	3.791	4.680	6.054	7.642	9.490	11.605	13.984	16.678	19.724	23.107	C.M. PIPE
FOR 2:1 FILL SLOPE	C	4'-4"	4'-10⅞"	5'-5¾"	6'-0¾"	6'-7⅝"	7'-2⅝"	7'-9½"	8'-4½"	8'-11⅜"	9'-6¼"	C
	F	0'-6½"	0'-7"	0'-7½"	0'-8"	0'-8½"	0'-9"	0'-9½"	0'-10"	0'-10½"	0'-11"	F
	G	4'-3"	4'-9"	5'-3"	5'-9"	6'-3"	6'-9"	7'-3"	7'-9"	8'-3"	8'-9"	G
	I	1'-10¾"	2'-0¼"	2'-2¾"	2'-5¼"	2'-7¾"	2'-10¼"	3'-0¾"	3'-3¼"	3'-5¾"	3'-8¼"	I
	J	5'-8¼"	6'-4"	7'-1"	7'-9¾"	8'-6¾"	9'-3½"	10'-0½"	10'-9⅛"	11'-6⅜"	12'-3½"	J
	L	8'-8"	9'-9¾"	10'-11⅝"	12'-1½"	13'-3⅜"	14'-5¼"	15'-7"	16'-9"	17'-10¾"	19'-0⅝"	L
	M	1'-1⅛"	1'-2"	1'-3½"	1'-4⅞"	1'-6⅜"	1'-7¾"	1'-9¼"	1'-10⅝"	2'-0¼"	2'-1⅞"	M
	P	7'-6"	8'-6"	9'-6"	10'-6"	11'-6"	12'-6"	13'-6"	14'-6"	15'-6"	16'-6"	P
	R	1'-0¾"	1'-2¼"	1'-3¾"	1'-5¼"	1'-6¾"	1'-8¼"	1'-9¾"	1'-11¼"	2'-0¾"	2'-2¼"	R
CUBIC YARDS CONCRETE	CONC. PIPE	4.238	5.230	6.761	8.538	10.602	12.958	15.612	18.623	22.104	25.898	CONC. PIPE
	C.M. PIPE	4.469	5.536	7.177	9.088	11.312	13.856	16.730	19.993	23.618	27.704	C.M. PIPE
FOR 1½:1 AND 2:1 FILL SLOPES	a	0'-4½"	0'-5"	0'-5¾"	0'-6¼"	0'-7"	0'-7½"	0'-8¼"	0'-8¾"	0'-9½"	0'-10"	a
	b	0'-3½"	0'-4"	0'-4½"	0'-5"	0'-5½"	0'-6"	0'-6½"	0'-7"	0'-7½"	0'-8"	b

FOR ALL DIMENSIONS NOT SHOWN SEE VALUES LISTED ABOVE FOR 1½:1 FILL SLOPE

SHEET 2 OF 3

STANDARD HEADWALL FOR PIPE CULVERTS 42"-96" CIRCULAR PIPES

101.04

SPECIFICATION REFERENCE

105
302

SHEET 2 OF 3

U.S. DEPARTMENT OF TRANSPORTATION
FEDERAL HIGHWAY ADMINISTRATION
EASTERN FEDERAL LANDS HIGHWAY DIVISION

DETAIL

STANDARD HEADWALL

DETAIL APPROVED FOR USE --/----

REVISED:

DETAIL
E601-B

6/16/2008 9:39:01 AM C:\PWworking\PITT\dms81089\Detail_EW-2-2.dgn

REG	STATE	PROJECT	SHEET NO.
-	VA	VA-A-AD-48(1)	S15

EW-2A

TABLE OF DIMENSIONS AND CONCRETE VOLUMES PER HEADWALL FOR ELLIPTICAL PIPE CULVERTS

SIZE OF ELLIPTICAL PIPE CULVERTS (SPAN X RISE)

	DIMENSION	60 x 38	68 x 43	76 x 48	83 x 53	91 x 58	98 x 63	106 x 68	DIMENSION
FOR 1½:1 FILL SLOPE	A	1'-6"	1'-6"	1'-6"	1'-6"	1'-6"	1'-6"	1'-6"	A
	B	4'-9½"	4'-9½"	5'-4"	5'-10½"	6'-5"	6'-11½"	7'-6"	B
	C	3'-3¾"	3'-3¾"	3'-9"	4'-2¼"	4'-7½"	5'-0⅝"	5'-5¾"	C
	D	3'-2"	3'-7"	4'-0"	4'-5"	4'-10"	5'-8"	5'-8"	D
	E	0'-6"	0'-6"	0'-6"	0'-6"	0'-6"	0'-6"	0'-6"	E
	F	0'-5½"	0'-5½"	0'-6"	0'-6½"	0'-7"	0'-7½"	0'-8"	F
	G	4'-4"	4'-4"	4'-10"	5'-4"	5'-10"	6'-4"	6'-10"	G
	H	0'-10"	0'-10"	0'-10"	0'-11"	1'-0"	1'-1"	1'-2"	H
	I	1'-11"	1'-11"	2'-0½"	2'-3"	2'-5½"	2'-8"	2'-10½"	I
	J	7'-2½"	7'-10½"	8'-8¼"	9'-6¼"	10'-5"	11'-3"	12'-2"	J
	K	5'-11½"	6'-7½"	7'-3½"	7'-11¾"	8'-8⅞"	9'-5"	10'-2⅛"	K
	L	6'-7⅝"	6'-7⅝"	7'-6"	8'-4½"	9'-2⅞"	10'-1¼"	10'-11⅝"	L
	M	1'-1¼"	1'-1¼"	1'-2⅛"	1'-3⅝"	1'-5"	1'-6½"	1'-8"	M
	N	0'-5¾"	0'-5¾"	0'-5¾"	0'-6⅜"	0'-6⅞"	0'-7½"	0'-8½"	N
	O	0'-11½"	0'-11½"	0'-11½"	1'-0½"	1'-1½"	1'-2½"	1'-3½"	O
	P	5'-9"	5'-9"	6'-6"	7'-3"	8'-0"	8'-9"	9'-6"	P
	R	1'-1"	1'-1"	1'-2½"	1'-4"	1'-5½"	1'-7"	1'-8½"	R
	S	5'-0"	5'-8"	6'-4"	6'-11"	7'-7"	8'-2"	8'-10"	S
CUBIC YARDS CONCRETE	CONCRETE PIPE	3.793	3.747	4.601	5.913	7.433	9.191	11.207	CONCRETE PIPE
FOR 2:1 FILL SLOPE	C	4'-4"	4'-4"	4'-10⅞"	5'-5¾"	6'-0¾"	6'-7⅝"	7'-2⅝"	C
	F	0'-6½"	0'-6½"	0'-7"	0'-7½"	0'-8"	0'-8½"	0'-9"	F
	G	4'-3"	4'-3"	4'-9"	5'-3"	5'-9"	6'-3"	6'-9"	G
	I	1'-10¾"	1'-10¾"	2'-0¼"	2'-2¾"	2'-5¼"	2'-7¾"	2'-10¼"	I
	J	7'-2½"	7'-10½"	8'-8¼"	9'-6¼"	10'-5"	11'-3"	12'-2"	J
	L	8'-8"	8'-8"	9'-9¾"	10'-11⅝"	12'-1½"	13'-3⅜"	14'-5¼"	L
	M	1'-1⅛"	1'-1⅛"	1'-2"	1'-3½"	1'-4⅞"	1'-6⅜"	1'-7¾"	M
	P	7'-6"	7'-6"	8'-6"	9'-6"	10'-6"	11'-6"	12'-6"	P
	R	1'-0¾"	1'-0¾"	1'-2¼"	1'-3¾"	1'-5¼"	1'-6¾"	1'-8¼"	R
CUBIC YARDS CONCRETE	CONCRETE PIPE	4.469	4.423	5.453	7.034	8.876	11.010	13.457	CONCRETE PIPE
FOR 1½:1 AND 2:1 FILL SLOPES	a	0'-6¼"	0'-7"	0'-8"	0'-8¾"	0'-9½"	0'-10¼"	0'-11"	a
	b	0'-5"	0'-5¾"	0'-6¼"	0'-7"	0'-7½"	0'-8"	0'-8¾"	b

FOR ALL DIMENSIONS NOT SHOWN SEE VALUES LISTED ABOVE FOR 1½:1 FILL SLOPES

SHEET 3 OF 3

SPECIFICATION REFERENCE
105 302

STANDARD HEADWALL FOR PIPE CULVERTS 60"x38"-106"x68" ELLIPTICAL PIPES

101.05

SHEET 3 OF 3

U.S. DEPARTMENT OF TRANSPORTATION
FEDERAL HIGHWAY ADMINISTRATION
EASTERN FEDERAL LANDS HIGHWAY DIVISION

DETAIL

STANDARD HEADWALL

DETAIL APPROVED FOR USE --/----

REVISED:

DETAIL E601-B

6/16/2008 9:39:45 AM C:\PWworking\PITT\dms81081\Detail_EW-2-3.dgn

REG	STATE	PROJECT	SHEET NO.
-	VA	VA-A-AD-48(1)	S16

EW-12

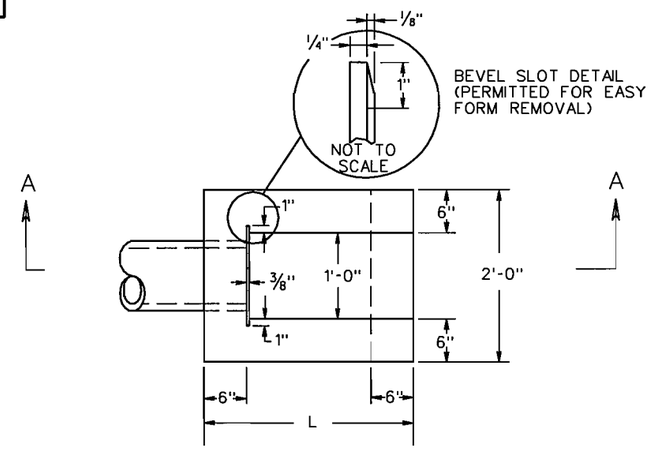

PLAN

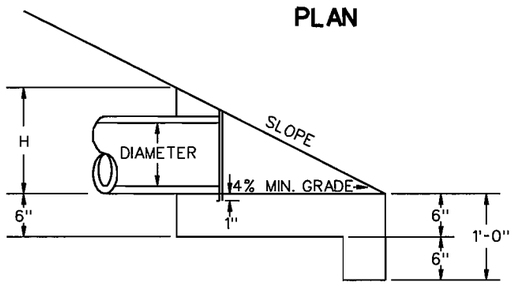

SECTION A-A

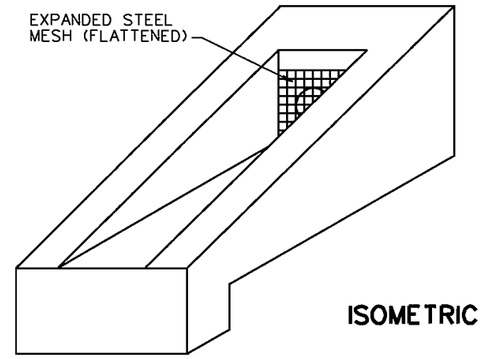

ISOMETRIC

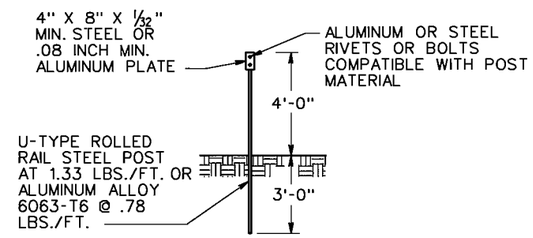

UNDERDRAIN OUTLET
MARKER DETAIL

PIPE I.D.	SLOPE	DIMENSIONS		CLASS A(AE)(f'c=300psi) CONCRETE CUBIC YARDS
		L	H	
4"	2:1	2'-5 1/2"	1'-2 3/4"	0.17
4"	4:1	4'-5"	1'-1 1/4"	0.28
6"	2:1	2'-10 1/2"	1'-5 1/4"	0.21
6"	4:1	5'-3"	1'-3 3/4"	0.35

NOTES:

1. TYPICAL HEADWALL TO BE PLACED AT THE ENDS OF ALL UNDERDRAIN OUTLETS, BARRING LOCATIONS WHERE UNDERDRAIN IS TIED INTO OTHER DRAINAGE STRUCTURES. HEADWALL TO BE INSTALLED PERPENDICULAR TO ROADWAY AND FLUSH WITH THE SLOPE.
2. OUTLET PIPES SHALL BE RIGID NONPERFORATED, SMOOTH-BORE PIPE, MEETING THE REQUIREMENTS OF 70 PSI TESTED ACCORDING TO ASTM 2412.
3. EXPANDED STEEL MESH (FLATTENED) SHALL HAVE OPENINGS OF APPROX. 1/2" X 1" AND WEIGH APPROX. 0.82 LBS. PER SQ. FT. MESH SHALL BE GALVANIZED IN ACCORDANCE WITH ASTM A-123. THE MESH SHALL EXTEND A MINIMUM OF 1" ABOVE THE O.D. OF THE PIPE, AND IS A BARRIER FOR RODENTS, ETC. THE SLOT FOR THE STEEL MESH IS TO BE CONSTRUCTED SO THAT THE MESH CAN BE REMOVED FOR CLEANOUT PURPOSES.
4. THIS ITEM MAY BE PRECAST OR CAST IN PLACE.
5. STEEL POSTS AND PLATES TO BE PAINTED OR GALVANIZED IN ACCORDANCE WITH THE ROAD AND BRIDGE SPECIFICATIONS. IF PAINTED THE FINAL COAT SHALL BE NO. 13 ALUMINUM PAINT OR NO. 11 WHITE PAINT.
6. MARKER TO BE PLACED AT ALL UNDERDRAIN HEADWALL INSTALLATIONS.
7. MARKER WILL BE PAID INCLUDED IN PRICE OF UNDERDRAIN.

REV. 7/04

STANDARD HEADWALL FOR PIPE UNDERDRAIN

101.32

SPECIFICATION REFERENCE
105
233
302
501

U.S. DEPARTMENT OF TRANSPORTATION
FEDERAL HIGHWAY ADMINISTRATION
EASTERN FEDERAL LANDS HIGHWAY DIVISION

DETAIL

STANDARD UNDERDRAIN HEADWALL
(VDOT STD. EW-12)

DETAIL APPROVED FOR USE --/----

REVISED:

DETAIL
E601-C

6/16/2008 9:40:31 AM C:\PWworking\PITT\dms8108\Detail_EW-12.dgn

REG	STATE	PROJECT	SHEET NO.
-	VA	VA-A-AD-48(1)	S17

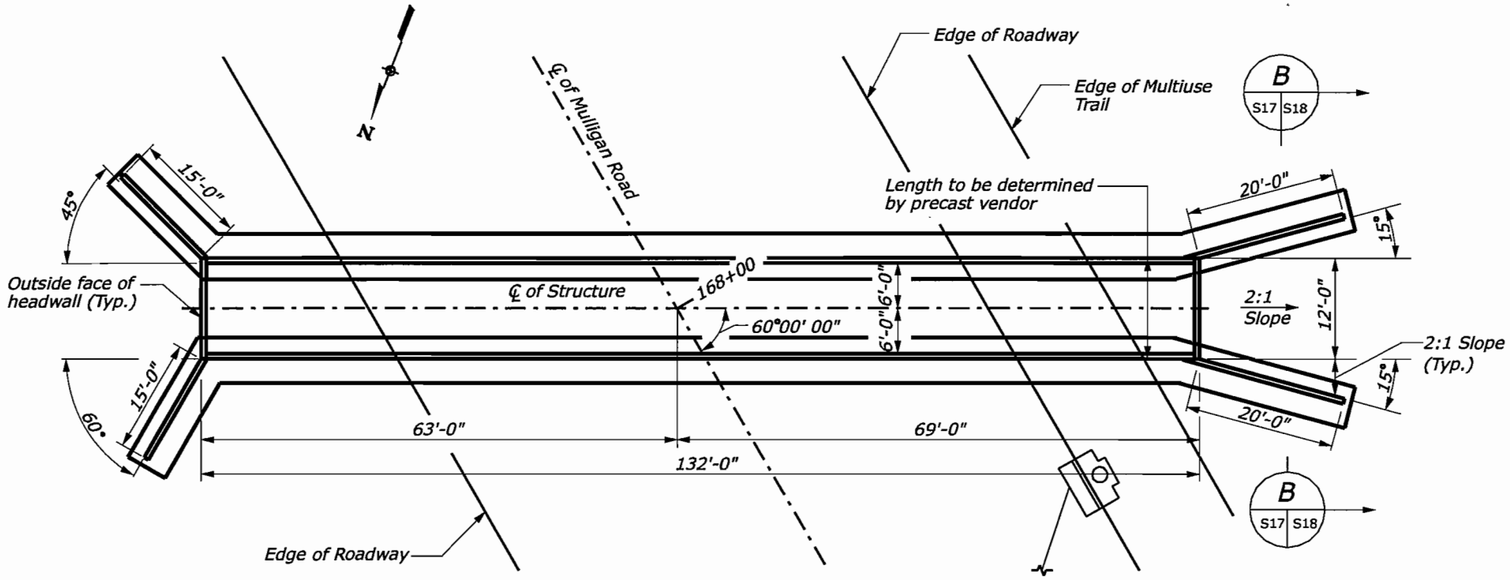

PLAN

Notes:

1. Width: 132'-0" out to out of headwalls.

2. Span layout: 12'-0" clear span concrete 3 sided wildlife crossing.

3. Capacity: HL93

Specifications:

Construction: Standard Specifications for Construction of Roads and Bridges on Federal Highway Projects, FP-03.

Design: AASHTO LRFD Specfications for Highway Bridges, Fourth Edition.

These plans are incomplete unless accompanied by SCR (Special Contract Requirements) included in contract documents.

All concrete shall be class A(AE), f'c = 4000 PSI or as recommended by manufacturer.

Deformed reinforcing bars shall conform to ASTM A615, Grade 60. All reinforcement shall be epoxy coated.

For foundation requirements, see technical specifications and geotechnical report.

Concrete wildlife crossing to be bottomless.

For location of wildlife crossing, see sheet D4.

Wildlife crossing is paid lump sum which includes structure excavation, base aggregates and all the structural elements including footing & wingwall. All the misc. items shown here such as damproofing, grouts, porous backfill, underdrain, etc. and/or any other items as per manufacturers recommendation shall be included in lump sum bid price.

Finish bottom of wildlife crossing as shown in the drawings.

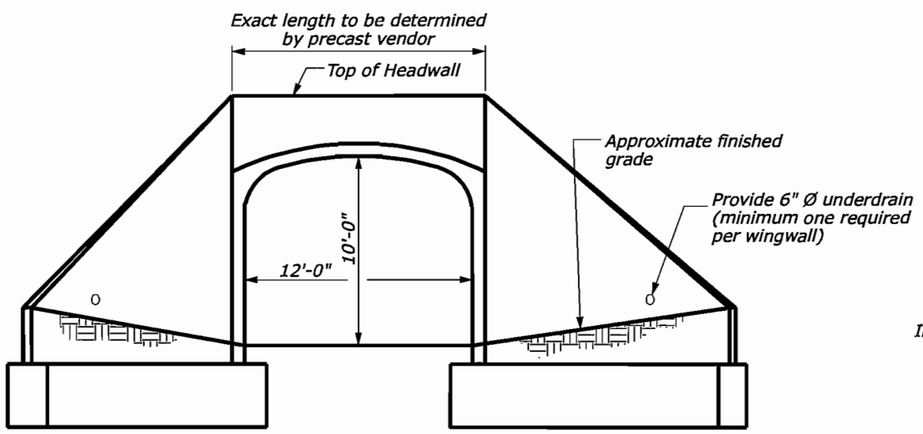

DEVELOPED ELEVATION - LOOKING WEST

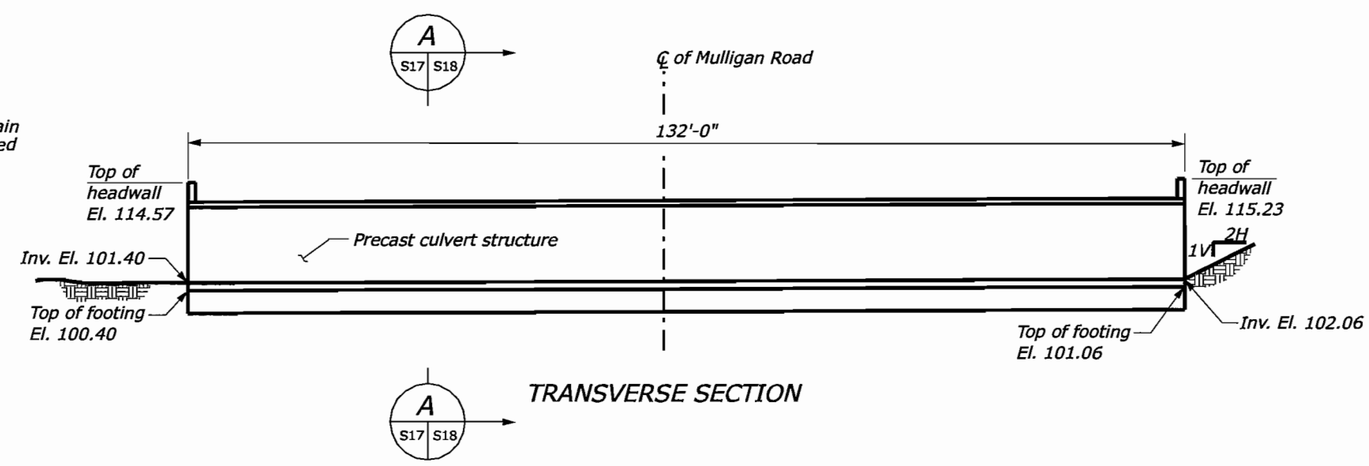

TRANSVERSE SECTION

U.S. DEPARTMENT OF TRANSPORTATION
FEDERAL HIGHWAY ADMINISTRATION
EASTERN FEDERAL LANDS HIGHWAY DIVISION
STERLING, VIRGINIA

Fort Belvoir - Mulligan Road

WILDLIFE CROSSING

Mulligan Road

E602-A

6/16/2008 10:05:27 AM C:\PWworking\PITT\dms60567\Wildlife Crossing.dgn

REG	STATE	PROJECT	SHEET NO.
-	VA	VA-A-AD-48(1)	S18

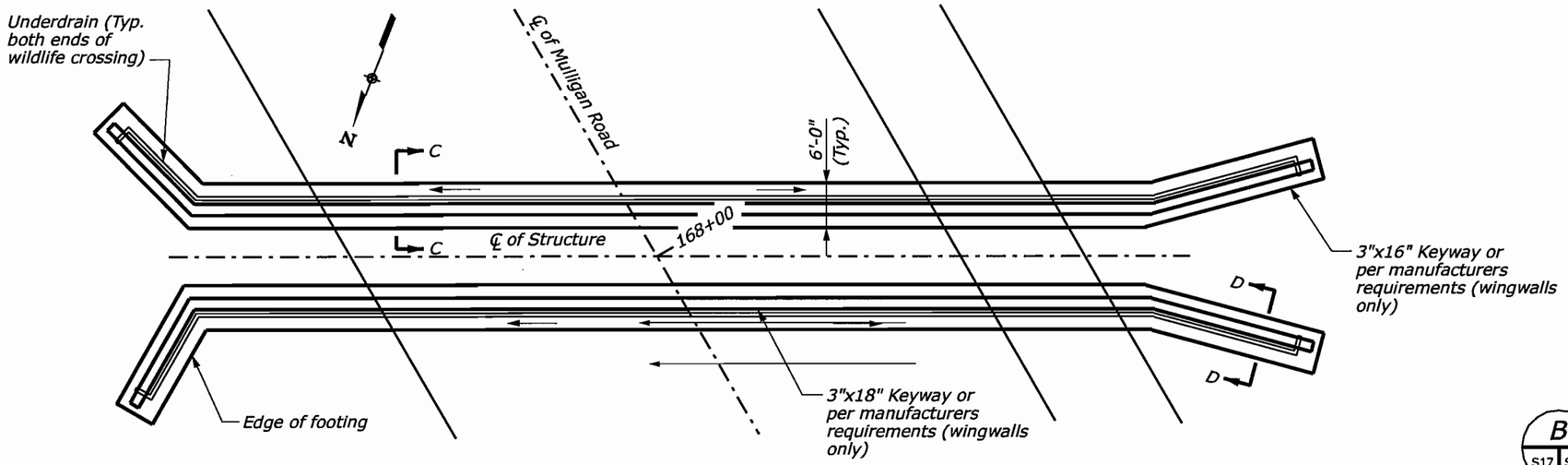

SUBSTRUCTURE PLAN

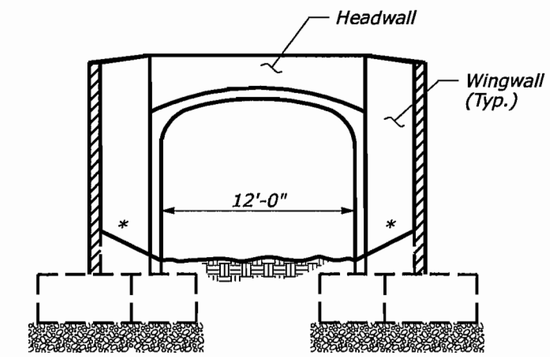

B
S17 S18

SECTION
Not to Scale

* 2H:1V

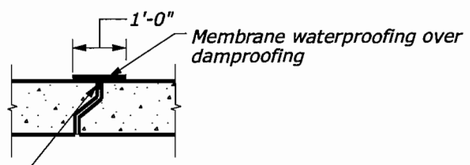

Joints between sections shall be sealed with a material from the approved list of preformed plastic or mastic gaskets. Damproofing shall fill area between gasket and waterproofing.

Note:
Membrane waterproofing shall conform to the requirements of Section 559 of the Specifications. Damproofing shall conform to the requirements of Section 558 of the Specifications.

TYPICAL PRECAST JOINT DETAIL
Not to scale

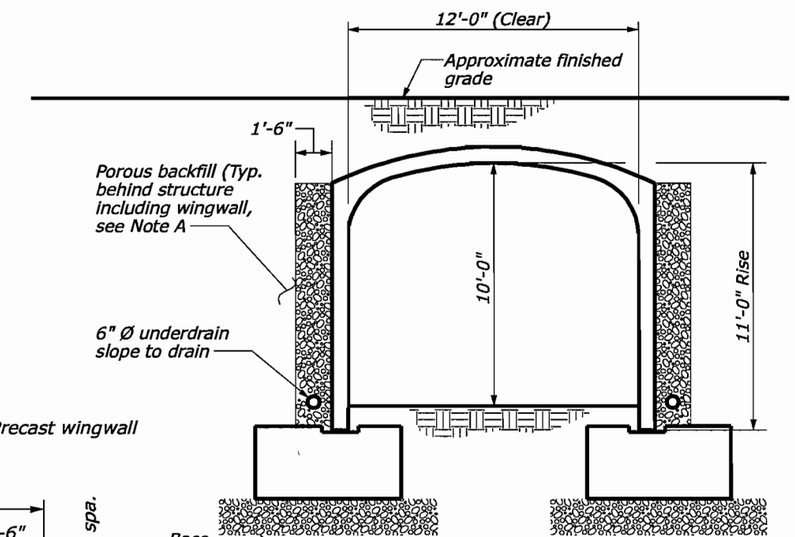

A
S17 S18

SECTION
Not to Scale

Note:

A. Backfill behind bridge structure and wingwalls shall be performed in accordance with precast bridge manufacturers requirements. However min. compaction per roadway is required. Provide base aggregate grading C above structure & below roadway subbase, min. 95% compaction is required.

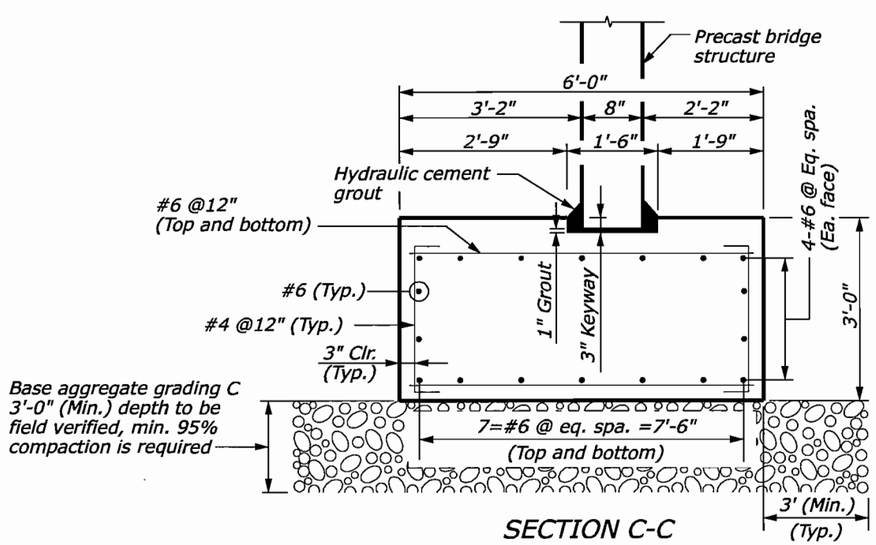

SECTION C-C
Not to scale

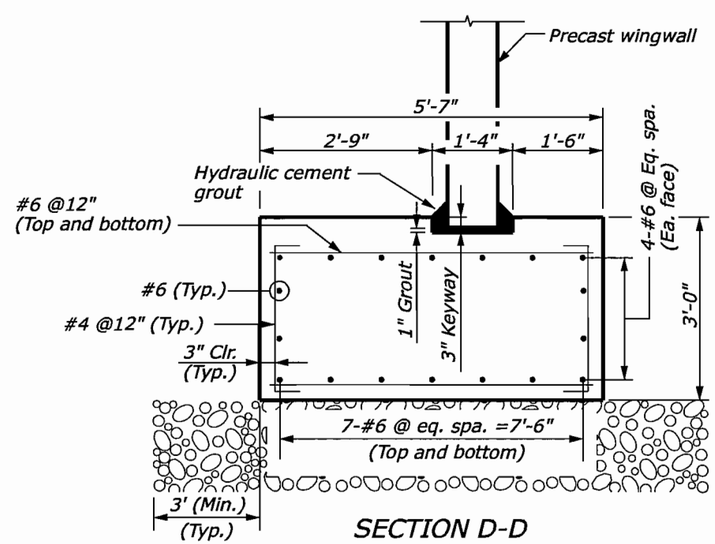

SECTION D-D
Not to scale

U.S. DEPARTMENT OF TRANSPORTATION
FEDERAL HIGHWAY ADMINISTRATION
EASTERN FEDERAL LANDS HIGHWAY DIVISION
STERLING, VIRGINIA

Fort Belvoir - Mulligan Road

WILDLIFE CROSSING DETAILS

Mulligan Road

E602-B

6/16/2008 10:06:18 AM C:\PWworking\PITT\dms50567\Wildlife Crossing Details.dgn

REG	STATE	PROJECT	SHEET NO.
-	VA	VA-A-AD-48(1)	S19

STRUCTURAL PLATE PIPE CULVERT

FILL HEIGHT AND METAL THICKNESS TABLE

STEEL

PIPE SIZE DIAMETER INCHES	MINIMUM COVER INCHES	6" x 2" CORRUGATIONS METAL THICKNESS (INCH/GAGE)/BOLTS PER CORRUGATION								
		0.111/12/2	0.140/10/2	0.170/8/2	0.188/7/2	0.218/5/2	0.249/3/2	0.280/1/2	0.280/1/3	0.280/1/4
		MAXIMUM FILL HEIGHT ABOVE TOP OF PIPE (FEET)								
60	12	46	68	90	100	100	100	100	100	100
66	12	42	62	81	93	100	100	100	100	100
72	12	38	57	75	86	100	100	100	100	100
78	12	35	52	69	79	95	100	100	100	100
84	12	33	49	64	73	88	100	100	100	100
90	12	31	45	60	68	82	97	100	100	100
96	12	29	43	56	64	77	91	100	100	100
102	18	27	40	52	60	73	86	94	100	100
108	18	25	38	50	57	69	81	88	100	100
114	18	24	36	47	54	65	77	84	100	100
120	18	23	34	45	51	62	73	80	100	100
126	18	22	32	42	49	59	69	76	95	100
132	18	21	31	40	46	56	66	72	91	97
138	18	20	29	39	44	54	63	69	87	93
144	18	19	28	37	43	51	61	66	83	89
150	24	18	27	36	41	49	58	64	80	86
156	24	17	26	34	39	47	56	61	76	82
162	24	17	25	33	38	46	54	59	73	79
168	24	16	24	32	36	44	52	57	71	76
174	24	16	23	31	35	42	50	55	68	74
180	24	15	22	30	34	41	48	53	66	71
186	24	15	22	29	33	40	47	51	64	69
192	24		21	28	32	38	45	50	62	67
198	30		20	27	31	37	44	48	60	65
204	30		20	26	30	36	43	47	58	63
210	30		19	25	29	35	41	45	56	61
216	30			25	28	34	40	44	54	59
222	30			24	27	33	39	43	53	58
228	30			23	27	32	38	42	51	56
234	30			23	26	31	37	41	50	55
240	30				25	31	36	40	49	53
246	36				25	30	35	39	48	52
252	36					29	34	38	46	51
258	36					28	34	37	45	49
264	36					28	33	36	44	48
270	36					27	32	35	43	47
276	36						31	34	42	46
282	36						31	34	41	45
288	42						30	33	40	44
294	42							32	40	43
300	42							32	39	42
306	42							31	38	41

ALUMINUM

PIPE SIZE DIAMETER INCHES	MINIMUM COVER INCHES	9" x 2½" CORRUGATIONS METAL THICKNESS (INCH/GAGE)/BOLTS PER CORRUGATION						
		0.100/12/4	0.125/11/4	0.150/9/4	0.175/7/4	0.200/6/4	0.225/4/4	0.250/2/4
		MAXIMUM FILL HEIGHT ABOVE TOP OF PIPE (FEET)						
60	15	31	45	60	70	81	92	100
66	15	28	41	54	64	74	84	94
72	18	25	37	50	58	67	77	86
78	18	23	35	46	54	62	71	79
84	18	22	32	42	50	58	66	73
90	21	20	30	40	47	54	61	68
96	21	19	28	37	44	50	57	64
102	24	18	26	35	41	47	54	60
108	24	17	25	33	39	45	51	57
114	27	16	23	31	37	42	48	54
120	27	15	22	30	35	40	46	51
126	30	14	21	28	33	38	44	49
132	30	14	20	27	32	37	42	47
138	33	13	19	26	30	35	40	44
144	33	12	18	25	29	33	38	43
150	33		18	24	28	32	36	41
156	33		17	23	27	31	35	39
162	33			22	26	30	34	38
168	33			21	25	29	33	36
174	33			20	24	28	31	35
180	33				23	27	30	34
186	33				22	26	29	33
192	36					25	28	32
198	36					24	28	31
204	36					23	27	30
210	36						26	29
216	36						25	28
222	36							27
228	36							27

NOTE:

1. Fabricate the bottom plates one (1) thickness heavier than the side plates but not heavier than 0.380 inch for steel or 0.250 inch for aluminum.
2. Fasten plates with galvanized steel ¾" bolts and nuts conforming to AASHTO M167.
3. When directed, camber pipe culverts upward from a chord through the inlet and outlet inverts an ordinate amount equal to 1% of the pipe length. Develop camber on a parabolic curve. If the midpoint elevation on the parabolic curve as designed exceeds the elevation of the inlet invert, reduce the amount of camber or increase the pipe culvert gradient.
4. Measure minimum cover from the top of the pipe culvert to the subgrade for flexible pavements, and to the top of the pavement for rigid pavements. Measure maximum fill height from the top of the pipe to the top of the pavement for both flexible and rigid pavement.

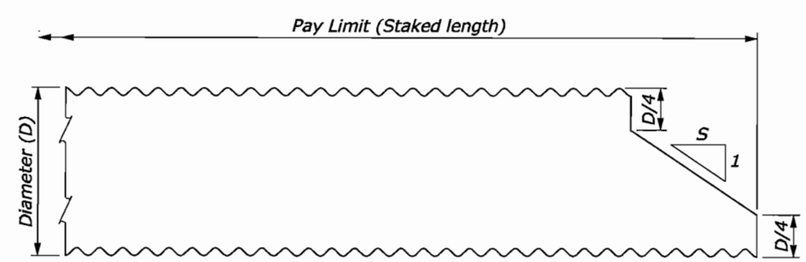

S 1 S = 1.5 for 1V:1.5H fill slopes
S = 2 for 1V:2H or flatter slopes

END TREATMENT DIAGRAM

NO SCALE

U.S. DEPARTMENT OF TRANSPORTATION
FEDERAL HIGHWAY ADMINISTRATION
FEDERAL LANDS HIGHWAY

U.S. CUSTOMARY STANDARD

STRUCTURAL PLATE PIPE CULVERT

STANDARD APPROVED FOR USE 12/1993
REVISED: 4/1994 6/2005

STANDARD 603-1

6/10/2008 2:12:13 PM C:\PWworking\PITT\dms81082\st60301.dgn

REG	STATE	PROJECT	SHEET NO.
-	VA	VA-A-AD-48(1)	S20

STRUCTURAL PLATE PIPE ARCH CULVERT

FILL HEIGHT AND METAL THICKNESS TABLE

STEEL

6" x 2" CORRUGATIONS

2 BOLTS PER CORRUGATION

PIPE ARCH SIZE SPAN X RISE	CORNER RADIUS INCH	MIN. COVER INCH	METAL THICKNESS INCH	METAL THICKNESS GAGE	MAXIMUM FILL HEIGHT ABOVE TOP OF PIPE FEET
6' - 1" x 4' - 7"	18	12	0.111	12	16
6' - 4" x 4' - 9"	18	12	0.111	12	15
6' - 9" x 4' - 11"	18	12	0.111	12	14
7' - 0" x 5' - 1"	18	12	0.111	12	14
7' - 3" x 5' - 3"	18	12	0.111	12	13
7' - 8" x 5' - 5"	18	12	0.111	12	13
7' - 11" x 5' - 7"	18	12	0.111	12	12
8' - 2" x 5' - 9"	18	18	0.111	12	12
8' - 7" x 5' - 11"	18	18	0.111	12	11
8' - 10" x 6' - 1"	18	18	0.111	12	11
9' - 4" x 6' - 3"	18	18	0.111	12	10
9' - 6" x 6' - 5"	18	18	0.111	12	10
9' - 9" x 6' - 7"	18	18	0.111	12	10
10' - 3" x 6' - 9"	18	18	0.111	12	9
10' - 8" x 6' - 11"	18	18	0.111	12	9
10' - 11" x 7' - 1"	18	18	0.111	12	9
11' - 5" x 7' - 3"	18	18	0.111	12	8
11' - 7" x 7' - 5"	18	18	0.111	12	8
11' - 10" x 7' - 7"	18	18	0.111	12	8
12' - 4" x 7' - 9"	18	24	0.111	12	7
12' - 6" x 7' - 11"	18	24	0.111	12	7
12' - 8" x 8' - 1"	18	24	0.111	12	7
12' - 10" x 8' - 4"	18	24	0.111	12	6
13' - 5" x 8' - 5"	18	24	0.111	12	6
13' - 11" x 8' - 7"	18	24	0.111	12	6
14' - 1" x 8' - 9"	18	24	0.111	12	5
14' - 3" x 8' - 11"	18	24	0.111	12	5
13' - 3" x 9' - 4"	31	30	0.111	12	12
13' - 6" x 9' - 6"	31	30	0.111	12	12
14' - 0" x 9' - 8"	31	30	0.111	12	12
14' - 2" x 9' - 10"	31	30	0.111	12	12
14' - 5" x 10' - 0"	31	30	0.111	12	11
14' - 11" x 10' - 2"	31	30	0.111	12	11
15' - 4" x 10' - 4"	31	30	0.111	12	11
15' - 7" x 10' - 6"	31	30	0.111	12	11
15' - 10" x 10' - 8"	31	30	0.111	12	10
16' - 3" x 10' - 10"	31	30	0.111	12	10
16' - 6" x 11' - 0"	31	30	0.111	12	10
17' - 0" x 11' - 2"	31	30	0.111	12	10
17' - 2" x 11' - 4"	31	30	0.111	12	10
17' - 5" x 11' - 6"	31	30	0.111	12	9
17' - 11" x 11' - 8"	31	30	0.111	12	9
18' - 1" x 11' - 10"	31	30	0.111	12	9
18' - 7" x 12' - 0"	31	30	0.111	12	9
18' - 9" x 12' - 2"	31	30	0.111	12	9
19' - 3" x 12' - 4"	31	30	0.140	10	8
19' - 6" x 12' - 6"	31	30	0.140	10	8
19' - 8" x 12' - 8"	31	30	0.140	10	8
19' - 11" x 12' - 10"	31	30	0.140	10	8
20' - 5" x 13' - 0"	31	30	0.140	10	7
20' - 7" x 13' - 2"	31	30	0.140	10	7

ALUMINUM

9" x 2½" CORRUGATIONS

4 BOLTS PER CORRUGATION

PIPE ARCH SIZE SPAN X RISE	CORNER RADIUS INCH	MIN. COVER INCH	METAL THICKNESS INCH	METAL THICKNESS GAGE	MAXIMUM FILL HEIGHT ABOVE TOP OF PIPE FEET
6' - 7" x 5' - 8"	32	18	0.100	12	23
6' - 11" x 5' - 9"	32	18	0.100	12	22
7' - 3" x 5' - 11"	32	18	0.100	12	21
7' - 9" x 6' - 0"	32	18	0.100	12	20
8' - 1" x 6' - 1"	32	21	0.100	12	19
8' - 5" x 6' - 3"	32	21	0.100	12	18
8' - 10" x 6' - 4"	32	21	0.100	12	17
9' - 3" x 6' - 5"	32	24	0.100	12	16
9' - 7" x 6' - 6"	32	24	0.100	12	16
9' - 11" x 6' - 8"	32	27	0.100	12	15
10' - 3" x 6' - 9"	32	27	0.100	12	15
10' - 9" x 6' - 10"	32	27	0.100	12	14
11' - 1" x 7' - 0"	32	30	0.100	12	14
11' - 5" x 7' - 1"	32	30	0.100	12	13
11' - 9" x 7' - 2"	32	30	0.100	12	13
12' - 3" x 7' - 3"	32	33	0.100	12	12
12' - 7" x 7' - 5"	32	33	0.100	12	12
12' - 11" x 7' - 6"	32	36	0.100	12	12
13' - 1" x 8' - 2"	32	36	0.100	12	11
13' - 1" x 8' - 4"	32	36	0.100	12	11
13' - 11" x 8' - 5"	32	36	0.100	12	11
13' - 11" x 9' - 5"	32	36	0.100	12	11
14' - 0" x 8' - 7"	32	36	0.100	12	11
14' - 3" x 9' - 7"	32	36	0.100	12	10
14' - 8" x 9' - 8"	32	36	0.125	11	12
14' - 11" x 9' - 10"	32	36	0.125	11	11
15' - 4" x 10' - 0"	32	36	0.125	11	11
15' - 7" x 10' - 2"	32	36	0.125	11	11
16' - 1" x 10' - 4"	32	36	0.125	11	10
16' - 4" x 10' - 6"	32	36	0.150	9	10
16' - 9" x 10' - 8"	32	36	0.150	9	10
17' - 0" x 10' - 10"	32	36	0.150	9	10
17' - 3" x 11' - 0"	32	36	0.150	9	10
17' - 9" x 11' - 2"	32	36	0.175	7	9
18' - 0" x 11' - 4"	32	36	0.175	7	9
18' - 5" x 11' - 6"	32	36	0.175	7	9
18' - 8" x 11' - 8"	32	36	0.200	6	9
19' - 2" x 11' - 9"	32	36	0.200	6	9
19' - 5" x 11' - 11"	32	36	0.200	6	9
19' - 10" x 12' - 1"	32	36	0.200	6	8
20' - 1" x 12' - 3"	32	36	0.200	6	8
20' - 1" x 12' - 6"	32	36	0.200	6	8
20' - 10" x 12' - 7"	32	36	0.225	4	7
21' - 1" x 12' - 9"	32	36	0.225	4	7
21' - 6" x 12' - 11"	32	36	0.225	4	7

NOTE:

1. Fabricate the bottom plates one (1) thickness heavier than the side plates but not heavier than 0.170 inch for steel or 0.175 inch for aluminum.
2. Fasten plates with galvanized steel ¾" bolts and nuts conforming to AASHTO M167.
3. When directed, camber pipe culverts upward from a chord through the inlet and outlet inverts an ordinate amount equal to 1% of the pipe length. Develop camber on a parabolic curve. If the midpoint elevation on the parabolic curve as designed exceeds the elevation of the inlet invert, reduce the amount of camber or increase the pipe culvert gradient.
4. Measure minimum cover from the top of the pipe culvert to the subgrade for flexible pavements, and to the top of the pavement for rigid pavements. Measure maximum fill height from the top of the pipe to the top of the pavement for both flexible and rigid pavement.

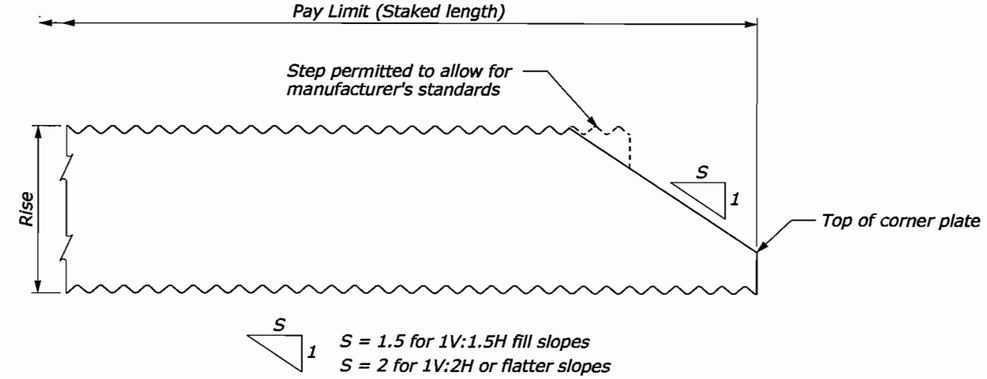

END TREATMENT DIAGRAM

NO SCALE

U.S. DEPARTMENT OF TRANSPORTATION
FEDERAL HIGHWAY ADMINISTRATION
FEDERAL LANDS HIGHWAY

U.S. CUSTOMARY STANDARD

STRUCTURAL PLATE PIPE ARCH CULVERT

STANDARD APPROVED FOR USE 12/1993
REVISED: 4/1994 6/2005

STANDARD 603-2

6/10/2008 2:13:25 PM C:\PWworking\PITT\dms81082\st60302.dgn

PC - 1

DIAMETER INCHES	AREA SQ. FT.	MAXIMUM HEIGHT OF COVER IN FEET				DIAMETER INCHES
		NONREINFORCED CONCRETE (STRENGTH) (SEE NOTE 4)	REINFORCED CONCRETE CLASS A			
			f'c=3000PSI	f'c=4000PSI	f'c=5000PSI	
12	0.8	14' (1800)	14'	19'	29'	12
15	1.2	14' (2125)	14'	19'	29'	15
18	1.8	14' (2400)	14'	20'	29'	18
21	2.4	13' (2700)	14'	20'	29'	21
24	3.1	13' (3000)	14'	20'	29'	24
27	4.0		14'	20'	29'	27
30	4.9		14'	20'	29'	30
33	5.9		14'	20'	29'	33
36	7.1		14'	20'	30'	36
42	9.6		14'	21'	30'	42
48	12.6		14'	21'	30'	48
54	15.9		14'	21'	30'	54
60	19.6		14'	21'	30'	60
66	23.8		14'	21'	30'	66
72	28.3		14'	21'	30'	72
78	33.2		14'	21'	30'	78
84	38.5		14'	21'	30'	84
90	44.4		14'	21'	30'	90
96	50.3		14'	21'	30'	96
102	56.7		14'	21'	30'	102
108	63.6		14'	21'	30'	108

NOTES:

1. COVER HEIGHTS INDICATED IN TABLES ARE FOR FINISHED CONSTRUCTION.
2. TO PROTECT PIPE DURING CONSTRUCTION, MINIMUM HEIGHTS OF COVER PRIOR TO ALLOWING CONSTRUCTION TRAFFIC TO CROSS INSTALLATION ARE TO BE ½ DIAMETER OR 3'0", WHICHEVER IS GREATER. THE COVER SHALL EXTEND THE FULL LENGTH OF THE PIPE. THE APPROACH FILL RAMP IS TO EXTEND A MINIMUM OF 10(DIAMETER + 36") ON EACH SIDE OF THE PIPE, OR TO THE INTERSECTION WITH A CUT.
3. STANDARD MINIMUM FINISHED HEIGHT OF COVER FOR ALL PIPES, EXCEPT THOSE UNDER ENTRANCES, SHALL BE 2.0' OR ½ DIAMETER, WHICHEVER IS GREATER. IN CASES IN WHICH THESE COVER HEIGHTS CANNOT BE ACHIEVED, AN ABSOLUTE MINIMUM FINISHED COVER HEIGHT OF 1.0' WILL BE ALLOWED ONLY IF ALL POSSIBLE MEANS TO OBTAIN THE STANDARD VALUE HAVE BEEN EXHAUSTED. THE MINIMUM FINISHED HEIGHT OF COVER FOR PIPES UNDER ENTRANCES IS 9".
4. CRUSHING STRENGTH (POUNDS PER LINEAR FOOT ULTIMATE STRENGTH)
5. FOR HEIGHT OF COVER GREATER THAN THAT SHOWN FOR CLASS V, A SPECIAL DESIGN CONCRETE PIPE IS REQUIRED.
6. NONREINFORCED PIPE TO BE USED ONLY UNDER ENTRANCES AND LOWER FUNCTIONAL CLASSIFICATION (LFC) ROADWAYS (SEE SHEET 17 OF 18).
7. SEE STANDARD (E603-B) FOR PIPE BEDDING AND BACKFILL REQUIREMENTS.
8. PIPE WITH LESS THAN THE STANDARD MINIMUM COVER IS TO BE MINIMUM CLASS III REINFORCED.

SHEET 1 OF 18

SPECIFICATION REFERENCE: 302, 232

CONCRETE PIPE
HEIGHT OF COVER TABLE FOR H-20 LIVE LOAD

REV. 7/05
107.05

PC-1

HORIZONTAL INSTALLATION (SPAN, RISE)			
EQUIVALENT ROUND SIZE INCHES	SPAN X RISE INCHES	MAX. HEIGHT OF COVER IN FEET	
		CLASS	
		HE-f'c=3000PSI	HE-f'c=4000PSI
18	23 x 14	13'	21'
24	30 x 19	13'	21'
27	34 x 22	13'	21'
30	38 x 24	13'	21'
33	42 x 27	13'	21'
36	45 x 29	13'	21'
39	49 x 32	13'	21'
42	53 x 34	13'	21'
48	60 x 38	13'	21'
54	68 x 43	13'	21'
60	76 x 48	13'	21'
66	83 x 53	13'	21'
72	91 x 58	13'	21'
78	98 x 63	13'	21'
84	106 x 68	13'	21'

VERTICAL INSTALLATION (SPAN, RISE)			
SPAN X RISE INCHES	MAX. HEIGHT OF COVER IN FEET		
	CLASS		
	VE-f'c=3000PSI	VE-f'c=4000PSI	VE-f'c=5000PSI
29 x 45	13	21	29
32 x 49	13	21	29
34 x 53	13	21	29
38 x 60	13	21	29
43 x 68	13	21	29
48 x 76	13	21	29
53 x 83	13	21	29
58 x 91	13	21	29
63 x 98	13	21	29
68 x 106	13	21	29

NOTES:

1. COVER HEIGHTS INDICATED IN TABLES ARE FOR FINISHED CONSTRUCTION.
2. TO PROTECT PIPE DURING CONSTRUCTION, MINIMUM HEIGHTS OF COVER PRIOR TO ALLOWING CONSTRUCTION TRAFFIC TO CROSS INSTALLATION ARE TO BE ½ SPAN OR 3', WHICHEVER IS GREATER. THE COVER SHALL EXTEND THE FULL LENGTH OF THE PIPE. THE APPROACH FILL RAMP IS TO EXTEND A MINIMUM OF 10(SPAN + 36") ON EACH SIDE OF THE PIPE OR TO THE INTERSECTION WITH A CUT.
3. STANDARD MINIMUM FINISHED HEIGHT OF COVER FOR ALL PIPES SHALL BE 2.0' OR ½ SPAN, WHICHEVER IS GREATER. IN CASES IN WHICH THESE COVER HEIGHTS CANNOT BE ACHIEVED, AN ABSOLUTE MINIMUM FINSHED COVER HEIGHT OF 1.0' WILL BE ALLOWED ONLY IF ALL POSSIBLE MEANS TO OBTAIN THE STANDARD VALUE HAVE BEEN EXHAUSTED. MINIMUM FINISHED HEIGHT OF COVER FOR PIPE UNDER ENTRANCES IS 9".
4. SEE STANDARD (E603-B) FOR PIPE BEDDING AND BACKFILL REQUIREMENTS.

SHEET 2 OF 18

REINFORCED ELLIPTICAL CONCRETE PIPE
HEIGHT OF COVER TABLES FOR H-20 LIVE LOAD

REV. 7/05
107.06

SPECIFICATION REFERENCE: 302, 232

U.S. DEPARTMENT OF TRANSPORTATION
FEDERAL HIGHWAY ADMINISTRATION
EASTERN FEDERAL LANDS HIGHWAY DIVISION

DETAIL

H-20 LIVE LOAD

DETAIL APPROVED FOR USE --/----

REVISED:

DETAIL E603-A

SHEET 1 OF 9

REG	STATE	PROJECT	SHEET NO.
-	VA	VA-A-AD-48(1)	S21

PC-1

CORRUGATED STEEL PIPE 2 2/3" x 1/2" CORRUGATIONS							
PIPE DIAMETER	AREA	MAXIMUM HEIGHT OF COVER IN FEET					MINIMUM SHEET THICKNESS FOR ENTRANCE WITH LESS THAN 1 FT COVER INCHES (GAUGE)
		SHEET THICKNESS IN INCHES (GAUGE)					
INCHES	SQ. FT.	0.064 (16)	0.079 (14)	0.109 (12)	0.138 (10)	0.168 (8)	
12	0.79	18	100				0.064 (16)
15	1.23	18	80	100	100		0.064 (16)
18	1.77	18	55	71	89	94	0.064 (16)
21	2.40	18	41	51	62	74	0.079 (14)
24	3.14	17	33	40	47	55	0.109 (12)
27	3.98	17	28	33	38	44	
30	4.91	17	25	28	32	36	
33	5.94	17	23	25	28	31	
36	7.1	16	21	23	26	28	
42	9.6	16	20	21	22	24	
48	12.6	15	19	19	20	21	
54	16.0		18	19	19	20	
60	19.6			18	19	19	
66	23.8				18	18	
72	28.3				18	18	
78	33.2					18	
84	38.5					17	

CORRUGATED STEEL PIPE 3" x 1" AND 5" x 1" CORRUGATIONS						
PIPE DIAMETER	AREA	MAXIMUM HEIGHT OF COVER IN FEET				
		SHEET THICKNESS IN INCHES (GAUGE)				
INCHES	SQ. FT.	0.064 (16)	0.079 (14)	0.109 (12)	0.138 (10)	0.168 (8)
36	7.1	16	38	47	57	66
42	9.6	16	30	36	42	48
48	12.6	15	26	30	34	38
54	16.0	15	23	26	28	31
60	19.6	14	21	23	25	27
66	23.8	14	20	22	23	25
72	28.3	13	19	20	22	23
78	33.2	13	19	20	21	21
84	38.5	12	18	19	20	21
90	44.2	12	18	19	19	20
96	50.3		18	18	19	19
102	56.7		18	18	18	19
108	63.6			18	18	18
114	70.9			18	18	18
120	78.5			17	18	18
132	95.0				17	18
144	113.0					17

NOTES:

1. COVER HEIGHTS INDICATED IN TABLES ARE FOR FINISHED CONSTRUCTION.
2. TO PROTECT PIPE DURING CONSTRUCTION, MINIMUM HEIGHT OF COVER TO BE IN ACCORDANCE WITH TABLE A PRIOR TO ALLOWING CONSTRUCTION TRAFFIC TO CROSS INSTALLATION. THE COVER SHALL EXTEND THE FULL LENGTH OF THE PIPE. THE APPROACH FILL RAMP IS TO EXTEND A MINIMUM OF 15 DIAMETERS ON EACH SIDE OF THE PIPE OR THE INTERSECTION WITH A CUT.
3. MINIMUM FINISHED HEIGHT OF COVER FOR ALL PIPES, EXCEPT UNDER ENTRANCES, SHALL BE 2.0' OR 1/2 SPAN, WHICHEVER IS GREATER. IN CASES IN WHICH THESE COVER HEIGHTS CANNOT BE ACHIEVED, AN ABSOLUTE MINIMUM FINISHED COVER HEIGHT OF 1.0' OR 1/8 DIAMETER, WHICHEVER IS GREATER, WILL BE ALLOWED ONLY IF ALL POSSIBLE MEANS TO OBTAIN THE STANDARD VALUE HAVE BEEN EXHAUSTED. THE MINIMUM FINISHED HEIGHT OF COVER FOR PIPES UNDER ENTRANCES IS 9" FOR PIPE DIAMETERS LESS THAN OR EQUAL TO 24" AND 12" OR 1/8 DIAMETER, WHICHEVER IS GREATER, FOR PIPE DIAMETERS GREATER THAN 24". WHERE A POLYMER COATED PIPE WILL BE USED AND THE SURFACE OVER THE TOP OF THE PIPE WILL BE ASPHALT, CLASS I BACKFILL MATERIAL IS TO BE PLACED UP TO A MINIMUM OF 6" ABOVE THE TOP OF THE PIPE.
4. 16 GAUGE PIPE LIMITED TO THOSE LOCATIONS WHERE PIPE DIAMETER PLUS COVER IS LESS THAN 20'.
5. THE MAXIMUM HEIGHT OF COVER SHOWN IN THE COVER TABLES SHOWN IS BASED ON A SOIL MODULUS OF 700 PSI. ALL OTHER DESIGN CRITERIA ARE IN ACCORDANCE WITH THE AASHTO SPECIFICATIONS FOR SOIL CORRUGATED METAL STRUCTURE INTERACTION SYSTEMS.
6. SEE STANDARD (E603-B) FOR PIPE BEDDING AND BACKFILL REQUIREMENTS.

TABLE A	
PIPE DIAMETER	MINIMUM COVER HEIGHT DURING CONSTRUCTION (SEE NOTE 2)
12" TO 30"	18"
36" AND ABOVE	1/2 DIAMETER

CONCRETE- LINED CORRUGATED STEEL PIPE
MAXIMUM HEIGHT OF COVER TO BE IN ACCORDANCE WITH THE TABLES BUT SHALL NOT EXCEED 30'.

SHEET 3 OF 18

SPECIFICATION REFERENCE: 302, 232

CORRUGATED STEEL PIPE
HEIGHT OF COVER TABLES FOR H-20 LIVE LOAD

REV. 7/05
107.07

PC-1

CORRUGATED ALUMINUM ALLOY PIPE- 2 2/3" x 1/2" CORRUGATIONS							
PIPE DIAMETER	AREA	MAXIMUM HEIGHT OF COVER IN FEET					MINIMUM SHEET THICKNESS FOR ENTRANCES WITH LESS THAN 1 FT. COVER
		SHEET THICKNESS IN INCHES (GAUGE)					
INCHES	SQ. FT.	0.060 (16)	0.075 (14)	0.105 (12)	0.135 (10)	0.164 (8)	
12	0.8	18	50	80	90	93	0.060
15	1.2	18	39	49	60	71	0.105
18	1.8	18	30	35	41	48	0.135
21	2.4	18	25	28	32	36	
24	3.1	17	22	25	27	30	
27	4.0	17	20	22	24	26	
30	4.9	17	19	21	22	23	
33	5.9	17	18	20	21	22	
36	7.1	16	16	19	20	21	
42	9.6	16	18	18	19	19	
48	12.6			18	18	18	
54	15.9			16	18	18	
60	19.6				15	17	
66	23.8					14	
72	28.3					11	

CORRUGATED ALUMINUM ALLOY PIPE- 3" x 1" CORRUGATIONS						
PIPE DIAMETER	AREA	MAXIMUM HEIGHT OF COVER IN FEET				
		SHEET THICKNESS IN INCHES (GAUGE)				
INCHES	SQ. FT.	0.60 (16)	0.75 (14)	0.105 (12)	0.35 (10)	0.164 (8)
36	7.1	16	24	27	30	34
42	9.6	16	21	23	25	27
48	12.6	15	20	21	22	24
54	16.0	15	19	20	21	22
60	19.6	14	18	19	20	20
66	23.8		18	18	19	19
72	28.3		18	18	18	19
78	33.2		17	18	18	18
84	38.5			17	18	18
90	44.2			15	17	18
96	50.3			12	16	17
102	56.7				14	17
108	63.6				11	14
114	70.9					12
120	78.5					10

NOTES:

1. COVER HEIGHTS INDICATED IN TABLES ARE FOR FINISHED CONSTRUCTION.
2. TO PROTECT PIPE DURING CONSTRUCTION, MINIMUM HEIGHT OF COVER TO BE IN ACCORDANCE WITH TABLE A PRIOR TO ALLOWING CONSTRUCTION TRAFFIC TO CROSS INSTALLATION. THE COVER SHALL EXTEND THE FULL LENGTH OF THE PIPE. THE APPROACH FILL RAMP IS TO EXTEND A MINIMUM OF 20 DIAMETERS ON EACH SIDE OF THE PIPE, OR TO THE INTERSECTION WITH A CUT.
3. MINIMUM FINISHED HEIGHT OF COVER FOR ALL PIPES, EXCEPT THOSE UNDER ENTRANCES, SHALL BE 2.0' OR 1/2 SPAN, WHICHEVER IS GREATER. IN CASES IN WHICH THESE COVER HEIGHTS CANNOT BE ACHIEVED, AN ABSOLUTE MINIMUM FINISHED COVER HEIGHT OF 1.0' OR 1/8 DIAMETER, WHICHEVER IS GREATER, WILL BE ALLOWED ONLY IF ALL POSSIBLE MEANS TO OBTAIN THE STANDARD VALUE HAVE BEEN EXHAUSTED. THE MINIMUM FINISHED HEIGHT OF COVER FOR PIPES UNDER ENTRANCES IN 9" FOR PIPE DIAMETERS EQUAL TO OR LESS THAN 18" AND 12" OR 1/8 DIAMETER, WHICHEVER IS GREATER, FOR PIPE DIAMETERS GREATER THAN 18".
4. 16 GAUGE PIPE LIMITED TO THOSE LOCATIONS WHERE PIPE DIAMETER PLUS COVER IS LESS THAN 20'.
5. THE MAXIMUM HEIGHT OF COVER SHOWN IN THE TABLES IS BASED ON A SOIL MODULUS OF 700 PSI. ALL OTHER DESIGN CRITERIA ARE IN ACCORDANCE WITH THE AASHTO SPECIFICATIONS FOR SOIL CORRUGATED METAL STRUCTURE INTERACTION SYSTEMS.
6. SEE STANDARD (E603-B) FOR PIPE BEDDING AND BACKFILL REQUIREMENTS.

TABLE A	
PIPE DIAMETER	MINIMUM COVER HEIGHT DURING CONSTRUCTION (SEE NOTE 2)
12" TO 24"	18"
30" AND OVER	EQUAL TO DIAMETER

SHEET 4 OF 18

CORRUGATED ALUMINUM ALLOY PIPE
HEIGHT OF COVER TABLE FOR H-20 LIVE LOAD

REV. 7/05
107.08

SPECIFICATION REFERENCE: 302, 232

SHEET 2 OF 9

U.S. DEPARTMENT OF TRANSPORTATION
FEDERAL HIGHWAY ADMINISTRATION
EASTERN FEDERAL LANDS HIGHWAY DIVISION

DETAIL

H-20 LIVE LOAD

REVISED:

DETAIL APPROVED FOR USE --/--/----

DETAIL E603-A

REG	STATE	PROJECT	SHEET NO.
-	VA	VA-A-AD-48(1)	S22

PC-1

CORRUGATED ALUMINUM ALLOY PIPE- 6" x 1" CORRUGATIONS						
PIPE DIAMETER	AREA	MAXIMUM HEIGHT OF COVER IN FEET				
		SHEET THICKNESS IN INCHES (GAUGE)				
INCHES	SQ. FT.	0.060 (16)	0.075 (14)	0.105 (12)	0.135 (10)	0.164 (8)
36	7.1	16	24	26	30	33
42	9.6	16	21	23	25	27
48	12.6	15	20	21	22	23
54	16.0	15	19	20	21	21
60	19.6	14	18	19	19	20
66	23.8	14	18	18	19	19
72	28.3		18	18	18	19
78	33.2		16	18	18	18
84	38.5			17	18	18
90	44.2			15	17	18
96	50.3				16	17
102	56.7				13	16
108	63.6					14
114	70.9					11
120	78.5					

NOTES:

1. COVER HEIGHTS INDICATED IN TABLES ARE FOR FINISHED CONSTRUCTION.
2. TO PROTECT PIPE DURING CONSTRUCTION, MINIMUM HEIGHT OF COVER TO BE IN ACCEPTANCE WITH TABLE A AS FOLLOWS PRIOR TO ALLOWING CONSTRUCTION TRAFFIC TO CROSS INSTALLATION. THE COVER SHALL EXTEND THE FULL LENGTH OF THE PIPE. THE APPROACH FILL RAMP IS TO EXTEND A MINIMUM OF 20 DIAMETERS ON EACH SIDE OF THE PIPE, OR TO THE INTERSECTION WITH A CUT.
3. MINIMUM FINISHED HEIGHT OF COVER FOR ALL PIPES, EXCEPT THOSE UNDER ENTRANCES, SHALL BE 2.0' OR 1/2 SPAN, WHICHEVER IS GREATER. IN CASES IN WHICH THESE COVER HEIGHTS CANNOT BE ACHIEVED, AN ABSOLUTE MINIMUM FINISHED COVER HEIGHT OF 1.0' OR 1/8 DIAMETER, WHICHEVER IS GREATER, WILL BE ALLOWED ONLY IF ALL POSSIBLE MEANS TO OBTAIN THE STANDARD VALUE HAVE BEEN EXHAUSTED.
4. 16 GAUGE PIPE LIMITED TO THOSE LOCATIONS WHERE PIPE DIAMETER PLUS COVER IS LESS THAN 20'.
5. THE MAXIMUM HEIGHT OF COVER SHOWN IN THE TABLES IS BASED ON A SOIL MODULUS OF 700 PSI. ALL OTHER DESIGN CRITERIA ARE IN ACCORDANCE WITH THE AASHTO SPECIFICATIONS FOR SOIL CORRUGATED METAL STRUCTURE INTERACTION SYSTEMS.

TABLE A	
PIPE DIAMETER	MINIMUM COVER HEIGHT DURING CONSTRUCTION (SEE NOTE 2)
30" AND OVER	EQUAL TO DIAMETER

SHEET 5 OF 18

SPECIFICATION REFERENCE
232
302

CORRUGATED ALUMINUM ALLOY PIPE
HEIGHT OF COVER TABLE FOR H-20 LIVE LOAD

REV.7/05
107.09

PC-1

MINIMUM SHEET THICKNESS AND DESIGN DATA							
PIPE ARCH DIMENSION					MINIMUM SHEET THICKNESS REQUIRED	MAXIMUM COVER HEIGHT FEET	
						MAXIMUM CORNER PRESSURE	
NOMINAL SIZE SPAN - RISE INCHES	EQUIVALENT PIPE DIAMETER INCHES	AREA SQ. FT.	MAXIMUM "B" INCHES (SEE NOTE 7)	Rc INCHES	INCHES (GAUGE)	4000 LBS./SQ. FT. (SEE NOTE 4)	6000 LBS./SQ. FT. (SEE NOTE 6)
2 2/3" x 1/2" CORRUGATIONS							
17 x 13	15	1.1	5¼"	3	0.064 (16)	11	17
21 x 15	18	1.6	6"	3	0.064 (16)	9	14
24 x 18	21	2.2	7¼"	3	0.064 (16)	8	12
28 x 20	24	2.8	8"	3	0.064 (16)	7	10
35 x 24	30	4.4	9½"	3	0.064 (16)	5	8
42 x 29 ⊛	36	6.4	10½"	3½	0.064 (16)	5	8
49 x 33 ⊛	42	8.7	11½"	4	0.079 (14)	5	8
57 x 38 ⊛	48	11.4	13½"	5	0.109 (12)	5	8
64 x 43 ⊛	54	14.3	15"	6	0.109 (12)	6	9
71 x 47 ⊛	60	17.6	16½"	7	0.138 (10)	6	9
77 x 52 ⊛	66	21.3	18"	8	0.168 (8)	6	10
83 x 57 ⊛	72	25.3	20"	9	0.168 (8)	7	10
3" x 1" AND 5" x 1" CORRUGATIONS							
40 x 31 ⊛	36	6.4	9¾"	5	0.109 (12)	8	12
46 x 36 ⊛	42	8.7	11½"	6	0.109 (12)	8	12
53 x 41 ⊛	48	11.4	13"	7	0.109 (12)	8	13
60 x 46 ⊛	54	14.3	14¾"	8	0.109 (12)	8	13
66 x 51 ⊛	60	17.6	16½"	9	0.109 (12)	9	13
73 x 55 ⊛	66	22.0	21½"	12	0.109 (12)	11	16
81 x 59 ⊛	72	26.0	23"	14	0.109 (12)	11	17
87 x 63	78	31.0	24½"	14	0.109 (12)	10	16
95 x 67	84	35.0	26½"	16	0.109 (12)	11	16
103 x 71	90	40.0	27"	16	0.109 (12)	10	15
112 x 75	96	46.0	29"	18	0.109 (12)	10	16
117 x 79	102	52.0	30¾"	18	0.109 (12)	10	15
128 x 83	108	58.0	29½"	18	0.138 (10)	9	14
137 x 87	114	64.0	30¾"	18	0.138 (10)	8	13
142 x 91	120	71.0	32½"	18	0.168 (8)	8	12

⊛ INDICATES PIPE ARCHES FOR WHICH DIMENSIONS FOR EITHER CORRUGATION MAY BE USED WITHIN HEIGHT OF COVER LIMITATIONS.

NOTES:

1. COVER HEIGHTS INDICATED IN TABLES ARE FOR FINISHED CONSTRUCTION.
2. TO PROTECT PIPE DURING CONSTRUCTION, MINIMUM HEIGHT OF COVER TO BE IN ACCORDANCE WITH TABLE A PRIOR TO ALLOWING CONSTRUCTION TRAFFIC TO CROSS INSTALLATION. THE COVER SHALL EXTEND THE FULL LENGTH OF THE PIPE ARCH. THE APPROACH FILL RAMP IS TO EXTEND A MINIMUM OF [10(HEIGHT +1/2 SPAN)] ON EACH SIDE OF THE PIPE, OR INTERSECTION WITH A CUT.
3. MINIMUM FINISHED HEIGHT OF COVER FOR ALL PIPES, EXCEPT THOSE UNDER ENTRANCES, SHALL BE 2'0" OR 1/2 SPAN, WHICHEVER IS GREATER. IN CASES IN WHICH THESE COVER HEIGHTS CANNOT BE ACHIEVED, AN ABSOLUTE MINIMUM FINISHED COVER HEIGHT OF 1.0' OR 1/8 SPAN, WHICHEVER IS GREATER, WILL BE ALLOWED ONLY IF ALL POSSIBLE MEANS TO OBTAIN THE STANDARD VALUE HAVE BEEN EXHAUSTED. WHERE POLYMER COATED PIPE WILL BE USED AND THE SURFACE OF THE TOP OF THE PIPE WILL BE ASPHALT, CLASS I BACKFILL MATERIAL IS TO BE PLACED UP TO A MINIMUM OF 6" ABOVE THE TOP OF THE PIPE.
4. SEE STANDARD (E603-B) FOR PIPE BEDDING AND BACKFILL REQUIREMENTS.
5. THE MAXIMUM HEIGHT OF COVER SHOWN IN THE TABLES IS BASED ON A SOIL MODULUS OF 700 PSI. ALL OTHER DESIGN CRITERIA ARE IN ACCORDANCE WITH THE AASHTO SPECIFICATIONS FOR SOIL CORRUGATED METAL STRUCTURE INTERACTION SYSTEMS.
6. WHEN DESIGN HEIGHT OF COVER REQUIRES THE USE OF THIS CATEGORY OF PIPE, FOUNDATION AND BACKFILL MUST BE APPROVED BY THE ENGINEER.
7. SPAN OF PIPE ARCHES IS MEASURED "B" INCHES ABOVE THE INVERT. SEE DIAGRAM BELOW FOR ILLUSTRATION OF "B" DIMENSION.

TABLE A	
PIPE ARCH SPAN	MINIMUM COVER HEIGHT DURING CONSTRUCTION (SEE NOTE 2)
17" TO 35"	18"
42" AND ABOVE	1/2 SPAN

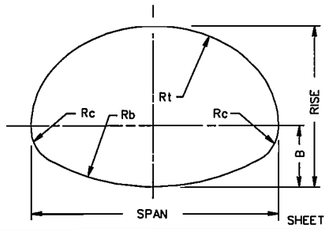

SHEET 6 OF 18

REV. 7/05
107.10

CORRUGATED STEEL PIPE ARCH
HEIGHT OF COVER TABLE FOR H-20 LIVE LOAD

SPECIFICATION REFERENCE
232
302

U.S. DEPARTMENT OF TRANSPORTATION
FEDERAL HIGHWAY ADMINISTRATION
EASTERN FEDERAL LANDS HIGHWAY DIVISION

DETAIL

H-20 LIVE LOAD

DETAIL APPROVED FOR USE --/----

REVISED:

DETAIL E603-A

SHEET 3 OF 9

REG	STATE	PROJECT	SHEET NO.
-	VA	VA-A-AD-48(1)	S23

PC-1

MINIMUM SHEET THICKNESS AND DESIGN DATA

PIPE ARCH DIMENSION				MINIMUM SHEET THICKNESS REQUIRED	MAXIMUM COVER HEIGHT (FEET)	
					MAXIMUM CORNER PRESSURE	
NOMINAL SIZE SPAN-RISE INCHES	EQUIVALENT PIPE DIAMETER INCHES	AREA SQ. FT.	Rc INCHES	INCHES (GAUGE)	4000 LBS./SQ. FT. (SEE NOTE 4)	6000 LBS./SQ. FT. (SEE NOTE 6)
2 2/3" x ½" CORRUGATIONS						
17 x 13	15	1.1	3"	0.060 (16)	11	17
21 x 15	18	1.6	3"	0.060 (16)	9	14
24 x 18	21	2.2	3"	0.060 (16)	8	12
28 x 20	24	2.8	3"	0.075 (14)	7	10
35 x 24	30	4.4	3"	0.075 (14)	5	8
42 x 29 ⊛	36	6.4	3½"	0.105 (12)	5	8
49 x 33 ⊛	42	8.7	4"	0.105 (12)	5	8
57 x 38 ⊛	48	11.4	5"	0.135 (10)	5	8
64 x 43 ⊛	54	14.3	6"	0.135 (10)	6	9
71 x 47 ⊛	60	17.6	7"	0.164 (8)	6	9
3" x 1" CORRUGATIONS						
40 x 31 ⊛	36	6.4	5"	0.060 (16)	8	12
46 x 36 ⊛	42	8.7	6"	0.060 (16)	8	12
53 x 41 ⊛	48	11.4	7"	0.060 (16)	8	13
60 x 46 ⊛	54	14.3	8"	0.075 (14)	8	13
66 x 51 ⊛	60	17.6	9"	0.075 (14)	9	13
73 x 55	66	22.0	12"	0.105 (12)	11	16
81 x 59	72	26.0	14"	0.105 (12)	11	17
87 x 63	78	31.0	14"	0.135 (10)	10	16
95 x 67	84	35.0	16"	0.135 (10)	11	16
103 x 71	90	40.0	16"	0.164 (8)	10	15
112 x 75	96	46.0	18"	0.164 (8)	10	13
117 x 79	102	52.0	18"	0.164 (8)	10	11

⊛ INDICATES PIPE ARCHES FOR WHICH DIMENSIONS FOR EITHER CORRUGATION MAY BE USED WITHIN HEIGHT OF COVER LIMITATIONS.

NOTES:

1. COVER HEIGHTS INDICATED IN TABLES ARE FOR FINISHED CONSTRUCTION.
2. TO PROTECT PIPE DURING CONSTRUCTION, MINIMUM HEIGHT OF COVER TO BE IN ACCORDANCE WITH TABLE A PRIOR TO ALLOWING CONSTRUCTION TRAFFIC TO CROSS INSTALLATION. THE COVER SHALL EXTEND THE FULL LENGTH OF THE PIPE ARCH. THE APPROACH FILL RAMP IS TO EXTEND A MINIMUM OF [10(HEIGHT + ½ SPAN)] ON EACH SIDE OF THE STRUCTURE OR TO THE INTERSECTION WITH A CUT.
3. MINIMUM FINISHED HEIGHT OF COVER FOR ALL PIPES, EXCEPT THOSE UNDER ENTRANCES, SHALL BE 2'0" OR ⅛ SPAN, WHICHEVER IS GREATER. IN CASES IN WHICH THESE COVER HEIGHTS CANNOT BE ACHIEVED, AN ABSOLUTE MINIMUM FINISHED COVER HEIGHT OF 1.0' OR ⅛ SPAN, WHICHEVER IS GREATER, WILL BE ALLOWED ONLY IF ALL POSSIBLE MEANS TO OBTAIN THE STANDARD VALUE HAVE BEEN EXHAUSTED.
4. SEE STANDARD (E603-B) FOR PIPE BEDDING AND BACKFILL REQUIREMENTS.
5. THE MAXIMUM HEIGHT OF COVER SHOWN IN THE TABLES IS BASED ON A SOIL MODULUS OF 700 PSI. ALL OTHER DESIGN CRITERIA ARE IN ACCORDANCE WITH THE AASHTO SPECIFICATIONS AND VDOT MODIFICATIONS FOR SOIL CORRUGATED METAL STRUCTURE INTERACTION SYSTEMS.
6. WHEN DESIGN HEIGHT OF COVER REQUIRES THE USE OF THIS CATEGORY OF PIPE BEDDING FOUNDATION AND BACKFILL MUST BE APPROVED BY THE ENGINEER.
7. LAPPED LONGITUDINAL SEAMS SHALL BE STAGGERED SO AS TO ALTERNATE ON EACH SIDE OF THE CENTER OF ARCH TOP BY APPROXIMATELY 15 PERCENT OF THE PERIPHERY.
8. A TOLERANCE OF PLUS, OR MINUS, 1" IS PERMISSIBLE FOR DIMENSIONS OF SPAN, RISE, AND CORNER RADIUS.

TABLE A

PIPE DIAMETER	MINIMUM COVER HEIGHT DURING CONSTRUCTION (SEE NOTE 2)
17" TO 35"	18"
42" AND ABOVE	½ SPAN

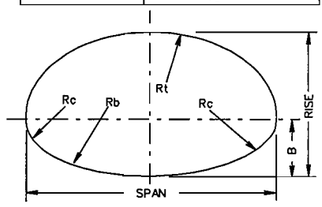

SHEET 7 OF 18

SPECIFICATION REFERENCE: 232, 302

CORRUGATED ALUMINUM ALLOY PIPE ARCH HEIGHT OF COVER TABLE FOR H-20 LIVE LOAD

REV. 7/05

107.11

PC-1

STRUCTURAL PLATE STEEL PIPE- 6" x 2" CORRUGATIONS

PIPE DIAMETER INCHES	AREA SQ. FT.	MINIMUM HEIGHT OF COVER IN FEET — SHEET THICKNESS IN INCHES (GAUGE)						
		0.109 (12)	0.138 (10)	0.168 (8)	0.188 (7)	0.218 (5)	0.249 (3)	0.280 (1)
60	20	43	50	58	63	71	79	88
66	24	36	42	48	51	58	64	70
72	28	32	36	40	43	48	53	58
78	33	28	32	35	38	41	45	49
84	38	26	29	32	33	36	39	43
90	44	24	27	29	30	33	35	38
96	50	23	25	27	28	30	32	34
102	57	22	23	25	26	28	29	31
108	64	21	22	24	25	26	27	29
114	71	20	21	23	23	25	26	27
120	78	20	21	22	22	23	24	25
132	95	19	20	20	21	22	22	23
144	113	18	19	20	20	21	21	22
156	133	18	18	19	19	20	20	21
168	154	17	18	18	19	19	19	20
180	177	15	18	18	18	19	19	19
192	201		18	18	18	18	19	19
204	227		17	18	18	18	18	18
216	254			17	18	18	18	18
228	284			17	17	18	18	18
240	314				16	17	18	18

NOTES:

1. COVER HEIGHTS INDICATED IN TABLE ARE FOR FINISHED CONSTRUCTION.
2. TO PROTECT PIPE DURING CONSTRUCTION MINIMUM HEIGHT OF COVER PRIOR TO ALLOWING CONSTRUCTION TRAFFIC TO CROSS INSTALLATION IS TO BE ½ DIAMETER. THIS COVER SHALL EXTEND THE FULL LENGTH OF THE PIPE. THE APPROACH FILL RAMP IS TO EXTEND A MINIMUM OF [10(DIAMETER + 36")] ON EACH SIDE OF THE PIPE OR THE INTERSECTION WITH A CUT
3. MINIMUM FINISHED HEIGHT OF COVER FOR ALL PIPES, EXCEPT THOSE UNDER ENTRANCES, SHALL BE 2.0' OR ½ DIAMETER, WHICHEVER IS GREATER. IN CASES IN WHICH THESE COVER HEIGHTS CANNOT BE ACHIEVED, AN ABSOLUTE MINIMUM FINISHED COVER HEIGHT OF 1.0' OR ⅛ DIAMETER WILL BE ALLOWED ONLY IF ALL POSSIBLE MEANS TO OBTAIN THE STANDARD VALUE HAVE BEEN EXHAUSTED.
4. THE MAXIMUM HEIGHT OF COVER SHOWN IN THE TABLES IS BASED ON A SOIL MODULUS OF 700 PSI. ALL OTHER DESIGN CRITERIA ARE IN ACCORDANCE WITH AASHTO SPECIFICATIONS FOR SOIL CORRUGATED METAL STRUCTURE INTERSECTION SYSTEMS.
5. STRUCTURAL PLATE PIPE DIMENSIONS ARE TO INSIDE CREST AND ARE SUBJECT TO MANUFACTURING TOLERANCES.
6. SEE STANDARD (E603-B) FOR BEDDING AND BACKFILL REQUIREMENTS.

SHEET 8 OF 18

STRUCTURAL PLATE STEEL PIPE HEIGHT OF COVER TABLE FOR H-20 LIVE LOAD

REV. 7/05

107.12

SPECIFICATION REFERENCE: 232, 302

U.S. DEPARTMENT OF TRANSPORTATION
FEDERAL HIGHWAY ADMINISTRATION
EASTERN FEDERAL LANDS HIGHWAY DIVISION

DETAIL

H-20 LIVE LOAD

SHEET 4 OF 9

DETAIL APPROVED FOR USE ---/---

REVISED:

DETAIL E603-A

REG	STATE	PROJECT	SHEET NO.
-	VA	VA-A-AD-48(1)	S24

PC-1

STRUCTURAL PLATE ALUMINUM ALLOY PIPE 9" x 2½" CORRUGATIONS								
PIPE DIAMETER	AREA	MAXIMUM HEIGHT OF COVER IN FEET						
		SHEET THICKNESS IN INCHES						
INCHES	SQ. FT.	0.10	0.125	0.15	0.175	0.20	0.225	0.25
60	20	29	32	35	38	41	45	48
66	24	26	28	31	33	35	38	40
72	28	24	25	27	29	31	33	35
78	33	22	24	25	26	28	29	31
84	38	21	22	23	25	26	27	28
90	44	20	21	22	23	24	25	26
96	50	19	20	21	22	23	23	24
102	57	18	20	20	21	22	22	23
108	64	17	19	20	20	21	21	22
114	71	16	19	19	20	20	21	21
120	78	15	18	19	19	20	20	20
132	95	14	18	18	19	19	19	19
144	113	12	18	18	18	18	19	19
156	133		17	18	18	18	18	18
168	154			17	18	18	18	18
180	177				17	18	18	18
192	201					17	17	17
204	227					14	16	17
216	254						13	15
228	284							13

NOTES:

1. COVER HEIGHTS INDICATED IN TABLE ARE FOR FINISHED CONSTRUCTION.
2. TO PROTECT PIPE DURING CONSTRUCTION, MINIMUM HEIGHT OF COVER PRIOR TO ALLOWING CONSTRUCTION TRAFFIC TO CROSS INSTALLATION SHALL BE ½ DIAMETER. THIS COVER SHALL EXTEND THE FULL LENGTH OF THE PIPE. THE APPROACH FILL RAMP IS TO EXTEND A MINIMUM OF [10(DIAMETER + 36")] ON EACH SIDE OF THE PIPE OR TO THE INTERSECTION WITH A CUT.
3. MINIMUM FINISHED HEIGHT OF COVER FOR ALL PIPES, EXCEPT THOSE UNDER ENTRANCES, SHALL BE 2.0' OR ½ DIAMETER, WHICHEVER IS GREATER. IN CASES IN WHICH THESE COVER HEIGHTS CANNOT BE ACHIEVED, AND ABSOLUTE MINIMUM FINISHED COVER HEIGHT OF 1.0' OR ⅛ DIAMETER, WHICHEVER IS GREATER, WILL BE ALLOWED ONLY IF ALL POSSIBLE MEANS TO OBTAIN THE STANDARD VALUE HAVE BEEN EXHAUSTED.
4. SEE STANDARD (E603-B) FOR PIPE BEDDING AND BACKFILL REQUIREMENTS.
5. THE MAXIMUM HEIGHT OF COVER SHOWN IN THE TABLES IS BASED ON A SOIL MODULUS OF 700 PSI. ALL OTHER DESIGN CRITERIA ARE IN ACCORDANCE WITH AASHTO SPECIFICATIONS FOR SOIL CORRUGATED METAL STRUCTURE INTERACTION SYSTEMS.
6. STEEL BOLTS ONLY TO BE USED. BOLTS ARE ¾" DIAMETER HIGH STRENGTH TO MEET CURRENT AASHTO DESIGNATION M-164 AND GALVANIZED TO MEET CURRENT ASTM DESIGNATION A-394. BOLTS ARE TO BE LOCATED IN THE VALLEY AND CREST OF EACH CORRUGATION IN DOUBLE ROWS SPACED 1¾" APART.

SHEET 9 OF 18

SPECIFICATION REFERENCE: 232, 302

STRUCTURAL PLATE ALUMINUM ALLOY PIPE
HEIGHT OF COVER TABLE FOR H-20 LIVE LOAD

REV. 7/05
107.13

PC-1

MINIMUM THICKNESS-STRUCTURAL PLATE STEEL PIPE ARCHES 6" x 2" CORRUGATIONS						
PIPE ARCH DIMENSION				MINIMUM SHEET THICKNESS REQUIRED	MAXIMUM ALLLOWABLE COVER HEIGHT (FT.)	
NOMINAL SIZE		AREA	Rc		MAXIMUM CORNER PRESSURE	
SPAN	RISE	SQ. FT.	INCHES	GAUGE	4000 LBS./SQ.FT. (SEE NOTE 4)	6000 LBS./SQ.FT. (SEE NOTE 6)
6'-1"	4'-7"	22	18	12	16	24
6'-4"	4'-9"	24	18	12	15	23
6'-9"	4'-11"	26	18	12	14	22
7'-0"	5'-1"	28	18	12	14	21
7'-3"	5'-3'	31	18	12	13	20
7'-8"	5'-5"	33	18	12	12	19
7'-11"	5'-7"	35	18	12	12	18
8'-2"	5'-9"	38	18	12	12	18
8'-7"	5'-11"	40	18	12	11	17
8'-10"	6'-1"	43	18	12	11	16
9'-4"	6'-3"	46	18	12	10	16
9'-6"	6'-5"	49	18	12	10	15
9'-9"	6'-7"	52	18	12	10	15
10'-3"	6'-9"	55	18	12	9	14
10'-8"	6'-11"	58	18	12	9	14
10'-11"	7'-1"	61	18	12	9	13
11'-5"	7'-3"	64	18	12	8	13
11-7"	7'-5"	67	18	12	8	12
11'-10"	7'-7"	71	18	12	8	12
12'-4"	7'-9"	74	18	12	8	12
12'-6"	7'-11"	78	18	12	8	12
12'-8"	8'-1"	81	18	12	7	11
12'-10"	8'-4"	85	18	12	7	11
13'-5"	8'-5"	89	18	12	7	11
13-11"	8'-7"	93	18	12	7	10
14'-1"	8'-9"	97	18	12	7	10
14'-3"	8'-11"	101	18	12	6	10
14'-10"	9'-1"	105	18	12	6	10
15'-4"	9'-3"	109	18	12	6	9
15'-6"	9'-5"	113	18	12	6	9
15'-8"	9'-7"	118	18	12	6	9
15'-10"	9'-10"	122	18	12	6	9
16'-5"	9'-11"	126	18	12	6	9
16'-7"	10'-1"	131	18	12	6	9

NOTES

1. COVER HEIGHTS INDICATED IN TABLE ARE FOR FINISHED CONSTRUCTION.
2. TO PROTECT PIPE DURING CONSTRUCTION, MINIMUM HEIGHT OF COVER PRIOR TO ALLOWING CONSTRUCTION TRAFFIC TO CROSS INSTALLATION SHALL BE ½ SPAN. THE COVER SHALL EXTEND THE FULL LENGTH OF THE PIPE ARCH. THE APPROACH FILL RAMP IS TO EXTEND A MINIMUM OF [10(HEIGHT + ½SPAN)] ON EACH SIDE OF THE STRUCTURE, OR TO THE INTERSECTION WITH A CUT.
3. MINIMUM FINISHED HEIGHT OF COVER FOR ALL PIPES, EXCEPT THOSE UNDER ENTRANCES, SHALL BE 2.0' OR ½ SPAN, WHICHEVER IS GREATER. IN CASES IN WHICH THESE COVER HEIGHTS CANNOT BE ACHIEVED, AN ABSOLUTE MINIMUM FINISHED COVER HEIGHT OF 1.0' OR ⅛ SPAN, WHICHEVER IS GREATER, WIL BE ALLOWED ONLY IF ALL POSSIBLE MEANS TO OBTAIN THE STANDARD VALUE HAVE BEEN EXHAUSTED.
4. SEE STANDARD (E603-B) FOR PIPE BEDDING AND BACKFILL REQUIREMENTS.
5. THE MAXIMUM HEIGHT OF COVER SHOWN IN THE TABLES IS BASED ON A SOIL MODULUS OF 700 PSI. ALL OTHER DESIGN CRITERIA ARE IN ACCORDANCE WITH THE AASHTO SPECIFICATIONS FOR SOIL CORRUGATED METAL STRUCTURE INTERACTION SYSTEMS.
6. WHEN DESIGN HEIGHT OF COVER REQUIRES THE USE OF THIS CATEGORY OF PIPE, BEDDING AND BACKFILL MUST BE APPROVED BY THE ENGINEER.
7. STRUCTURAL PLATE PIPE-ARCH DIMENSIONS ARE TO INSIDE OF CREST AND ARE SUBJECT TO MANUFACTURING TOLERANCES.

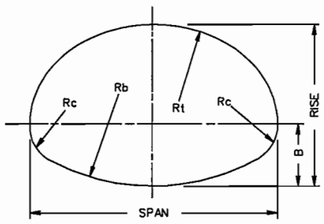

SHEET 10 OF 18

STRUCTURAL PLATE STEEL PIPE ARCH
HEIGHT OF COVER TABLE FOR H-20 LIVE LOAD

REV. 7/05
107.14

SPECIFICATION REFERENCE: 232, 302

U.S. DEPARTMENT OF TRANSPORTATION
FEDERAL HIGHWAY ADMINISTRATION
EASTERN FEDERAL LANDS HIGHWAY DIVISION

DETAIL

H-20 LIVE LOAD

SHEET 5 OF 9

REVISED: DETAIL APPROVED FOR USE --/--/----

DETAIL E603-A

REG	STATE	PROJECT	SHEET NO.
-	VA	VA-A-AD-48(1)	S25

PC-1

MINIMUM THICKNESS-STRUCTURAL PLATE STEEL PIPE ARCHES 6" x 2" CORRUGATIONS

PIPE ARCH DIMENSION				MINIMUM SHEET THICKNESS REQUIRED	MAXIMUM ALLOWABLE COVER HEIGHT (FT.)	
					MAXIMUM CORNER PRESSURE	
SPAN	RISE	AREA SQ. FT.	Rc INCHES	INCHES (GAUGE)	4000 LBS./SQ. FT. (SEE NOTE 4)	6000 LBS./SQ. FT. (SEE NOTE 6)
13'-3'	9'-4"	97	31	12	12	18 ⊛
13'-6'	9'-6"	102	31	12	12	17 ⊛
14'-0"	9'-8"	105	31	12	12	17 ⊛
14'-2"	9'-10"	109	31	12	12	16 ⊛
14'-5"	10'-0"	114	31	12	11	16 ⊛
14'-11"	10'-2"	118	31	12	11	16 ⊛
15'-4"	10'-4"	123	31	12	11	15 ⊛
15'-7"	10'-6"	127	31	12	11	15 ⊛
15'-10"	10'-8"	132	31	12	10	14 ⊛
16'-3"	10'-10"	137	31	12	10	14 ⊛
16'-6"	11'-0"	142	31	12	10	14 ⊛
17'-0"	11'-2"	146	31	12	10	14 ⊛
17'-2"	11'-4"	151	31	12	10	13 ⊛
17'-5"	11'-6"	157	31	12	9	13 ⊛
17'-11"	11'-8"	161	31	12	9	13 ⊛
18'-1"	11'-10"	167	31	12	9	13 ⊛
18'-7"	12'-0"	172	31	12	9	12 ⊛
18'-9"	12'-2"	177	31	12	9	12 ⊛
19'-3"	12'-4"	182	31	10	8	13
19'-6"	12'-6"	188	31	10	8	13
19'-8"	12'-8"	194	31	10	8	13
19'-11"	12'-10"	200	31	10	8	12
20'-5"	13'-0"	205	31	10	8	12
20'-7"	13'-2"	211	31	10	8	12

⊛ MAXIMUM COVER HEIGHTS SHOWN MAY BE INCREASED BY A MAXIMUM OF 12" IF A SHEET THICKNESS GREATER THAN 12 GAUGE IS USED.

NOTES:

1. COVER HEIGHTS INDICATED IN TABLES ARE FOR FINISHED CONSTRUCTION.
2. TO PROTECT PIPE DURING CONSTRUCTION, MINIMUM HEIGHT OF COVER PRIOR TO ALLOWING CONSTRUCTION TRAFFIC TO CROSS INSTALLATION SHALL BE ½ SPAN. THE COVER SHALL EXTEND THE FULL LENGTH OF THE PIPE ARCH. THE APPROACH FILL RAMP IS TO EXTEND A MINIMUM OF [10(HEIGHT - ½ SPAN)] ON EACH SIDE OF THE STRUCTURE OR TO THE INTERSECTION WITH A CUT.
3. MINIMUM FINISHED HEIGHT OF COVER FOR ALL PIPES, EXCEPT THOSE UNDER ENTRANCES, SHALL BE ¼ SPAN. IN CASES IN WHICH THIS COVER HEIGHT CANNOT BE ACHIEVED, AN ABSOLUTE MINIMUM FINSHED COVER HEIGHT OF ⅛ SPAN WILL BE ALLOWED ONLY IF ALL POSSIBLE MEANS TO OBTAIN THE STANDARD VALUE HAVE BEEN EXHAUSTED.
4. SEE STANDARD (E603-B) FOR PIPE BEDDING AND BACKFILL REQUIREMENTS.
5. STRUCTURAL PLATE PIPE-ARCH DIMENSIONS ARE TO INSIDE OF CREST AND ARE SUBJECT TO MANUFACTURING TOLERANCES.
6. WHEN DESIGN HEIGHT OF COVER REQUIRES THE USE OF THIS CATEGORY OR PIPE, BEDDING AND BACKFILL MUST BE APPROVED BY THE ENGINEER.
7. THE MAXIMUM HEIGHT OF COVER SHOWN IN THE TABLES IS BASED ON A SOIL MODULUS OF 700 PSI. ALL OTHER DESIGN CRITERIA ARE IN ACCORDANCE WITH THE AASHTO SPECIFICATIONS FOR SOIL CORRUGATED METAL STRUCTURE INTERACTION SYSTEMS.

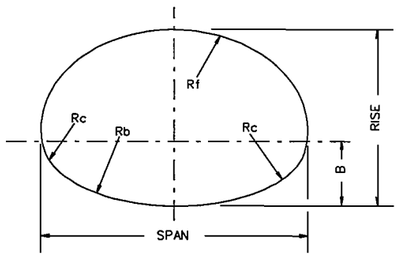

SHEET 11 OF 18

SPECIFICATION REFERENCE: 232, 302

STRUCTURAL PLATE STEEL PIPE ARCH HEIGHT OF COVER TABLE FOR H-20 LIVE LOAD

REV. 7/05
107.15

PC-1

STRUCTURAL PLATE ALUMINUM ALLOY PIPE ARCHES 9' x 2½" CORRUGATIONS

SPAN	RISE	CORNER RADIUS	MAXIMUM COVER HEIGHT IN FEET							AREA SQ.FT.
			MINIMUM SHEET THICKNESS IN INCHES							
			MAXIMUM CORNER PRESSURE IN LBS./SQ. FT.							
			0.100"	0.125"		0.150"		0.175"		
			4000 (SEE NOTE 4)	4000 (SEE NOTE 4)	6000 (SEE NOTE 6)	4000 (SEE NOTE 4)	6000 (SEE NOTE 6)	4000 (SEE NOTE 6)	6000 (SEE NOTE 6)	
6'-2"	5'-0"	31.8	25	28	36	28	42	28	42	24.7
6'-7'	4'-11'	31.8	23	26	34	26	40	26	40	26.6
6'-7"	5'-8"	31.8	23	26	34	26	40	26	40	29.6
6'-11"	5'-9"	31.8	22	25	32	25	38	25	38	31.9
7'-3"	5'-11"	31.8	21	24	31	24	36	24	36	34.3
7'-9"	6'-0"	31.8	20	22	29	22	34	22	34	36.8
8'-1"	6'-1"	31.8	19	21	28	21	32	21	32	39.3
8'-5"	6'-3"	31.8	18	20	27	20	31	20	31	41.9
8'-10"	6'-4"	31.8	17	20	25	20	30	20	30	44.5
9'-3"	6'-5"	31.8	16	19	24	19	28	19	28	45.1
9'-7"	6'-6"	31.8	16	18	23	18	27	18	27	49.9
9'-11"	6'-8"	31.8	15	17	22	17	26	17	26	52.7
10'-3"	6'-9"	31.8	15	17	22	17	25	17	25	55.5
10'-9"	6'-10"	31.8	14	16	21	16	24	16	24	58.4
11'-1"	7'-0"	31.8	14	15	20	15	23	15	23	61.4
11'-5"	7'-1"	31.8	13	15	19	15	23	15	23	64.4
11'-9"	7'-2"	31.8	13	15	19	15	22	15	22	67.5
12'-3"	7'-3"	31.8	12	14	18	14	21	14	21	70.5
12'-7"	7'-5"	31.8	12	14	18	14	21	14	21	73.7
12'-11"	7'-6"	31.8	12	13	17	13	20	13	20	77.0
13'-1"	8'-2"	31.8	11	13	17	13	20	13	20	83.0
13'-1"	8'-4"	31.8	11	13	17	13	20	13	20	86.8
13'-11"	8'-5"	31.8	11	12	16	12	19	12	19	90.3
14'-0"	8'-7"	31.8	11	12	16	12	18	12	18	94.2
13'-11"	9'-5"	31.8	11	12	16	12	19	12	19	101.5
14'-3"	9'-7"	31.8	10	12	15	12	18	12	18	105.7
14'-8"	9'-8"	31.8		12	14	12	17	12	18	109.9
14'-11"	9'-10"	31.8		11	13	11	16	11	17	114.2
15'-4"	10'-0"	31.8		11	12	11	14	11	17	118.6
15'-7"	10'-2"	31.8		11	11	11	14	11	16	123.1
16'-1"	10'-4"	31.8		10		10	12	10	15	127.6
16'-4"	10'-6"	31.8				10	12	10	14	132.3
16'-9"	10'-8"	31.8				10	11	10	13	136.9
17'-0"	10'-10"	31.8				10		10	12	141.8
17'-3"	11'-0"	31.8				10		10	12	
18'-0"	11'-4"	31.8						9	10	

NOTES:

1. COVER HEIGHTS INDICATED IN TABLE ARE FOR FINISHED CONSTRUCTION.
2. TO PROTECT PIPE DURING CONSTRUCTION, MINIMUM HEIGHT OF COVER PRIOR TO ALLOWING CONSTRUCTION TRAFFIC TO CROSS INSTALLATION TO BE ½ SPAN. THE COVER SHALL EXTEND THE FULL LENGTH OF THE PIPE ARCH. THE APPROACH FILL RAMP IS TO EXTEND A MINIMUM OF [10(RISE - ½ SPAN)] ON EACH SIDE OF THE PIPE, OR TO THE INTERSECTION WITH A CUT.
3. MINIMUM FINISHED HEIGHT OF COVER FOR ALL PIPES, EXCEPT THOSE UNDER ENTRANCES, SHALL BE 2.0' OR ¼ SPAN, WHICHEVER IS GREATER. IN CASES IN WHICH THESE COVER HEIGHTS CANNOT BE ACHIEVED, AN ABSOLUTE MINIMUM FINISHED COVER HEIGHT OF 1.0' OR ⅛ SPAN, WHICHEVER IS GREATER, WILL BE ALLOWED ONLY IF ALL POSSIBLE MEANS TO OBTAIN THE STANDARD VALUE HAVE BEEN EXHAUSTED.
4. SEE STANDARD (E603-B) FOR BEDDING AND BACKFILL REQUIREMENTS.
5. THE MAXIMUM HEIGHT OF COVER SHOWN IN THE TABLES IS BASED ON A SOIL MODULUS OF 700 PSI. ALL OTHER DESIGN CRITERIA ARE IN ACCORDANCE WITH THE AASHTO SPECIFICATIONS FOR SOIL CORRUGATED METAL STRUCTURE INTERACTION SYSTEMS.
6. WHEN DESIGN HEIGHT OF COVER REQUIRES THE USE OF THIS CATEGORY OF PIPE, BEDDING AND BACKFILL MUST BE APPROVED BY THE ENGINEER.
7. BOLTS ARE ¾" DIAMETER, HIGH STRENGTH TO MEET CURRENT A.S.T.M. DESIGNATION M-164 AND GALVANIZED TO MEET CURRENT A.S.T.M. DESIGNATION A-394. BOLTS ARE TO BE LOCATED IN THE VALLEY AND CREST OF EACH CORRUGATION IN DOUBLE ROWS SPACED 1¾" APART.
8. STRUCTURAL PLATE PIPE-ARCH DIMENSIONS ARE TO INSIDE CREST AND ARE SUBJECT TO MANUFACTURING TOLERANCES.

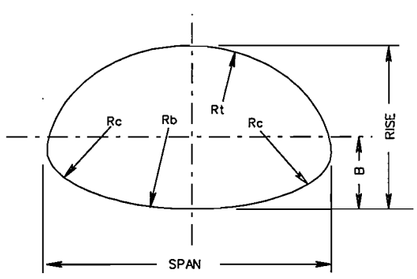

SHEET 12 OF 18

STRUCTURAL PLATE ALUMINUM ALLOY PIPE ARCH HEIGHT OF COVER TABLE FOR H-20 LIVE LOAD

REV. 7/05
107.16

SPECIFICATION REFERENCE: 232, 302

U.S. DEPARTMENT OF TRANSPORTATION
FEDERAL HIGHWAY ADMINISTRATION
EASTERN FEDERAL LANDS HIGHWAY DIVISION

DETAIL

H-20 LIVE LOAD

SHEET 6 OF 9

REVISED:

DETAIL APPROVED FOR USE --/--/----

DETAIL E603-A

REG	STATE	PROJECT	SHEET NO.
-	VA	VA-A-AD-48(1)	S26

PC-1

ALUMINUM SPIRAL RIB PIPE 3/4" WIDE x 3/4" DEEP RIBS SPACED @ 7 1/2"

PIPE DIAMETER INCHES	AREA SQ. FT.	MAXIMUM HEIGHT OF COVER IN FEET — SHEET THICKNESS IN INCHES (GAUGE)				MINIMUM SHEET THICKNESS FOR ENTRANCES WITH LESS THAN 1 FT. COVER INCHES (GUAGE)
		0.064 (16)	0.079 (14)	0.109 (12)	0.135 (10)	
12	0.8	18	95	100		0.064 (16)
15	1.2	18	57	78	100	0.109 (12)
18	1.8	18	40	52	65	0.135 (10)
21	2.4	18	31	39	47	
24	3.1	17	26	32	37	
27	4.0	17	24	27	31	
30	4.9	17	22	24	27	
36	7.1	16	20	21	23	
42	9.6	16	18	19	20	
48	12.6		18	18	19	
54	16.0			18	18	
60	19.6			18	18	
66	23.8				18	
72	28.3				17	

NOTES:

1. COVER HEIGHTS INDICATED IN TABLES ARE FOR FINISHED CONSTRUCTION.
2. TO PROTECT PIPE DURING CONSTRUCTION, MINIMUM HEIGHT OF COVER TO BE IN ACCORDANCE WITH TABLE A PRIOR TO ALLOWING CONSTRUCTION TRAFFIC TO CROSS INSTALLATION. THE COVER SHALL EXTEND THE FULL LENGTH OF THE PIPE. THE APPROACH FILL RAMP IS TO EXTEND A MINIMUM OF 20 DIAMETERS ON EACH SIDE OF THE PIPE, OR TO THE INTERSECTION WITH A CUT.
3. MINIMUM FINISHED HEIGHT OF COVER FOR ALL PIPES, EXCEPT THOSE UNDER ENTRANCES, SHALL BE 2'0" OR 1/2 DIAMETER, WHICHEVER IS GREATER. IN CASES IN WHICH THESE COVER HEIGHTS CANNOT BE ACHIEVED, AN ABSOLUTE MINIMUM FINISHED COVER HEIGHT OF 1.0' OR 1/4 DIAMETER, WHICHEVER IS GREATER, WILL BE ALLOWED ONLY IF ALL POSSIBLE MEANS TO OBTAIN THE STANDARD VALUE HAVE BEEN EXHAUSTED. THE MINIMUM FINISHED HEIGHT OF COVER FOR PIPES UNDER ENTRANCES IS 9" FOR PIPE DIAMETERS LESS THAN OR EQUAL TO 18" OR 12" OR 1/4 DIAMETER, WHICHEVER IS GREATER, FOR PIPE DIAMETERS GREATER THAN 18".
4. SEE STANDARD (E603-B) FOR PIPE BEDDING AND BACKFILL REQUIREMENTS.
5. THE MAXIMUM HEIGHT OF COVER SHOWN IN THE TABLES IS BASED ON A SOIL MODULUS OF 700 PSI. ALL OTHER DESIGN CRITERIA ARE IN ACCORDANCE WITH THE AASHTO SPECIFICATIONS FOR SOIL CORRUGATED METAL STRUCTURE INTERSECTION SYSTEMS.
6. 16 GAUGE PIPE LIMITED TO THOSE LOCATIONS WHERE PIPE DIAMETER PLUS COVER IS LESS THAN 20'.

TABLE A	
PIPE DIAMETER	MINIMUM COVER HEIGHT DURING CONSTRUCTION (SEE NOTE 2)
12" TO 24"	18"
30" AND OVER	EQUAL TO DIAMETER

SHEET 13 OF 18

SPECIFICATION REFERENCE: 232, 302

ALUMINUM SPIRAL RIB PIPE
HEIGHT OF COVER TABLE FOR H-20 LIVE LOAD

REV. 7/05
107.17

PC-1

STEEL SPIRAL RIB PIPE 3/4" WIDE x 3/4" RIBS SPACED @ 7 1/2"

PIPE DIAMETER INCHES	AREA SQ. FT.	MAXIMUM HEIGHT OF COVER IN FEET — SHEET THICKNESS IN INCHES (GAUGE)			MINIMUM SHEET THICKNESS FOR ENTRANCES WITH LESS THAN 1 FT. COVER INCHES (GAUGE)
		0.064 (16)	0.079 (14)	0.109 (12)	
12	D.8	18			0.064 (16)
15	1.2	18			0.064 (16)
18	1.8	18	92	130	0.064 (16)
21	2.4	18	64	88	0.079 (14)
24	3.1	17	48	65	0.109 (12)
27	4.D	17	39	50	
30	4.9	17	33	41	
36	7.1	16	26	31	
42	9.6	16	23	26	
48	12.6	15	21	23	
54	16.0	15	19	21	
60	19.6	14	19	20	
66	23.8		18	19	
72	28.3		18	18	
78	33.2			18	
84	38.6			18	

NOTES:

1. COVER HEIGHTS INDICATED IN TABLES ARE FOR FINISHED CONSTRUCTION.
2. TO PROTECT PIPE DURING CONSTRUCTION, MINIMUM HEIGHT OF COVER TO BE IN ACCORDANCE WITH TABLE A PRIOR TO ALLOWING CONSTRUCTION TRAFFIC TO CROSS INSTALLATION. THE COVER SHALL EXTEND THE FULL LENGTH OF THE PIPE. THE APPROACH FILL IS TO ETEND A MINIMUM OF 15 DIAMETERS ON EACH SIDE OF THE PIPE OR TO THE INTERSECTION WITH THE CUT.
3. MINIMUM FINISHED HEIGHT OF COVER FOR ALL PIPES, EXCEPT THOSE UNDER ENTRANCES, SHALL BE 2.0' OR 1/2 DIAMETER, WHICHEVER IS GREATER. IN CASES IN WHICH THESE COVER HEIGHTS CANNOT BE ACHIEVED, AN ABSOLUTE MINIMUM FINISHED COVER HEIGHT OF 1.0' OR 1/4 DIAMETER, WHICHEVER IS GREATER, WILL BE ALLOWED ONLY IF ALL POSSIBLE MEANS TO OBTAIN THE STANDARD VALUE HAVE BEEN EXHAUSTED. THE MINIMUM FINISHED HEIGHT OF COVER FOR PIPES UNDER ENTRANCES IS 9" FOR PIPES DIAMETER LESS THAN OR EQUAL TO 24" AND 12" OR 1/4 DIAMETER, WHICHEVER IS GREATER, FOR PIPE DIAMETERS GREATER THAN 24".
4. SEE STANDARD (E603-B) FOR PIPE BEDDING AND BACKFILL REQUIREMENTS.
5. 16 GAUGE PIPE LIMITED TO THOSE LOCATIONS WHERE PIPE DIAMETER PLUS COVER IS LESS THAN 20'.
6. THE MAXIMUM HEIGHT OF COVER SHOWN IN THE TABLES IS BASED ON A SOIL MODULUS OF 700 PSI. ALL OTHER DESIGN CRITERIA ARE IN ACCORDANCE WITH THE AASHTO SPECIFICATIONS FOR SOIL CORRUGATED METAL STRUCTURE INTERACTION SYSTEMS.
7. A MAXIMUM HEIGHT OF COVER TABLE FOR STEEL SPRIAL RIB WITH 3/4" WIDE x 1" DEEP RIPS SPACED AT 11 1/2" IS AVAILIBLE UPON REQUEST.

TABLE A	
PIPE DIAMETER	MINIMUM COVER HEIGHT DURING CONSTRUCTION (SEE NOTE 4)
12" TO 30"	18"
36" AND ABOVE	1/2 DIAMETER

SHEET 14 OF 18

STEEL SPIRAL RIB PIPE
HEIGHT OF COVER TABLE FOR H-20 LIVE LOAD

REV. 7/05
107.18

SPECIFICATION REFERENCE: 232, 302

SHEET 7 OF 9

U.S. DEPARTMENT OF TRANSPORTATION
FEDERAL HIGHWAY ADMINISTRATION
EASTERN FEDERAL LANDS HIGHWAY DIVISION

DETAIL

H-20 LIVE LOAD

REVISED:

DETAIL APPROVED FOR USE --/--/----

DETAIL E603-A

REG	STATE	PROJECT	SHEET NO.
-	VA	VA-A-AD-48(1)	S27

PC-1

CAST IRON PIPE CULVERT DESIGNATION				
DIAMETER INCHES	AREA SQ. FT.	MAXIMUM HEIGHT OF COVER IN FEET		
		1-13	14-21	22-35 (2)
12 (2)	0.8	STANDARD PIPE	HEAVY PIPE	EXTRA HEAVY PIPE
15 (3)	1.2			
16 (2) (4)	1.4			
18 (1)	1.8			
24 (1)	3.1			
30 (1)	4.9			
36 (1)	7.1			
42 (2)	9.6			
48 (2)	12.6			

(1) PIPE MAY BE SMOOTH CAST IRON, CORRUGATED CAST IRON, OR RIBBED CAST IRON.

(2) PIPE TO BE SMOOTH CAST IRON ONLY.

(3) PIPE TO BE CORRUGATEO CAST IRON OR RIBBED CAST IRON.

(4) MAY BE SUBSTITUTED FOR 15" PIPE CULVERT AT NO INCREASE IN PRICE BID FOR 15" PIPE, WHERE APPROVED BY THE ENGINEER.

(5) CRUSHING STRENGTH (LBS. PER. LIN. FT.)

NOTES:

1. MAXIMUM HEIGHT OF COVER SHOWN IN TABLE IS FOR FINISHED CONSTRUCTION.
2. TO PROTECT PIPE DURING CONSTRUCTION, MINIMUM HEIGHT OF COVER PRIOR TO ALLOWING CONSTRUCTION TRAFFIC TO CROSS INSTALLATION IS TO BE 24". THIS COVER IS TO EXTEND THE FULL LENGTH OF THE PIPE CULVERT. THE APPROACH FILL RAMP IS TO EXTEND A MINIMUM OF 10 (DIAMETER + 36") ON EACH SIDE OF THE CULVERT, OR TO THE INTERSECTION WITH A CUT.
3. MINIMUM FINISHED HEIGHT OF COVER TO BE 24", EXCEPT PIPE UNDER ENTRANCES AND MEDIAN CROSSOVERS WHERE A 9" MINIMUM WILL BE PERMITTED.
4. SEE STANDARD (E603-B) FOR PIPE BEDDING AND BACKFILL REQUIREMENTS.

SHEET 15 OF 18

SPECIFICATION REFERENCE: 232, 302

CAST IRON PIPE
HEIGHT OF COVER TABLE FOR H-20 LIVE LOAD

REV. 7/05

107.19

PC-1

POLYETHYLENE CORRUGATED PIPE (PE) (SEE NOTE 6)		
DIAMETER INCHES	AREA SQ. FT.	MAXIMUM HEIGHT OF COVER FEET
12	0.8	21
15	1.2	21
18	1.8	20
24	3.1	20
30	4.9	19
36	7.1	18
42	7.1	18
48	7.1	17

POLYVINYLCHLORIDE RIBBED PIPE (PVC)		
DIAMETER INCHES	AREA SQ. FT.	MAXIMUM HEIGHT OF COVER FEET
18	1.7	20
21	2.3	19
24	3.0	19
30	4.7	18
36	6.9	18
48	12.3	18

NOTES:

1. COVER HEIGHTS INDICATED IN TABLES ARE FOR FINISHED CONSTRUCTION.
2. TO PROTECT PIPE DURING CONSTRUCTION, MINIMUM HEIGHT OF COVER TO BE IN ACCORDANCE WITH TABLE A PRIOR TO ALLOWING CONSTRUCTION TRAFFIC TO CROSS INSTALLATION. THE COVER SHALL EXTEND THE FULL LENGTH OF THE PIPE. THE APPROACH FILL IS TO EXTENO A MINIMUM OF 10(DIAMETER + 1/2 DIAMETER) ON EACH SIDE OF THE PIPE OR TO THE INTERSECTION WITH A CUT.
3. STANDARD MINIMUM FINISHED HEIGHT OF COVER FOR ALL PIPES, EXCEPT THOSE UNDER ENTRANCES, SHALL BE 2.0' OR 1/2 DIAMETER WHICHEVER IS GREATER. IN CASES IN WHICH THESE COVER HEIGHTS CANNOT BE ACHIEVED, AN ABSOLUTE MINIMUM FINISHED COVER HEIGHT OF 1.0' OR 1/8 DIAMETER WHICHEVER IS GREATER WILL BE ALLOWED ONLY IF ALL POSSIBLE MEANS TO OBTAIN THE STANDARD VALUE HAVE BEEN EXHAUSTED. THE MINIMUM FINISHED HEIGHT OF COVER FOR PIPES UNDER ENTRANCES IS 9" FOR PIPE DIAMETERS LESS THAN OR EQUAL TO 24" AND 12" OR 1/8 DIAMETER, WHICHEVER IS GREATER, FOR PIPE DIAMETERS GREATER THAN 24". WHERE THE SURFACE OVER THE TOP OF THE PIPE WILL BE ASPHALT, A MINIMUM OF 6" OF CLASS I BACKFILL MATERIAL IS TO BE PLACED BETWEEN THE TOP OF THE PIPE AND THE BOTTOM OF THE ASPHALT.
4. SEE STANDARD (E603-B) FOR PIPE BEDDING AND BACKFILL REQUIREMENTS.
5. THE MAXIMUM HEIGHT OF COVER SHOWN IN THE TABLES IS BASED ON A SOIL MODULUS OF 700 PSI. ALL OTHER DESIGN CRITERIA ARE IN ACCORDANCE WITH THE AASHTO SPECIFICATIONS FOR SOIL THERMOPLASTIC PIPE INTERACTION SYSTEMS.
6. HEIGHT OF COVER VALUES FOR 12" TO 36" DIAMETER APPLY TO TYPE C OR S. HEIGHT OF COVER VALUES FOR 42" AND 48" APPLY TO TYPE S ONLY.

TABLE A	
PIPE DIAMETER	MINIMUM COVER HEIGHT DURING CONSTRUCTION (SEE NOTE 4)
12" TO 30"	18"
36" AND ABOVE	1/2 DIAMETER

PLASTIC PIPE

EXTRA STRENGTH CLAY PIPE		
DIAMETER INCHES	AREA SQ. FT.	MAXIMUM HEIGHT OF COVER FEET
12	0.8	19
15	1.2	15
18	1.8	15
21	2.4	15
24	3.1	15
30	4.9	13
36	7.1	13

NOTES:

1. ALL VITRIFIED CLAY PIPE IS TO BE EXTRA STRENGTH.
2. MAXIMUM HEIGHTS OF COVER SHOWN IN TABLE ARE FOR FINISHED CONSTRUCTION.
3. TO PROTECT PIPE DURING CONSTRUCTION, MINIMUM HEIGHT OF COVER PRIOR TO ALLOWING CONSTRUCTION TRAFFIC TO CROSS INSTALLATION IS TO BE 36". THIS COVER IS TO EXTEND THE FULL LENGTH OF THE PIPE. THE APPROACH FILL RAMP IS TO EXTEND A MINIMUM OF (10(DIAMETER + 36")) ON EACH SIDE OF THE PIPE, OR TO THE INTERSECTION WITH A CUT.
4. MINIMUM FINISHED HEIGHT OF COVER TO BE 24", EXCEPT PIPE UNDER ENTRANCES WHERE A 9" MINIMUM WILL BE PERMITTED.
5. SEE STANDARD (E603-B) FOR PIPE BEDDING AND BACKFILL REQUIRMENTS.

VITRIFIED CLAY

SHEET 16 OF 18

VITRIFIED CLAY AND PLASTIC PIPE
HEIGHT OF COVER TABLES FOR H-20 LIVE LOAD

REV. 9/06

107.20

SPECIFICATION REFERENCE: 232, 302

SHEET 8 OF 9

U.S. DEPARTMENT OF TRANSPORTATION
FEDERAL HIGHWAY ADMINISTRATION
EASTERN FEDERAL LANDS HIGHWAY DIVISION

DETAIL

H-20 LIVE LOAD

REVISED: DETAIL APPROVED FOR USE --/----

DETAIL E603-A

REG	STATE	PROJECT	SHEET NO.
-	VA	VA-A-AD-48(1)	S28

PC-1

TABLE A - ALLOWABLE TYPE OF PIPE CULVERT

FOR ROADWAYS THAT ARE CONSTRUCTED, FUNDED OR WILL ULTIMATELY BE MAINTAINED BY VDOT

FUNCTIONAL CLASSIFICATION OF ROADS SYSTEM UNDER WHICH PIPE IS TO BE INSTALLED					
	HIGHER FUNCTIONAL CLASS - HFC RURAL PRINCIPAL ARTERIAL, URBAN PRINCIPAL ARTERIAL, RURAL MINOR ARTERIAL, URBAN MINOR ARTERIAL, RURAL COLLECTOR ROADS, URBAN COLLECTOR STREETS, SUBDIVISION STREETS WITH AN ADT GREATER THAN 4000		LOWER FUNCTIONAL CLASS - LFC RURAL LOCAL ROADS, URBAN LOCAL STREETS, SUBDIVISION STREETS WITH AN ADT LESS THAN OR EQUAL TO 4000		ENTRANCE PIPE
ALLOWABLE PIPE CULVERTS NOTES 1 & 2	STATEWIDE EXCEPT LOCATIONS SHOWN IN TABLE B	LOCATION SHOWN IN TABLE B	STATEWIDE EXCEPT LOCATIONS SHOWN IN TABLE B	LOCATION SHOWN IN TABLE B	STATEWIDE
CONCRETE	✓	✓	✓	✓	✓
ALUMINUM COATED TYPE 2 CORRUGATED STEEL NOTE 3	✓		✓		✓
POLYMER COATED (10/10) CORRUGATED STEEL NOTE 3	✓	✓	✓	✓	✓
UNCOATED GALVANIZED CORRUGATED STEEL NOTES 3 & 4					✓
GALVANIZED STEEL STRUCTURAL PLATE NOTE 3			✓		✓
GALVANIZED STEEL STRUCTURAL PLATE WITH CONCRETE INVERT NOTE 3	✓		✓	✓	✓
CORRUGATED ALUMINUM ALLOY NOTE 3	✓	✓	✓	✓	✓
CORRUGATED ALUMINUM ALLOY STRUCTUAL PLATE NOTE 3	✓	✓	✓	✓	✓
POLYVINYLCHLORIDE (PVC) RIBBED PIPE (SMOOTH INTERIOR)	✓	✓	✓	✓	✓
POLYETHYLENE (PE) CORRUGATED TYPE C	✓	✓	✓	✓	
POLYETHYLENE (PE) CORRUGATED TYPE S	✓	✓	✓	✓	✓

NOTES:

1. ALLOWABLE TYPES OF PIPES FOR A SPECIFIC AREA ARE TO CONFORM TO THE CRITERIA SHOWN IN TABLES A, A1, B, AND C. ANY DEVIATION MUST BE APPROVED BY THE STATE LOCATION AND DESIGN ENGINEER AND THE DISTRICT MATERIALS ENGINEER.
2. SEE HEIGHT OF COVER TABLES FOR MINIMUM AND MAXIMUM COVER LIMITATIONS FOR EACH TYPE OF PIPE.
3. SEE TABLE C FOR MINIMUM AND MAXIMUM pH, RESISTIVITY, AND VELOCITY LIMITATIONS FOR METAL PIPES.
4. USE ONLY UNDER ENTRANCES WHERE THE PIPE SIZE IS LESS THAN OR EQUAL TO 30" DIAMETER (OR EQUIVALENT) AND THE HEIGHT OF COVER IS LESS THAN OR EQUAL TO 15' AND AS AN OUTLET PIPE FOR STANDARD DI-13 SHOULDER SLOT INLETS.

SHEET 17 OF 18

SPECIFICATION REFERENCE: 302, 232

ALLOWABLE PIPE CRITERIA FOR CULVERTS AND STORM SEWERS

REV. 9/06

107.20A

PC-1

TABLE A1 - ALLOWABLE TYPE OF STORM SEWER PIPE

FOR ROADWAYS THAT ARE CONSTRUCTED, FUNDED OR WILL ULTIMATELY BE MAINTAINED BY VDOT

FUNCTIONAL CLASSIFICATION OF ROADS SYSTEM UNDER WHICH PIPE IS TO BE INSTALLED			
	HIGHER FUNCTIONAL CLASS - HFC RURAL PRINCIPAL ARTERIAL, URBAN PRINCIPAL ARTERIAL, RURAL MINOR ARTERIAL, URBAN MINOR ARTERIAL, RURAL COLLECTOR ROADS, URBAN COLLECTOR STREETS, SUBDIVISION STREETS WITH AN ADT GREATER THAN 4000	LOWER FUNCTIONAL CLASS - LFC RURAL LOCAL ROADS, URBAN LOCAL STREETS, SUBDIVISION STREETS WITH AN ADT LESS THAN OR EQUAL TO 4000	
ALLOWABLE PIPE CULVERTS NOTES 1 & 2	STATEWIDE	STATEWIDE EXCEPT LOCATIONS SHOWN IN TABLE B	LOCATION SHOWN IN TABLE B
CONCRETE	✓	✓	✓
CORRUGATED STEEL ALUMINUM COATED TYPE 2 FULLY CONCRETE LINED NOTE 3		✓	
ALUMINUM COATED TYPE 2 STEEL SPIRAL RIB NOTE 3		✓	
POLYMER COATED (10/10) CORRUGATED STEEL SPIRAL RIB NOTE 3		✓	✓
POLYMER COATED (10/10) CORRUGATED STEEL DOUBLE WALL (SMOOTH INTERIOR) NOTE 3		✓	✓
ALUMINUM SPIRAL RIB NOTE 3		✓	✓
POLYVINYLCHLORIDE (PVC) RIBBED PIPE (SMOOTH INTERIOR)		✓	✓
POLYETHYLENE (PE) CORRUGATED TYPE S		✓	✓

TABLE B

EXCEPTIONS TO STATEWIDE APPLICATIONS

COUNTIES (INCLUDING TOWNS)				CITIES	
ARLINGTON - EAST OF AND INCLUDING RTES. 95 & 395		SURRY - EAST OF AND INCLUDING RTE. 10		SUFFOLK - EAST OF AND INCLUDING RTE. 32	
FAIRFAX - EAST OF AND INCLUDING RTES. 95 & 395		ISLE OF WIGHT - EAST OF AND INCLUDING RTE. 10		CHESAPEAKE	WILLIAMSBURG
PRINCE WILLIAM - EAST OF AND INCLUDING RTES. 95 & 395				VIRGINIA BEACH	POQUOSON
WESTMORELAND	JAMES CITY	ESSEX	NORTHAMPTON	HAMPTON	PORTSMOUTH
LANCASTER	ACCOMACK	MIDDLESEX	STAFFORD	NEWPORT NEWS	
MATTHEWS	SPOTSYLVANIA	YORK	KING GEORGE	NORFOLK	
GLOUCESTER	NORTHUMBERLAND	RICHMOND		ALEXANDRIA	
				FREDERICKSBURG	

TABLE C

PIPE TYPE	ALLOWABLE pH RANGE (SEE NOTE 6)		ALLOWABLE RESISTIVITY RANGE		ALLOWABLE VELOCITY (FPS) (SEE NOTE 5)
	MIN.	MAX.	MIN.	MAX.	MAXIMUM
ALUMINUM COATED TYPE 2 CORRUGATED STEEL	5.0	9.0	1500	-	5
GALVANIZED STEEL - STRUCTURAL PLATE WITH CONCRETE INVERT	6.0	9.0	2000	10000	15
GALVANIZED STEEL STRUCTURAL PLATE	6.0	9.0	2000	7000	5
POLYMER COATED (10/10) CORRUGATED STEEL	4.0	9.0	750	-	15
UNCOATED GALVANIZED CORRUGATED STEEL	6.0	10.0	2000	7000	5
CORRUGATED ALUMINUM ALLOY	4.0	9.0	500	-	5
CORRUGATED ALUMINUM ALLOY STRUCTURAL PLATE	4.0	9.0	500	-	5
ALUMINUM SPIRAL RIB	4.0	9.0	500	-	5
ALUMINUM COATED TYPE 2 SPIRAL RIB	5.0	9.0	1500	-	5
CORRUGATED STEEL ALUMINUM COATED TYPE 2 FULLY CONCRETE LINED	5.0	9.0	1500	-	15
POLYMER COATED CORRUGATED STEEL SPIRAL RIB	4.0	9.0	750	-	15
POLYMER COATED CORRUGATED STEEL DOUBLE WALL	4.0	9.0	750	-	15

NOTES:

1. ALLOWABLE TYPES OF PIPES FOR A SPECIFIC AREA ARE TO CONFORM TO THE CRITERIA SHOWN IN TABLES A, A1, B, AND C. ANY DEVIATION MUST BE APPROVED BY THE STATE LOCATION AND DESIGN ENGINEER AND THE DISTRICT MATERIALS ENGINEER.
2. SEE HEIGHT OF COVER TABLES FOR MINIMUM AND MAXIMUM COVER LIMITATIONS FOR EACH TYPE OF PIPE.
3. SEE TABLE C FOR MINIMUM AND MAXIMUM pH, RESISTIVITY, AND VELOCITY LIMITATIONS FOR METAL PIPES.
4. USE ONLY UNDER ENTRANCES WHERE THE PIPE SIZE IS LESS THAN OR EQUAL TO 30" DIAMETER (OR EQUIVALENT) AND THE HEIGHT OF COVER IS LESS THAN OR EQUAL TO 15' AND AS AN OUTLET PIPE FOR STANDARD DI-13 SHOULDER SLOT INLETS.
5. ALLOWABLE VELOCITY WHERE ABRASIVE BEDLOAD IS PRESENT OR ANTICIPATED. MAXIMUM VELOCITY BASED ON 10 YEAR DESIGN DISCHARGE (Q).
6. pH VALUES APPLY TO BOTH THE SOIL AND WATER.

SHEET 18 OF 18

SPECIFICATION REFERENCE: 302, 232

ALLOWABLE PIPE CRITERIA FOR CULVERTS AND STORM SEWERS

REV. 9/06

107.21

SHEET 9 OF 9

U.S. DEPARTMENT OF TRANSPORTATION
FEDERAL HIGHWAY ADMINISTRATION
EASTERN FEDERAL LANDS HIGHWAY DIVISION

DETAIL

H-20 LIVE LOAD

DETAIL APPROVED FOR USE ---/----

REVISED:

DETAIL E603-A

REG	STATE	PROJECT	SHEET NO.
-	VA	VA-A-AD-48(1)	S29

PB-1

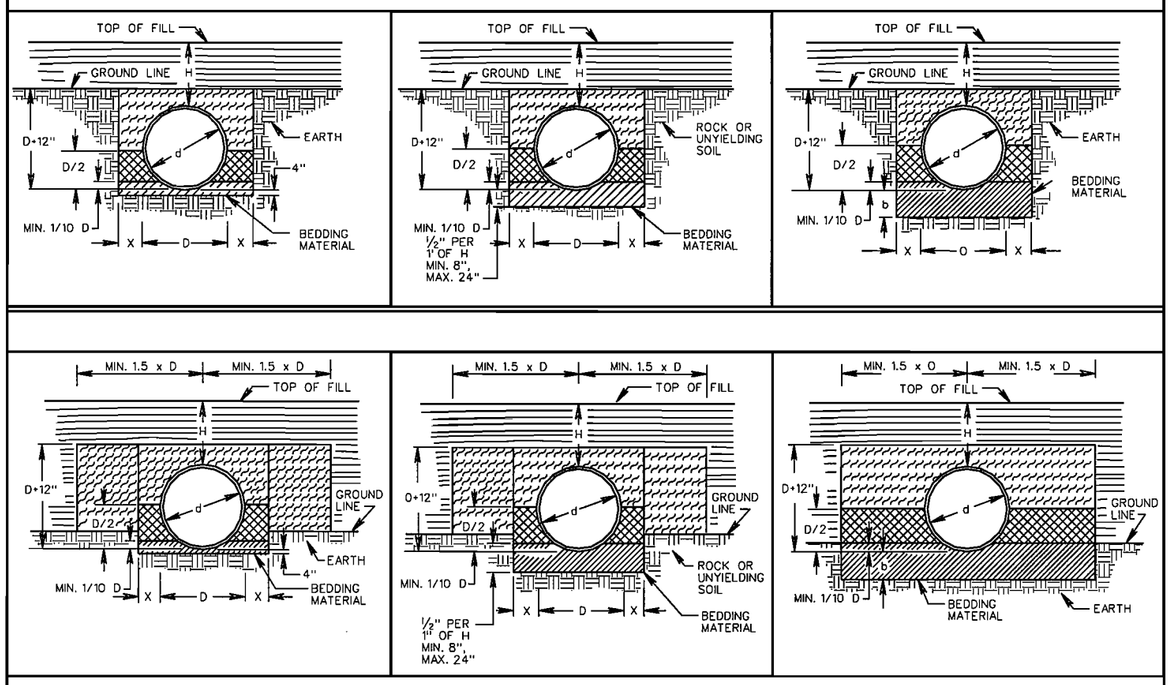

PLACE CRUSHER RUN AGGREGATE BEDDING MATERIAL IN ACCORDANCE WITH SECTION 704.09 SPECIFICATIONS.

PLACE BACKFILL CONSISTING OF CRUSHER RUN AGGREGATE PER SECTION 704.09 SPECIFICATIONS. FLOWABLE BACKFILL OR COMPACTED SOILS CONFORMING TO SECTION 704.03 SPECIFICATIONS.

REGULAR BACKFILL MATERIAL IN ACCORDANCE WITH SECTION 704.06 SPECIFICATIONS.

EMBANKMENT

NOTES:

CRUSHED GLASS CONFORMING TO THE SIZE REQUIREMENTS FOR CRUSHER RUN AGGREGATE PER SECTION 704.09 MAY BE USED IN PLACE OF BACKFILL.

SHEET 1 OF 4

SPECIFICATION REFERENCE
302
303

INSTALLATION OF PIPE CULVERTS AND STORM SEWERS
CIRCULAR PIPE BEDDING AND BACKFILL - METHOD "A"

REV 8/07

107.01

PB-1

NO PROJECTION OF PIPE ABOVE GROUND LINE

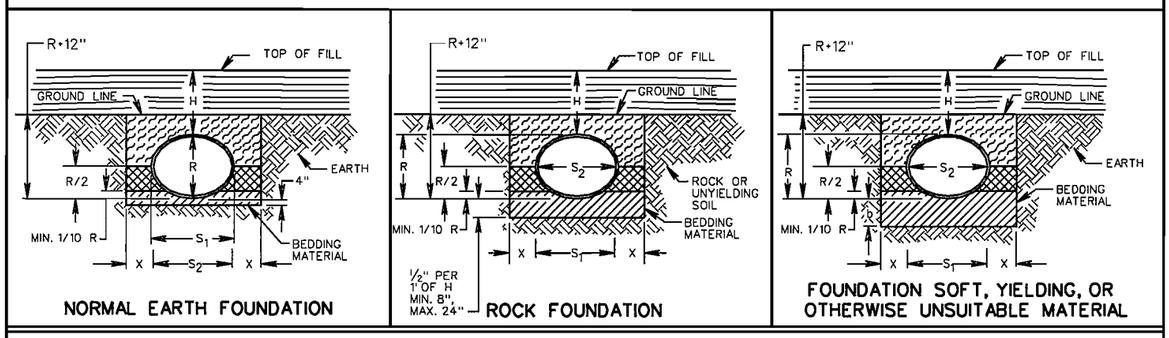

NORMAL EARTH FOUNDATION

ROCK FOUNDATION

FOUNDATION SOFT, YIELDING, OR OTHERWISE UNSUITABLE MATERIAL

PIPE PROJECTION ABOVE GROUND LINE

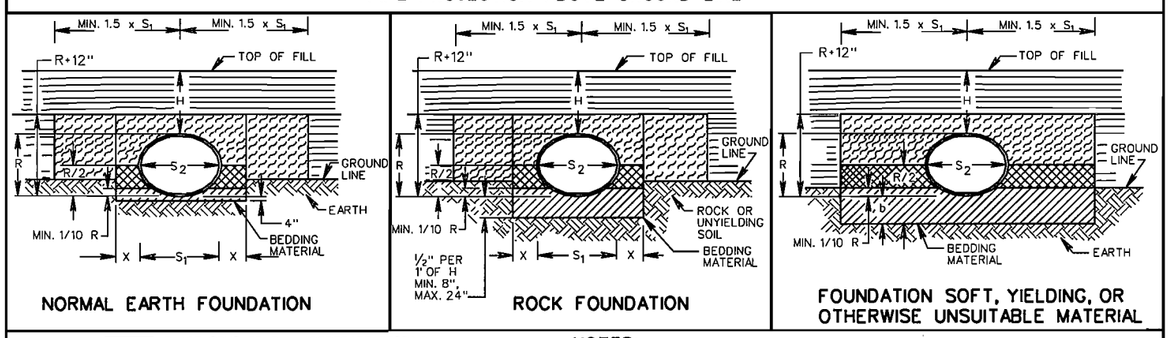

NORMAL EARTH FOUNDATION

ROCK FOUNDATION

FOUNDATION SOFT, YIELDING, OR OTHERWISE UNSUITABLE MATERIAL

PLACE CRUSHER RUN AGGREGATE BEDDING MATERIAL IN ACCORDANCE WITH SECTION 704.09 SPECIFICATIONS.

PLACE BACKFILL CONSISTING OF CRUSHER RUN AGGREGATE PER SECTION 704.09 SPECIFICATIONS. FLOWABLE BACKFILL OR COMPACTED SOILS CONFORMING TO SECTION 704.03 SPECIFICATIONS.

REGULAR BACKFILL MATERIAL IN ACCORDANCE WITH SECTION 704.06 SPECIFICATIONS.

EMBANKMENT

NOTES:

CRUSHED GLASS CONFORMING TO THE SIZE REQUIREMENTS FOR CRUSHER RUN AGGREGATE PER SECTION 704.09 MAY BE USED IN PLACE OF BACKFILL.

SHEET 2 OF 4

INSTALLATION OF PIPE CULVERTS AND STORM SEWERS
ELLIPTICAL PIPE BEDDING AND BACKFILL - METHOD "A"

REF 8/07

107.02

SPECIFICATION REFERENCE
302
303

U.S. DEPARTMENT OF TRANSPORTATION
FEDERAL HIGHWAY ADMINISTRATION
EASTERN FEDERAL LANDS HIGHWAY DIVISION

DETAIL

PIPE CULVERTS
BEDDING AND BACKFILL

DETAIL APPROVED FOR USE ---/----

REVISED:

DETAIL E603-B

SHEET 1 OF 2

REG	STATE	PROJECT	SHEET NO.
-	VA	VA-A-AD-48(1)	S30

PB-1

NO PROJECTION OF PIPE ARCH ABOVE GROUND LINE

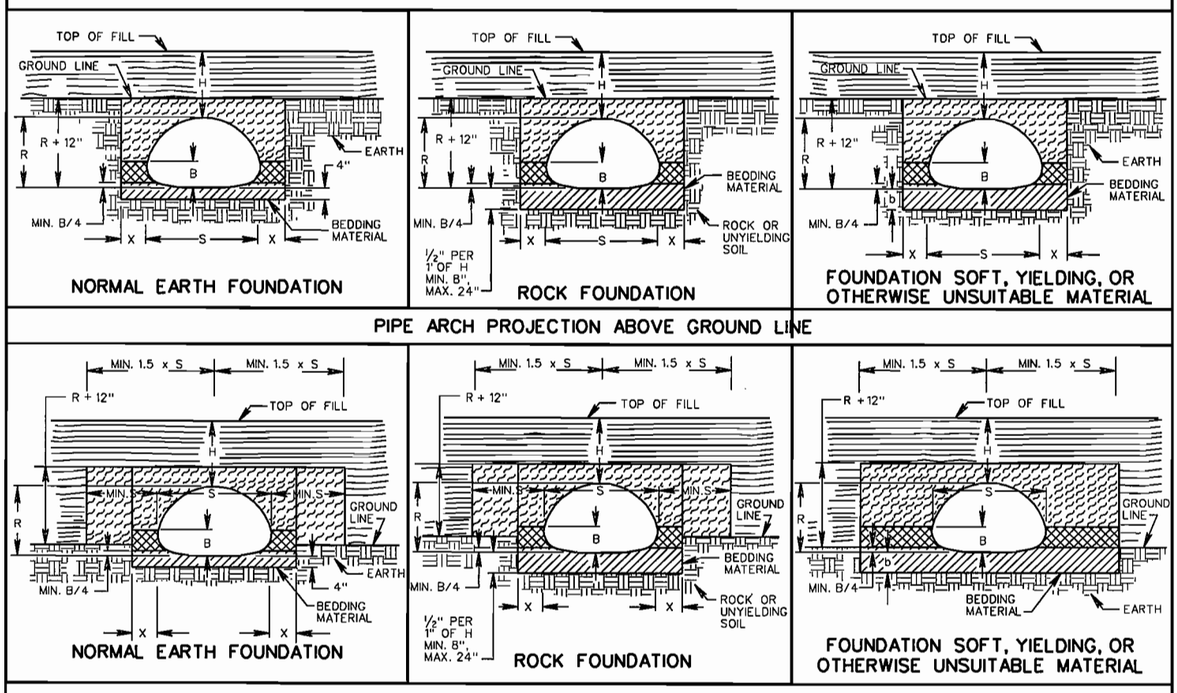

BEDDING MATERIAL IN ACCORDANCE WITH SECTION 302 OF THE ROAD AND BRIDGE SPECIFICATIONS.

CLASS I BACKFILL MATERIAL IN ACCORDANCE WITH SECTION 302 OF THE ROAD AND BRIDGE SPECIFICATIONS.

REGULAR BACKFILL MATERIAL IN ACCORDANCE WITH SECTION 302 OF THE ROAD AND BRIDGE SPECIFICATIONS.

EMBANKMENT

NOTE:

FOR GENREAL NOTES ON PIPE BEDDING, SEE INSTALLATION OF PIPE CULVERTS AND STORM SEWERS GENERAL NOTES ON SHEET 107.00.

CRUSHED GLASS CONFORMING TO THE SIZE REQUIREMENTS FOR CRUSHER RUN AGGREGATE SIZE 25 AND 26 MAY BE USED IN PLACE OF CLASS I BACKFILL.

SHEET 3 of 4

SPECIFICATION REFERENCE
302
303

INSTALLATION OF PIPE CULVERTS AND STORM SEWERS
PIPE ARCH BEDDING AND BACKFILL

REV 8/07

107.03

PB-1

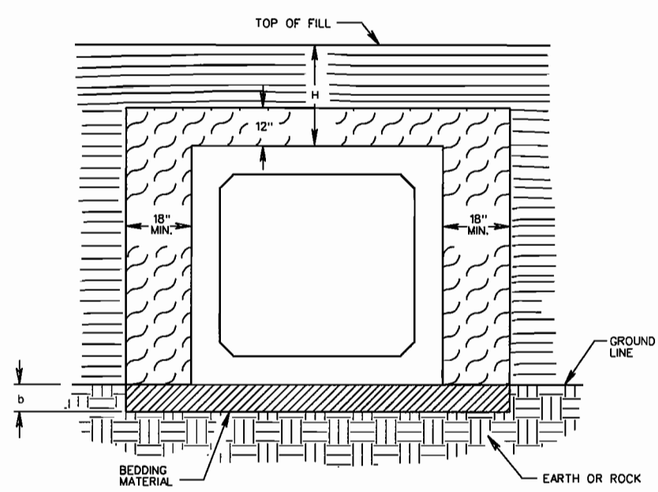

H = HEIGHT OF COVER MEASURED FROM TOP OF CULVERT TO FINISHED GRADE.

FOR NORMAL EARTH FOUNDATION:
FOR PRECAST AND CAST IN PLACE BOX CULVERT b = 6"

FOR ROCK FOUNDATION:
FOR PRECAST BOX CULVERT b = 1/4" PER 12" OF H - 8" MIN., 24" MAX.
FOR CAST IN PLACE BOX CULVERT b=DEPTH AS SHOWN ON PLANS OR WHERE NO BEDDING IS SPECIFIED BOTTOM SLAB TO BE KEYED INTO EXISTING ROCK FOUNDATION.
FOR SOFT, YIELDING OR OTHERWISE UNSUITABLE FOUNDATION:
FOR PRECAST AND CAST IN PLACE BOX CULVERT
b = DEPTH AS SHOWN ON PLANS OR TO FIRM BEARING SOIL.

BEDDING MATERIAL IN ACCORDANCE WITH SECTION 302 OF THE ROAD AND BRIDGE SPECIFICATIONS.

REGULAR BACKFILL MATERIAL IN ACCORDANCE WITH SECTION 302 OF THE ROAD AND BRIDGE SPECIFICATIONS.

EMBANKMENT

SHEET 4 OF 4

INSTALLATION OF BOX CULVERTS
BEDDING AND BACKFILL - METHOD "A"

REV. 1/04

107.04

SPECIFICATION REFERENCE
302
303

U.S. DEPARTMENT OF TRANSPORTATION
FEDERAL HIGHWAY ADMINISTRATION
EASTERN FEDERAL LANDS HIGHWAY DIVISION

DETAIL

PIPE CULVERTS
BEDDING AND BACKFILL

DETAIL APPROVED FOR USE ---/----

REVISED:

DETAIL E603-B

REG	STATE	PROJECT	SHEET NO.
-	VA	VA-A-AD-48(1)	S31

REG	STATE	PROJECT	SHEET NO.
-	VA	VA-A-AD-48(1)	S32

STORMWATER MANAGEMENT DETAILS

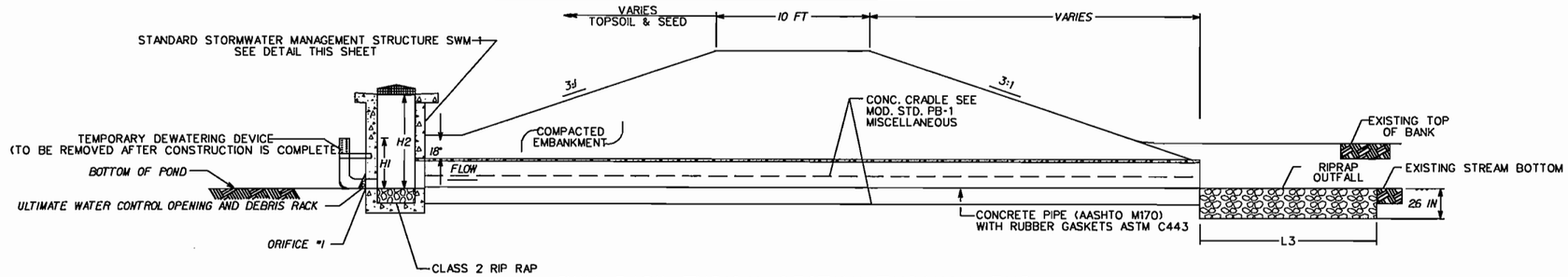

SWM BASIN TYPICAL SECTION THROUGH EMBANKMENT

(N.T.S.)

NOTE: SWM EMBANKMENT TO BE CONSTRUCTED AND COMPACTED IN ACCORDANCE WITH FP-03.

THE FOUNDATION MATERIAL UNDER THE DAM AND THE MATERIAL USED FOR THE EMBANKMENT OF THE DAM SHALL BE TYPE A-4 OR FINER, IN ACCORDANCE WITH AASHTO CLASSIFICATION SYSTEM (M145). THE BACKFILL AND EMBANKMENT MATERIAL MUST MEET THE ABOVE SOIL CLASSIFICATION OR THE DESIGN OF THE DAM MUST INCORPORATE A CUTOFF TRENCH. THE CUTOFF TRENCH SHALL BE INSTALLED ALONG EMBANKMENT CENTERLINES TO LIMIT SEEPAGE. THE TRENCH SHALL BE AT LEAST 8 FEET IN WIDTH, AND A MINIMUM 2 FEET DEEP, AND EXTEND INTO LOW PERMEABILITY SOIL OR WEATHERED ROCK. MATERIAL CONSIDERED SUITABLE FOR USE AS EMBANKMENT OR CUTOFF TRENCH MATERIAL IS GENERALLY EXPECTED ON POND SITES. OUTLET PIPES FOR SWMBS SHALL BE INSTALLED IN ACCORDANCE WITH THE MODIFIED PB-1 ST'D. DETAIL.

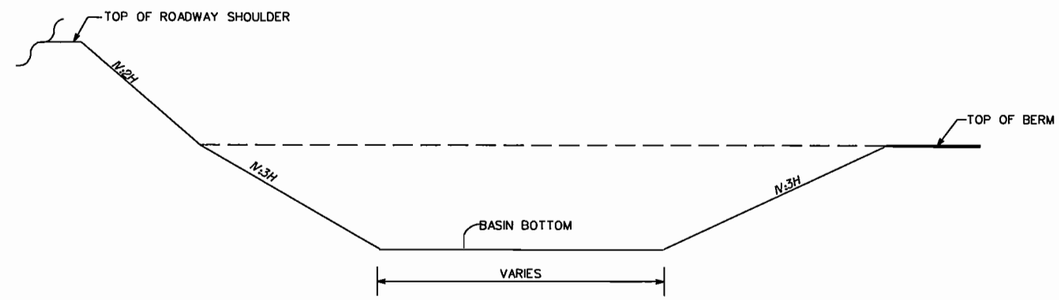

TYPICAL SECTION SWM BASINS

(N.T.S.)

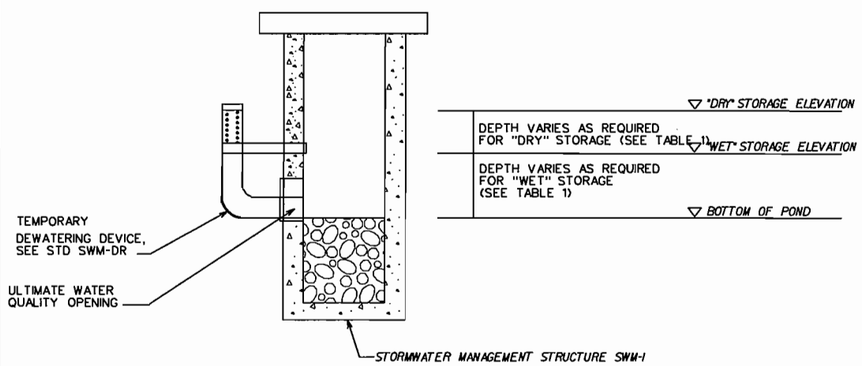

SIDE VIEW

NOTE: PATCH ANY HOLES REMAINING AFTER REMOVAL OF TEMPORARY METAL PLATES (TYP)

*DRAINAGE TUBING SHALL COMPLY WITH ASTM F667 AND AASHTO M294

TYPICAL SEDIMENT BASIN DEWATERING SYSTEM

(N.T.S.)

** SEE PLAN SHEET FOR LOCATION
N/A DENOTES NOT APPLICABLE

TABLE I

SWM BASIN AND SEDIMENT BASIN DATA

BASIN NO.	STRUCTURE NO.	RISER PIPE							OUTFALL PIPE DIAMETER	FLOW-ABLE FILL	DEWATERING DEVICE		TOP OF PRINCIPLE SPILLWAY ELEVATION	SILTATION CONTROL EXCAVATION
		ORIFICE I		WEIR DIMEN.			H1	H2			WET STORAGE ELEVATION	DRY STORAGE ELEVATION		
		D	INV.	L	H	ELEV.								
UNIT		in.	ft.	in.	in.	ft.	ft.	ft.	in.	cy	ft.	ft.	ft.	CY
1	D1-7	3	27.5				1.00	1.5	14"x23"	8.37	32.51	33.55	32.5	890
2	D4-9	2	94.00	12	6	96.1	0.69	3.50	18"	3.24	94.37	94.76	97.50	257
6	D8-10	2	129.00	12	6	131.5	1.42	3.60	24"	3.72	130.00	131.00	132.7	128
7	D11-11	2.5	59.25				0.73	2.55	18"	6.03	59.67	60.30	61.80	702
B-1		4	105.6				1.50	2.60	18"		105.50	106.60	109.00	562

U.S. DEPARTMENT OF TRANSPORTATION
FEDERAL HIGHWAY ADMINISTRATION
EASTERN FEDERAL LANDS HIGHWAY DIVISION

DETAIL

STORMWATER MANAGEMENT

DETAIL APPROVED FOR USE --/----

REVISED:

DETAIL
E603-C

6/16/2008 10:27:59 AM C:\PWworking\PITT\dms8108\Detail_SWM_2.dgn

REG	STATE	PROJECT	SHEET NO.
-	VA	VA-A-AD-48(1)	S33

SWM-DR

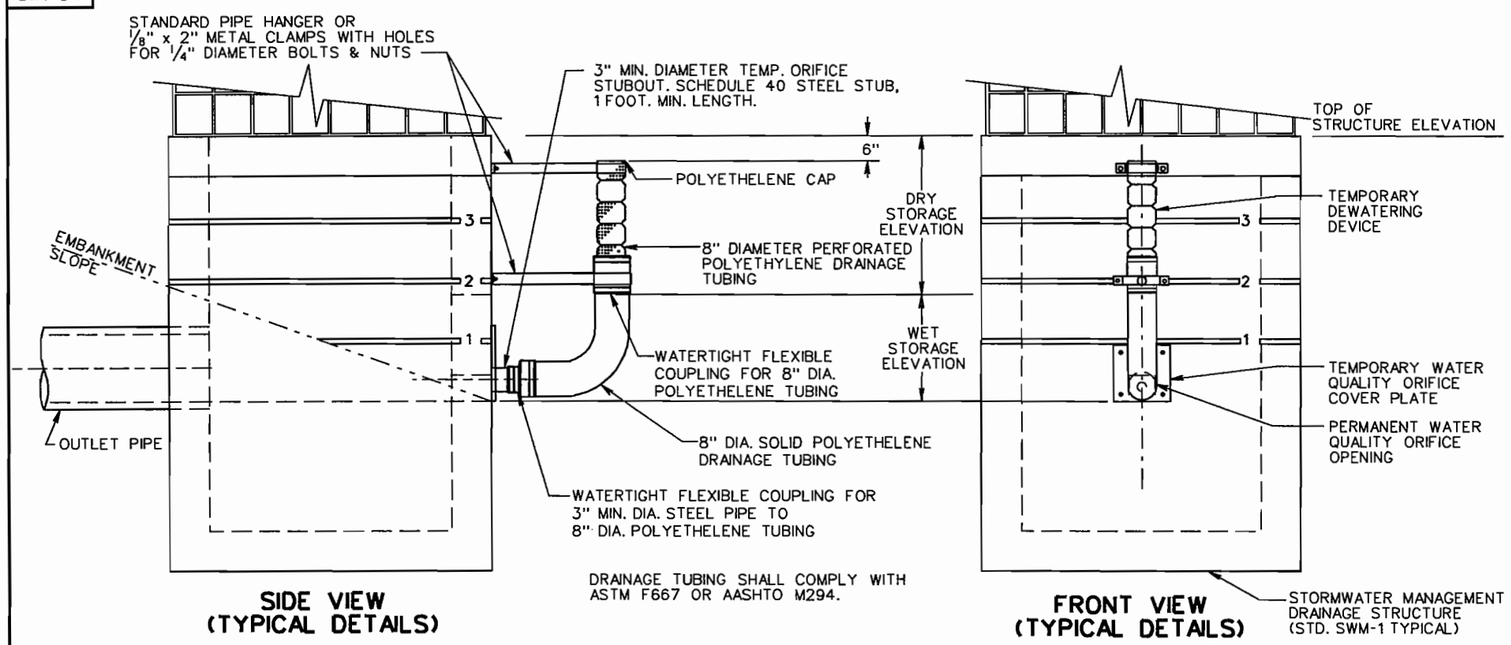

NOTES:

1. THESE DETAILS ARE TO BE USED TO MODIFY THE PERMANENT STORMWATER MANAGEMENT DRAINAGE STRUCTURE WHERE THE STORMWATER MANAGEMENT BASIN IS TO BE USED FOR A TEMPORARY SEDIMENT BASIN DURING PROJECT CONSTRUCTION.
2. GRADE STORMWATER MANAGEMENT BASIN AS SHOWN IN PLANS.
3. ALL OPENINGS (IF ANY) IN SIDE OF STRUCTURE (OTHER THAN PERMANENT WATER QUALITY ORIFICE) ARE TO BE COVERED WITH SOLID METAL PLATES WHILE THE BASIN IS BEING USED FOR SEDIMENT CONTROL.
4. DEWATERING DEVICE AND COMPONENTS AND TEMPORARY METAL PLATES (IF ANY), AS SHOWN IN THE DETAIL, ARE TO BE REMOVED AND PERMANENT STEEL PLATE WITH WATER QUALITY ORIFICE IS TO BE INSTALLED WHEN BASIN IS NO LONGER NEEDED FOR SEDIMENT CONTROL.
5. SIMILAR DEVICE MAY ALSO BE USED ON OTHER STORMWATER MANAGEMENT DRAINAGE STRUCTURES.
6. COST OF TEMPORARY DEWATERING DEVICE AND TEMPORARY METAL PLATES (IF ANY) SHALL BE INCLUDED IN THE BID PRICE FOR STORMWATER MANAGEMENT DRAINAGE STRUCTURE.
7. THE TEMPORARY 8" DIA. POLYETHELENE DRAINAGE TUBING IS TO BE SOLID FOR THE LENGTH BELOW WET STORAGE ELEVATION AND IS TO BE PERFORATED ABOVE THE WET STORAGE ELEVATION. THE COUPLING IS TO BE WATERTIGHT.
8. ALL SWM BASINS DESIGNATED FOR USE AS TEMPORARY SEDIMENT BASINS SHALL BE CONSTRUCTED DURING THE INITIAL PHASE OF EARTH MOVING ACTIVITIES. DURING PROJECT CONSTRUCTION, THE SWM DRAINAGE STRUCTURE OF OTHER CONTROL STRUCTURE SHALL BE MODIFIED IN ACCORDANCE WITH THE STANDARD DRAWINGS OR PLAN DETAILS IN ORDER TO PROVIDE A TEMPORARY SEDIMENT BASIN WITH BOTH A "WET" STORAGE VOLUME (PERMANENT POOL) AND A "DRY" STORAGE VOLUME. SEDIMENT ACCUMULATED IN THE BASIN SHALL BE REMOVED WHEN THE VOLUME OF THE "WET" STORAGE (PERMANENT POOL) HAS BEEN REDUCED BY APPROXIMATELY 50%. SEDIMENT SHALL BE DISPOSED OF AS APPROVED OR DIRECTED BY THE CO.

SHEET 1 OF 5

REV. 3/03

116.04

STORMWATER MANAGEMENT (SWM) DETAILS

SPECIFICATION REFERENCE

302

SHEET 1 OF 5

U.S. DEPARTMENT OF TRANSPORTATION
FEDERAL HIGHWAY ADMINISTRATION
EASTERN FEDERAL LANDS HIGHWAY DIVISION

DETAIL

STORMWATER MANAGEMENT (SWM) DETAILS

DETAIL APPROVED FOR USE --/----

REVISED:

DETAIL E603-D

6/16/2008 10:29:30 AM C:\PWworking\PFTT\dms8108\Detail_SWM-D1.dgn

REG	STATE	PROJECT	SHEET NO.
-	VA	VA-A-AD-4B(1)	S34

SWM-DR

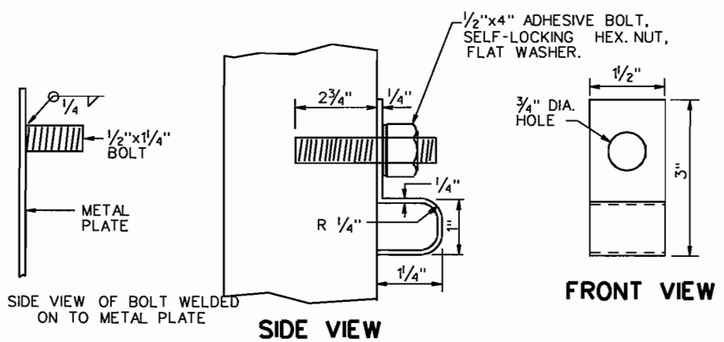

DETAIL FOR DEBRIS RACK HOLDER

1. COST OF DEBRIS RACK, METAL PLATE, AND DEBRIS RACK HOLDER TO BE INCLUDED IN THE BID PRICE FOR THE SWM DRAINAGE STRUCTURE.
2. DEBRIS RACK MAY BE FABRICATED FROM WELDED 3/8" DIAMETER BARS OR 1/2" THICK HIGH DENSITY POLYETHYLENE. METAL COMPONENTS OF DEBRIS RACK MUST NOT BE GALVANIZED.
3. DEBRIS RACK TO BE HINGED AS SHOWN OR CONTRACTOR MAY SUBSTITUTE A COMPARABLE DESIGN AS APPROVED BY THE ENGINEER.
4. THE LOCATION OF THE DEBRIS RACK HOLDER MAY BE ADJUSTED FOR VARIABLE CONDITIONS. WHEN HOLDER BOLT IS LOCATED ON THE METAL PLATE THE 1/2" DIA. BOLT LENGTH IS TO BE REDUCED 1/4 LG. AND WELDED TO THE PLATE. DEBRIS RACK HOLDER AND ALL HARDWARE IS TO BE GALVINIZED.

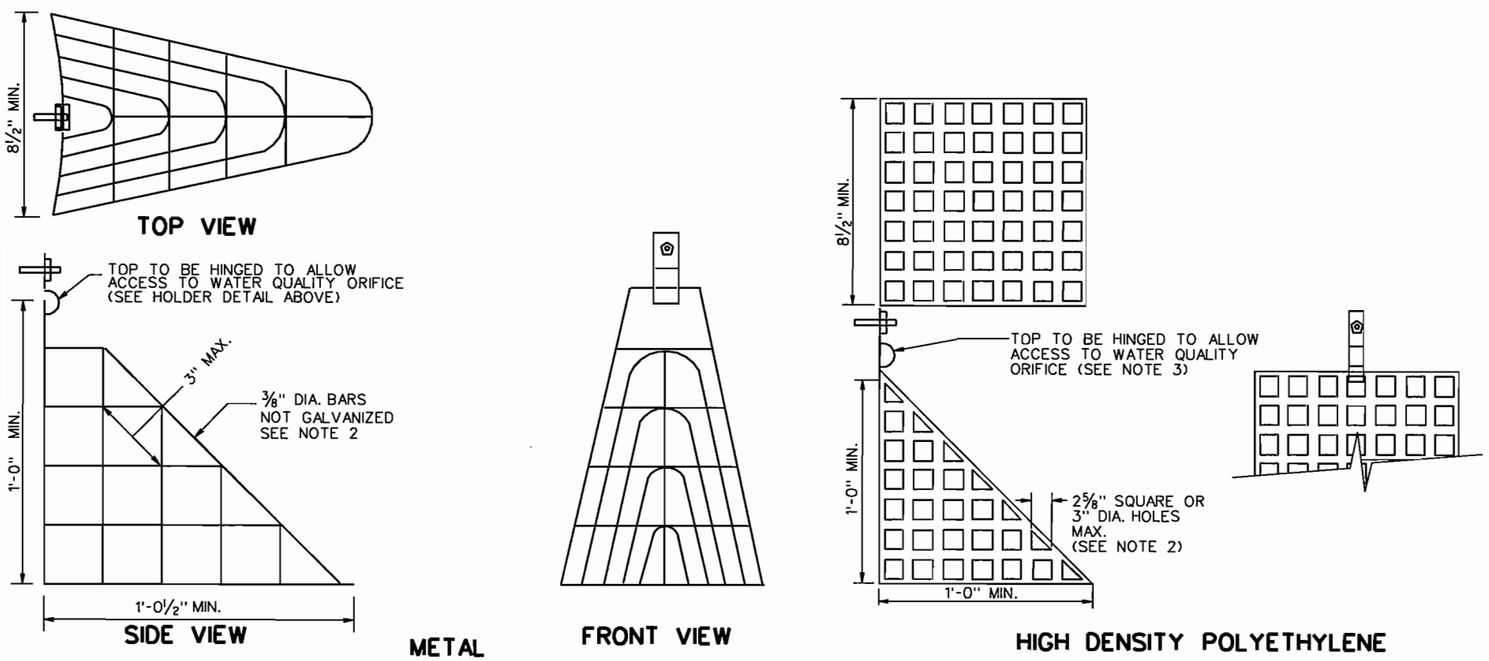

DETAIL FOR DEBRIS RACK
(FOR WATER QUALITY ORIFICE)

SHEET 2 OF 5

SPECIFICATION REFERENCE
302

STORMWATER MANAGEMENT (SWM) DETAILS

DEBRIS RACK, METAL PLATE, WATER QUALITY ORIFICE, CONCRETE CRADLE
(FOR SWM DRAINAGE STRUCTURES, SWM RISER PIPES AND SWM DAMS)

REV. 3/03

116.05

SHEET 2 OF 5

U.S. DEPARTMENT OF TRANSPORTATION
FEDERAL HIGHWAY ADMINISTRATION
EASTERN FEDERAL LANDS HIGHWAY DIVISION

DETAIL

STORMWATER MANAGEMENT (SWM) DETAILS

DETAIL APPROVED FOR USE --/----

REVISED:

DETAIL E603-D

6/16/2008 10:30:07 AM C:\PWworking\PITT\dms8108\Detail_SWM-D2.dgn

REG	STATE	PROJECT	SHEET NO.
-	VA	VA-A-AD-48(1)	S35

SWM-DR

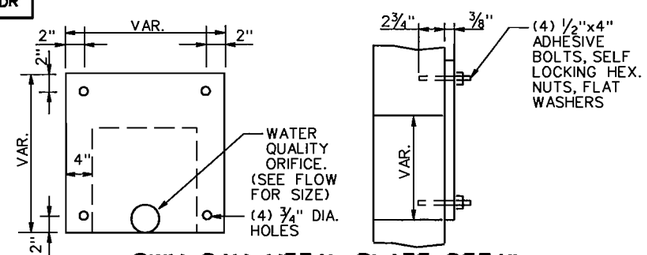

SWM DAM METAL PLATE DETAIL

(NOT GALVANIZED)

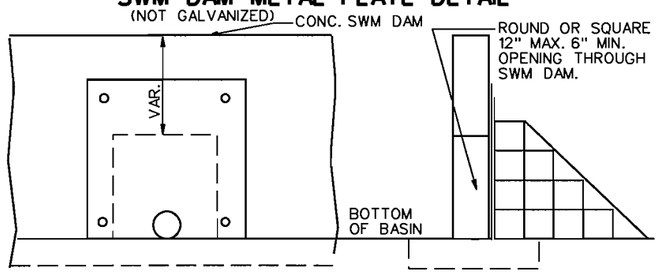

DETAIL FOR METAL PLATE AND WATER QUALITY ORIFICE

SIDE VIEW OF SWM DAM WITH DEBRIS

TYPICAL SWM DAM

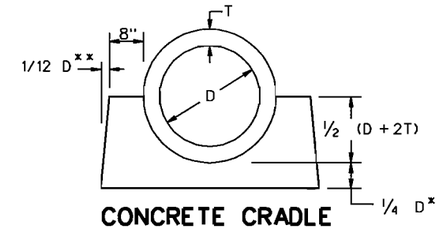

CONCRETE CRADLE

PIPE SIZE INCHES	CRADLE BOTTOM WIDTH (INCHES)	CRADLE HEIGHT (INCHES)	CRADLE TOP WIDTH (INCHES)	INCREMENT, IN CUBIC YARDS, PER LINEAR FOOT OF PIPE
12	34	14	32	0.093
15	38	15.75	35.5	0.110
18	42	17.5	39	0.129
24	50	21	46	0.168
30	58	26	53	0.233
36	66	31	60	0.307
42	74	36	67	0.390

CONCRETE SHALL BE CLASS A(AE)(F'C - 3000 PSI)

* BUT NOT LESS THAN 6"

** IF THE PIPE IS LAID IN AN EXCAVATED TRENCH, THEN THE SIDE WALLS MAY CONFORM TO THE TRENCH SHAPE (IE THE TRENCH MAY BECOME THE CRADLE FORM).

CONCRETE CRADLE IS TO BE INSTALLED UNDER THE ENTIRE LENGTH OF CULVERT AT EACH STORMWATER MANAGEMENT BASIN.

CONCRETE CRADLE IS TO BE PAID FOR AS MISCELLANEOUS CONCRETE AND SUMMARIZED IN CUBIC YARDS FOR EACH PIPE LOCATION

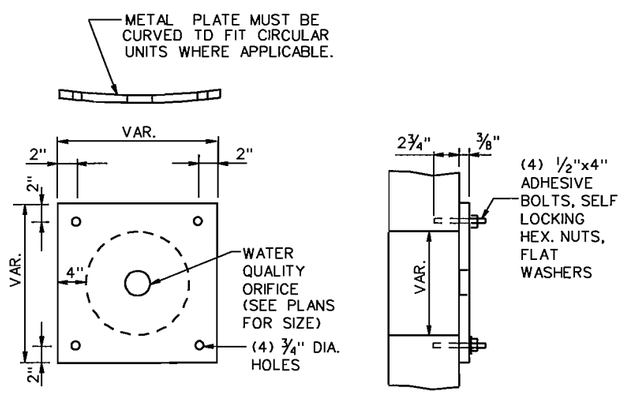

METAL PLATE DETAIL

(NOT GALVANIZED)

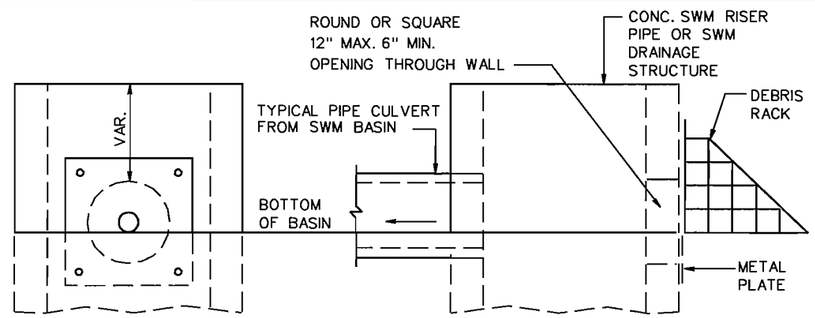

DETAIL FOR METAL PLATE AND WATER QUALITY ORIFICE

SIDE VIEW WITH DEBRIS RACK

TYPICAL SWM DRAINAGE STRUCTURE

SHEET 3 OF 5

STORMWATER MANAGEMENT (SWM) DETAILS

DEBRIS RACK, METAL PLATE, WATER QUALITY ORIFICE, CONCRETE CRADLE
(FOR SWM DRAINAGE STRUCTURES, SWM RISER PIPES AND SWM DAMS)

REV. 3/03

116.06

SPECIFICATION REFERENCE

302

SHEET 3 OF 5

U.S. DEPARTMENT OF TRANSPORTATION
FEDERAL HIGHWAY ADMINISTRATION
EASTERN FEDERAL LANDS HIGHWAY DIVISION

DETAIL

STORMWATER MANAGEMENT (SWM) DETAILS

DETAIL APPROVED FOR USE --/----

REVISED:

DETAIL E603-D

6/16/2008 10:30:45 AM C:\PWworking\PITT\dms8108\Detail_SWM-D3.dgn

REG	STATE	PROJECT	SHEET NO.
-	VA	VA-A-AD-48(1)	S36

SWM-DR

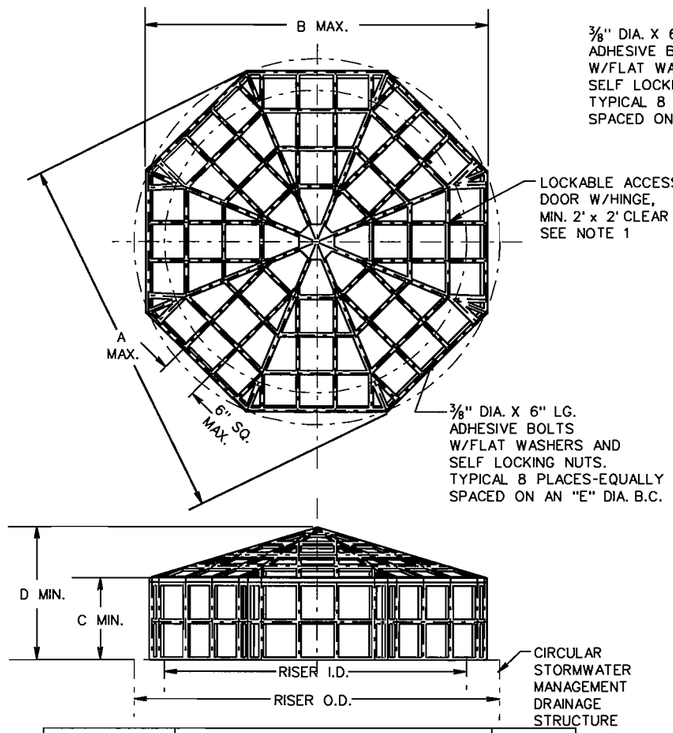

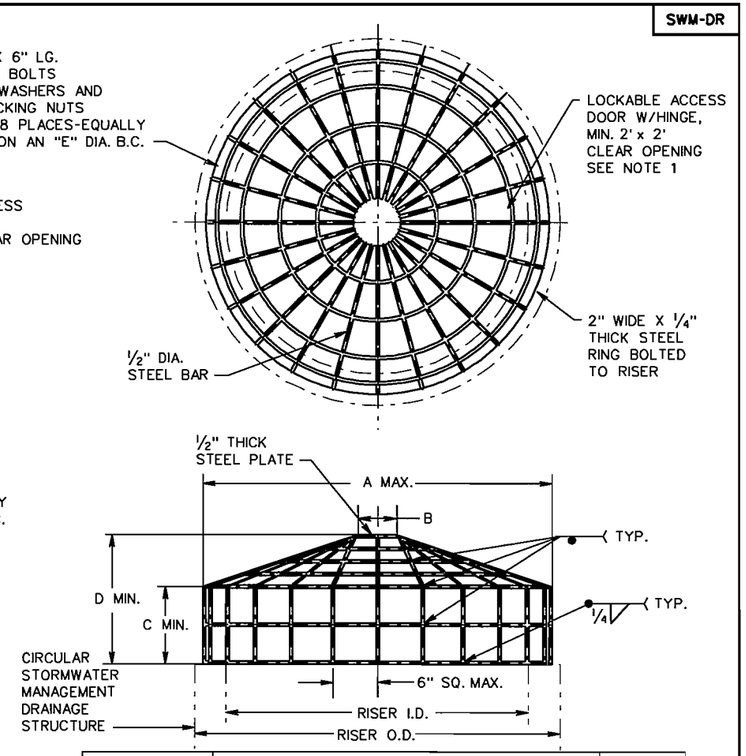

RISER		DIMENSION					APPROX.
I.D.	O.D.	A	B	C	D	E	WT. (LBS.)
24	30	31	28 5/8	7	11	27	24
36	44	45	41 1/2	13	19	40	58
48	58	59	54 1/2	13	21	53	86
60	72	73	67 1/2	17	28	66	135
72	86	87	80 3/8	23	35	79	204
84	100	101	93 1/4	25	39	92	266
96	114	115	106 1/4	22	38	105	305

HIGH DENSITY POLYETHYLENE

RISER		DIMENSION						APPROX.
I.D.	O.D.	A	B	C	D	E	SEGMENT	WT. (LBS.)
24	30	30	6	7	10	27	15	46
36	44	42	6	13	18	40	22	82
48	58	55	9	13	20	53	29	120
60	72	68	9	17	26	66	36	169
72	86	81	9	23	34	79	42	227
84	100	94	12	25	37	92	49	290
96	114	107	12	22	36	105	56	341

METAL

NOTES:
1. A HINGED, LOCKABLE ACCESS DOOR SHALL BE PROVIDED ON ALL TRASH RACKS IF THE TOTAL WEIGHT OF THE TRASH RACK IS GREATER THAN 75 LBS OR IF THE TRASH RACK IS TO BE PLACED ON A SWM-1 WITH AN "H" DIMENSION GREATER THAN 7'-2".
2. ANTI-VORTEX PLATE IS TO BE USED WHEN SPECIFIED ON THE PLANS. COST OF FURNISHING AND PLACING THE ANTI-VORTEX PLATE IS TO BE INCLUDED IN THE BID PRICE FOR THE STRUCTURE.

SHEET 4 OF 5

SPECIFICATION REFERENCE: 302

STORMWATER MANAGEMENT (SWM) DETAILS TRASH RACK FOR STORMWATER MANAGEMENT DRAINAGE STRUCTURES

NEW 3/03

116.07

SHEET 4 OF 5

U.S. DEPARTMENT OF TRANSPORTATION
FEDERAL HIGHWAY ADMINISTRATION
EASTERN FEDERAL LANDS HIGHWAY DIVISION

DETAIL

STORMWATER MANAGEMENT (SWM) DETAILS

DETAIL APPROVED FOR USE --/----

REVISED:

DETAIL E603-D

6/16/2008 10:31:28 AM C:\PWworking\PITT\dms81081\Detail_SWM-D4.dgn

REG	STATE	PROJECT	SHEET NO.
-	VA	VA-A-AD-48(1)	S37

SWM-DR

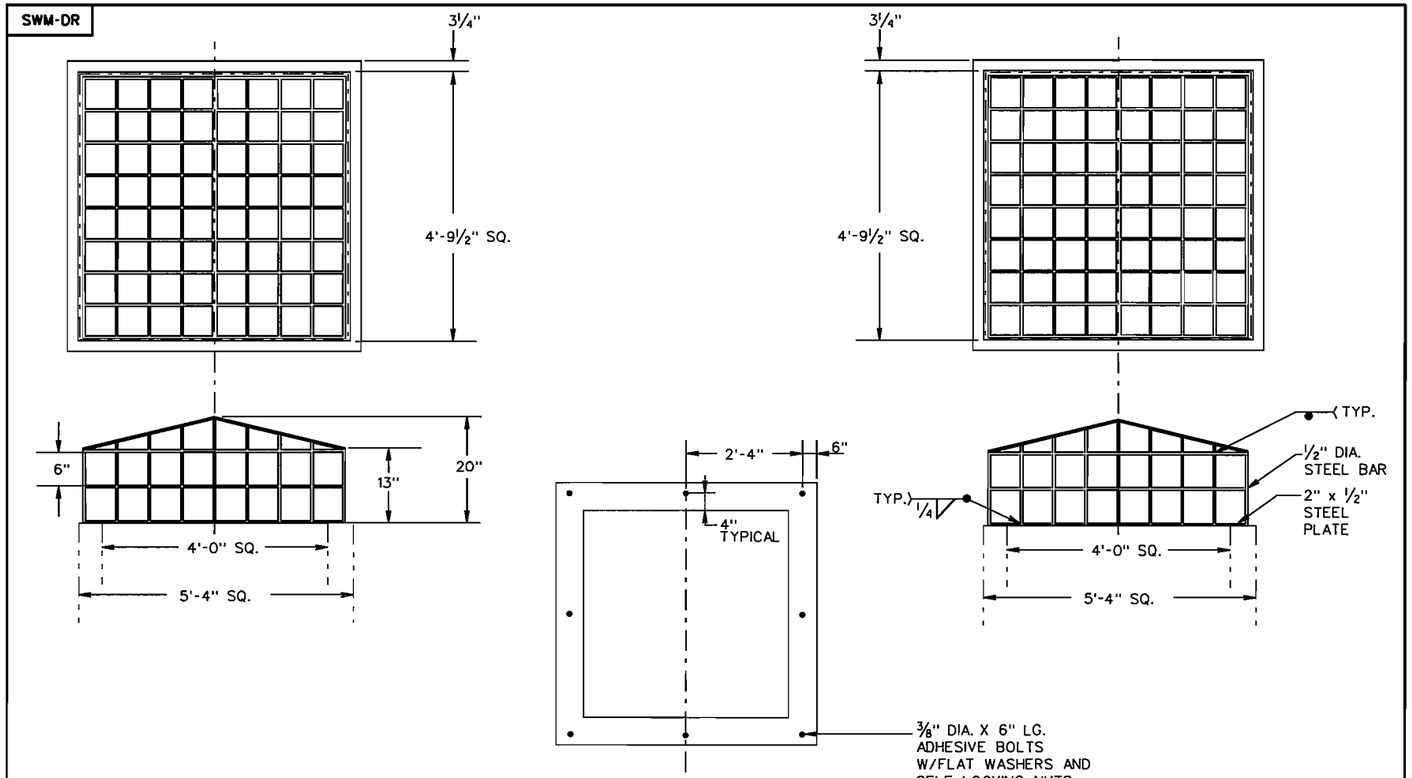

NOTES:
1. A HINGED, LOCKABLE ACCESS DOOR WITH A MINIMUM 2' x 2' CLEAR OPENING, SHALL BE PROVIDED ON ALL TRASH RACKS.

HIGH DENSITY POLYETHYLENE

APPROX. WT. (LBS.)
95

METAL (STEEL)

APPROX. WT. (LBS.)
188

SHEET 5 OF 5

NEW 3/03

116.08

STORMWATER MANAGEMENT (SWM) DETAILS TRASH RACK FOR STORMWATER MANAGEMENT DRAINAGE STRUCTURES

SPECIFICATION REFERENCE

302

SHEET 5 OF 5

U.S. DEPARTMENT OF TRANSPORTATION
FEDERAL HIGHWAY ADMINISTRATION
EASTERN FEDERAL LANDS HIGHWAY DIVISION

DETAIL

STORMWATER MANAGEMENT (SWM) DETAILS

DETAIL APPROVED FOR USE --/----

REVISED:

DETAIL E603-D

6/16/2008 10:32:09 AM C:\PWworking\PITT\dms81081\Detail_SWM-D5.dgn

REG	STATE	PROJECT	SHEET NO.
-	VA	VA-A-AD-48(1)	S38

DI-12,12A

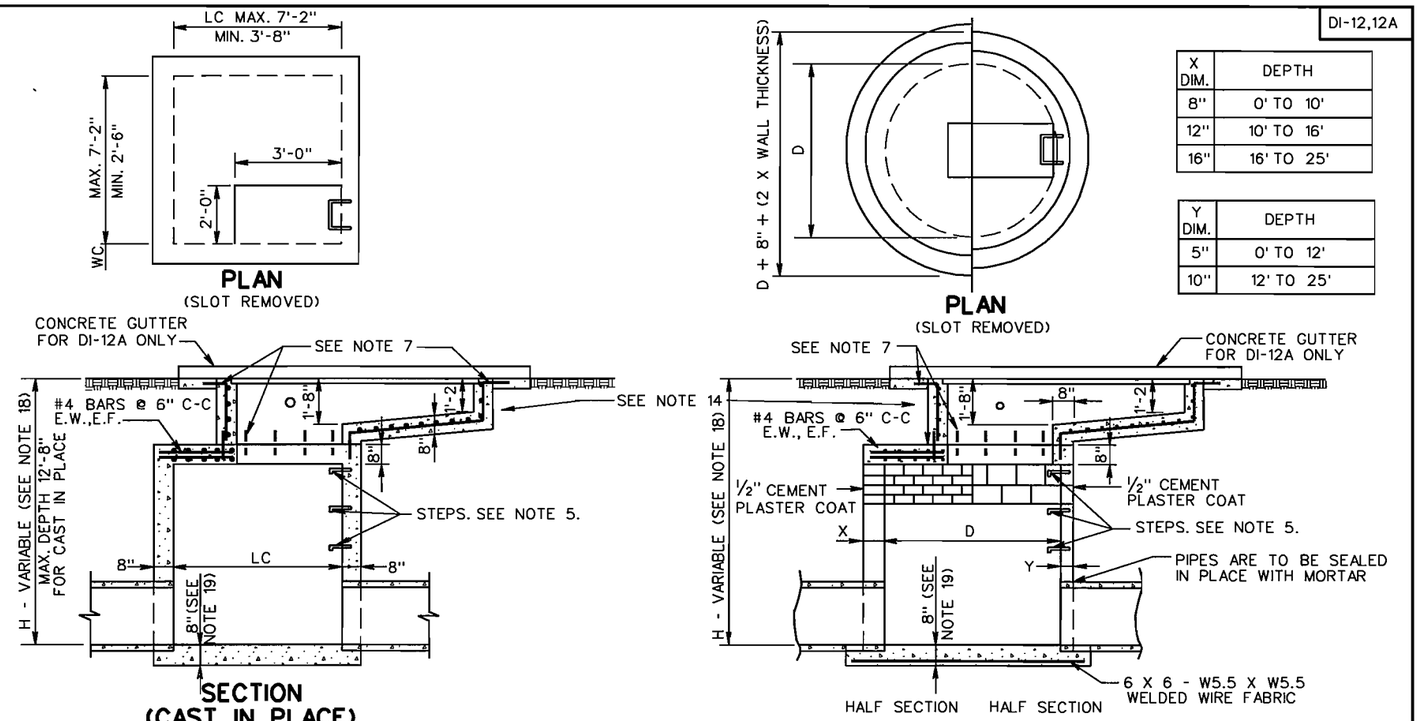

X DIM.	DEPTH
8"	0' TO 10'
12"	10' TO 16'
16"	16' TO 25'

Y DIM.	DEPTH
5"	0' TO 12'
10"	12' TO 25'

NOTES

1. USE OF INLET RESTRICTED TO NON-VEHICULAR LOCATIONS.
2. DEPTH OF INLET (H) AND LENGTH (L) TO BE SHOWN ON PLANS.
3. THE "H" DIMENSION SHOWN ON THE STANDARDS AND SPECIFIED ON THE PLANS WILL BE MEASURED FROM THE INVERT OF THE OUTFALL PIPE TO THE TOP OF THE STRUCTURE.
4. WHEN SPECIFIED ON THE PLANS THE INVERT IS TO BE SHAPED IN ACCORDANCE WITH STANDARD IS-1. THE COST OF FURNISHING AND PLACING ALL MATERIALS INCIDENTAL TO THE SHAPING IS TO BE INCLUDED IN THE BID PRICE FOR THE STRUCTURE.
5. IN THE EVENT THE INVERT OF THE OUTFALL PIPE IS HIGHER THAN THE BOTTOM OF THE STRUCTURE, THE INVERT OF THE STRUCTURE SHALL BE SHAPED WITH CEMENT MORTAR TO PREVENT STANDING OR PONDING OF WATER IN THE STRUCTURE. THE COST OF FURNISHING AND PLACING ALL MATERIALS INCIDENTAL TO THE SHAPING IS TO BE INCLUDED IN THE BID PRICE FOR THE STRUCTURE.
6. STEPS ARE TO BE PROVIDED WHEN H IS 4'-0" OR GREATER. FOR DETAILS SEE STANDARD ST-1.
7. CHAMBER MAY BE PRECAST. SEE STANDARD 103.10 FOR DETAILS.
8. # 4 DOWELS 12" LONG SPACED AT 12" C-C ALL SIDES.
9. FOOTING MAY BE ROUND OR SQUARE IN SHAPE. KEY IS TO BE 1" DEEP X WALL THICKNESS + 1".
10. ALL REINFORCING STEEL SHALL HAVE A MIN. COVER OF 2".
11. ALL REINFORCING STEEL TO BE CUT CLEAR OF ALL OPENINGS BY 2".
12. CAST-IN PLACE CONCRETE IS TO BE CLASS A(AE) (f'c=3000 PSI). PRECAST CONCRETE IS TO BE 4000 PSI.
13. ALL REINFORCING BARS TO BE #4.
14. GRATE BARS TO BE INSTALLED SO THEY WILL BE ALIGNED PARALLEL TO DITCH FLOW.
15. FOR DETAILS OF CONCRETE SLOT, COLLAR AND GRATE, AND METHOD OF PLACING APPROACH GUTTER SEE SHEET 2 OF 3.
16.
17. QUANTITIES SHOWN ARE FOR INLETS WITHOUT PIPES. PIPE DISPLACEMENTS MUST BE DEDUCTED TO OBTAIN TRUE QUANTITIES. SEE SHEET 3 OF 3 FOR QUANTITIES.
18. PROVIDE SAFETY SLABS WHEN SPECIFIED ON THE PLANS.
19. SEE TABULATION CHART ON SHEET 3 OF 3 FOR FOR MINIMUM DEPTH (H).
20. 10" THICK SLAB FOR PIPE SIZES 60" TO 72" IN DIAMETER.
21. THE TYPE OF INLET DETAILED HEREON TO BE CONSTRUCTED WILL BE AT THE OPTION OF THE CONTRACTOR.
22. DI-12 NO GUTTER.
    DI-12A PERIPHERAL GUTTER.

SHEET 1 OF 3

SPECIFICATION REFERENCE
233 302

MULTIGRATE DROP INLET FOR PIPE SIZES 12" TO 72"

104.30

Sheet 1 of 3

U.S. DEPARTMENT OF TRANSPORTATION
FEDERAL HIGHWAY ADMINISTRATION
EASTERN FEDERAL LANDS HIGHWAY DIVISION

DETAIL

MULTIGRATE DROP INLET FOR PIPE SIZES 12" TO 72"

DETAIL APPROVED FOR USE --/----
REVISED:

DETAIL
E604-A

6/16/2008 10:33:58 AM C:\PWworking\PITT\dms8108\DETAIL_DI-12-1.dgn

REG	STATE	PROJECT	SHEET NO.
-	VA	VA-A-AD-48(1)	S39

INSERTABLE SHEET A-163

DI-12,12A

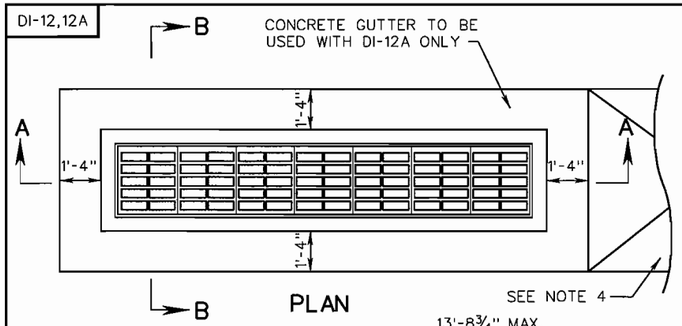

PLAN

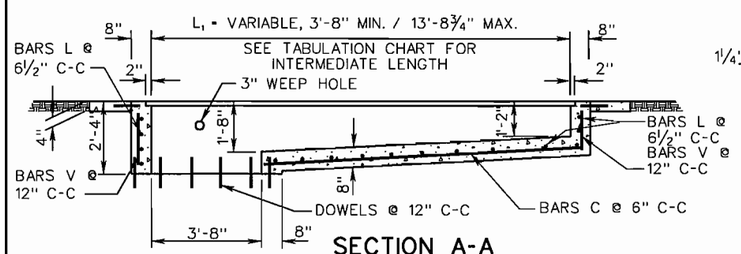

SECTION A-A
(CHAMBER NOT SHOWN)
(SLOT MAY BE CAST IN PLACE OR PRECAST)

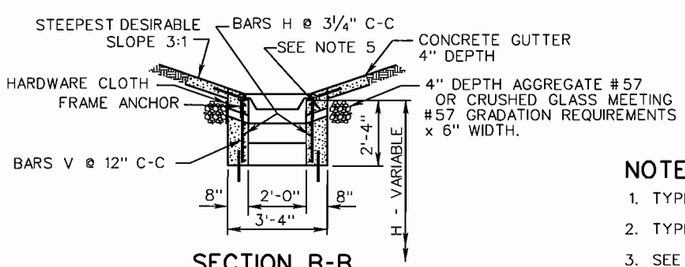

SECTION B-B
(CHAMBER NOT SHOWN)

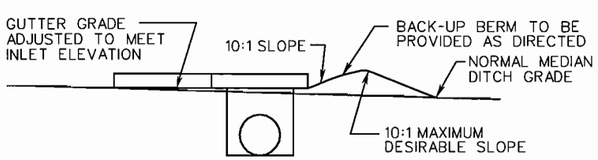

LONGITUDINAL SECTION
(WHEN INLET IS LOCATED ABOVE NORMAL DITCH GRATE)

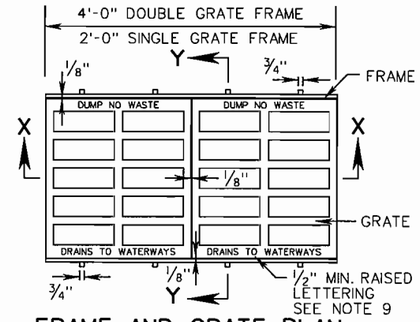

FRAME AND GRATE PLAN

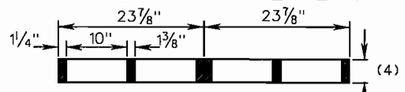

GRATE SECTION X-X

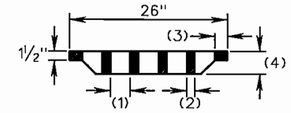

GRATE SECTION Y-Y

NOTE: SEE GRATE DIMENSION TABLE FOR GRATE TYPE I & II DIMENSIONS

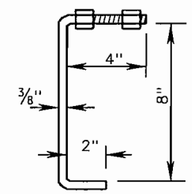

FRAME ANCHOR
⅜" DIAMETER BENT BAR

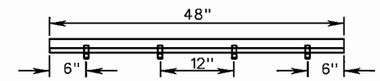

FRAME SECTION X-X

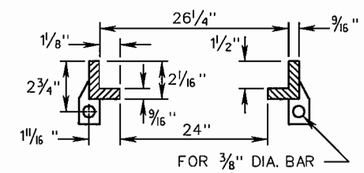

FRAME SECTION Y-Y

GRATE DIMENSIONS				
GRATE TYPE	OPENING WIDTH (1)	BAR THICKNESS (2)	END SECTION WIDTH (3)	GRATE THICKNESS (4)
TYPE I	3¼" 5 OPENINGS	1⅜" 4 BARS	2⅛"	3¾"
TYPE II	1½" 8 OPENINGS	1⅜" 7 BARS	2 3/16"	3¾"

NOTES:

1. TYPE I GRATE: LIMITED ACCESS AND RURAL UNLIMITED ACCESS: PEDESTRIAN ACCESS UNLIKELY
2. TYPE II GRATE: URBAN AREAS: PEDESTRIAN ACCESSIBLE AREAS.
3. SEE GRATE DIMENSION TABLE FOR SIZE AND NUMBER OF GRATE OPENINGS REQUIRED FOR TYPE I AND TYPE II GRATE.
4. PAVED DITCHES ARE TO BE TRANSITIONED TO MEET INLET GUTTER AS SHOWN IN STANDARD PG-2A.
5. 3" DIAMETER WEEP HOLE WITH 12" X 12" PLASTIC HARDWARE CLOTH ¼" MESH OR GALVANIZED STEEL WIRE, MINIMUM WIRE DIAMETER 0.03", NUMBER 4 MESH HARDWARE CLOTH ANCHORED FIRMLY TO OUTSIDE OF STRUCTURE.
6. IF NORMAL DITCH GRADE IS TOO FLAT TO ALLOW FOR ADJUSTED GRADE TO INLET, A SPECIAL GUTTER DETAIL WILL BE REQUIRED ON PLANS.
7. GRATE BARS TO BE PARALLEL TO DITCH FLOW.
8. DI-12 AND DI-12A ARE NOT TO BE UTILIZED IN LOCATIONS NORMALLY SUBJECT TO TRAFFIC.
9. DUMP NO WASTE DRAINS TO WATERWAYS LETTERING IS REQUIRED ON ALL DI-12 GRATES. LOCATION OF LETTERING MAY VARY BY MANUFACTURER.

SHEET 2 OF 3

MULTIGRATE DROP INLET FOR PIPE SIZES 12" TO 72"

SPECIFICATION REFERENCE
233
302

REV 8/07
104.31

Sheet 2 of 3

U.S. DEPARTMENT OF TRANSPORTATION
FEDERAL HIGHWAY ADMINISTRATION
EASTERN FEDERAL LANDS HIGHWAY DIVISION

DETAIL

MULTIGRATE DROP INLET FOR PIPE SIZES 12" TO 72"

DETAIL APPROVED FOR USE --/----
REVISED:

DETAIL
E604-A

6/16/2008 10:35:25 AM C:\PWworking\PITT\dms8108\DETAIL_DI-12-2.dgn

DI-12,12A

TABULATION CHARTS

APPROXIMATE QUANTITIES (SEE NOTE 2)

CAST IN PLACE CHAMBER

PIPE SIZES	MINIMUM DEPTH H (SEE NOTE 3)	REINFORCING STEEL LBS.	CONCRETE CU. YDS.	CHAMBER DIMENSIONS		CONCRETE CHAMBER INCREMENTS PER FOOT (SEE NOTE 1)
				W_C	L_C	CU. YDS.
12" TO 24"	4'-2"	20.5	1.20	2'-6"	3'-8"	.37
27" TO 36"	5'-6 1/4 "	30.33	2.14	3'-8"	3'-8"	.43
42" TO 54"	6'-10 1/2 "	129.80	4.39	5'-5"	5'-5"	.53
60" TO 72"	8'-6"	277.32	7.65	7'-2"	7'-2"	.69

APPROXIMATE QUANTITIES

BRICK AND BLOCK CHAMBER

PIPE SIZES	CHAMBER DIMENSIONS "D"	REINFORCING STEEL LBS.	CONCRETE CU. YDS.	BRICK		BLOCK
				MIN. DEPTH H	NO.	NO.
12" TO 24"	4'-0"	102.68	1.25	4'-2"	688	42
27" TO 36"	4'-0"	102.68	1.25	5'-6¼"	911	55
42" TO 54"	5'-6"	200.81	2.01	7'-10½"	1300	111
60" TO 72"	8'-0"	404.74	3.65	9'-6"	1568	190

BRICK CHAMBER INCREMENTS PER FT.

X DIM.	DEPTH	4' DIAMETER APPROX. NO. BRICKS/FT.	5'-6" DIAMETER APPROX. NO. BRICKS/FT.	8'-0" DIAMETER APPROX. NO. BRICKS/FT.
8"	0' - 10'	165	227	330
12"	10' - 16'	250	341	495
16"	16' - 25'	330	454	660

BLOCK CHAMBER INCREMENTS PER FT.

Y DIM.	DEPTH	4' DIAMETER APPROX. NO. BRICKS/FT.	5'-6" DIAMETER APPROX. NO. BRICKS/FT.	8'-0" DIAMETER APPROX. NO. BRICKS/FT.
5"	0' - 12'	10	14	20
10"	12' - 25'	20	28	40

APPROXIMATE QUANTITIES - DI - 12 ONLY

(SEE NOTE 4)

SLOT 4' TO 14'

(SEE NOTE 8)

L (SEE NOTE 8)	L_1	CONCRETE CU. YDS.	REINFORCING STEEL LBS.	GRATES NO.
4	3'-8"	0.81	81.27	2
6	5'-8¾"	1.10	122.81	3
8	7'-8"	1.30	161.90	4
10	9'-8¾"	1.61	203.37	5
12	11'-8"	1.91	242.45	6
14	13'-8¾"	2.22	283.93	7

NOTES

1. FOR EACH ADDITIONAL FOOT IN DEPTH THE INCREMENT SHOWN MUST BE MULTIPLIED BY THE ADDITIONAL DEPTH IN FEET AND ADDED TO THE CONCRETE TOTAL.
2. APPROXIMATE QUANTITIES ARE SHOWN FOR BIDDING PURPOSES ONLY: ITEMS ARE NOT TO BE BID SEPARATELY. TO OBTAIN THE TOTAL APPROXIMATE CONCRETE QUANTITIES FOR EACH INLET, THE CHAMBER, SLOT AND GUTTER (GUTTER TO BE USED WITH DI-12A ONLY) QUANTITIES MUST BE ADDED TOGETHER.
3. MINIMUM DEPTHS SHOWN ARE FOR THE SMALLEST PIPE SIZE IN EACH SERIES. MINIMUM DEPTH H = PIPE DIAMETER + PIPE WALL THICKNESS + 3".
4. FOR APPROXIMATE QUANTITIES FOR DI-12A ADD 0.36 CU. YDS. OF CLASS A3 CONCRETE TO DI-12 QUANTITIES FOR CONCRETE GUTTER. QUANTITY SHOWN IS FOR A MINIMUM SLOT LENGTH OF 3'-8". FOR OTHER CONCRETE LENGTHS SEE CONCRETE GUTTER INCREMENTS IN THIS TABLE.
5. DI-12A CONCRETE GUTTER INCREMENT: ADD 0.07 CU. YDS. CLASS A(AE)(F'C=3000PSI) CONCRETE FOR EACH ADDITIONAL FOOT OF SLOT LENGTH GREATER THAN MINIMUM 3'-8".
6. DOWELS ARE TO BE PROVIDED FOR THE JOINT BETWEEN THE CONCRETE GUTTER AND SLOT. THE COST OF DOWELS ARE TO BE INCLUDED IN THE CUBIC YARD COST FOR CONCRETE.
7. SLOT MAY BE PRECAST OR CAST IN PLACE.
8. L = LENGTH ROUNDED FOR PLAN USE.

Sheet 3 of 3

SPECIFICATION REFERENCE
233 302

MULTIGRATE DROP INLET FOR PIPE SIZES 12" TO 72"

104.32

Sheet 3 of 3

U.S. DEPARTMENT OF TRANSPORTATION
FEDERAL HIGHWAY ADMINISTRATION
EASTERN FEDERAL LANDS HIGHWAY DIVISION

DETAIL

MULTIGRATE DROP INLET
FOR PIPE SIZES 12" TO 72"

DETAIL APPROVED FOR USE --/----

REVISED:

DETAIL
E604-A

6/16/2008 10:37:11 AM C:\PWworking\PITT\dms8108\DETAIL_DI-12-3.dgn

REG	STATE	PROJECT	SHEET NO.
-	VA	VA-A-AD-4B(1)	S41

MH-1

SEE APPLICABILITY OF SAFETY SLABS. (VDOT STD. SL-1)

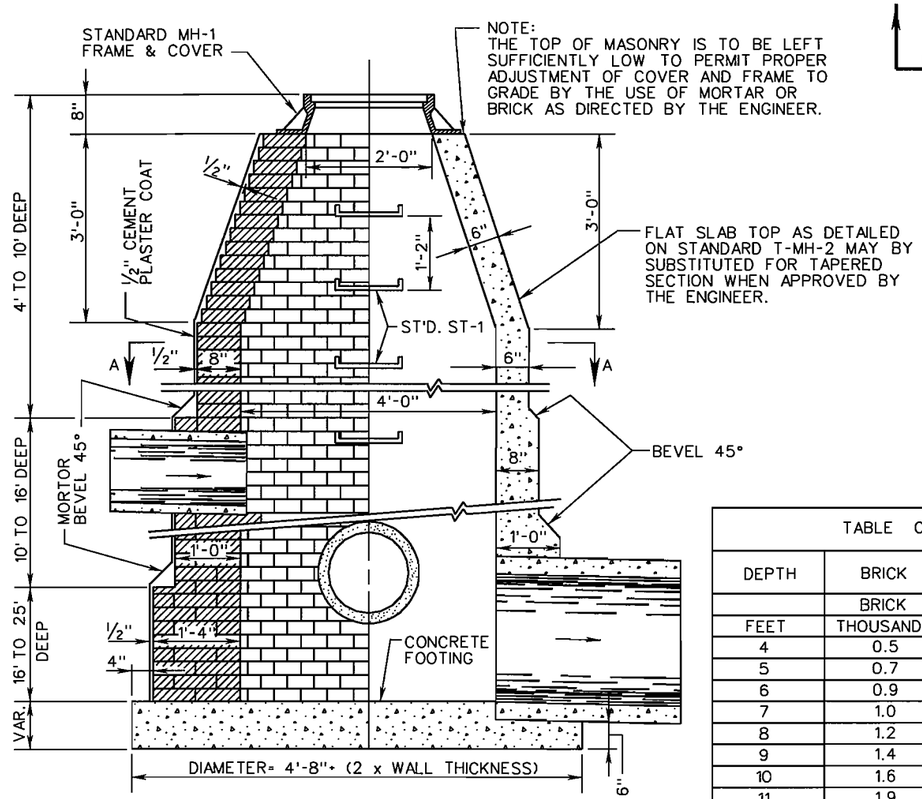

SECTION B-B

BRICK CONCRETE OR CONCRETE BLOCK

HALF PLAN VIEW

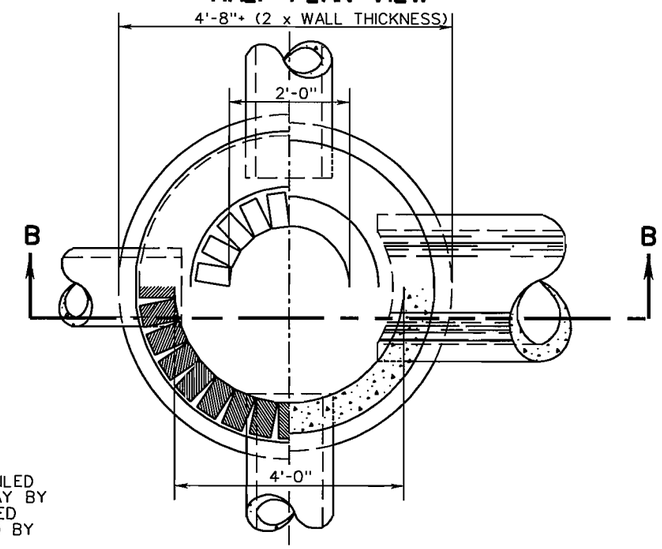

HALF SECTION A-A
(WITH FRAME AND COVER REMOVED)

BRICK CONCRETE

TABLE OF QUANTITIES			
DEPTH	BRICK	MANHOLE	CONCRETE MANHOLE
	BRICK	CONCRETE	CONCRETE
FEET	THOUSANDS	CU. YARDS	CU. YARDS
4	0.5	0.785	1.437
5	0.7	0.785	1.699
6	0.9	0.785	1.961
7	1.0	0.785	2.223
8	1.2	0.785	2.485
9	1.4	0.785	2.747
10	1.6	0.785	3.009
11	1.9	0.970	3.455
12	2.2	0.970	3.817
13	2.5	0.970	4.179
14	2.8	0.970	4.541
15	3.1	0.970	4.903
16	3.4	0.970	5.265
17	4.0	1.173	6.032
INCREMENT	0.45	-	0.582

NOTES:

1. QUANTITIES SHOWN ARE FOR MANHOLE WITHOUT PIPES. THE AMOUNT DISPLACED BY PIPES MUST BE DEDUCTED TO OBTAIN TRUE QUANTITIES.
2. A BASE THICKNESS OF 9" WAS USED IN COMPUTING CONCRETE QUANTITIES.
3. INCREMENTS TO BE ADDED FOR EACH ADDITIONAL FOOT OF DEPTH.
4. MATERIALS MAY BE BRICK, CONCRETE OR APPROVED CONCRETE MANHOLE BLOCK.
5. IF BLOCKS ARE USED THE MINIMUM THICKNESS OF SAME IS TO BE 5". OTHER THICKNESSES ARE TO CONFORM TO WALL THICKNESS SHOWN FOR CONCRETE.
6. ALL CONCRETE TO BE CLASS A(AE)(F'C=3000PSI).
7. WHEN SPECIFIED ON PLANS THE INVERT IS TO BE SHAPED IN ACCORDANCE WITH STANDARD IS-1. THE COST OF FURNISHING AND PLACING ALL MATERIALS INCIDENTAL TO THE SHAPING IS TO BE INCLUDED IN THE BID PRICE FOR THE STRUCTURE.

SHEET 1 OF 5

REV. 7/01

106.01

MANHOLE FOR 12" - 48" PIPE CULVERTS

SPECIFICATION REFERENCE

302

SHEET 1 OF 5

U.S. DEPARTMENT OF TRANSPORTATION
FEDERAL HIGHWAY ADMINISTRATION
EASTERN FEDERAL LANDS HIGHWAY DIVISION

DETAIL

MANHOLE FOR 12" - 48" PIPE CULVERTS

DETAIL APPROVED FOR USE --/----

REVISED:

DETAIL E604-B

6/16/2008 10:38:31 AM C:\PWworking\PITT\dms8108\Detail_MH-1.dgn

REG	STATE	PROJECT	SHEET NO.
-	VA	VA-A-AD-48(1)	S42

MH-1

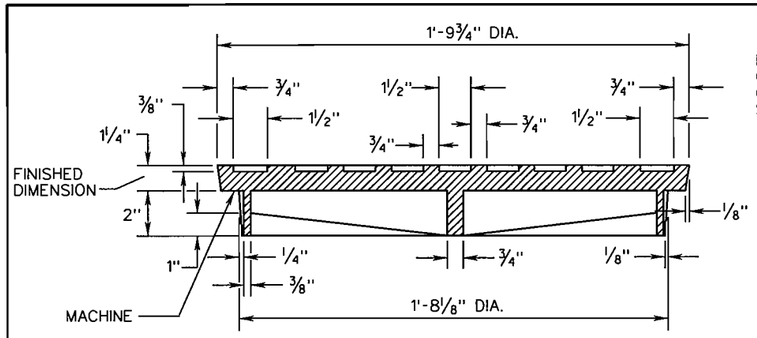

SECTION A-A

THE LETTERS V.D.O.T. ARE OPTIONAL IF USED THE LETTERS ARE TO BE CAST IN THE DEPRESSION IN TOP OF COVER 1" WIDE RAISED ⅜" HIGH AS SHOWN.

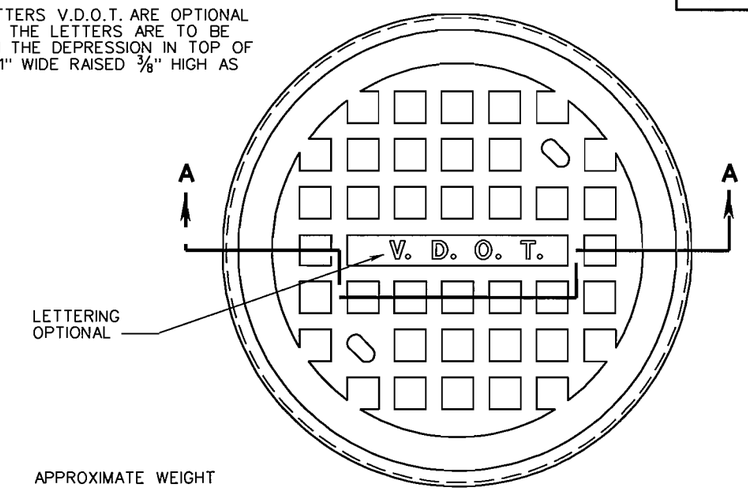

TOP

APPROXIMATE WEIGHT

CAST IRON

FRAME 239 ± 12 LBS.
COVER 137 ± 7 LBS.

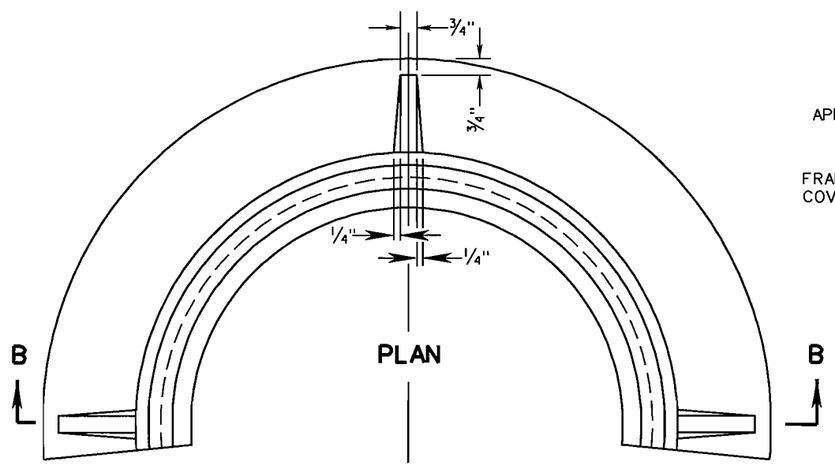

PLAN

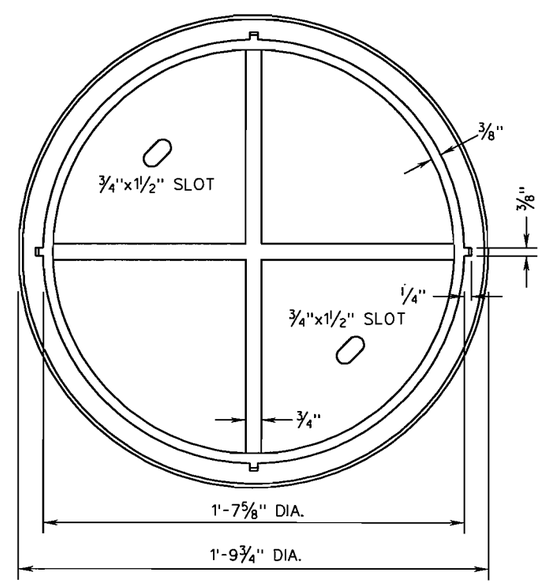

BOTTOM

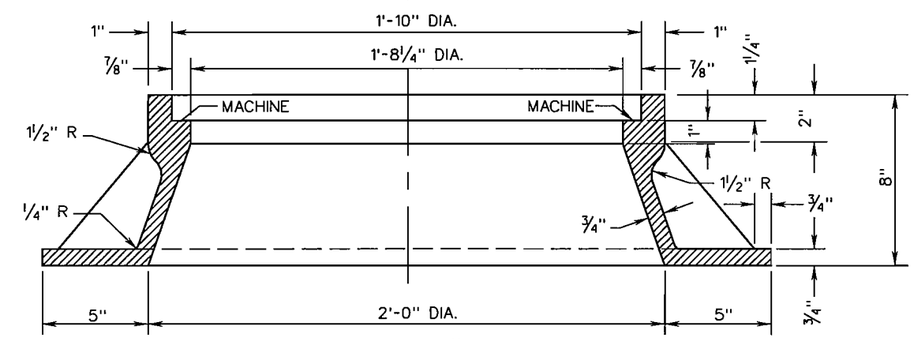

SECTION B-B

SHEET 2 OF 5

SPECIFICATION REFERENCE
224 302

STANDARD MANHOLE FRAME AND COVER

106.02

SHEET 2 OF 5

U.S. DEPARTMENT OF TRANSPORTATION
FEDERAL HIGHWAY ADMINISTRATION
EASTERN FEDERAL LANDS HIGHWAY DIVISION

DETAIL

STANDARD MANHOLE FRAME AND COVER

DETAIL APPROVED FOR USE --/----

REVISED:

DETAIL
E604-B

6/16/2008 10:39:49 AM C:\PWworking\PITT\dms81081\Detail_MH-1-2.dgn

REG	STATE	PROJECT	SHEET NO.
-	VA	VA-A-AD-48(1)	S43

MH-1

NOTES:
THE LETTERS V.D.O.T. ARE OPTIONAL, IF USED THE LETTERS ARE TO BE CAST IN THE DEPRESSION IN TOP OF COVER 1" WIDE AND RAISED 3/8" HIGH AS SHOWN.

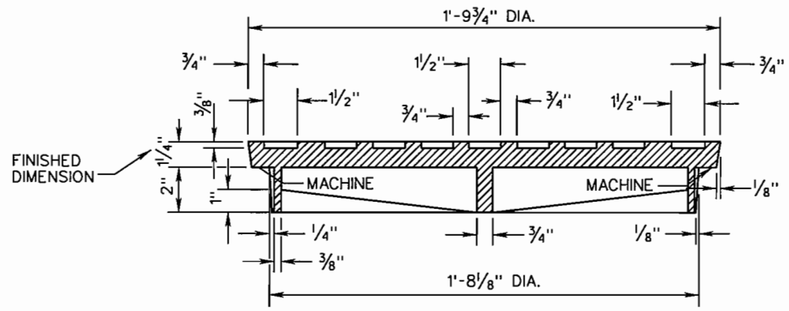

SECTION A-A

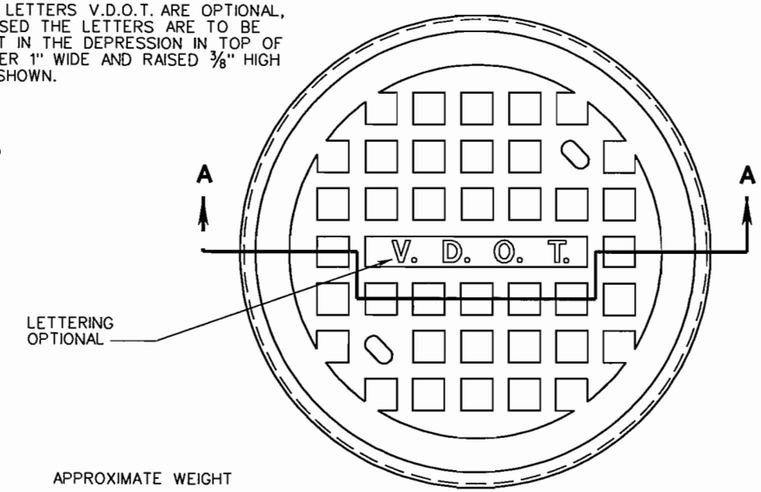

TOP

APPROXIMATE WEIGHT

CAST IRON

COVER 137 ± 7 LBS.
FRAME 235 ± 12 LBS.

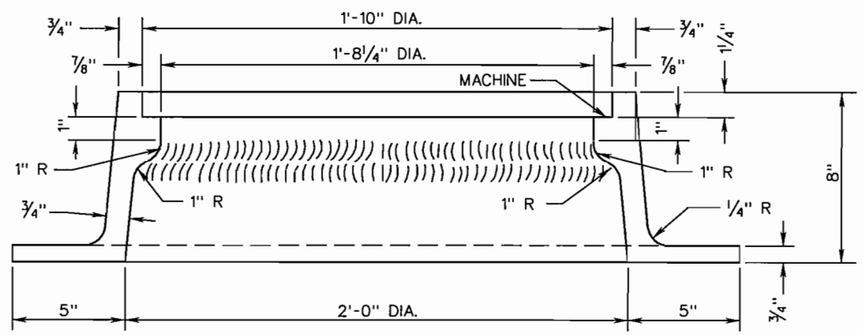

FRAME SECTION AT MID POINT

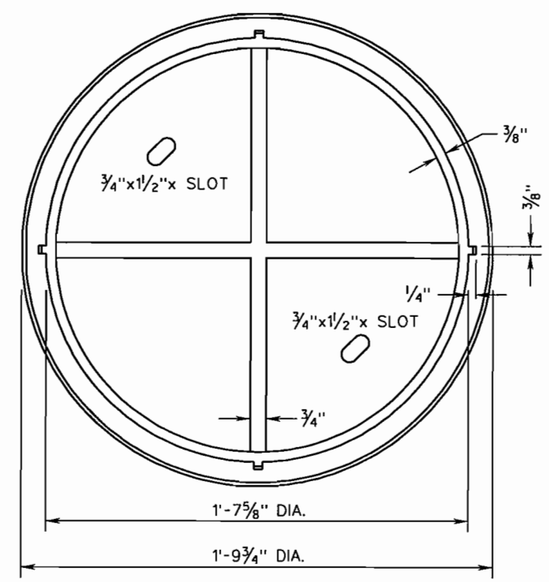

BOTTOM

SHEET 3 OF 5

STANDARD MANHOLE FRAME AND COVER

106.03

SPECIFICATION REFERENCE
224 302

SHEET 3 OF 5

U.S. DEPARTMENT OF TRANSPORTATION
FEDERAL HIGHWAY ADMINISTRATION
EASTERN FEDERAL LANDS HIGHWAY DIVISION

DETAIL

STANDARD MANHOLE FRAME AND COVER

DETAIL APPROVED FOR USE --/----

REVISED:

DETAIL E604-B

6/16/2008 10:41:04 AM C:\PWworking\PITT\dms81081\Detail_MH-1-3.dgn

REG	STATE	PROJECT	SHEET NO.
-	VA	VA-A-AD-48(1)	S44

MH-1

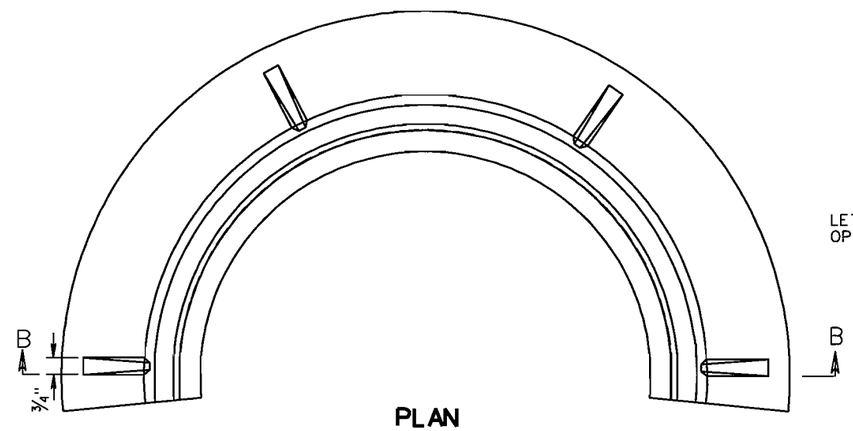

PLAN

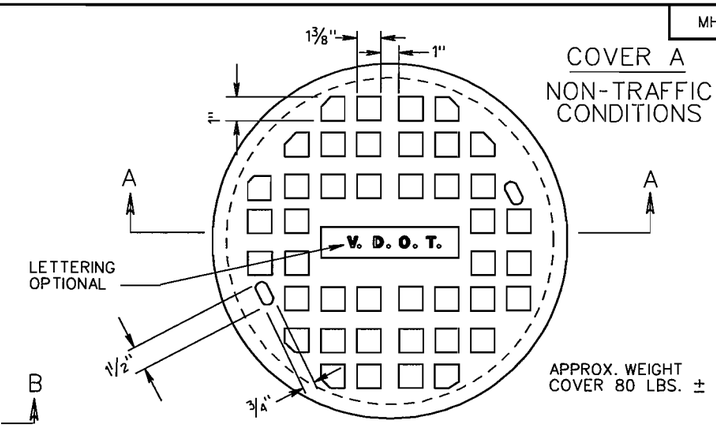

COVER A
NON-TRAFFIC CONDITIONS

APPROX. WEIGHT COVER 80 LBS. ±

TOP

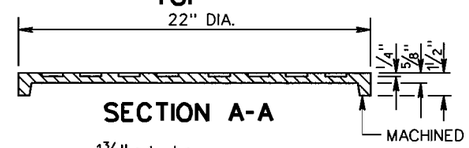

SECTION A-A

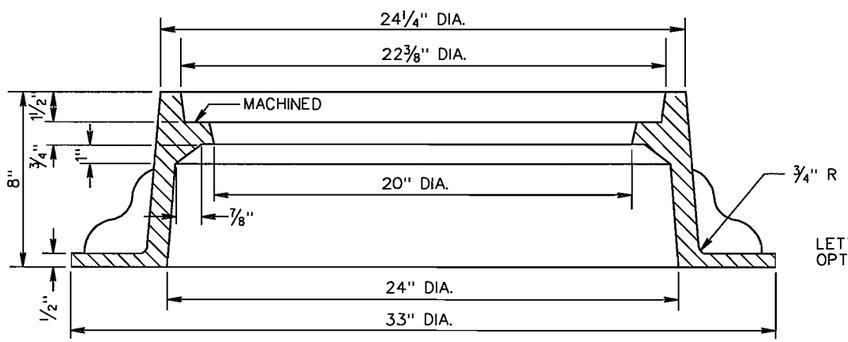

FRAME

EITHER COVER A OR B MAY BE USED WITH FRAME.

APPROX. WEIGHT COVER 170 LBS. ±

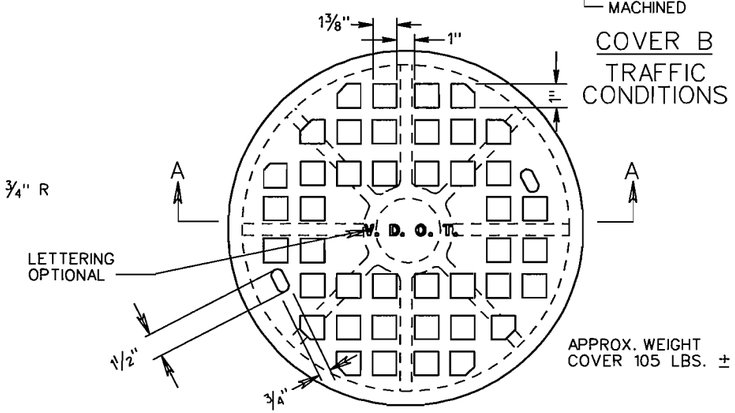

COVER B
TRAFFIC CONDITIONS

APPROX. WEIGHT COVER 105 LBS. ±

TOP

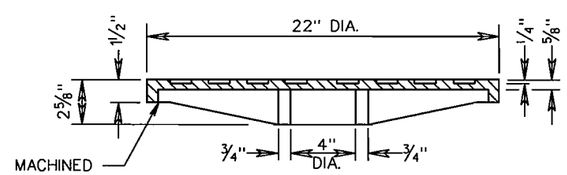

SECTION A-A

SHEET 4 OF 5

SPECIFICATION REFERENCE
224 302

STANDARD MANHOLE FRAME AND COVER

REV. 7/02

106.04

SHEET 4 OF 5

U.S. DEPARTMENT OF TRANSPORTATION
FEDERAL HIGHWAY ADMINISTRATION
EASTERN FEDERAL LANDS HIGHWAY DIVISION

DETAIL

STANDARD MANHOLE FRAME AND COVER

DETAIL APPROVED FOR USE --/----

REVISED:

DETAIL
E604-B

6/16/2008 10:43:14 AM C:\PWworking\PITT\dms8108\Detail_MH-1-4.dgn

REG	STATE	PROJECT	SHEET NO.
-	VA	VA-A-AD-48(1)	S45

MH-1

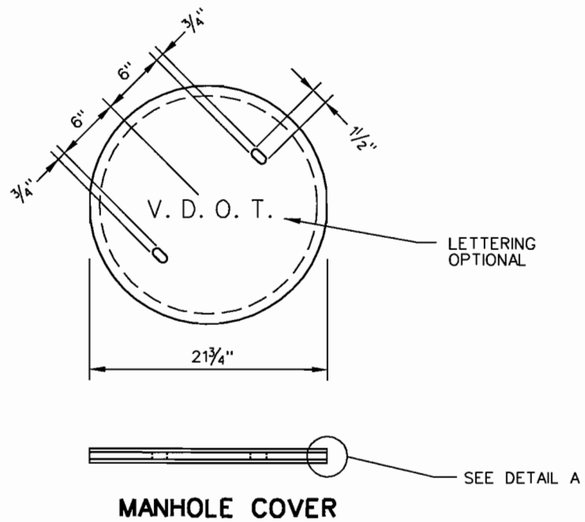

MANHOLE COVER

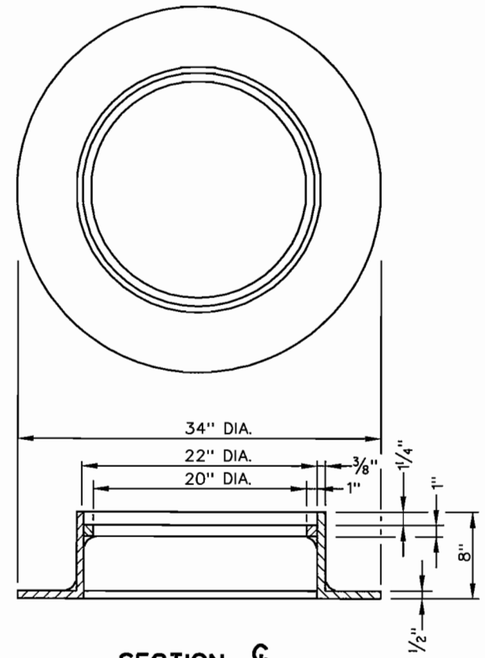

SECTION ℄
MANHOLE FRAME

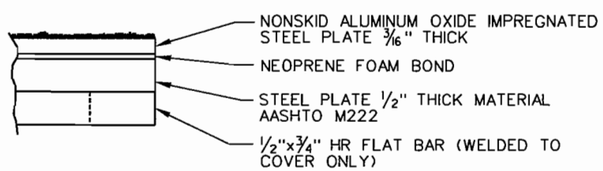

DETAIL A

NOTES:
STRUCTURAL COMPONENTS SHALL CONFORM TO AASHTO M222.

FRAME AND COVER SHALL HAVE A CONTINUOUS FLUSH FIT.

SHEET 5 OF 5

STANDARD MANHOLE FRAME AND COVER

SPECIFICATION REFERENCE

302

106.05

SHEET 5 OF 5

U.S. DEPARTMENT OF TRANSPORTATION
FEDERAL HIGHWAY ADMINISTRATION
EASTERN FEDERAL LANDS HIGHWAY DIVISION

DETAIL

STANDARD MANHOLE FRAME AND COVER

DETAIL APPROVED FOR USE --/----

REVISED:

DETAIL
E604-B

6/16/2008 10:44:38 AM C:\PWworking\PITT\dms81081\Detail_MH-1-5.dgn

REG	STATE	PROJECT	SHEET NO.
-	VA	VA-A-AD-48(1)	S46

MH-2

FOR DETAILS OF ALL COMPONENT PARTS AND "GENERAL NOTES- PRECAST" SEE SHEETS 103.01-103.11

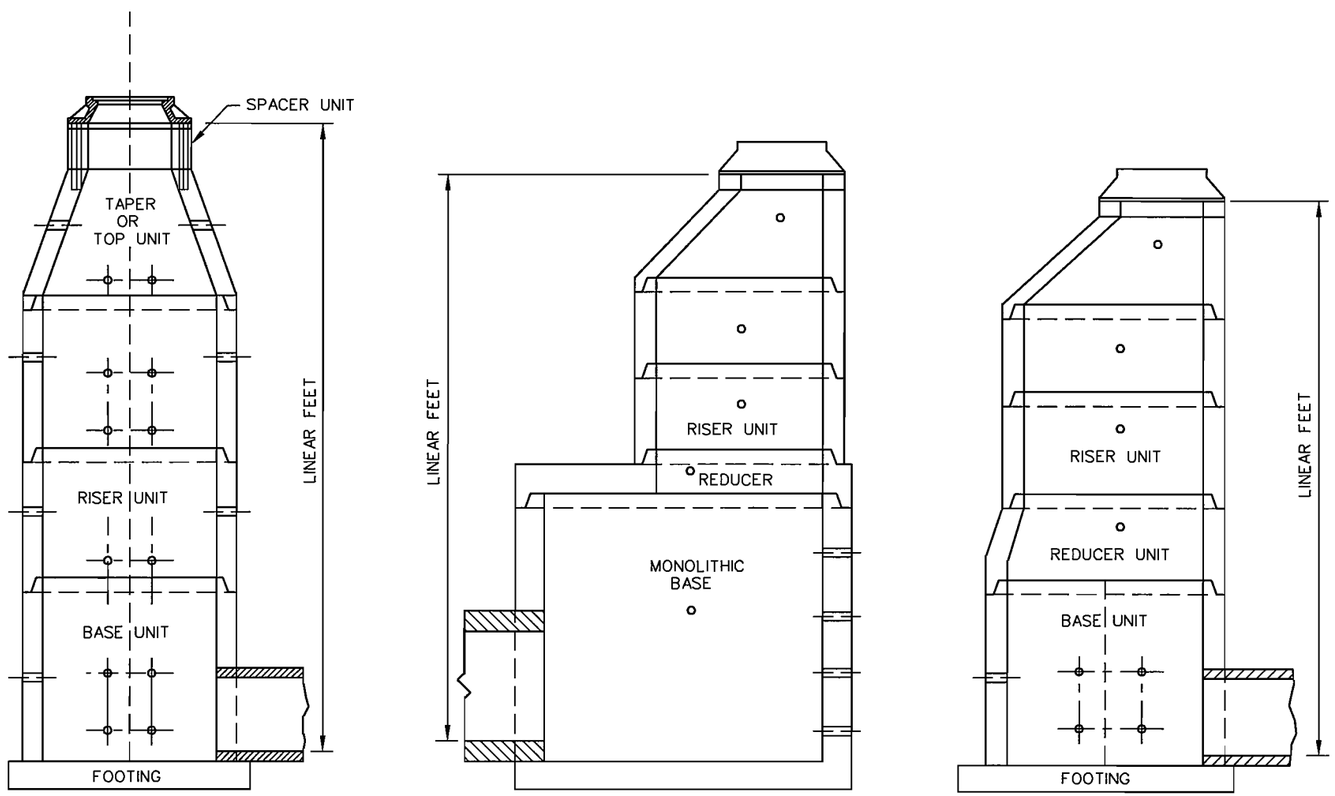

PRECAST MANHOLE

SPECIFICATION REFERENCE
105 302

106.07

U.S. DEPARTMENT OF TRANSPORTATION
FEDERAL HIGHWAY ADMINISTRATION
EASTERN FEDERAL LANDS HIGHWAY DIVISION

DETAIL

PRECAST MANHOLE

DETAIL APPROVED FOR USE --/----

REVISED:

DETAIL
E604-C

6/16/2008 10:46:15 AM C:\PWworking\PITT\dms81081\Detail_MH-2.dgn

REG	STATE	PROJECT	SHEET NO.
-	VA	VA-A-AD-48(1)	S47

SWM-1

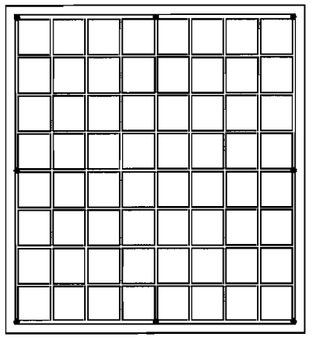

PLAN VIEW

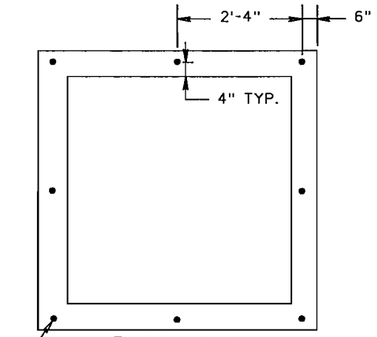

PLAN VIEW
(TRASH RACK NOT SHOWN)

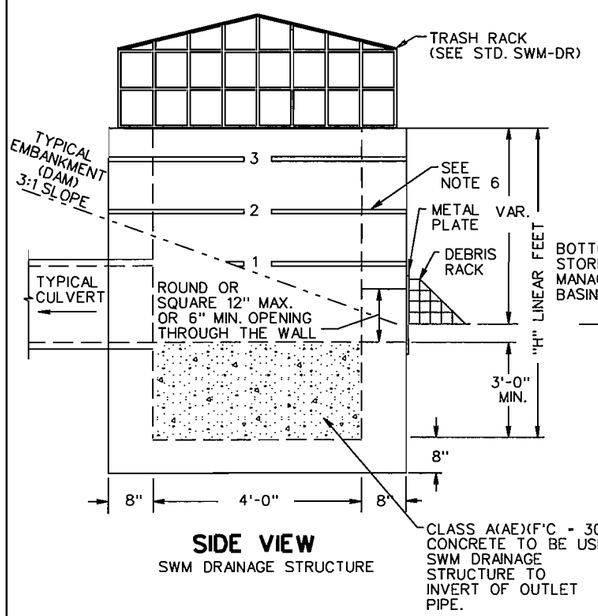

SIDE VIEW
SWM DRAINAGE STRUCTURE

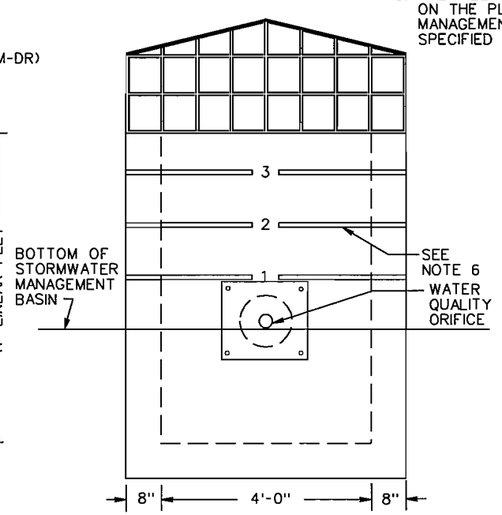

FRONT VIEW
(DEBRIS RACK NOT SHOWN)

NOTES:

1. COST OF TRASH RACK AND DEBRIS RACK ARE TO BE INCLUDED IN THE BID PRICE FOR THE STORMWATER MANAGEMENT DRAINAGE STRUCTURE.
2. STRUCTURE MAY BE PRECAST OR CAST IN PLACE. SEE SHEET 2 OF 2 FOR DETAILS ON PRECAST STRUCTURE.
3. WEEP HOLES SHALL NOT BE PROVIDED.
4. STEPS ARE TO BE PROVIDED WHEN HEIGHT OF STRUCTURE IS 4'-0" OR GREATER ABOVE INVERT OF OUTLET PIPE. FOR STEP DETAILS SEE STANDARD E604-J.
5. FOR DETAILS ON METAL PLATE, DEBRIS RACK AND TRASH RACK SEE STANDARD SWM-DR.
6. MARK HEIGHT OF STRUCTURE, IN BLACK, WITH 4" HIGH NUMERALS AND 1" WIDE HORIZONTAL STRIPES AT 1' INTERVALS FROM INVERT OF WATER QUALITY ORIFICE (ALL VISIBLE SIDES).
7. THE PERMANENT STORMWATER MANAGEMENT DRAINAGE STRUCTURE, STANDARD SWM-1 MAY BE MODIFIED WHERE THE STORMWATER MANAGEMENT BASIN IS TO BE USED AS A TEMPORARY SEDIMENT BASIN DURING PROJECT CONSTRUCTION. SEE STANDARD SWM-DR, SHEET 1 OF 5, FOR TEMPORARY MODIFICATION DETAILS.
8. THE SIZE OF THE WATER QUALITY ORIFICE SHALL BE SPECIFIED ON THE PLANS. ADDITIONAL OPENINGS IN THE STORMWATER MANAGEMENT DRAINAGE STRUCTURE TO BE PROVIDED WHEN SPECIFIED ON THE PLANS.

APPROXIMATE QUANTITIES
CAST-IN-PLACE CLASS A(AE)(F'C - 3000 PSI)
CONCRETE TO BE USED.
MAXIMUM DEPTH (H) TO BE 12'-8".

PIPE SIZE	12"	15"	18"	24"	30"	36"	42"
MINIMUM DEPTH H	5'-0"	5'-3¼"	5'-6½"	6'-1"	6'-7½"	7'-2"	7'-8½"
CU. YDS. CONCRETE	2.665	2.773	2.878	3.078	3.624	3.437	3.598

INCREMENT PER FOOT OF ADDITIONAL DEPTH "H" - 0.461 CU. YDS.

SHEET 1 OF 2

SPECIFICATION REFERENCE
302

CAST IN PLACE STORMWATER MANAGEMENT DRAINAGE STRUCTURE

REV. 3/03
116.01

SHEET 1 OF 2

U.S. DEPARTMENT OF TRANSPORTATION
FEDERAL HIGHWAY ADMINISTRATION
EASTERN FEDERAL LANDS HIGHWAY DIVISION

DETAIL

STORMWATER MANAGEMENT DRAINAGE STRUCTURE

DETAIL APPROVED FOR USE --/----
REVISED:

DETAIL
E604-D

6/16/2008 10:47:42 AM C:\PWworking\PITT\dms8108\Detail_SWM-1.dgn

REG	STATE	PROJECT	SHEET NO.
-	VA	VA-A-AD-4B(1)	S48

SWM-1

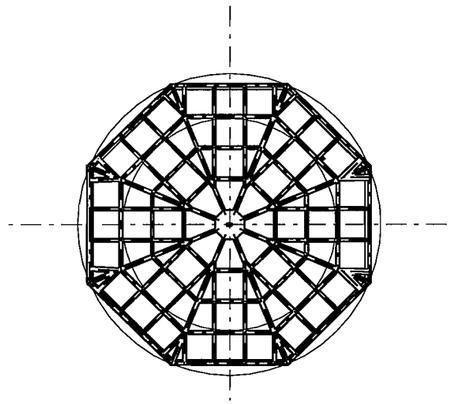

PLAN VIEW

NOTES:

1. COST OF TRASH RACK AND DEBRIS RACK ARE TO BE INCLUDED IN THE PRICE BID FOR THE STORMWATER MANAGEMENT DRAINAGE STRUCTURE.
2. STRUCTURE MAY BE PRECAST OR CAST IN PLACE. SEE SHEET 1 OF 2 FOR DETAILS ON CAST IN PLACE STRUCTURE.
3. WEEP HOLES SHALL NOT BE PROVIDED. ANY LIFT HOLES SHALL BE PLUGGED.
4. STEPS ARE TO BE PROVIDED WHEN HEIGHT OF STRUCTURE IS 4'-0" OR GREATER ABOVE INVERT OF OUTLET PIPE. FOR STEP DETAILS SEE STANDARD E604-J.
5. SEE STANDARD SWM-DR FOR DETAILS ON PLATE, DEBRIS RACK AND TRASH RACK.
6. MARK HEIGHT OF STRUCTURE, IN BLACK, WITH 4" HIGH NUMERALS AND 1" WIDE HORIZONTAL STRIPES AT 1' INTERVALS FROM INVERT OF WATER QUALITY ORIFICE (ALL VISIBLE SIDES).
7. THE PERMANENT STORMWATER MANAGEMENT DRAINAGE STRUCTURE, STANDARD SWM-1 MAY BE MODIFIED WHERE THE STORMWATER MANAGEMENT BASIN IS TO BE USED AS A TEMPORARY SEDIMENT BASIN DURING PROJECT CONSTRUCTION. SEE STANDARD SWM-DR, SHEET 1 OF 5 FOR TEMPORARY MODIFICATION DETAILS.
8. THE SIZE OF THE WATER QUALITY ORIFICE SHALL BE SPECIFIED ON THE PLANS. ADDITIONAL OPENINGS IN THE STORMWATER MANAGEMENT DRAINAGE STRUCTURE TO BE PROVIDED WHEN SPECIFIED ON THE PLANS.

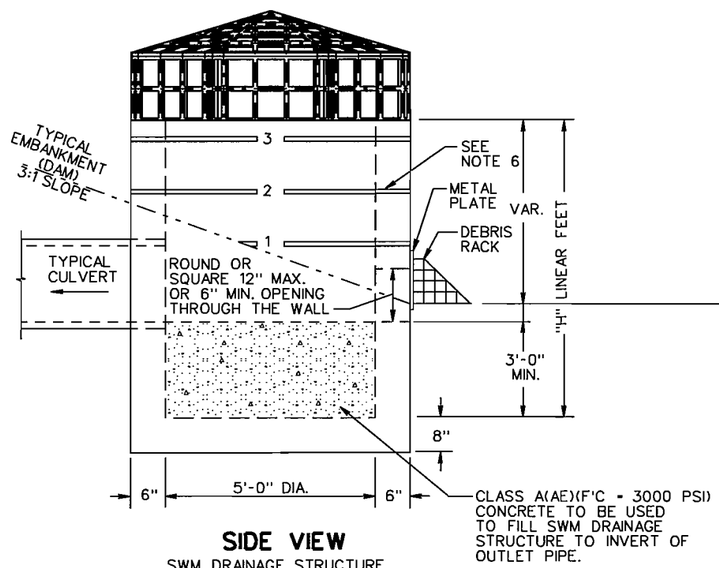

SIDE VIEW
SWM DRAINAGE STRUCTURE

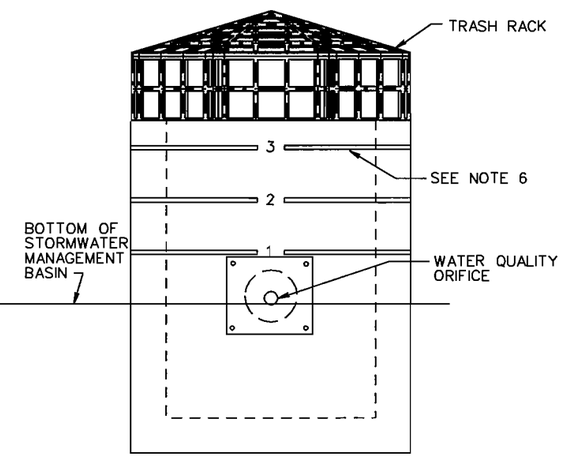

FRONT VIEW
(DEBRIS RACK NOT SHOWN)

SHEET 2 OF 2

PRECAST STORMWATER MANAGEMENT DRAINAGE STRUCTURE

REV. 3/03

116.02

SPECIFICATION REFERENCE
105 302

SHEET 2 OF 2

U.S. DEPARTMENT OF TRANSPORTATION
FEDERAL HIGHWAY ADMINISTRATION
EASTERN FEDERAL LANDS HIGHWAY DIVISION

DETAIL

STORMWATER MANAGEMENT DRAINAGE STRUCTURE

DETAIL APPROVED FOR USE --/----

REVISED:

DETAIL
E604-D

6/16/2008 10:48:56 AM C:\PWworking\PITT\dms8108\Detail_SWM-2.dgn

REG	STATE	PROJECT	SHEET NO.
-	VA	VA-A-AD-48(1)	S49

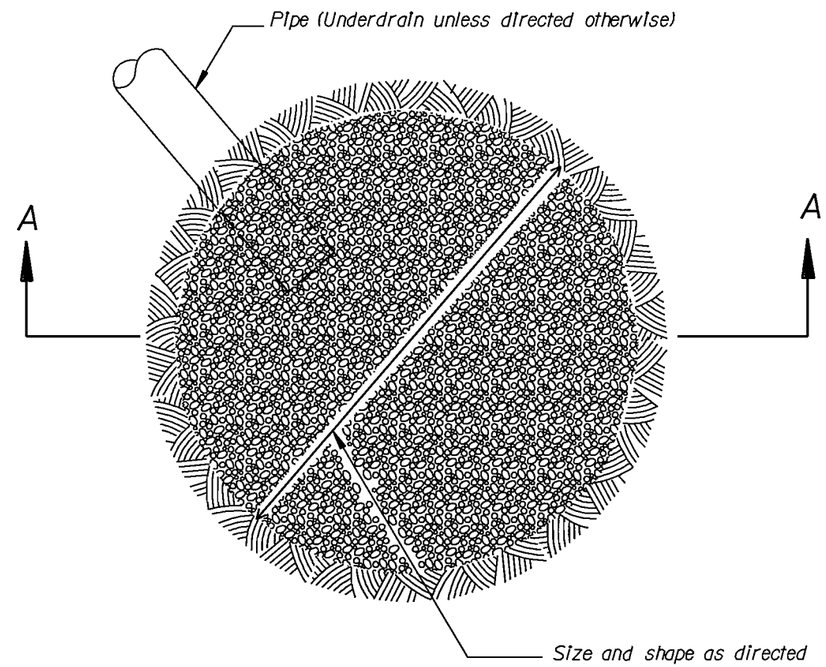

PLAN

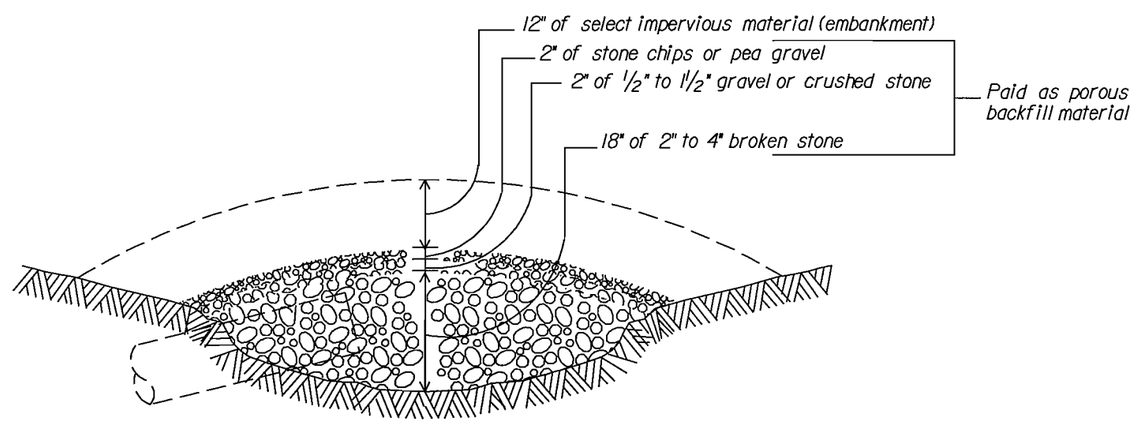

SECTION A-A

POROUS

U.S. DEPARTMENT OF TRANSPORTATION
FEDERAL HIGHWAY ADMINISTRATION
EASTERN FEDERAL LANDS HIGHWAY DIVISION

DETAIL

SPRING DRAIN

DETAIL APPROVED FOR USE --/----

REVISED:

DETAIL
E604-E

6/16/2008 10:52:22 AM C:\PWworking\PITT\dms81081\dt604x07.dgn

REG	STATE	PROJECT	SHEET NO.
-	VA	VA-A-AD-48(1)	S50

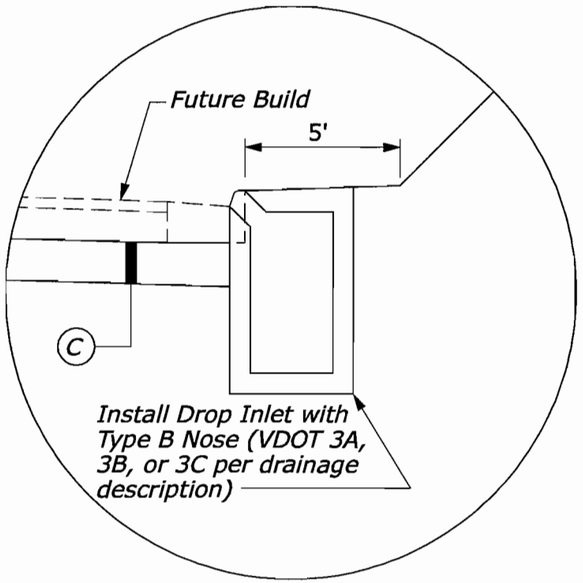

CURB DROP INLET DETAIL
(Cut section)

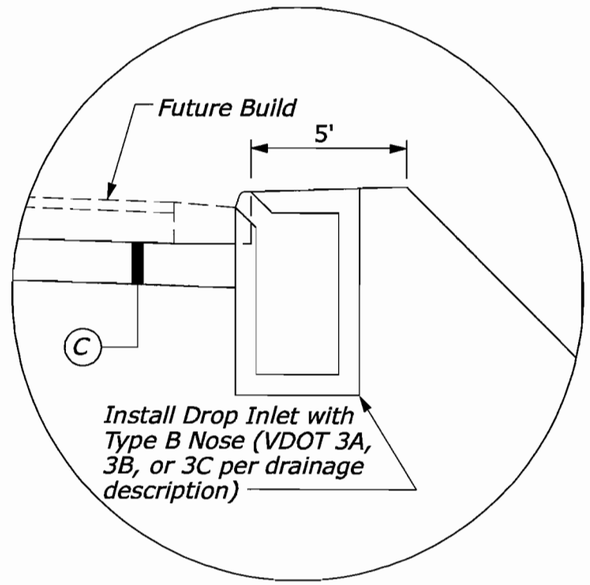

CURB DROP INLET DETAIL
(Fill section)

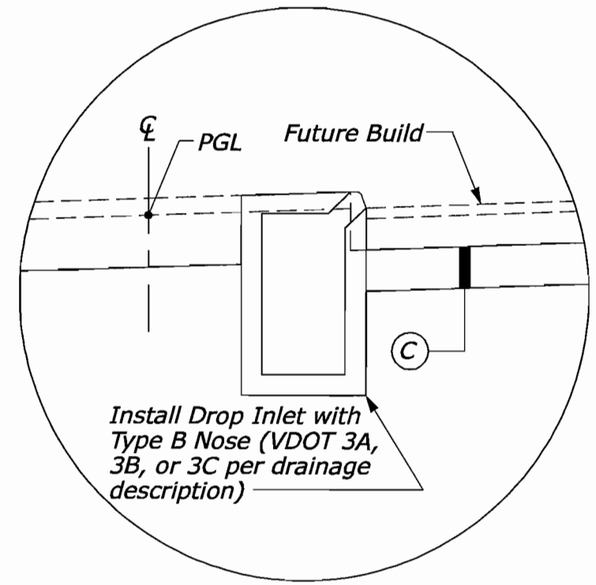

MEDIAN DROP INLET DETAIL

U.S. DEPARTMENT OF TRANSPORTATION
FEDERAL HIGHWAY ADMINISTRATION
EASTERN FEDERAL LANDS HIGHWAY DIVISION

DETAIL

CURB DROP INLETS

DETAIL APPROVED FOR USE --/----

REVISED:

DETAIL
E604-F

6/10/2008 1:54:05 PM c:\pwworking\plh\dms8108\Detail_Curb_Drop_Inlet.dgn

REG	STATE	PROJECT	SHEET NO.
-	VA	VA-A-AD-48(1)	S51

IS-1

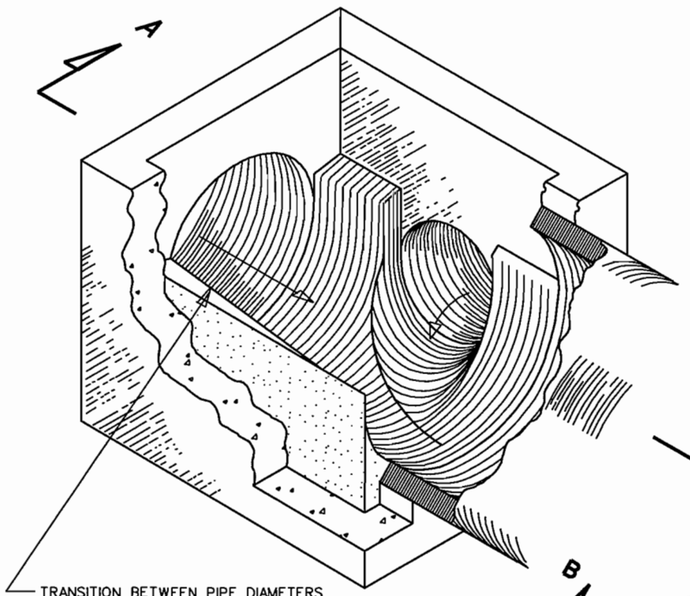

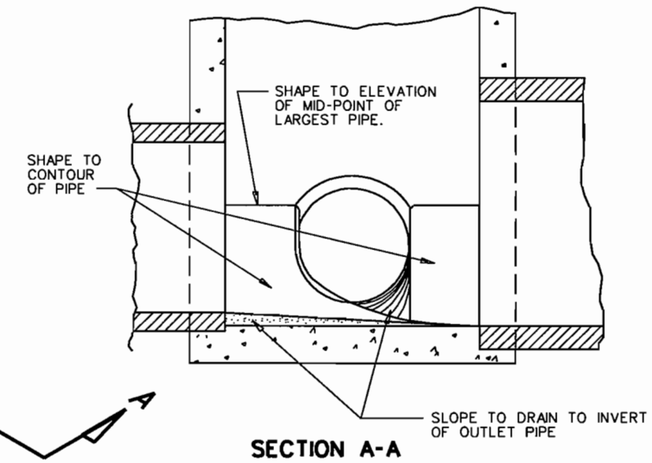

SECTION A-A

METHOD OF TREATMENT IN DROP INLETS

NOTES:
SHAPING OF MANHOLE AND INLET INVERTS IN ACCORDANCE WITH THIS DRAWING IS TO APPLY TO THOSE STRUCTURES SPECIFIED ON PLANS OR WHERE INVERT OF PIPE IS ABOVE INVERT OF STRUCTURE.

MANHOLE OR DROP INLET IS TO BE FORMED AND CONSTRUCTED IN ACCORDANCE WITH APPLICABLE STANDARD OR SPECIAL DRAWING. THE INVERT SHAPING AS DETAILED HEREON IS TO CONSIST OF A PORTLAND CEMENT CONCRETE MIX CONFORMING TO CLASS A3 OR CLASS C1, EXCEPT THAT 25% OF COARSE AGGREGATE MAY BE UP TO 4" IN DIAMETER AND CONSIST OF STONE, BROKEN BRICK, BROKEN CONCRETE OR BROKEN CONCRETE BLOCK. THE SURFACE SHALL BE LEFT SMOOTH BY MEANS OF HAND TROWELLING. NONE OF THE COARSE AGGREGATE SHALL REMAIN EXPOSED.

DETAILS OF INVERT SHAPING AS SHOWN HEREON ARE FOR EXAMPLE PURPOSES ONLY. EACH MANHOLE OR DROP INLET IS TO BE SHAPED INDIVIDUALLY TO BEST FIT THE PARTICULAR INLET AND OUTLET CONFIGURATION AND FLOW LINES.

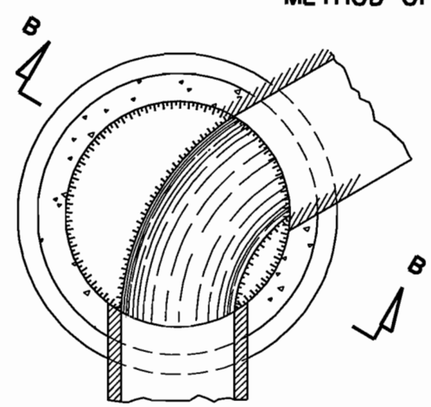

PLAN

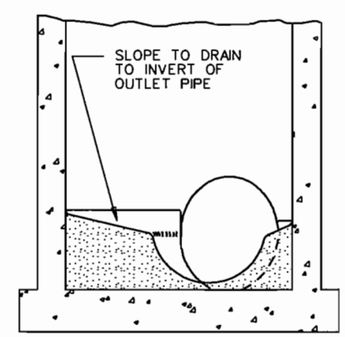

SECTION B-B

METHOD OF TREATMENT IN MANHOLES

SPECIFICATION REFERENCE
302

STANDARD METHOD OF SHAPING MANHOLE & INLET INVERTS

106.08

U.S. DEPARTMENT OF TRANSPORTATION
FEDERAL HIGHWAY ADMINISTRATION
EASTERN FEDERAL LANDS HIGHWAY DIVISION

DETAIL

STANDARD METHOD OF SHAPING MANHOLE & INLET INVERTS

DETAIL APPROVED FOR USE --/----

REVISED:

DETAIL
E604-G

6/16/2008 10:56:49 AM C:\PWworking\PITT\dms8108\DETAIL_IS-1.dgn

REG	STATE	PROJECT	SHEET NO.
-	VA	VA-A-AD-48(1)	S52

SL-1

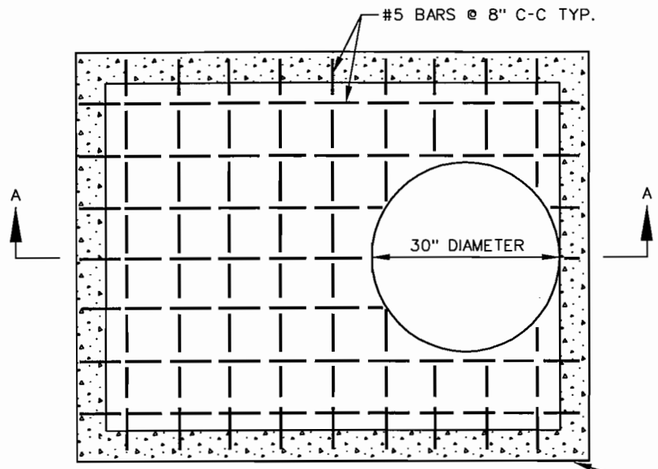

PLAN

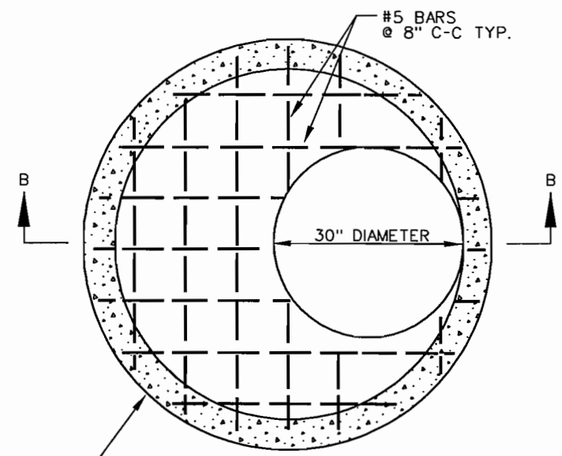

PLAN

STRUCTURE SIZE AND WALL THICKNESS VARIES

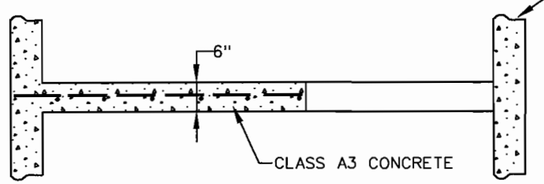

SECTION A-A

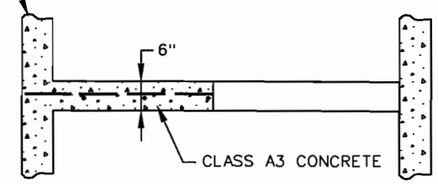

SECTION B-B

NOTES:

1. STANDARD SL-1, MANHOLE SAFETY SLAB, IS REQUIRED AS PART OF THE DRAINAGE DESIGN FOR MANHOLES, JUNCTION BOXES AND DROP INLETS WITH HEIGHTS GREATER THAN 12 FEET. THE SPACING OF ADJACENT SAFETY SLABS SHALL BE 8' TO 12' WITH NO SAFETY SLAB LOCATED WITHIN 6 FEET OF THE TOP OR BOTTOM OF THE STRUCTURE. SAFETY SLABS SHALL NOT BE LOCATED BELOW ANY INLET PIPE OF 30" DIAMETER OR GREATER.
2. THE COST OF THE SL-1 IS INCLUDED IN THE COST OF THE STRUCTURE.
3. ACCESS OPENINGS ARE TO BE STAGGERED FROM ONE SIDE OF STRUCTURE TO THE OTHER WHERE APPLICABLE. STEPS ARE TO BE STAGGERED ACCORDINGLY.
4. SAFETY SLAB MAY BE CAST-IN-PLACE OR PRECAST. CAST-IN-PLACE CONCRETE TO BE CLASS A3 (3000 PSI). PRECAST CONCRETE IS TO BE A4 (4000 PSI). REINFORCING STEEL TO BE IN ACCORDANCE WITH AASHTO M31.
5. ACCESS OPENINGS MAY BE 30" DIAMETER OR 30" SQUARE. WHEN STRUCTURE WIDTH IS LESS THAN 30" THE ACCESS OPENING SHALL BE RECTANGULAR (STRUCTURE WIDTH BY 30" LONG).

SEE CAST IN PLACE DRAWINGS
FOR FURTHER DETAILS

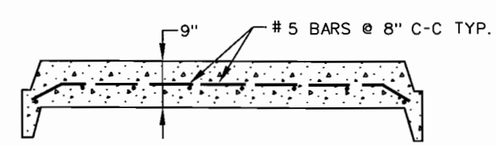

TYPICAL PRECAST UNIT

SPECIFICATION REFERENCE
302

TYPICAL CONCRETE SAFETY SLAB FOR DROP INLETS, MANHOLES AND JUNCTION BOXES

REV. 7/05

106.14

U.S. DEPARTMENT OF TRANSPORTATION
FEDERAL HIGHWAY ADMINISTRATION
EASTERN FEDERAL LANDS HIGHWAY DIVISION

DETAIL
TYPICAL CONCRETE SAFETY SLAB FOR DROP INLETS, MANHOLES AND JUNCTION BOXES

DETAIL APPROVED FOR USE --/----
REVISED:

DETAIL
E604-H

6/16/2009 11:00:39 AM C:\PWworking\PITT\dms8108\Detail_SL-1.dgn

REG	STATE	PROJECT	SHEET NO.
-	VA	VA-A-AD-48(1)	S53

ST-1

NO. 6 GALVANIZED STEEL STEP

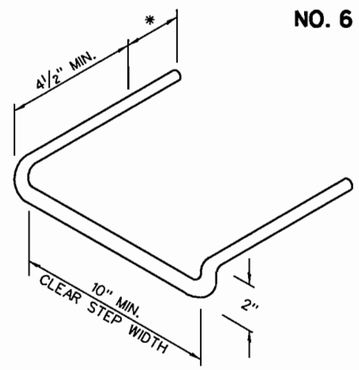

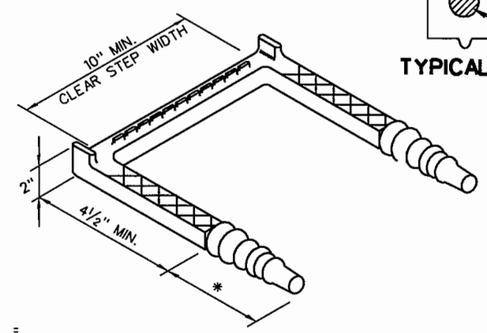

#4, GRADE 60, REINFORCING ROD ENCASED IN A CORROSION RESISTANT RUBBER OR OTHER MATERIAL APPROVED BY THE ENGINEER.
(DIMENSION MAY VARY WITH MANUFACTURER'S DESIGN)

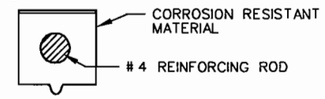

TYPICAL SECTION

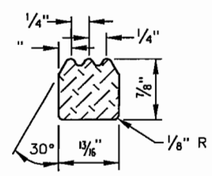

TYPICAL SECTION
(DIMENSIONS MAY VARY WITH MANUFACTURER'S DESIGN)

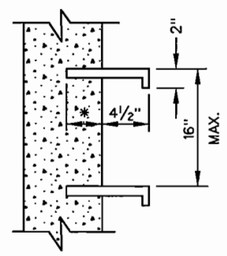

* MINIMUM OF 3" EMBEDMENT

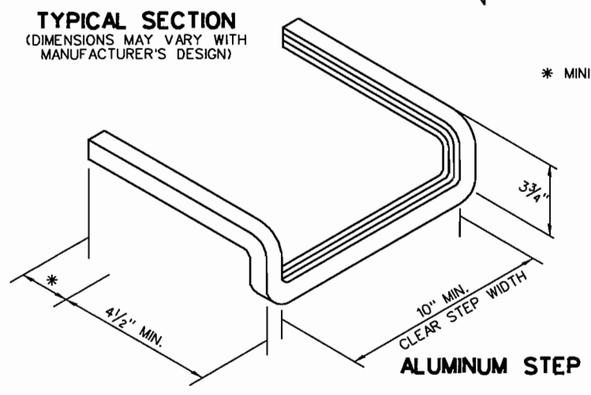

ALUMINUM STEP

NOTES:
STEPS WILL BE REQUIRED IN ALL STRUCTURES WITH A DEPTH OF 4'-0" OR GREATER UNLESS OTHERWISE NOTED ON THE PLANS.

ALL STEPS SHALL PROTRUDE 4½" FROM INSIDE FACE OF STRUCTURE WALL.

MAXIMUM STEP SPACING TO BE 16" C-C.

STEPS SHALL WITHSTAND A MINIMUM FORCE OF 300 POUNDS WHEN EXTENDED 4½" FROM THE FACE OF THE SUPPORT.

STEPS ARE TO BE VERTICALLY ALIGNED AND UNIFORMALY SPACED FOR THE ENTIRE DEPTH OF ANY STRUCTURE.

IN PRECAST UNITS STEPS MAY BE CAST IN PLACE, MORTARED INTO HOLES PROVIDED BY THE FABRICATOR, OR DRIVEN.

STEPS DIFFERING IN DIMENSIONS, CONFIGURATION, OR MATERIALS FROM THOSE SHOWN MAY ALSO BE USED PROVIDED THEY MEET THE MINIMUM REQUIREMENTS SHOWN HEREON AND THE CONTRACTOR HAS FURNISHED THE ENGINEER WITH DETAILS AND CERTIFIED TEST REPORTS OF THE PROPOSED SUBSTITUTE AND HAS RECEIVED WRITTEN APPROVAL FROM THE ENGINEER FOR THE USE OF SUCH STEPS.

ALL STEPS INSTALLED SHALL BE PROVIDED WITH SLIP-RESISTANT SURFACES SUCH AS BUT NOT LIMITED TO, CORRUGATED KNURLED, OR DIMPLED SURFACES.

ALUMINUM STEPS SHALL BE FABRICATED IN ACCORDANCE WITH ASTM B221, ALLOY 6005-T5.
THAT PORTION OF THE STEP ENCASED IN MASONRY SHALL BE UNIFORMLY COATED WITH A BITUMIMOUS, SOLVENT TYPE, ASBESTOS FILLED ALUMINUM PIGMENTED COATING CONFORMING TO FEDERAL SPECIFICATION TC-C-00498A.

STANDARD STEP

SPECIFICATION REFERENCE
NONE

106.09

U.S. DEPARTMENT OF TRANSPORTATION
FEDERAL HIGHWAY ADMINISTRATION
EASTERN FEDERAL LANDS HIGHWAY DIVISION

DETAIL

STANDARD STEP

DETAIL APPROVED FOR USE --/----
REVISED:

DETAIL
E604-J

5/15/2008 11:03:02 AM C:\PWworking\FITT\dms81081\Detail_ST-1.dgn

REG	STATE	PROJECT	SHEET NO.
-	VA	VA-A-AD-48(1)	S54

DI-3A,3B,3C

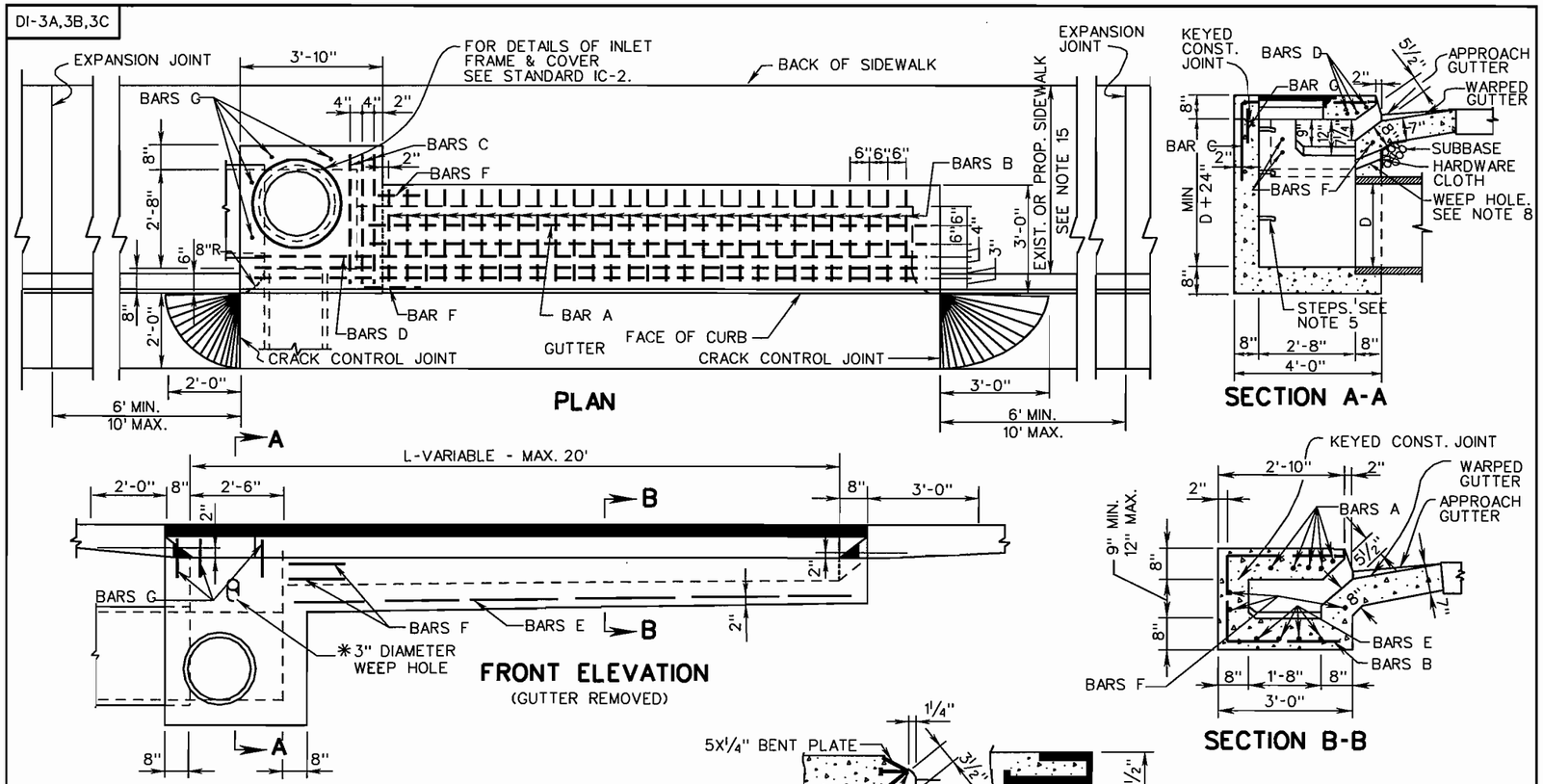

TYPE A NOSE DETAIL SHALL BE USED WITH CONCRETE CURB AND GUTTER (VDOT CG-3 & CG-7) STANDARDS.

TYPE B NOSE DETAIL SHALL BE USED WITH CONCRETE CURB (VDOT CG-2) STANDARDS.

GALVANIZED PLATE FOR TYPE A TO BE BENT ON AN ANGLE OF 68° 30' CONNECTORS AND IS TO BE ANCHORED WITH 1/2" X 4" STUD SHEAR WELDED TO BENT PLATE AT 2'C-C.

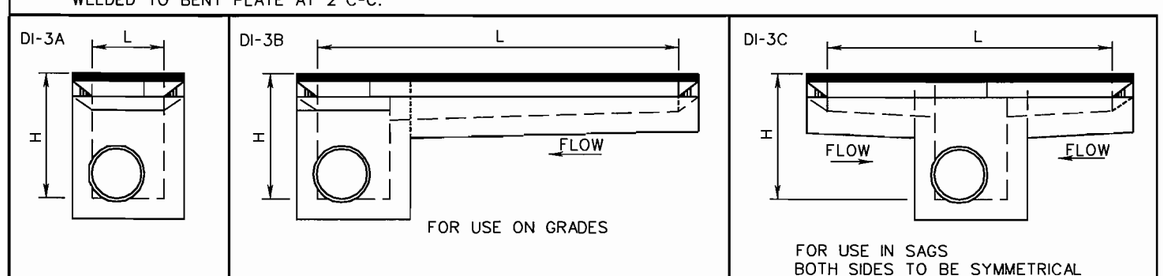

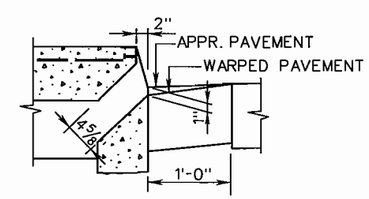

DETAIL WHEN USED ADJACENT TO CURB WITHOUT GUTTER

SHEET 1 OF 2

STANDARD CURB DROP INLET
12" - 30" PIPE: MAXIMUM DEPTH (H) = 8'

104.09

SPECIFICATION REFERENCE
233
302

SHEET 1 OF 2

U.S. DEPARTMENT OF TRANSPORTATION
FEDERAL HIGHWAY ADMINISTRATION
EASTERN FEDERAL LANDS HIGHWAY DIVISION

DETAIL

STANDARD CURB DROP INLET

DETAIL APPROVED FOR USE --/----

REVISED:

DETAIL E604-K

6/16/2008 11:04:31 AM C:\PWworking\PITT\dms81081\Detail_DI-3A.dgn

DI-3A,3B,3C

TABLE OF QUANTITIES

TYPE	L	AREA OF SLOT	REINFORCING STEEL															
			Concrete	BARS A		BARS B		BARS C		BARS D		BARS E		BARS F		BARS G		WEIGHT
	Ft.	Sq. Ft.	Cu. Yds.	No.	Lin. Ft. ✳	No.	Lin. Ft. ✳	No.	Lin. Ft. ✳	No.	Lin. Ft.✳	No.	Lin. Ft.✳	No.	Lin. Ft.✳	No.	Lin. Ft.✳	Lbs.
DI-3A	2'-6"	1.15	2.26	-	-	-	-	1	5'-7"	3	3'-2"	-	-	-	-	6	1'-0"	22
DI-3B	4'	1.83	2.59	5	1'-6"	2	6'-7" to 6'-10"	3	5'-7"	3	3'-2"	4	1'-6"	3	1'-6"	4	1'-0"	64
	6'	2.75	3.02	5	3'-6"	6	6'-7" to 6'-10"	3	5'-7"	3	3'-2"	4	3'-6"	3	1'-6"	4	1'-0"	111
	8'	3.67	3.46	5	5'-6"	10	6'-7" to 6'-10"	3	5'-7"	3	3'-2"	4	5'-6"	3	1'-6"	4	1'-0"	158
	10'	4.58	3.90	5	7'-6"	14	6'-7" to 6'-10"	3	5'-7"	3	3'-2"	4	7'-6"	3	1'-6"	4	1'-0"	204
	12'	5.50	4.34	5	9'-6"	18	6'-7" to 6'-10"	3	5'-7"	3	3'-2"	4	9'-6"	3	1'-6"	4	1'-0"	251
	14'	6.42	4.78	5	11'-6"	22	6'-7" to 6'-10"	3	5'-7"	3	3'-2"	4	11'-6"	3	1'-6"	4	1'-0"	298
	16'	7.33	5.22	5	13'-6"	26	6'-7" to 6'-10"	3	5'-7"	3	3'-2"	4	13'-6"	3	1'-6"	4	1'-0"	345
	18'	8.25	5.66	5	15'-6"	30	6'-7" to 6'-10"	3	5'-7"	3	3'-2"	4	15'-6"	3	1'-6"	4	1'-0"	391
	20'	9.17	6.09	5	17'-6"	34	6'-7" to 6'-10"	3	5'-7"	3	3'-2"	4	17'-6"	3	1'-6"	4	1'-0"	438
DI-3C	6'	2.75	3.01	10	1'-9"	4	6'-7" to 6'-10"	5	5'-7"	3	3'-2"	8	1'-9"	6	1'-6"	2	1'-0"	111
	8'	3.67	3.45	10	2'-9"	8	6'-7" to 6'-10"	5	5'-7"	3	3'-2"	8	2'-9"	6	1'-6"	2	1'-0"	158
	10'	4.58	3.89	10	3'-9"	12	6'-7" to 6'-10"	5	5'-7"	3	3'-2"	8	3'-9"	6	1'-6"	2	1'-0"	205
	12'	5.50	4.33	10	4'-9"	16	6'-7" to 6'-10"	5	5'-7"	3	3'-2"	8	4'-9"	6	1'-6"	2	1'-0"	252
	14'	6.42	4.77	10	5'-9"	20	6'-7" to 6'-10"	5	5'-7"	3	3'-2"	8	5'-9"	6	1'-6"	2	1'-0"	298
	16'	7.33	5.21	10	6'-9"	24	6'-7" to 6'-10"	5	5'-7"	3	3'-2"	8	6'-9"	6	1'-6"	2	1'-0"	345
	18'	8.25	5.65	10	7'-9"	28	6'-7" to 6'-10"	5	5'-7"	3	3'-2"	8	7'-9"	6	1'-6"	2	1'-0"	392
	20'	9.17	6.09	10	8'-9"	32	6'-7" to 6'-10"	5	5'-7"	3	3'-2"	8	8'-9"	6	1'-6"	2	1'-0"	439

NOTES

1. DEPTH OF INLET (H) TO BE SHOWN ON PLANS.
2. THE "H" DIMENSION SHOWN ON THE STANDARDS AND SPECIFIED ON THE PLANS WILL BE MEASURED FROM THE INVERT OF THE OUTFALL PIPE TO THE TOP OF THE STRUCTURE. PLAN "H" DIMENSIONS ARE APPROXIMATE ONLY FOR ESTIMATING PURPOSES AND THE ACTUAL DIMENSIONS SHALL BE DETERMINED BY THE CONTRACTOR FROM FIELD CONDITIONS.
3. WHEN SPECIFIED ON THE PLANS THE INVERT IS TO BE SHAPED IN ACCORDANCE WITH STANDARD IS-1. THE COST OF FURNISHING AND PLACING ALL MATERIALS INCIDENTAL TO THE SHAPING IS TO BE INCLUDED IN THE BID PRICE FOR THE STRUCTURE.
4. IN THE EVENT THE INVERT OF THE OUTFALL PIPE IS HIGHER THAN THE BOTTOM OF THE STRUCTURE, THE INVERT OF THE STRUCTURE SHALL BE SHAPED WITH CEMENT MORTAR TO PREVENT STANDING OR PONDING OF WATER IN THE STRUCTURE. THE COST OF FURNISHING AND PLACING ALL MATERIALS INCIDENTAL TO THE SHAPING IS TO BE INCLUDED IN THE BID PRICE FOR THE STRUCTURE.
5. STEPS ARE TO BE PROVIDED WHEN H IS 4'-0" OR GREATER. SEE DETAIL E604-J.
6. THIS ITEM MAY BE PRECAST OR CAST-IN-PLACE.
7. #4 X 8" SMOOTH DOWELS AT APPROXIMATELY 12" C-C TO BE PLACED IN ALL AREAS ADJACENT TO ABUTTING CONCRETE TO PREVENT SETTLEMENT.
8. 3" DIAMETER WEEP HOLE TO BE LOCATED TO DRAIN SUBBASE MATERIAL. WEEP HOLE WITH 12"X12" PLASTIC HARDWARE CLOTH 1/4" MESH OR GALVANIZED STEEL WIRE, MINIMUM WIRE DIAMETER 0.03", NUMBER 4 MESH HARDWARE CLOTH ANCHORED FIRMLY TO THE OUTSIDE OF THE STRUCTURE.
9. ALL REINFORCING STEEL SHALL HAVE A MIN. COVER OF 2".
10. ALL REINFORCING STEEL TO BE CUT CLEAR OF ALL OPENINGS BY 2".
11. CAST-IN PLACE CONCRETE IS TO BE REINFORCED CONC. CLASS A, f'c=3000 PSI. PRECAST CONCRETE IS TO BE 4000 PSI.
12. LENGTH OF SLOT (L) WILL, IN EVERY CASE, BE SHOWN ON PLANS.
13. IF INLET IS CONSTRUCTED IN MEDIAN CURB OR WITH INTEGRAL CURB, GUTTER IS TO BE OMITTED (SEE DETAIL).
14.
15. THIS AREA MAY BE EARTHEN, IN WHICH CASE THE EXPANSION JOINTS WILL APPLY ONLY TO CURB AND GUTTER.
16. CONCRETE QUANTITIES SHOWN ARE FOR DEPTH (H) OF 5'-2" WITHOUT PIPES. THE AMOUNT DISPLACED BY PIPES MUST BE DEDUCTED TO OBTAIN TRUE QUANTITIES. FOR INLETS OF DIFFERENT DEPTHS ADD OR SUBTRACT 0.32 CUBIC YARDS OF CONCRETE FOR EACH FOOT OF DEPTH.
17. LENGTH OF ANGLE IRON AS SHOWN ON SHEET 1 OF 2 IS TO BE L +16" AT 4.10 LBS./FT..
18. ✳ DENOTES LENGTH OF ONE (1) BAR.
19. ALL REINFORCING BARS TO BE #5.
20. WHEN INLET IS USED IN 4'-0" MEDIAN, BACK OF INLET IS TO BE SHAPED TO CONFORM TO PROPOSED CURB.

Sheet 2 of 2

SPECIFICATION REFERENCE
233
302

STANDARD CURB DROP INLET
12" - 30" PIPE: MAXIMUM DEPTH (H) = 8'

104.10

SHEET 2 OF 2

U.S. DEPARTMENT OF TRANSPORTATION
FEDERAL HIGHWAY ADMINISTRATION
EASTERN FEDERAL LANDS HIGHWAY DIVISION

DETAIL

STANDARD CURB DROP INLET

DETAIL APPROVED FOR USE --/----

REVISED:

DETAIL
E604-K

6/16/2008 11:08:47 AM C:\PWworking\PITT\dms81081\Detail_DI-3A-2.dgn

REG	STATE	PROJECT	SHEET NO.
-	VA	VA-A-AD-4B(1)	S56

DI-4A,4B,4C

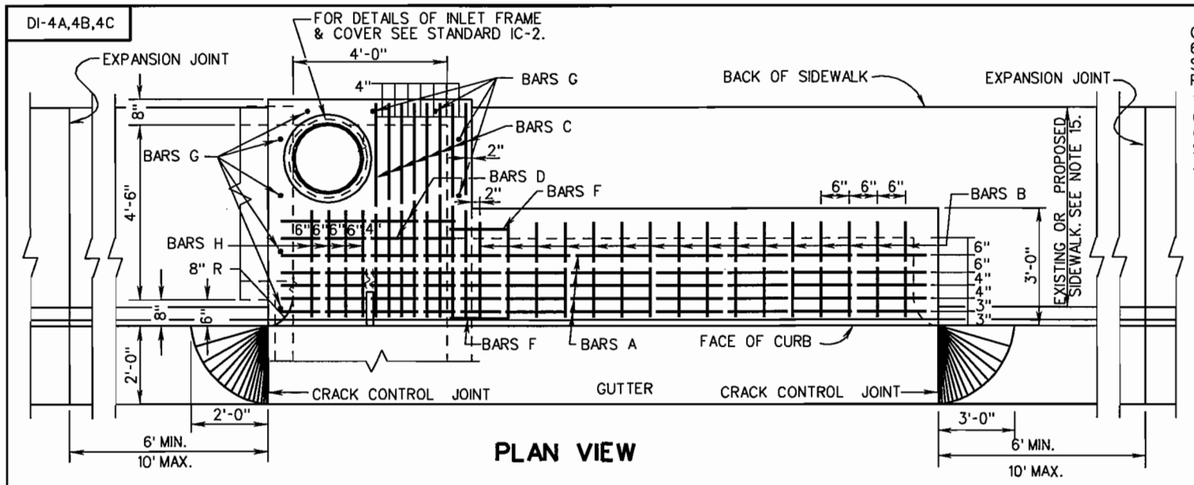

PLAN VIEW

GALVANIZED PLATE TO BE BENT ON AN ANGLE OF 68° 30' AND IS TO BE ANCHORED WITH 1/2" X 4" STUD SHEAR CONNECTORS WELDED TO BENT PLATE AT 2'-0" C-C.

TYPE A NOSE DETAIL SHALL BE USED WITH CONC. CURB (MOUNTABLE) & CONC. CURB AND GUTTER (MOUNTABLE) STANDARDS. TYPE B NOSE DETAIL SHALL BE USED WITH CONC. CURB & CONC. CURB AND GUTTER STANDARDS.

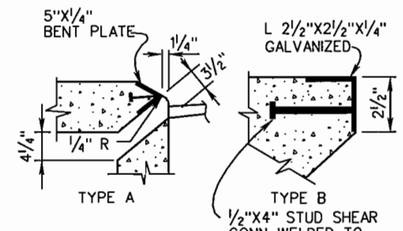

NOSE DETAILS

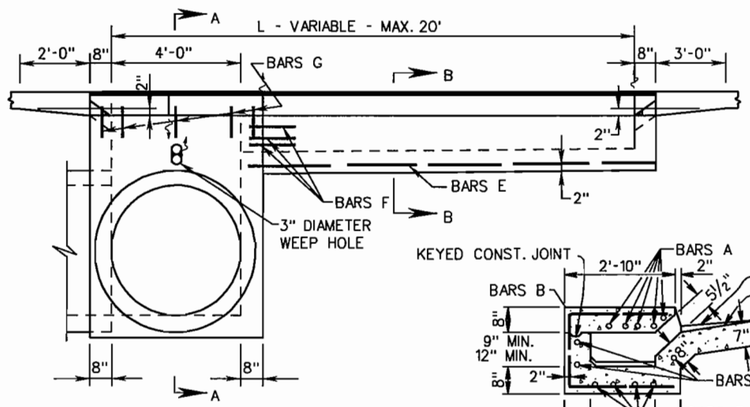

FRONT ELEVATION VIEW
(GUTTER REMOVED)

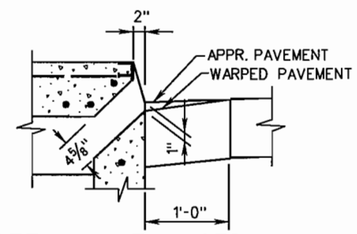

DETAIL WHEN USED ADJACENT TO CURB WITHOUT GUTTER

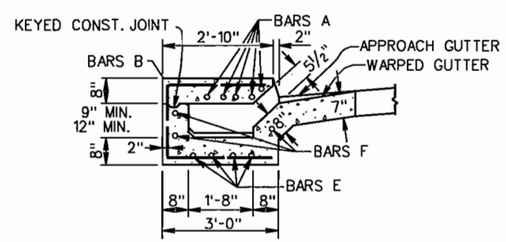

SECTION B-B

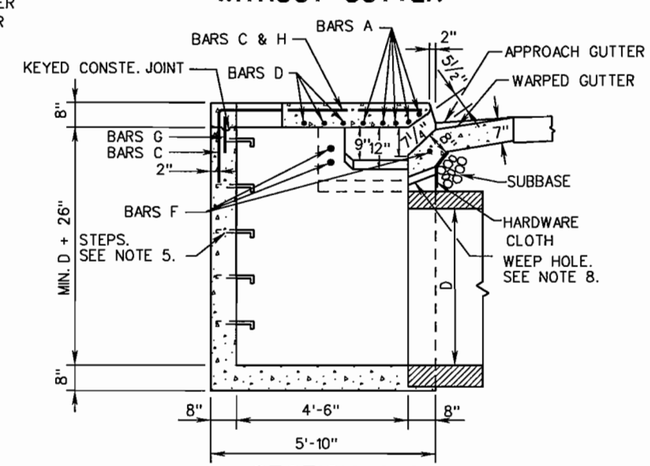

SECTION A-A

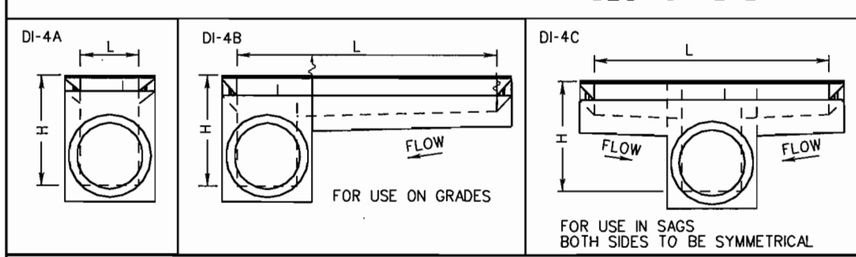

SHEET 1 OF 2

STANDARD CURB DROP INLET
36" - 48" PIPE: MAXIMUM DEPTH (H) = 8'

104.15

SPECIFICATION REFERENCE
233
302

SHEET 1 OF 2

U.S. DEPARTMENT OF TRANSPORTATION
FEDERAL HIGHWAY ADMINISTRATION
EASTERN FEDERAL LANDS HIGHWAY DIVISION

DETAIL

STANDARD CURB DROP INLET

DETAIL APPROVED FOR USE --/----

REVISED:

DETAIL
E604-L

6/16/2008 11:10:17 AM C:\PWworking\PITT\dms81081\Detail_E604-1.dgn

REG	STATE	PROJECT	SHEET NO.
-	VA	VA-A-AD-48(1)	S57

TABLE OF QUANTITIES

DI-4A,4B,4C

TYPE	L Ft.	AREA OF SLOT Sq. Ft.	Concrete Cu. Yds.	REINFORCING STEEL																		WEIGHT
				BARS A		BARS B		BARS C		BARS D		BARS E		BARS F		BARS G		BARS H		
				No.	Lin. Ft. *	No.	Lin. Ft. *	No.	Lin. Ft. *	No.	Lin. Ft. *	No.	Lin. Ft. *	No.	Lin. Ft. *	No.	Lin. Ft. *	No.	Lin. Ft. *	Lbs.
DI-4A	4'	1.83	4.65	5	4'-8"	-	-	6	7'-6"	2	4'-8"	-	-	-	-	11	1'-0"	4	2'-8"	104
DI-4B	6'	2.75	5.07	5	6'-8"	3	6'-7" to 6'-10"	8	7'-6"	2	4'-8"	4	2'-0"	3	1'-6"	9	1'-0"	4	2'-8"	162
	8'	3.67	5.51	5	8'-8"	7	6'-7" to 6'-10"	8	7'-6"	2	4'-8"	4	4'-0"	3	1'-6"	9	1'-0"	4	2'-8"	209
	10'	4.58	5.96	5	10'-8"	11	6'-7" to 6'-10"	8	7'-6"	2	4'-8"	4	6'-0"	3	1'-6"	9	1'-0"	4	2'-8"	256
	12'	5.50	6.40	5	12'-8"	15	6'-7" to 6'-10"	8	7'-6"	2	4'-8"	4	8'-0"	3	1'-6"	9	1'-0"	4	2'-8"	302
	14'	6.42	6.85	5	14'-8"	19	6'-7" to 6'-10"	8	7'-6"	2	4'-8"	4	10'-0"	3	1'-6"	9	1'-0"	4	2'-8"	349
	16'	7.33	7.30	5	16'-8"	23	6'-7" to 6'-10"	8	7'-6"	2	4'-8"	4	12'-0"	3	1'-6"	9	1'-0"	4	2'-8"	396
	18'	8.25	7.74	5	18'-8"	27	6'-7" to 6'-10"	8	7'-6"	2	4'-8"	4	14'-0"	3	1'-6"	9	1'-0"	4	2'-8"	443
	20'	9.17	8.19	5	20'-8"	31	6'-7" to 6'-10"	8	7'-6"	2	4'-8"	4	16'-0"	3	1'-6"	9	1'-0"	4	2'-8"	489
DI-4C	8'	3.67	5.48	5	8'-8"	6	6'-7" to 6'-10"	10	7'-6"	2	4'-8"	8	2'-0"	6	1'-6"	7	1'-0"	4	2'-8"	220
	10'	4.58	5.92	5	10'-8"	10	6'-7" to 6'-10"	10	7'-6"	2	4'-8"	8	3'-0"	6	1'-6"	7	1'-0"	4	2'-8"	267
	12'	5.50	6.37	5	12'-8"	14	6'-7" to 6'-10"	10	7'-6"	2	4'-8"	8	4'-0"	6	1'-6"	7	1'-0"	4	2'-8"	314
	14'	6.42	6.81	5	14'-8"	18	6'-7" to 6'-10"	10	7'-6"	2	4'-8"	8	5'-0"	6	1'-6"	7	1'-0"	4	2'-8"	360
	16'	7.33	7.26	5	16'-8"	22	6'-7" to 6'-10"	10	7'-6"	2	4'-8"	8	6'-0"	6	1'-6"	7	1'-0"	4	2'-8"	407
	18'	8.25	7.70	5	18'-8"	26	6'-7" to 6'-10"	10	7'-6"	2	4'-8"	8	7'-0"	6	1'-6"	7	1'-0"	4	2'-8"	454
	20'	9.17	8.15	5	20'-8"	30	6'-7" to 6'-10"	10	7'-6"	2	4'-8"	8	8'-0"	6	1'-6"	7	1'-0"	4	2'-8"	501

NOTES

1. DEPTH OF INLET (H) TO BE SHOWN ON PLANS.
2. THE "H" DIMENSION SHOWN ON THE STANDARDS AND SPECIFIED ON THE PLANS WILL BE MEASURED FROM THE INVERT OF THE OUTFALL PIPE TO THE TOP OF THE STRUCTURE. PLAN "H" DIMENSIONS ARE APPROXIMATE ONLY FOR ESTIMATING PURPOSES AND THE ACTUAL DIMENSIONS SHALL BE DETERMINED BY THE CONTRACTOR FROM FIELD CONDITIONS.
3. WHEN SPECIFIED ON THE PLANS THE INVERT IS TO BE SHAPED IN ACCORDANCE WITH STANDARD IS-1. THE COST OF FURNISHING AND PLACING ALL MATERIALS INCIDENTAL TO THE SHAPING IS TO BE INCLUDED IN THE BID PRICE FOR THE STRUCTURE.
4. IN THE EVENT THE INVERT OF THE OUTFALL PIPE IS HIGHER THAN THE BOTTOM OF THE STRUCTURE, THE INVERT OF THE STRUCTURE SHALL BE SHAPED WITH CEMENT MORTAR TO PREVENT STANDING OR PONDING OF WATER IN THE STRUCTURE. THE COST OF FURNISHING AND PLACING ALL MATERIALS INCIDENTAL TO THE SHAPING IS TO BE INCLUDED IN THE BID PRICE FOR THE STRUCTURE.
5. STEPS ARE TO BE PROVIDED WHEN H IS 4'-0" OR GREATER. FOR DETAILS SEE STANDARD ST-1.
6. THIS ITEM MAY BE PRECAST OR CAST-IN-PLACE.
7. # 4 X 8" SMOOTH DOWELS AT APPROXIMATELY 12" C-C TO BE PLACED IN ALL AREAS ADJACENT TO ABUTTING CONCRETE TO PREVENT SETTLEMENT.
8. 3" DIAMETER WEEP HOLE TO BE LOCATED TO DRAIN SUBBASE MATERIAL. WEEP HOLE WITH 12"X12" PLASTIC HARDWARE CLOTH 1/4" MESH OR GALVANIZED STEEL WIRE, MINIMUM WIRE DIAMETER 0.03", NUMBER 4 MESH HARDWARE CLOTH ANCHORED FIRMLY TO THE OUTSIDE OF THE STRUCTURE.
9. ALL REINFORCING STEEL SHALL HAVE A MIN. COVER OF 2".
10. ALL REINFORCING STEEL TO BE CUT CLEAR OF ALL OPENINGS BY 2".
11. CAST-IN PLACE CONCRETE IS TO BE REINFORCED CONC. CLASS A f'c=3000 PSI. PRECAST CONCRETE IS TO BE 4000 PSI
12. LENGTH OF SLOT (L) WILL IN EVERY CASE, BE SHOWN ON PLANS.
13. IF INLET IS CONSTRUCTED IN MEDIAN CURB OR WITH INTEGRAL CURB, GUTTER IS TO BE OMITTED (SEE DETAIL).
14. STANDARD INLETS MAY BE CONSTRUCTED WITH CONCRETE BLOCKS IN ACCORDANCE WITH THE DETAILS SHOWN ON STANDARD DRAWING DI-MB.
15. THIS AREA MAY BE EARTHEN, IN WHICH CASE THE EXPANSION JOINTS WILL APPLY ONLY TO CURB AND GUTTER.
16. CONCRETE QUANTITIES SHOWN ARE FOR DEPTH (H) OF 6'-10" WITHOUT PIPES. THE AMOUNT DISPLACED BY PIPES MUST BE DEDUCTED TO OBTAIN TRUE QUANTITIES. FOR INLETS OF DIFFERENT DEPTHS ADD OR SUBTRACT 0.49 CUBIC YARDS OF CONCRETE FOR EACH FOOT OF DEPTH.
17. LENGTH OF ANGLE IRON AS SHOWN ON SHEET 1 OF 2 IS TO BE L+16" AT 4.10 LBS./FT..
18. * DENOTES LENGTH OF ONE (1) BAR.
19. ALL REINFORCING BARS TO BE #5.

Sheet 2 of 2

SPECIFICATION REFERENCE
233 302

STANDARD CURB DROP INLET
36" - 48" PIPE: MAXIMUM DEPTH (H) = 8'

104.16

SHEET 2 OF 2

U.S. DEPARTMENT OF TRANSPORTATION
FEDERAL HIGHWAY ADMINISTRATION
EASTERN FEDERAL LANDS HIGHWAY DIVISION

DETAIL

STANDARD CURB DROP INLET

DETAIL APPROVED FOR USE --/----

REVISED:

DETAIL
E604-L

6/16/2008 11:11:35 AM C:\PWworking\PITT\dms81081\Detail_E604-2.dgn

REG	STATE	PROJECT	SHEET NO.
-	VA	VA-A-AD-48(1)	S58

DI-5

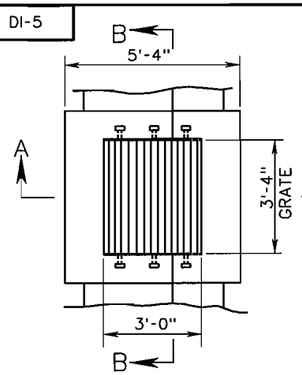

DITCH PLAN

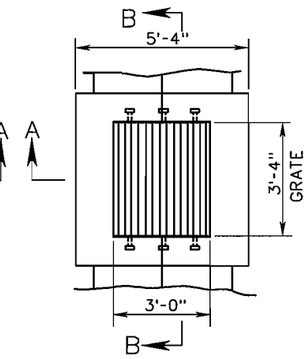

MEDIAN PLAN

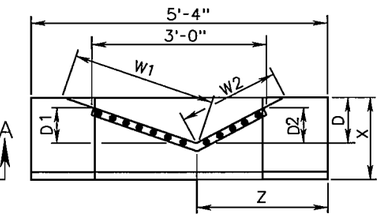

SECTION A-A

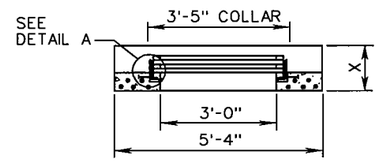

SECTION B-B

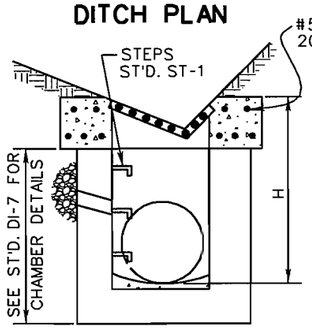

DITCH LINE SECTION

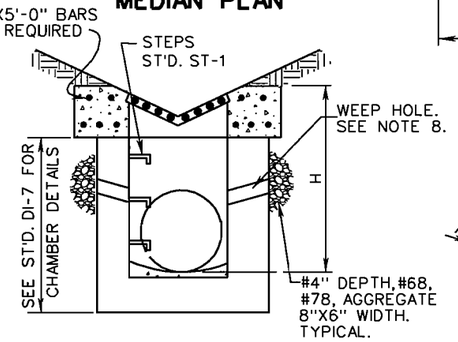

MEDIAN DITCH SECTION

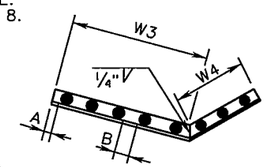

GRATE (GALVANIZED)

COLLAR DIMENSIONS TO BE 1/4" LARGER THAN GRATE DIMENSIONS W3 AND W4.

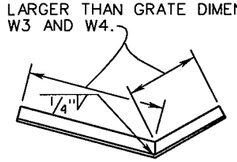

COLLAR (GALVANIZED)

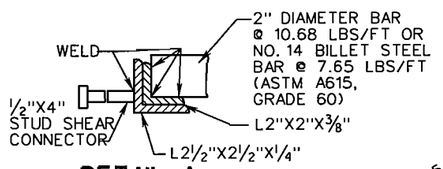

DETAIL A

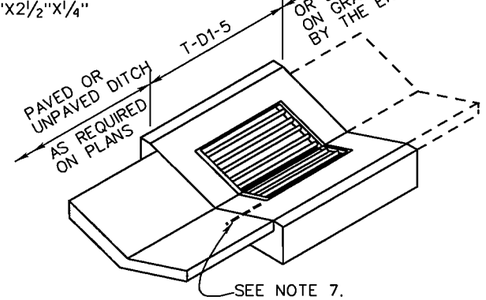

NOTES

1. DEPTH OF INLET (H) TO BE SHOWN ON PLANS.
2. THE "H" DIMENSION SHOWN ON THE STANDARDS AND SPECIFIED ON THE PLANS WILL BE MEASURED FROM THE INVERT OF THE OUTFALL PIPE TO THE TOP OF THE STRUCTURE. PLAN "H" DIMENSIONS ARE APPROXIMATE ONLY FOR ESTIMATING PURPOSES AND THE ACTUAL DIMENSIONS SHALL BE DETERMINED BY THE CONTRACTOR FROM FIELD CONDITIONS.
3. WHEN SPECIFIED ON THE PLANS THE INVERT IS TO BE SHAPED IN ACCORDANCE WITH STANDARD IS-1. THE COST OF FURNISHING AND PLACING ALL MATERIALS INCIDENTAL TO THE SHAPING IS TO BE INCLUDED IN THE BID PRICE FOR THE STRUCTURE.
4. IN THE EVENT THE INVERT OF THE OUTFALL PIPE IS HIGHER THAN THE BOTTOM OF THE STRUCTURE, THE INVERT OF THE STRUCTURE SHALL BE SHAPED WITH CEMENT MORTAR TO PREVENT STANDING OR PONDING OF WATER IN THE STRUCTURE. THE COST OF FURNISHING AND PLACING ALL MATERIALS INCIDENTAL TO THE SHAPING IS TO BE INCLUDED IN THE BID PRICE FOR THE STRUCTURE.
5. STEPS ARE TO BE PROVIDED WHEN H IS 4'-0" OR GREATER. FOR DETAILS SEE STANDARD ST-1.
6. CHAMBER MAY BE CAST IN PLACE, PRECAST, BRICK OR CONCRETE BLOCK. SEE DI-7 FOR DETAILS.
7. WHERE PAVED DITCHES ARE REQUIRED, JOINTS ARE TO BE DOWELED WITH #4 X 8" SMOOTH RODS AT APPROXIMATELY 12" C-C IN ALL AREAS ADJACENT TO ABUTTING CONCRETE TO PREVENT SETTLEMENT. IN LIEU OF DOWELS A 2" X 4" NOTCH MAY BE PROVIDED. SEE ST'D T-DI-3, 4 FOR ALTERNATE DESIGN.
8. 3" DIAMETER WEEP HOLE TO BE LOCATED TO DRAIN SUBBASE MATERIAL. WEEP HOLE WITH 12"X12" PLASTIC HARDWARE CLOTH 1/4" MESH OR GALVANIZED STEEL WIRE, MINIMUM WIRE DIAMETER 0.03", NUMBER 4 MESH HARDWARE CLOTH ANCHORED FIRMLY TO THE OUTSIDE OF THE STRUCTURE.
9. ALL REINFORCING STEEL SHALL HAVE A MINIMUM COVER OF 2" AND BE CUT CLEAR OF ALL OPENINGS BY 2".
10. CAST-IN PLACE CONCRETE IS TO BE CLASS A3 (3000 PSI). PRECAST CONCRETE IS TO BE 4000 PSI.
11. PROVIDED SAFETY SLABS WHEN SPECIFIED ON THE PLANS.
12. DI-5 IS TO BE UTILIZED IN LOCATIONS NOT NORMALLY SUBJECT TO TRAFFIC.

MINIMUM H	
PIPE SIZE	H
12"	2'-9"
15"	3'-0"
18"	3'-4"
24"	3'-10"
30"	4'-5"
36"	5'-0"
42"	5'-6"

GRATE BAR SPACING CHART		
GRATE TYPE	MAXIMUM DIMENSION	
	A	B
A I	1 1/2"	3"
A III	1"	1"

ST'D PG-2A TYPE	COVER DIMENSIONS AND QUANTITIES								
	W1	W2	W3	W4	✳D	D1	D2	X	Z
A1,A2,A3	3'-0 1/2"	2'-0 3/4"	2'-0 5/16"	1'-0 3/8"	6"	4"	3"	14"	2'-2"
B1,B2,B3,B4 C1,C2,C3	2'-9"	2'-9"	1'-6 9/16"	1'-6 9/16"	8"	4 1/2"	4 1/2"	16"	2'-8"
E	2'-3"	2'-3"	1'-8 1/16"	1'-8 1/16"	12"	9"	9"	19"	2'-8"

✳ TOLERANCE ± 1/2"

STANDARD DITCH DROP INLET

VIRGINIA DEPARTMENT OF TRANSPORTATION

REV. 7/05

104.21

SPECIFICATION REFERENCE

233
302

U.S. DEPARTMENT OF TRANSPORTATION
FEDERAL HIGHWAY ADMINISTRATION
EASTERN FEDERAL LANDS HIGHWAY DIVISION

DETAIL

STANDARD DITCH DROP INLET

DETAIL APPROVED FOR USE --/----

REVISED:

DETAIL
E604-M

6/16/2008 11:14:08 AM C:\PWworking\PITT\dms8108\Detail_DI-5.dgn

DI-7,7A,7B

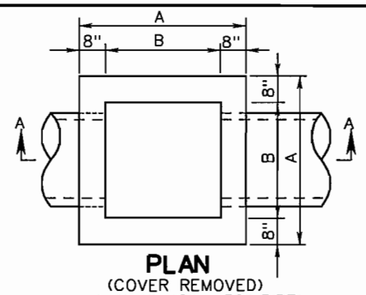

PLAN
(COVER REMOVED)
A=4'-4" (12" - 36" PIPE)
B=3'-0" (12" - 36" PIPE)
A=4'-10" (42" PIPE)
B=3'-6" (42" PIPE)

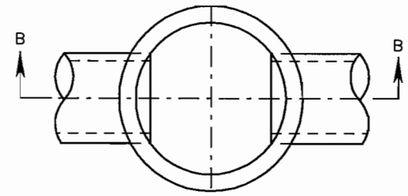

PLAN
(COVER REMOVED)

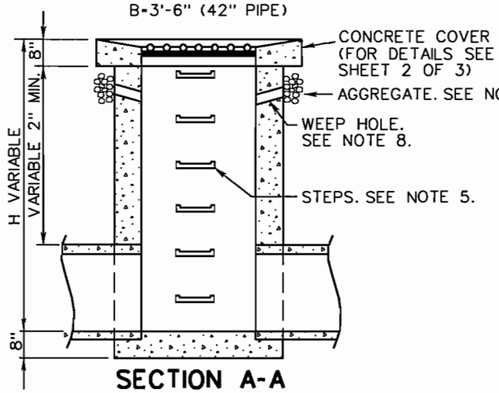

SECTION A-A
CAST IN PLACE
FOR USE WITH 12" TO 42" PIPES

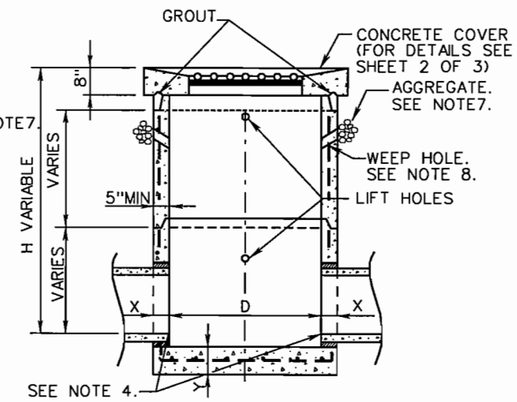

SECTION B-B
PRECAST

RECOMMENDED MINIMUM HEIGHT CHART		
PIPE SIZE	H DIMENSION	
	CONC.	CORR. METAL
12"	2'-6"	2'-5"
15"	2'-9¼"	2'-8"
18"	3'-0½"	2'-11"
21"	3'-3¾"	3'-2"
24"	3'-7"	3'-5"
27"	3'-10¼"	3'-8"
30"	4'-1½"	3'-11"
33"	4'-4¾"	4'-2"
36"	4'-8"	4'-5"
42"	5'-2½"	4'-11"

NOTES (CONT.)

15. DI-7--------NO GUTTER
    DI-7A-------SINGLE GUTTER WHEN DROP INLET IS ON A GRADE.
    DI-7B------ DOUBLE GUTTER WHEN DROP INLET IS IN A SAG BETWEEN TWO GRADES.

16. FOR DETAILS OF PRECAST DI-7 NOT SHOWN HEREON SEE PRECAST UNIT ASSEMBLY DIAGRAM, PAGE 103.01, FOR PRECAST GENERAL NOTES, PAGE 103.02 AND FOR APPLICABLE PRECAST BASE, RISER AND TOP DETAILS, PAGES 103.07 THRU 103.12.

17. GRATE BARS TO BE PARALLEL TO DITCH FLOW.

PIPE SIZE	12"	15"	18"	24"	30"	36"	42"
MINIMUM DEPTH H	2'-0"	2'-3¼"	2'-6½"	3'-1"	3'-7½"	4'-2"	4'-8½"
CONCRETE CUBIC YARDS	.947	1.045	1.143	1.339	1.535	1.731	1.927

INCREMENT PER FOOT OF ADDITIONAL DEPTH (H) { = 0.362 CU. YDS. (12" - 36" PIPE)
{ = 0.410 CU. YDS. (42" PIPE)

NOTES

1. DEPTH OF INLET (H) TO BE SHOWN ON PLANS.
2. THE "H" DIMENSION SHOWN ON THE STANDARDS AND SPECIFIED ON THE PLANS WILL BE MEASURED FROM THE INVERT OF THE OUTFALL PIPE TO THE TOP OF THE STRUCTURE. PLAN "H" DIMENSIONS ARE APPROXIMATE ONLY FOR ESTIMATING PURPOSES AND THE ACTUAL DIMENSIONS SHALL BE DETERMINED BY THE CONTRACTOR FROM FIELD CONDITIONS. MAXIMUM DEPTH (H) TO BE 12'-8.
3. WHEN SPECIFIED ON THE PLANS THE INVERT IS TO BE SHAPED IN ACCORDANCE WITH STANDARD IS-1. THE COST OF FURNISHING AND PLACING ALL MATERIALS INCIDENTAL TO THE SHAPING IS TO BE INCLUDED IN THE BID PRICEN FOR THE STRUCTURE.
4. IN THE EVENT THE INVERT OF THE OUTFALL PIPE IS HIGHER THAN THE BOTTOM OF THE STRUCTURE, THE INVERT OF THE STRUCTURE SHALL BE SHAPED WITH CEMENT MORTAR TO PREVENT STANDING OR PONDING OF WATER IN THE STRUCTURE. THE COST OF FURNISHING AND PLACING ALL MATERIALS INCIDENTAL TO THE SHAPING IS TO BE INCLUDED IN THE BID PRICE FOR THE STRUCTURE.
5. STEPS ARE TO BE PROVIDED WHEN H IS 4'-0" OR GREATER. FOR DETAILS SEE STANDARD ST-1.
6. REINFORCED CONCRETE FOOTING MAY BE PRECAST OR CAST-IN-PLACE. TWO LIFTING HOOKS OF FABRICATORS DESIGN TO BE PROVIDED IN PRECAST FOOTING
7. 4" DEPTH AGGREGATE #57 X 6" WIDTH.
8. 3" DIAMETER WEEP HOLE WITH 12"X12" PLASTIC HARDWARE CLOTH ¼" MESH OR GALVANIZED STEEL WIRE, MINIMUM WIRE DIAMETER 0.03", NUMBER 4 MESH HARDWARE CLOTH ANCHORED FIRMLY TO THE OUTSIDE OF THE STRUCTURE.
9. THE TYPE OF INLET (PRECAST OR CAST IN PLACE), DETAILED HEREON, TO BE CONSTRUCTED, WILL BE AT THE OPTION OF THE CONTRACTOR.
10. FOR DETAILS OF CONCRETE COVER, COLLAR AND GRATE AND THE METHOD OF PLACING APPROACH GUTTER SEE SHEET 2 OF 3.
11. CAST-IN PLACE CONCRETE IS TO BE REINFORCED CONC. CLASS A, f'c=3000 PSI. PRECAST CONCRETE IS TO BE 4000 PSI.
12. CONCRETE QUANTITIES SHOWN ARE FOR INDICATED DEPTH (H) WITHOUT PIPES. THE AMOUNT DISPLACED BY PIPES MUST BE DEDUCTED TO OBTAIN TRUE QUANTITIES. FOR INLETS OF DIFFERENT DEPTHS ADD OR SUBTRACT THE APPROPIATE CUBIC YARDS OF CONCRETE FOR EACH FOOT OF DEPTH.
13. PAVED DITCHES ARE TO BE TRANSITIONED TO MEET INLET GUTTER AS SHOWN IN STANDARD PAVED DITCH TYPE 2A.
14. PROVIDE SAFETY SLABS WHEN SPECIFIED ON THE PLANS.

SHEET 1 OF 3

SPECIFICATION REFERENCE
241 503

STANDARD MEDIAN DROP INLET
12" TO 42" PIPE

104.22

SHEET 1 OF 3

U.S. DEPARTMENT OF TRANSPORTATION
FEDERAL HIGHWAY ADMINISTRATION
EASTERN FEDERAL LANDS HIGHWAY DIVISION

DETAIL

STANDARD MEDIAN DROP INLET

DETAIL APPROVED FOR USE --/----
REVISED:

DETAIL
E604-N

6/16/2008 11:15:37 AM C:\PWworking\PITT\dms8108\Detail_DI-7.dgn

REG	STATE	PROJECT	SHEET NO.
-	VA	VA-A-AD-48(1)	S60

DI-7,7A,7B

DETAILS OF CONCRETE COVER AND GRATE

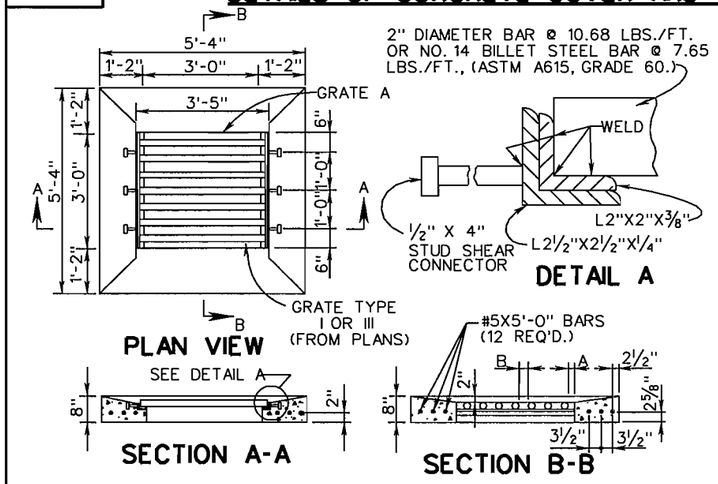

PLAN VIEW

SECTION A-A

SECTION B-B

APPROXIMATE QUANTITIES	
CONCRETE CLASS A3	REINFORCING STEEL
0.423 C. Y.	63 LBS.

GRATE A:

BAR SPACING CHART		
GRATE TYPE	MAXIMUM DIMENSION	
	A	B
I	1 1/2"	3"
III	1"	1"

NOTES

1. GRATE A IS TO BE UTILIZED IN LOCATIONS NOT NORMALLY SUBJECT TO TRAFFIC.
2. GRATE B IS TO BE UTILIZED IN LOCATIONS NORMALLY SUBJECT TO TRAFFIC.
3. FOR DETAILS OF LOAD CARRYING GRATE (GRATE B), SEE T-DI-7, SHEET 103.08.
4. CONCRETE COVER AND GRATE ARE TO BE FURNISHED AS A SINGLE UNIT. OUTSIDE DIMENSIONS OF GRATE TO BE 3'-4" X 2'-11 3/4" (GRATE A) OR 3'-4" X 2'-11 1/2" (GRATE B).
5. ALTERNATE METHODS OF ANCHORING ANGLE IRON WILL BE ACCEPTABLE IF APPROVED BY THE ENGINEER.
6. GRATE AND COLLAR ARE TO BE GALVANIZED.
7. CONCRETE COVER MAY BE PRECAST OR CAST IN PLACE.
8. CONCRETE TO BE CLASS A3 IF CAST IN PLACE. 4000 PSI IF PRECAST.
9. GRATE BARS TO BE PARALLEL TO DITCH FLOW.

DETAILS OF GUTTER AND METHOD OF PLACEMENT

NOTES

1. DI-7 NO GUTTERS.
   DI-7A NO GUTTER IN ONE DIRECTION.
   DI-7B GUTTER IN BOTH DIRECTIONS.
2. JOINTS BETWEEN GUTTERS AND CONCRETE COVER ARE TO BE DOWELED WITH #4 X 8" SMOOTH RODS @ APPROX. 12" C-C TO PREVENT SETTLEMENT. IN LIEU OF DOWELS A 2" X 4" NOTCH MAY BE PROVIDED.
   SEE STANDARD T-DI-3, 4 ALTERNATE DESIGN.
3. VARIABLE 2:1 OR FLATTER.
4. DITCH GRADE MUST BE ADJUSTED TO MEET DIFFERENCE IN ELEVATION. SEE LONGITUDINAL SECTION.
5. IF DEPTH (D) BECOMES LESS THEN 4", LENGTH OF WINGS ARE TO BE EXTENDED AS DIRECTED BY THE ENGINEER.
6. CURTAIN WALL TO BE LOCATED AT THE END OF THE PAVED DITCH SECTIONS OF THE DI-7A & DI-7B THAT ARE NOT ABUTTED BY OTHER DRAINAGE.
7. IF NORMAL DITCH GRADE IS TOO FLAT TO ALLOW FOR ADJUSTED GRADE TO INLET, A SPECIAL GUTTER DETAIL WILL BE REQUIRED ON PLANS.

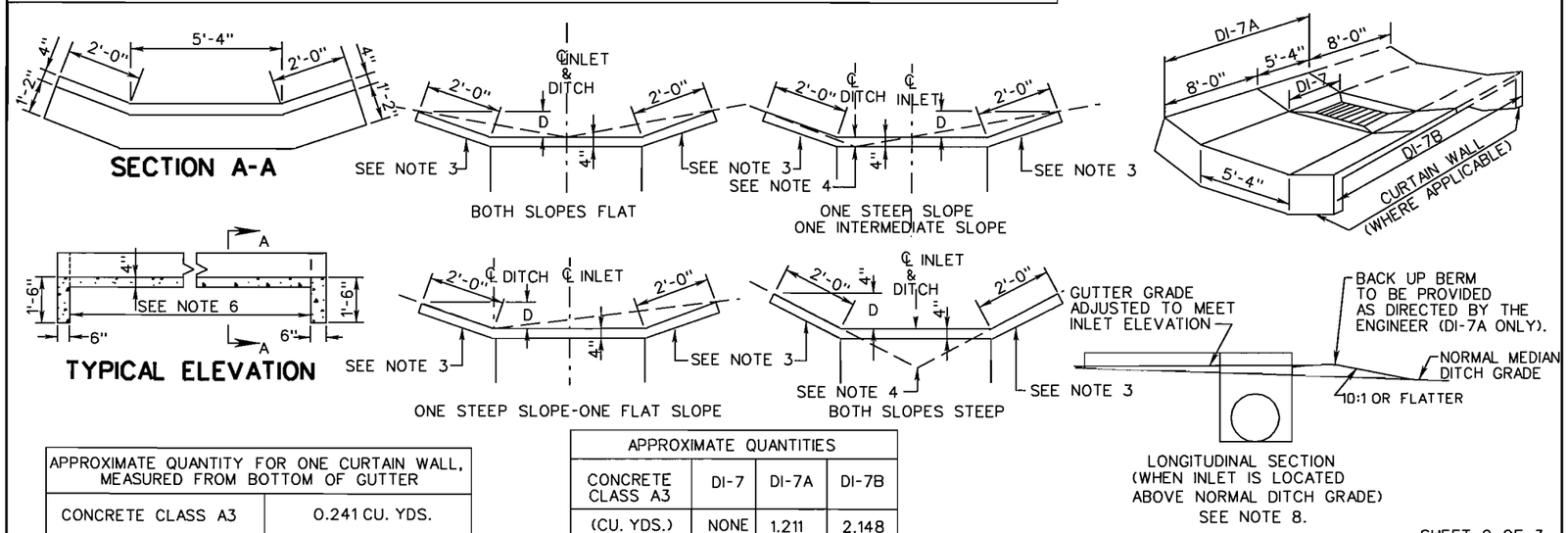

APPROXIMATE QUANTITY FOR ONE CURTAIN WALL, MEASURED FROM BOTTOM OF GUTTER	
CONCRETE CLASS A3	0.241 CU. YDS.

APPROXIMATE QUANTITIES			
CONCRETE CLASS A3	DI-7	DI-7A	DI-7B
(CU. YDS.)	NONE	1.211	2.148

SHEET 2 OF 3

REV. 7/05

104.23

STANDARD MEDIAN DROP INLET
12" TO 42" PIPE

VIRGINIA DEPARTMENT OF TRANSPORTATION

SPECIFICATION REFERENCE

241
503

SHEET 2 OF 3

U.S. DEPARTMENT OF TRANSPORTATION
FEDERAL HIGHWAY ADMINISTRATION
EASTERN FEDERAL LANDS HIGHWAY DIVISION

DETAIL

STANDARD MEDIAN DROP INLET

DETAIL APPROVED FOR USE --/----

REVISED:

DETAIL
E604-N

6/16/2008 11:17:27 AM C:\PWworking\PITT\dms8108\Detail_Di-7-2.dgn

REG	STATE	PROJECT	SHEET NO.
-	VA	VA-A-AD-48(1)	S61

DI-7,7A,7B

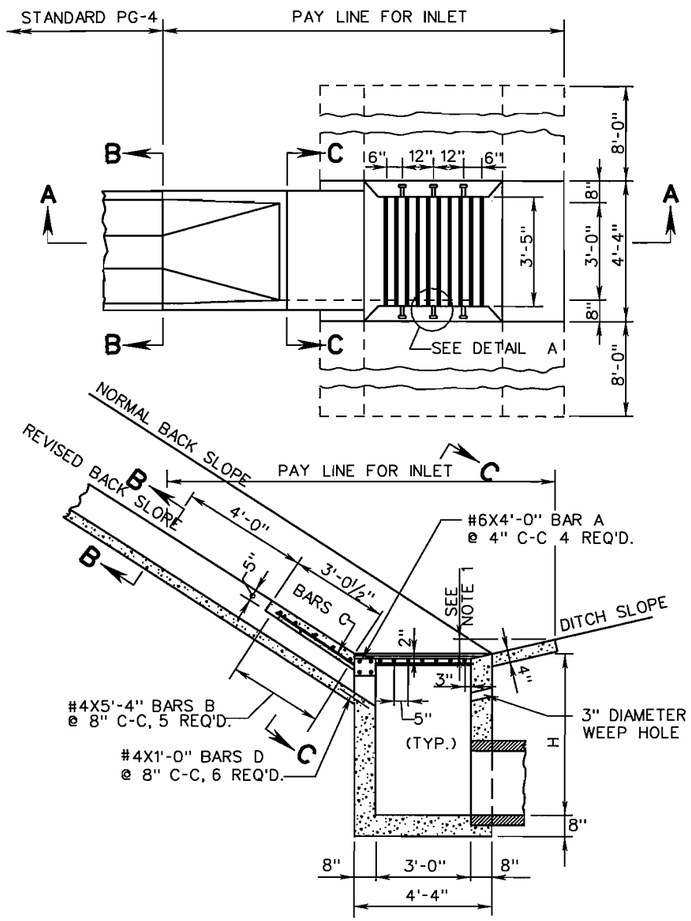

SECTION A-A

NOTES

1. APRON IS TO BE CONSTRUCTED TO A DEPTH OF 1'-0" ON BACK SLOPE SIDE OF INLET (DI-7). ON ROADWAY SIDE, THE DEPTH IS TO BE 1'-0" OR TO THE SHOULDER ELEVATION, WHICHEVER IS LESSER.
2. ALTERNATE METHODS OF ANCHORING ANGLE IRON WILL BE ACCEPTABLE IF APPROVED BY THE ENGINEER.
3. COLLAR AND GRATE ARE TO BE GALVANIZED IN ACCORDANCE WITH THE SPECIFICATIONS.
4. OUTSIDE DIMENSIONS OF GRATE ARE TO BE 3'-4" X 2'-11 ¾".
5. ALL CONCRETE IS TO BE REINFORCED CONC. CLASS A, f'c=3000PSI.
6. NORMAL DITCH IS TO BE TRANSITIONED TO TIE SMOOTHLY INTO GUTTER. DITCH GRADE IS TO BE ADJUSTED AS NECESSARY TO MEET GRADE ELEVATION.
7. QUANTITIES SHOWN ARE BASED ON DEPTH H =5'-0".
8. THE AMOUNT OF CONCRETE DISPLACED BY PIPES MUST BE DEDUCTED TO OBTAIN TRUE QUANTITIES. FOR EACH FOOT OF DIFFERENCE IN DEPTH H ADD OR SUBTRACT INCREMENT AS SHOWN.
9. SEE STANDARD DI-7, DI-7A AND DI-7B FOR DETAILS AND DIMENSIONS NOT SHOWN HEREON.
10. GRATE BARS ARE TO BE INSTALLED SO THEY WILL BE ALIGNED PARALLEL TO THE DITCH FLOW.

APPROXIMATE QUANTITIES	
REINFORCED CONC. CLASS A, f'c=3000PSI	REINFORCING STEEL
CU. YDS.	LBS.
4.091	60

INCREMENT PER FOOT OF DEPTH (H) = 0.362 CU. YDS.
CONCRETE TO BE ADDED WHEN DOUBLE GUTTER IS REQ'D. = 1.112 CU. YDS.

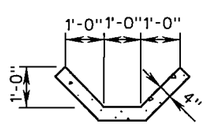

SECTION B-B

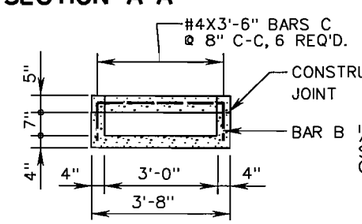

SECTION C-C

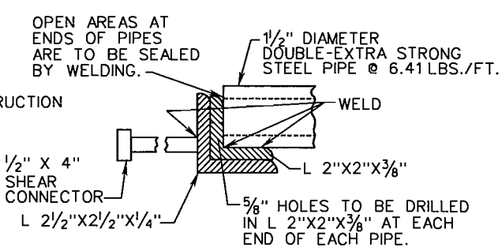

DETAIL A

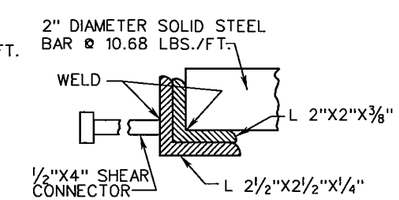

ALTERNATE DETAIL A

SHEET 3 OF 3

SPECIFICATION REFERENCE
502

STANDARD DI-7, 7A OR 7B WITH FLUME CONNECTION 12" TO 36" PIPE

104.24

SHEET 3 OF 3

U.S. DEPARTMENT OF TRANSPORTATION
FEDERAL HIGHWAY ADMINISTRATION
EASTERN FEDERAL LANDS HIGHWAY DIVISION

DETAIL

STANDARD D1-7, 7A OR 7B
WITH FLUME CONNECTION

DETAIL APPROVED FOR USE --/----
REVISED:

DETAIL
E604-N

6/16/2008 11:18:31 AM C:\PWworking\PITT\dms8108\Detail_DI-7-3.dgn

REG	STATE	PROJECT	SHEET NO.
-	VA	VA-A-AD-4B(1)	S62

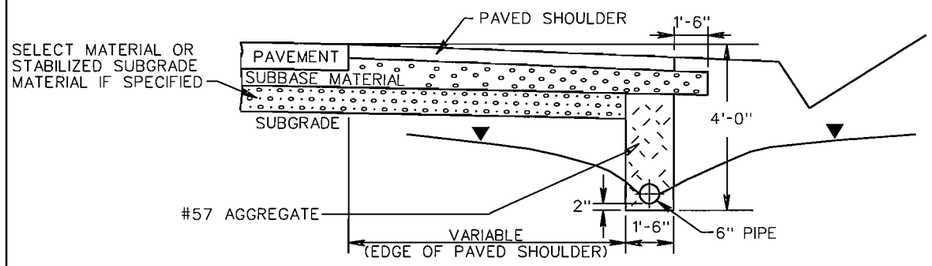

PAVED SHOULDER SECTION

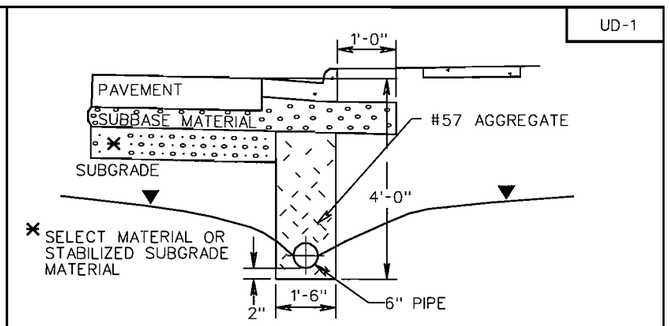

CURB AND GUTTER SECTION

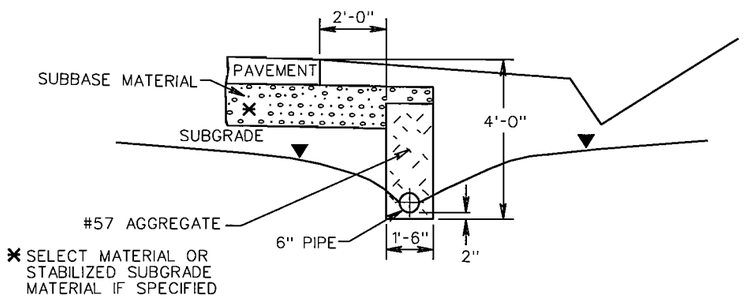

WITHOUT PAVED SHOULDER

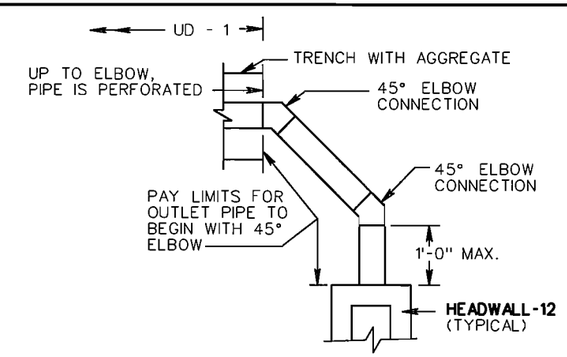

PLAN VIEW OF OUTLET PIPE AT FILL

LONGITUDINAL PERFORATED PIPE

TYPE OF PIPE	CRUSHING STRENGTH	
	✱W.T.	6" NOMINAL DIAMETER
SMOOTH WALL PVC	.153	
CORRUGATED PE		AASHTO M-252

NON-PERFORATED OUTLET PIPE

TYPE OF PIPE	CRUSHING STRENGTH	
	✱W.T.	6" NOMINAL DIAMETER
SMOOTH WALL PVC	.153	
SMOOTH WALL PE		70 PSI ✱✱✱

✱ WALL THICKNESS (MIN) - INCHES

✱✱✱ TESTED ACCORDING TO ASTM D-2412 AT 5% DEFLECTION.

NOTES:

1. WHEN THE LONGITUDINAL PIPE CONNECTS DIRECTLY INTO A DRAINAGE STRUCTURE (DROP INLET, MANHOLE, ECT.), NON-PERFORATED OUTLET PIPES ARE NOT REQUIRED.
2. INVERT ELEVATION AT OUTLET END OF OUTLET PIPE TO BE A MINIMUM OF 1'-0" ABOVE INVERT ELEVATION OF RECEIVING DRAINAGE DITCH OR STRUCTURE.
3. ALL CONNECTIONS (ELBOWS, WYES, ETC.) WITHIN PAY LIMITS FOR OUTLET PIPE ARE TO BE OF THE SAME CRUSHING STRENGTH AS THE OUTLET PIPE.
4. OUTLET PIPE ARE TO BE INSTALLED ON 2% MIN. (3% DESIRABLE) GRADE.
5. THE NORMAL DEPTH OF UNDERDRAIN IS TO BE 4'-0" BELOW THE NEAR EDGE OF PAVEMENT AS SHOWN. THE LONGITUDINAL GRADE OF THE UNDERDRAIN SHALL FOLLOW THAT OF THE ROADWAY WITH A MINIMUM GRADE OF 0.2 %
6. WHERE THE BOTTOM OF SELECT MATERIAL IS GREATER THAN 4'-0" BELOW THE PAVEMENT, THE BOTTOM OF THE UNDERDRAIN IS TO BE COINCIDENT WITH THE BOTTOM OF SELECT MATERIAL AND THE TRENCH DEPTH AND BACKFILL QUANITITY INCREASED ACCORDINGLY.
7. WHEN USED WITH STABILIZED OPEN-GRADED DRAINAGE LAYER, THE BOTTOM OF THE CURB AND GUTTER SHALL BE CONSTRUCTED PARALLEL TO THE SLOPE OF SUBBASE COURSES OUT TO THE DEPTH OF THE PAVEMENT.
8. OUTLET PIPE TO BE SECURELY CONNECTED TO EW-12OR OTHER DRAINAGE STRUCTURE.
9. ▼ DENOTES WATER TABLE.
10. OUTLET PIPE CONFIGURATION TO PROVIDE FOR PASSAGE OF INSPECTION CAMERA WITH 2½" I. D. HEAD.

SPECIFICATION REFERENCE
240 501 701

STANDARD GROUNDWATER UNDERDRAIN

REV 8/07

108.01

U.S. DEPARTMENT OF TRANSPORTATION
FEDERAL HIGHWAY ADMINISTRATION
EASTERN FEDERAL LANDS HIGHWAY DIVISION

DETAIL

STANDARD GROUNDWATER UNDERDRAIN

DETAIL APPROVED FOR USE --/----

REVISED:

DETAIL E605-A

6/16/2008 11:20:29 AM C:\PWworking\PITT\dms81081\Detail_UD-1.dgn

REG	STATE	PROJECT	SHEET NO.
-	VA	VA-A-AD-48(1)	S63

UD-2

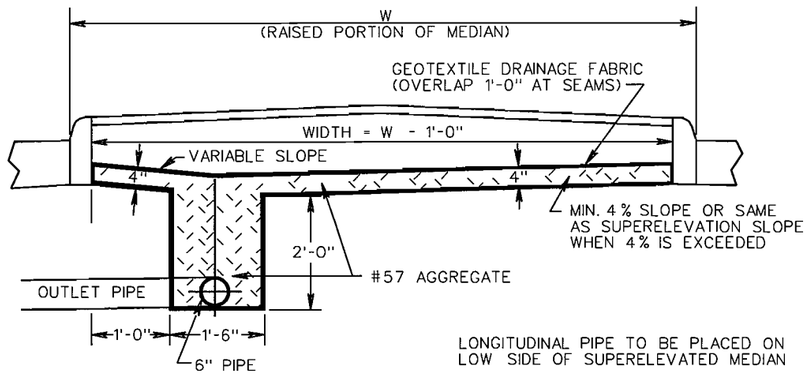

WITHOUT SUBBASE MATERIAL

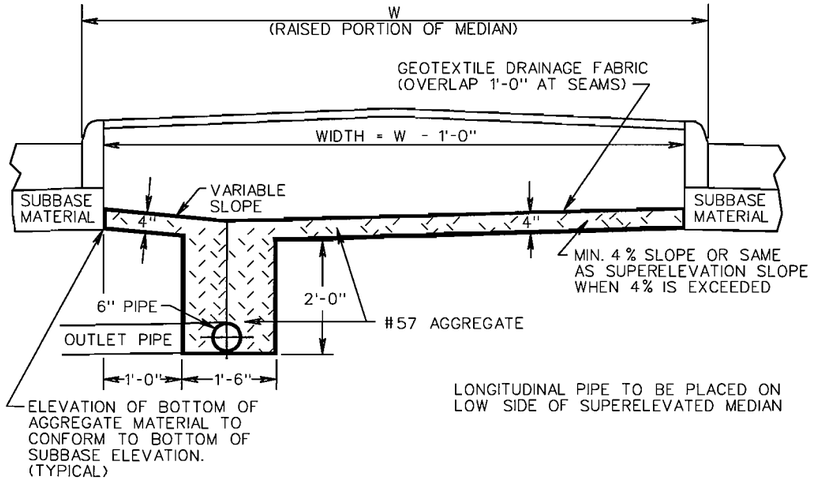

WITH SUBBASE MATERIAL

LONGITUDINAL PERFORATED PIPE

TYPE OF PIPE	CRUSHING STRENGTH	
	✕ W.T.	6" NOMINAL DIAMETER
SMOOTH WALL PVC	0.153	
CORRUGATED PE		AASHTO M-252

NON-PERFORATED OUTLET PIPE

TYPE OF PIPE	CRUSHING STRENGTH	
	✕ W.T.	6" NOMINAL DIAMETER
SMOOTH WALL PVC	0.153	
SMOOTH WALL PE		70 PSI ✕✕✕

✕ WALL THICKNESS (MIN) - INCHES

✕✕✕ TESTED ACCORDING TO ASTM D-2412 AT 5% DEFLECTION.

NOTES:

1. WHEN THE LONGITUDINAL PIPE CONNECTS DIRECTLY INTO A DRAINAGE STRUCTURE (DROP INLET, MANHOLE, ECT.), NON-PERFORATED OUTLET PIPES ARE NOT REQUIRED.
2. INVERT ELEVATION AT OUTLET END OF OUTLET PIPE TO BE A MINIMUM OF 1'-0" ABOVE INVERT ELEVATION OF RECEIVING DRAINAGE DITCH OR STRUCTURE.
3. ALL CONNECTIONS (ELBOWS, WYES, ETC.) WITHIN PAY LIMITS FOR OUTLET PIPE ARE TO BE OF THE SAME CRUSHING STRENGTH AS THE OUTLET PIPE.
4. OUTLET PIPE ARE TO BE INSTALLED ON 2% MIN. (3% DESIRABLE) GRADE AND LOCATED AT A MAXIMUM OF 500' APART.
5. OUTLET PIPE TO BE SECURELY CONNECTED TO EW-12OR OTHER DRAINAGE STRUCTURE.
6. WHEN UNDERDRAIN MUST TRAVERSE UNDER CROSSOVER LOCATIONS, NON-PERFORATED OUTLET PIPE ONLY IS TO BE USED UNDER CROSSOVER PAVEMENT.

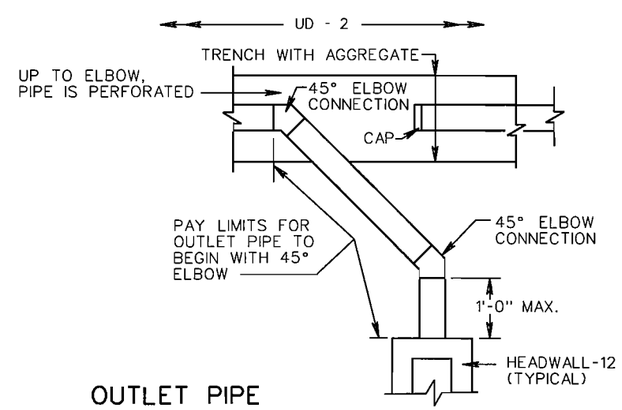

OUTLET PIPE

STANDARD UNDERDRAIN FOR USE WITH RAISED GRASS MEDIAN STRIPS

REV. 8/07

108.02

SPECIFICATION REFERENCE
240
501
701

U.S. DEPARTMENT OF TRANSPORTATION
FEDERAL HIGHWAY ADMINISTRATION
EASTERN FEDERAL LANDS HIGHWAY DIVISION

DETAIL

STANDARD UNDERDRAIN FOR USE WITH RAISED GRASS MEDIAN STRIPS

DETAIL APPROVED FOR USE --/----

REVISED:

DETAIL E605-B

6/16/2008 11:22:05 AM C:\PWworking\PITT\dms8108\Detail_UD-2.dgn

REG	STATE	PROJECT	SHEET NO.
-	VA	VA-A-AD-4B(1)	S64

UD-4

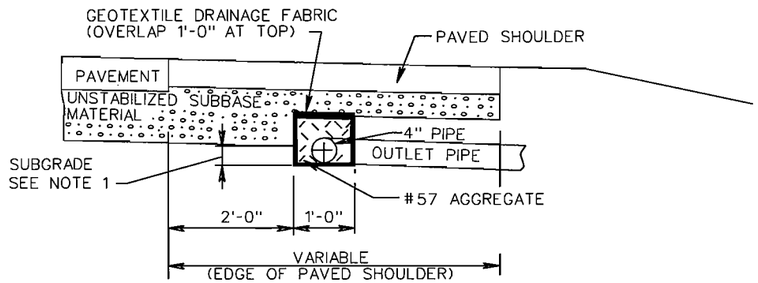

PAVED SHOULDER SECTION

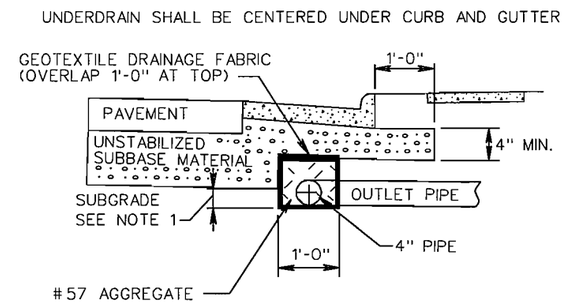

CURB AND GUTTER SECTION

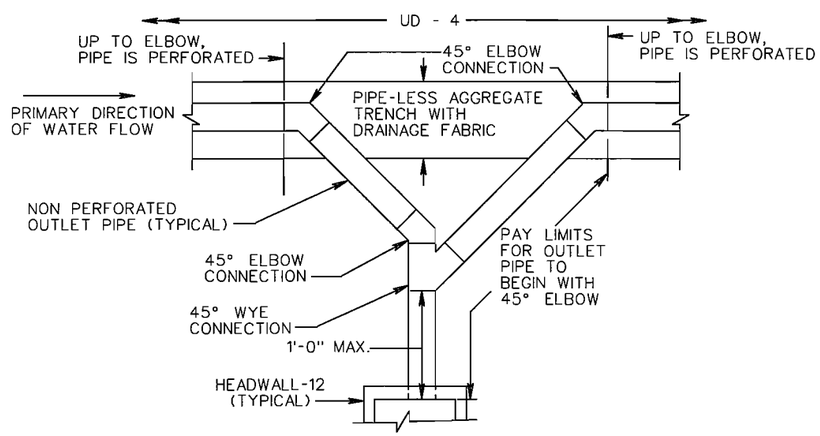

OUTLET PIPE

NO SCALE

SHEET 1 OF 2

STANDARD PAVEMENT EDGEDRAIN

REV 8/07

108.06

SPECIFICATION REFERENCE
240 258 501 701

SHEET 1 OF 2

U.S. DEPARTMENT OF TRANSPORTATION
FEDERAL HIGHWAY ADMINISTRATION
EASTERN FEDERAL LANDS HIGHWAY DIVISION

DETAIL

PAVEMENT EDGEDRAIN

DETAIL APPROVED FOR USE --/----

REVISED:

DETAIL
E605-C

6/16/2008 11:23:28 AM C:\PWworking\PITT\dms8108\Detail_UD-4.dgn

REG	STATE	PROJECT	SHEET NO.
-	VA	VA-A-AD-48(1)	S65

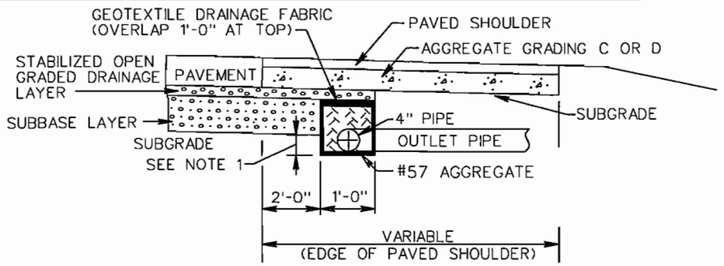

PAVED SHOULDER SECTION
(FOR USE WITH STABILIZED OPEN-GRADED DRAINAGE LAYER)

UNDERDRAIN SHALL BE CENTERED UNDER CURB AND GUTTER.

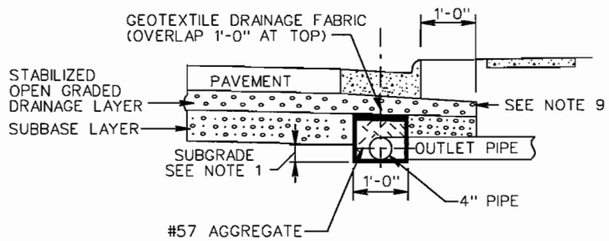

CURB AND GUTTER SECTION
(FOR USE WITH STABILIZED OPEN-GRADED DRAINAGE LAYER)

NOTES:

1. 4" MINIMUM, PROVIDED ATTAINING MINIMUM 4" OF AGGREGATE ON TOP OF PIPE.
2. WHEN THE LONGITUDINAL PIPE CONNECTS DIRECTLY INTO A DRAINAGE STRUCTURE (DROP INLET, MANHOLE, ECT.), NON-PERFORATED OUTLET PIPES ARE NOT REQUIRED.
3. INVERT ELEVATION AT OUTLET END OF OUTLET PIPE TO BE A MINIMUM OF 1'-0" ABOVE INVERT ELEVATION OF RECEIVING DRAINAGE DITCH OR STRUCTURE.
4. ALL CONNECTIONS (ELBOWS, WYES, ETC.) WITHIN PAY LIMITS FOR OUTLET PIPE ARE TO BE OF THE SAME CRUSHING STRENGTH AS THE OUTLET PIPE.
5. OUTLET PIPES ARE TO BE INSTALLED ON 2% MIN. (3% DESIRABLE) GRADE AND LOCATED EVERY 350' MAXIMUM OR AS NOTED ON PLANS.
6. OUTLET PIPE TO BE SECURELY CONNECTED TO HEADWALL OR OTHER DRAINAGE STRUCTURE.
7. WITHIN THE LIMITS OF A COMMERCIAL ENTRANCE, NON-PERFORATED PIPE SHALL BE UTILIZED IN LIEU OF PERFORATED PIPE.
8. THE LENGTH OF PIPE BETWEEN THE WYE CONNECTION AND THE HEADWALL SHALL BE LIMITED TO NO MORE THAN 1'-0" TO PERMIT CAMERA INSPECTION OF THE MAIN LINE IN EITHER DIRECTION.
9. IN SITUATIONS WHEN FULL DEPTH OF STABILIZED OPEN-GRADED MATERIAL CANNOT BE MAINTAINED UNDER CURB AND GUTTER, NO. 21B AGGREGATE SHALL BE USED UNDER CURB AND GUTTER.
   AGGREGATE GRADING C OR D MAY ALSO BE USED FROM TOP OF STABILIZED OPEN-GRADED MATERIAL LAYER AND CURB AND GUTTER.

UD-4

LONGITUDINAL PERFORATED PIPE

TYPE OF PIPE	CRUSHING STRENGTH	
	✕ W.T.	4" NOM. DIAMETER
SMOOTH WALL PVC	.103	
CORRUGATED PE		AASHTO M-252

NON-PERFORATED OUTLET PIPE FOR USE UNDER COMMERCIAL ENTRANCES AND FOR OUTLETS

TYPE OF PIPE	CRUSHING STRENGTH	
	✕ W.T.	4" NOM. DIAMETER
SMOOTH WALL PVC	.103	
SMOOTH WALL PE		70 PSI ✕✕✕

✕ WALL THICKNESS (MIN) - INCHES
✕✕✕ TESTED ACCORDING TO ASTM D-2412 AT 5% DEFLECTION.

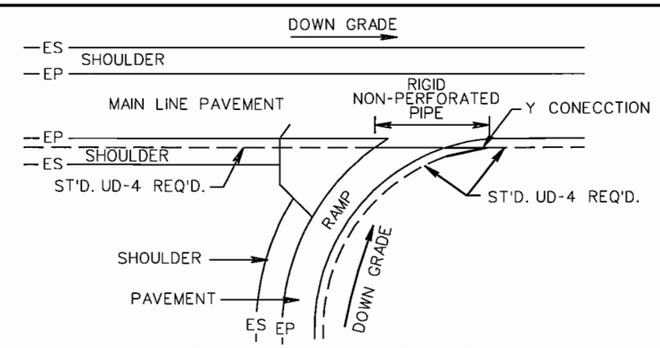

EDGEDRAINS IN GORE AREAS

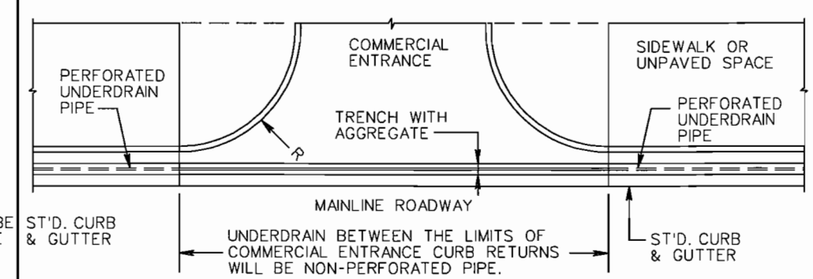

SHEET 2 OF 2

SPECIFICATION REFERENCE
240 258 501 701

STANDARD PAVEMENT EDGEDRAIN

REV 8/07
108.07

SHEET 2 OF 2

U.S. DEPARTMENT OF TRANSPORTATION
FEDERAL HIGHWAY ADMINISTRATION
EASTERN FEDERAL LANDS HIGHWAY DIVISION

DETAIL

PAVEMENT EDGEDRAIN

DETAIL APPROVED FOR USE --/----
REVISED:

DETAIL
E605-C

6/16/2008 11:24:48 AM C:\PWworking\PITT\dms8108\Detail_UD-4-2.dgn

REG	STATE	PROJECT	SHEET NO.
-	VA	VA-A-AD-4B(1)	S66

CD-1

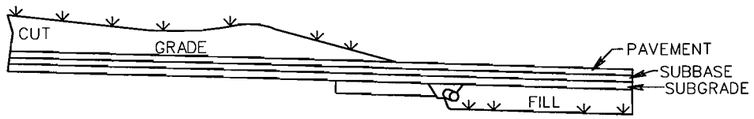

COMBINATION UNDERDRAIN CD-1 AT LOWER END OF CUTS
CENTER LINE SECTION
(WITH TYPE 1 SELECT MATERIAL)

TRENCH PLACEMENT

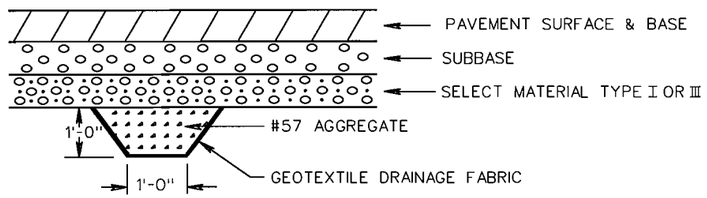

OR

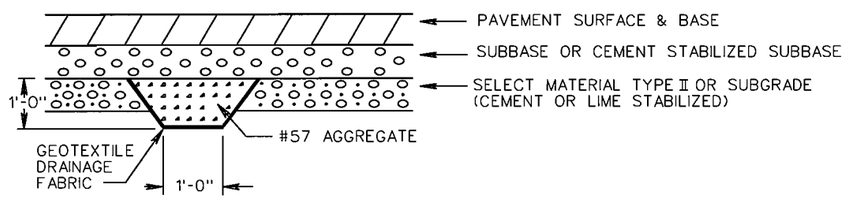

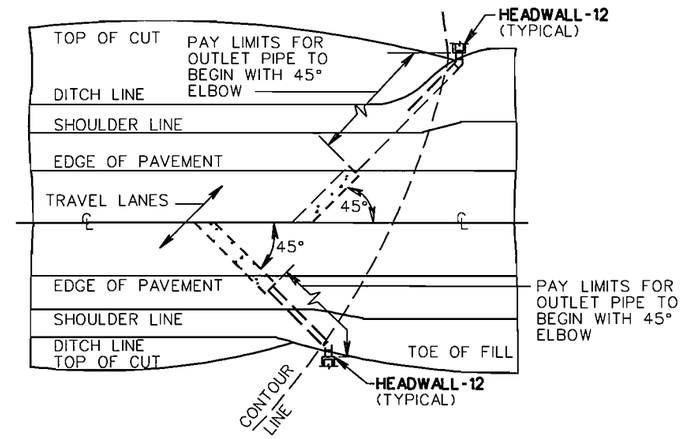

PLAN VIEW
(PLACEMENT OF CD-1 COMBINATION UNDERDRAIN)

NON-PERFORATED OUTLET PIPE

TYPE OF PIPE	CRUSHING STRENGTH			
	✕W.T.	4" NOM. DIAMETER	✕W.T.	6" NOM. DIAMETER
SMOOTH WALL PVC	.103		0.153	
SMOOTH WALL PE		70 PSI ✕✕✕		70 PSI ✕✕✕

✕ WALL THICKNESS (MIN) - INCHES
✕✕✕ TESTED ACCORDING TO ASTM D-2412 AT 5% DEFLECTION.

GENERAL NOTES

1. UNLESS SPECIFICALLY INDICATED, COMBINATION UNDERDRAIN WILL NOT BE LOCATED AT THIS POINT WHEN BOTH SUBBASE AND SUBGRADE ARE STABILIZED.
2. TRENCH SHALL BE FILLED WITH AGGREGATE AND THROUGHLY HAND TAMPED TO INSURE COMPACTNESS.
3. OUTLET PIPE SHALL BEGIN AT THE EDGE OF THE TRAVEL LANE PAVEMENT AND SHALL BE PLACED ON A GRADE PARALLEL TO THE SHOULDER SLOPE 2% MIN. (3% DESIRABLE) GRADE.
4. ON CURB AND GUTTER SECTIONS, WHERE IT IS IMPOSSIBLE TO OTHERWISE PROVIDE OUTLETS FOR UNDERDRAINS, THEY ARE TO BE LOCATED SO AS TO DRAIN INTO DROP INLETS OR MANHOLES.
5. ON SUPERELEVATED SECTIONS, TRENCH IS TO BE UNDER ENTIRE PAVEMENT AREA WITH OUTLET PIPE ON LOW SIDE ONLY.
6. INVERT ELEVATION AT OUTLET END OF OUTLET PIPE TO BE A MINIMUM OF 1'-0" ABOVE INVERT ELEVATION OF RECEIVING DRAINAGE DITCH OR STRUCTURE.
7. ALL CONNECTIONS (ELBOWS, WYES, ETC.) WITHIN PAY LIMITS FOR OUTLET PIPE ARE TO BE OF THE SAME CRUSHING STRENGTH AS THE OUTLET PIPE.
8. OUTLET PIPE TO BE SECURELY CONNECTED TO HEADWALL OR OTHER DRAINAGE STRUCTURE.

STANDARD COMBINATION UNDERDRAIN
(AT LOWER END OF CUTS)

REV 8/07

108.04

SPECIFICATION REFERENCE

232
501
701

U.S. DEPARTMENT OF TRANSPORTATION
FEDERAL HIGHWAY ADMINISTRATION
EASTERN FEDERAL LANDS HIGHWAY DIVISION

DETAIL

COMBINATION UNDERDRAIN

DETAIL APPROVED FOR USE --/----

REVISED:

DETAIL
E605-D

6/16/2008 11:27:13 AM C:\PWworking\PITT\dms81081\Detail_CD-1.dgn

REG	STATE	PROJECT	SHEET NO.
-	VA	VA-A-AD-48(1)	S67

CD- 2

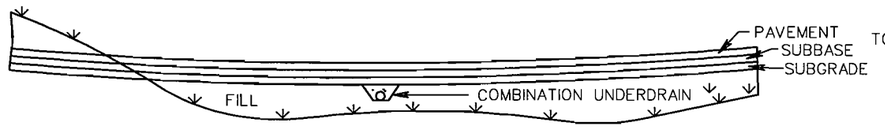

COMBINATION UNDERDRAIN CD-2 ON FILLS CENTER LINE SECTION

(WITH TYPE 1 SELECT MATERIAL)

TRENCH PLACEMENT

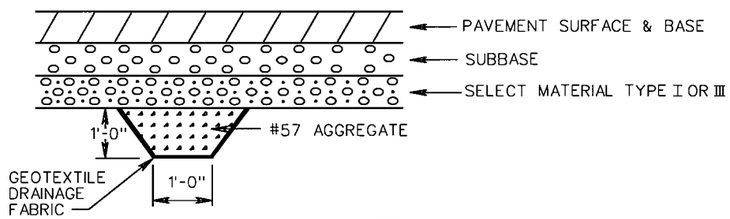

OR

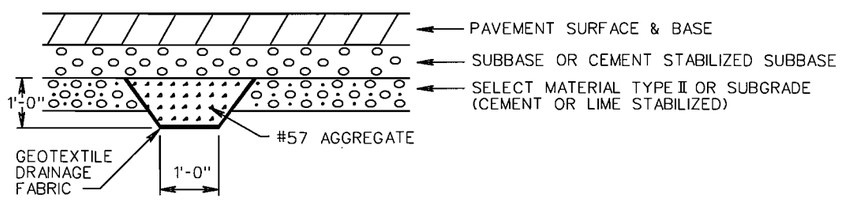

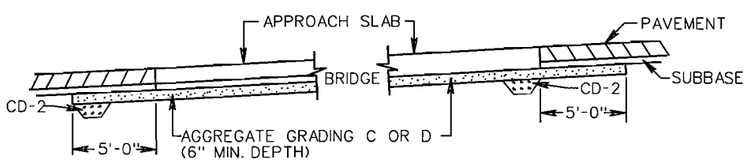

PLACEMENT OF CD-2 UNDERDRAIN AT BRIDGE APPROACH SLABS

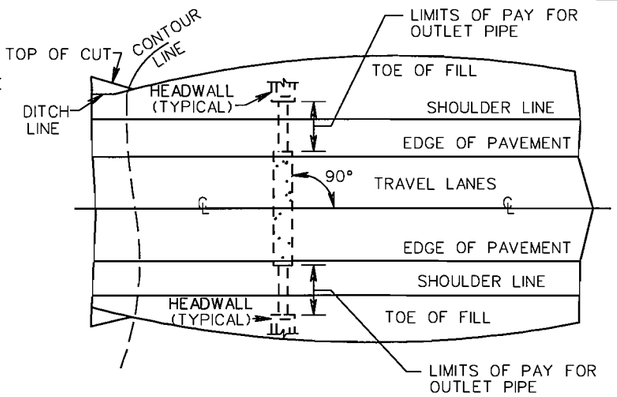

PLAN VIEW SHOWING PLACEMENT OF CD-2 UNDERDRAIN

NON-PERFORATED OUTLET PIPE

TYPE OF PIPE	CRUSHING STRENGTH			
	✖ W.T.	4" NOM. DIAMETER	✖ W.T.	6" NOM. DIAMETER
SMOOTH WALL PVC	.103		0.153	
SMOOTH WALL PE		70 PSI ✖✖✖		70 PSI ✖✖✖

✖ WALL THICKNESS (MIN) - INCHES

✖✖✖ TESTED ACCORDING TO ASTM D-2412 AT 5% DEFLECTION.

GENERAL NOTES

1. TRENCH SHALL BE FILLED WITH AGGREGATE AND THROUGHLY HAND TAMPED TO INSURE COMPACTNESS.
2. OUTLET PIPE SHALL BEGIN AT THE EDGE OF THE TRAVEL LANE PAVEMENT AND SHALL BE PLACED ON A GRADE PARALLEL TO THE SHOULDER SLOPE 2 % MIN. (3% DESIRABLE) GRADE.
3. ON CURB AND GUTTER SECTIONS, WHERE IT IS IMPOSSIBLE TO OTHERWISE PROVIDE OUTLETS FOR UNDERDRAINS, THEY ARE TO BE LOCATED SO AS TO DRAIN INTO DROP INLETS OR MANHOLES.
4. ON SUPERELEVATED SECTIONS, TRENCH IS TO BE UNDER ENTIRE PAVEMENT AREA WITH OUTLET PIPE ON LOW SIDE ONLY.
5. INVERT ELEVATION AT OUTLET END OF OUTLET PIPE TO BE A MINIMUM OF 1'-0" ABOVE INVERT ELEVATION OF RECEIVING DRAINAGE DITCH OR STRUCTURE.
6. ALL CONNECTIONS (ELBOWS, WYES, ETC.) WITHIN PAY LIMITS FOR OUTLET PIPE ARE TO BE OF THE SAME CRUSHING STRENGTH AS THE OUTLET PIPE.
7. OUTLET PIPE TO BE SECURELY CONNECTED TO HEADWALL OR OTHER DRAINAGE STRUCTURE.

SPECIFICATION REFERENCE
232 501 701

STANDARD COMBINATION UNDERDRAIN (AT GRADE SAGS AND BRIDGE APPROACHES)

REV 8/07

108.05

U.S. DEPARTMENT OF TRANSPORTATION
FEDERAL HIGHWAY ADMINISTRATION
EASTERN FEDERAL LANDS HIGHWAY DIVISION

DETAIL

COMBINATION UNDERDRAIN

DETAIL APPROVED FOR USE --/----

REVISED:

DETAIL E605-E

6/16/2008 11:29:26 AM C:\PWworking\PITT\dms8108\Detail_CD-2.dgn

FAIRFAX COUNTY PUBLIC FACILITIES MANUAL

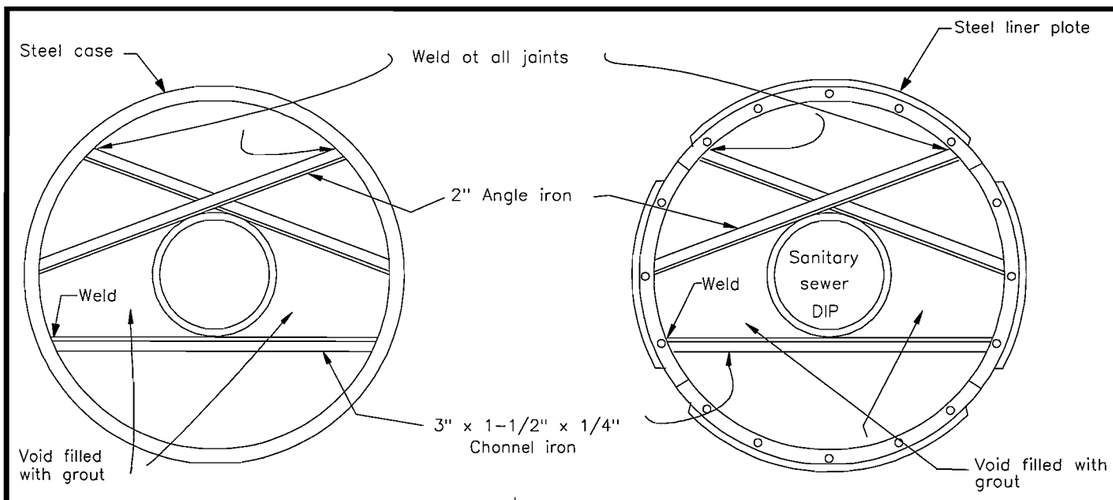

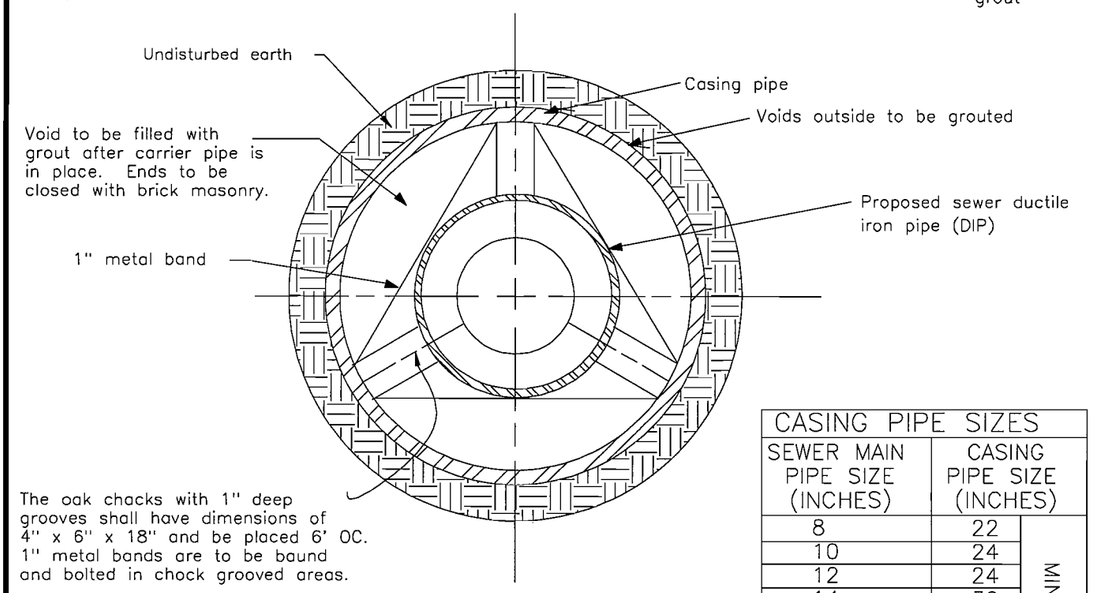

CASING PIPE SIZES		
SEWER MAIN PIPE SIZE (INCHES)	CASING PIPE SIZE (INCHES)	
8	22	MINIMUM
10	24	
12	24	
14	30	
16	30	
18	36	
20	36	
24	36	

All tunnel ends to be closed with brick and mortar construction.

Grout Specifications

One part cement and four parts concrete sand to which has been added "Passolite" or fly ash in the amount of 1/2 pound per bag of cement.

Casing pipe size varies, 8 gauge galvonized asphalt, coated corrugated metal culvert pipe AASHTO STD. M36 or black seomless steel welded (AWWA C-200) pipe minimum thickness 3/8".

HIGHWAY CROSSING

		PLATE NO.	STD. NO.
Rev. 1-00	JACKING AND BORING/ TUNNEL DETAILS	30-10	DWP-12

U.S. DEPARTMENT OF TRANSPORTATION
FEDERAL HIGHWAY ADMINISTRATION
EASTERN FEDERAL LANDS HIGHWAY DIVISION

DETAIL

SEWER LINE ENCASEMENT

DETAIL APPROVED FOR USE --/----

REVISED:

DETAIL E611-A

REG	STATE	PROJECT	SHEET NO.
-	VA	VA-A-AD-48(1)	S68

REG	STATE	PROJECT	SHEET NO.
-	VA	VA-A-AD-48(1)	S69

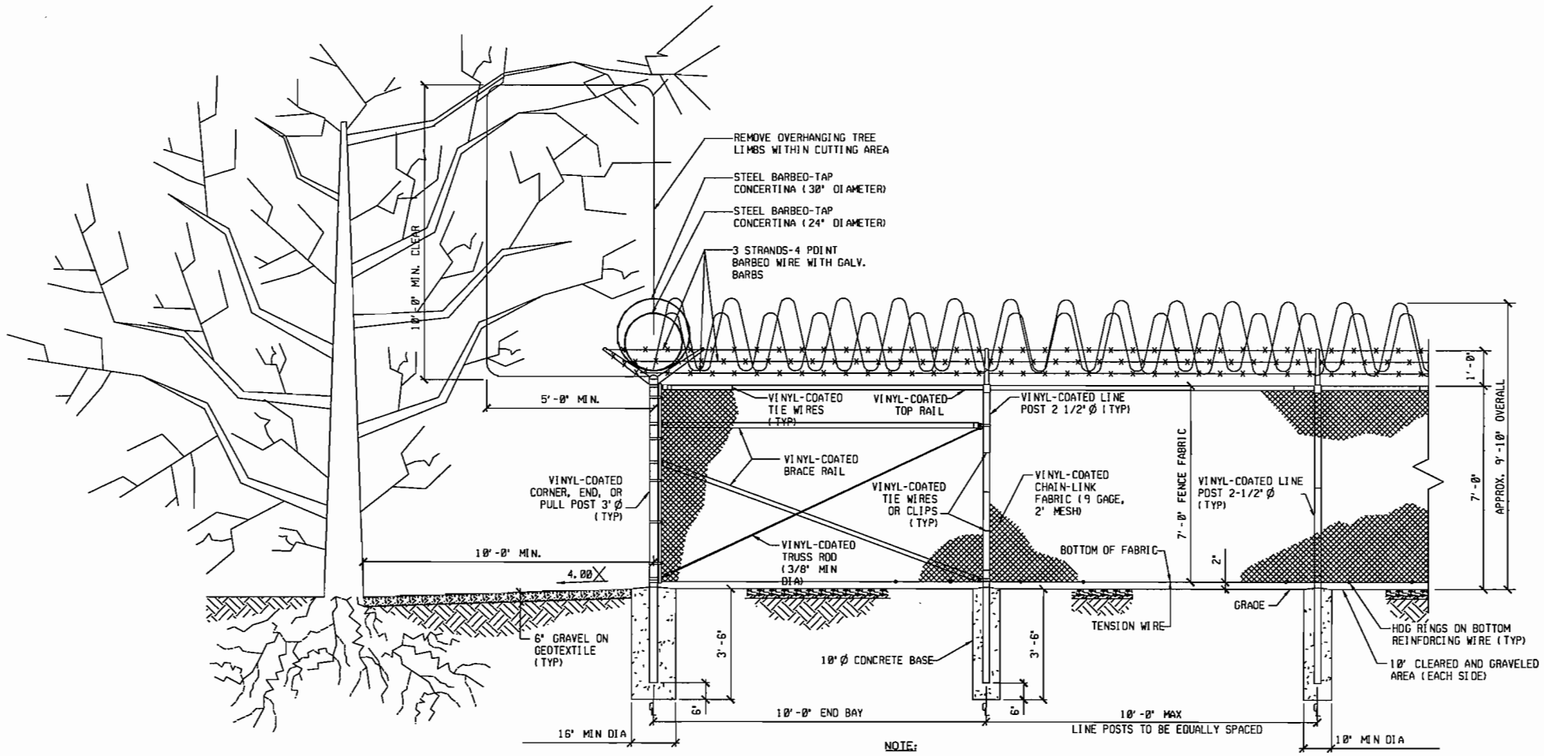

NOTE:
1. SEE FENCING DETAILS ON SHEET 3 OF 3
2. ALL FENCE COMPONENTS SHALL BE VINYL-COATED (BLACK)

CHAIN-LINK SECURITY FENCE

SCALE: NONE

SHEET 1 OF 2

U.S. DEPARTMENT OF TRANSPORTATION
FEDERAL HIGHWAY ADMINISTRATION
EASTERN FEDERAL LANDS HIGHWAY DIVISION

DETAIL

FENCE, CHAIN LINK

DETAIL APPROVED FOR USE --/----

REVISED:

DETAIL
E619-A

6/19/2008 6:19:55 PM C:\PWworking\PITT\dms81081\Detail_Fence01.dgn

REG	STATE	PROJECT	SHEET NO.
-	VA	VA-A-AD-48(1)	S70

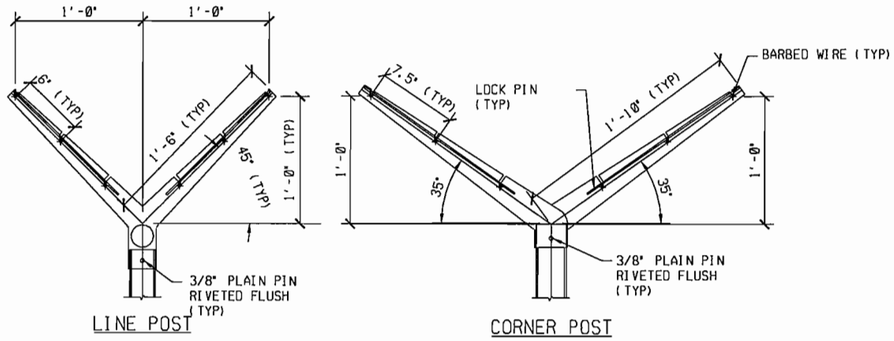

EXTENSION ARM DETAILS

SCALE: NONE

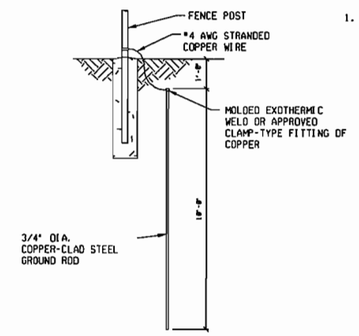

GROUNDING DETAIL

SCALE: NONE

GENERAL NEW WORK NOTES

1. ALL FENCE COMPONENTS SHALL BE VINYL-COATED (BLACK)

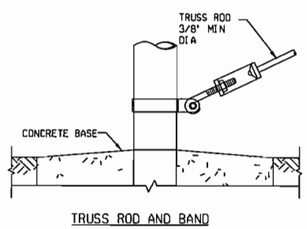

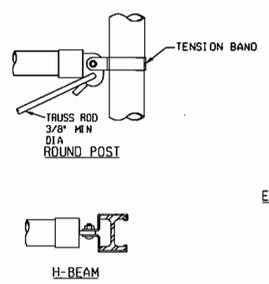

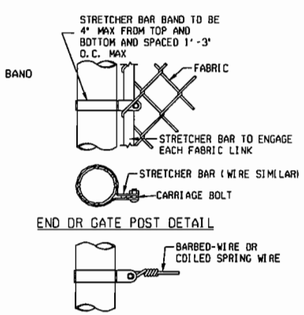

FASTENING DETAILS FOR TUBULAR POST OR H - COLUMNS

SCALE: NONE

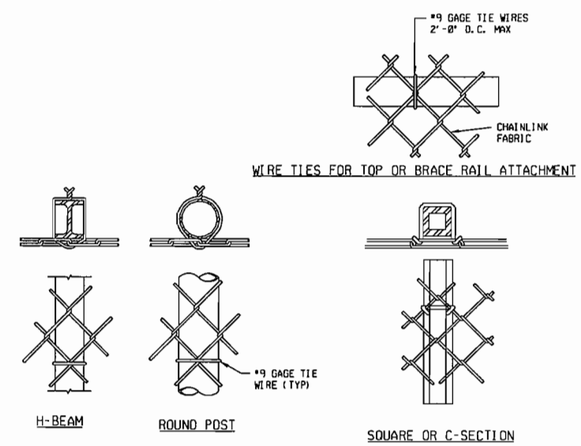

LINE POST ATTACHMENTS

SCALE: NONE

SHEET 2 OF 2

U.S. DEPARTMENT OF TRANSPORTATION
FEDERAL HIGHWAY ADMINISTRATION
EASTERN FEDERAL LANDS HIGHWAY DIVISION

DETAIL

FENCE, CHAIN LINK

DETAIL APPROVED FOR USE --/----

REVISED:

DETAIL E619-A

6/19/2008 6:42:07 PM C:\PWworking\PITT\dms8108\Detail_Fence02.dgn

REG	STATE	PROJECT	SHEET NO.
-	VA	VA-A-AD-48(1)	S71

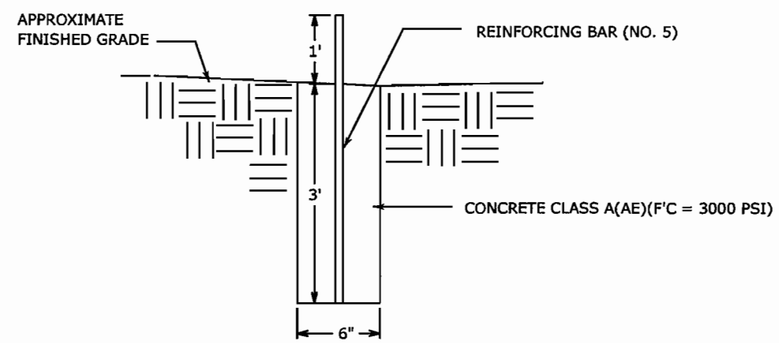

SETTLEMENT MONITORING MONUMENTS DETAIL

1. INSTALL MONUMENTS AT THE LOCATIONS SHOWN ON PLANS OR AS DIRECTED OTHERWISE.
2. EACH MONUMENT TO BE PROTECTED BY 3 FOOT HIGH, FLOURESCENT ORANGE PLASTIC, MESHED FENCE PLACED AT A 3 FOOT RADIUS FROM THE MONUMENT.

U.S. DEPARTMENT OF TRANSPORTATION
FEDERAL HIGHWAY ADMINISTRATION
EASTERN FEDERAL LANDS HIGHWAY DIVISION

DETAIL

SETTLEMENT MONITORING MONUMENTS DETAIL

DETAIL APPROVED FOR USE --/----

REVISED:

DETAIL
E621-A

6/19/2008 6:00:48 PM c:\pwworking\jth\dms8108\Detail_621-A.dgn

REG	STATE	PROJECT	SHEET NO.
-	VA	VA-A-AD-48(1)	S72

LENGTH AND SPACING TABLE

APPROACH SPEED*	LENGTH OF BUFFER SPACE	CHANNELIZING DEVICE		
		TAPER AREA	BUFFER SPACE	WORK SPACE
MPH	FEET	SPACING IN FEET		
25	155	20	50	50
30	200	20	60	60
35	250	20	70	70
40	305	20	80	80
45	360	20	90	90
50	425	20	100	100
55	495	20	110	110

* Approach speed based on the regulatory posted speed, not the advisory speed.

SIGN SPACING TABLE

ROAD TYPE	DISTANCE BETWEEN SIGNS IN FEET		
	A	B	C
Urban 40 MPH and less	100	100	100
Urban 45 MPH and greater	350	350	350
Rural	500	500	500
Expressway/Freeway	1000	1500	2640

NOTE:

1. Signs are shown for one direction of travel only. Place devices similar to those depicted for the opposite direction of travel.
2. Final location and spacing of signs and devices may be changed to fit field conditions as approved by the CO.
3. For pilot car operation, mount the PILOT CAR FOLLOW ME (G20-4) sign at a conspicuous location on the rear of vehicle. Prominently display the name of the contractor on the pilot car.
4. If closure is completely within the project limits, eliminate the "ROAD WORK AHEAD" (W20-1) and "END ROAD WORK" (G20-2) signs.
5. For night time flagging operation, provide floodlighting at flagger stations.
6. For project specific minimum width, refer to Special Contract Requirements, Section 156.
7. Do not allow equipment, materials, or vehicles to be parked or stored in the buffer space.
8. If signs will be in place more than 72 consecutive hours, use ground-mounted post.

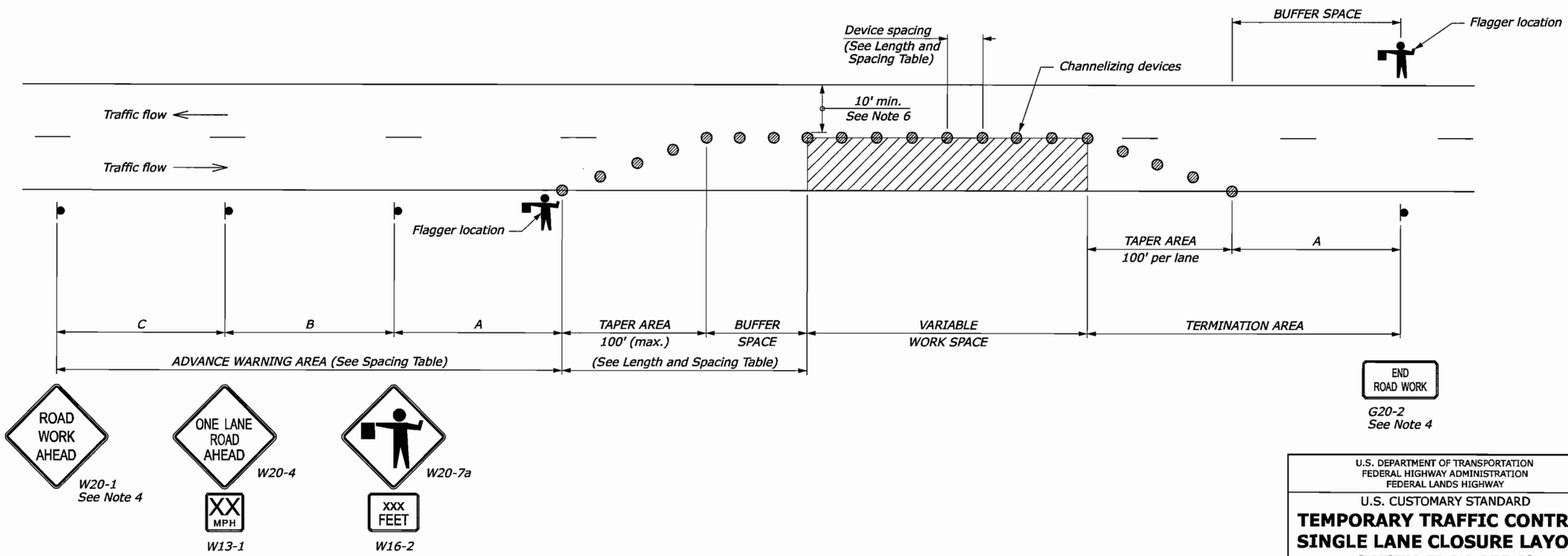

NO SCALE

U.S. DEPARTMENT OF TRANSPORTATION
FEDERAL HIGHWAY ADMINISTRATION
FEDERAL LANDS HIGHWAY

U.S. CUSTOMARY STANDARD

TEMPORARY TRAFFIC CONTROL SINGLE LANE CLOSURE LAYOUT (WITH FLAGGERS)

STANDARD APPROVED FOR USE 6/2005

REVISED:
DRAFT: 1/2007

STANDARD
635-A

6/19/2008 6:04:00 PM c:\pwworking\pitt\dms81082\st63506.dgn

REG	STATE	PROJECT	SHEET NO.
-	VA	VA-A-AD-48(1)	S73

LENGTH AND SPACING TABLE

APPROACH SPEED*	MINIMUM TAPER LENGTH**	LENGTH OF BUFFER SPACE	CHANNELIZING DEVICE		
			TAPER AREA	BUFFER SPACE	WORK SPACE
MPH	FEET	FEET	SPACING IN FEET		
25	Shoulder taper formula:	155	25	50	50
30	$L = \frac{WS^2}{180}$ for $S \leq 40$ MPH	200	30	60	60
35	$L = \frac{WS}{3}$ for $S \geq 45$ MPH	250	35	70	70
40	Where:	305	40	80	80
45	L = Minimum length of taper	360	45	90	90
50	W = Width of offset in feet S = Numerical value of posted speed limit or 85 percentile speed prior to work in miles per hour	425	50	100	100
55		495	55	110	110

* Approach speed based on the regulatory posted speed, not the advisory speed.

** Lengthen taper as needed to provide minimum of three channelizing devices in taper at required spacing.

SIGN SPACING TABLE

ROAD TYPE	DISTANCE BETWEEN SIGNS IN FEET		
	A	B	C
Urban 40 MPH and less	100	100	100
Urban 45 MPH and greater	350	350	350
Rural	500	500	500
Expressway/Freeway	1000	1500	2640

NOTE:

1. Final location and spacing of signs and devices may be changed to fit field conditions as approved by the CO.
2. For project specific minimum width, refer to Special Contract Requirements, Section 156.
3. If shoulder closure is completely within the project limits, eliminate the "ROAD WORK AHEAD" (W20-1) and "END ROAD WORK" (G20-2) signs.
4. Remove or cover Workers symbol sign (W21-1a) when workers are not present.
5. Do not allow equipment, materials, or vehicles to be parked or stored in the buffer space.
6. If signs will be in place more than 72 consecutive hours, use ground-mounted post.

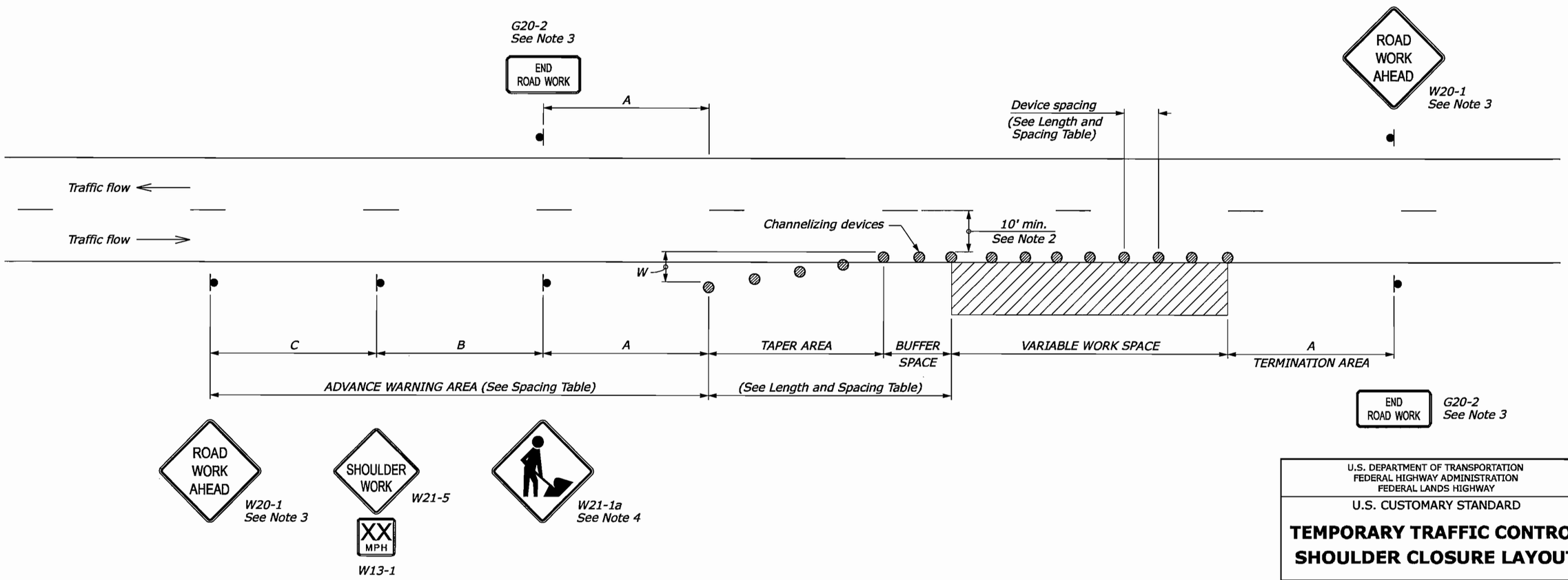

NO SCALE

U.S. DEPARTMENT OF TRANSPORTATION
FEDERAL HIGHWAY ADMINISTRATION
FEDERAL LANDS HIGHWAY

U.S. CUSTOMARY STANDARD

TEMPORARY TRAFFIC CONTROL SHOULDER CLOSURE LAYOUT

STANDARD APPROVED FOR USE 6/2005

REVISED:
DRAFT: 1/2007

STANDARD 635-B

6/19/2008 6:06:47 PM C:\PWworking\PITT\dms81082\st63510.dgn

REG	STATE	PROJECT	SHEET NO.
-	VA	VA-A-AD-48(1)	UT1

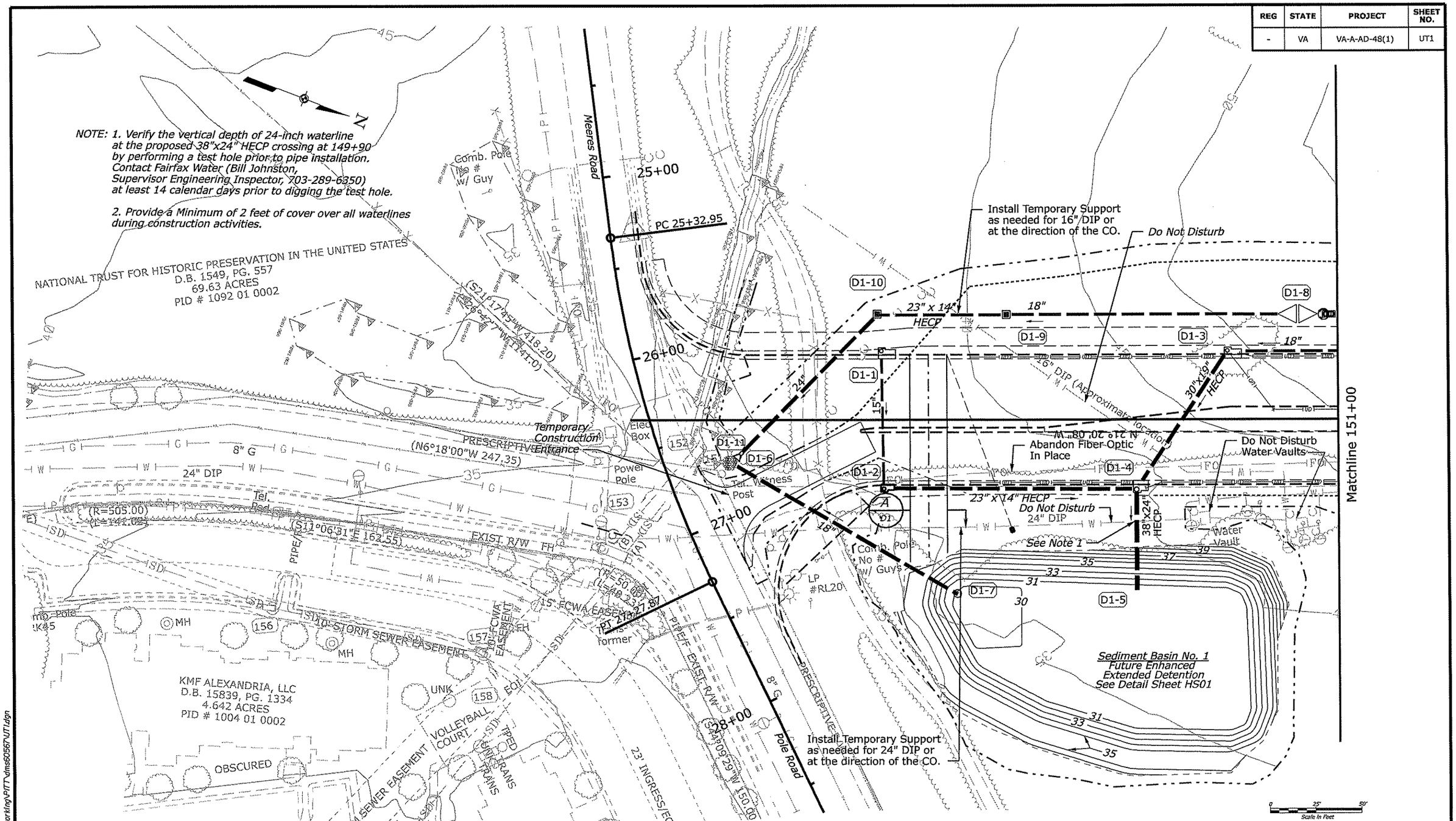

U.S. DEPARTMENT OF TRANSPORTATION
FEDERAL HIGHWAY ADMINISTRATION
EASTERN FEDERAL LANDS HIGHWAY DIVISION
STERLING, VIRGINIA

FORT BELVOIR - MULLIGAN ROAD

UTILITY PLAN

Mulligan Road
147+25.96 to 151+00

Sheet 1 of 10

7/10/2008 12:11:36 PM C:\PWworking\PITT\dms60567\UT1.dgn

REG	STATE	PROJECT	SHEET NO.
-	VA	VA-A-AD-48(1)	UT2

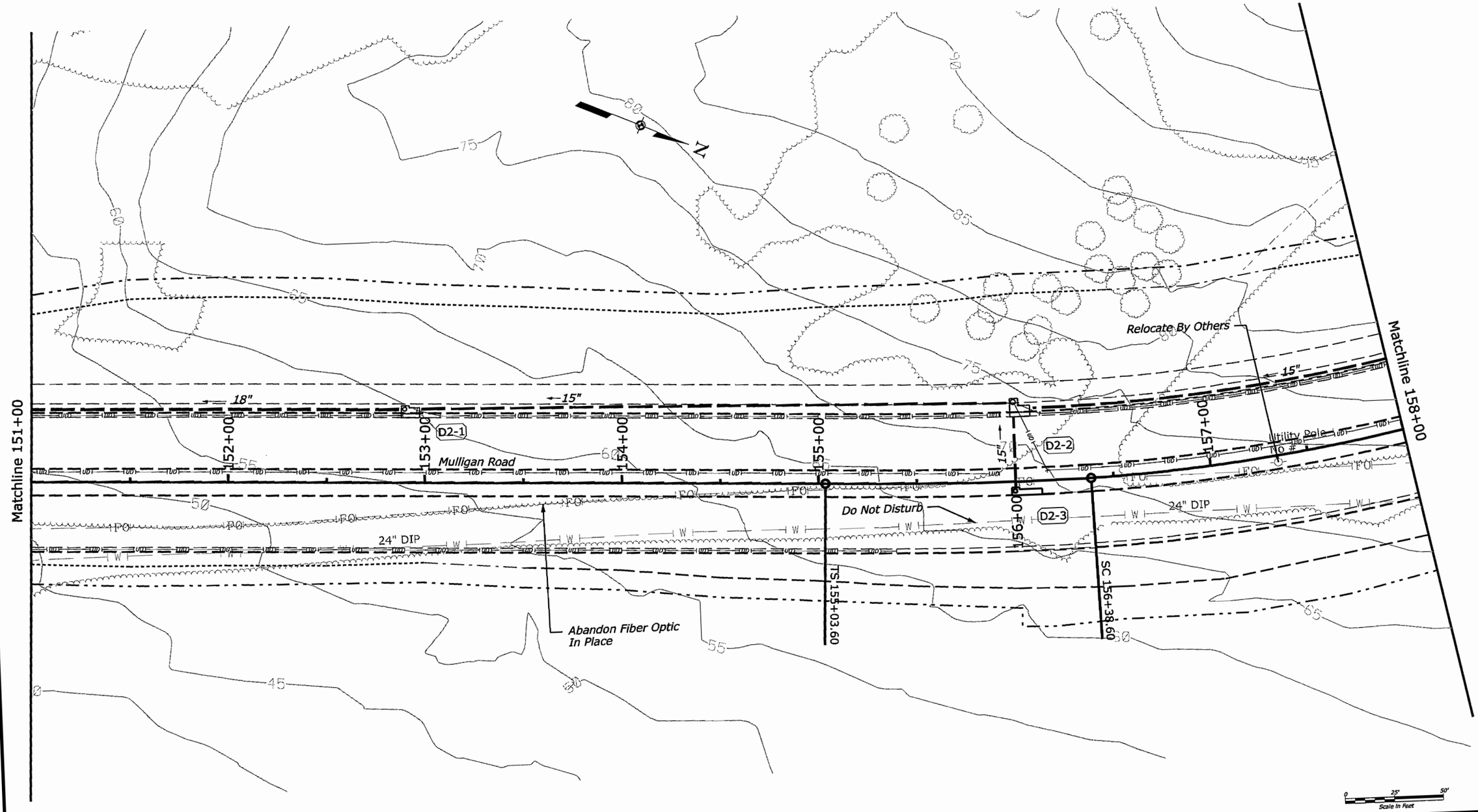

U.S. DEPARTMENT OF TRANSPORTATION
FEDERAL HIGHWAY ADMINISTRATION
EASTERN FEDERAL LANDS HIGHWAY DIVISION
STERLING, VIRGINIA

FORT BELVOIR - MULLIGAN ROAD

UTILITY PLAN

Mulligan Road
151+00 to 158+00

Sheet 2 of 10

6/19/2008 10:13:44 AM C:\PWworking\PITT\dms60567\UT2.dgn

REG	STATE	PROJECT	SHEET NO.
-	VA	VA-A-AD-48(1)	UT3

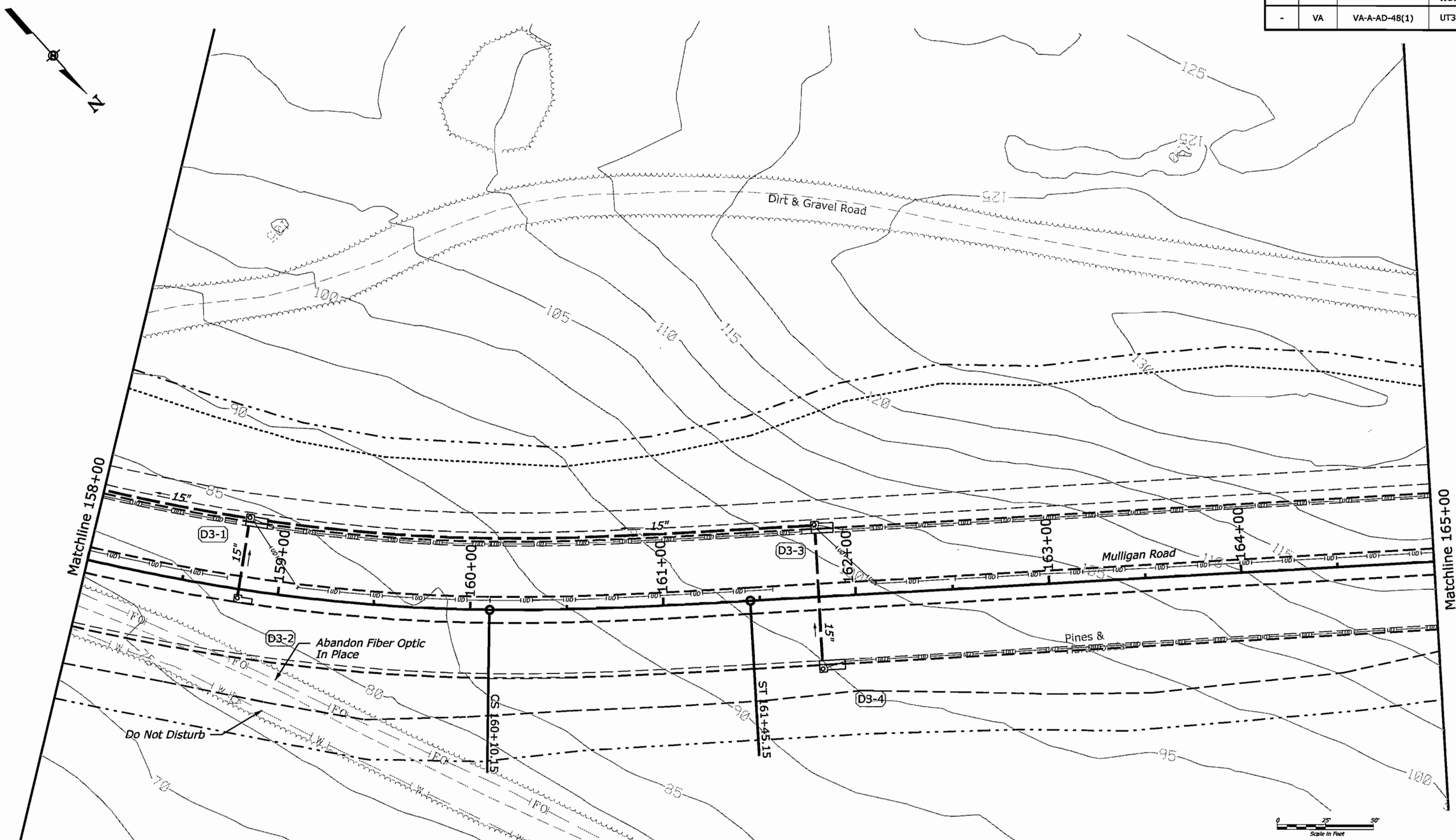

U.S. DEPARTMENT OF TRANSPORTATION
FEDERAL HIGHWAY ADMINISTRATION
EASTERN FEDERAL LANDS HIGHWAY DIVISION
STERLING, VIRGINIA

FORT BELVOIR - MULLIGAN ROAD

UTILITY PLAN

Mulligan Road
158+00 to 165+00

Sheet 3 of 10

6/19/2008 1:25:22 PM C:\PWworking\PITT\dms60567\UT3.dgn

REG	STATE	PROJECT	SHEET NO.
-	VA	VA-A-AD-48(1)	UT4

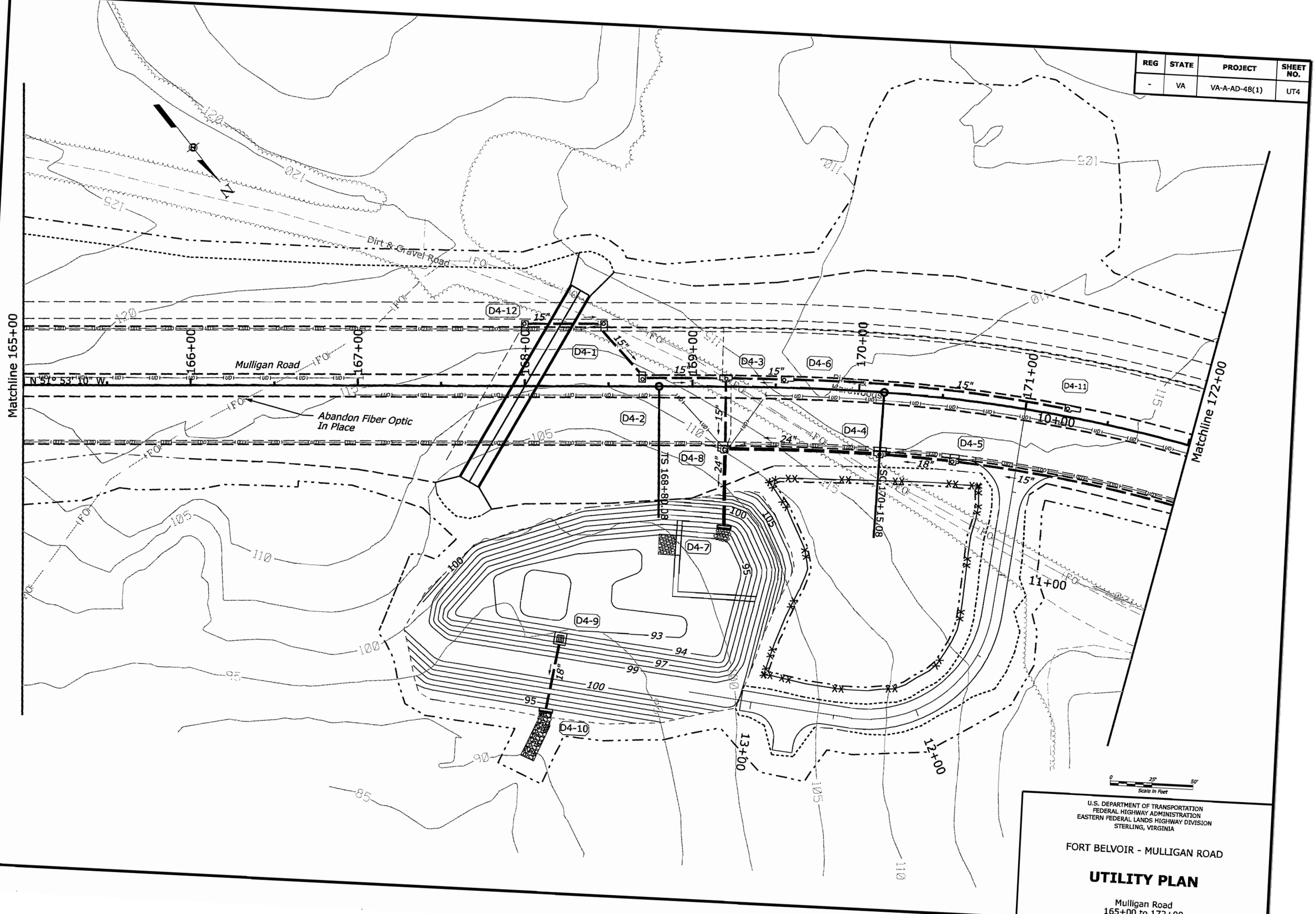

U.S. DEPARTMENT OF TRANSPORTATION
FEDERAL HIGHWAY ADMINISTRATION
EASTERN FEDERAL LANDS HIGHWAY DIVISION
STERLING, VIRGINIA

FORT BELVOIR - MULLIGAN ROAD

UTILITY PLAN

Mulligan Road
165+00 to 172+00

6/13/2008 3:22:25 PM c:\pwworking\dlth\dms60567\UT4.dgn

REG	STATE	PROJECT	SHEET NO.
-	VA	VA-A-AD-48(1)	UT5

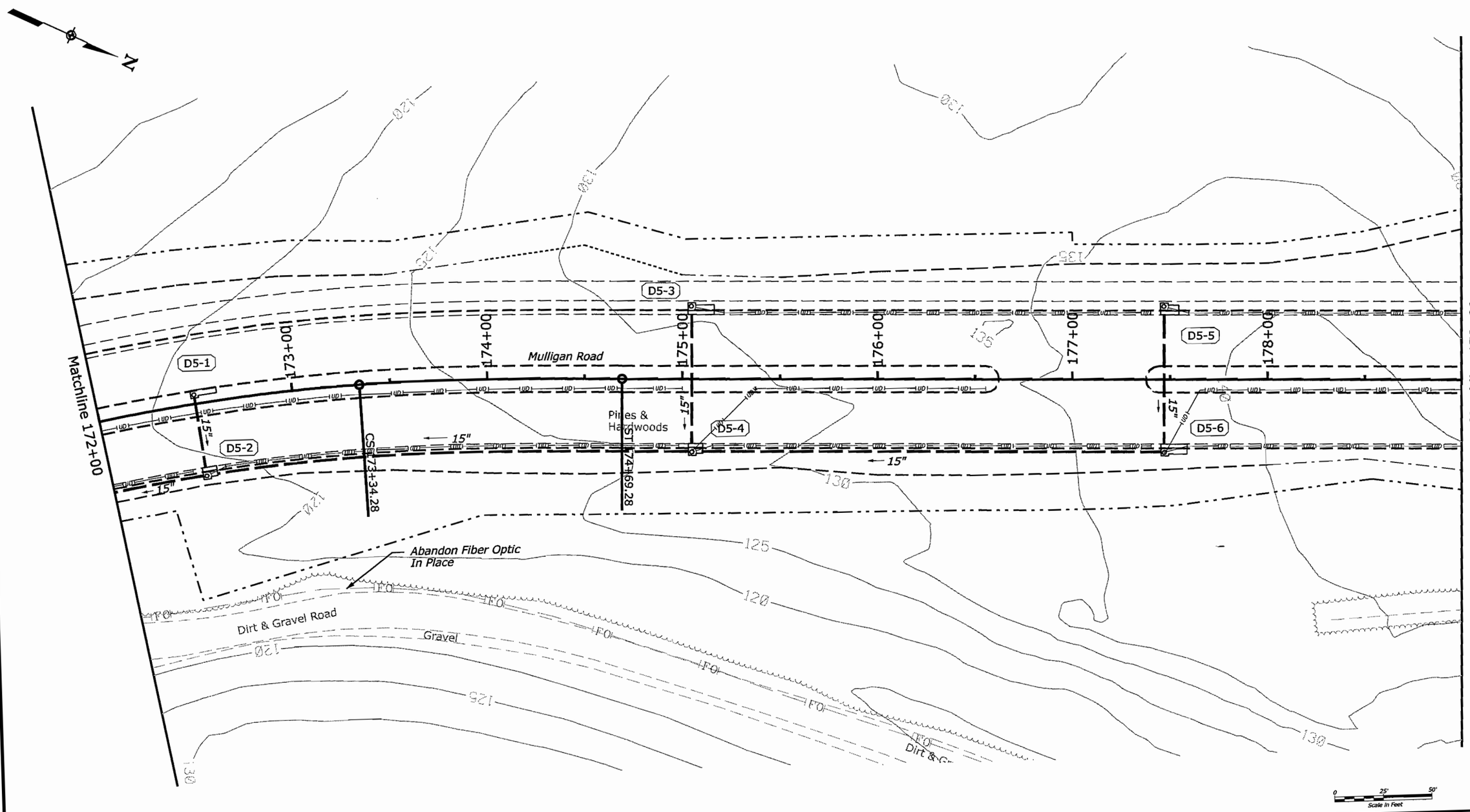

U.S. DEPARTMENT OF TRANSPORTATION
FEDERAL HIGHWAY ADMINISTRATION
EASTERN FEDERAL LANDS HIGHWAY DIVISION
STERLING, VIRGINIA

FORT BELVOIR - MULLIGAN ROAD

UTILITY PLAN

Mulligan Road
172+00 to 179+00

Sheet 5 of 10

6/13/2008 3:23:41 PM c:\pwworking\pth\dms60567\UT5.dgn

REG	STATE	PROJECT	SHEET NO.
-	VA	VA-A-AD-48(1)	UT6

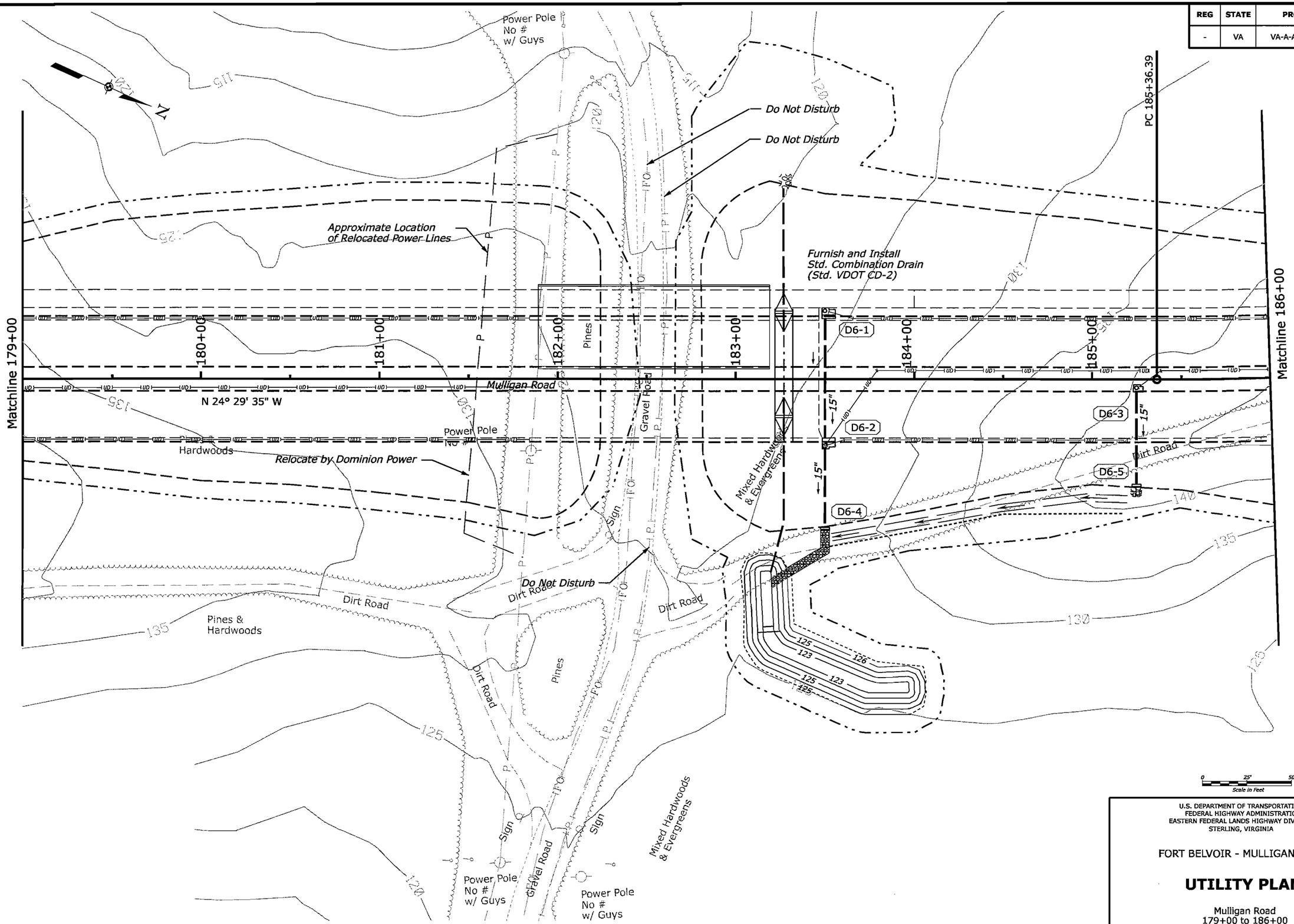

U.S. DEPARTMENT OF TRANSPORTATION
FEDERAL HIGHWAY ADMINISTRATION
EASTERN FEDERAL LANDS HIGHWAY DIVISION
STERLING, VIRGINIA

FORT BELVOIR - MULLIGAN ROAD

UTILITY PLAN

Mulligan Road
179+00 to 186+00

6/13/2008 3:25:56 PM c:\pwworking\plth\dms50567\UT6.dgn

REG	STATE	PROJECT	SHEET NO.
-	VA	VA-A-AD-48(1)	UT7

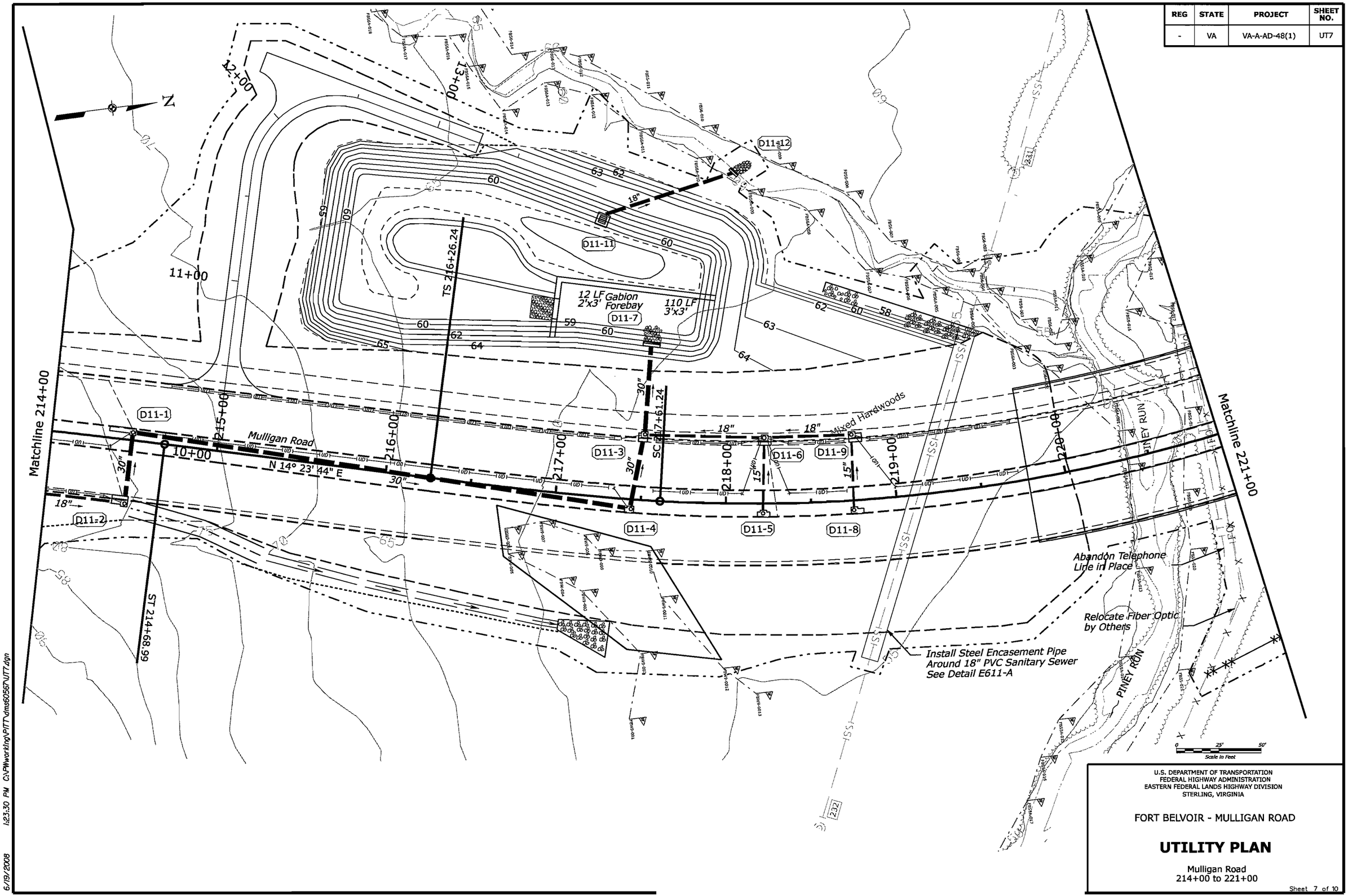

U.S. DEPARTMENT OF TRANSPORTATION
FEDERAL HIGHWAY ADMINISTRATION
EASTERN FEDERAL LANDS HIGHWAY DIVISION
STERLING, VIRGINIA

FORT BELVOIR - MULLIGAN ROAD

UTILITY PLAN

Mulligan Road
214+00 to 221+00

Sheet 7 of 10

6/19/2008 1:23:30 PM C:\PWworking\PITT\dms6056\UT7.dgn

REG	STATE	PROJECT	SHEET NO.
-	VA	VA-A-AD-48(1)	UT8

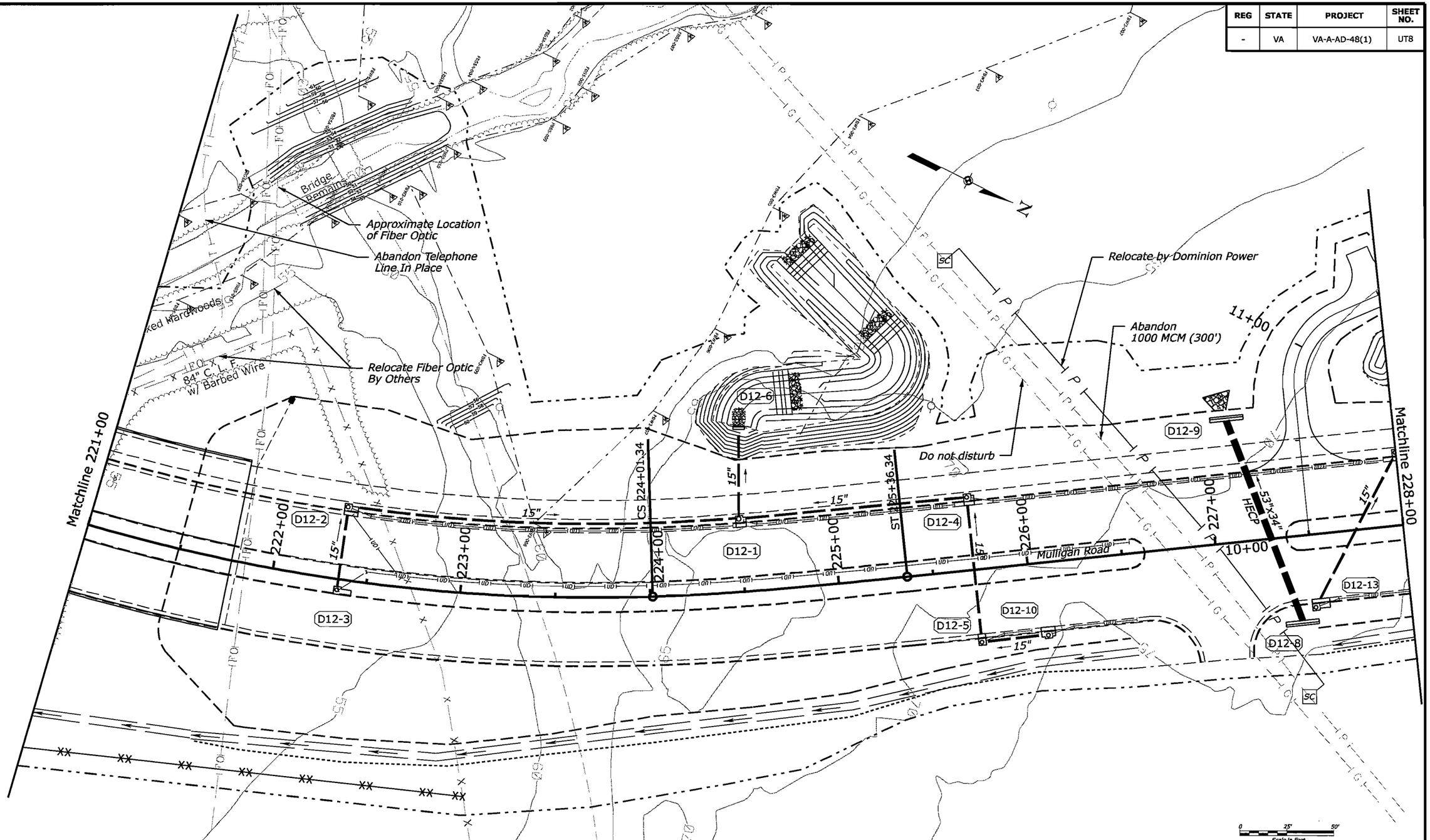

U.S. DEPARTMENT OF TRANSPORTATION
FEDERAL HIGHWAY ADMINISTRATION
EASTERN FEDERAL LANDS HIGHWAY DIVISION
STERLING, VIRGINIA

FORT BELVOIR - MULLIGAN ROAD

UTILITY PLAN

Mulligan Road
221+00 to 228+00

6/13/2008 3:28:16 PM c:\pwworking\dlh\dms60567\UT8.dgn

REG	STATE	PROJECT	SHEET NO.
-	VA	VA-A-AD-48(1)	UT9

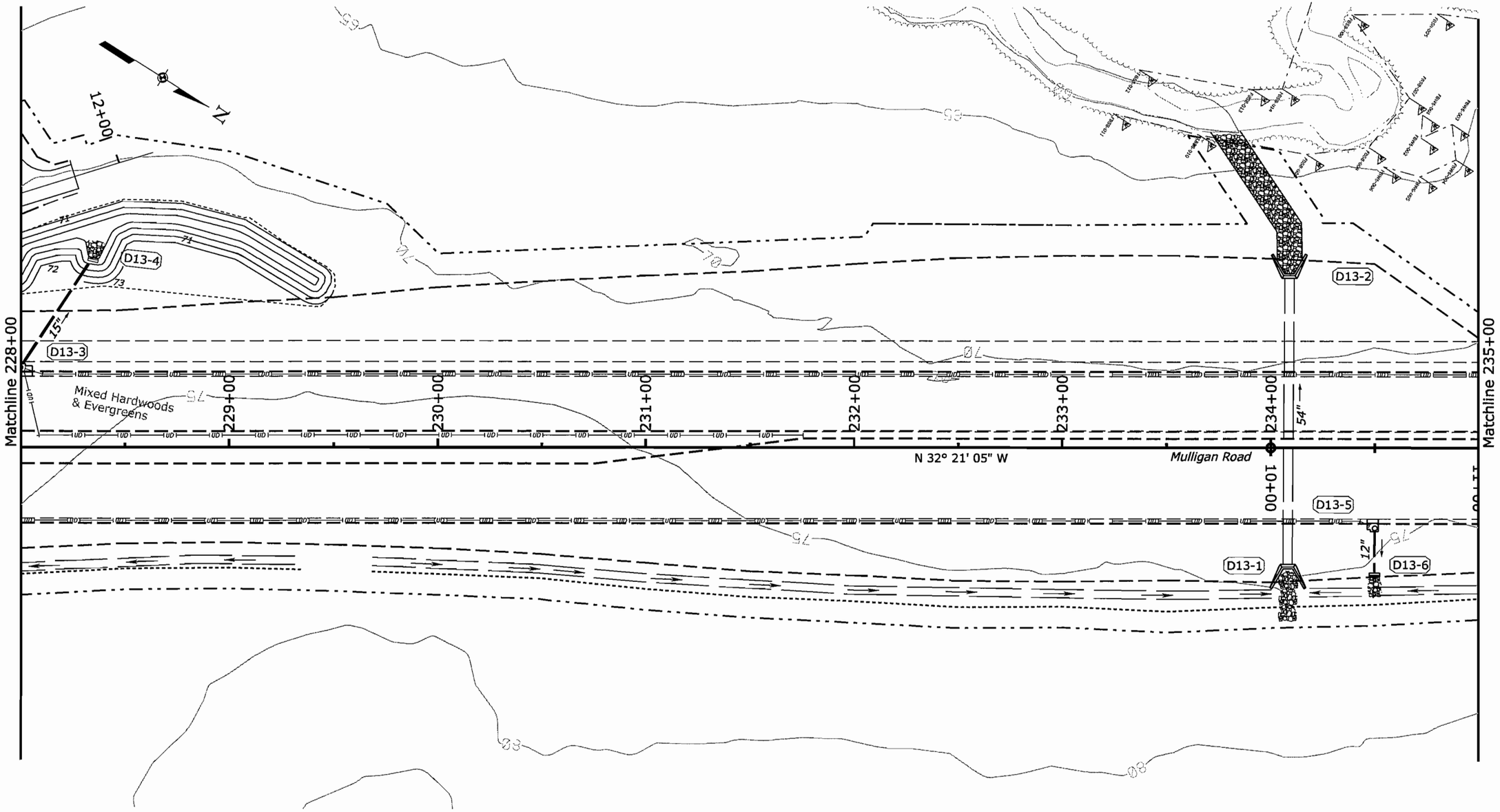

U.S. DEPARTMENT OF TRANSPORTATION
FEDERAL HIGHWAY ADMINISTRATION
EASTERN FEDERAL LANDS HIGHWAY DIVISION
STERLING, VIRGINIA

FORT BELVOIR - MULLIGAN ROAD

UTILITY PLAN

Mulligan Road
228+00 to 235+00

Sheet 9 of 10

6/13/2008 3:29:05 PM c:\pwworking\glh\dms60567\UT9.dgn

REG	STATE	PROJECT	SHEET NO.
-	VA	VA-A-AD-48(1)	UT10

U.S. DEPARTMENT OF TRANSPORTATION
FEDERAL HIGHWAY ADMINISTRATION
EASTERN FEDERAL LANDS HIGHWAY DIVISION
STERLING, VIRGINIA

FORT BELVOIR - MULLIGAN ROAD

UTILITY PLAN

Mulligan Road
235+00 to 236+44.66

Sheet 10 of 10

6/13/2008 3:29:57 PM c:\pwworking\plth\dms60567\UT10.dgn

REG	STATE	PROJECT	SHEET NO.
-	VA	VA-A-AD-48(1)	T1

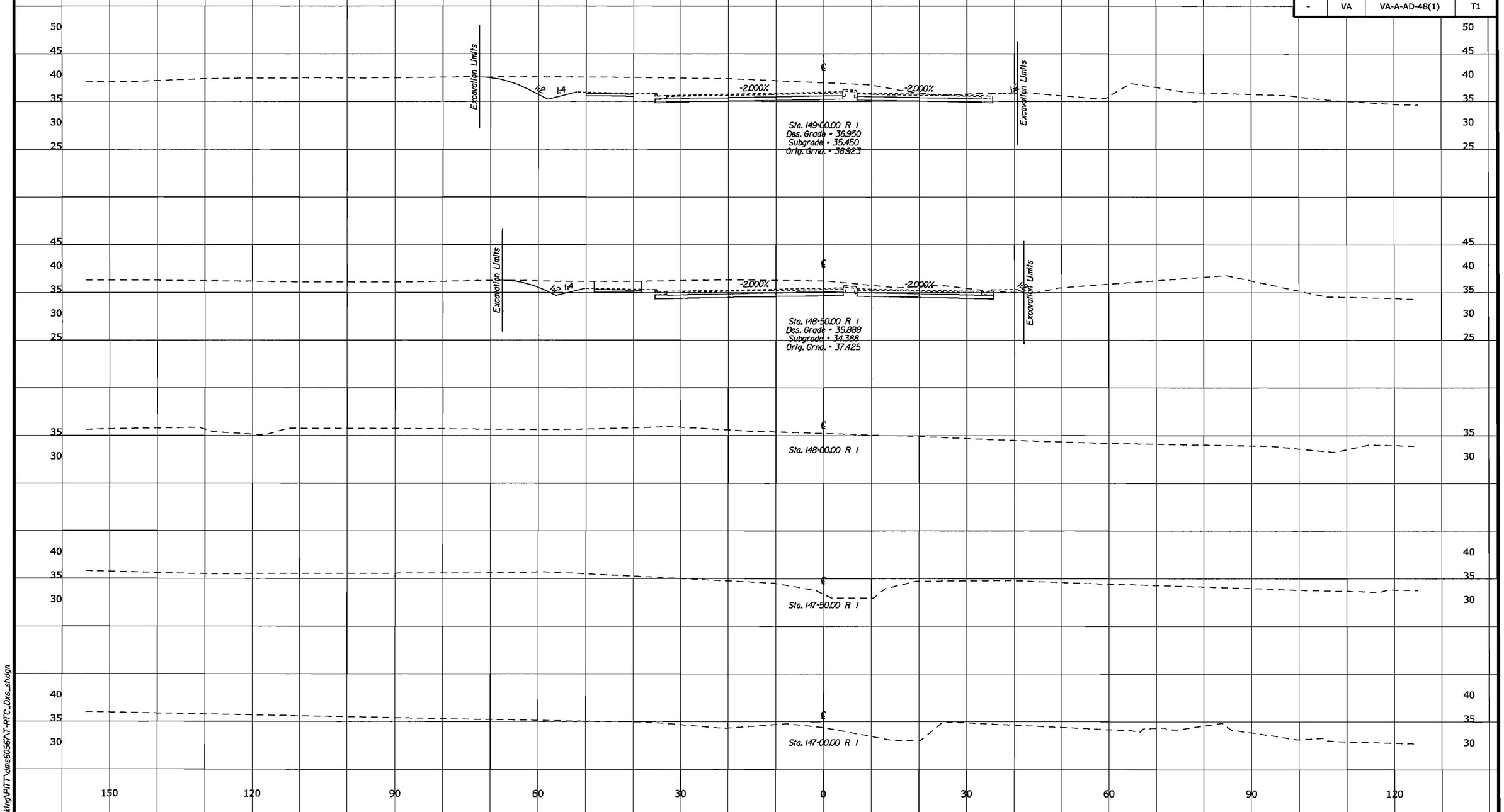

U.S. DEPARTMENT OF TRANSPORTATION
FEDERAL HIGHWAY ADMINISTRATION
EASTERN FEDERAL LANDS HIGHWAY DIVISION
STERLING, VIRGINIA

FORT BELVOIR - MULLIGAN ROAD

CROSS SECTIONS

MULLIGAN ROAD

147+00.00 TO 149+00.00

6/10/2008 10:16:48 AM C:\PWworking\PITT\dms60567\T-RTC_Dxs_sh.dgn

REG	STATE	PROJECT	SHEET NO.
-	VA	VA-A-AD-48(1)	T2

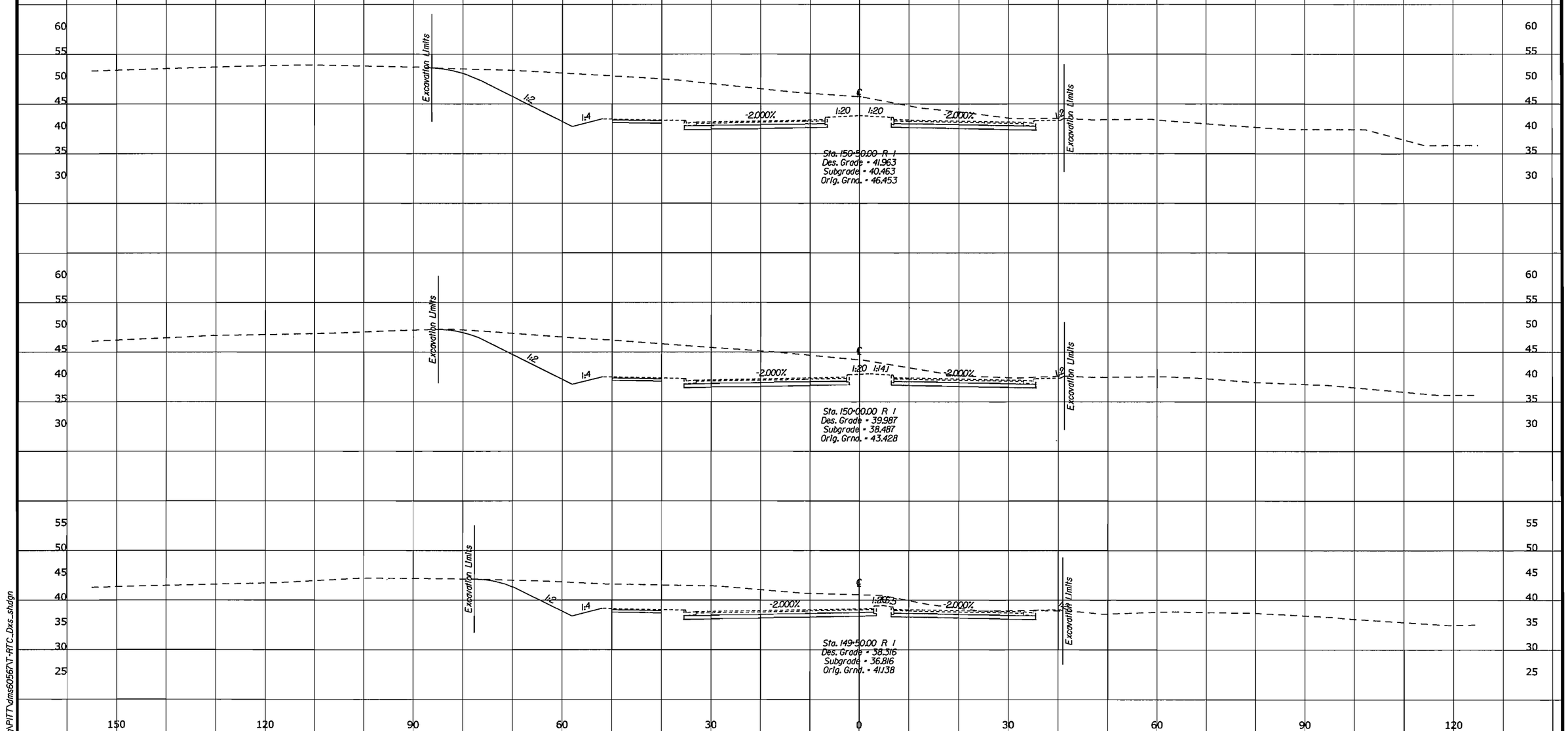

U.S. DEPARTMENT OF TRANSPORTATION
FEDERAL HIGHWAY ADMINISTRATION
EASTERN FEDERAL LANDS HIGHWAY DIVISION
STERLING, VIRGINIA

FORT BELVOIR - MULLIGAN ROAD

CROSS SECTIONS

MULLIGAN ROAD

149+50.00 TO 150+50.00

6/10/2008 10:16:48 AM;\PWworking\PITT\dms50567\T-RTC_Dxs_shdgn

REG	STATE	PROJECT	SHEET NO.
-	VA	VA-A-AD-48(1)	T3

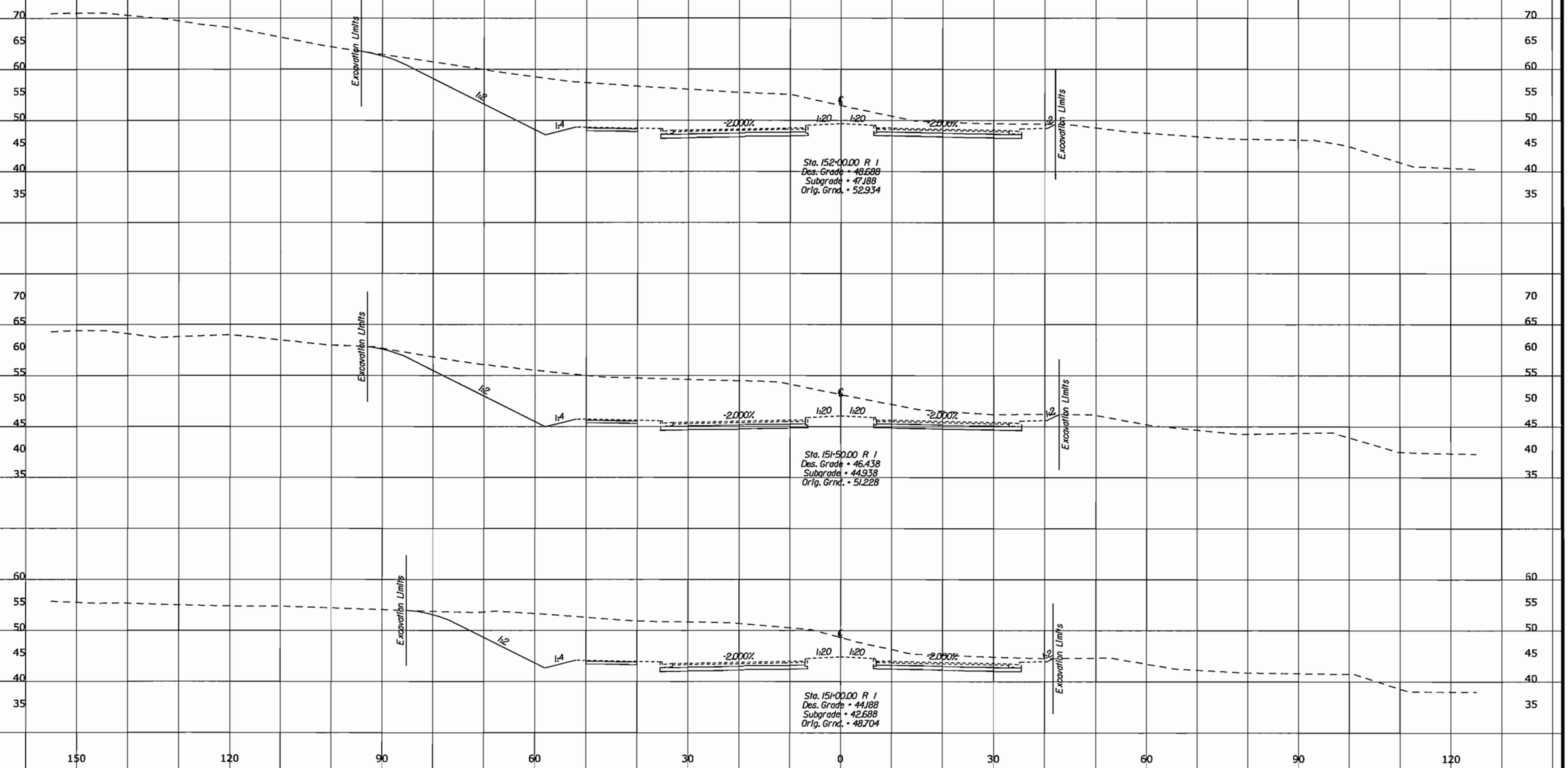

U.S. DEPARTMENT OF TRANSPORTATION
FEDERAL HIGHWAY ADMINISTRATION
EASTERN FEDERAL LANDS HIGHWAY DIVISION
STERLING, VIRGINIA

FORT BELVOIR - MULLIGAN ROAD

CROSS SECTIONS

MULLIGAN ROAD

151+00.00 TO 152+00.00

6/10/2008 10:16:48 AM;\PWworking\PITT\dms60567\T-RTC_Dxs.dgn

REG	STATE	PROJECT	SHEET NO.
-	VA	VA-A-AD-48(1)	T4

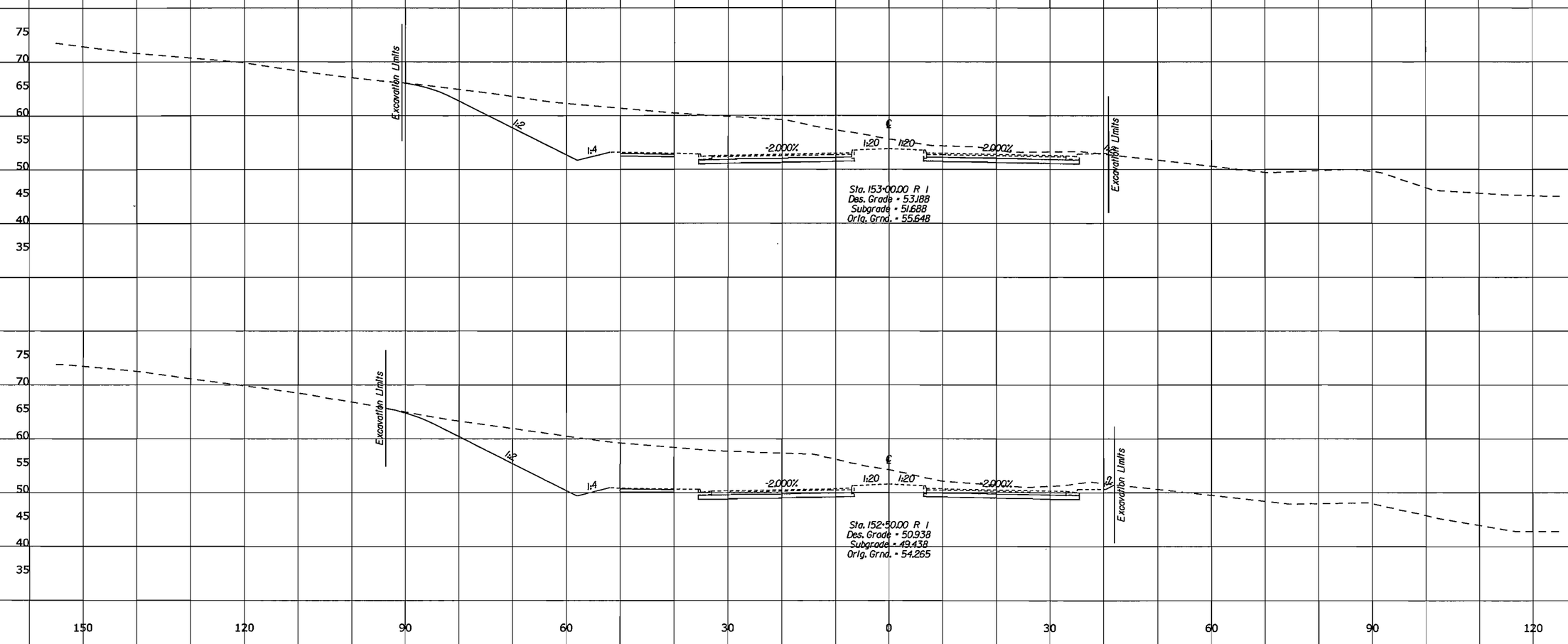

U.S. DEPARTMENT OF TRANSPORTATION
FEDERAL HIGHWAY ADMINISTRATION
EASTERN FEDERAL LANDS HIGHWAY DIVISION
STERLING, VIRGINIA

FORT BELVOIR - MULLIGAN ROAD

CROSS SECTIONS

MULLIGAN ROAD

152+50.00 TO 153+00.00

6/10/2008 10:06:49 AM:\PWworking\PITT\dms60567\T-RTC_Dxs_shdgn

REG	STATE	PROJECT	SHEET NO.
-	VA	VA-A-AD-48(1)	T5

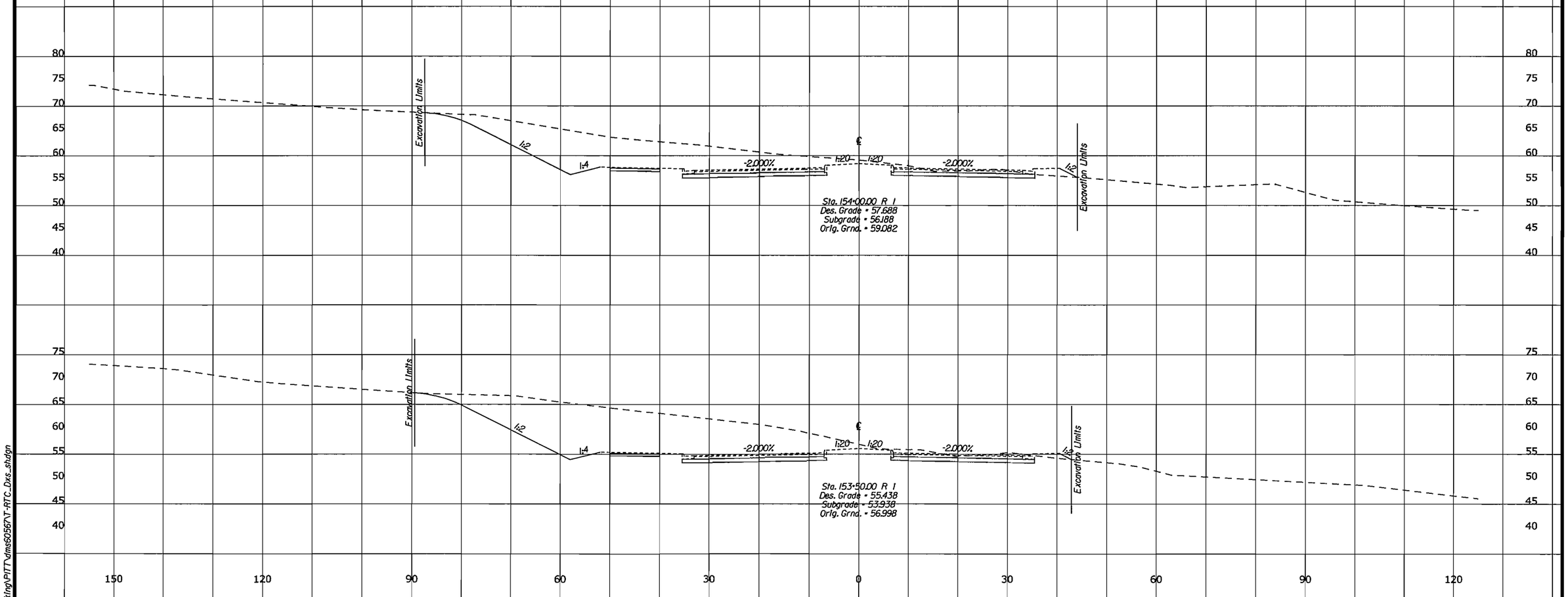

U.S. DEPARTMENT OF TRANSPORTATION
FEDERAL HIGHWAY ADMINISTRATION
EASTERN FEDERAL LANDS HIGHWAY DIVISION
STERLING, VIRGINIA

FORT BELVOIR - MULLIGAN ROAD

CROSS SECTIONS

MULLIGAN ROAD

153+50.00 TO 154+00.00

6/10/2008 10:16:49 AM C:\PWworking\PITT\dms50567\T-RTC_Dxs_shdgn

REG	STATE	PROJECT	SHEET NO.
-	VA	VA-A-AD-48(1)	T6

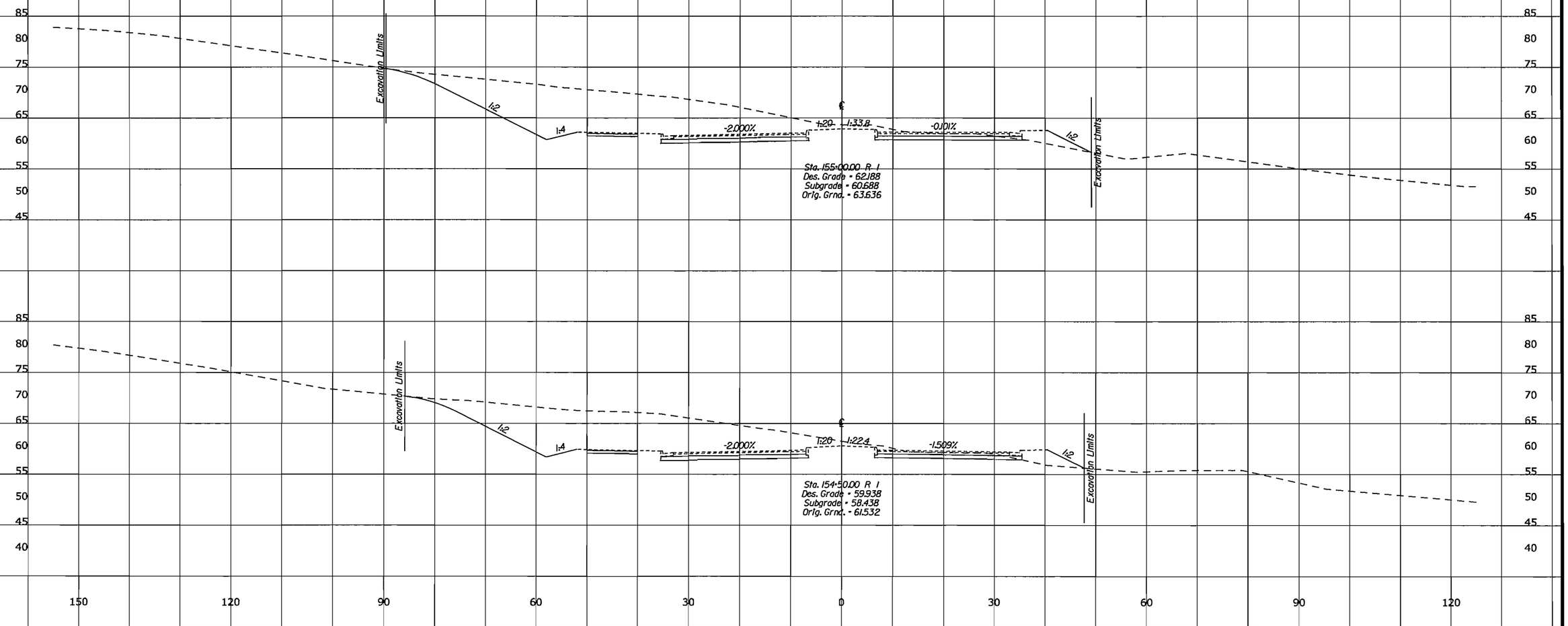

U.S. DEPARTMENT OF TRANSPORTATION
FEDERAL HIGHWAY ADMINISTRATION
EASTERN FEDERAL LANDS HIGHWAY DIVISION
STERLING, VIRGINIA

FORT BELVOIR - MULLIGAN ROAD

CROSS SECTIONS

MULLIGAN ROAD

154+50.00 TO 155+00.00

6/10/2008 10:16:49 AM C:\PWworking\PITT\dms60567\T-RTC_Dxs_shdgn

REG	STATE	PROJECT	SHEET NO.
-	VA	VA-A-AD-48(1)	T7

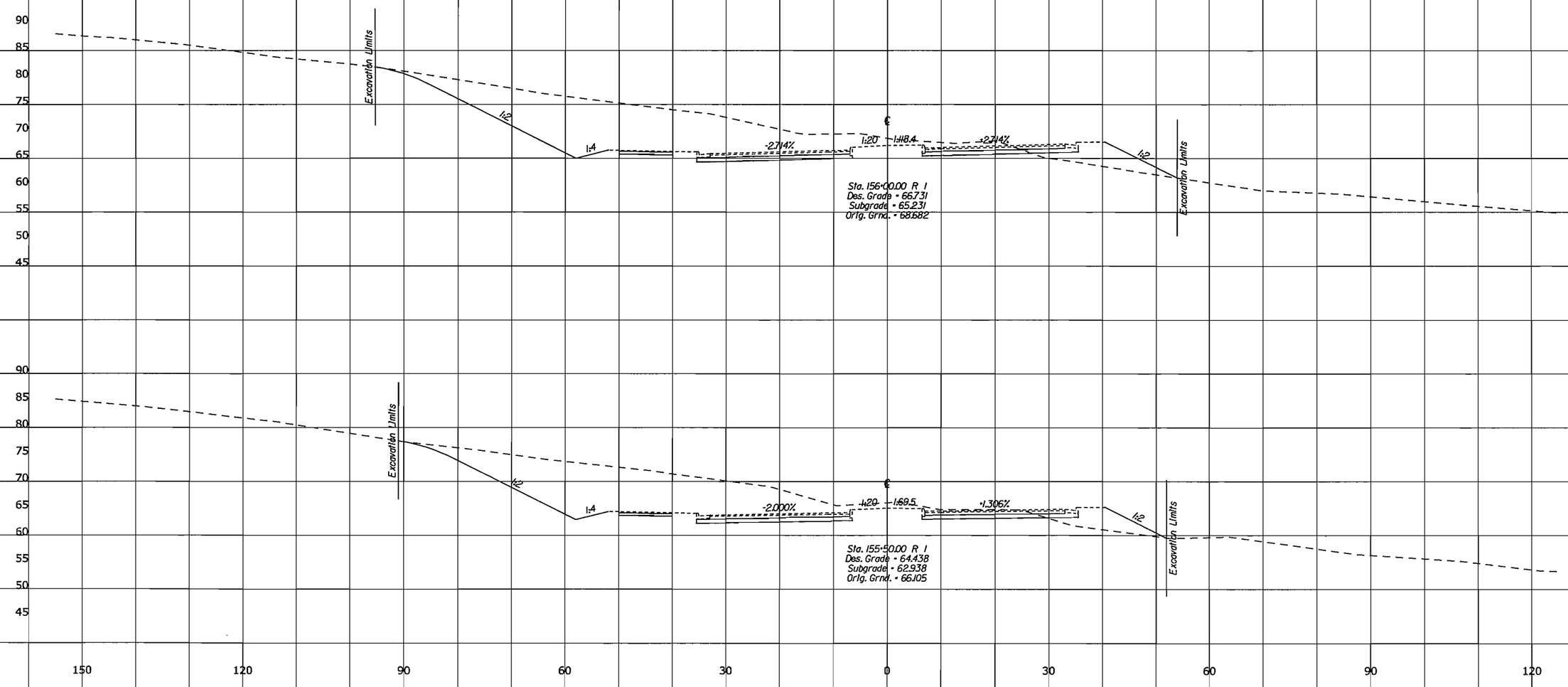

U.S. DEPARTMENT OF TRANSPORTATION
FEDERAL HIGHWAY ADMINISTRATION
EASTERN FEDERAL LANDS HIGHWAY DIVISION
STERLING, VIRGINIA

FORT BELVOIR - MULLIGAN ROAD

CROSS SECTIONS

MULLIGAN ROAD

155+50.00 TO 156+00.00

6/10/2008 10:16:49 AM C:\PWworking\PITT\dms60567\T-RTC_Dxs_shdgn

REG	STATE	PROJECT	SHEET NO.
-	VA	VA-A-AD-48(1)	T8

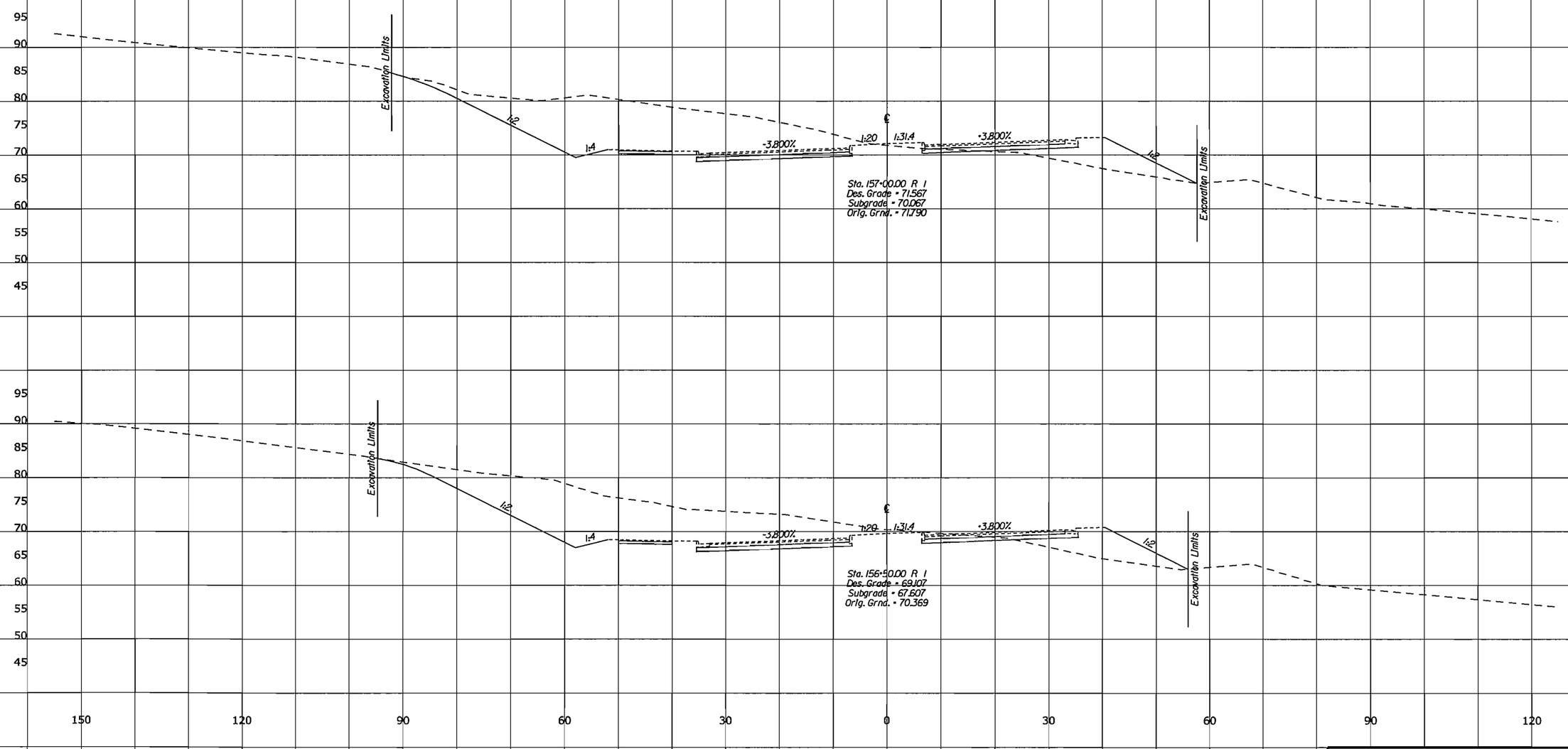

U.S. DEPARTMENT OF TRANSPORTATION
FEDERAL HIGHWAY ADMINISTRATION
EASTERN FEDERAL LANDS HIGHWAY DIVISION
STERLING, VIRGINIA

FORT BELVOIR - MULLIGAN ROAD

CROSS SECTIONS

MULLIGAN ROAD

156+50.00 TO 157+00.00

6/10/2008 10:16:49 AM C:\PWworking\PITT\dms60567\T-RTC_Dxs_sht.dgn

REG	STATE	PROJECT	SHEET NO.
-	VA	VA-A-AD-48(1)	T9

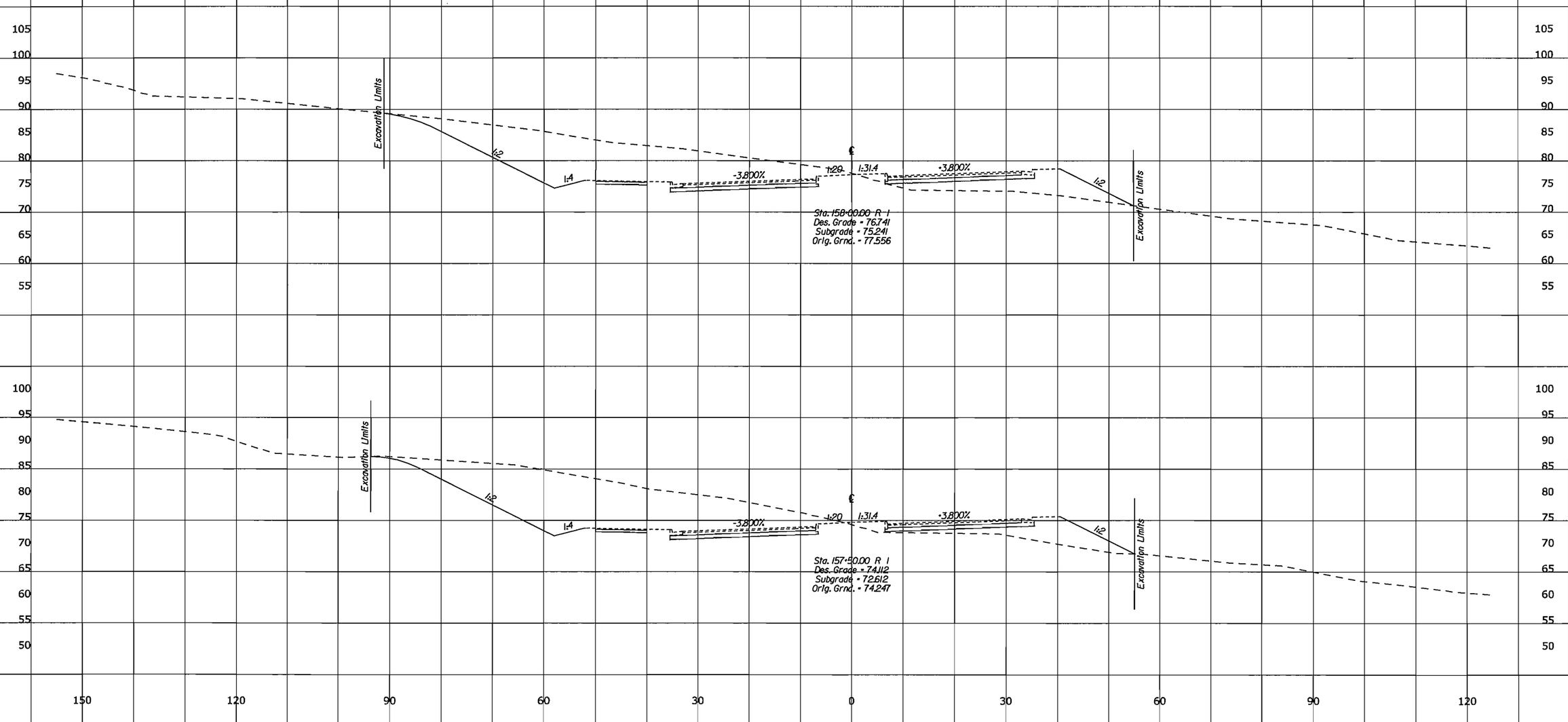

U.S. DEPARTMENT OF TRANSPORTATION
FEDERAL HIGHWAY ADMINISTRATION
EASTERN FEDERAL LANDS HIGHWAY DIVISION
STERLING, VIRGINIA

FORT BELVOIR - MULLIGAN ROAD

CROSS SECTIONS

MULLIGAN ROAD

157+50.00 TO 158+00.00

6/10/2008 10:16:49 AM:\PWworking\PITT\dms50567\T-RTC_Dxs.shdgn

REG	STATE	PROJECT	SHEET NO.
-	VA	VA-A-AD-48(1)	T10

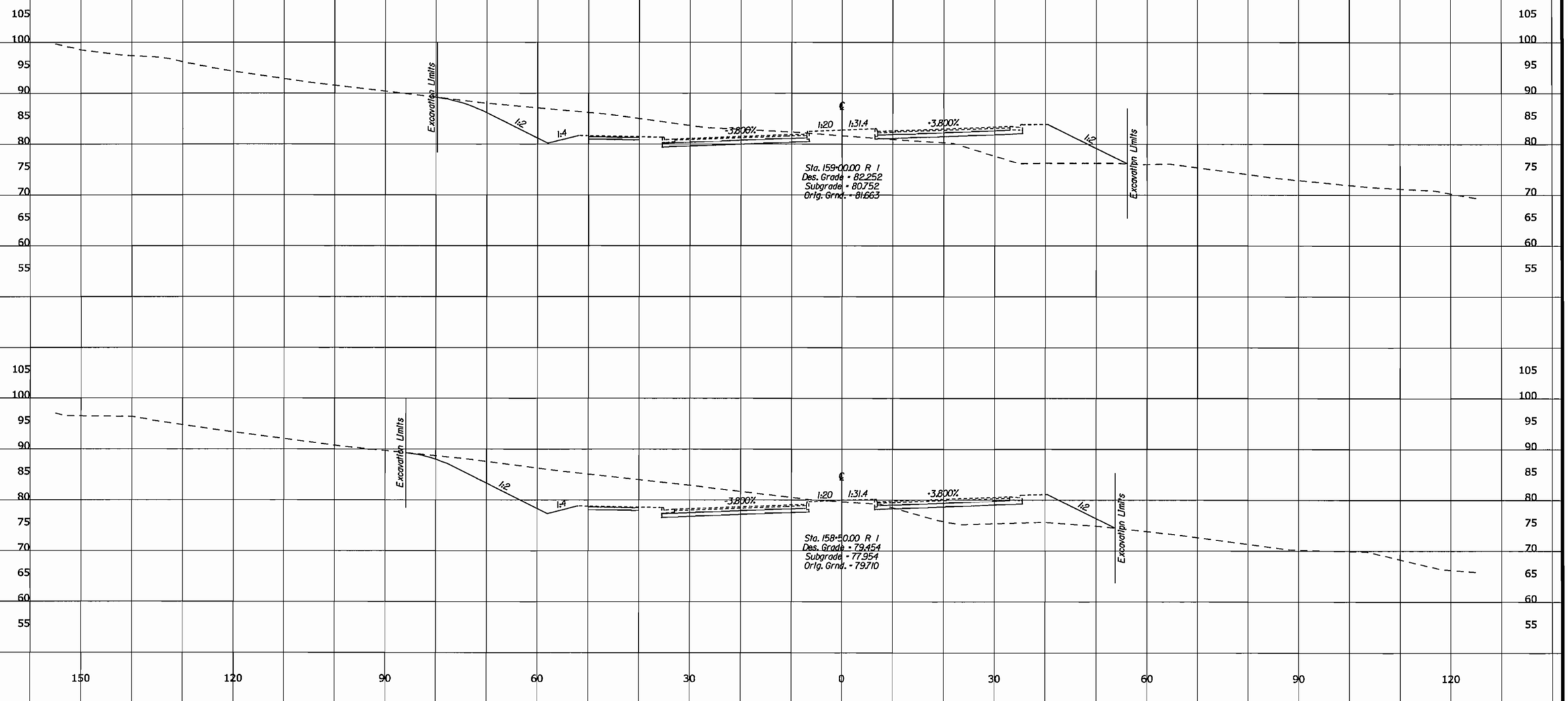

U.S. DEPARTMENT OF TRANSPORTATION
FEDERAL HIGHWAY ADMINISTRATION
EASTERN FEDERAL LANDS HIGHWAY DIVISION
STERLING, VIRGINIA

FORT BELVOIR - MULLIGAN ROAD

CROSS SECTIONS

MULLIGAN ROAD

158+50.00 TO 159+00.00

6/10/2008 10:16:49 AM C:\PWworking\PITT\dms50556\T-RTC_Dxs_sht.dgn

REG	STATE	PROJECT	SHEET NO.
-	VA	VA-A-AD-48(1)	T11

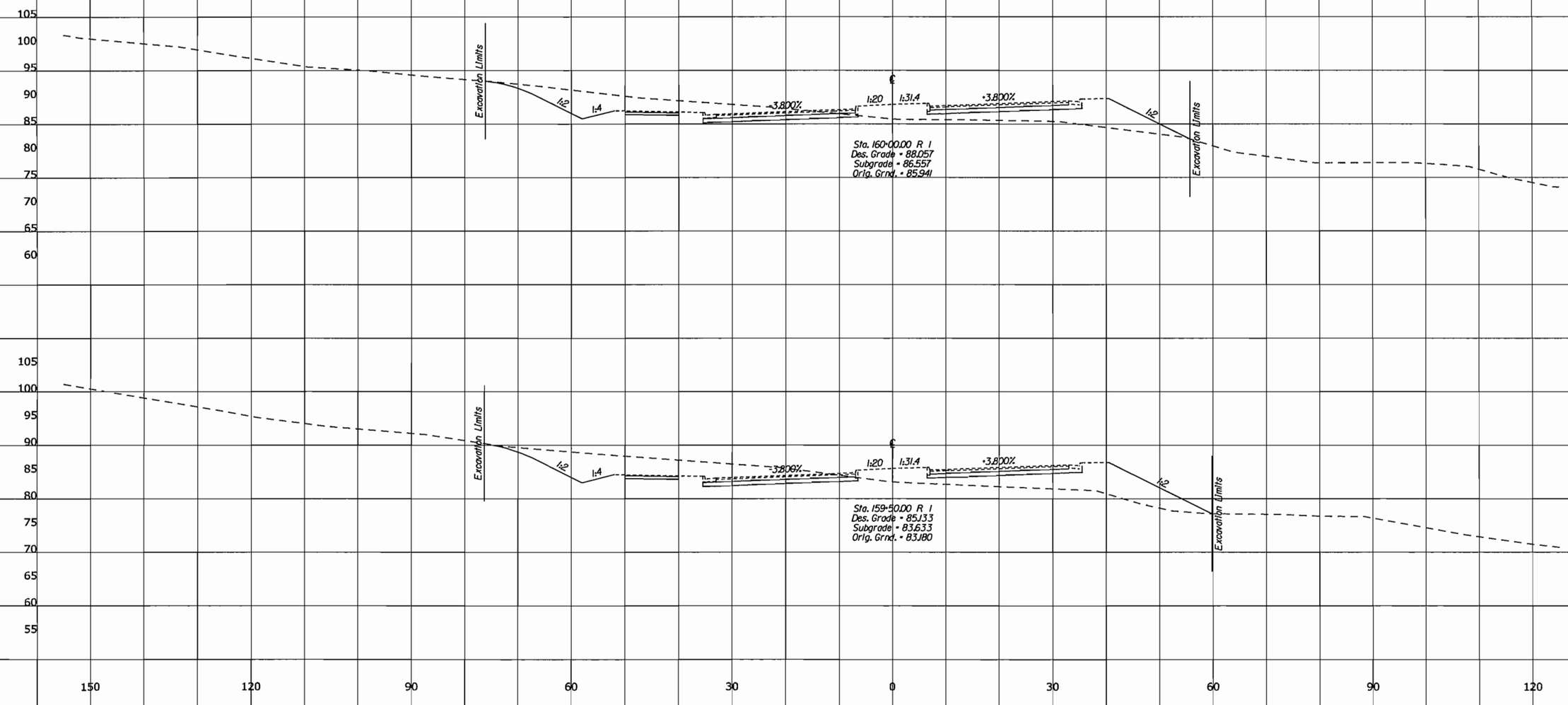

U.S. DEPARTMENT OF TRANSPORTATION
FEDERAL HIGHWAY ADMINISTRATION
EASTERN FEDERAL LANDS HIGHWAY DIVISION
STERLING, VIRGINIA

FORT BELVOIR - MULLIGAN ROAD

CROSS SECTIONS

MULLIGAN ROAD

159+50.00 TO 160+00.00

6/10/2008 10:46:50 AM:\PWworking\PITT\dms60567\T-RTC_Dxs_sh.dgn

REG	STATE	PROJECT	SHEET NO.
-	VA	VA-A-AD-48(1)	T12

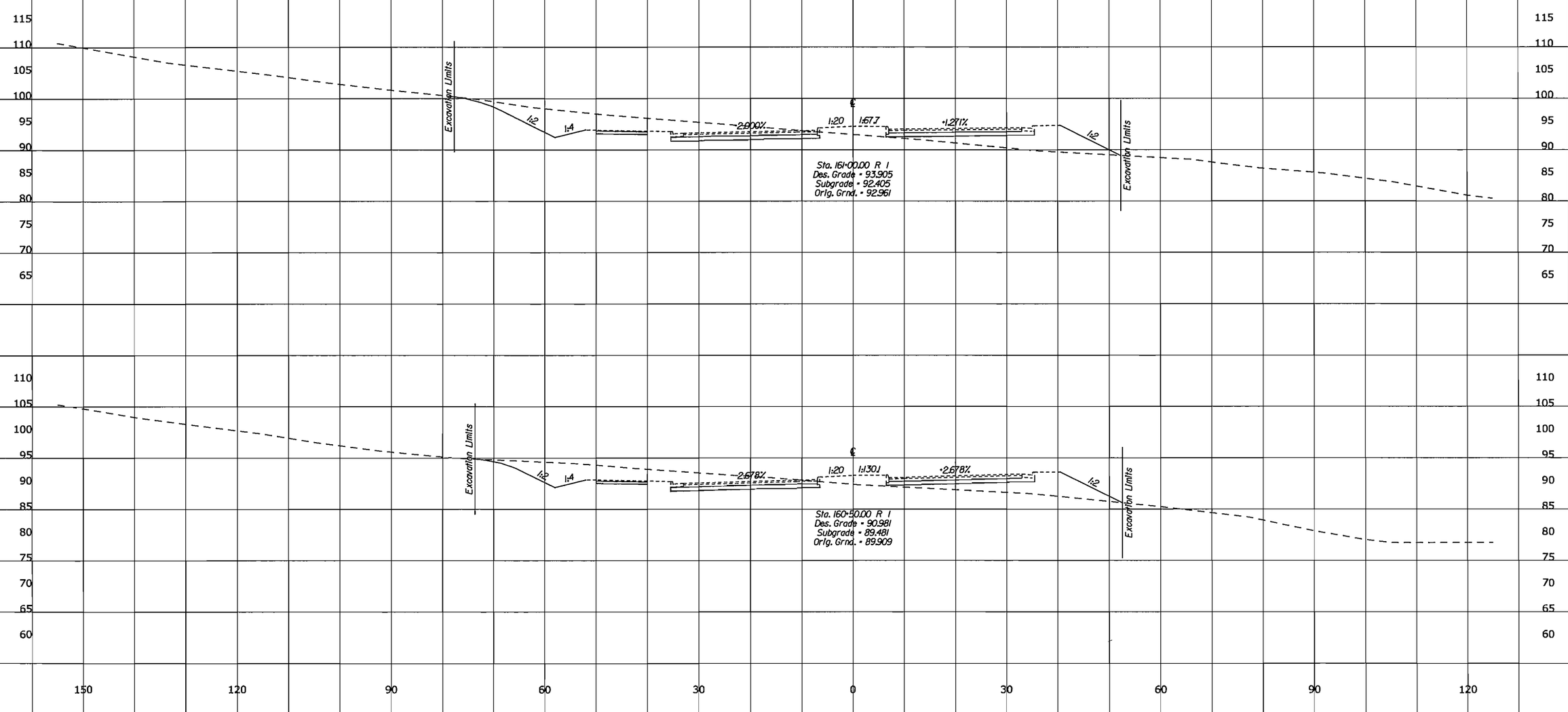

U.S. DEPARTMENT OF TRANSPORTATION
FEDERAL HIGHWAY ADMINISTRATION
EASTERN FEDERAL LANDS HIGHWAY DIVISION
STERLING, VIRGINIA

FORT BELVOIR - MULLIGAN ROAD

CROSS SECTIONS

MULLIGAN ROAD

160+50.00 TO 161+00.00

6/10/2008 10:16:50 AM:\PWworking\PITT\dms60567\T-RTC_Dxs_shdgn

REG	STATE	PROJECT	SHEET NO.
-	VA	VA-A-AD-48(1)	T13

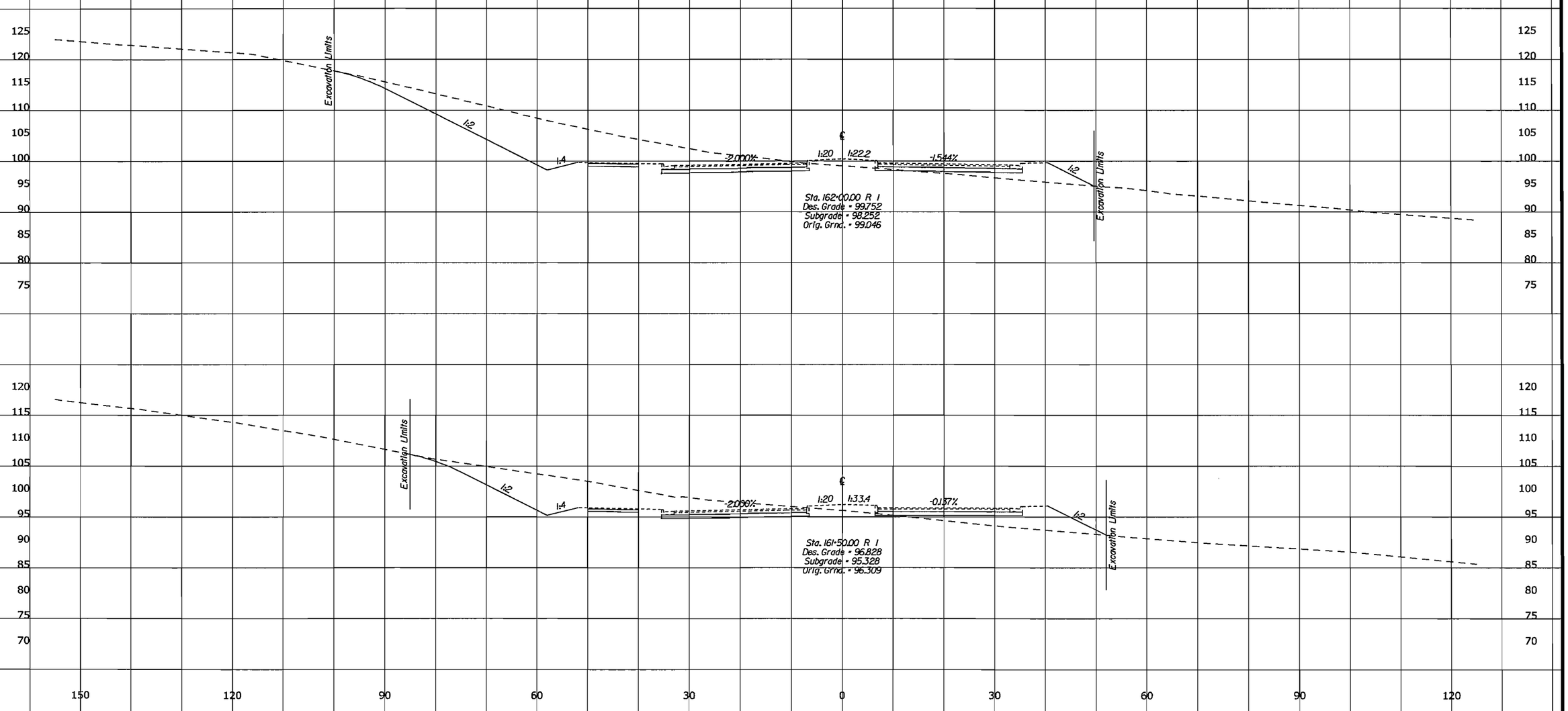

U.S. DEPARTMENT OF TRANSPORTATION
FEDERAL HIGHWAY ADMINISTRATION
EASTERN FEDERAL LANDS HIGHWAY DIVISION
STERLING, VIRGINIA

FORT BELVOIR - MULLIGAN ROAD

CROSS SECTIONS

MULLIGAN ROAD

161+50.00 TO 162+00.00

6/10/2008 10:16:50 AM:\PWworking\PITT\dms60567\T-RTC_Dxs_shdgn

REG	STATE	PROJECT	SHEET NO.
-	VA	VA-A-AD-48(1)	T14

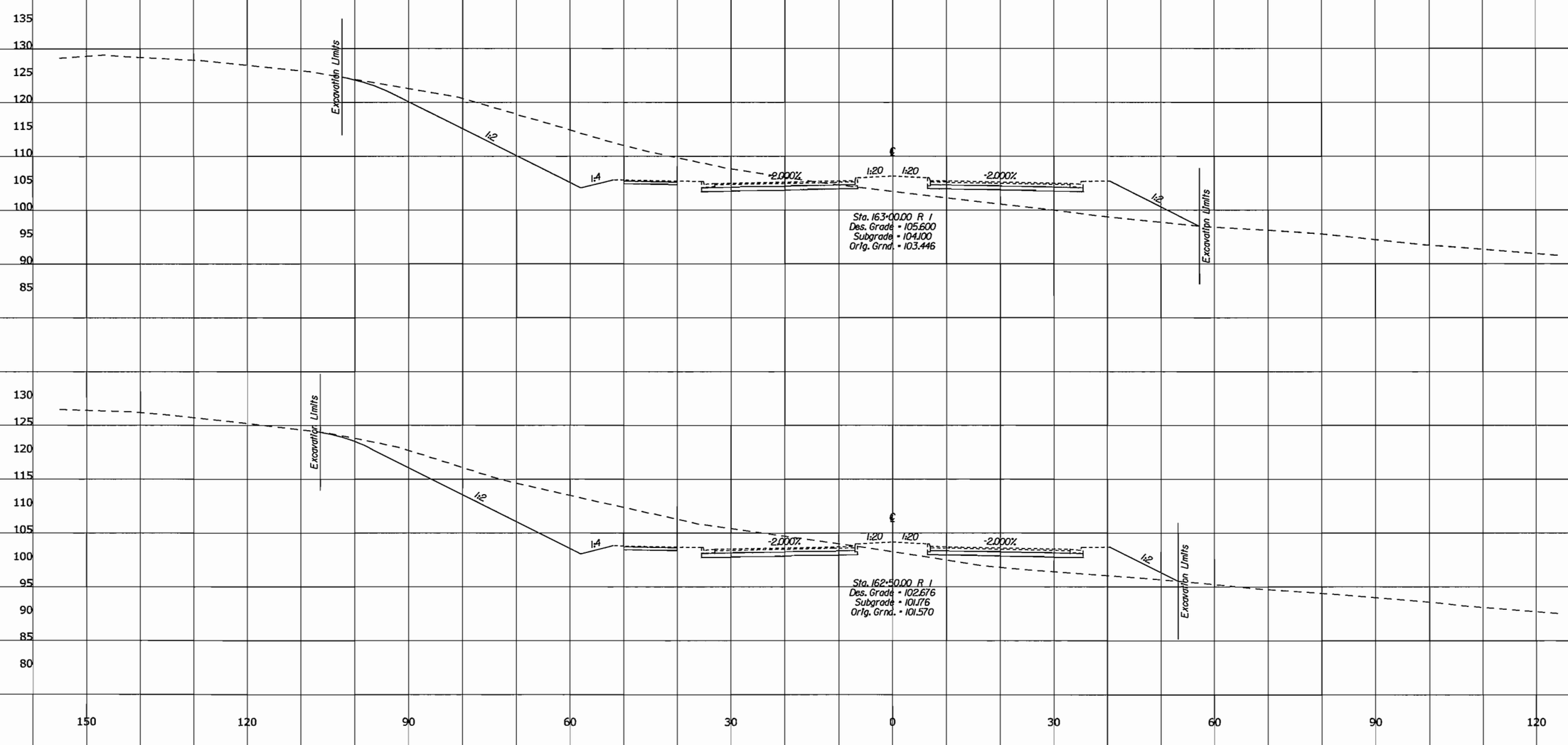

U.S. DEPARTMENT OF TRANSPORTATION
FEDERAL HIGHWAY ADMINISTRATION
EASTERN FEDERAL LANDS HIGHWAY DIVISION
STERLING, VIRGINIA

FORT BELVOIR - MULLIGAN ROAD

CROSS SECTIONS

MULLIGAN ROAD

162+50.00 TO 163+00.00

6/10/2008 10:16:50 AM:\PWworking\PITT\dms60567\T-RTC_Dxs_shdgn

REG	STATE	PROJECT	SHEET NO.
-	VA	VA-A-AD-48(1)	T15

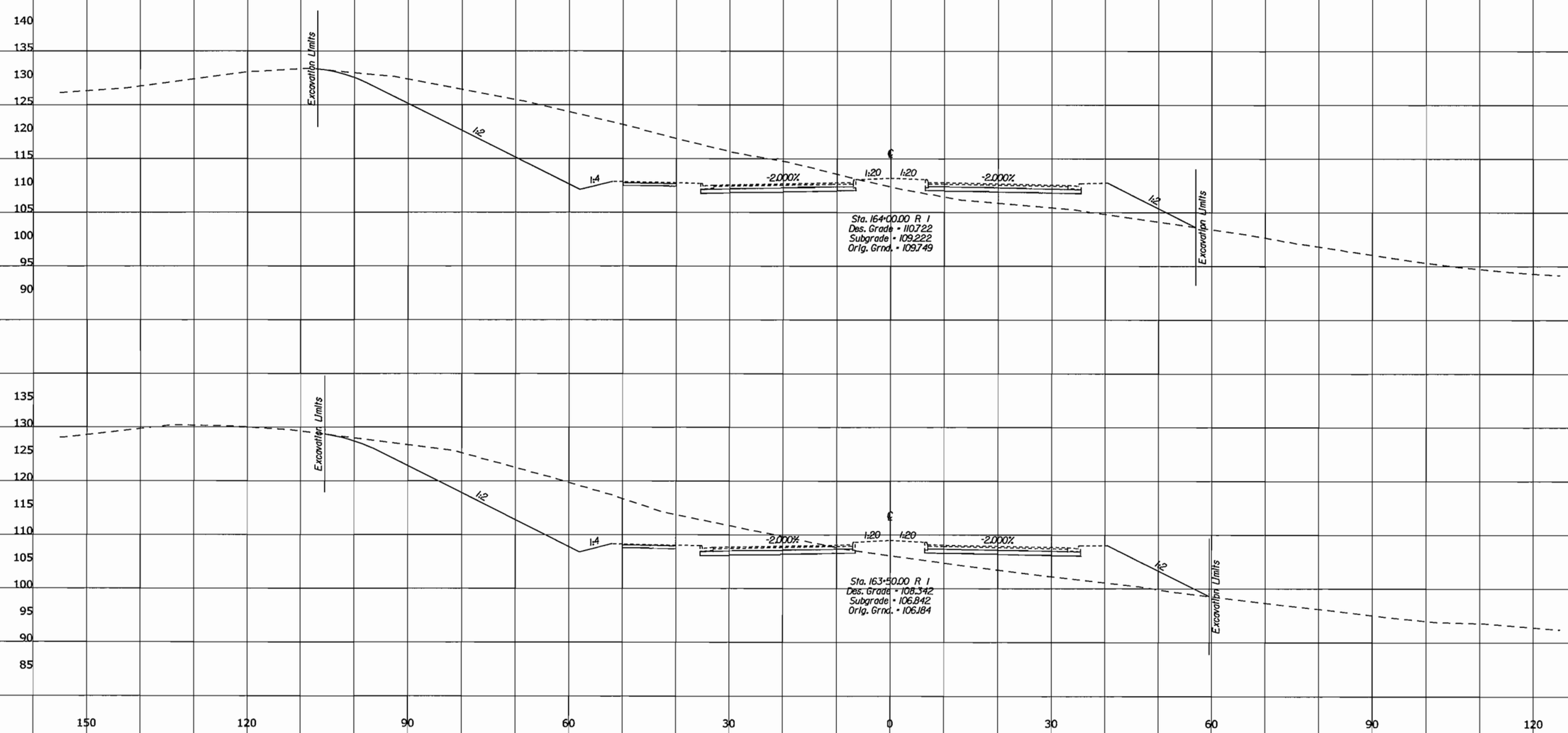

U.S. DEPARTMENT OF TRANSPORTATION
FEDERAL HIGHWAY ADMINISTRATION
EASTERN FEDERAL LANDS HIGHWAY DIVISION
STERLING, VIRGINIA

FORT BELVOIR - MULLIGAN ROAD

CROSS SECTIONS

MULLIGAN ROAD

163+50.00 TO 164+00.00

10:16:50 AM C:\PWworking\PITT\dms60567\T-RTC_Dxs_sh.dgn

6/10/2008

REG	STATE	PROJECT	SHEET NO.
-	VA	VA-A-AD-48(1)	T16

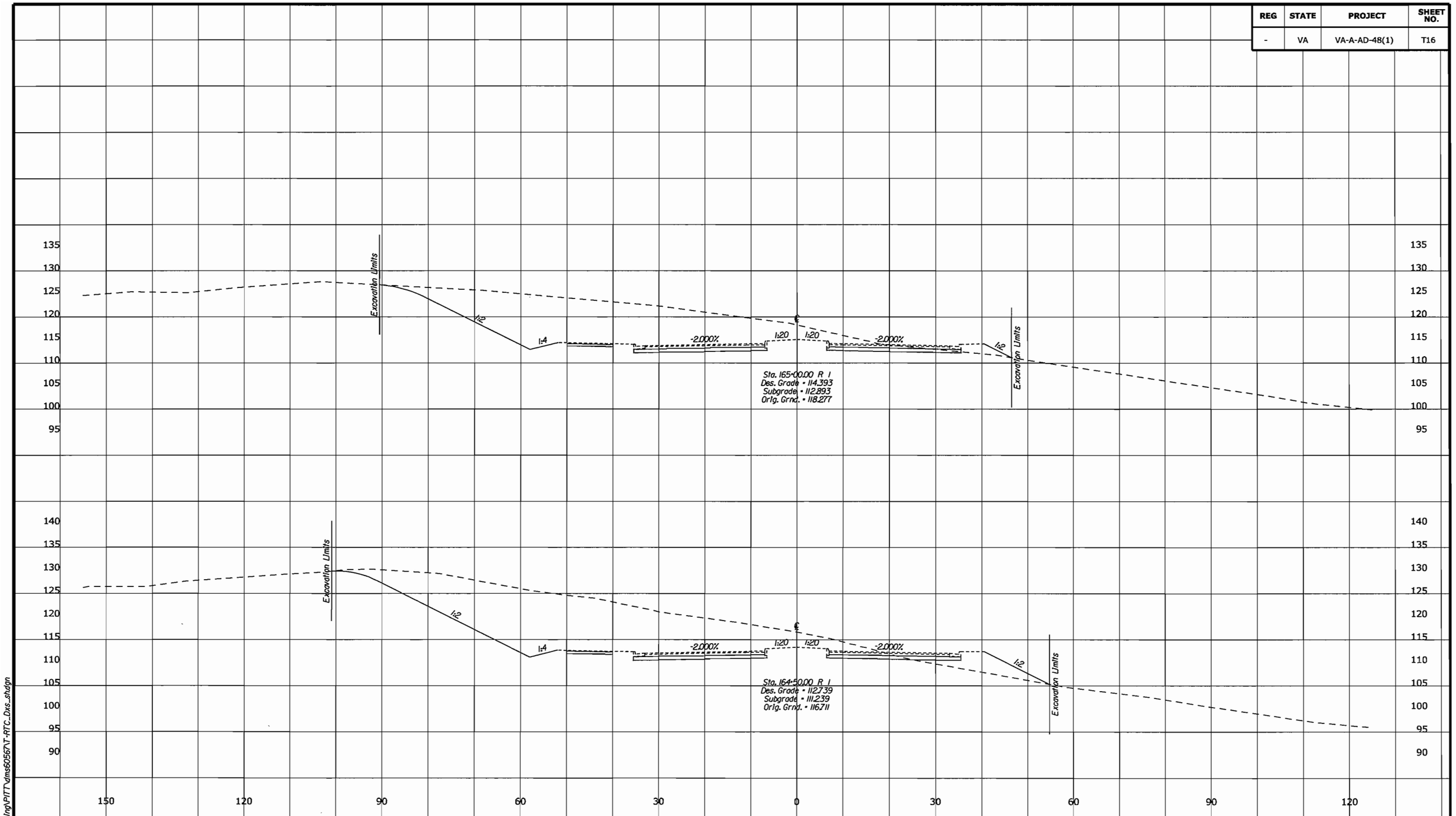

U.S. DEPARTMENT OF TRANSPORTATION
FEDERAL HIGHWAY ADMINISTRATION
EASTERN FEDERAL LANDS HIGHWAY DIVISION
STERLING, VIRGINIA

FORT BELVOIR - MULLIGAN ROAD

CROSS SECTIONS

MULLIGAN ROAD

164+50.00 TO 165+00.00

6/10/2008 10:16:50 AM:\PWworking\PITT\dms6056\T-RTC_Dxs_shdgn

REG	STATE	PROJECT	SHEET NO.
-	VA	VA-A-AD-48(1)	T17

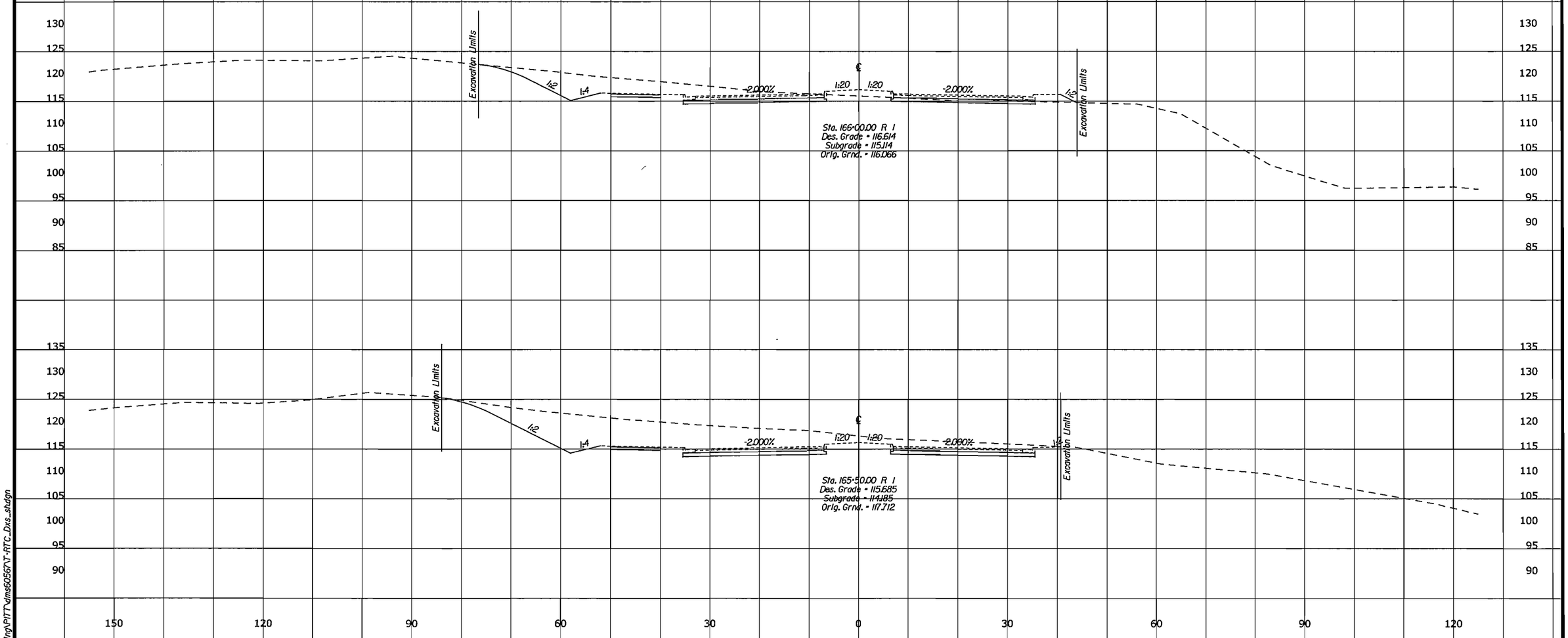

U.S. DEPARTMENT OF TRANSPORTATION
FEDERAL HIGHWAY ADMINISTRATION
EASTERN FEDERAL LANDS HIGHWAY DIVISION
STERLING, VIRGINIA

FORT BELVOIR - MULLIGAN ROAD

CROSS SECTIONS

MULLIGAN ROAD

165+50.00 TO 166+00.00

6/10/2008 10:16:50 AM:\PWworking\PITT\dms60567\T-RTC_Dxs_shdgn

REG	STATE	PROJECT	SHEET NO.
-	VA	VA-A-AD-48(1)	T18

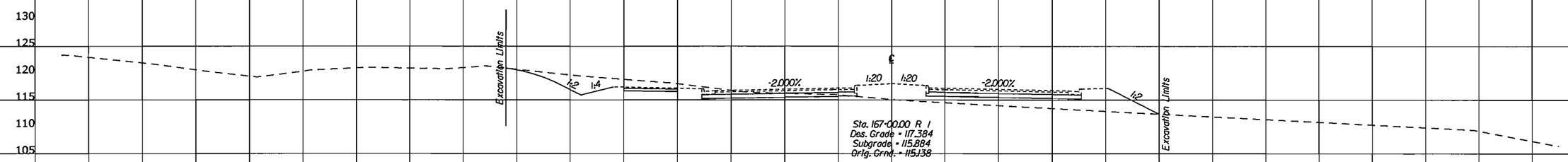

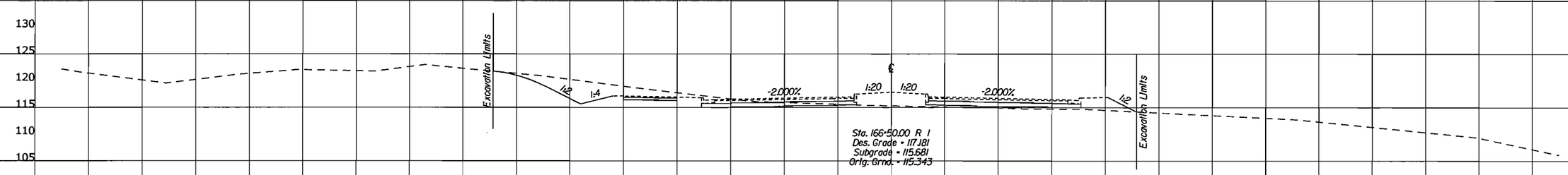

150 120 90 60 30 0 30 60 90 120

U.S. DEPARTMENT OF TRANSPORTATION
FEDERAL HIGHWAY ADMINISTRATION
EASTERN FEDERAL LANDS HIGHWAY DIVISION
STERLING, VIRGINIA

FORT BELVOIR - MULLIGAN ROAD

CROSS SECTIONS

MULLIGAN ROAD

166+50.00 TO 167+00.00

6/10/2008 10:16:50 AM C:\PWworking\PITT\dms60567\T-RTC_Dxs.shdgn

REG	STATE	PROJECT	SHEET NO.
-	VA	VA-A-AD-48(1)	T19

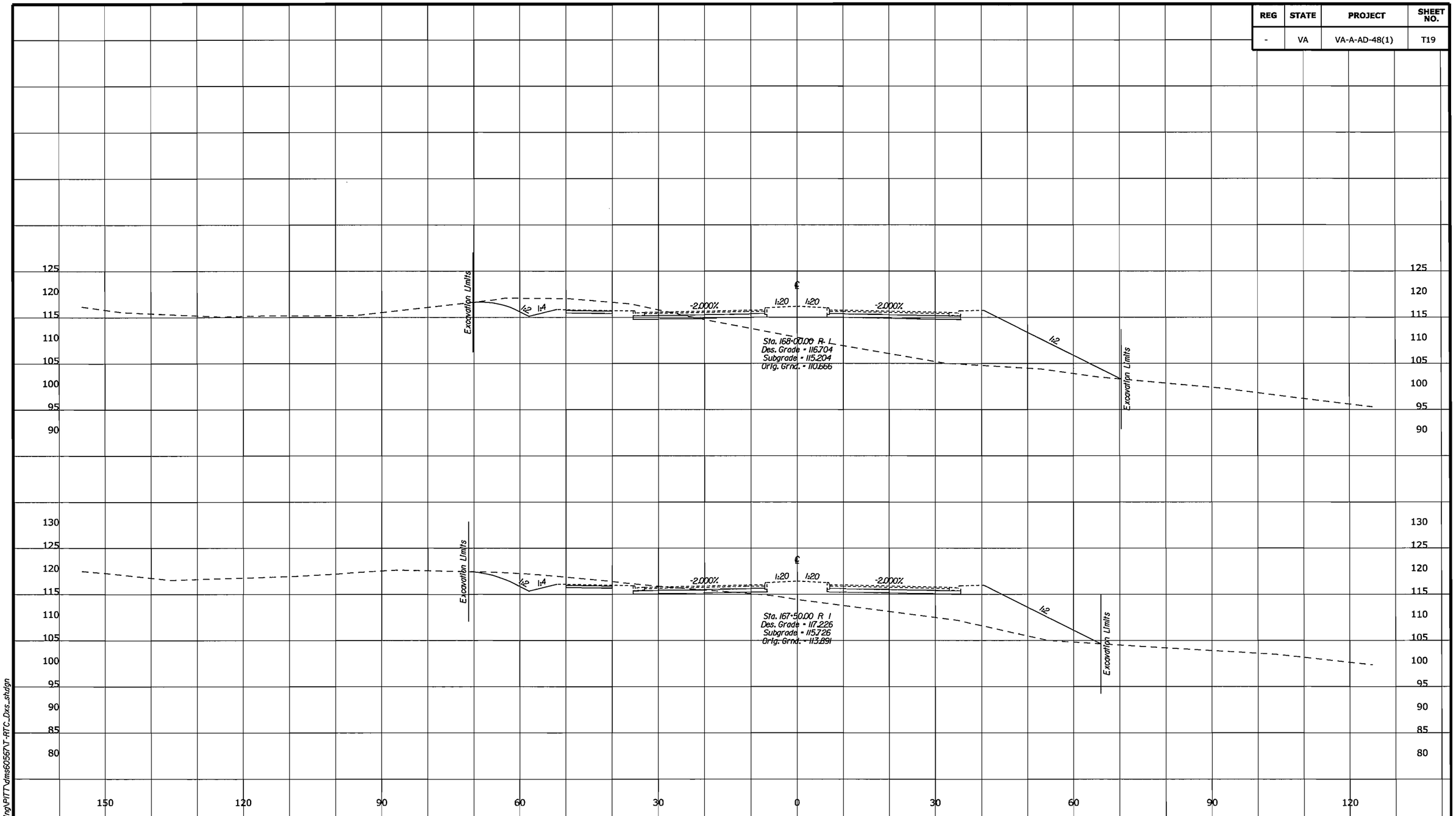

U.S. DEPARTMENT OF TRANSPORTATION
FEDERAL HIGHWAY ADMINISTRATION
EASTERN FEDERAL LANDS HIGHWAY DIVISION
STERLING, VIRGINIA

FORT BELVOIR - MULLIGAN ROAD

CROSS SECTIONS

MULLIGAN ROAD

167+50.00 TO 168+00.00

6/10/2008 10:46:51 AM C:\PWworking\PITT\dms60567\T-RTC_Dxs_shdgn

REG	STATE	PROJECT	SHEET NO.
-	VA	VA-A-AD-48(1)	T20

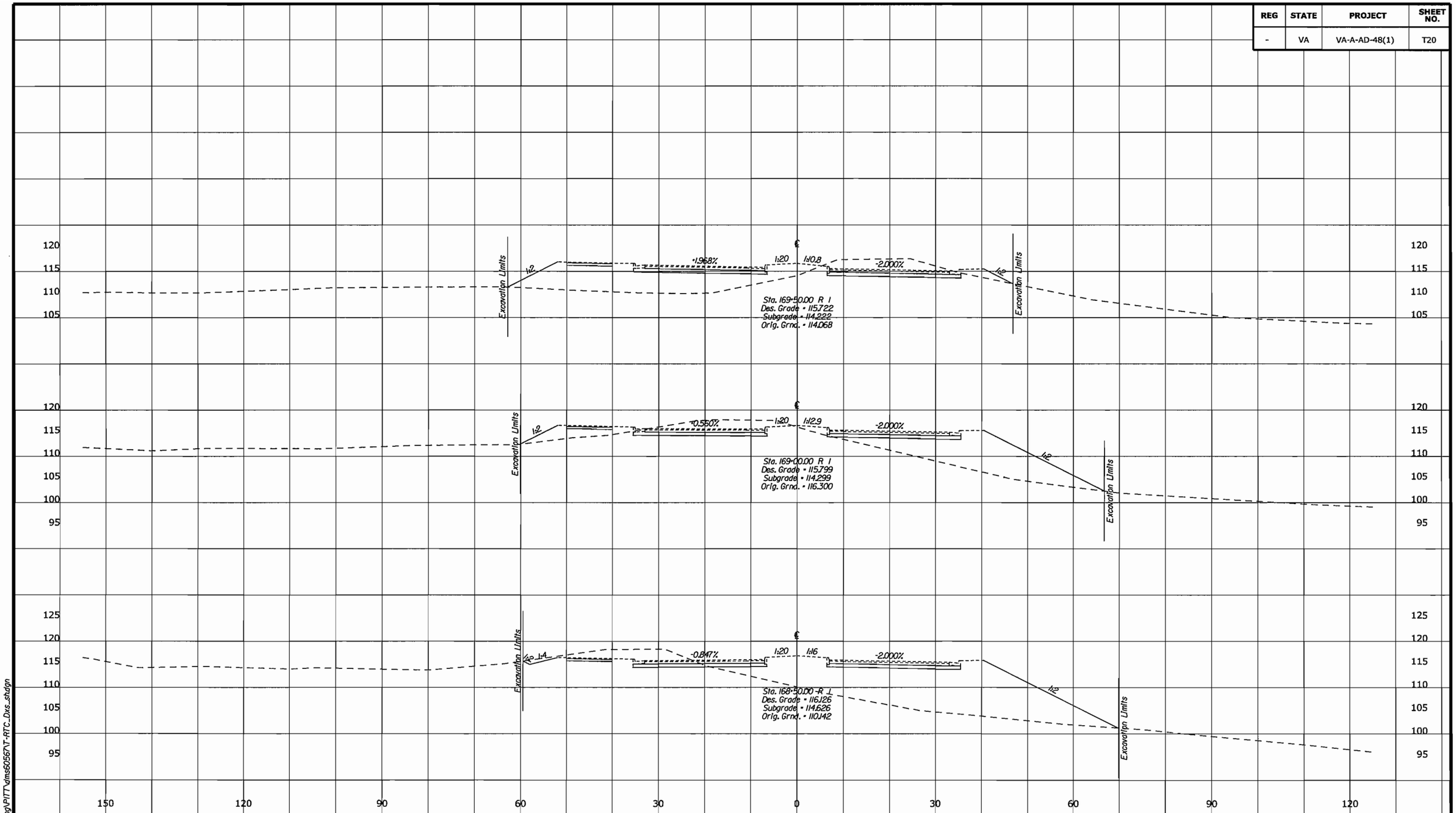

U.S. DEPARTMENT OF TRANSPORTATION
FEDERAL HIGHWAY ADMINISTRATION
EASTERN FEDERAL LANDS HIGHWAY DIVISION
STERLING, VIRGINIA

FORT BELVOIR - MULLIGAN ROAD

CROSS SECTIONS

MULLIGAN ROAD

168+50.00 TO 169+50.00

6/10/2008 10:16:51 AM C:\PWworking\PITT\dms60567\T-RTC_Dxs_shdgn

REG	STATE	PROJECT	SHEET NO.
-	VA	VA-A-AD-48(1)	T21

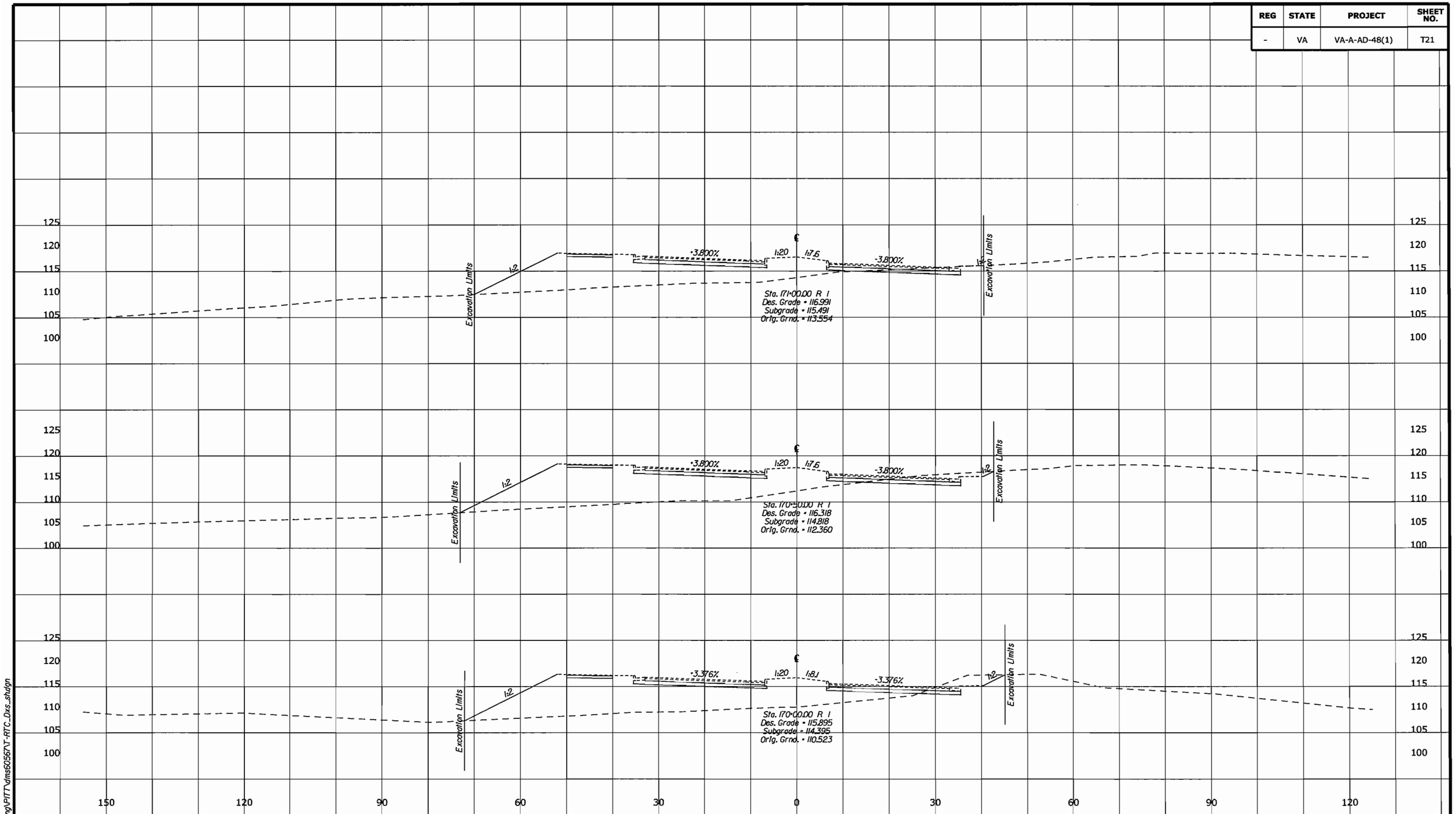

U.S. DEPARTMENT OF TRANSPORTATION
FEDERAL HIGHWAY ADMINISTRATION
EASTERN FEDERAL LANDS HIGHWAY DIVISION
STERLING, VIRGINIA

FORT BELVOIR - MULLIGAN ROAD

CROSS SECTIONS

MULLIGAN ROAD

170+00.00 TO 171+00.00

6/10/2008 10:46:51 AM C:\PWworking\PITT\dms60567\T-RTC_Dxs_shdgn

REG	STATE	PROJECT	SHEET NO.
-	VA	VA-A-AD-48(1)	T22

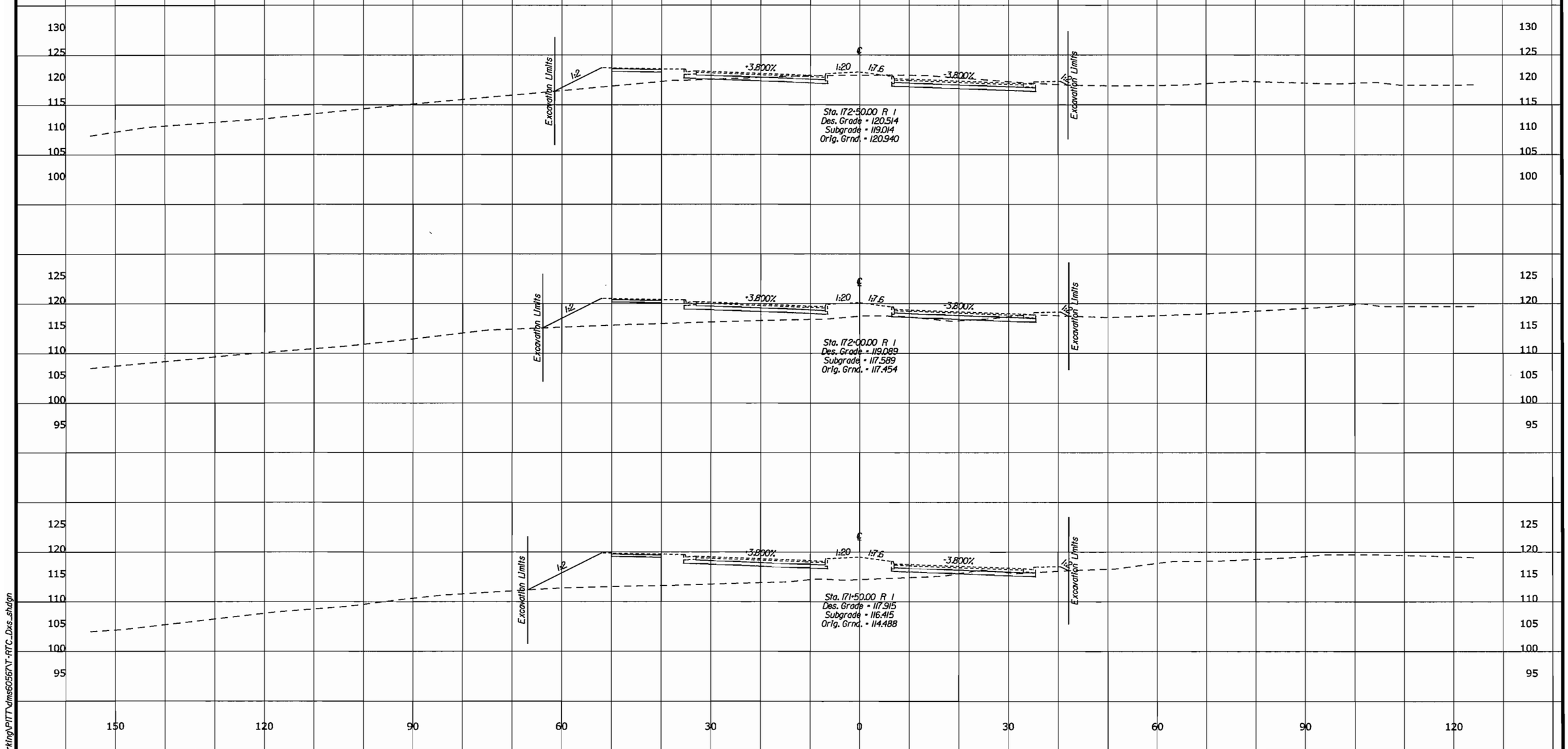

U.S. DEPARTMENT OF TRANSPORTATION
FEDERAL HIGHWAY ADMINISTRATION
EASTERN FEDERAL LANDS HIGHWAY DIVISION
STERLING, VIRGINIA

FORT BELVOIR - MULLIGAN ROAD

CROSS SECTIONS

MULLIGAN ROAD

171+50.00 TO 172+50.00

6/10/2008 10:16:51 AM C:\PWworking\PITT\dms6056\T-RTC_Dxs_shdgn

REG	STATE	PROJECT	SHEET NO.
-	VA	VA-A-AD-48(1)	T23

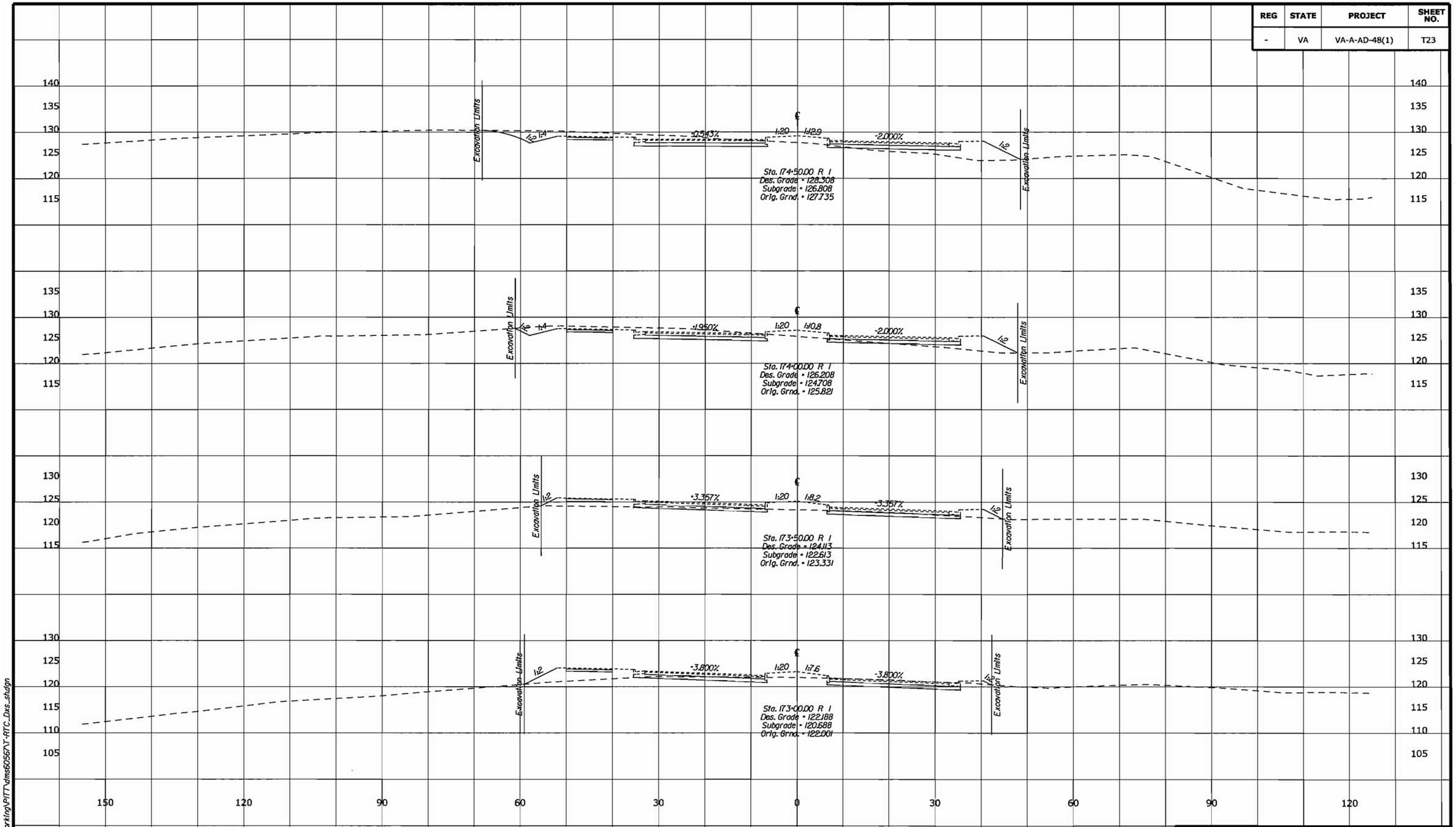

U.S. DEPARTMENT OF TRANSPORTATION
FEDERAL HIGHWAY ADMINISTRATION
EASTERN FEDERAL LANDS HIGHWAY DIVISION
STERLING, VIRGINIA

FORT BELVOIR - MULLIGAN ROAD

CROSS SECTIONS

MULLIGAN ROAD

173+00.00 TO 174+50.00

6/10/2008 10:16:51 AM C:\PWworking\PITT\dms50567\T-RTC_Dxs_sht.dgn

REG	STATE	PROJECT	SHEET NO.
-	VA	VA-A-AD-48(1)	T24

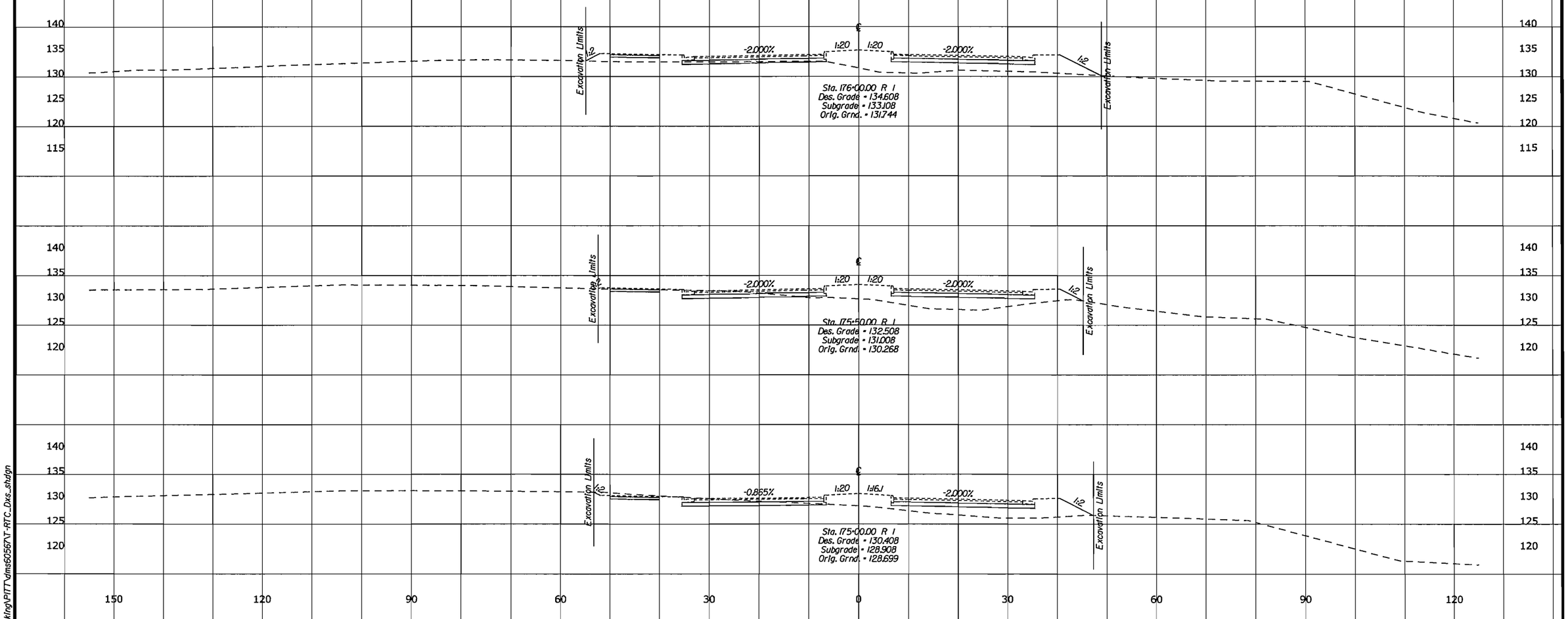

U.S. DEPARTMENT OF TRANSPORTATION
FEDERAL HIGHWAY ADMINISTRATION
EASTERN FEDERAL LANDS HIGHWAY DIVISION
STERLING, VIRGINIA

FORT BELVOIR - MULLIGAN ROAD

CROSS SECTIONS

MULLIGAN ROAD

175+00.00 TO 176+00.00

6/10/2008 10:16:51 AM C:\PWworking\PITT\dms50567\T-RTC_Dxs.shdgn

REG	STATE	PROJECT	SHEET NO.
-	VA	VA-A-AD-48(1)	T25

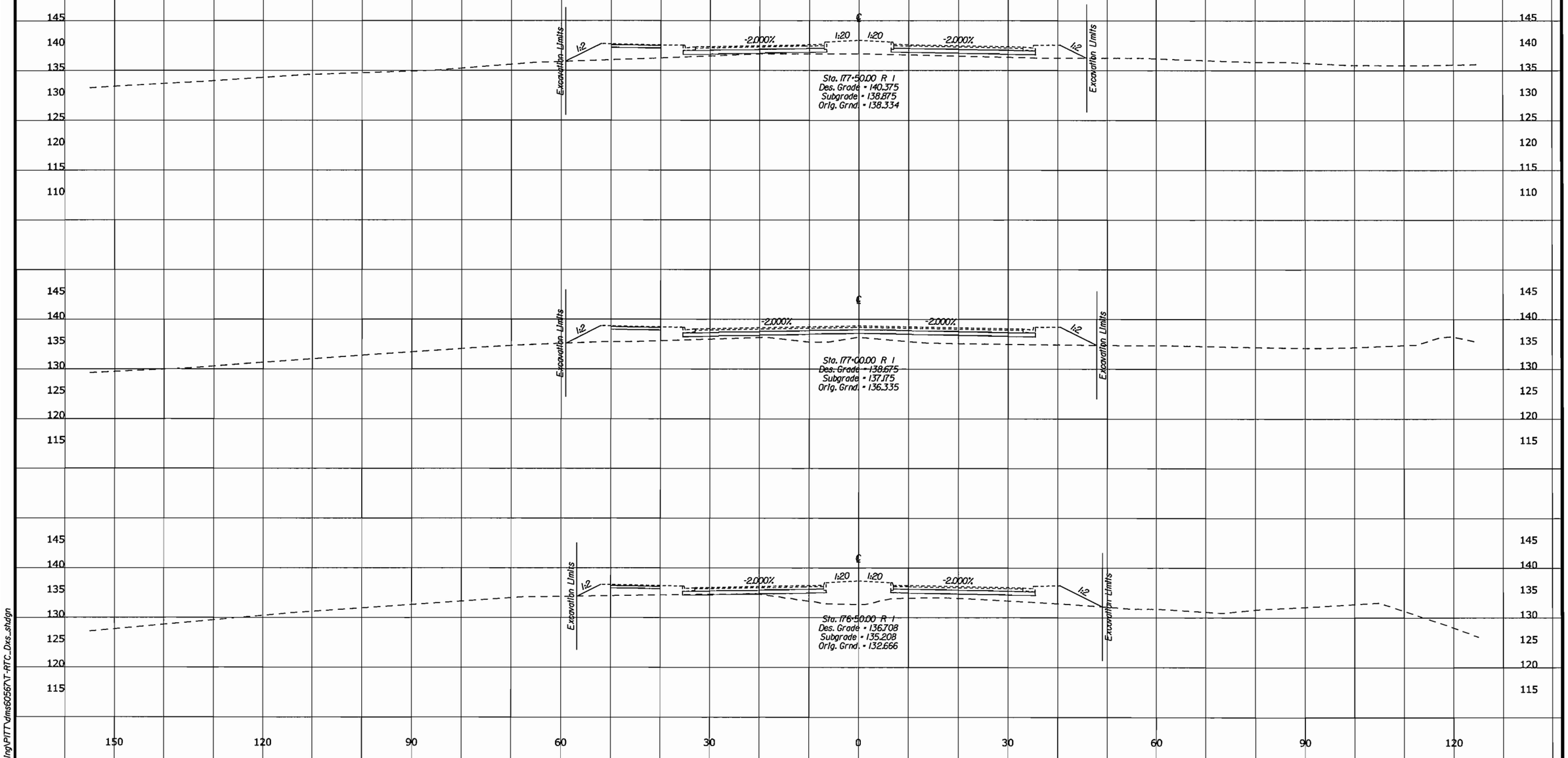

U.S. DEPARTMENT OF TRANSPORTATION
FEDERAL HIGHWAY ADMINISTRATION
EASTERN FEDERAL LANDS HIGHWAY DIVISION
STERLING, VIRGINIA

FORT BELVOIR - MULLIGAN ROAD

CROSS SECTIONS

MULLIGAN ROAD

176+50.00 TO 177+50.00

6/10/2008 10:16:51 AM C:\PWworking\PITT\dms60567\T-RTC_Dxs_shdgn

REG	STATE	PROJECT	SHEET NO.
-	VA	VA-A-AD-48(1)	T26

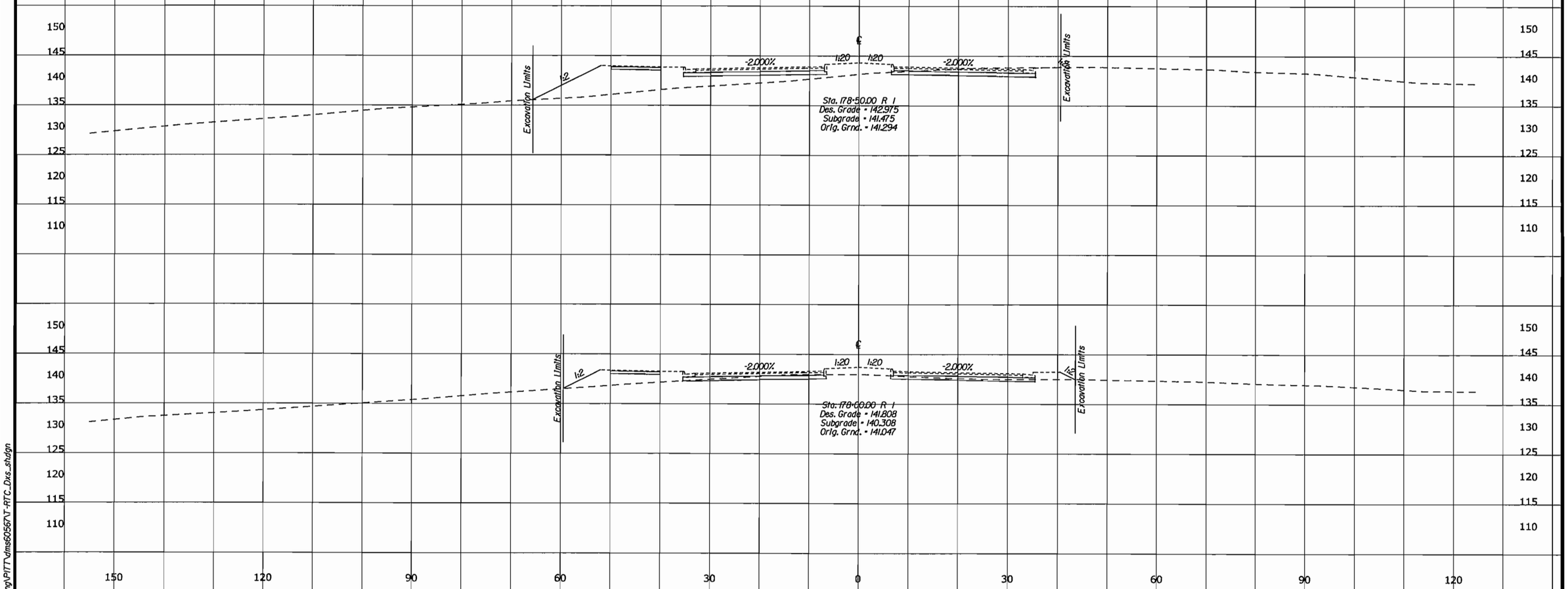

U.S. DEPARTMENT OF TRANSPORTATION
FEDERAL HIGHWAY ADMINISTRATION
EASTERN FEDERAL LANDS HIGHWAY DIVISION
STERLING, VIRGINIA

FORT BELVOIR - MULLIGAN ROAD

CROSS SECTIONS

MULLIGAN ROAD

178+00.00 TO 178+50.00

6/10/2008 10:16:52 AM:\PWworking\PITT\dms60567\T-RTC_Dxs.shdgn

REG	STATE	PROJECT	SHEET NO.
-	VA	VA-A-AD-48(1)	T27

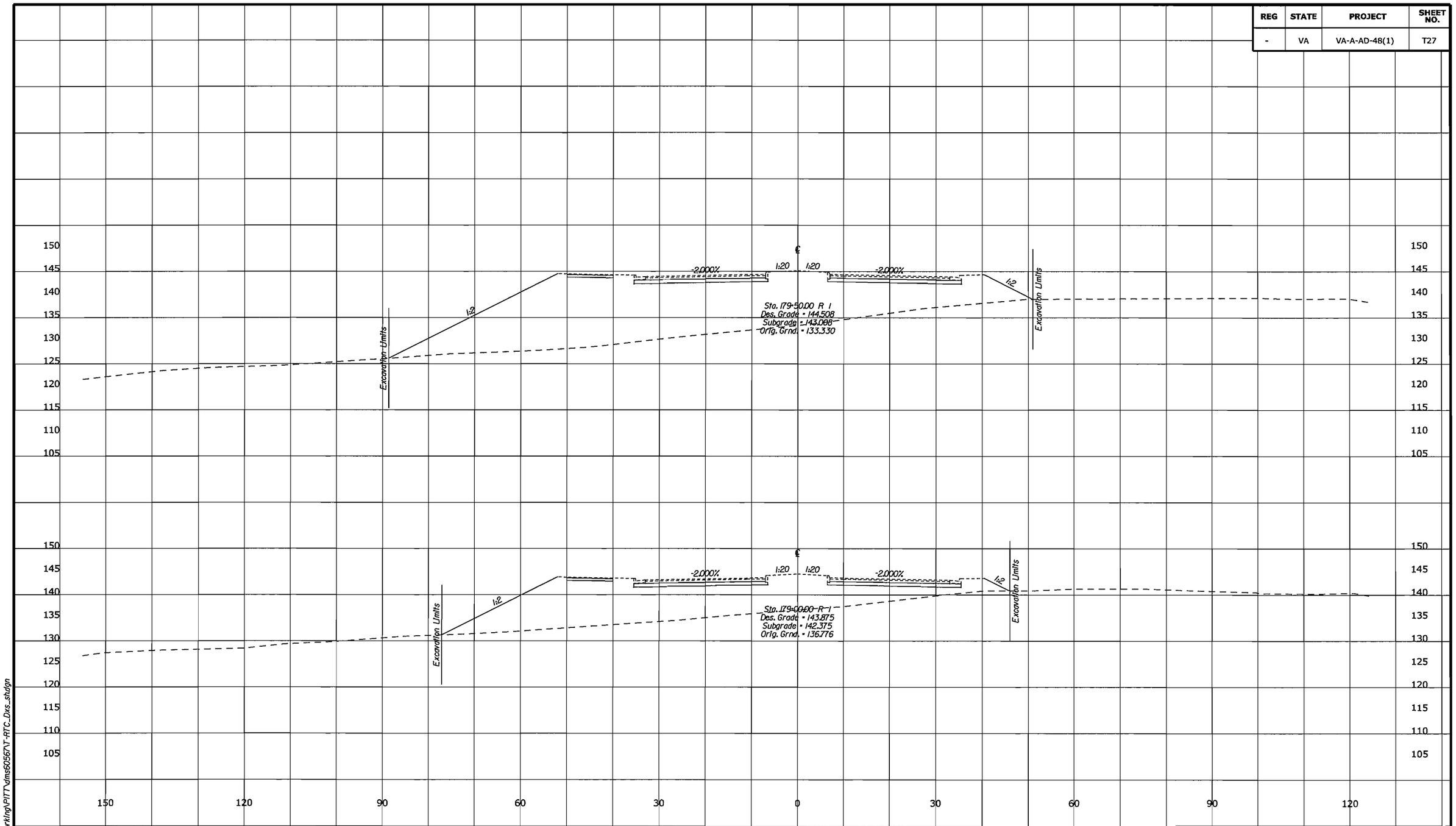

U.S. DEPARTMENT OF TRANSPORTATION
FEDERAL HIGHWAY ADMINISTRATION
EASTERN FEDERAL LANDS HIGHWAY DIVISION
STERLING, VIRGINIA

FORT BELVOIR - MULLIGAN ROAD

CROSS SECTIONS

MULLIGAN ROAD

179+00.00 TO 179+50.00

6/10/2008 10:16:52 A:\PWworking\PITT\dms60567\T-RTC_Dxs_shdgn

REG	STATE	PROJECT	SHEET NO.
-	VA	VA-A-AD-48(1)	T28

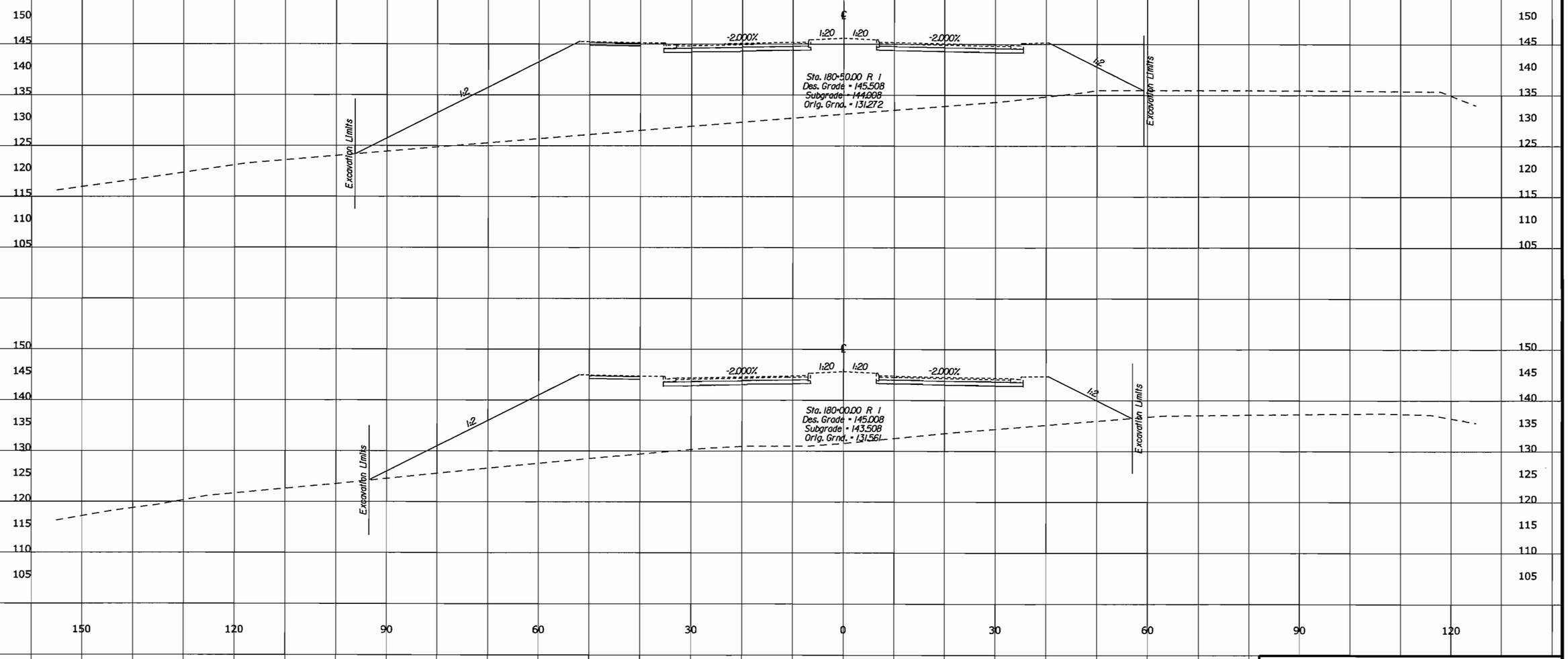

U.S. DEPARTMENT OF TRANSPORTATION
FEDERAL HIGHWAY ADMINISTRATION
EASTERN FEDERAL LANDS HIGHWAY DIVISION
STERLING, VIRGINIA

FORT BELVOIR - MULLIGAN ROAD

CROSS SECTIONS

MULLIGAN ROAD

180+00.00 TO 180+50.00

6/10/2008 10:6:52 AM:\PWworking\PITT\dms6056\T-RTC_Dxs_shdgn

REG	STATE	PROJECT	SHEET NO.
-	VA	VA-A-AD-48(1)	T29

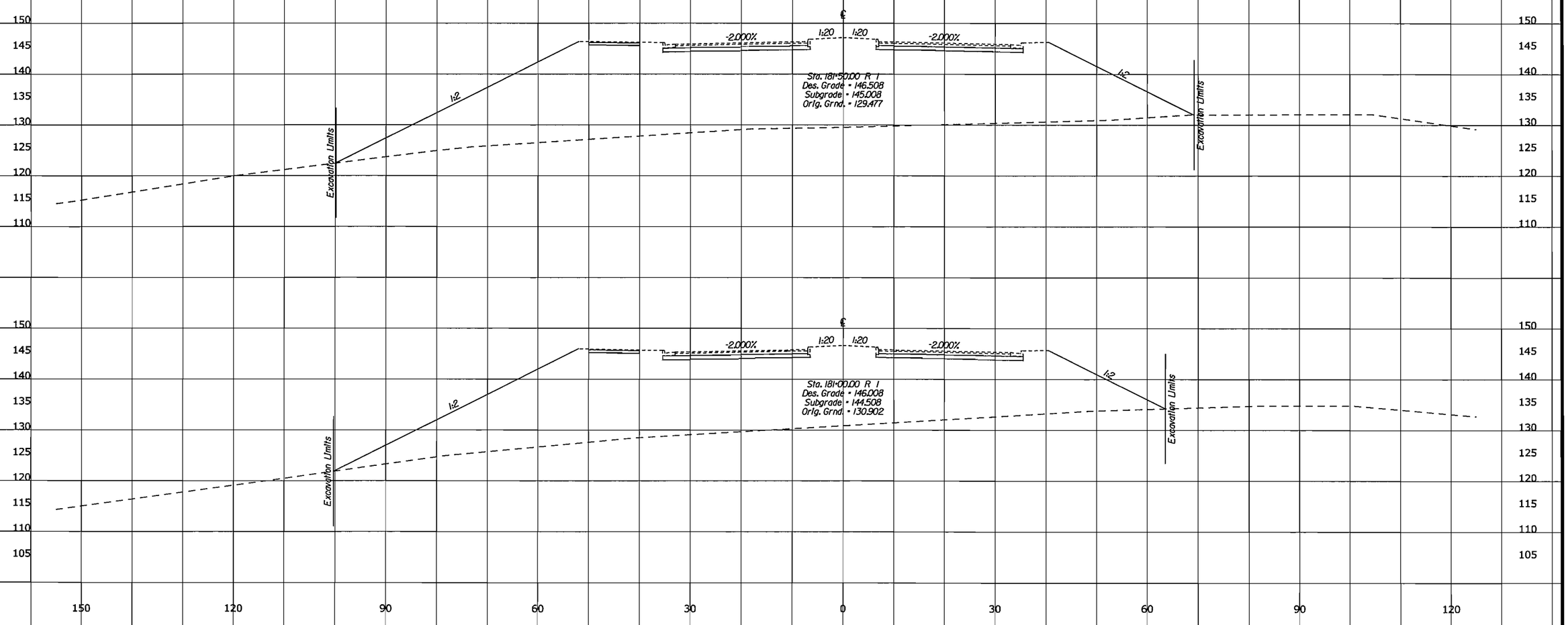

U.S. DEPARTMENT OF TRANSPORTATION
FEDERAL HIGHWAY ADMINISTRATION
EASTERN FEDERAL LANDS HIGHWAY DIVISION
STERLING, VIRGINIA

FORT BELVOIR - MULLIGAN ROAD

CROSS SECTIONS

MULLIGAN ROAD

181+00.00 TO 181+50.00

6/10/2008 10:16:52 AM C:\PWworking\PITT\dms60567\T-RTC_Dxs_shdgn

REG	STATE	PROJECT	SHEET NO.
-	VA	VA-A-AD-48(1)	T30

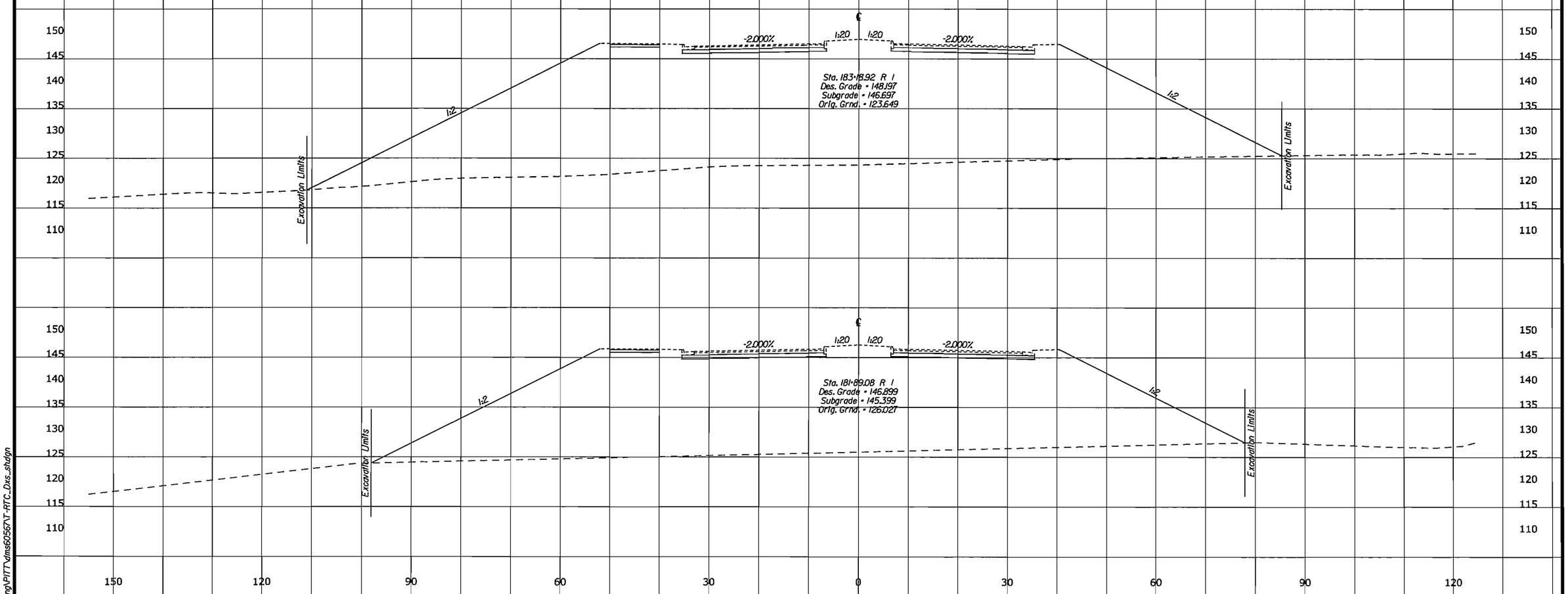

U.S. DEPARTMENT OF TRANSPORTATION
FEDERAL HIGHWAY ADMINISTRATION
EASTERN FEDERAL LANDS HIGHWAY DIVISION
STERLING, VIRGINIA

FORT BELVOIR - MULLIGAN ROAD

CROSS SECTIONS

MULLIGAN ROAD

181+89.08 TO 183+18.92

6/10/2008 10:16:52 AM:\PWworking\PITT\dms60567\T-RTC_Dxs_shdgn

REG	STATE	PROJECT	SHEET NO.
-	VA	VA-A-AD-48(1)	T31

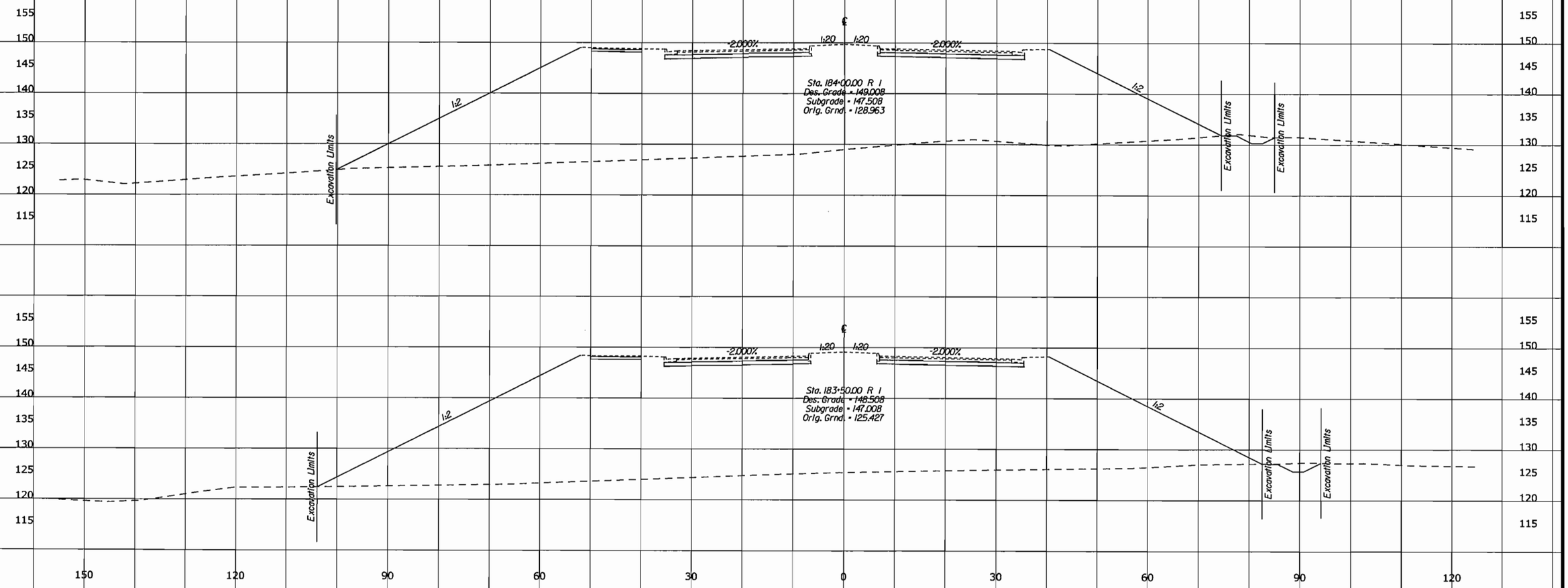

U.S. DEPARTMENT OF TRANSPORTATION
FEDERAL HIGHWAY ADMINISTRATION
EASTERN FEDERAL LANDS HIGHWAY DIVISION
STERLING, VIRGINIA

FORT BELVOIR - MULLIGAN ROAD

CROSS SECTIONS

MULLIGAN ROAD

183+50.00 TO 184+00.00

6/10/2008 10:16:52 AM:\PWworking\PITT\dms60567\T-RTC_Dxs_sh.dgn

REG	STATE	PROJECT	SHEET NO.
-	VA	VA-A-AD-48(1)	T32

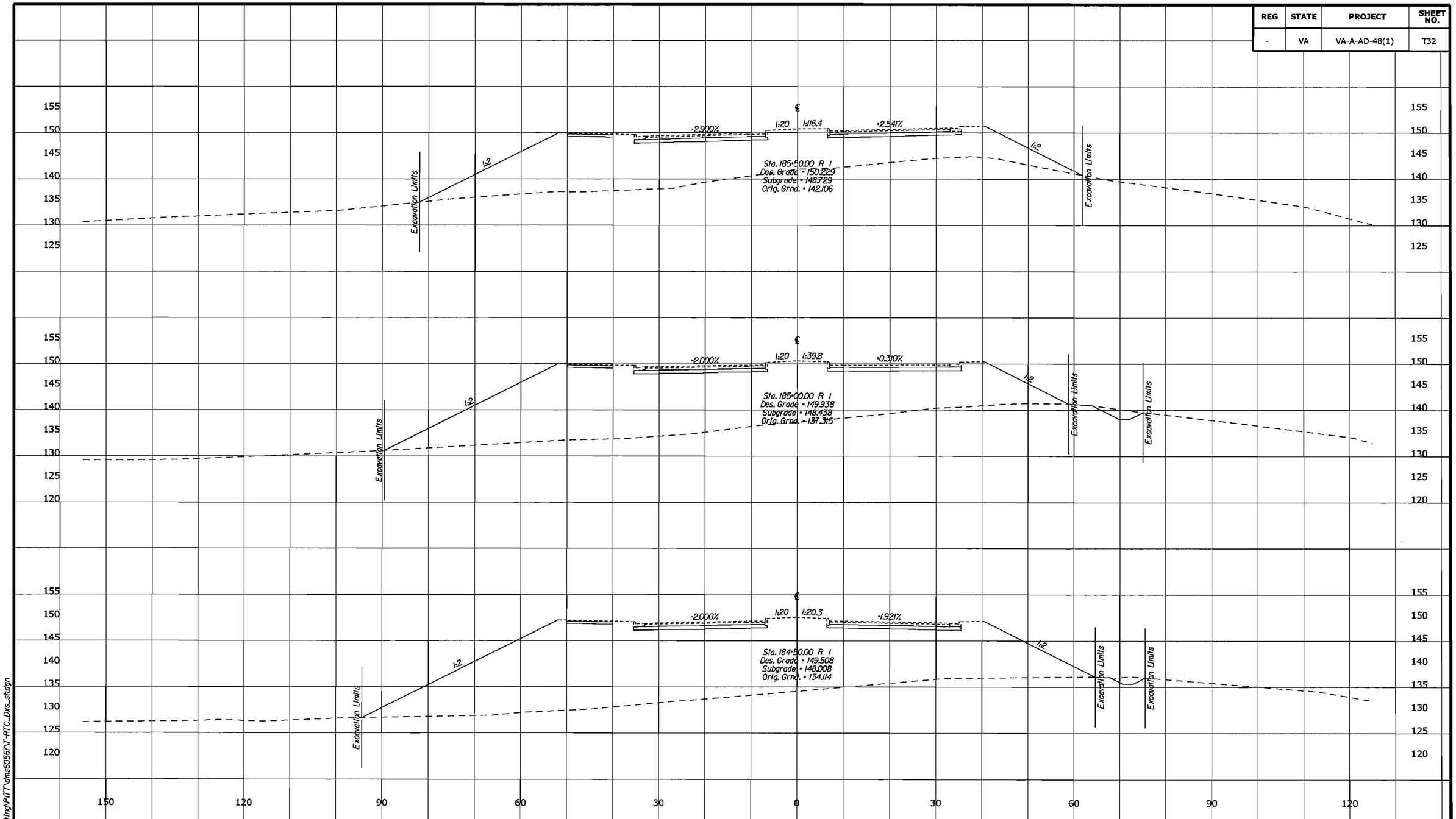

U.S. DEPARTMENT OF TRANSPORTATION
FEDERAL HIGHWAY ADMINISTRATION
EASTERN FEDERAL LANDS HIGHWAY DIVISION
STERLING, VIRGINIA

FORT BELVOIR - MULLIGAN ROAD

CROSS SECTIONS

MULLIGAN ROAD

184+50.00 TO 185+50.00

6/10/2008 10:46:52 A:\PWworking\PITT\dms50556\T-RTC_Dxs_stdgn

REG	STATE	PROJECT	SHEET NO.
-	VA	VA-A-AD-48(1)	T33

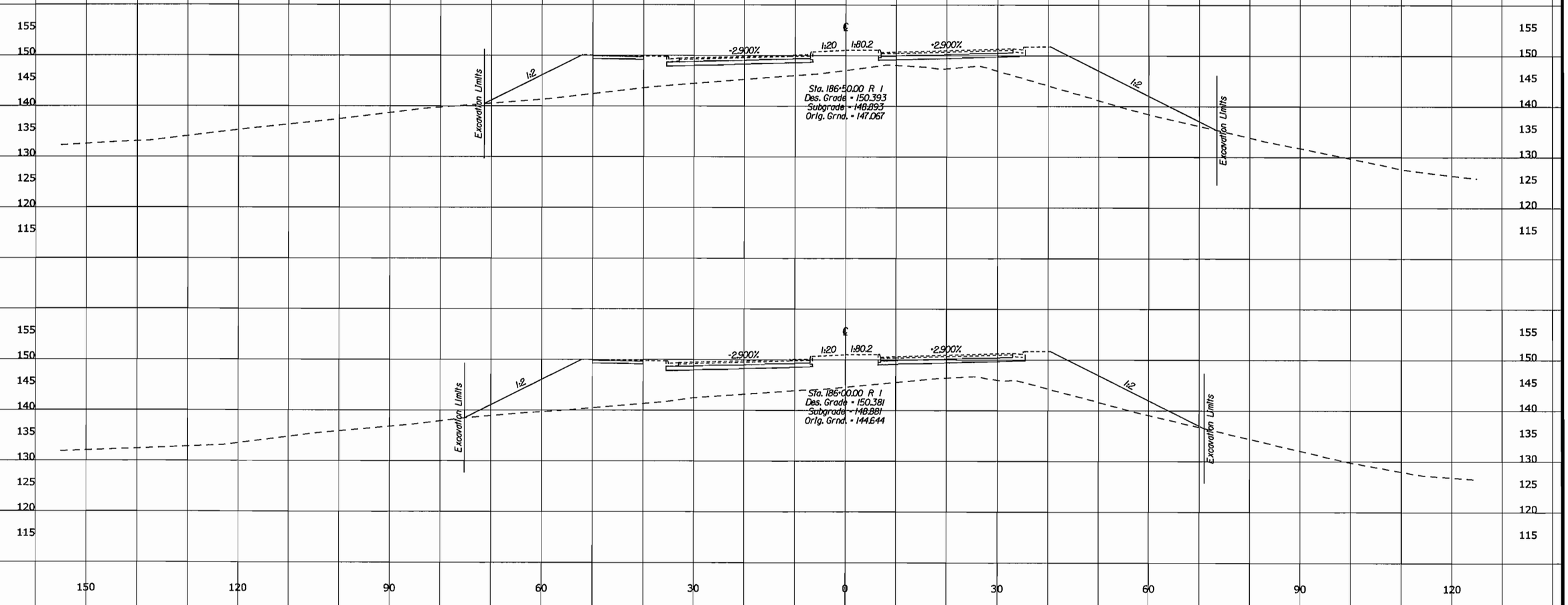

U.S. DEPARTMENT OF TRANSPORTATION
FEDERAL HIGHWAY ADMINISTRATION
EASTERN FEDERAL LANDS HIGHWAY DIVISION
STERLING, VIRGINIA

FORT BELVOIR - MULLIGAN ROAD

CROSS SECTIONS

MULLIGAN ROAD

186+00.00 TO 186+50.00

6/10/2008 10:46:53 AM:\PWworking\PITT\dms6056\T-RTC_Dxs_shdgn

REG	STATE	PROJECT	SHEET NO.
-	VA	VA-A-AD-48(1)	T34

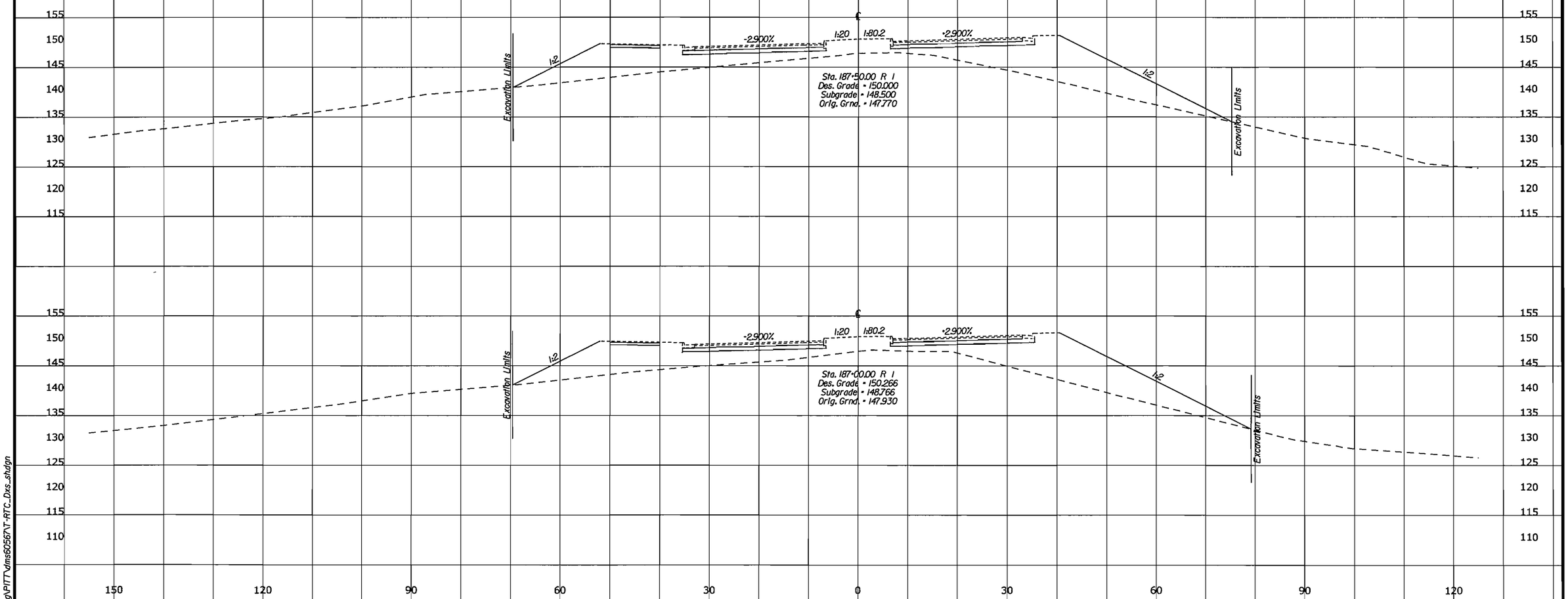

U.S. DEPARTMENT OF TRANSPORTATION
FEDERAL HIGHWAY ADMINISTRATION
EASTERN FEDERAL LANDS HIGHWAY DIVISION
STERLING, VIRGINIA

FORT BELVOIR - MULLIGAN ROAD

CROSS SECTIONS

MULLIGAN ROAD

187+00.00 TO 187+50.00

6/10/2008 10:16:53 AM:\PWworking\PITT\dms60567\T-RTC_Dxs_shdgn

REG	STATE	PROJECT	SHEET NO.
-	VA	VA-A-AD-48(1)	T35

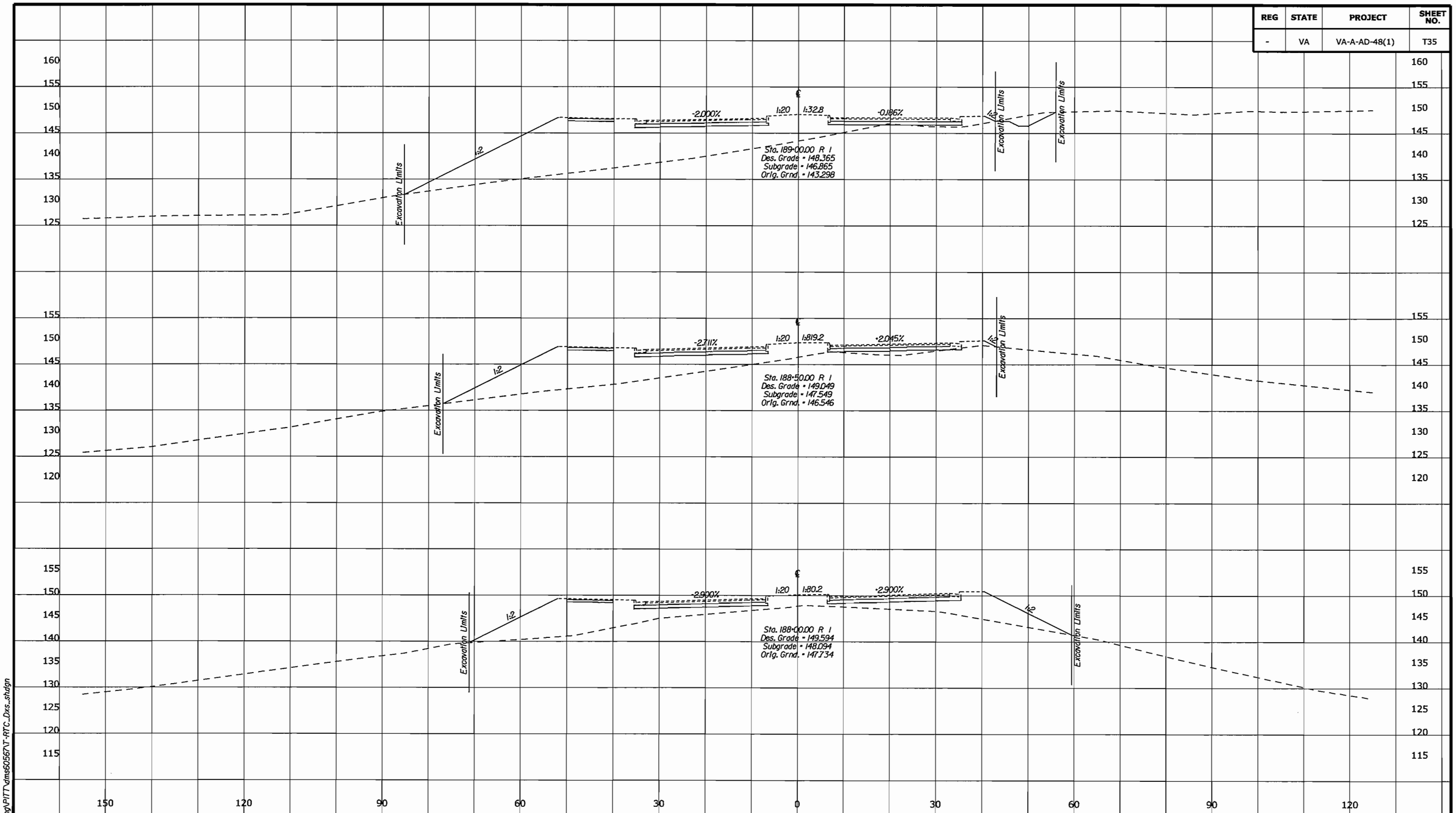

U.S. DEPARTMENT OF TRANSPORTATION
FEDERAL HIGHWAY ADMINISTRATION
EASTERN FEDERAL LANDS HIGHWAY DIVISION
STERLING, VIRGINIA

FORT BELVOIR - MULLIGAN ROAD

CROSS SECTIONS

MULLIGAN ROAD

188+00.00 TO 189+00.00

6/10/2008 10:16:53 AM:\PWworking\PITT\dms6056\T-RTC_Dxs_shdgn

REG	STATE	PROJECT	SHEET NO.
-	VA	VA-A-AD-48(1)	T36

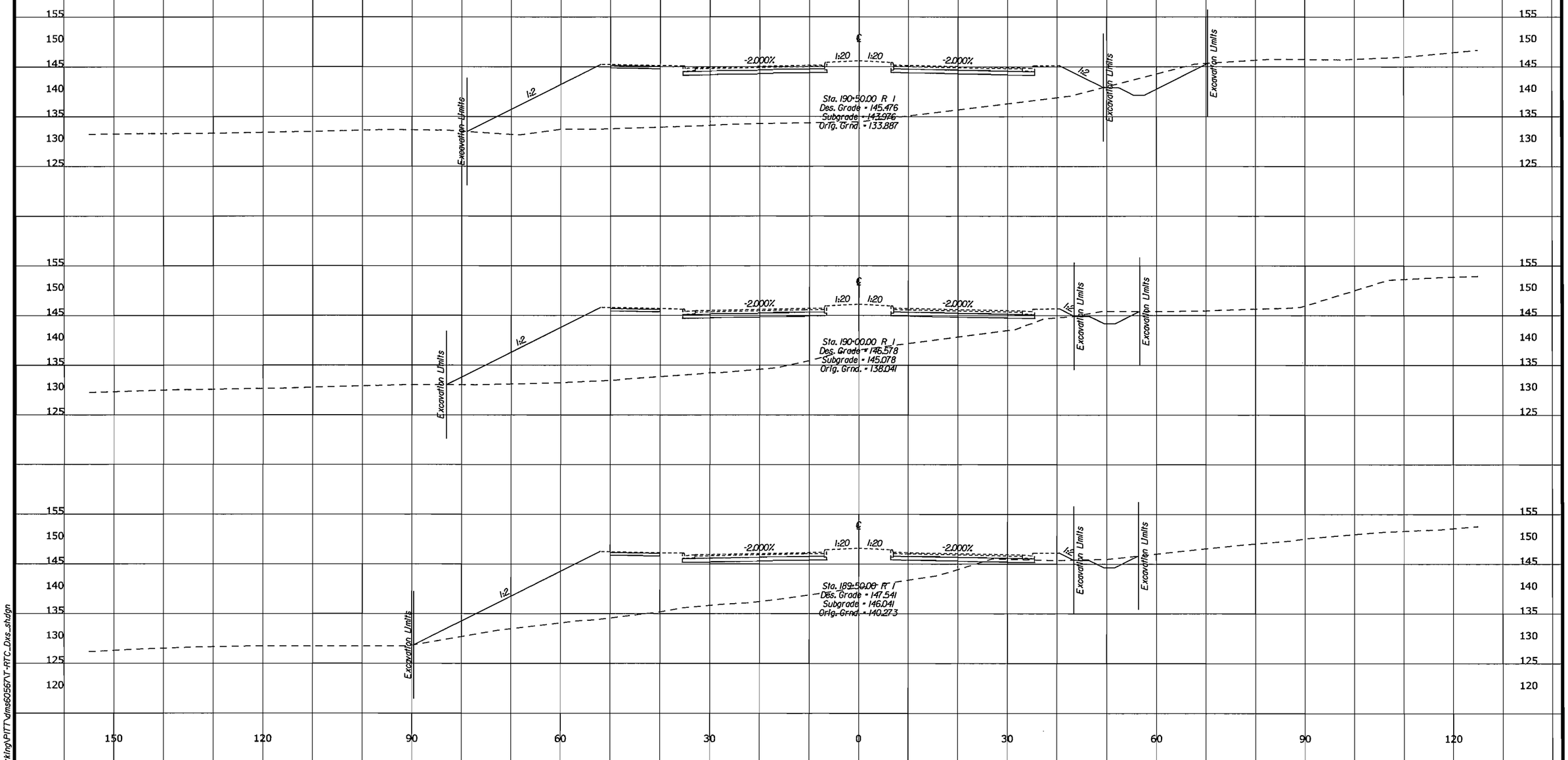

U.S. DEPARTMENT OF TRANSPORTATION
FEDERAL HIGHWAY ADMINISTRATION
EASTERN FEDERAL LANDS HIGHWAY DIVISION
STERLING, VIRGINIA

FORT BELVOIR - MULLIGAN ROAD

CROSS SECTIONS

MULLIGAN ROAD

189+50.00 TO 190+50.00

6/10/2008 10:16:53 AM \\PWworking\PITT\dms60567\T-RTC_Dxs_shdgn

REG	STATE	PROJECT	SHEET NO.
-	VA	VA-A-AD-48(1)	T37

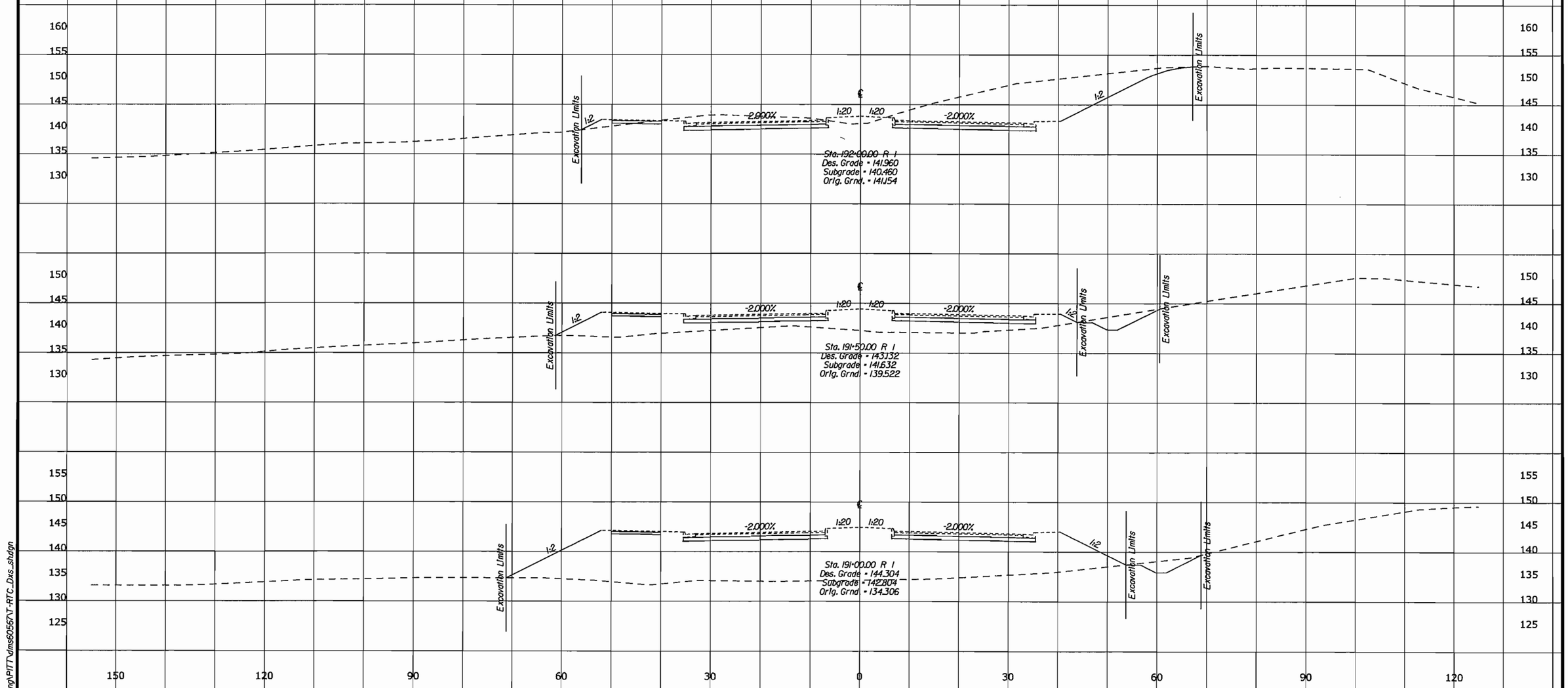

U.S. DEPARTMENT OF TRANSPORTATION
FEDERAL HIGHWAY ADMINISTRATION
EASTERN FEDERAL LANDS HIGHWAY DIVISION
STERLING, VIRGINIA

FORT BELVOIR - MULLIGAN ROAD

CROSS SECTIONS

MULLIGAN ROAD

191+00.00 TO 192+00.00

6/10/2008 10:16:53 AM\\PWworking\PITT\dms60567\T-RTC_Dxs.shdgn

REG	STATE	PROJECT	SHEET NO.
-	VA	VA-A-AD-48(1)	T38

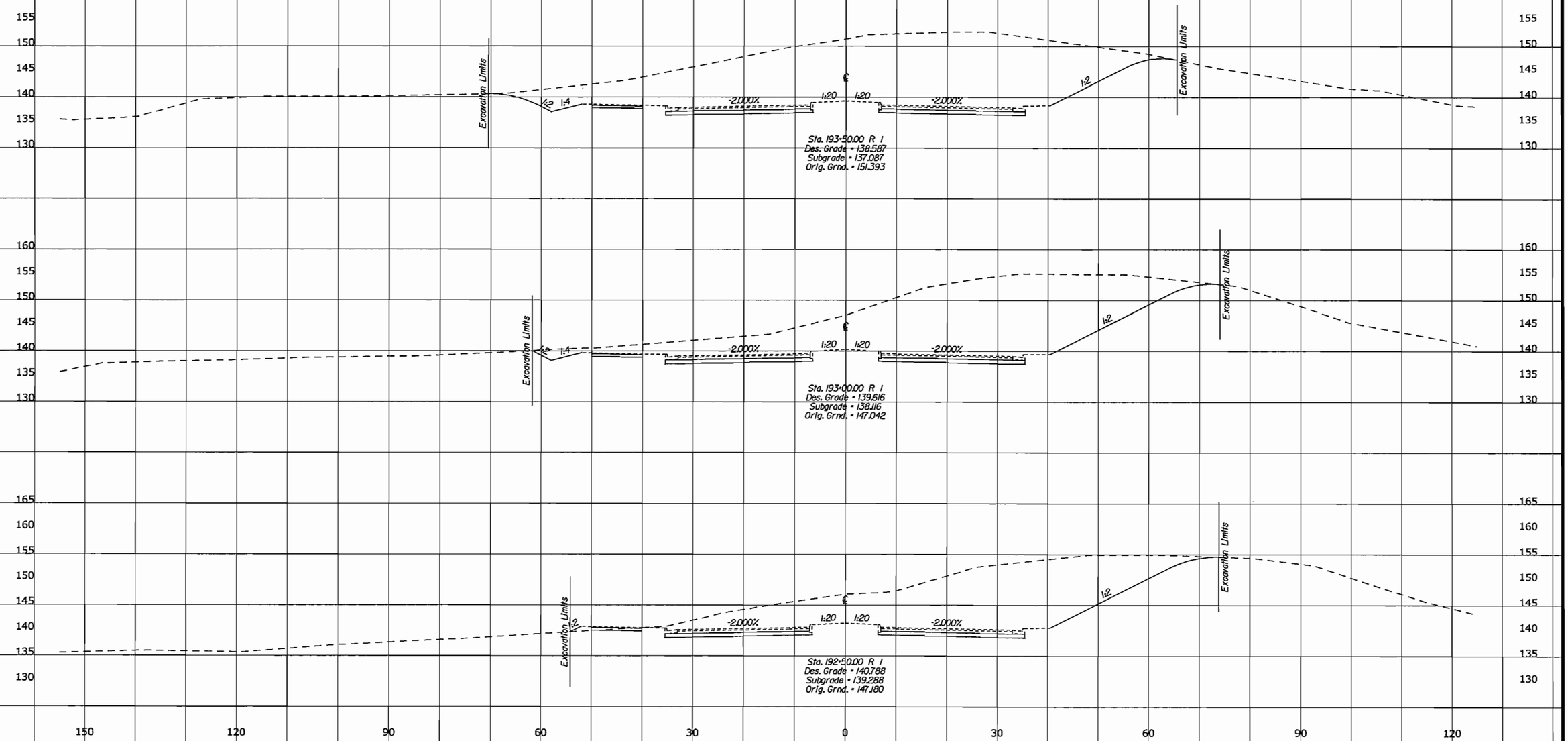

U.S. DEPARTMENT OF TRANSPORTATION
FEDERAL HIGHWAY ADMINISTRATION
EASTERN FEDERAL LANDS HIGHWAY DIVISION
STERLING, VIRGINIA

FORT BELVOIR - MULLIGAN ROAD

CROSS SECTIONS

MULLIGAN ROAD

192+50.00 TO 193+50.00

6/10/2008 10:16:53 M:\PWworking\PITT\dms60567\T-RTC_Dxs.dgn

REG	STATE	PROJECT	SHEET NO.
-	VA	VA-A-AD-48(1)	T39

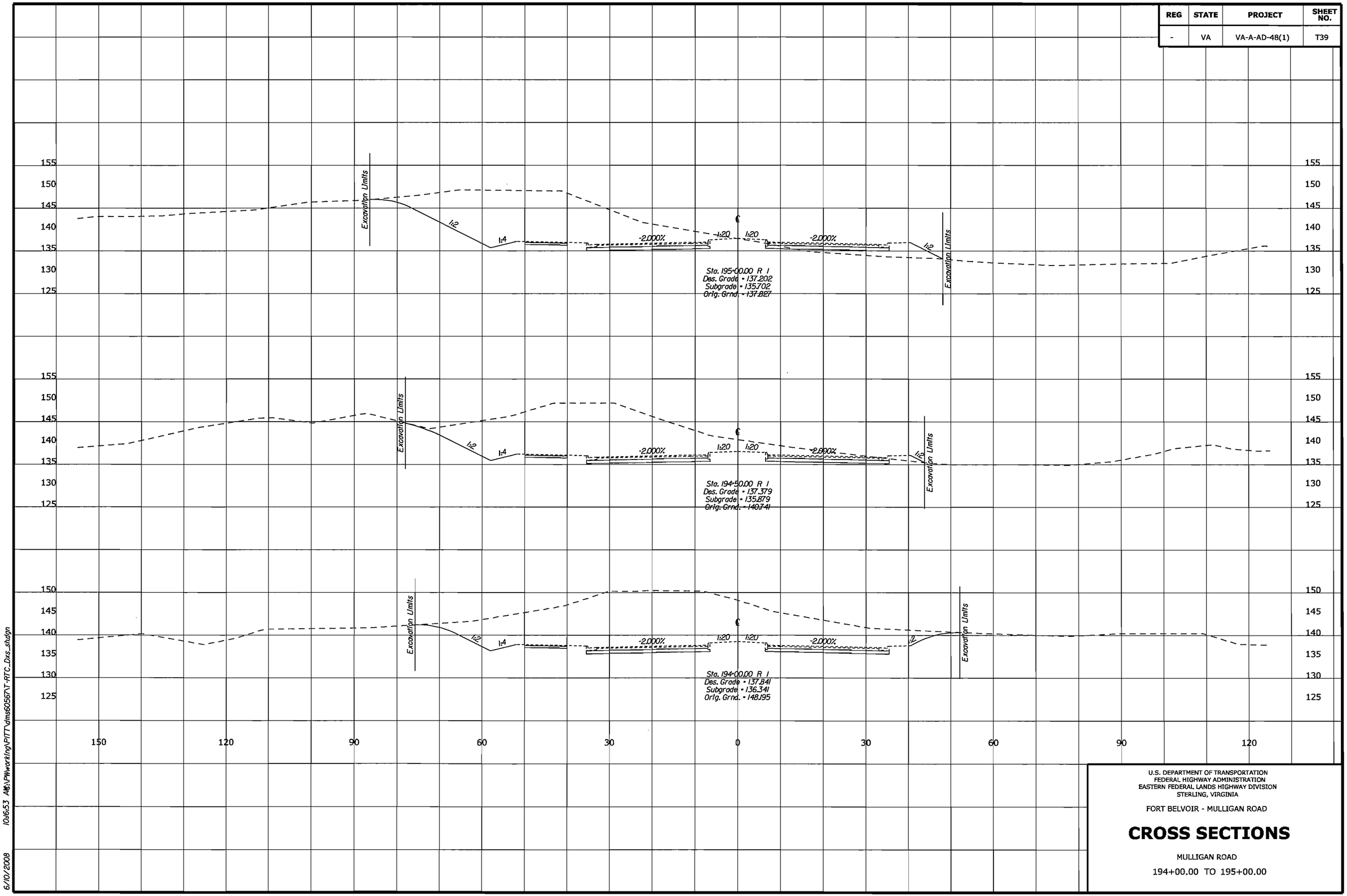

U.S. DEPARTMENT OF TRANSPORTATION
FEDERAL HIGHWAY ADMINISTRATION
EASTERN FEDERAL LANDS HIGHWAY DIVISION
STERLING, VIRGINIA

FORT BELVOIR - MULLIGAN ROAD

CROSS SECTIONS

MULLIGAN ROAD

194+00.00 TO 195+00.00

6/10/2008 10:46:53 AM:\PWworking\PITT\dms60567\T-RTC_Dxs_shdgn

REG	STATE	PROJECT	SHEET NO.
-	VA	VA-A-AD-48(1)	T40

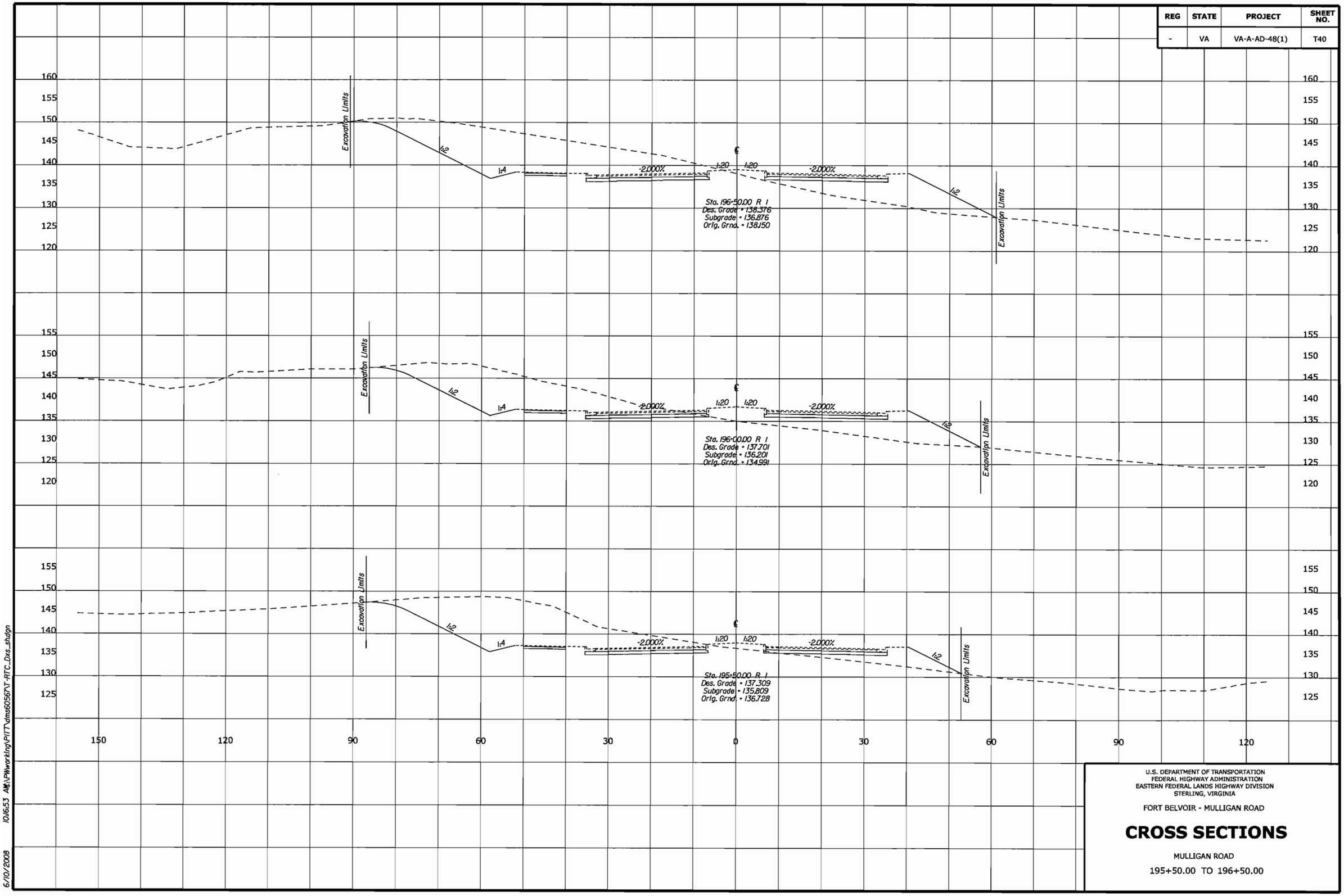

U.S. DEPARTMENT OF TRANSPORTATION
FEDERAL HIGHWAY ADMINISTRATION
EASTERN FEDERAL LANDS HIGHWAY DIVISION
STERLING, VIRGINIA

FORT BELVOIR - MULLIGAN ROAD

CROSS SECTIONS

MULLIGAN ROAD

195+50.00 TO 196+50.00

6/10/2008 10:46:53 AM:\PWworking\PITT\dms60567\T-RTC_Dxs.dgn

REG	STATE	PROJECT	SHEET NO.
-	VA	VA-A-AD-48(1)	T41

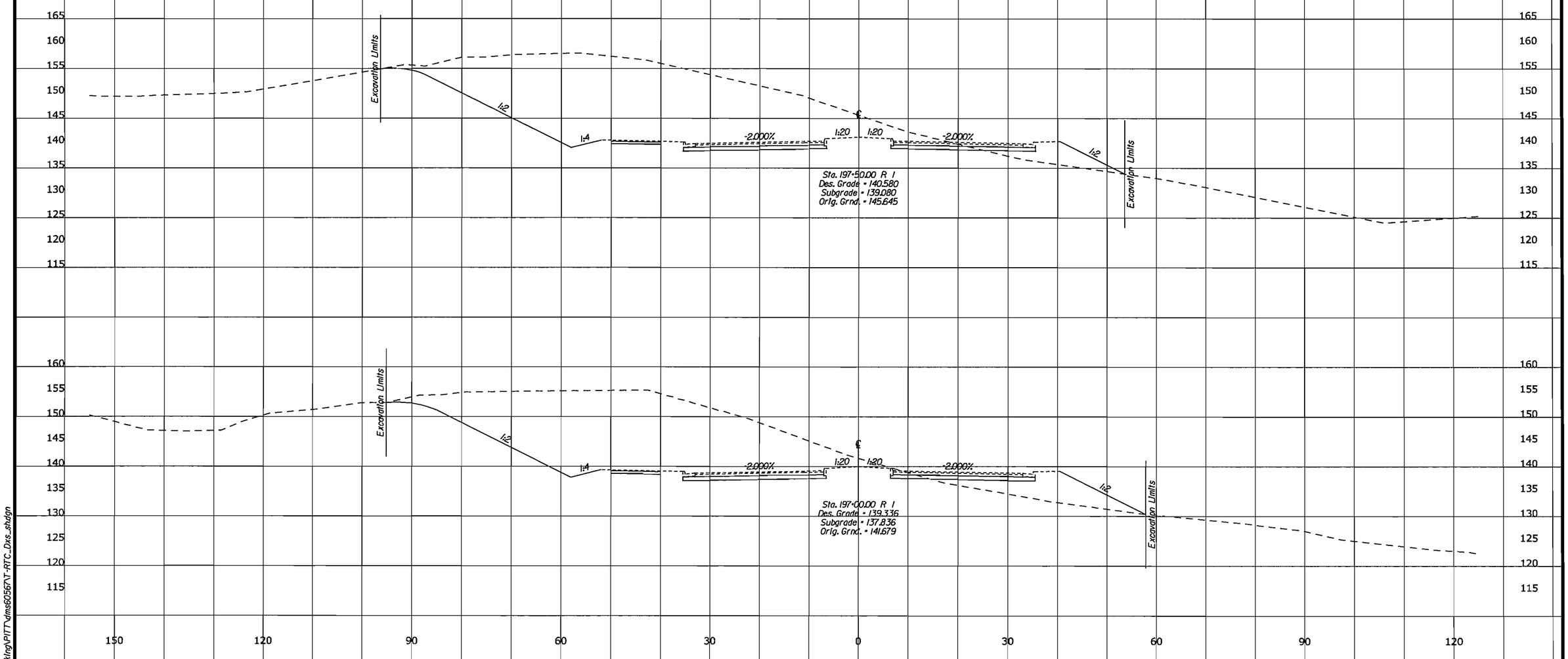

U.S. DEPARTMENT OF TRANSPORTATION
FEDERAL HIGHWAY ADMINISTRATION
EASTERN FEDERAL LANDS HIGHWAY DIVISION
STERLING, VIRGINIA

FORT BELVOIR - MULLIGAN ROAD

CROSS SECTIONS

MULLIGAN ROAD

197+00.00 TO 197+50.00

6/10/2008 10:46:53 A:\PWworking\PITT\dms6056\T-RTC_Dxs_shdgn

REG	STATE	PROJECT	SHEET NO.
-	VA	VA-A-AD-48(1)	T42

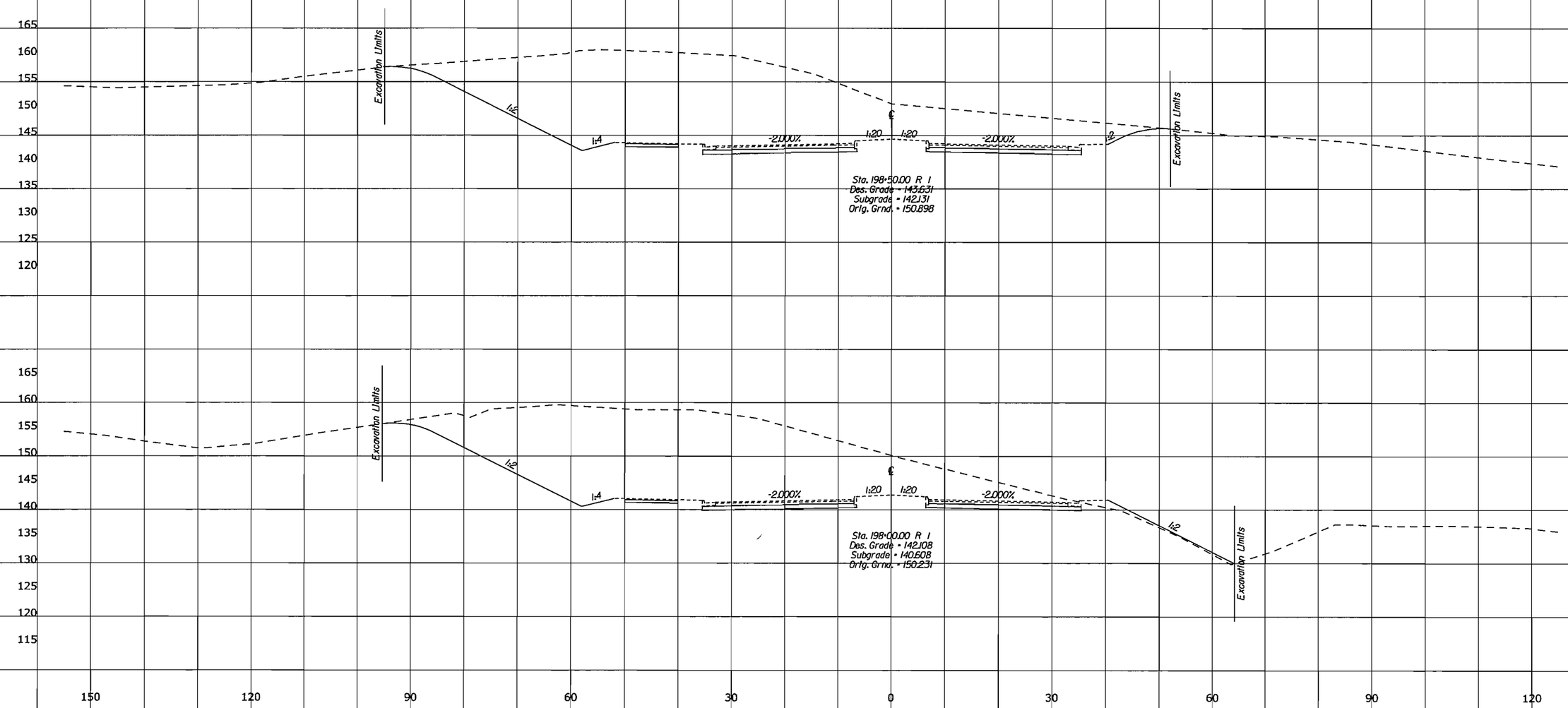

U.S. DEPARTMENT OF TRANSPORTATION
FEDERAL HIGHWAY ADMINISTRATION
EASTERN FEDERAL LANDS HIGHWAY DIVISION
STERLING, VIRGINIA

FORT BELVOIR - MULLIGAN ROAD

CROSS SECTIONS

MULLIGAN ROAD

198+00.00 TO 198+50.00

6/10/2008 10:16:54 AM:\PWworking\PITT\dms6056\T-RTC_Dxs_shdgn

REG	STATE	PROJECT	SHEET NO.
-	VA	VA-A-AD-48(1)	T43

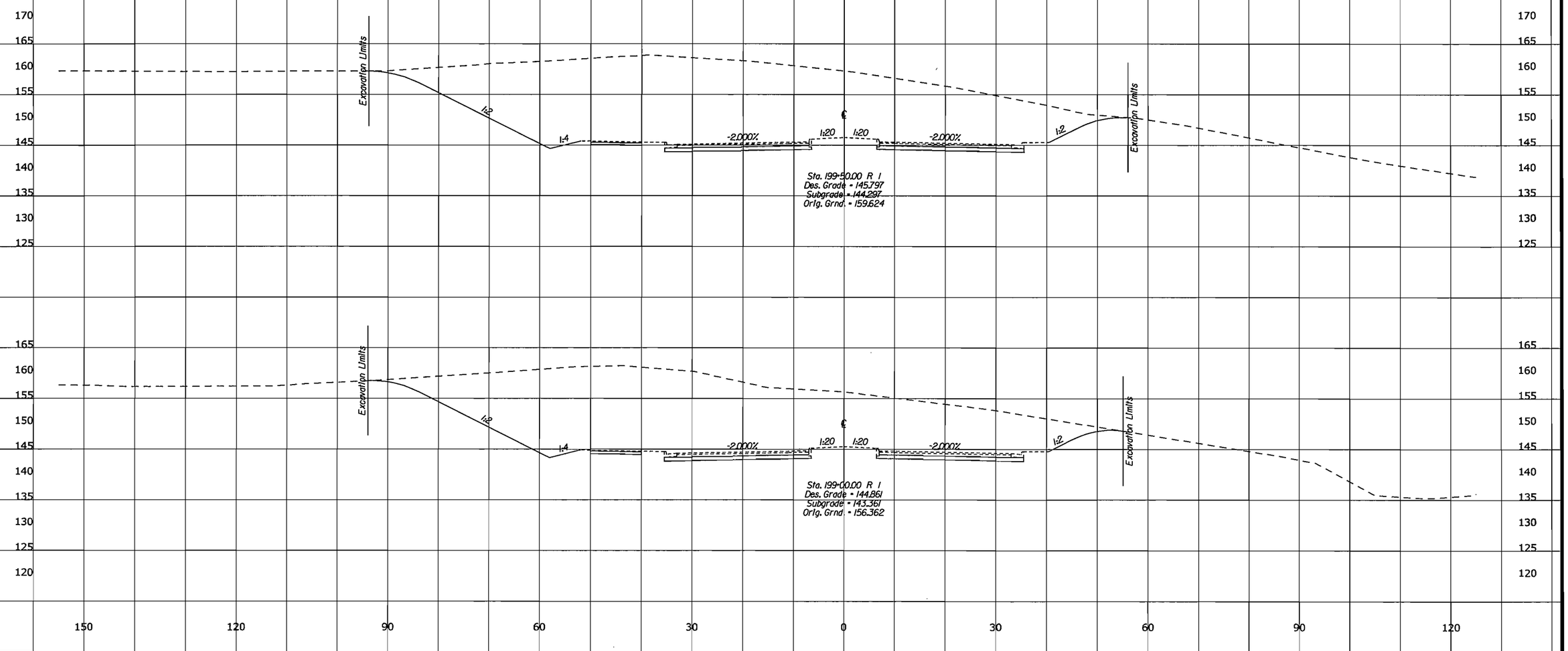

U.S. DEPARTMENT OF TRANSPORTATION
FEDERAL HIGHWAY ADMINISTRATION
EASTERN FEDERAL LANDS HIGHWAY DIVISION
STERLING, VIRGINIA

FORT BELVOIR - MULLIGAN ROAD

CROSS SECTIONS

MULLIGAN ROAD

199+00.00 TO 199+50.00

6/10/2008 10:46:54 AM:\VPWworking\PITT\dms60567\T-RTC_Dxs_std.dgn

REG	STATE	PROJECT	SHEET NO.
-	VA	VA-A-AD-48(1)	T44

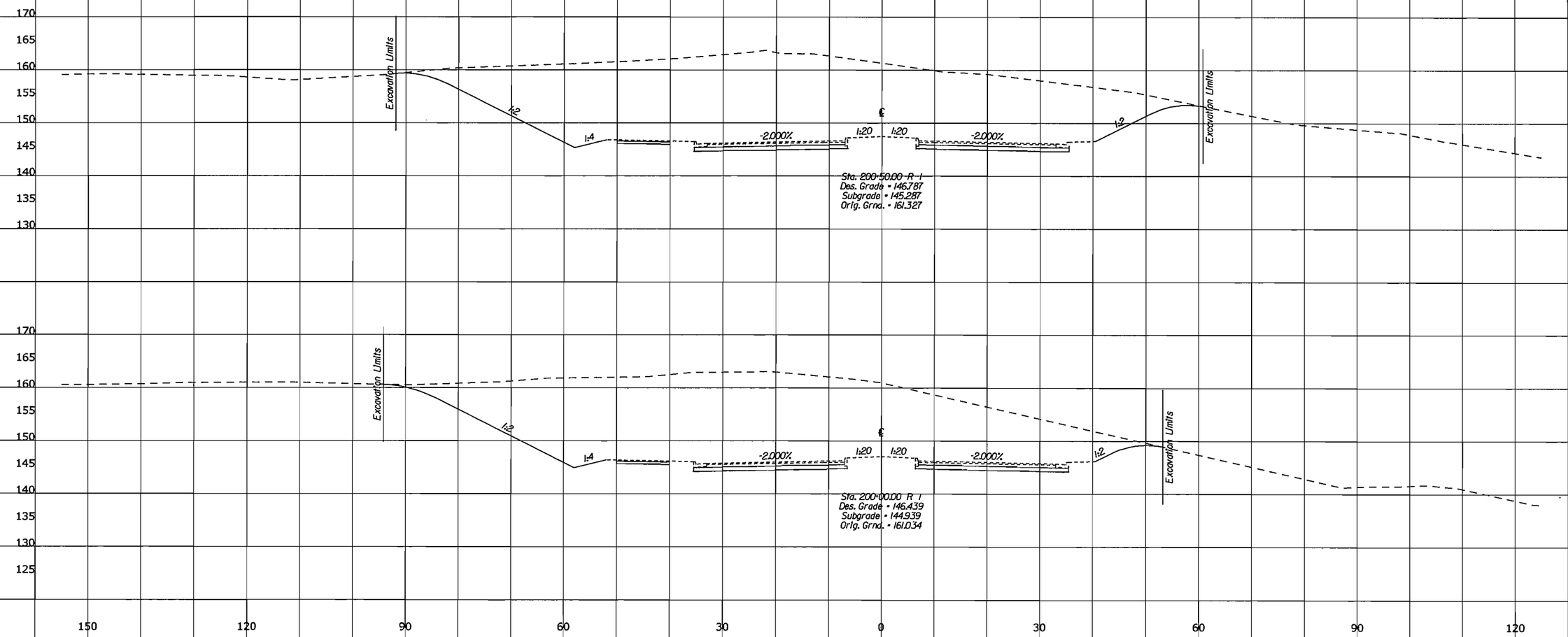

U.S. DEPARTMENT OF TRANSPORTATION
FEDERAL HIGHWAY ADMINISTRATION
EASTERN FEDERAL LANDS HIGHWAY DIVISION
STERLING, VIRGINIA

FORT BELVOIR - MULLIGAN ROAD

CROSS SECTIONS

MULLIGAN ROAD

200+00.00 TO 200+50.00

6/10/2008 10:16:54 AM:\PWworking\PITT\dms6056\T-RTC_Dxs_shdgn

REG	STATE	PROJECT	SHEET NO.
-	VA	VA-A-AD-48(1)	T45

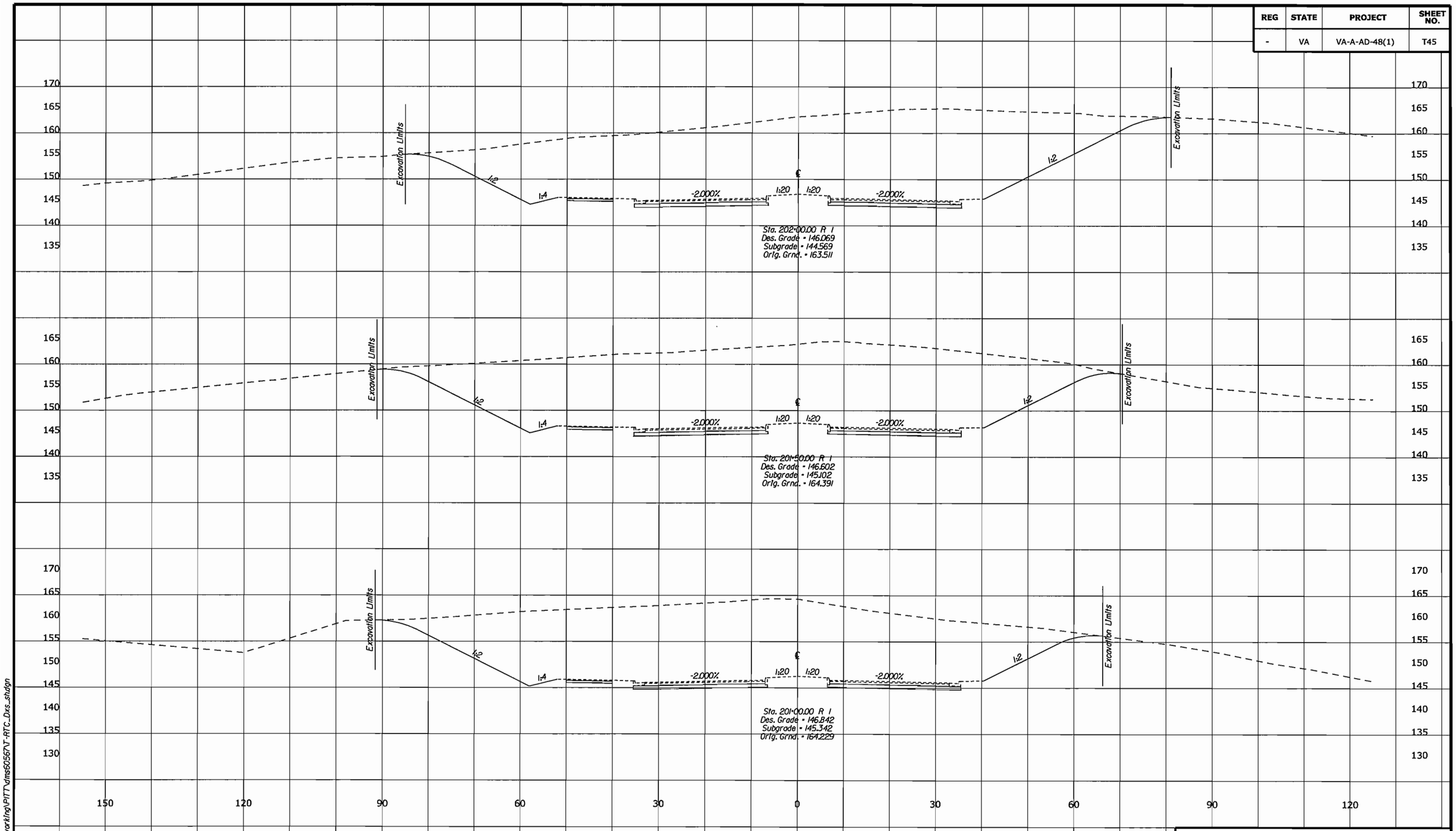

U.S. DEPARTMENT OF TRANSPORTATION
FEDERAL HIGHWAY ADMINISTRATION
EASTERN FEDERAL LANDS HIGHWAY DIVISION
STERLING, VIRGINIA

FORT BELVOIR - MULLIGAN ROAD

CROSS SECTIONS

MULLIGAN ROAD

201+00.00 TO 202+00.00

6/10/2008 10:6:54 AM C:\PWworking\PITT\dms50567\T-RTC_Dxs_shdgn

REG	STATE	PROJECT	SHEET NO.
-	VA	VA-A-AD-48(1)	T46

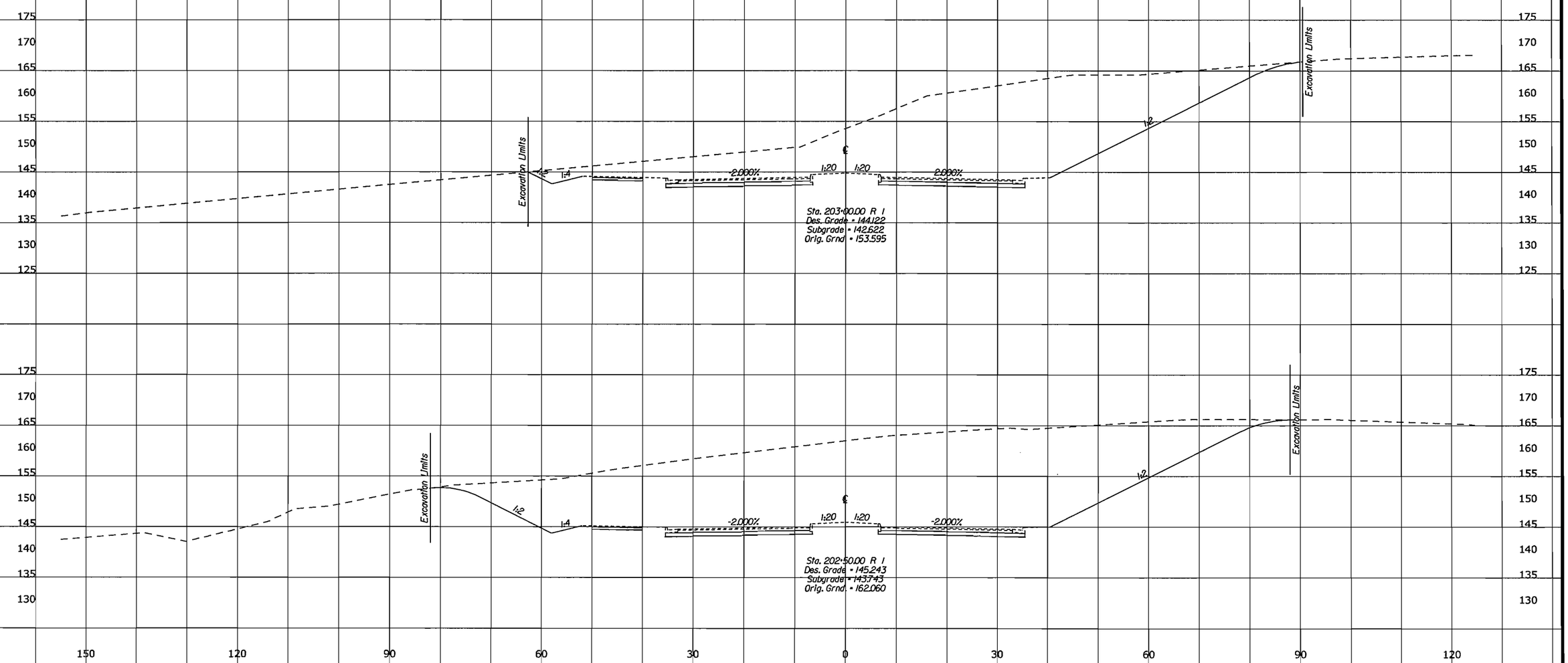

U.S. DEPARTMENT OF TRANSPORTATION
FEDERAL HIGHWAY ADMINISTRATION
EASTERN FEDERAL LANDS HIGHWAY DIVISION
STERLING, VIRGINIA

FORT BELVOIR - MULLIGAN ROAD

CROSS SECTIONS

MULLIGAN ROAD

202+50.00 TO 203+00.00

6/10/2008 10:16:54 AM:\PWworking\PITT\dms50567\T-RTC_Dxs_shdgn

REG	STATE	PROJECT	SHEET NO.
-	VA	VA-A-AD-48(1)	T47

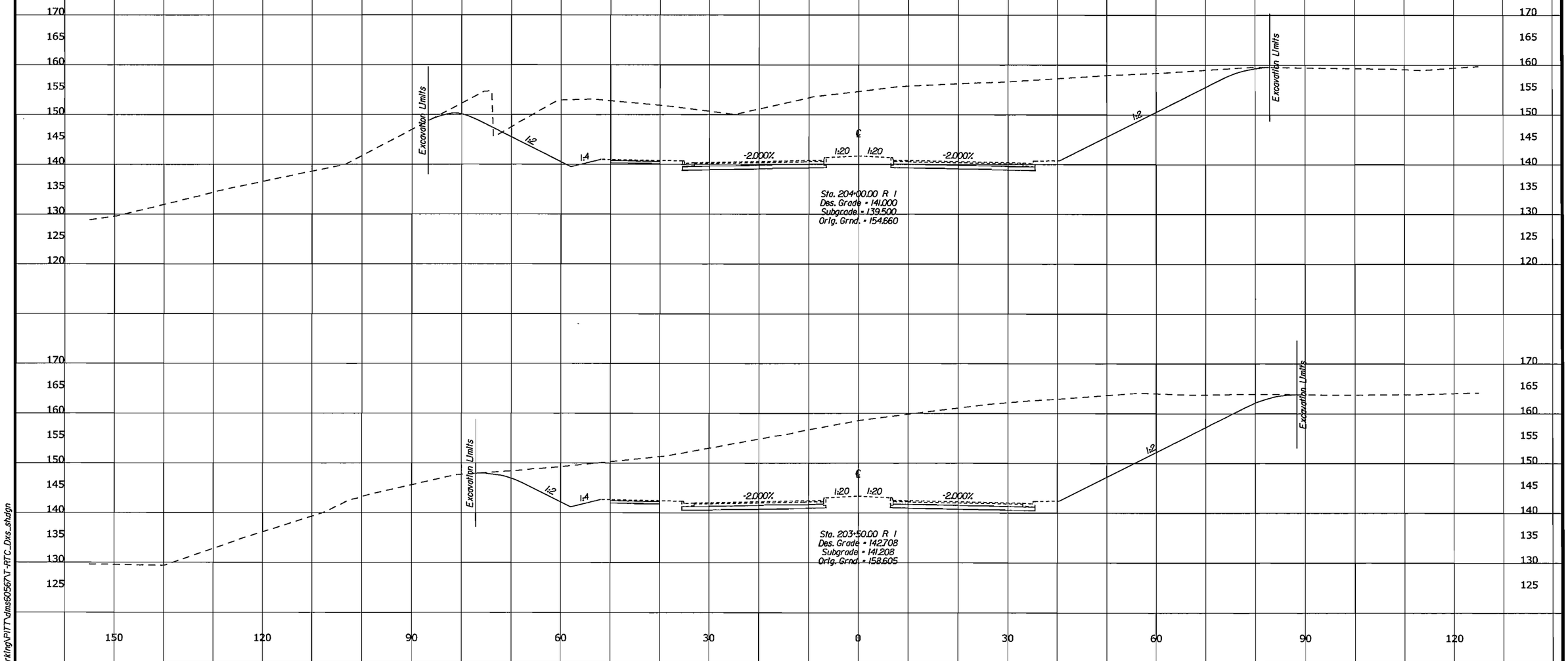

U.S. DEPARTMENT OF TRANSPORTATION
FEDERAL HIGHWAY ADMINISTRATION
EASTERN FEDERAL LANDS HIGHWAY DIVISION
STERLING, VIRGINIA

FORT BELVOIR - MULLIGAN ROAD

CROSS SECTIONS

MULLIGAN ROAD

203+50.00 TO 204+00.00

6/10/2008 10:16:54 AM C:\PWworking\PITT\dms6056\T-RTC_Dxs_shdgn

REG	STATE	PROJECT	SHEET NO.
-	VA	VA-A-AD-48(1)	T48

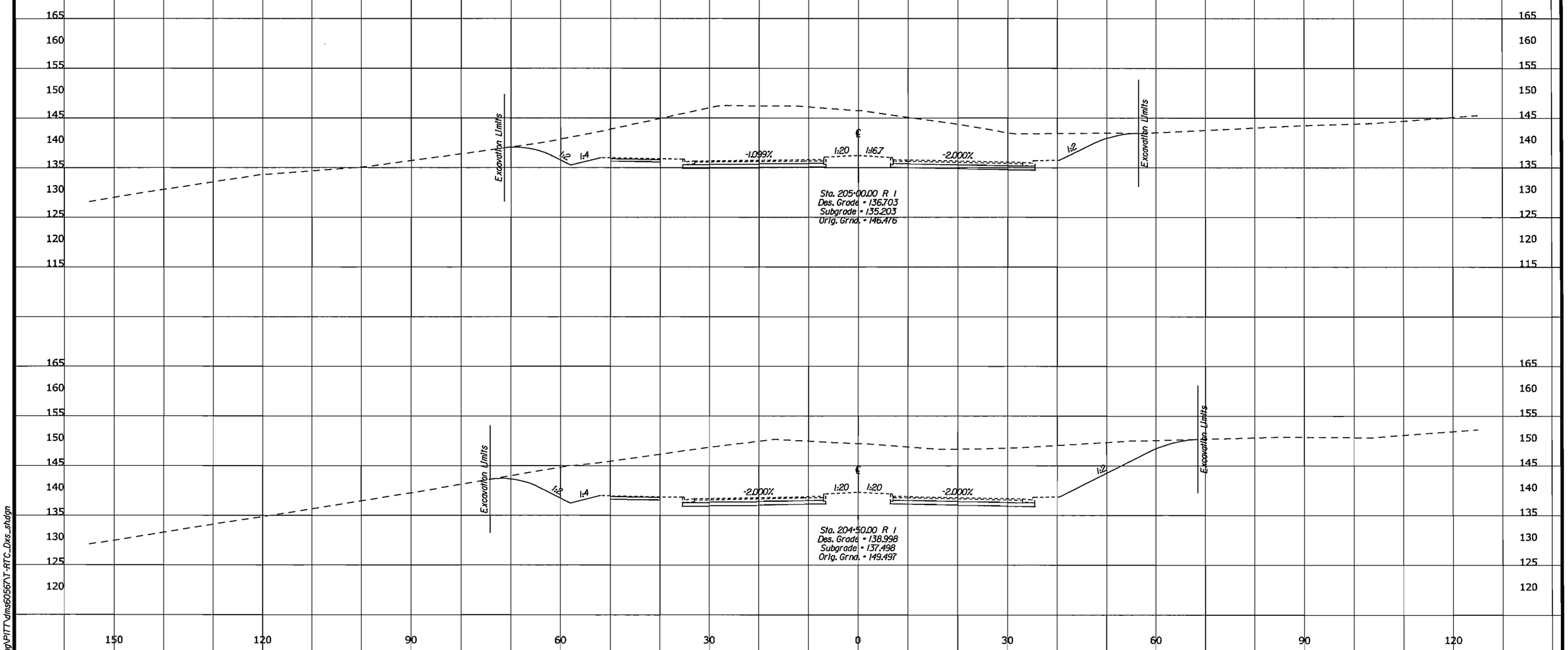

U.S. DEPARTMENT OF TRANSPORTATION
FEDERAL HIGHWAY ADMINISTRATION
EASTERN FEDERAL LANDS HIGHWAY DIVISION
STERLING, VIRGINIA

FORT BELVOIR - MULLIGAN ROAD

CROSS SECTIONS

MULLIGAN ROAD

204+50.00 TO 205+00.00

6/10/2008 10:16:54 AM;\PWworking\PITT\dms6056\T-RTC_Dxs_sht.dgn

REG	STATE	PROJECT	SHEET NO.
-	VA	VA-A-AD-48(1)	T49

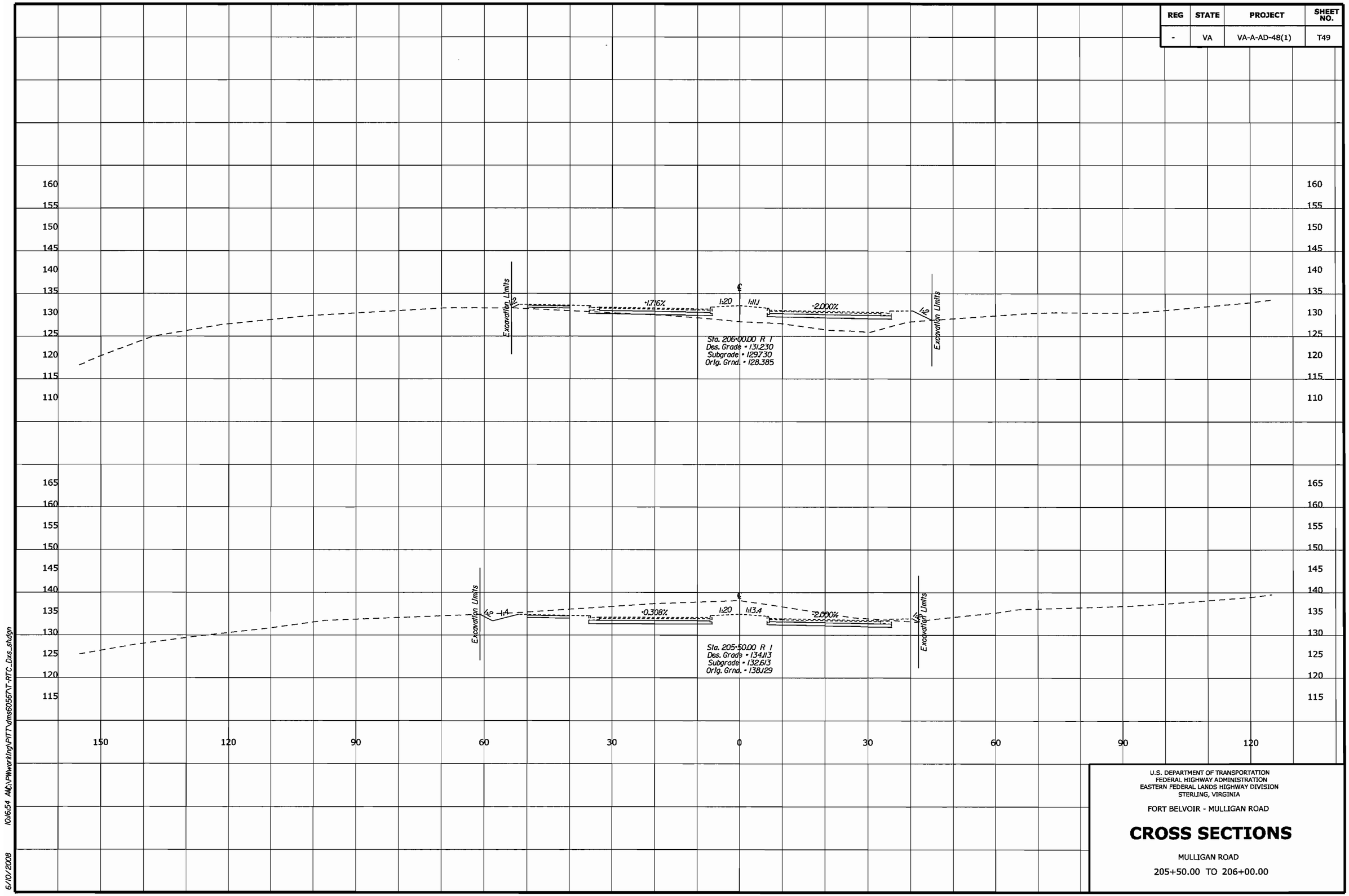

U.S. DEPARTMENT OF TRANSPORTATION
FEDERAL HIGHWAY ADMINISTRATION
EASTERN FEDERAL LANDS HIGHWAY DIVISION
STERLING, VIRGINIA

FORT BELVOIR - MULLIGAN ROAD

CROSS SECTIONS

MULLIGAN ROAD

205+50.00 TO 206+00.00

6/10/2008 10:16:54 AM C:\PWworking\PITT\dms50556\T-RTC_Dxs_shdgn

REG	STATE	PROJECT	SHEET NO.
-	VA	VA-A-AD-48(1)	T50

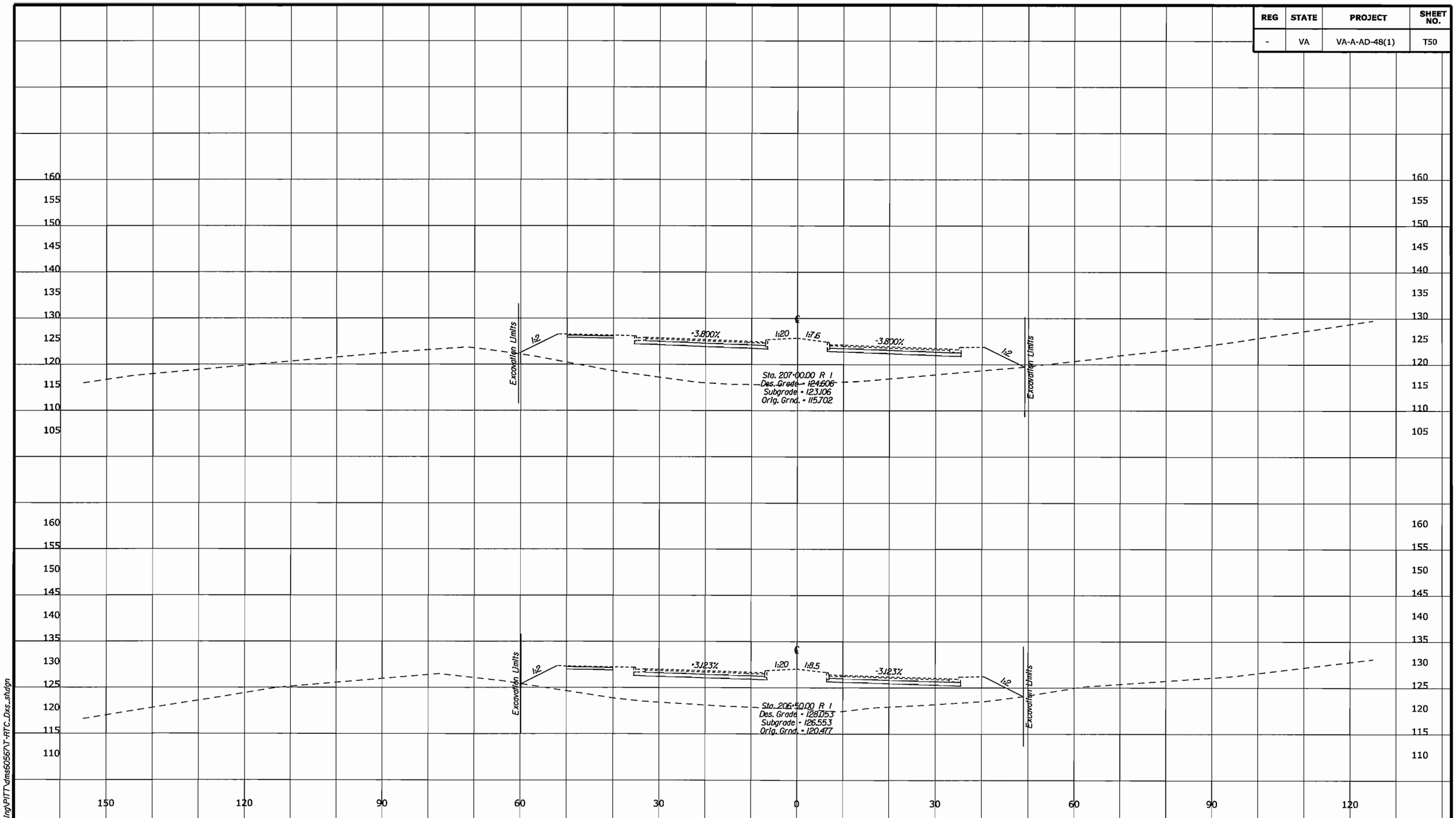

U.S. DEPARTMENT OF TRANSPORTATION
FEDERAL HIGHWAY ADMINISTRATION
EASTERN FEDERAL LANDS HIGHWAY DIVISION
STERLING, VIRGINIA

FORT BELVOIR - MULLIGAN ROAD

CROSS SECTIONS

MULLIGAN ROAD

206+50.00 TO 207+00.00

6/10/2008 10:16:54 AM:\PWworking\PITT\dms60567\T-RTC_Dxs_shdgn

REG	STATE	PROJECT	SHEET NO.
-	VA	VA-A-AD-48(1)	T51

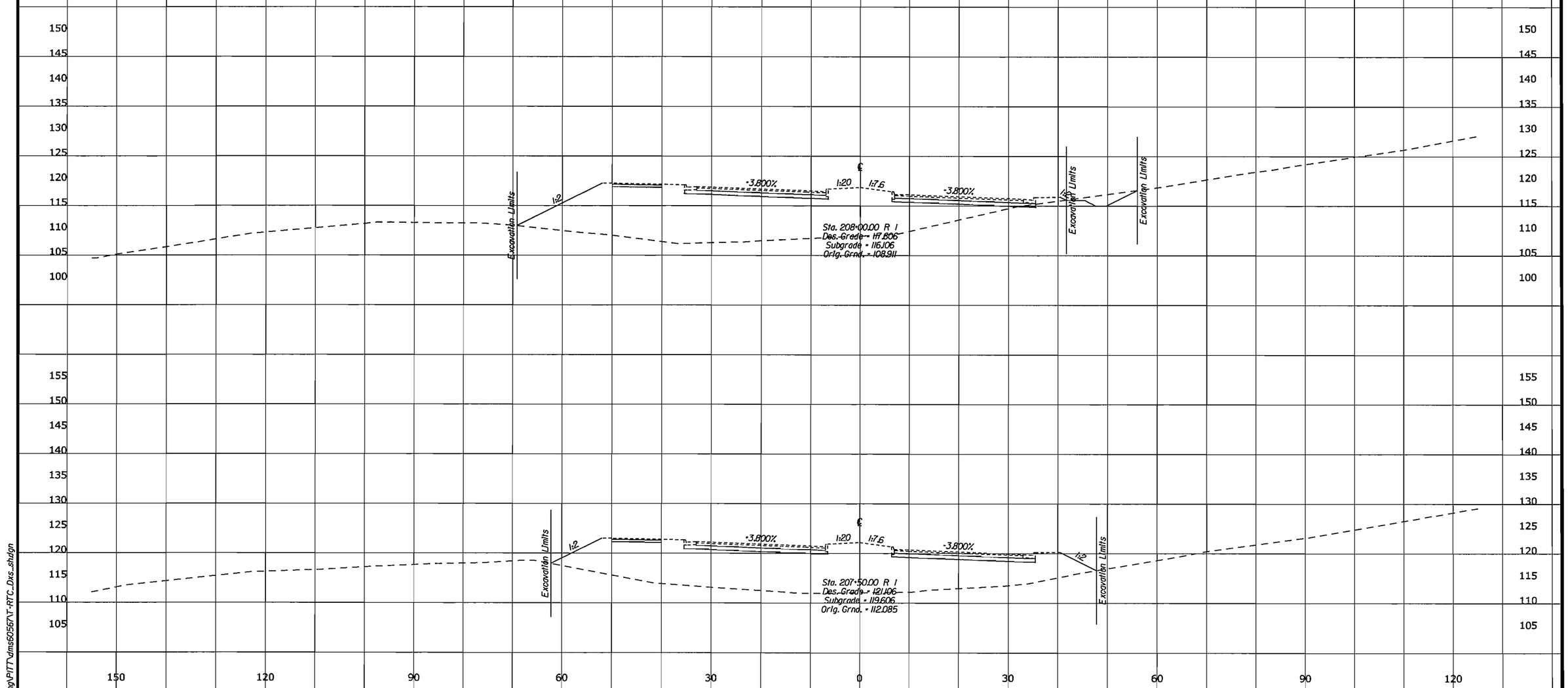

U.S. DEPARTMENT OF TRANSPORTATION
FEDERAL HIGHWAY ADMINISTRATION
EASTERN FEDERAL LANDS HIGHWAY DIVISION
STERLING, VIRGINIA

FORT BELVOIR - MULLIGAN ROAD

CROSS SECTIONS

MULLIGAN ROAD

207+50.00 TO 208+00.00

6/10/2008 10:46:54 AM:\PWworking\PITT\dms50567\T-RTC_Dxs_shdgn

REG	STATE	PROJECT	SHEET NO.
-	VA	VA-A-AD-48(1)	T52

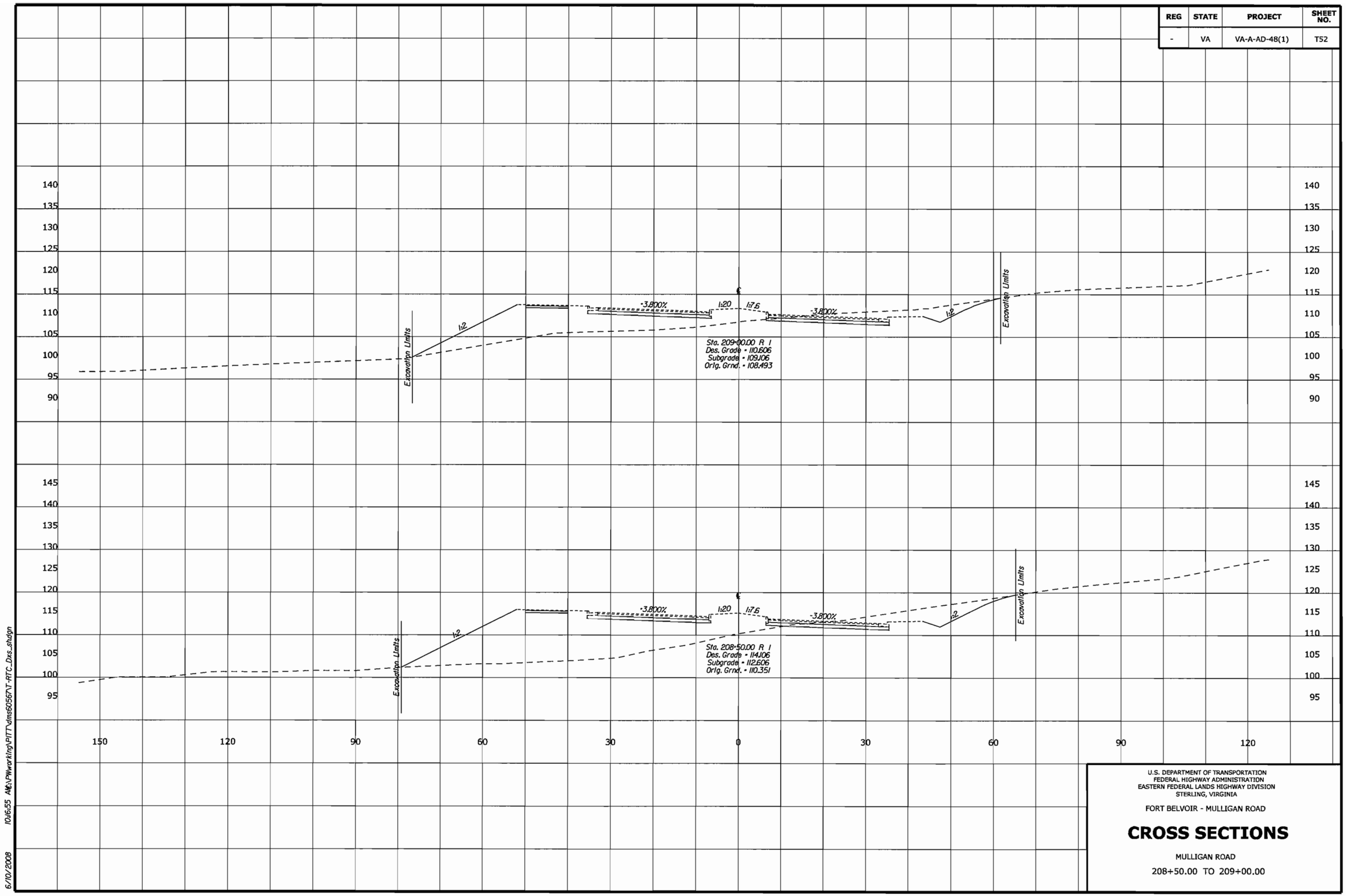

U.S. DEPARTMENT OF TRANSPORTATION
FEDERAL HIGHWAY ADMINISTRATION
EASTERN FEDERAL LANDS HIGHWAY DIVISION
STERLING, VIRGINIA

FORT BELVOIR - MULLIGAN ROAD

CROSS SECTIONS

MULLIGAN ROAD

208+50.00 TO 209+00.00

6/10/2008 10:46:55 A:\PWworking\PITT\dms60567\T-RTC_Dxs_shdgn

REG	STATE	PROJECT	SHEET NO.
-	VA	VA-A-AD-48(1)	T53

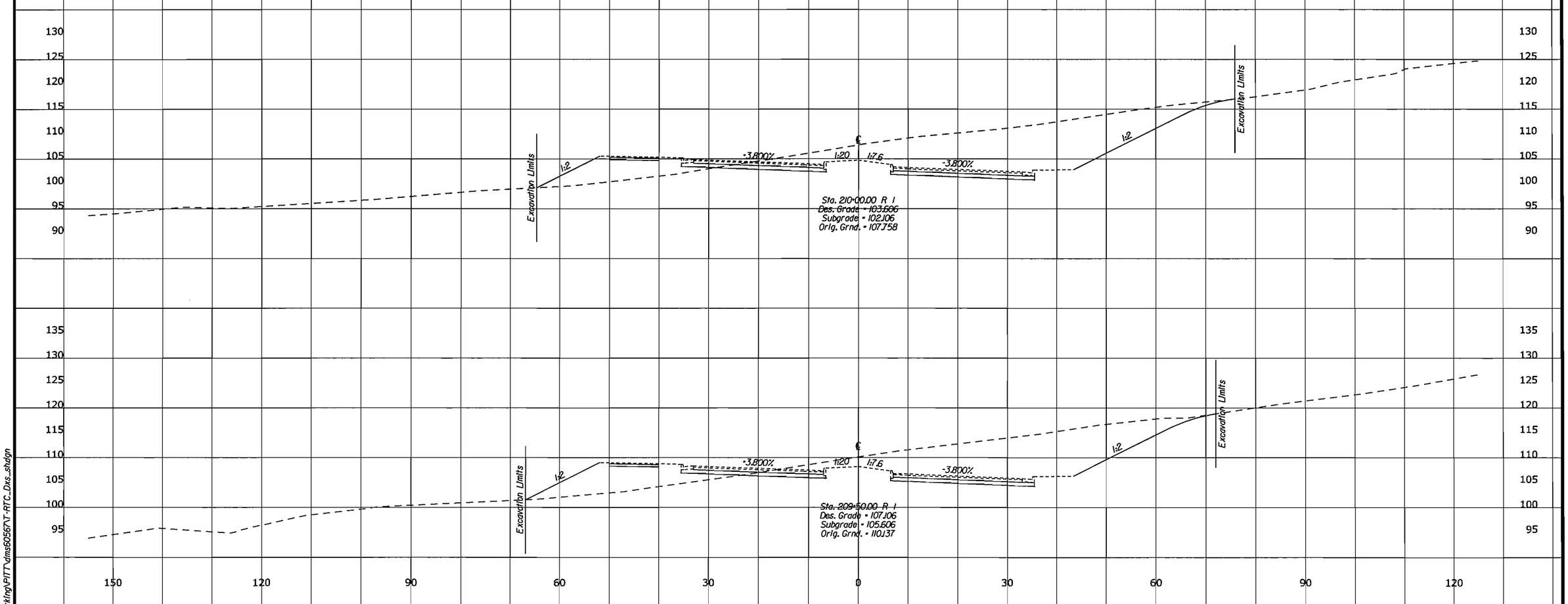

U.S. DEPARTMENT OF TRANSPORTATION
FEDERAL HIGHWAY ADMINISTRATION
EASTERN FEDERAL LANDS HIGHWAY DIVISION
STERLING, VIRGINIA

FORT BELVOIR - MULLIGAN ROAD

CROSS SECTIONS

MULLIGAN ROAD

209+50.00 TO 210+00.00

6/10/2008 10:16:55 AM:\PWworking\PITT\dms50567\T-RTC_Dxs_shdgn

REG	STATE	PROJECT	SHEET NO.
-	VA	VA-A-AD-48(1)	T54

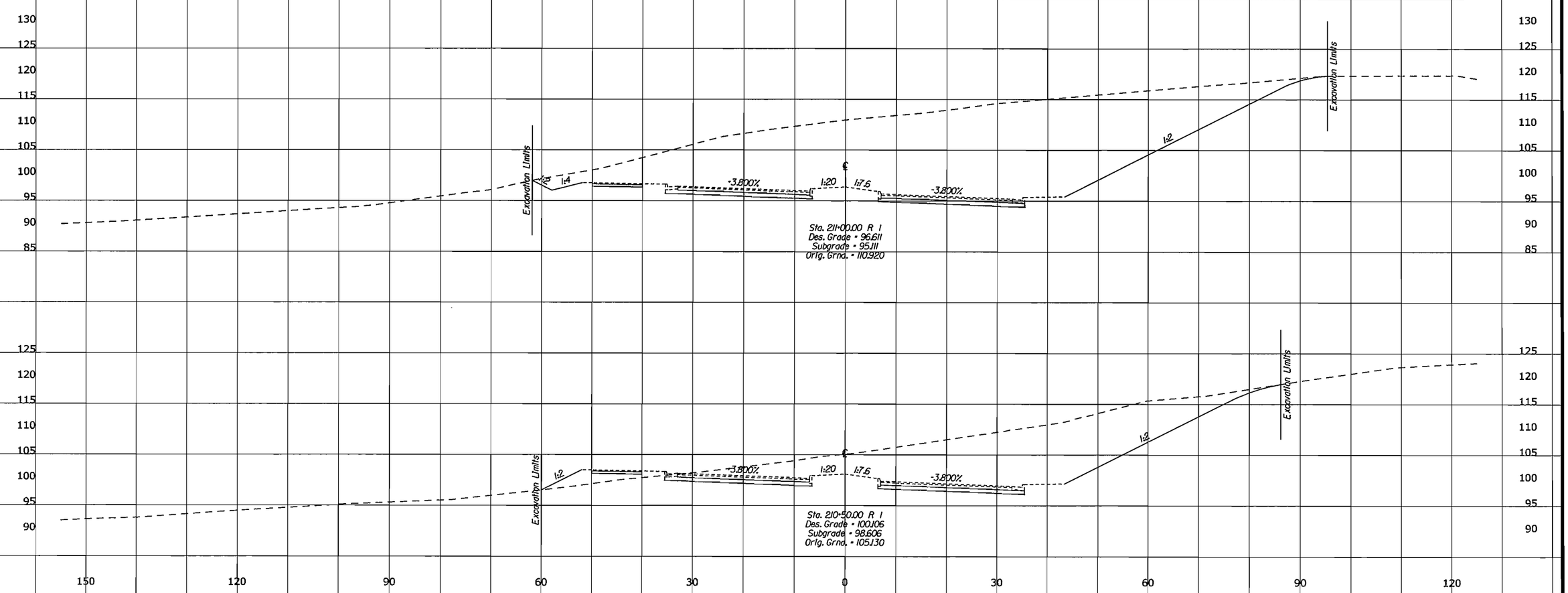

U.S. DEPARTMENT OF TRANSPORTATION
FEDERAL HIGHWAY ADMINISTRATION
EASTERN FEDERAL LANDS HIGHWAY DIVISION
STERLING, VIRGINIA

FORT BELVOIR - MULLIGAN ROAD

CROSS SECTIONS

MULLIGAN ROAD

210+50.00 TO 211+00.00

6/10/2008 10:16:55 A:\PWworking\PITT\dms60567\T-RTC_Dxs_shdgn

REG	STATE	PROJECT	SHEET NO.
-	VA	VA-A-AD-48(1)	T55

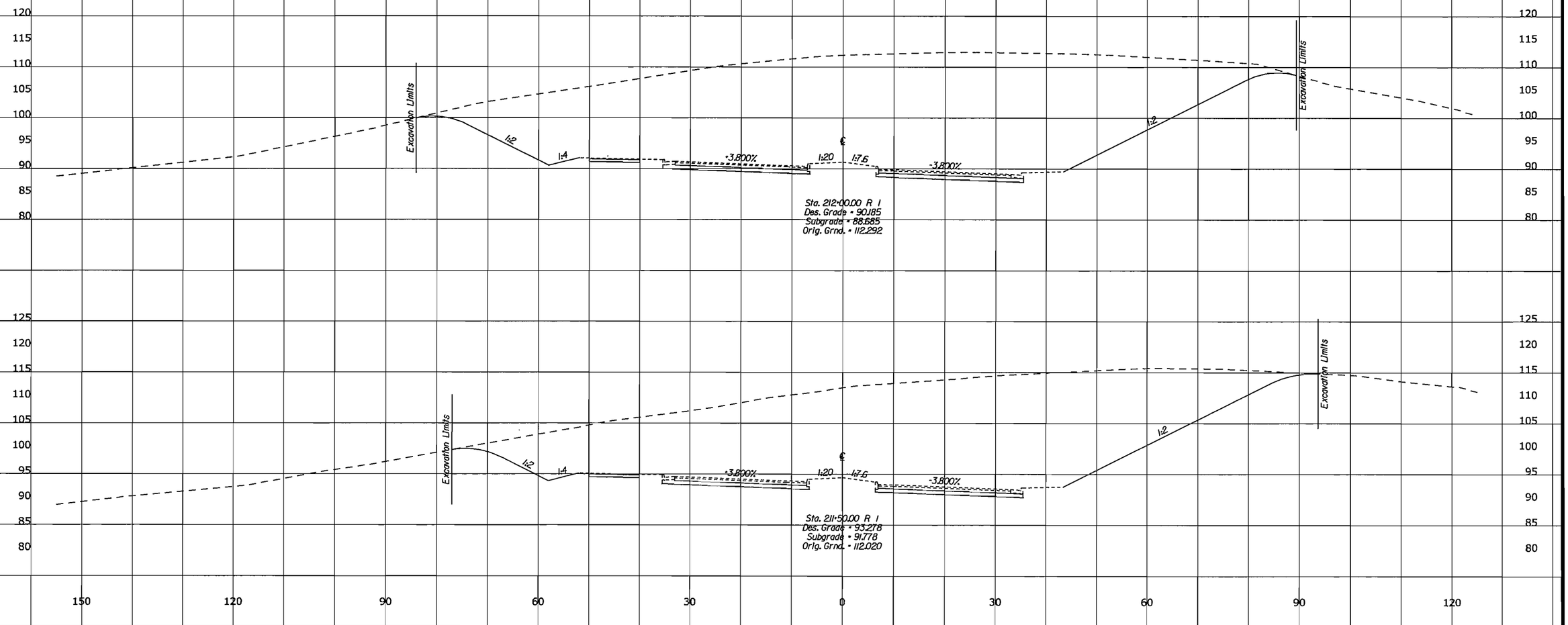

U.S. DEPARTMENT OF TRANSPORTATION
FEDERAL HIGHWAY ADMINISTRATION
EASTERN FEDERAL LANDS HIGHWAY DIVISION
STERLING, VIRGINIA

FORT BELVOIR - MULLIGAN ROAD

CROSS SECTIONS

MULLIGAN ROAD

211+50.00 TO 212+00.00

6/10/2008 10:46:55 A:\PWworking\PITT\dms60567\T-RTC_Dxs_shdgn

REG	STATE	PROJECT	SHEET NO.
-	VA	VA-A-AD-48(1)	T56

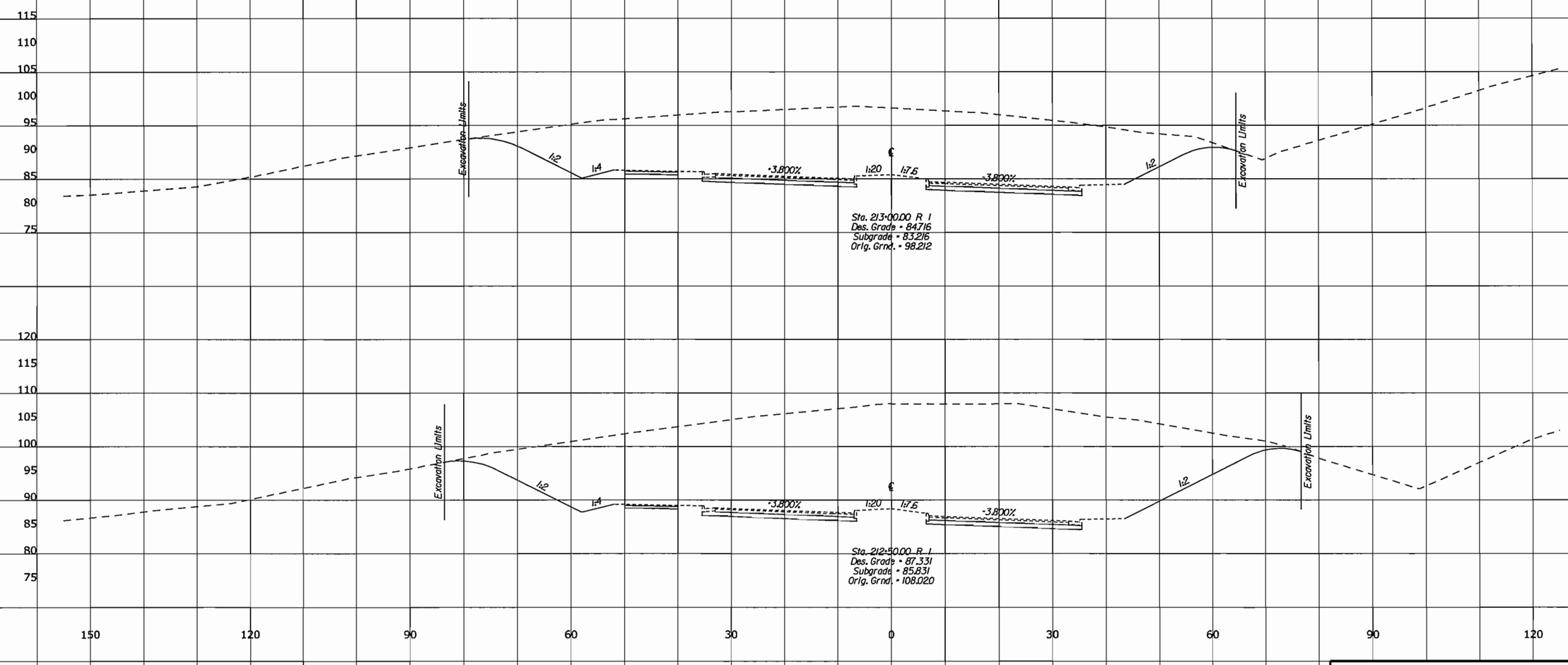

U.S. DEPARTMENT OF TRANSPORTATION
FEDERAL HIGHWAY ADMINISTRATION
EASTERN FEDERAL LANDS HIGHWAY DIVISION
STERLING, VIRGINIA

FORT BELVOIR - MULLIGAN ROAD

CROSS SECTIONS

MULLIGAN ROAD

212+50.00 TO 213+00.00

6/10/2008 10:6:55 AM:\PWworking\PITT\dms6056\T-RTC_Dxs_shdgn

REG	STATE	PROJECT	SHEET NO.
-	VA	VA-A-AD-48(1)	T57

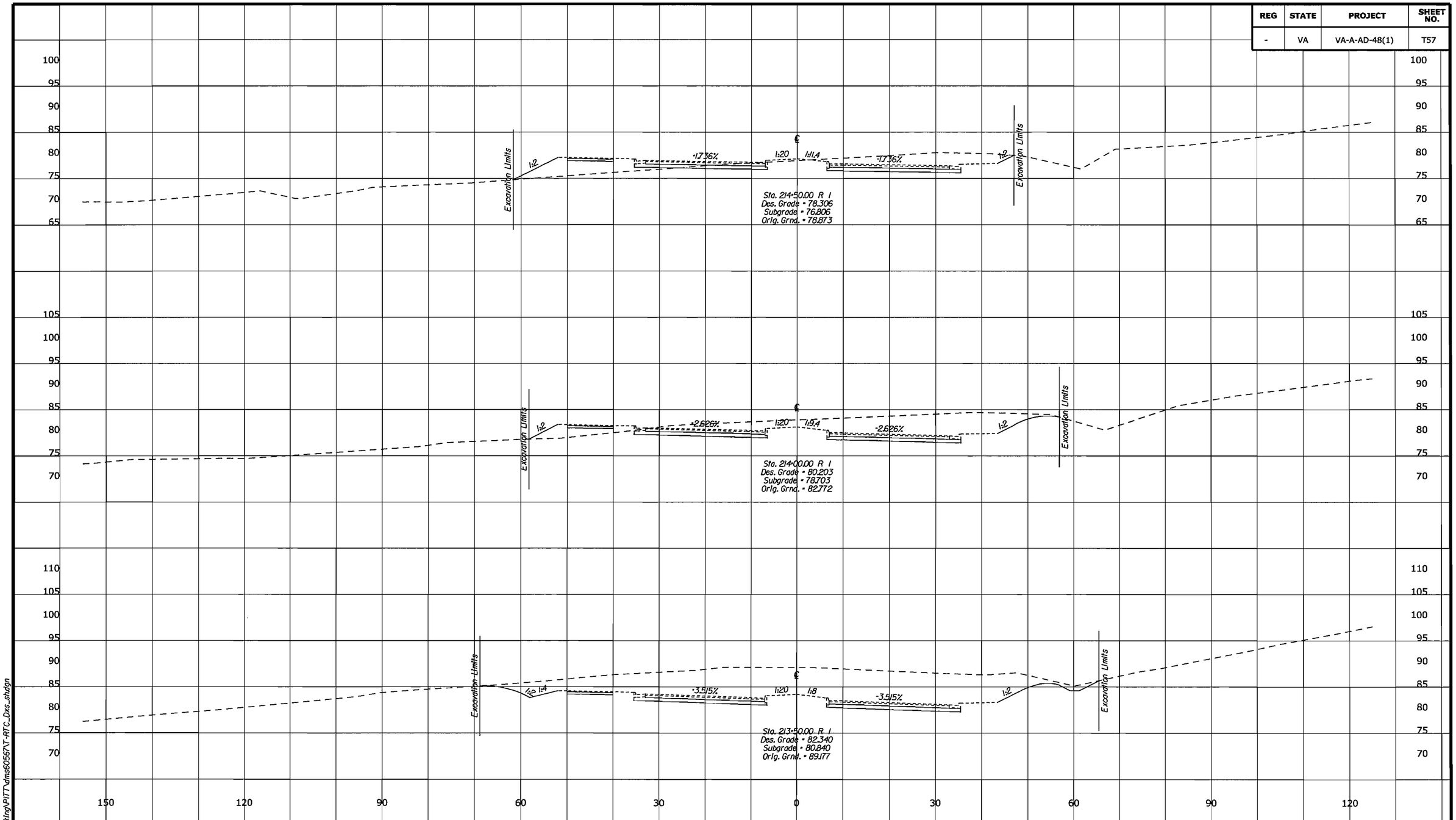

U.S. DEPARTMENT OF TRANSPORTATION
FEDERAL HIGHWAY ADMINISTRATION
EASTERN FEDERAL LANDS HIGHWAY DIVISION
STERLING, VIRGINIA

FORT BELVOIR - MULLIGAN ROAD

CROSS SECTIONS

MULLIGAN ROAD

213+50.00 TO 214+50.00

6/10/2008 10:46:55 A:\PWworking\PITT\dms60567\T-RTC_Dxs_sht.dgn

REG	STATE	PROJECT	SHEET NO.
-	VA	VA-A-AD-48(1)	T58

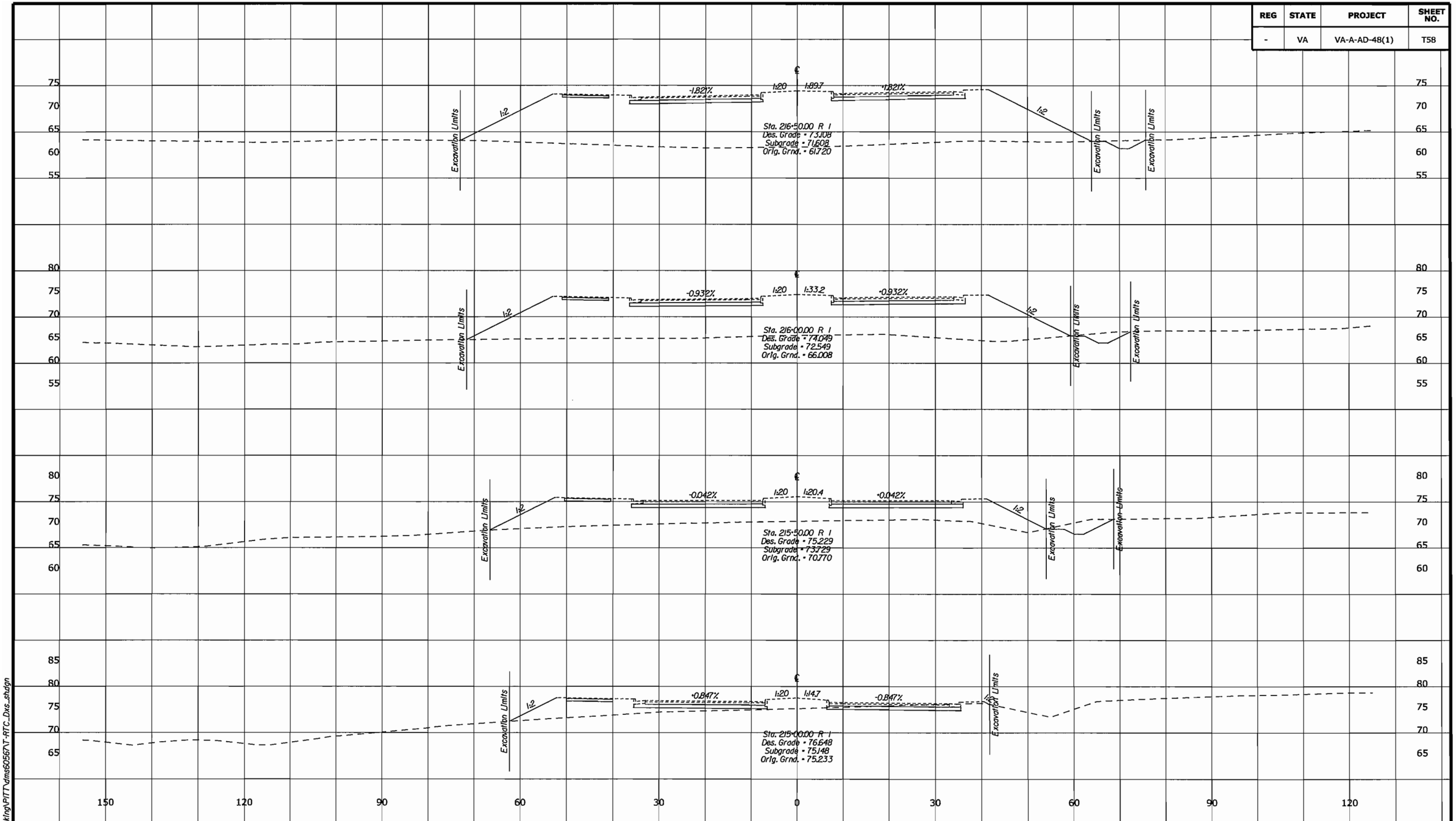

U.S. DEPARTMENT OF TRANSPORTATION
FEDERAL HIGHWAY ADMINISTRATION
EASTERN FEDERAL LANDS HIGHWAY DIVISION
STERLING, VIRGINIA

FORT BELVOIR - MULLIGAN ROAD

CROSS SECTIONS

MULLIGAN ROAD

215+00.00 TO 216+50.00

6/10/2008 10:16:55 A:\PWworking\PITT\dms50567\T-RTC_Dxs.shdgn

REG	STATE	PROJECT	SHEET NO.
-	VA	VA-A-AD-48(1)	T59

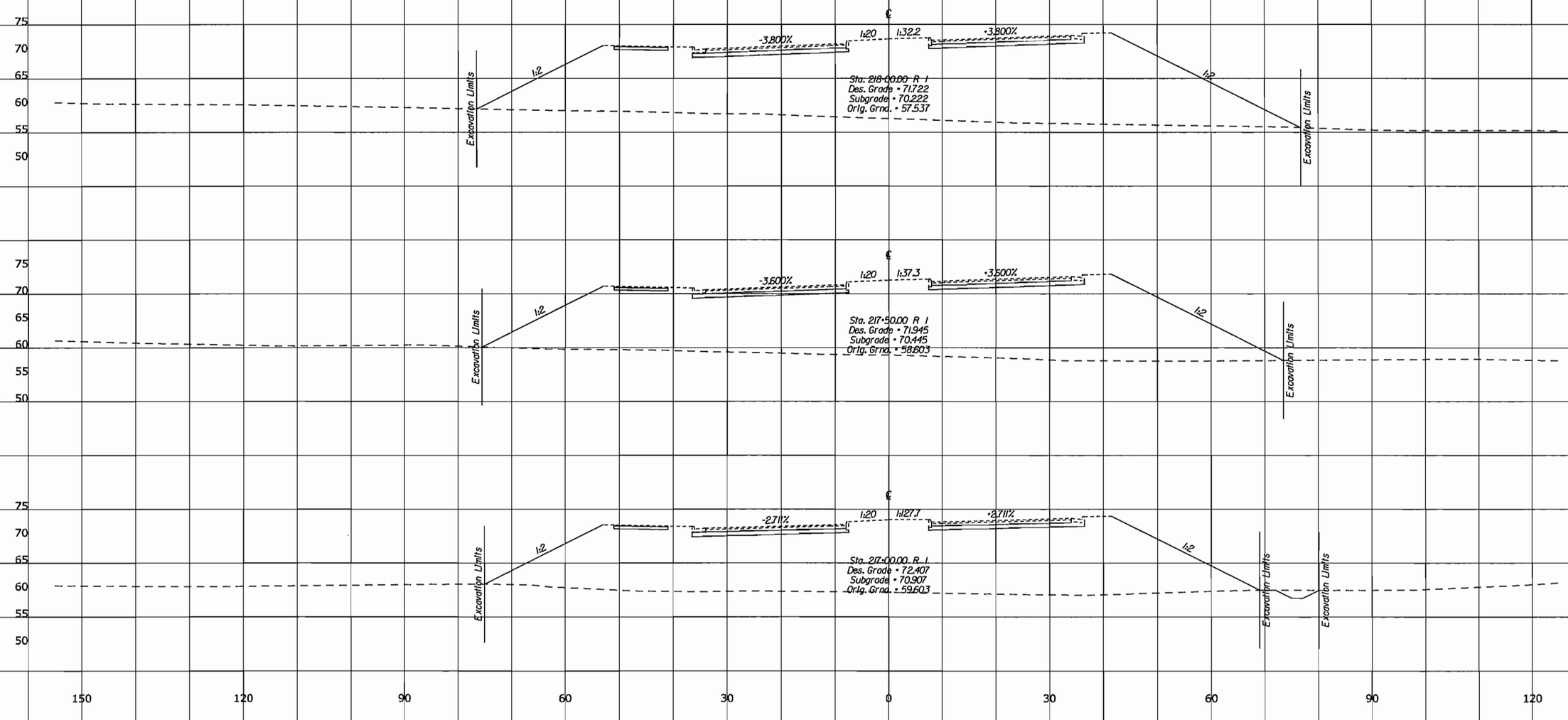

U.S. DEPARTMENT OF TRANSPORTATION
FEDERAL HIGHWAY ADMINISTRATION
EASTERN FEDERAL LANDS HIGHWAY DIVISION
STERLING, VIRGINIA

FORT BELVOIR - MULLIGAN ROAD

CROSS SECTIONS

MULLIGAN ROAD

217+00.00 TO 218+00.00

6/10/2008 10:46:55 AM:\PWworking\PITT\dms6056\T-RTC_Dxs_shdgn

REG	STATE	PROJECT	SHEET NO.
-	VA	VA-A-AD-48(1)	T60

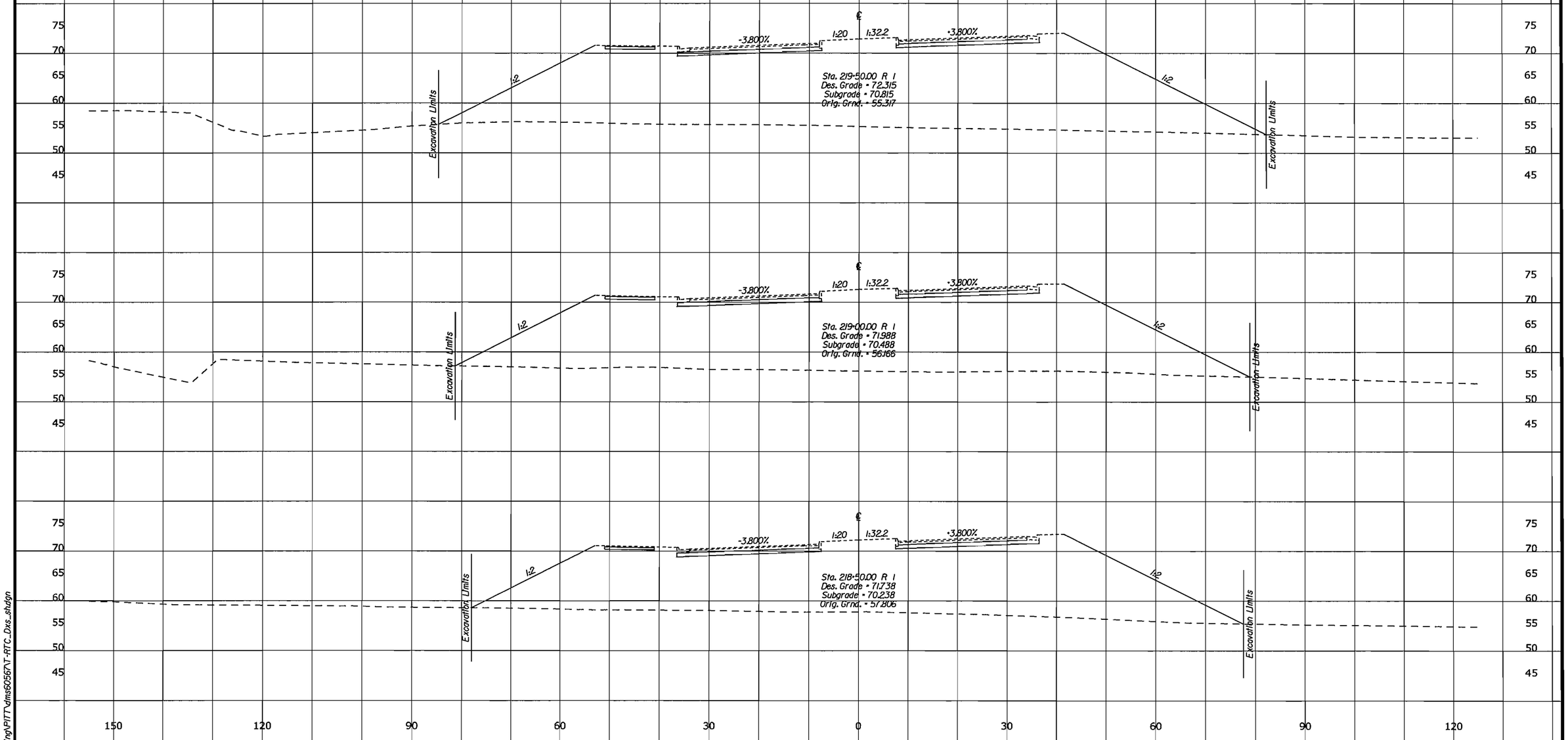

U.S. DEPARTMENT OF TRANSPORTATION
FEDERAL HIGHWAY ADMINISTRATION
EASTERN FEDERAL LANDS HIGHWAY DIVISION
STERLING, VIRGINIA

FORT BELVOIR - MULLIGAN ROAD

CROSS SECTIONS

MULLIGAN ROAD

218+50.00 TO 219+50.00

6/10/2008 10:16:55 AM C:\PWworking\PITT\dms60567\T-RTC_Dxs_sh.dgn

REG	STATE	PROJECT	SHEET NO.
-	VA	VA-A-AD-48(1)	T61

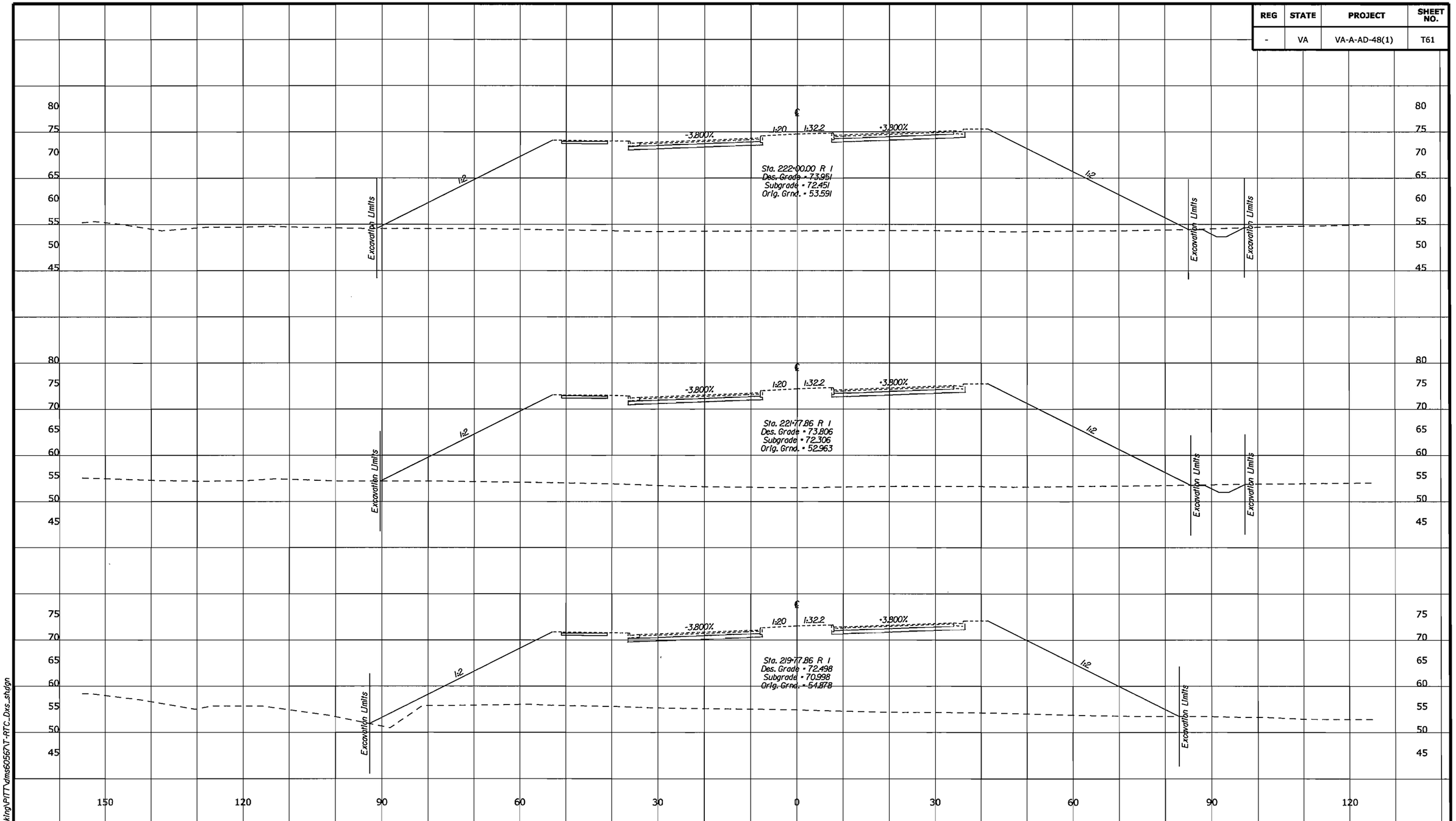

U.S. DEPARTMENT OF TRANSPORTATION
FEDERAL HIGHWAY ADMINISTRATION
EASTERN FEDERAL LANDS HIGHWAY DIVISION
STERLING, VIRGINIA

FORT BELVOIR - MULLIGAN ROAD

CROSS SECTIONS

MULLIGAN ROAD

219+77.86 TO 222+00.00

6/10/2008 10:16:55 AM:\PWworking\PITT\dms60567\T-RTC_Dxs.shdgn

REG	STATE	PROJECT	SHEET NO.
-	VA	VA-A-AD-48(1)	T62

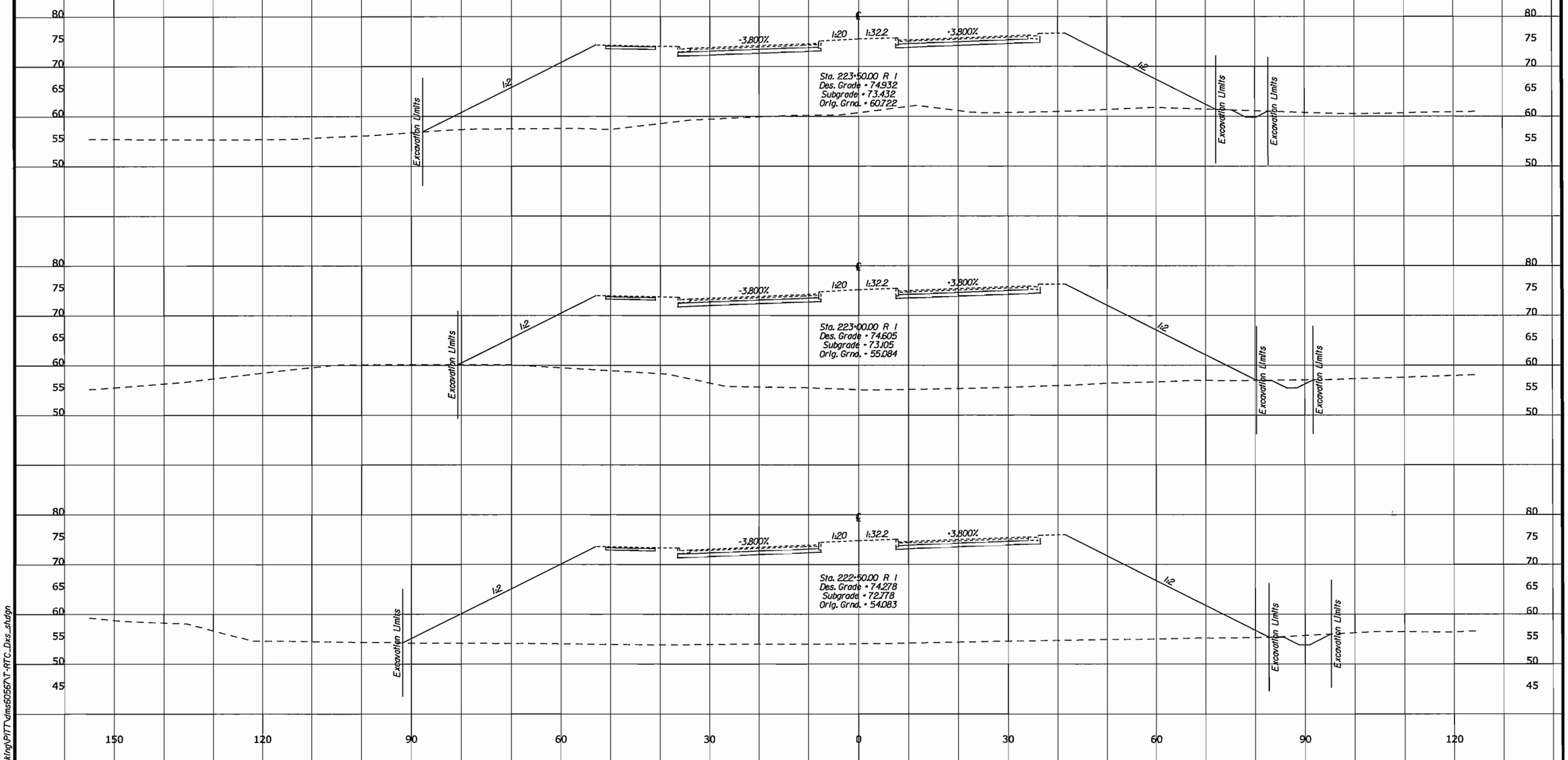

U.S. DEPARTMENT OF TRANSPORTATION
FEDERAL HIGHWAY ADMINISTRATION
EASTERN FEDERAL LANDS HIGHWAY DIVISION
STERLING, VIRGINIA

FORT BELVOIR - MULLIGAN ROAD

CROSS SECTIONS

MULLIGAN ROAD

222+50.00 TO 223+50.00

6/10/2008 10:16:56 AM C:\PWworking\PITT\dms50567\T-RTC_Dxs.dgn

REG	STATE	PROJECT	SHEET NO.
-	VA	VA-A-AD-48(1)	T63

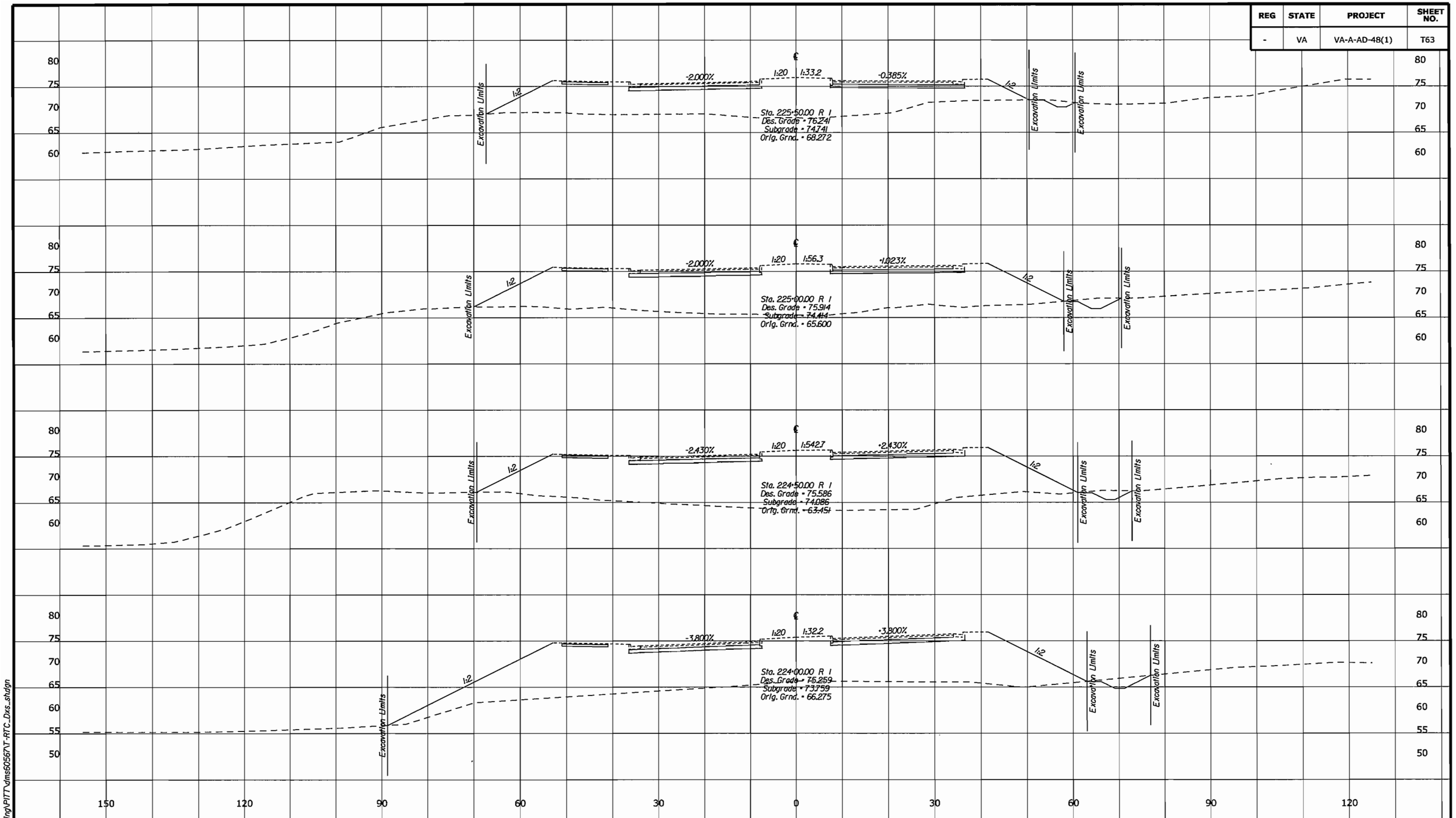

U.S. DEPARTMENT OF TRANSPORTATION
FEDERAL HIGHWAY ADMINISTRATION
EASTERN FEDERAL LANDS HIGHWAY DIVISION
STERLING, VIRGINIA

FORT BELVOIR - MULLIGAN ROAD

CROSS SECTIONS

MULLIGAN ROAD

224+00.00 TO 225+50.00

6/10/2008 10:16:56 AM;\PWworking\PITT\dms6056\T-RTC_Dxs_shdgn

REG	STATE	PROJECT	SHEET NO.
-	VA	VA-A-AD-48(1)	T64

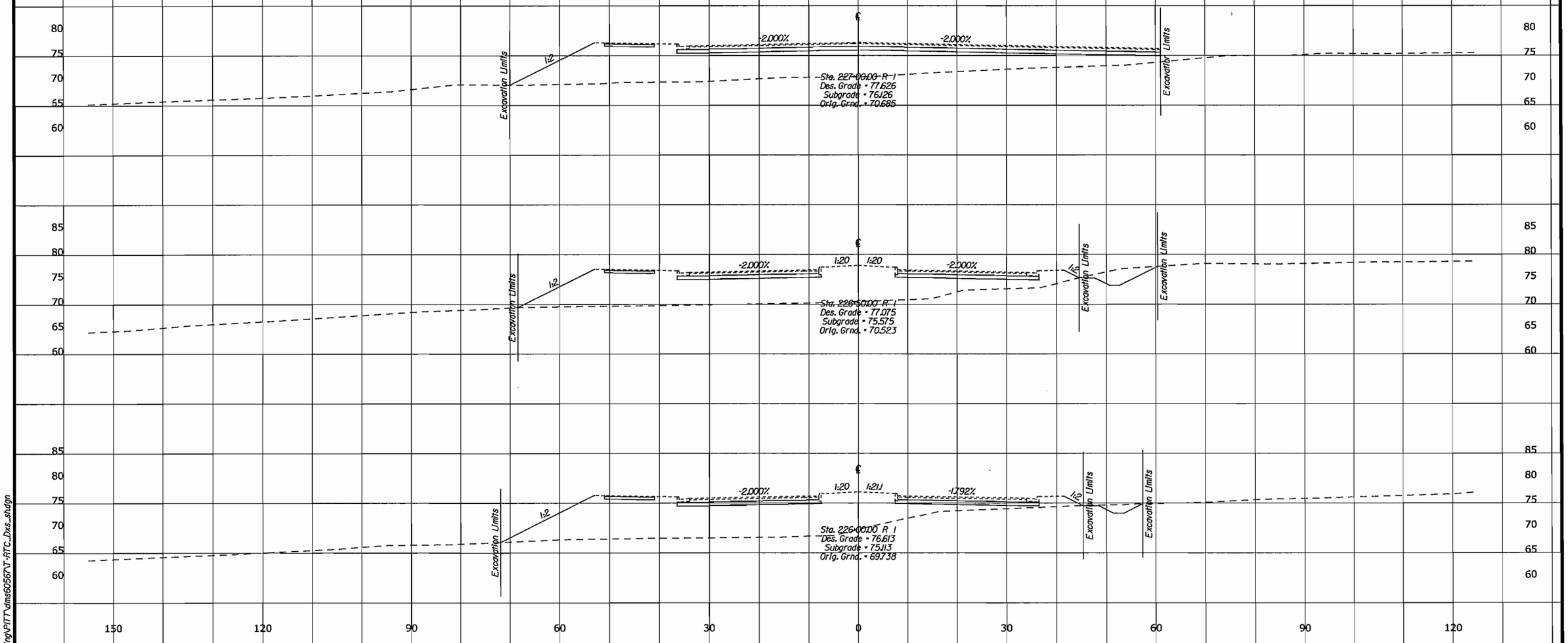

U.S. DEPARTMENT OF TRANSPORTATION
FEDERAL HIGHWAY ADMINISTRATION
EASTERN FEDERAL LANDS HIGHWAY DIVISION
STERLING, VIRGINIA

FORT BELVOIR - MULLIGAN ROAD

CROSS SECTIONS

MULLIGAN ROAD

226+00.00 TO 227+00.00

6/10/2008 10:16:56 AM C:\PWworking\PITT\dms50567\T-RTC_Dxs_shdgn

REG	STATE	PROJECT	SHEET NO.
-	VA	VA-A-AD-48(1)	T65

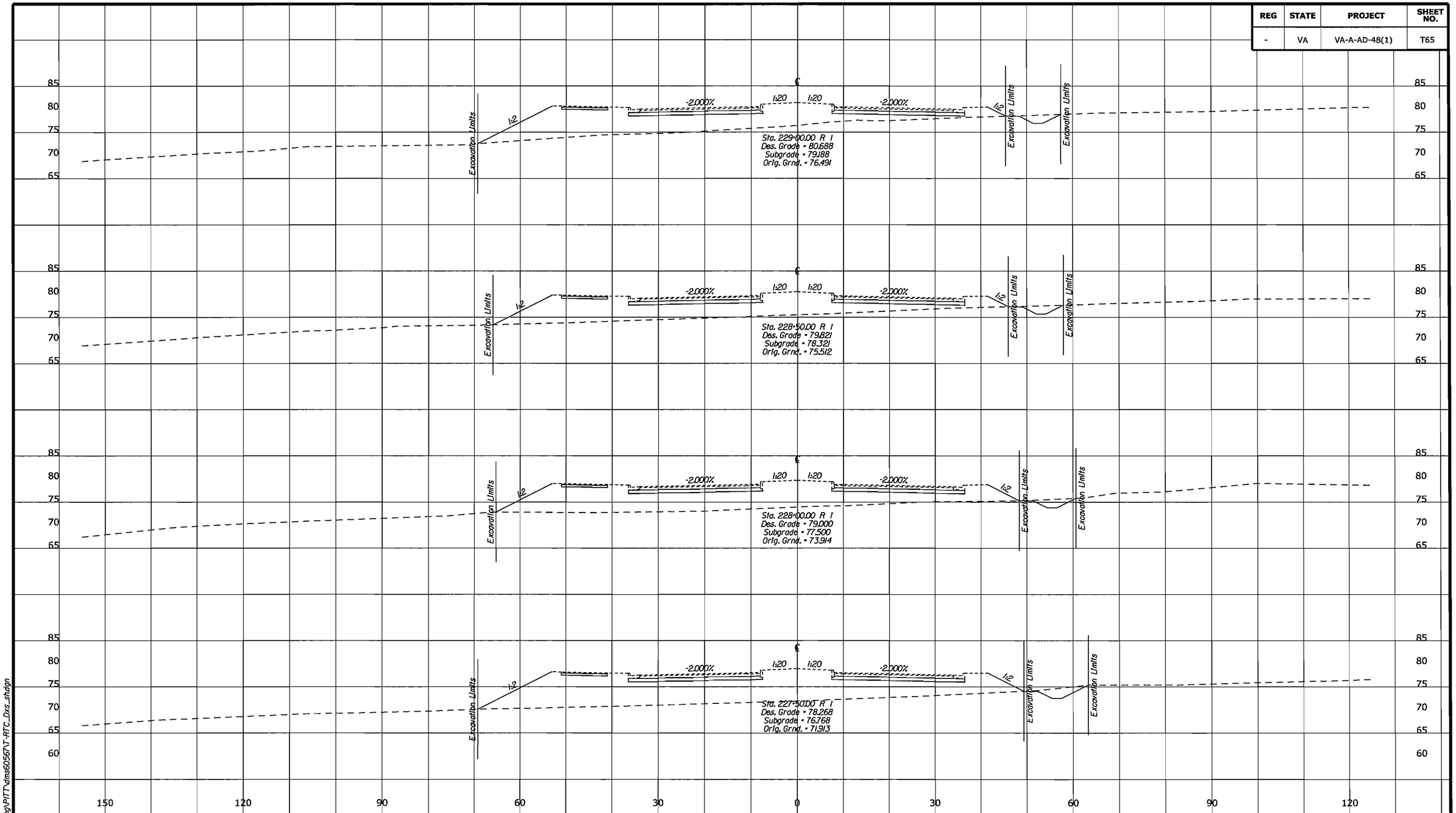

U.S. DEPARTMENT OF TRANSPORTATION
FEDERAL HIGHWAY ADMINISTRATION
EASTERN FEDERAL LANDS HIGHWAY DIVISION
STERLING, VIRGINIA

FORT BELVOIR - MULLIGAN ROAD

CROSS SECTIONS

MULLIGAN ROAD

227+50.00 TO 229+00.00

6/10/2008 10:16:56 AM:\PWworking\PITT\dms6056\T-RTC_Dxs_shdgn

REG	STATE	PROJECT	SHEET NO.
-	VA	VA-A-AD-48(1)	T66

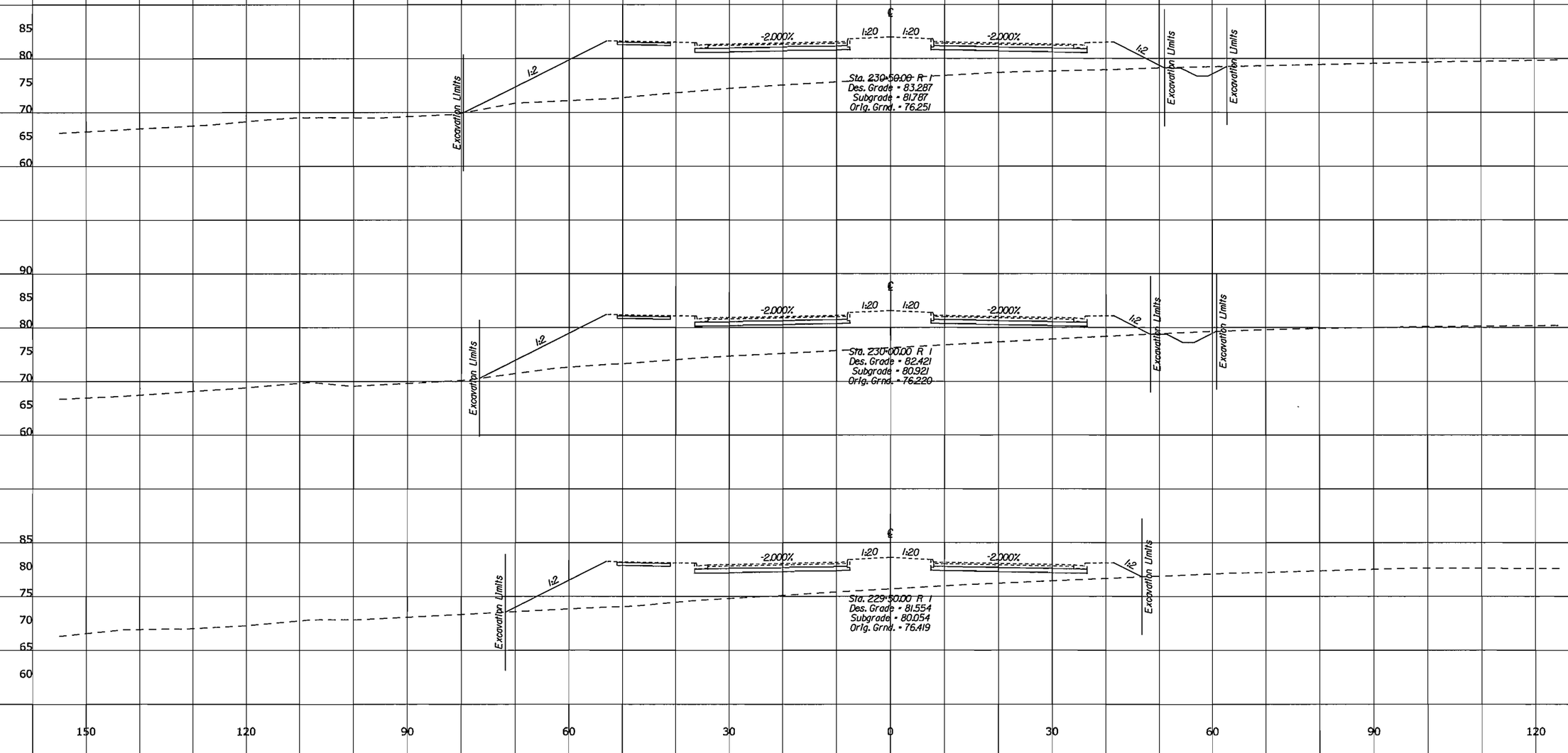

U.S. DEPARTMENT OF TRANSPORTATION
FEDERAL HIGHWAY ADMINISTRATION
EASTERN FEDERAL LANDS HIGHWAY DIVISION
STERLING, VIRGINIA

FORT BELVOIR - MULLIGAN ROAD

CROSS SECTIONS

MULLIGAN ROAD

229+50.00 TO 230+50.00

6/10/2008 10:16:56 AM:\PWworking\PITT\dms60567\T-RTC_Dxs_shdgn

REG	STATE	PROJECT	SHEET NO.
-	VA	VA-A-AD-48(1)	T67

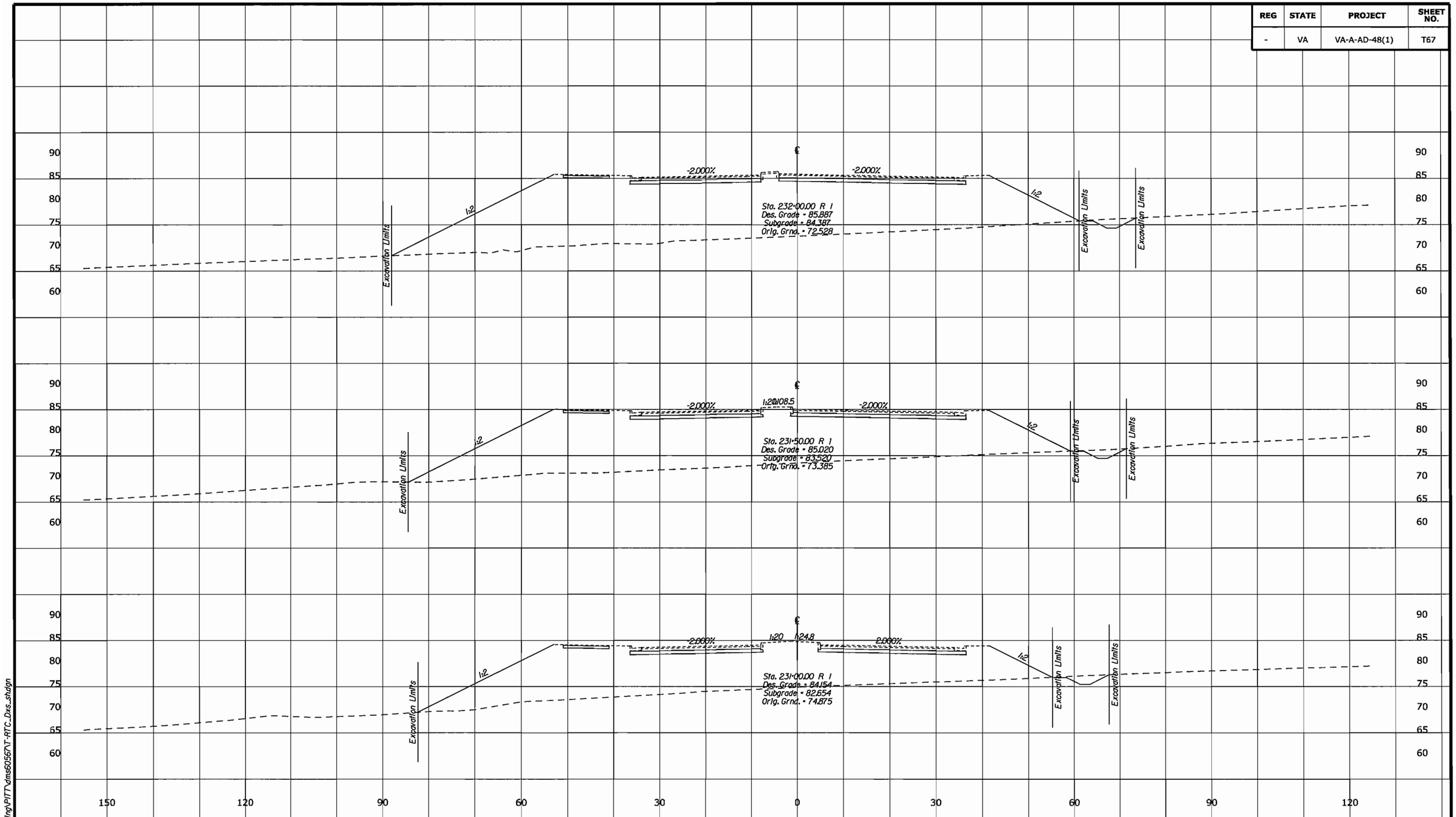

U.S. DEPARTMENT OF TRANSPORTATION
FEDERAL HIGHWAY ADMINISTRATION
EASTERN FEDERAL LANDS HIGHWAY DIVISION
STERLING, VIRGINIA

FORT BELVOIR - MULLIGAN ROAD

CROSS SECTIONS

MULLIGAN ROAD

231+00.00 TO 232+00.00

6/10/2008 10:16:56 AM C:\PWworking\PITT\dms60567\T-RTC_Dxs_sh.dgn

REG	STATE	PROJECT	SHEET NO.
-	VA	VA-A-AD-48(1)	T68

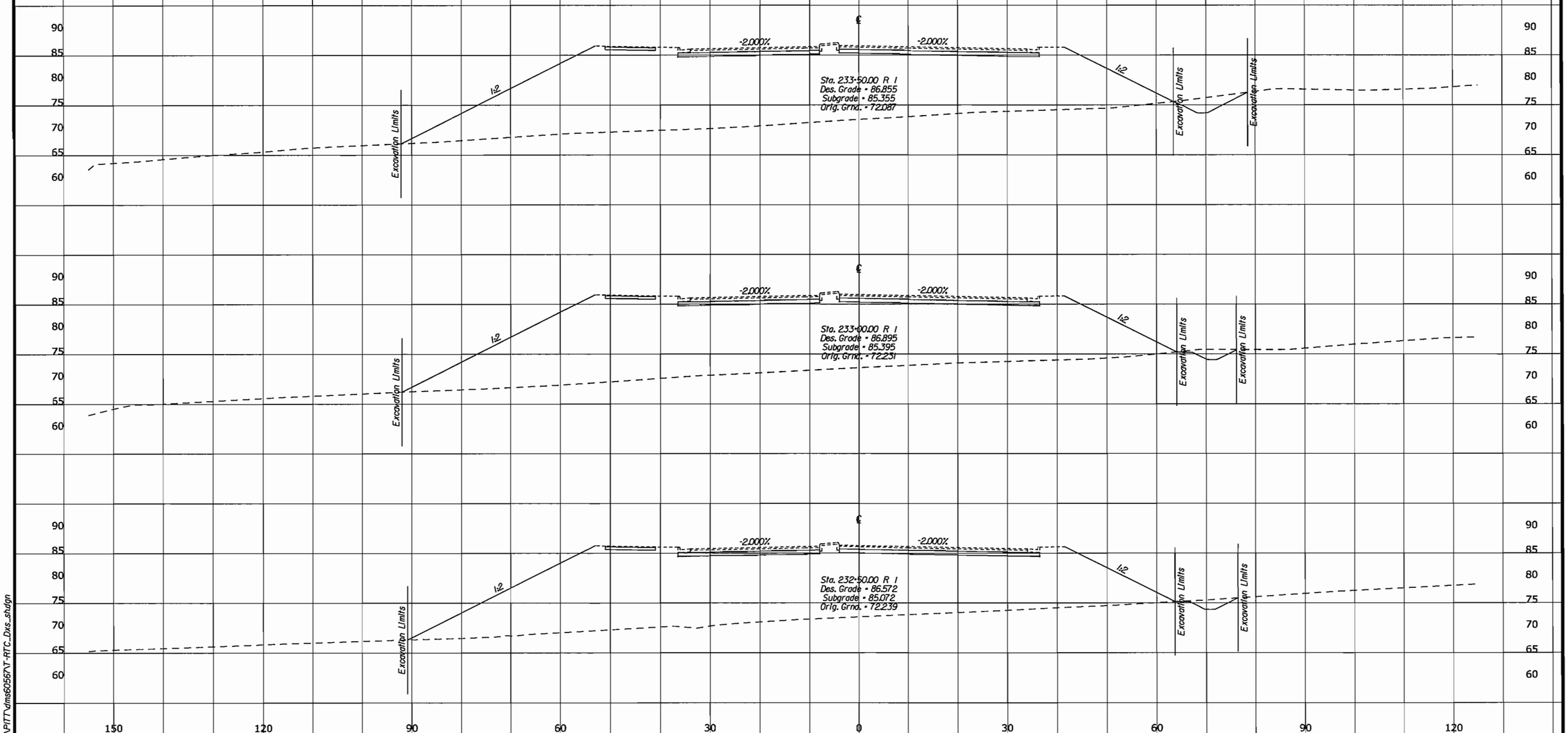

U.S. DEPARTMENT OF TRANSPORTATION
FEDERAL HIGHWAY ADMINISTRATION
EASTERN FEDERAL LANDS HIGHWAY DIVISION
STERLING, VIRGINIA

FORT BELVOIR - MULLIGAN ROAD

CROSS SECTIONS

MULLIGAN ROAD

232+50.00 TO 233+50.00

6/10/2008 10:6:56 AM:\VPWworking\PITT\dms60567\T-RTC_Dxs_shdgn

REG	STATE	PROJECT	SHEET NO.
-	VA	VA-A-AD-48(1)	T69

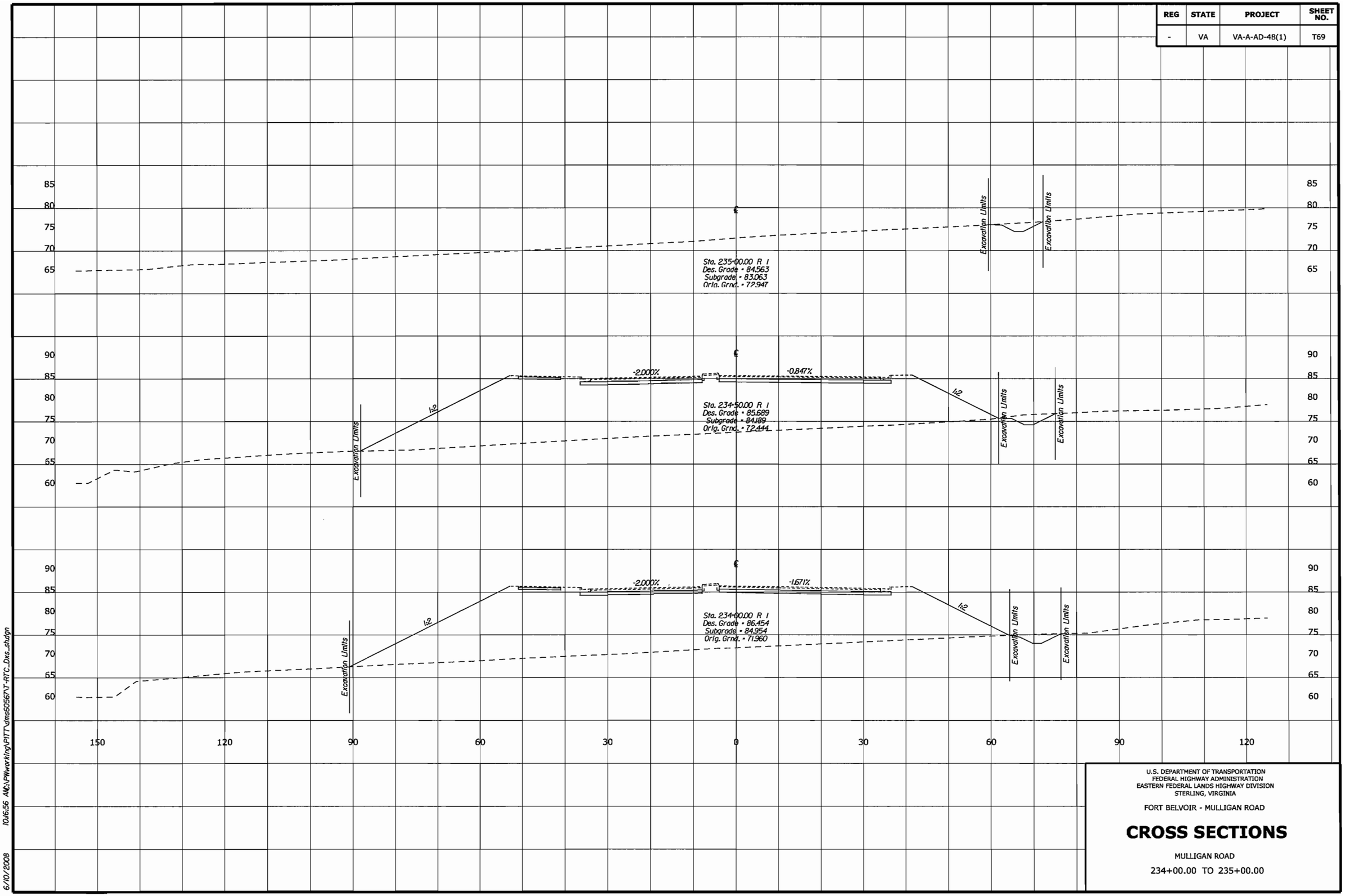

U.S. DEPARTMENT OF TRANSPORTATION
FEDERAL HIGHWAY ADMINISTRATION
EASTERN FEDERAL LANDS HIGHWAY DIVISION
STERLING, VIRGINIA

FORT BELVOIR - MULLIGAN ROAD

CROSS SECTIONS

MULLIGAN ROAD

234+00.00 TO 235+00.00

6/10/2008 10:16:56 AM:\PWworking\PITT\dms5056\T-RTC_Dxs_shdgn

REG	STATE	PROJECT	SHEET NO.
-	VA	VA-A-AD-48(1)	T70

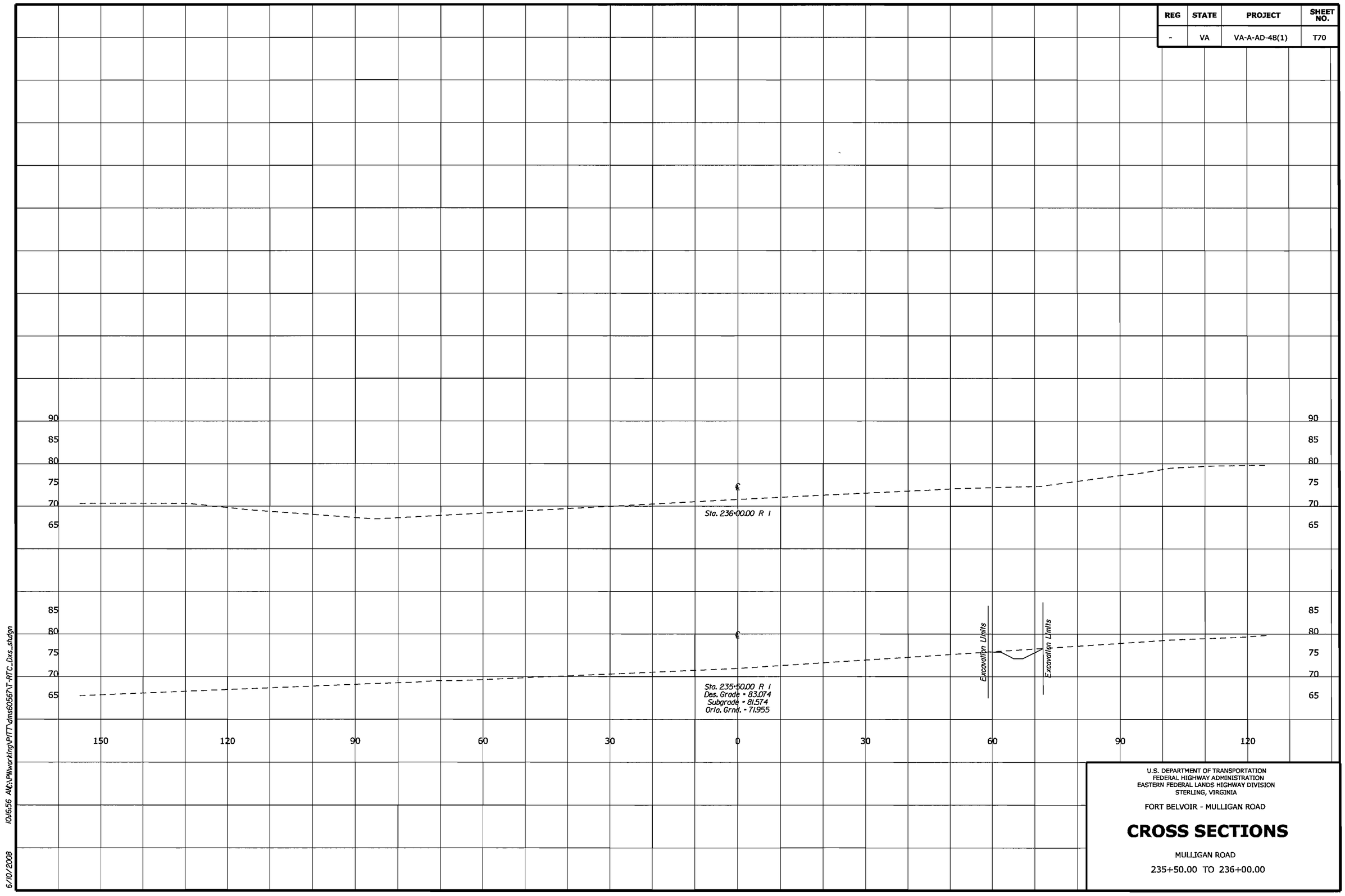

U.S. DEPARTMENT OF TRANSPORTATION
FEDERAL HIGHWAY ADMINISTRATION
EASTERN FEDERAL LANDS HIGHWAY DIVISION
STERLING, VIRGINIA

FORT BELVOIR - MULLIGAN ROAD

CROSS SECTIONS

MULLIGAN ROAD

235+50.00 TO 236+00.00

6/10/2008 10:46:56 AM:\PWworking\PITT\dms60567\T-RTC_Dxs_sh.dgn