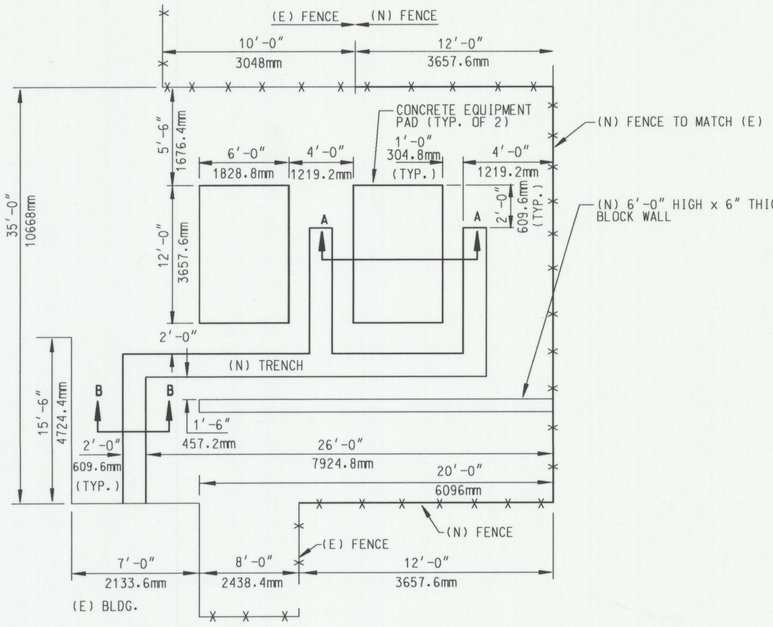

EQUIPMENT PAD & TRENCH PLAN

NTS

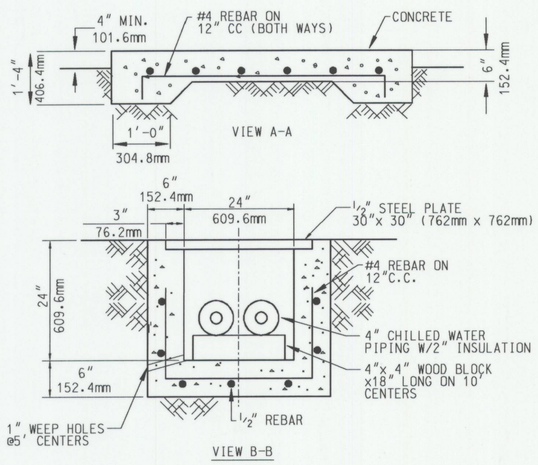

TRENCH DETAIL

NTS

GENERAL NOTE:

1. CONTRACTOR SHALL INSTALL R-30 INSULATION ON UNDERSIDE OF ROOF AREA APPROX. 30,000 SQ. FT. EVENTUAL TOTAL.
2. PHASES 1,2, & 3 SHOWN.PHASE 4 IS REMAINDER OF BUILDING.

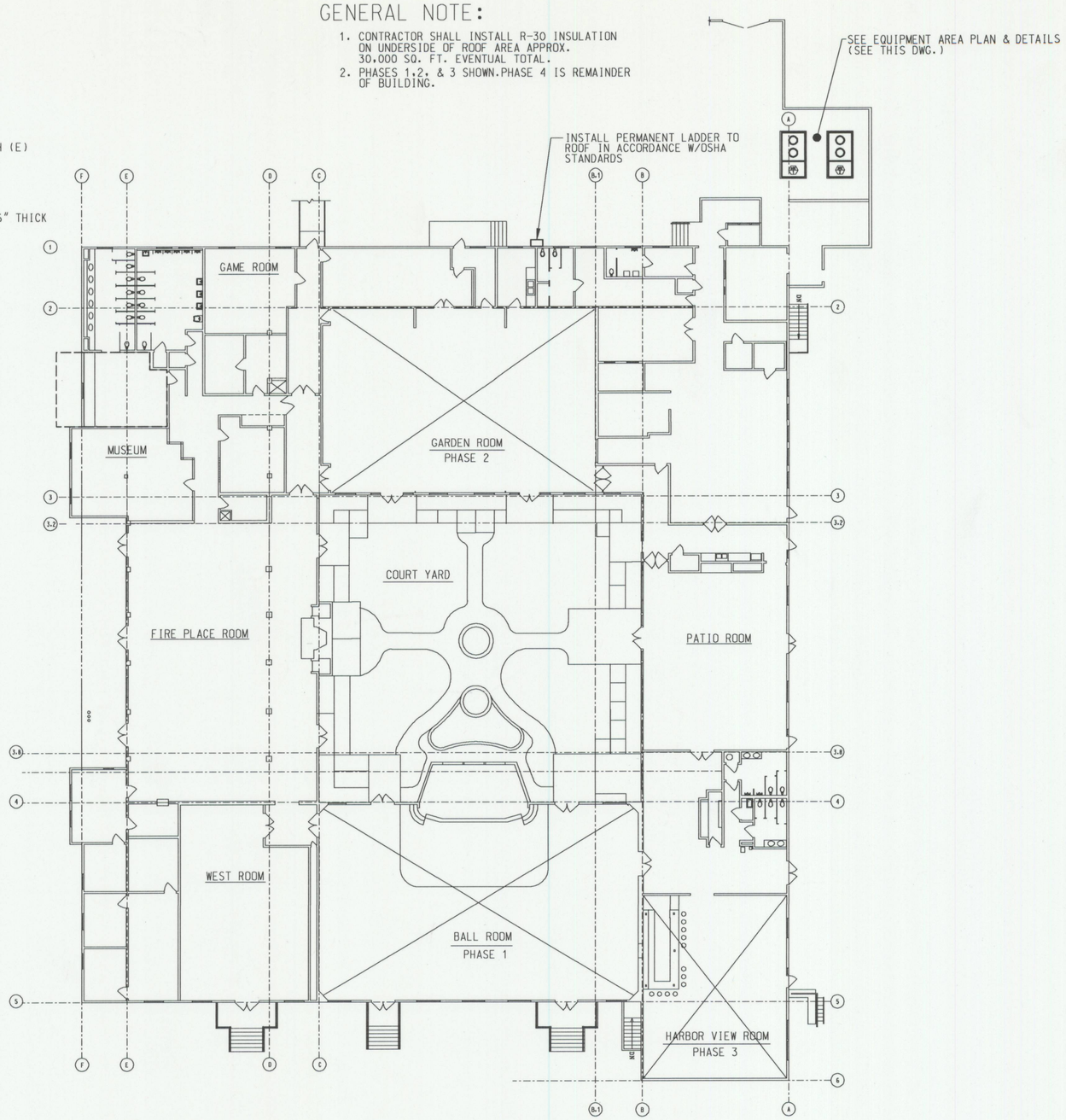

FLOOR PLAN

SCALE: 1/16"=1'-0"

REV. NO.	DATE	DESCRIPTION	AGENCY	BY

APPROVED	PROJECT MANAGER	DATE
	SECURITY	DATE
COORDINATED	ENVIRONMENTAL	DATE
	SAFETY DIVISION	DATE
	CHIEF FIRE PROTECTION	DATE
	COMMUNICATIONS ENGINEER	DATE
	BEE/ENVIRONMENTAL ENGINEER	DATE
	CHIEF OPERATION & MAINTENANCE	DATE

APPROVED	USING AGENCY	DATE
	BASE CIVIL ENGINEER	DATE
	CONTRACT MGT.	DATE
DESIGNED BY	JOHN WILLIAMS	6/15/97 DATE
DRAWN BY	BILL WHORLEY	6/15/97 DATE
CHECKED BY	JOHN WILLIAMS	6/15/97 DATE
SUBMITTED BY	JOHN HOLLAND	6/15/97 DATE

JOB No. 10-50104-18B

MERIT ENGINEERING, INC.
129 SOUTH SAN FERNANDO BLVD.
BURBANK, CA 91502
(818) 842-2928 FAX (818) 842-1419

LICENSED ARCHITECT RONALD R. MARSHALL No. C-7598 STATE OF CALIFORNIA

UNITED STATES AIR FORCE

61 AIR BASE GROUP (ABG)
LOS ANGELES AIR FORCE BASE

PROJECT TITLE:
BLDG 403 HVAC (PHASE 4)
COMMUNITY CENTER
FORT MacARTHUR

SHEET TITLE:
FLOOR PLAN

DRAWING NO.
HHEK - 95-0019

DATE: 6/15/97

SCALE: AS NOTED

A-1

SHEET: 2 OF 16