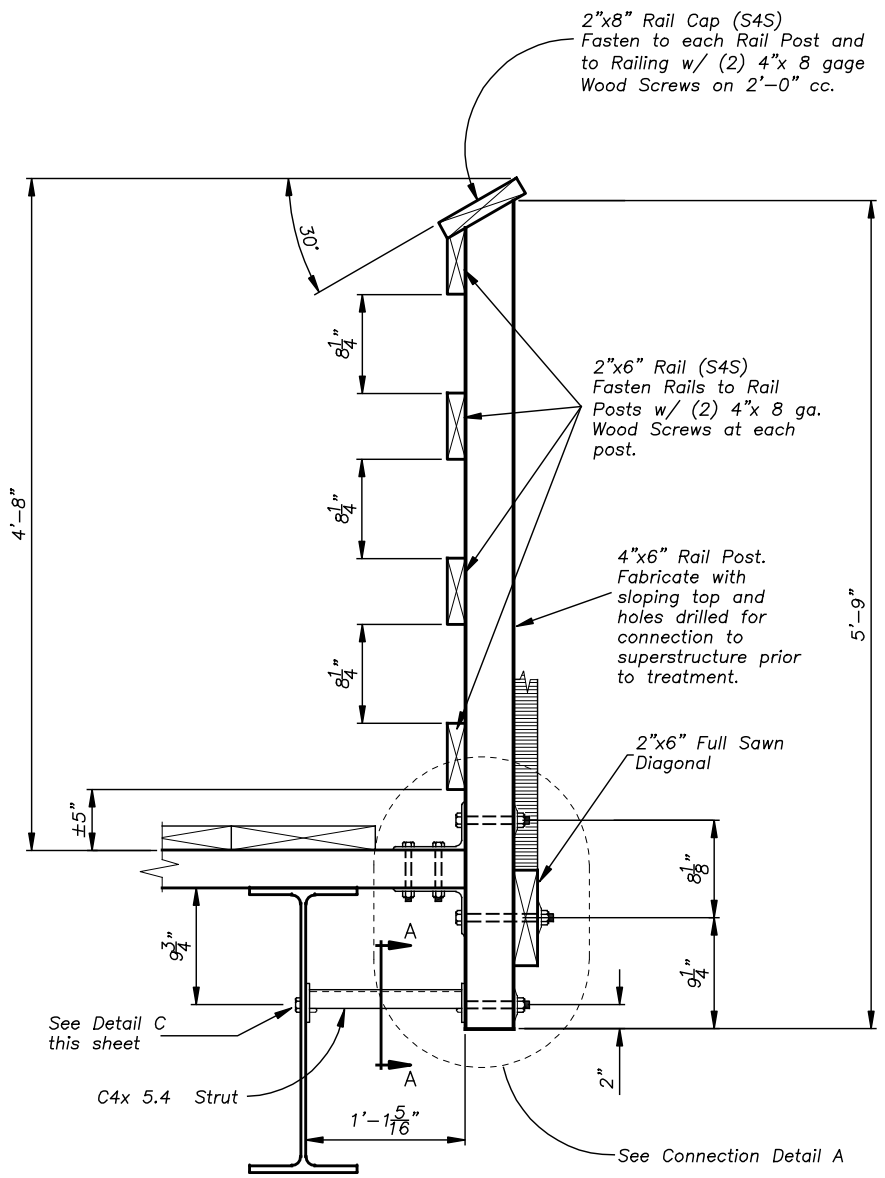

TYPICAL RAIL DETAIL

Not to Scale

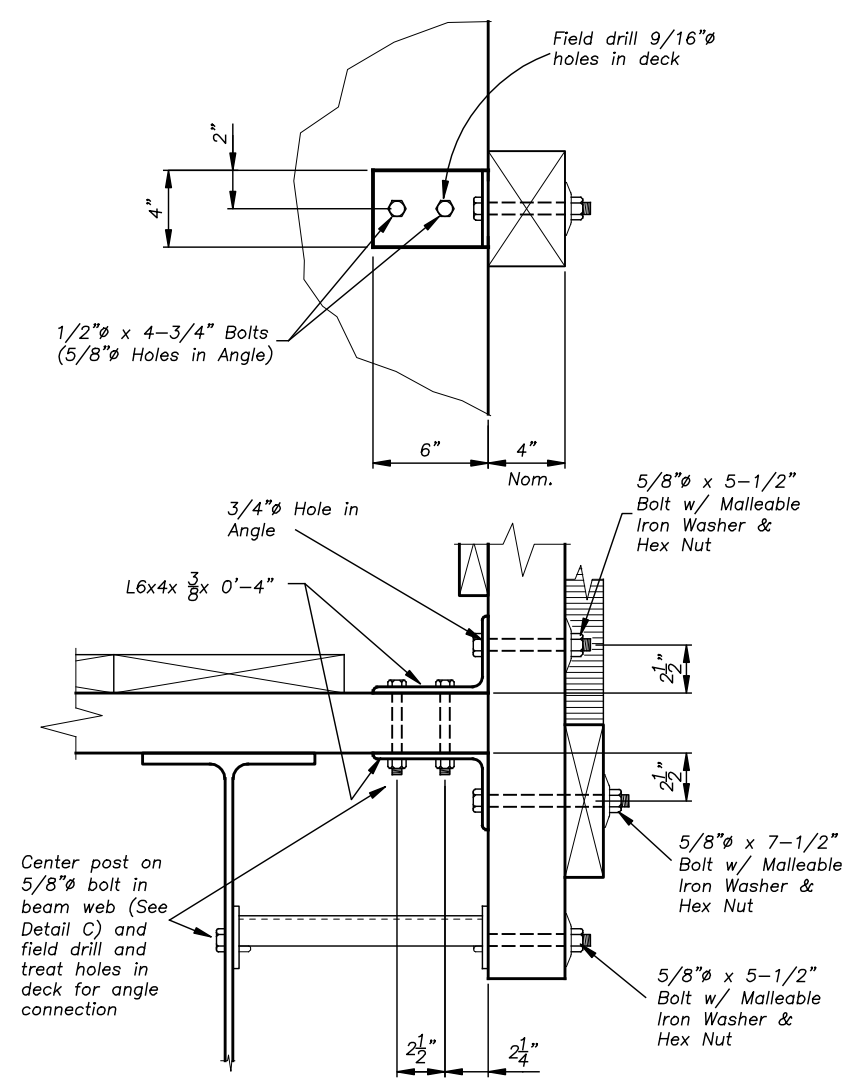

DETAIL A- TYPICAL POST CONNECTION

Not to Scale

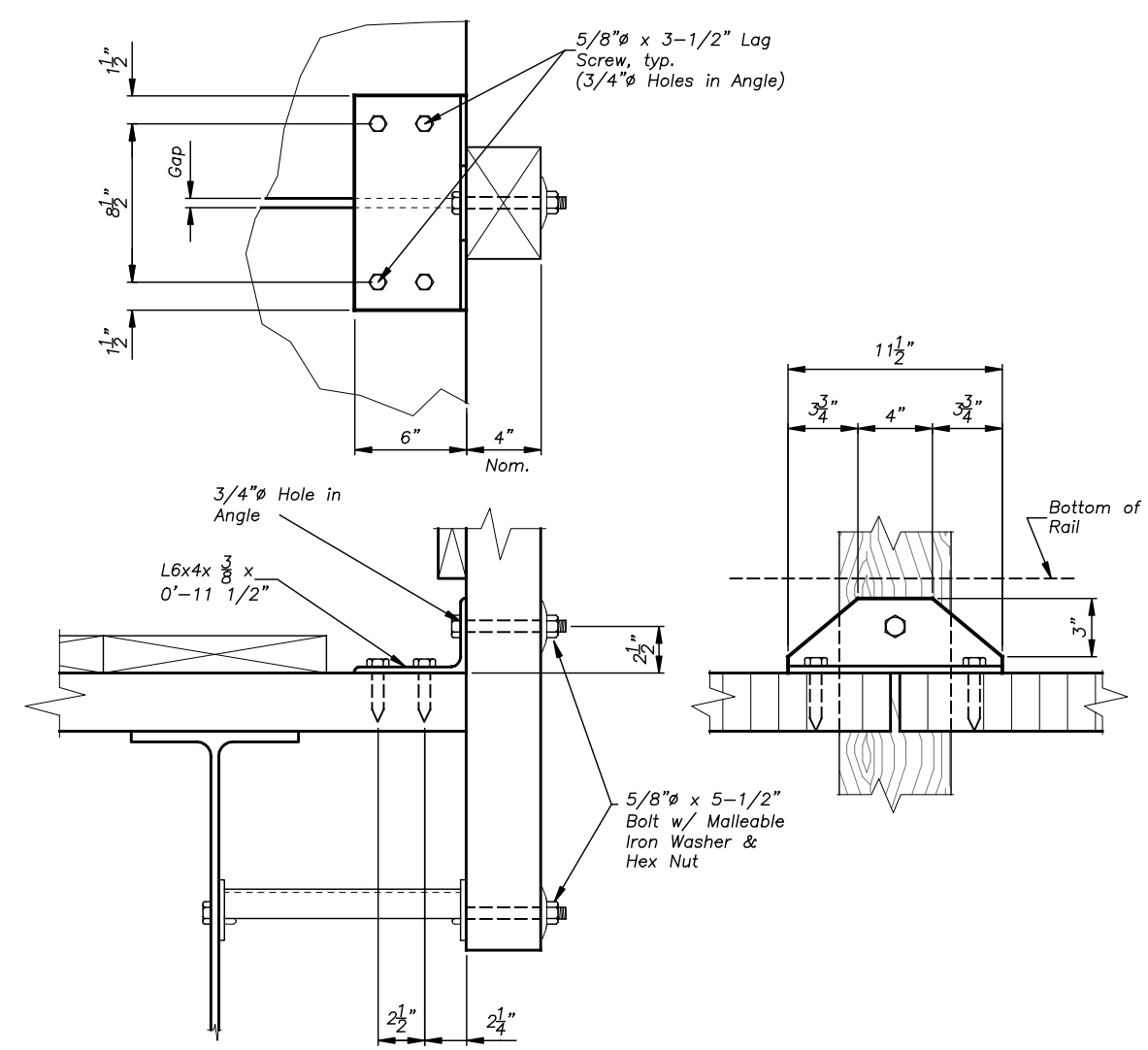

DETAIL B- POST CONNECTION AT MIDSPAN

Not to Scale

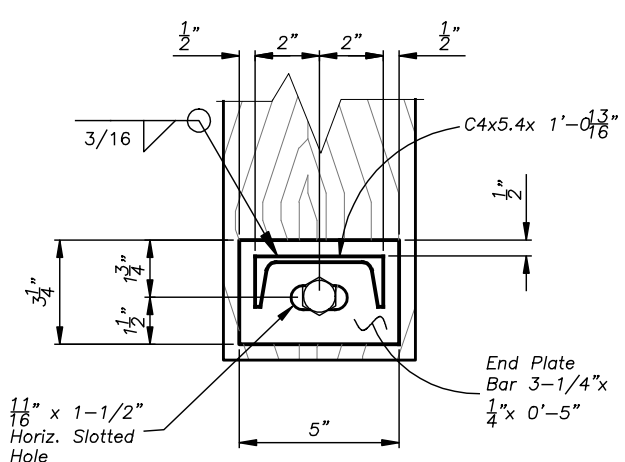

SECTION A-A

Not to Scale

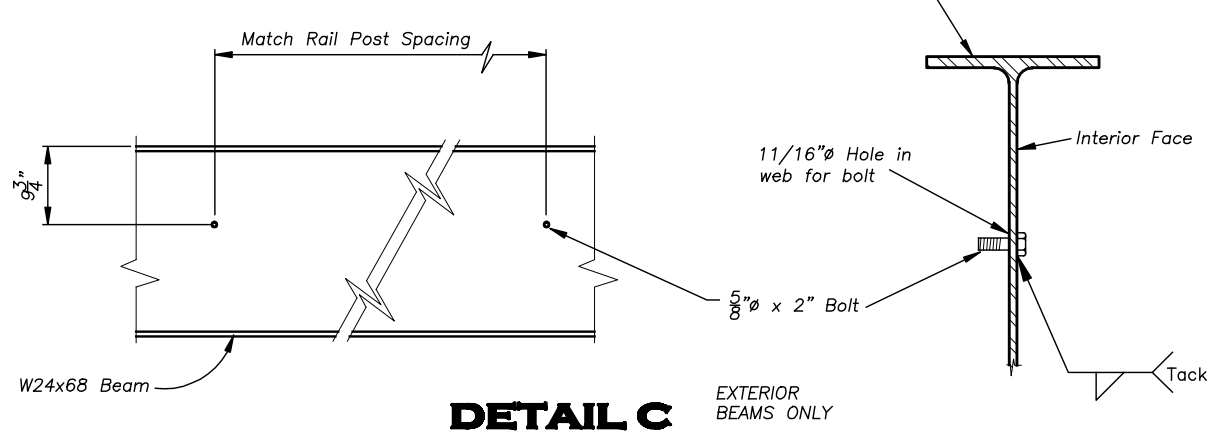

EXTERIOR BEAMS ONLY

DETAIL C

Not to Scale

NOTE: ALL STEEL SHAPES AND BARS ASSOCIATED WITH THE BRIDGE RAIL CONNECTION MAY BE ASTM A36.

BY	DATE	REVISION DESCRIPTION

DESIGN	CT	PROJ. NO.	5282
DRAWN	MTJ	DATE	DEC., 2007
CHECKED	MJ	SURVEYED	DJ&A

DJ&A, P.C.
CONSULTING ENGINEERS LAND SURVEYORS

USFS - CLEARWATER N.F.
COLT CREEK CABIN TRAIL
BRIDGE REPLACEMENT

BRIDGE RAIL DETAILS

SHEET 14 OF 14