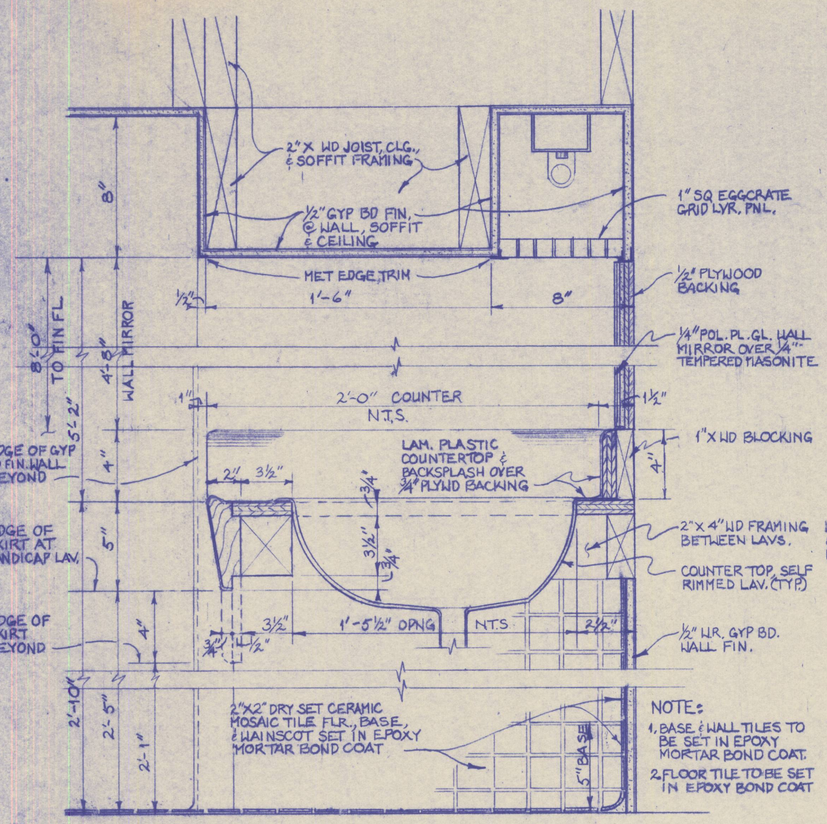

1 (A-7/A-9 | A-16) **COUNTER AT WOMEN/MEN TOILETS**
SCALE: 3" 1'-0"

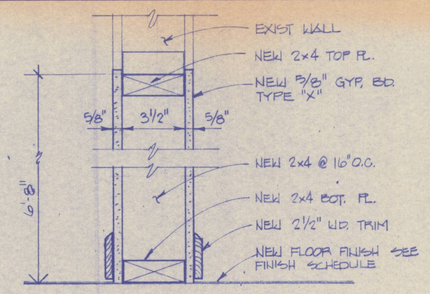

9 (A-3, A-4, A-5 | A-16) **DOOR ENCLOSURE DETAIL**
SCALE: 3" 1'-0"

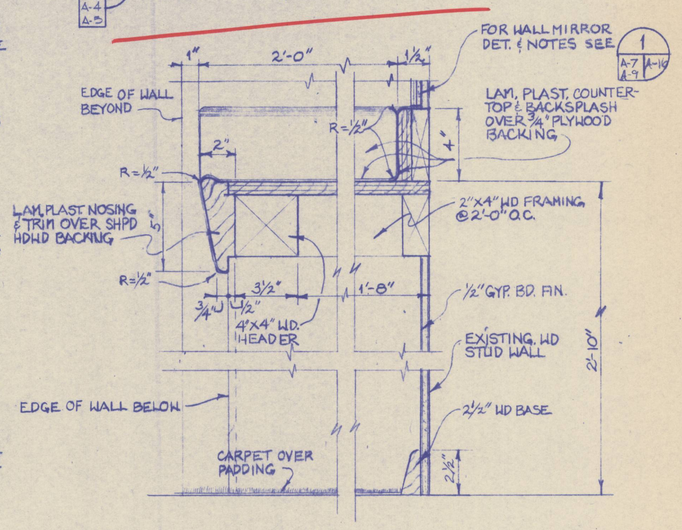

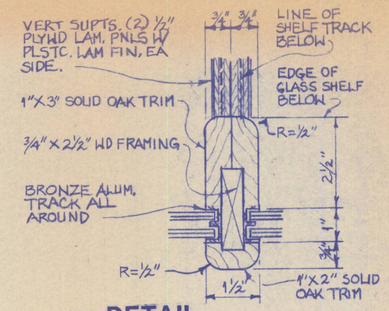

A **DETAIL**
1/2 FULL SCALE

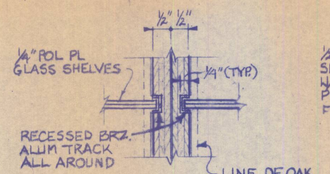

B **DETAIL**
1/2 FULL SCALE

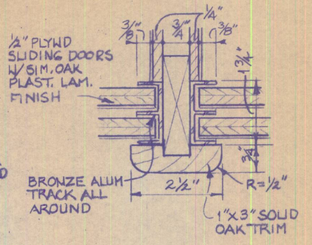

C **DETAIL**
1/2 FULL SCALE

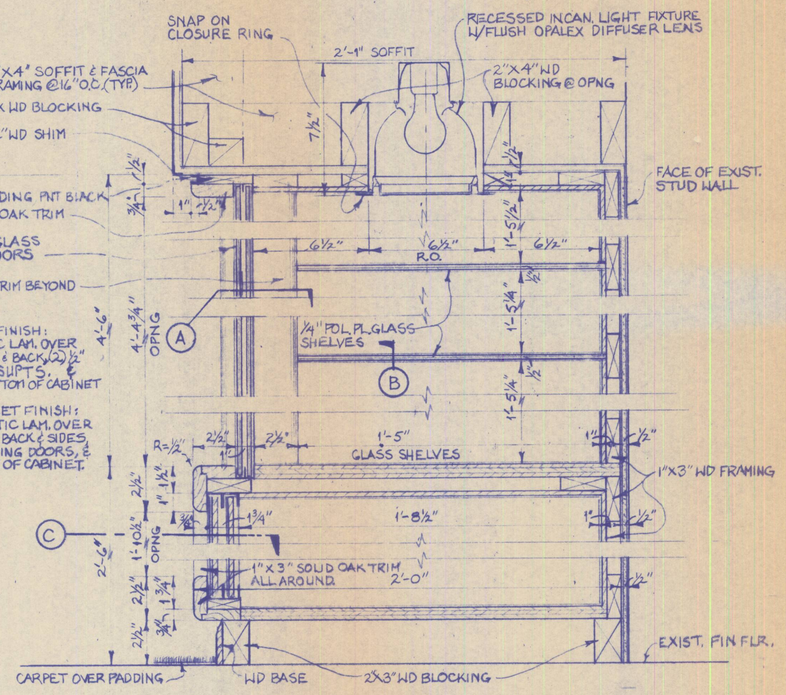

7 (A-3 | A-9) **DISPLAY/STORAGE CAB. AT MUSEUM**
SCALE: 3" 1'-0"

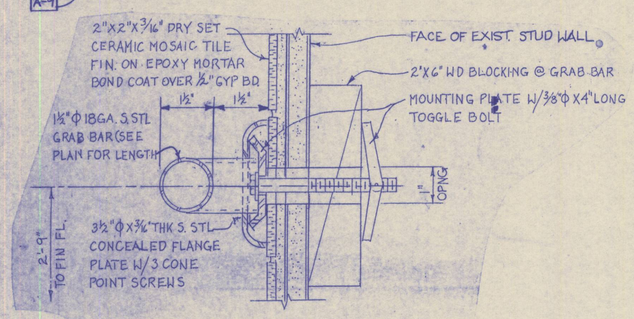

2 (A-7/A-9 | A-16) **GRAB BAR SUPPORT DETAIL**
1/2 FULL SCALE

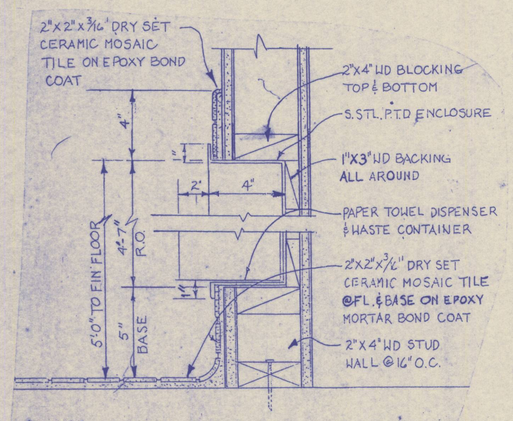

3 (A-7/A-9 | A-16) **WALL SECTION AT P.T.D.**
SCALE: 3" 1'-0"

5 (A-9 | A-16) **COUNTER AT POWDER ROOM**
SCALE: 3" 1'-0"

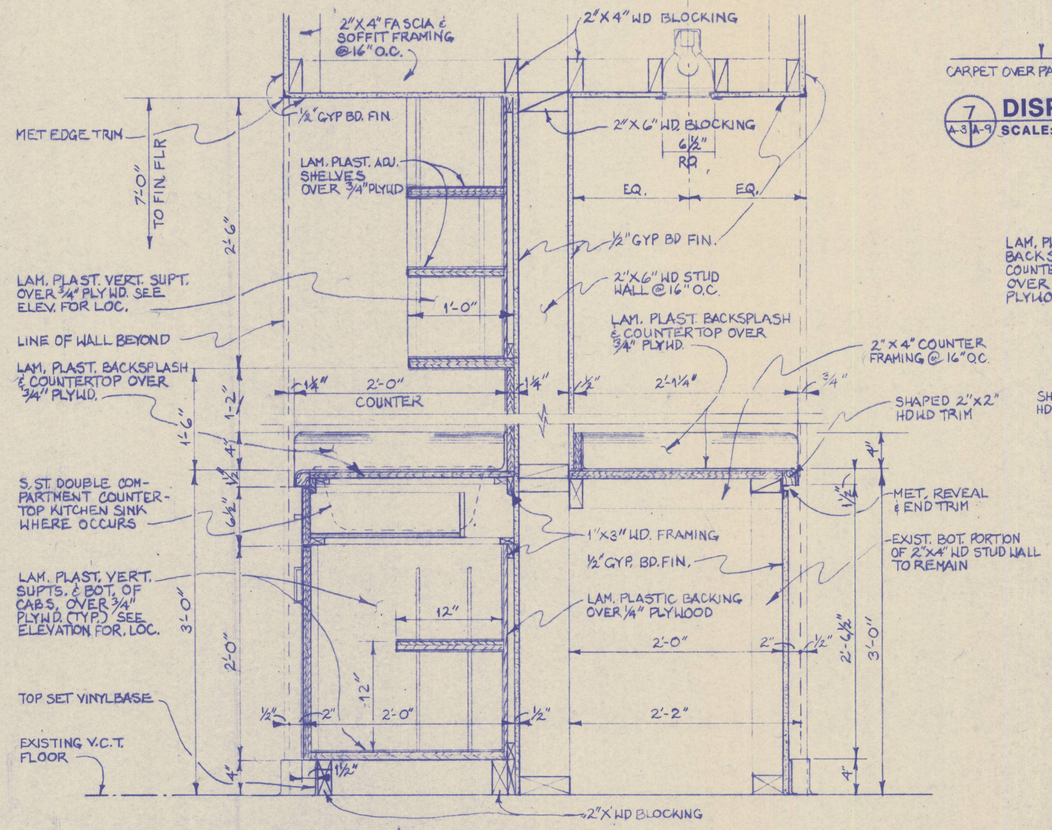

6 (A-4/A-8 | A-16) **COUNTERS AT PATIO RM & SERVING AREA**
SCALE: 1-1/2" 1'-0"

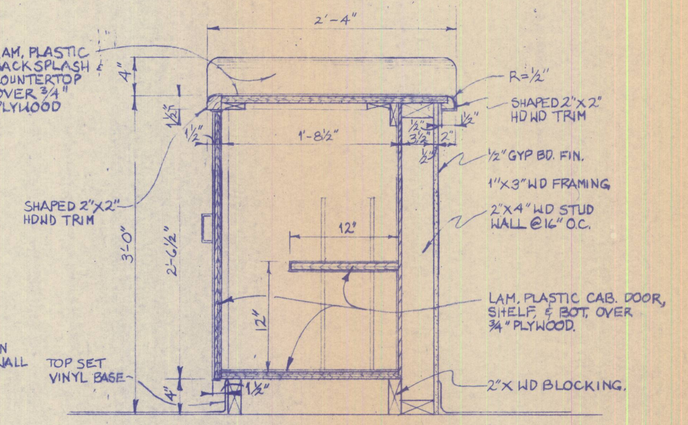

8 (A-5/A-16) **COUNTER AT SNACK BAR**
SCALE: 1-1/2" 1'-0"

GRAPHIC SCALE
1 1/2" : 1'-0" — 12" 9" 6" 3" 0" 1'
3" : 1'-0" — 1" 0 3" 6" 9" 12"
HALF SCALE — 1" 1/2" 0 1" 2" 3" 4" 5"

COORDINATED: MANAGER ENGINEER — DATE; SECURITY — DATE; SAFETY DIVISION — DATE; CHIEF FIRE PROTECTION — DATE; COMMUNICATIONS ENGINEER — DATE; ENVIRONMENTAL ENGINEER — DATE

APPROVED: USING AGENCY — DATE; BASE CIVIL ENGINEER — DATE

REVISION NO.	DATE	DESCRIPTION	AGENCY	BY

Pan Am World Services, Inc.

UNITED STATES AIR FORCE
HQ 6592g SUPPORT GROUP (AFSC)
LOS ANGELES AIR FORCE BASE

DESIGNED BY: U.A.
DRAWN BY: S.B.
CHECKED BY: U.A.
SUBMITTED BY — DATE

RENOVATE BUILDING 403 COMMUNITY CENTER
LAO 89-1028
FORT MacARTHUR, CALIFORNIA
LOS ANGELES AIR FORCE BASE

DETAILS

SPECIFICATION NO. 6592 / DE 9010289
DATE 10/16/89
SCALE NOTED
DRAWING NUMBER 00403-5010289 (ATCH. 3)
A-16
SHEET 22 OF 48