ELECTRICAL LEGEND

- FLUORESCENT LIGHTING FIXTURE
- FLUORESCENT LIGHTING FIXTURE WITH EMERGENCY UNIT BATTERY PACK
- HID LIGHTING FIXTURE
- EXIT LIGHT
- $ SINGLE POLE LIGHTING SWITCH MOUNT 48" AFF
- $3 THREE-WAY LIGHTING SWITCH
- $4 FOUR-WAY LIGHTING SWITCH
- $OS FLUSH WALL OCCUPANCY SENSOR SWITCH MOUNTED 48" AFF
- DUPLEX RECEPTACLE MOUNT 18" AFF UNLESS NOTED OTHERWISE
- GROUND FAULT CIRCUIT INTERRUPTER RECEPTACLE MOUNTING HEIGHT AS NOTED
- GFC,WP GROUND FAULT CIRCUIT INTERRUPTER RECEPTACLE WITH WEATHERPROOF COVERPLATE
- QUADRAPLEX RECEPTACLE
- SPECIAL OUTLET FOR FORKLIFT CHARGER. VERIFY TYPE REQUIRED WITH CONTRACTING OFFICER
- SPECIAL OUTLET FOR LAN EQUIPMENT. SEE PLAN
- NON-FUSED DISCONNECT SWITCH
- PANELBOARD
- J JUNCTION BOX
- EF EXHAUST FAN
- DDC TELEPHONE/DATA OUTLET FOR DDC SYSTEM. ROUTE 2-CAT 6 CABLES TO COMM ROOM
- TELEPHONE/DATA OUTLET WITH 2-TELE JACKS AND 2 DATA JACKS. ROUTE 4-CAT 6 CABLES TO COMM ROOM. MOUNT 18" AFF UNLESS NOTED OTHERWISE
- TELEPHONE WALL OUTLET WITH 1-TELE JACK. ROUTE 1-CAT 6 CABLE TO COMM ROOM
- WP WEATHERPROOF TELE WALL OUTLET WITH 1-TELE JACK. RUN 1-CAT 6 CABLE TO COMM ROOM
- F FIRE ALARM SYSTEM PULL STATION MOUNT 48" AFF
- FIRE ALARM AREA SMOKE DETECTOR
- FS SPRINKLER SYSTEM FLOW SWITCH
- TS SPRINKLER SYSTEM TAMPER SWITCH
- WP SPRINKLER ALARM BELL (ACTIVATED BY WATER FLOW) PART OF FIRE ALARM SYSTEM
- F/M FIRE ALARM/MASS NOTIFICATION SPEAKER FLUSH IN CEILING WITH 1-CLEAR STROBE AND 1-AMBER STROBE
- F/M FIRE ALARM/MASS NOTIFICATION INTERIOR WALL MOUNTED SPEAKER WITH 1-CLEAR STROBE AND 1-AMBER STROBE. MOUNT 80" AFF
- F/M/WP FIRE ALARM/MASS NOTIFICATION SYSTEM EXTERIOR WALL MOUNTED SPEAKER
- D FIRE ALARM DUCT SMOKE DETECTOR MOUNTED IN SUPPLY AIR DUCT
- C FIRE ALARM CONTROL MODULE. CONNECT TO AHU CONTROLS FOR FAN SHUT DOWN
- CONDUIT RUN UNDERGROUND OR BELOW SLAB
- CONDUIT RUN CONCEALED ABOVE CEILING OR IN WALLS
- HOMERUN TO PANELBOARD ANY CIRCUIT WITHOUT FURTHER DESIGNATION 2#12, 1#12 GRD, 1/2"C, 3#12, 1#12 GRD, 1/2"C ETC.
- LOC MASS NOTIFICATION SYSTEM LOCAL OPERATING CONSOLE
- NUP NEW UNDERGROUND PRIMARY
- EUP EXISTING UNDERGROUND PRIMARY
- NUC NEW UNDERGROUND COMMUNICATIONS (2-4"C)

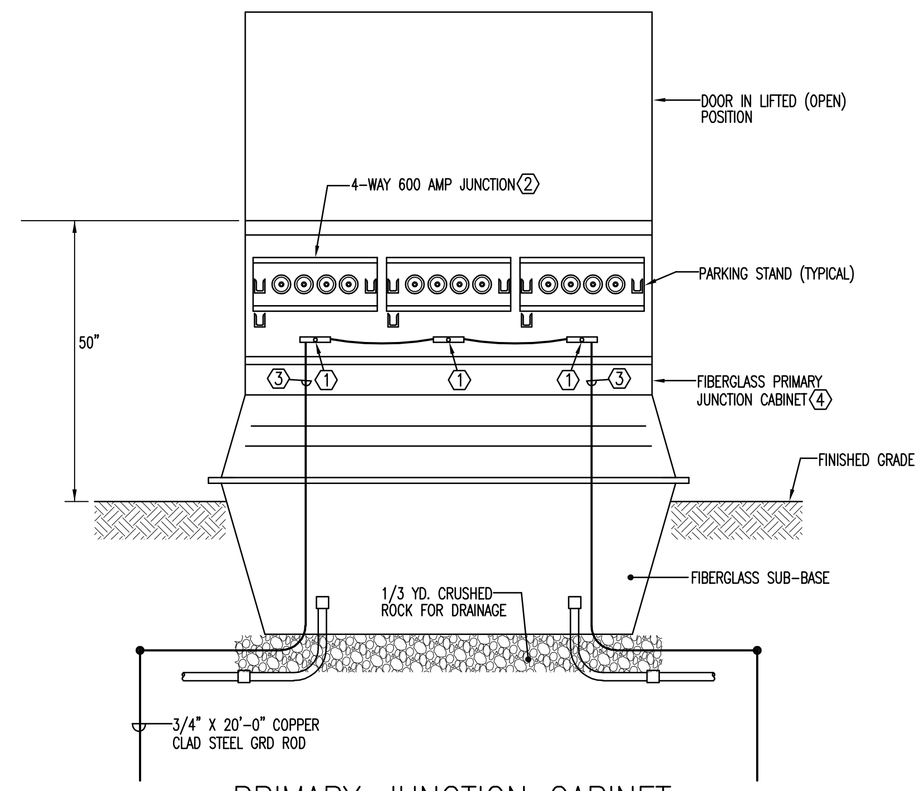

PRIMARY JUNCTION CABINET DETAIL (INTERIOR VIEW)

NOT TO SCALE

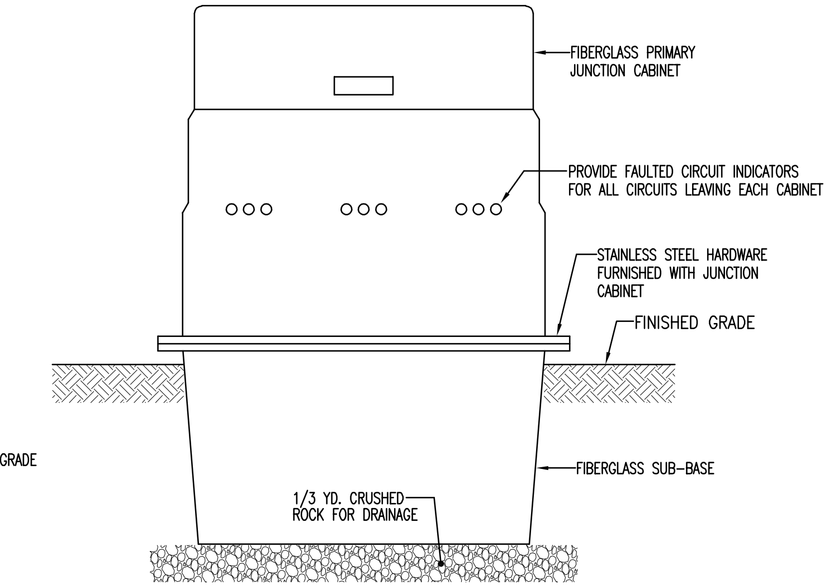

PRIMARY JUNCTION CABINET DETAIL (EXTERIOR VIEW)

NOT TO SCALE

NOTE: PROVIDE RED ADHESIVE SIGN WITH LETTERS "DANGER HIGH VOLTAGE". SIGN SHALL BE 12"W X 8"H AND SHALL BE EQUAL TO BRADY #84876.

NOTES

- PROVIDE CABLE MOUNTED FAULT INDICATORS FOR EACH CABLE (COOPER STAR SERIES OR EQUAL) WITH INDICATOR LIGHTS MOUNTED FLUSH IN FACE OF JUNCTION CABINET
- CABLES SHALL BE CONNECTED BY DEADBREAK CONNECTORS AND WALL MOUNTED DEADBREAK JUNCTION SYSTEMS

KEY NOTES

1. PROVIDE GROUND BUS ASSEMBLY AT EACH GROUND NUT. CONNECT ALL NEUTRALS TO INDIVIDUAL LUGS ON GRD BUS. INTERCONNECT GRD BUSSES WITH #4/0 MIN. GROUND CONDUCTOR. ALL GROUND CONNECTIONS SHALL BE BRAZED OR EXOTHERMICALLY WELDED.
2. 4-WAY JUNCTION IS REQUIRED AT ALL INSTALLATIONS
3. 4/0 GRD TO 3/4" X 20'-0" GRD (2-REQUIRED FOR EACH JUNCTION CABINET)
4. BASIS OF DESIGN POWER DESIGN INC. CJP SERIES

GENERAL NOTES (APPLIES TO ALL DRAWINGS)

1. IT IS THE CONTRACTOR'S RESPONSIBILITY TO DETERMINE THE EXACT LOCATION AND DEPTH OF EXISTING UTILITIES AND TO DETERMINE IF OTHER UTILITIES WILL BE ENCOUNTERED DURING THE COURSE OF THE WORK AND TAKE WHATEVER STEPS NECESSARY TO PROVIDE FOR THEIR PROTECTION.
2. CONTRACTOR SHALL SOD GRASS AREAS DISTURBED BY CONSTRUCTION ACTIVITY. NOTE THAT ALL NON-PAVED AREAS ARE TO BE SODDED.
3. WHERE SOD IS BEING INSTALLED, TOPSOIL SHALL BE USED AS A BASE AT LEAST SIX INCHES DEEP.
4. PROVIDE FAULTED CIRCUIT INDICATORS ON ALL CABLES ENTERING AND LEAVING EACH SWITCH AND PRIMARY JUNCTION CABINET. FAULTED CIRCUIT INDICATORS SHALL CONSIST OF THREE (3) SINGLE PHASE SENSORS THAT PLUG INTO SEPARABLE ELBOWS AND ONE (1) REMOTE DISPLAY WITH 6'-0" CORDS CONNECTING DISPLAY TO SENSORS. REMOTE DISPLAYS SHALL BE MOUNTED SO THEY ARE VISIBLE FROM THE EXTERIOR OF THE SWITCH OR TERMINAL CABINET. SENSORS SHALL AUTOMATICALLY RESET, UPON RESTORATION OF VOLTAGE ON THE PRIMARY CONDUCTORS. FURNISH A MOUNTING KIT FOR THE REMOTE DISPLAY FROM THE MANUFACTURER OF THE FAULTED CIRCUIT INDICATORS. REMOTE DISPLAY SHALL INDICATE WHICH PHASE HAS TRIPPED. CONTRACTOR SHALL COORDINATE WITH HURLBURT CIVIL ENGINEERING DEPARTMENT WHERE INDICATORS WILL BE MOUNTED ON TERMINAL CABINETS AND AIR SWITCHES PRIOR TO INSTALLATION OF FAULTED CIRCUIT INDICATORS.
5. ALL GRID CONNECTIONS TO GROUND RODS TO UNDERGROUND LOOPS SHALL BE EXOTHERMICALLY WELDED.
6. EXISTING PAVING WHERE ENCOUNTERED SHALL BE BORED UNDER (VERIFY ALL LOCATIONS IN FIELD)
7. ALL NEW UNDERGROUND EQUIPMENT (PRIMARY JUNCTION CABINETS, TRANSFORMERS, ETC.) SHALL HAVE ID TAGS (BRASS OR STAINLESS STEEL) WITH ID NUMBERS AS DIRECTED BY BASE CIVIL ENGINER ELECTRICAL SHOP
8. WHERE NEW 600 AMP PRIMARY JUNCTION CABINET ARE INSTALLED AND EXISTING CABLE IS TO BE RECONNECTED NEW CABLE SHALL BE TERMINATED WITH NEW 600 AMP ELBOWS.
9. USE RED HDPE CONDUIT FOR ALL DIRECTIONAL BORING.
10. ALL MEDIUM VOLTAGE CABLES SHALL BE 15 KV, COPPER, TYPE "EPR" WITH 100% CONCENTRIC NEUTRAL AND 133%, 90 DEGREE C. INSULATION.
11. ALL NEW PRIMARY JUNCTION CABINETS AND PAD MOUNTED TRANSFORMER SHALL BE PROVIDED WITH NEW LABELS MECHANICALLY FASTENED TO THE EQUIPMENT OR HANDHOLE COVER
    - LABEL SHALL BE STAINLESS STEEL WITH ENGRAVED DESIGNATIONS (NOMINAL 3" X 4" WITH 1/4" HIGH LETTERS/NUMBERS)
    - LABELS SHALL INCLUDE GIS LOCATION (CONTRACTOR SHALL OBTAIN GIS INFORMATION) AND EQUIPMENT DESIGNATION. EQUIPMENT DESIGNATIONS (UP TO 16 CHARACTERS) SHALL BE AS SPECIFIED BY THE CONTRACTING OFFICER.
    - LABELS SHALL BE INSTALLED BOTH INSIDE AND OUTSIDE OF ALL CABINETS.

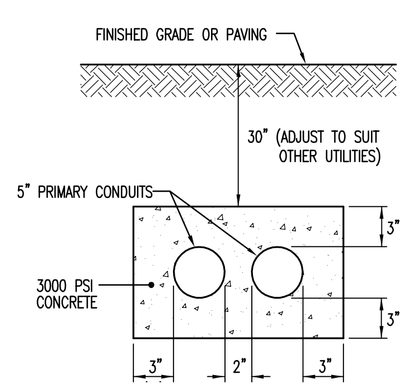

A E-5 E-1 TYPICAL SECTION THRU UNDERGROUND PRIMARY

NOT TO SCALE

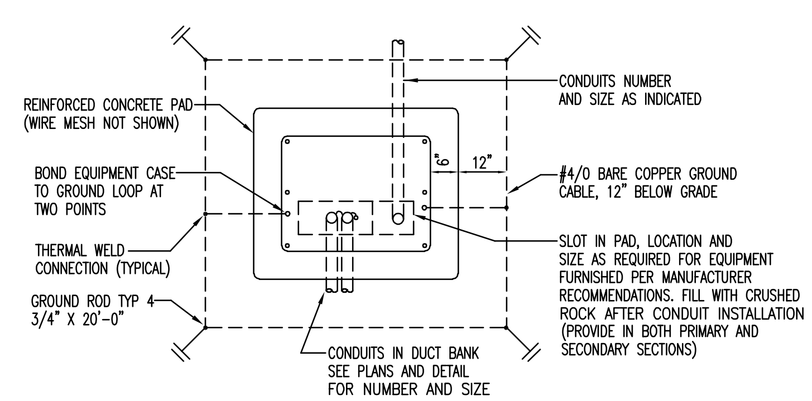

PAD MOUNTED TRANSFORMER DETAILS

NOT TO SCALE

NOTES: -ALL GROUND CONNECTIONS SHALL BE BRAZED OR EXOTHERMIC WELDED. GROUND RESISTANCE SHALL BE 0 OHMS OR LESS.

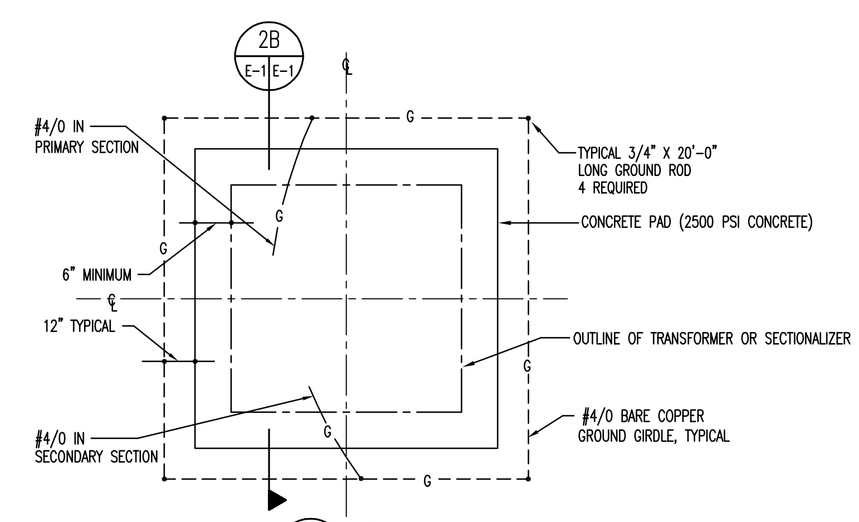

2A E-1 E-1 PLAN VIEW

NOT TO SCALE

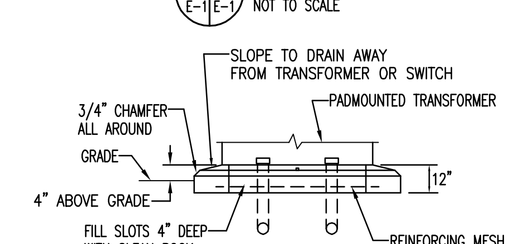

2B E-1 E-1 SECTION

NOT TO SCALE

REV #	DATE	DESCRIPTION	APP'D

APPROVED
CHIEF ENGINEER APPROVED
CIVIL ENGINEER

FTEV 05-1076 CONSTRUCT WAREHOUSE
1 SOCS

LEGEND, DETAILS

AIR FORCE SPECIAL OPERATIONS COMMAND
1 SPECIAL OPERATIONS
CIVIL ENGINEERING SQUADRON
HURLBURT FIELD, FLORIDA

DATE: 20 MAR. 2009
DESIGNED BY: KLOCKE
DRAWN BY: MLYNARCZYK
BUILDING NO.: .
PROJECT NO.: FTEV 05-1076
SHEET REF.: E-1
SHEET NO.: 22 OF 26