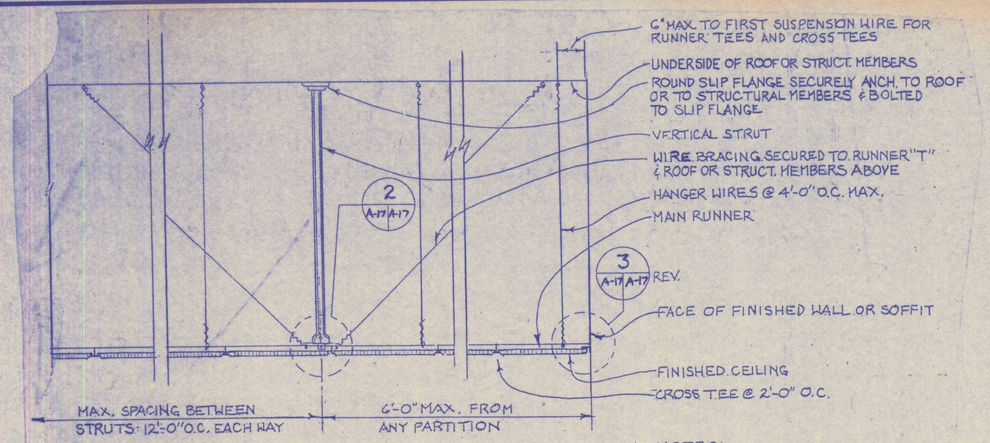

NOTES:

1. IN SPACES 12'-0" X 12'-0" OR LESS IN BOTH DIRECTIONS, ONLY ONE VERTICAL STRUT IS REQUIRED
2. ALL WIRE SHALL BE TAUT W/3 COMPLETE TURNS AROUND SELF

1 BRACING AT ACOUSTICAL TILE CEILING
A-13/A-17 SCALE: 3/4" = 1'-0"

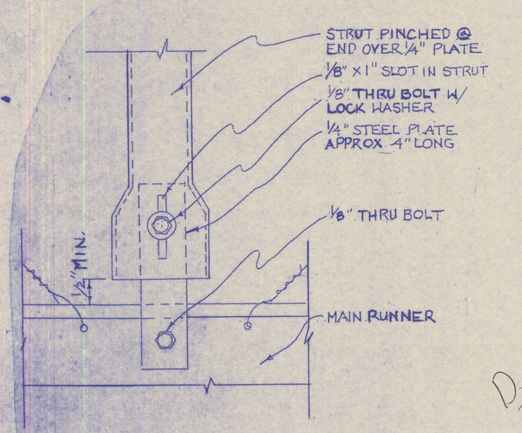

2 STRUT BRACING DETAIL
A-17/A-17 SCALE: 6" = 1'-0"

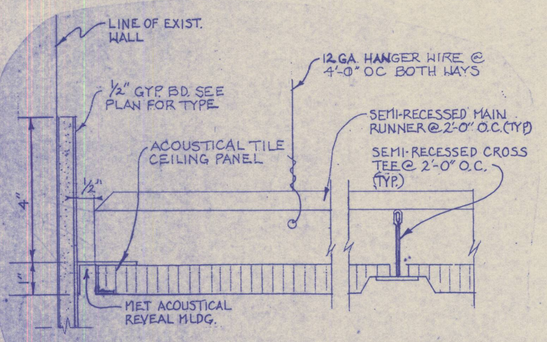

3 ACOUS. PERIM. MOULDING DET.
A-17/A-17 SCALE: 6" = 1'-0"

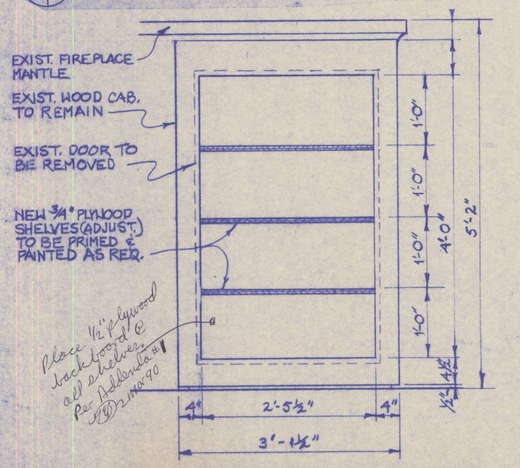

4 NEW SHELVES AT EXIST. FIREPLACE CAB.
A-8/A-17 SCALE: 1" = 1'-0"

A solid wood panel shall be installed beneath the bottom shelf of each bookcase in the Fireside Room. This panel should match the adjacent construction in style, finish etc. Shelves will require 1/2" plywood backboard.

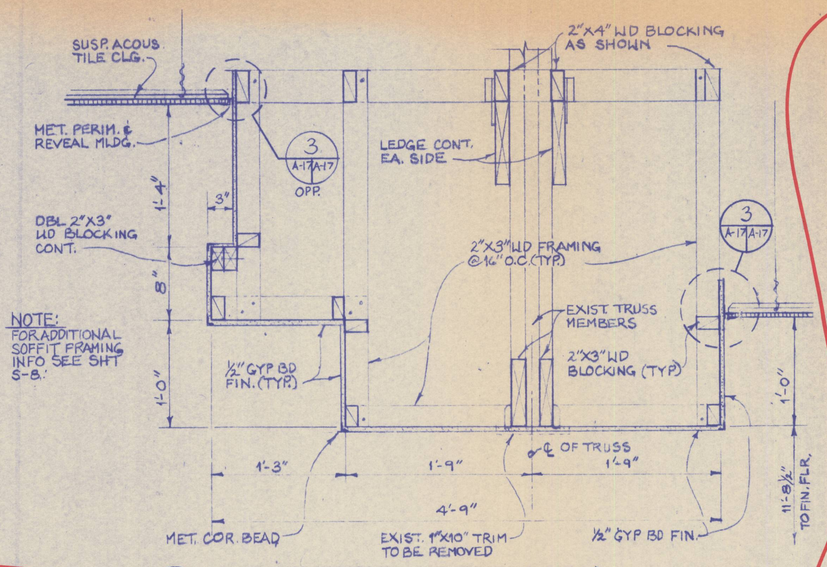

NOTE: FOR ADDITIONAL SOFFIT FRAMING INFO SEE SHT S-8.

9 SOFFIT DETAIL AT BALLROOM
A-13/A-17 SCALE: 1-1/2" = 1'-0"

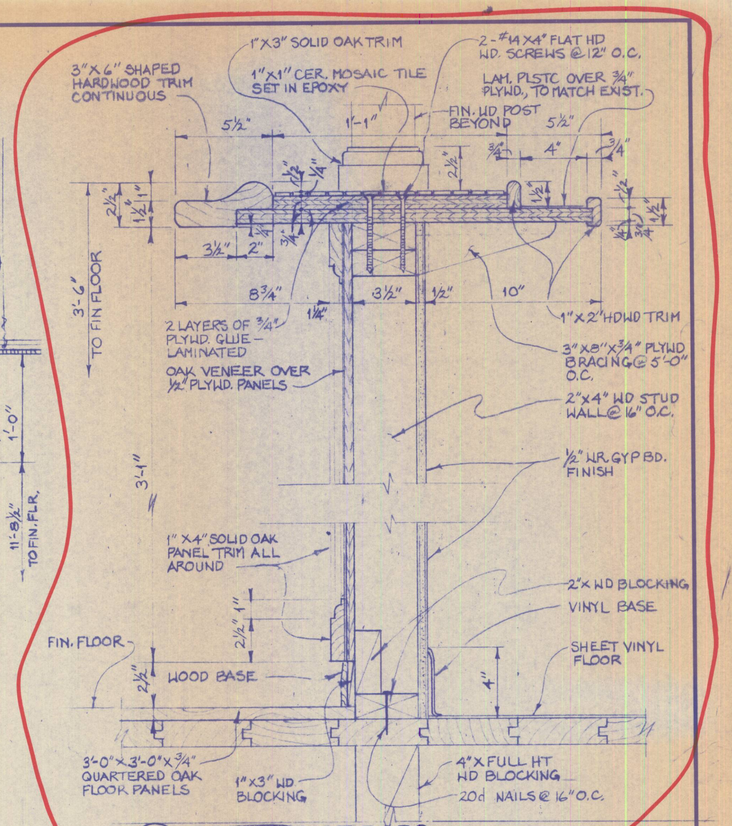

12 COUNTER AT BARS
A-5/A-17 SCALE: 3" = 1'-0"

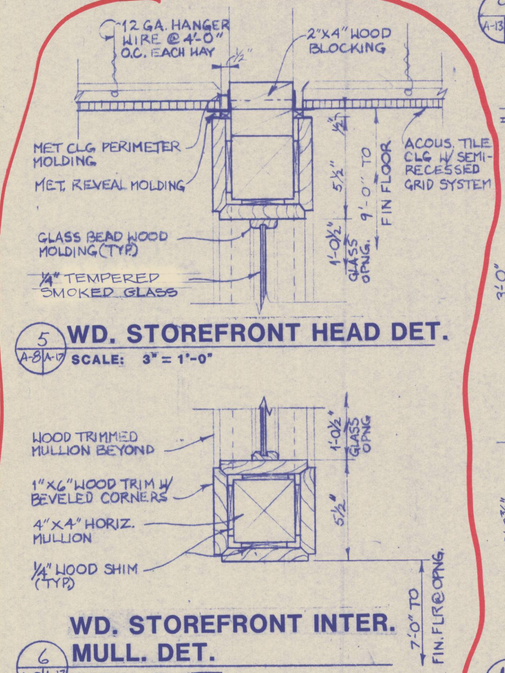

5 WD. STOREFRONT HEAD DET.
A-8/A-17 SCALE: 3" = 1'-0"

Deleted Per Addenda #1 2-MAR-90

6 WD. STOREFRONT INTER. MULL. DET.
A-8/A-17 SCALE: 3" = 1'-0"

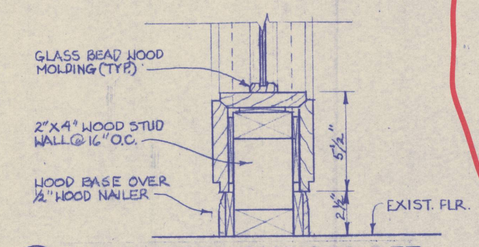

7 WD. STOREFRONT SILL DET.
A-8/A-17 SCALE: 3" = 1'-0"

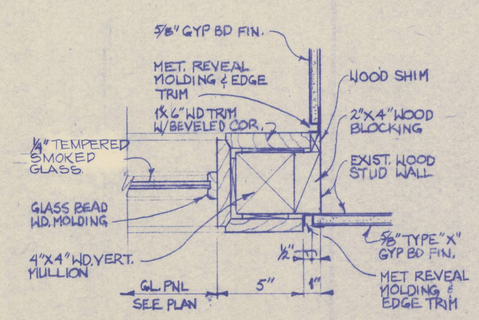

8 WD. STOREFRONT JAMB AT EXIST. WALL
A-8/A-17 SCALE: 3" = 1'-0"

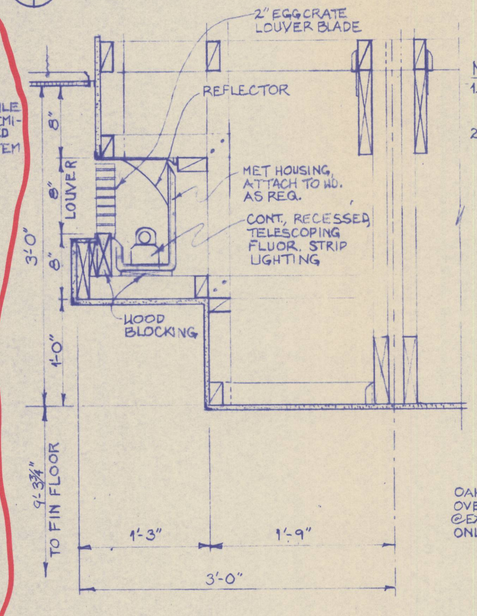

NOTES:

1. FOR REMAINING NOTES, SEE DET 9 SHT A17
2. FOR ADDITIONAL SOFFIT FRAMING INFO, SEE SHT S-9

10 SOFFIT DETAIL AT MULTI-PURPOSE ROOM
A-13/A-17 SCALE: 1-1/2" = 1'-0"

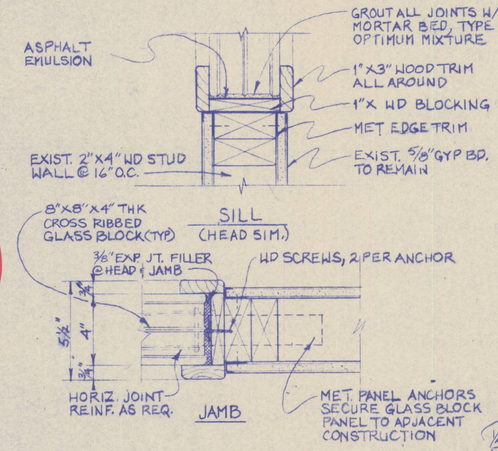

11 GLASS BLOCK DETAIL
A-8/A-17 SCALE: 3" 1'-0"

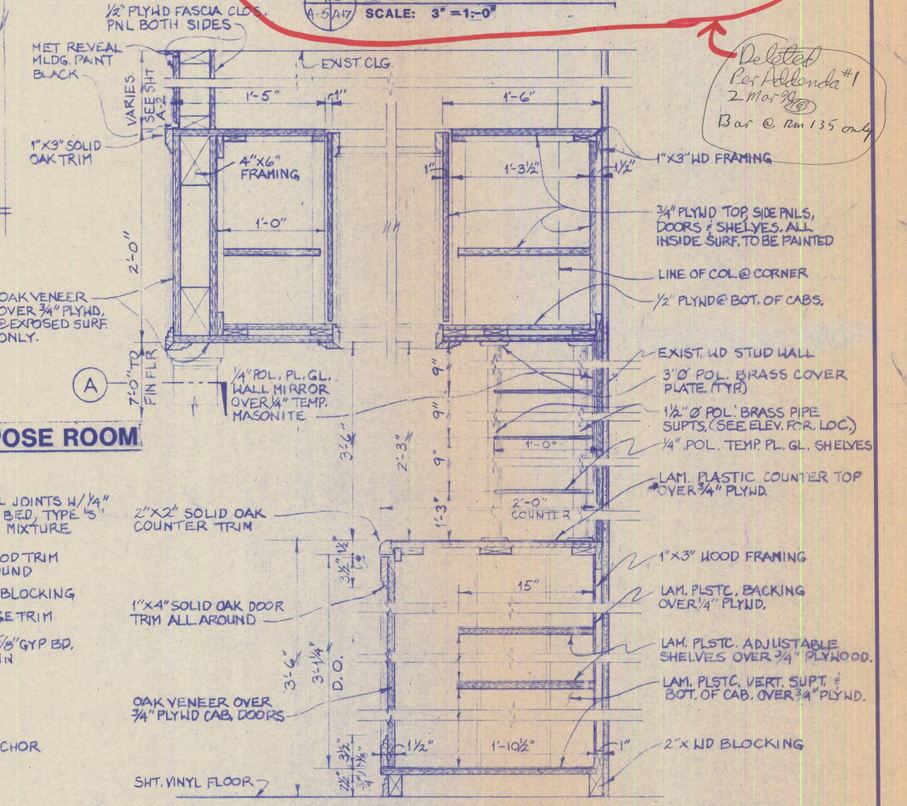

Deleted Per Addenda #1 2-MAR-90 Bar @ Rm 135 only

13 BAR REAR COUNTER & STORAGE CABINETS
A-5/A-17 SCALE: 1-1/2" 1'-0"

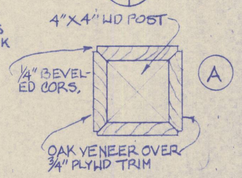

REVISION NO.	DATE	DESCRIPTION	AGENCY	BY

Pan Am World Services, Inc.

UNITED STATES AIR FORCE
HQ 6592d SUPPORT GROUP (AFSC)
LOS ANGELES AIR FORCE BASE

RENOVATE BUILDING 403 COMMUNITY CENTER
LAO 89-1028
FORT MacARTHUR, CALIFORNIA
LOS ANGELES AIR FORCE BASE

DETAILS

DESIGNED BY: UA
DRAWN BY: SB
CHECKED BY: U.A.
SUBMITTED BY: DATE

APPROVED: USING AGENCY / BASE CIVIL ENGINEER — DATE

SPECIFICATION NO. 6592 / DE 9010289
DATE 10/16/89 — SCALE AS NOTED
DRAWING NUMBER 00403 - 5010289 (ATCH. 3) — A-17
SHEET 23 OF 48

GRAPHIC SCALE: 3/4" : 1'-0"; 1" : 1'-0"; 1 1/2" : 1'-0"; 3" : 1'-0"; HALF SCALE

COORDINATED: MANAGER ENGINEER — DATE; SECURITY — DATE; SAFETY DIVISION — DATE; CHIEF FIRE PROTECTION — DATE; COMMUNICATIONS ENGINEER — DATE; BIOENVIRONMENTAL ENGINEER — DATE