INCH - POUND

MIL-PRF-32207
10 October 2006

PERFORMANCE SPECIFICATION

PROPELLANT, METHANE

This specification is approved for use by all Departments and Agencies of the Department of Defense.

Comments, suggestions, or questions on this document should be addressed to DET 3, WR-ALC/AFTT, 2430 C Street, Bldg 70, Area B, Wright-Patterson AFB OH 45433-7632 or e-mailed to AFPET.AFTT@wpafb.af.mil. Since contact information can change, you may want to verify the currency of this address information using the ASSIST Online database at http://assist.daps.dla.mil.

AMSC N/A

FSC 9135

DISTRIBUTION STATEMENT A. Approved for public release; distribution is unlimited.

MIL-PRF-32207

1. SCOPE

1.1 Scope. This specification covers two types and three grades of propellant methane.

1.2 Classification. The propellant methane will be of the following designated types and grades:

Types

I – Gaseous

II – Liquid

Grades

A – 98.7% purity

B – 99.9% purity

C – 99.97% purity

2. APPLICABLE DOCUMENTS

2.1 General. The documents listed in this section are specified in 3, 4, or 5 of this specification. This section does not include documents cited in other sections of this specification or recommended for additional information or as examples. While every effort has been made to ensure the completeness of this list, document users are cautioned that they must meet all specified requirements of documents cited in sections 3, 4, or 5 of this specification, whether or not they are listed.

2.2 Government documents.

2.2.1 Specifications, standards, and handbooks. The following specifications, standards and handbooks form a part of this document to the extent specified herein. Unless otherwise specified, the issues of these documents are those cited in the solicitation or contract.

DEPARTMENT OF DEFENSE SPECIFICATIONS

MIL-PRF-27401	Propellant, Pressurizing Agent, Nitrogen
MIL-PRF-27407	Propellant, Pressurizing Agent, Helium

Copies of this document are available online at http://assist.daps.dla.mil/quicksearch/ or http://assist.daps.dla.mil or from the Standardization Document Order Desk, 700 Robbins Avenue, Bldg 4D, Philadelphia PA 19111-5094.)

2.3 Non-government publications. The following documents form a part of this document to the extent specified herein. Unless otherwise specified, the issues of these documents are those cited in the solicitation or contract.

AMERICAN SOCIETY FOR TESTING AND MATERIALS, INC. (ASTM)

ASTM D 1945	Standard Test Method for Analysis of Natural Gas by Gas Chromatography
ASTM D 6667	Standard Test Method for Determination of Total Volatile Sulfur in Gaseous Hydrocarbons and Liquefied Petroleum Gases by Ultraviolet Fluorescence
ASTM E 29	Standard Practice for Using Significant Digits in Test Data to Determine Conformance with Specifications (DoD Adopted)
ASTM F 307	Standard Practice for Sampling Pressurized Gas for Gas Analysis (DoD Adopted)
ASTM F 310	Standard Practice for Sampling Cryogenic Aerospace Fluids (DoD Adopted)

(Copies of these documents are available online at http://www.astm.org or from the American Society for Testing and Materials, 100 Barr Harbor Drive, West Conshohocken PA 19428-2959)

2.4 Order of precedence. In the event of a conflict between the text of this document and the references cited herein, the text of this document takes precedence. Nothing in this document, however, supersedes applicable laws and regulations unless a specific exemption has been obtained.

3. REQUIREMENTS

3.1 Chemical and physical properties. The chemical and physical properties of the propellant shall conform to those listed in Table I when tested in accordance with applicable test methods.

3.2 Qualitative (Type II only). The propellant shall be a clear, colorless, homogenous liquid with no solid particles when examined visually by transmitted light at the normal boiling point.

3.3 Limiting values. For purposes of determining conformance with these requirements, an observed value or a calculated value shall be rounded off "to the nearest unit" in the last right-hand digit used in expressing the specified limit. This rounding off shall be done in accordance with the rounding-off method of ASTM E 29 (Using Significant Digits in Test Data to Determine Conformance with Specifications).

3.4 Filter. Unless otherwise specified by the contract or purchase order, a filter with no more than a 10-micrometer nominal and 40-micrometer absolute rating shall be installed between the manufacturer's plant system and the manifold used to fill the gas or liquid containers for delivery.

TABLE I. Chemical and physical properties.

Property	Grade			Test Paragraph
	A	B	C	
Purity (CH_4), % Vol, min	98.7	99.9	99.97	4.5.2
Water, ppmV, max	1	0.5	0.5	4.5.3
Oxygen, ppmV, max	1	1	1	4.5.4
Nitrogen, ppmV, max	5000	100	100	4.5.4
Carbon dioxide, ppmV, max	125	50	50	4.5.4
Other gaseous impurities, ppmV, max (i.e. Ar, H_2, He, Ne)	5000	125	125	4.5.5
Ethane (C_2H_6), ppmV, max	5000	500	100	4.5.4
Propane (C_3H_8), ppmV, max	3000	500	100	4.5.4
Other volatile hydrocarbons, ppmV, max	1	1	1	4.5.6
Total volatile sulfur, ppmV, max	1	0.1	0.1	4.5.7
Non-volatile residue (NVR) & particulates, mg/L, max [1]	10	1	1	4.5.8

NOTES:
1. Applicable to Type II only.

3.5 Filled containers (Type I only).

3.5.1 Filling pressure. The filling pressure shall not differ from that required by the contract by more than 1.0% at 70°F (21°C), and in no case shall it exceed the rated service pressure of the container.

3.5.2 Leakage. Filled cylinders shall not leak when tested according to 4.6.2.

4. VERIFICATION

4.1 Classification of tests. The inspection and testing of the propellant requirements specified herein are classified as quality conformance tests (4.2).

4.2 Conformance inspection. Quality conformance tests shall consist of the following:

a. Examination 4.2.1

b. Sampling tests 4.2.2

c. Individual tests 4.2.3

4.2.1 Examination. Type II propellant shall be sampled according to 4.3 and the sample subjected to the following test as described under 4.5.

Examination of product 4.5.1

4.2.2 Sampling tests. The propellant methane shall be sampled according to 4.3 and the samples tested for conformance to the limits of Table I utilizing the procedures described under 4.5. Calibration gas standards may be required to calibrate (zero and span) analytical instruments used to determine the purity and impurity contents of the methane. The accuracy of the calibration gas standards is to be traceable to the National Institute of Standards and Technology.

4.2.1 Individual tests. Each Type I container (cylinder, tube or bulk conveyance) shall be subjected to the tests described under 4.6.

4.3 Sampling plan.

4.3.1 Sample size. Each sample shall be of sufficient size (approximately 70 L at STP) to conduct all of the quality conformance tests as specified herein.

4.3.2 Samplers. The sampler for Type I (gaseous) methane shall be a small compressed gas cylinder. The sampler for Type II (liquid) methane shall be functionally equivalent to a cosmodyne. Liquid samplers convert the entrapped liquid to gas. The aliquots taken for analysis are representative samples.

4.3.3 Sampling methods. Unless otherwise specified, Type I (gaseous) product shall be sampled in accordance with ASTM F 307; Type II (liquid) product shall be sampled in accordance with ASTM F 310. All apparatus used shall be made of suitable materials. Each sample taken for analysis shall be representative of the product being sampled. (NOTE: For Type I (gaseous), a representative sample may also be obtained by withdrawing a sample from the sampling port on the shipping container directly into the analytical instruments).

4.3.4 Cylinders. Unless otherwise specified in the contract or purchase order, each filled cylinder (pressure and Dewar types) offered for shipment shall constitute a lot and be sampled for analysis.

4.3.5 Bulk conveyance. For bulk shipments, each filled container shall constitute a lot. Each individual tube on a tube-bank trailer is considered a separate container. A sample for analysis shall be taken from each portable tank, cargo tank, tank car, or tube filled with Type I (gaseous) or Type II (liquid) methane.

4.4 Rejection and retest. When any sample of the product tested in accordance with 4.2 fails to conform to the requirements specified herein, the entire lot represented by the sample shall be rejected. Rejected material shall not be resubmitted without furnishing full particulars concerning previous rejection and measures taken to overcome defects.

4.5 Test methods. The samples shall be analyzed according to the procedures described below.

4.5.1 Examination of product. (Type II only) Product shall be visually inspected during the NVR and particulate determination described in 4.5.8 to verify conformance with this specification (see 3.2).

4.5.2 Purity. The propellant methane content of the sample shall be calculated by the following formula:

$$\%CH_4 = 100 - \left(\frac{\sum C_i}{10000}\right)$$

where,

$\%CH_4$ = purity (%Vol).

$\sum C_i$ = the sum of all impurity species (ppmV).

NOTE: Non-volatile residue (NVR) and particulates are not included in the purity calculation.

4.5.3 Water. The water content of the sample shall be determined by one of the following methods. In case of dispute, the electrolytic method in 4.5.3.1 shall be used as the referee.

4.5.3.1 Electrolytic method. Connect the sample container to a pressure regulator which is attached to the electrolytic moisture apparatus (hygrometer). Open the sample container valve and adjust the pressure to the apparatus in accordance with manufacturer's recommended value. Allow sufficient time for the indicated moisture content to become stable and read the value obtained while using the most sensitive scale setting possible for the moisture content of the sample. The electrolytic moisture apparatus should be set on a range no greater than ten times the specified maximum moisture content.

4.5.3.2 Piezoelectric method. Determine the moisture content utilizing a piezoelectric sorption hygrometer that is set on a range no greater than ten times the specified maximum moisture content by following the instrument manufacturer's instructions.

4.5.3.3 Aluminum oxide method. Determine the moisture content utilizing an aluminum oxide capacitor-equipped analyzer set on a range no greater than ten times the specified maximum moisture content by following the instrument manufacturer's instructions.

4.5.4 Gaseous impurities. Oxygen, nitrogen, carbon dioxide, ethane and propane shall be determined by the gas chromatographic method described in 4.5.4.1. The carbon dioxide content of the sample may also be determined by the procedure described in 4.5.4.2. The oxygen content may be determined by the procedure described in 4.5.4.3. In case of dispute the gas chromatographic method in 4.5.4.1 shall be used as the referee.

4.5.4.1 Gas chromatograph. Determine the gaseous impurities of the sample with a gas chromatograph in accordance with ASTM D 1945. The analyzer shall be capable of separating the compound with a sensitivity of 0.5 ppm or 20% of the specified maximum concentration of the component, whichever is greater. Appropriate impurity concentration techniques may be used to attain the sensitivity. The analyzer shall be calibrated at appropriate intervals by the use of calibration gas standards which contain the applicable limiting characteristic gaseous components in methane.

4.5.4.2 Infrared analyzer. The carbon dioxide content of the sample may be determined with a gas cell equipped dispersive or non-dispersive infrared analyzer. The analyzer shall be calibrated at appropriate intervals with carbon dioxide in methane standards at approximately 14.95 microns

(669 cm^{-1}). The sensitivity of the analyzer shall be at least 10 ppm or 10 percent of the specified maximum carbon dioxide content, whichever is greater.

4.5.4.3 Oxygen analyzer. The oxygen content of the sample may be determined with an electrolytic oxygen analyzer that is set on a range no greater than ten times the specified maximum oxygen content by following the manufacturer's instructions.

4.5.5 Other gaseous impurities. Calculate the total content of other gaseous impurities of the sample by summing the amount of the following individual components in the sample as determined utilizing the procedure(s) of 4.5.4.

Argon (Ar)

Helium (He)

Hydrogen (H_2)

Neon (Ne)

4.5.6 Other volatile hydrocarbons. The total volatile hydrocarbon content of the sample, excluding ethane and propane shall be determined utilizing a gas chromatograph with a flame ionization detector.

4.5.7 Total volatile sulfur. The total volatile sulfur content shall be determined in accordance with ASTM D 6667 in which the sulfur compounds are reacted to form a compound which is subsequently measured by UV fluorescence. The analyzer shall be calibrated at appropriate intervals by the use of calibration gas standards. The range of the analyzer shall be no greater than ten times the specified maximum total sulfur content

4.5.8 Non-volatile residue & particulates. (Type II only) Thoroughly clean a 125 mL Erlenmeyer flask. Dry the flask in an oven at 105 ± 5°C for 30 minutes. After drying, cover the flask with a watch glass or inverted small beaker and allow it to cool next to the balance for 30 minutes. Weigh the flask to the nearest 0.01 mg. Place the flask in a gas purged container that holds the flask securely but allows gas to be purged around the outside of the flask to avoid moisture condensation (see figure 1). Initiate a flow of nitrogen gas conforming to MIL-PRF-27401 (Grade B or C) or helium conforming to MIL-PRF-27407 (Grade A or B) through the purged container to minimize condensation on the outside of the flask. Fill the flask to the 100 mL line with the liquid methane sample and start a flow of the nitrogen or helium into the flask to help evaporate the sample and prevent condensation in the flask. Adjust flows as needed to prevent condensation and continue purging until the methane has evaporated and the flask is back to ambient temperature. Shut off gas flows. Remove the flask from the gas purged container, cover with the watch glass or small beaker and place it next to the balance for 30 minutes. Weigh the flask to the nearest 0.01 mg. For Grades B and C, more than 100 mL may need to be evaporated to reduce the effect of balance uncertainty on the result. (NOTE: Sampling should be performed either with the use of a Dewar or directly from the shipping container).

4.5.8.1 Calculation. The non-volatile residue and particulates will be calculated using the following formula:

$$NVR\ \&\ particulates(mg/L) = \frac{W_g - W_t}{V_s}$$

Where:

W_g = Gross weight of flask (mg)

W_t = Tare weight of flask (mg)

V_s = Volume of sample (L)

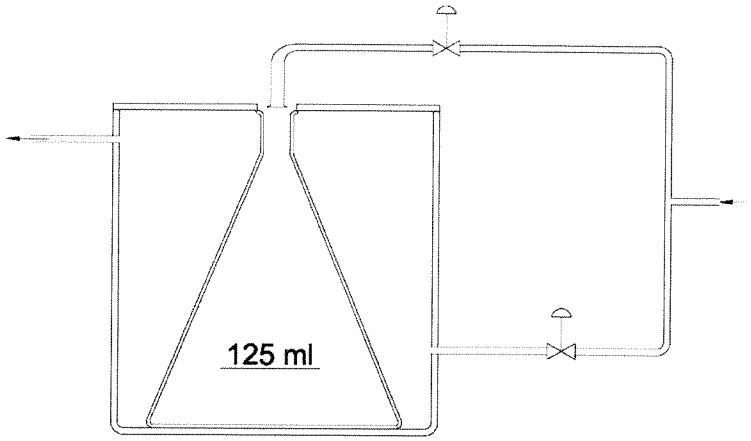

Figure 1: NVR Apparatus

4.6 Container. For purposes of this paragraph, a container is defined as an individual cylinder, an individual tube in a tube bank trailer, or multiple cylinders that are interconnected by a single manifold that equalizes the pressure across all cylinders.

4.6.1 Filling pressure. Containers shall be tested for proper filling pressure by attaching a calibrated Bourdon-tube gauge or equivalent to the valve outlet and by attaching either a thermocouple or thermometer to the container wall. The gauge shall have scale divisions no greater than 10 psi for service pressures of less than or equal to 3000 psig, and no greater than 15 psi for service pressures greater than 3000 psig. If a thermometer is used, tape or putty shall be applied to the bulb to protect it from extraneous temperatures. Putty shall not be applied between the bulb and the cylinder wall. The thermometer shall have scale divisions no greater than 2°F (1°C). The containers shall be stabilized to ambient temperature. Then the valve shall be opened and the internal pressure observed on the gauge.

4.6.2 Leakage. Each container shall be tested for leaks at the neck threads, stem packing, and safety device of the valve with leak-detection fluid. Valve seat leakage shall be tested by means of a tube from the valve outlet to a container of liquid.

5. PACKAGING.

5.1 Packaging. For acquisition purposes, the packaging requirements shall be as specified in the contract or order (see 6.2). When actual packaging of materiel is to be performed by DoD or in-house

contractor personnel, these personnel need to contact the responsible packaging activity to ascertain packaging requirements. Packaging requirements are maintained by the Inventory Control Point's packaging activities within the Military Service or Defense Agency, or within the military service's system commands. Packaging data retrieval is available from the managing Military Department's or Defense Agency's automated packaging files, CD-ROM products, or by contacting the responsible packaging activity.

6. NOTES

(This section contains information of a general or explanatory nature that may be helpful, but is not mandatory.)

6.1 Intended use. The propellant covered by this specification is intended for use as fuel in rocket engines.

6.2 Subject term (key word) listing.

Cosmodyne

Cylinder

Dewar

6.3 Part or identifying number (PIN). The PIN's to be used for propellant methane acquired to this specification are created as follows:

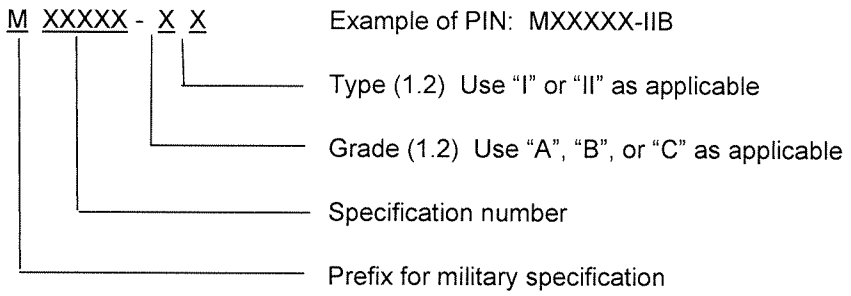

6.4 Changes from previous issue. Marginal notations are not used in this specification.

MIL-PRF-32207

Custodians:
Army – MI
Navy – SA
Air Force – 68
DLA - PS

Civil agency:
NASA – NA

Preparing activity:
Air Force – 68
(Project 9135-2006-004)

Note: The activities listed above were interested in this document as of the date of this document. Since organizations and responsibilities can change, you should verify the currency of the information using the ASSIST Online database at http://assist.daps.dla.mil.

TRANSPORT EQUIPMENT DELAY CERTIFICATE

1. CONSIGNOR	2. CONSIGNEE	3. PRODUCT
4. CARRIER	5. TRAILER NUMBER	6. DATE SHIPPED
7. FREIGHT BILL NUMBER	8. GBL NUMBER	9. SEAL NUMBER

10. LOADING/UNLOADING INFORMATION

	DATE RECEIVED	TIME		DATE RECEIVED	TIME
A. ARRIVED			D. FINISH		
B. ACCEPTED FOR LOADING/UNLOADING			E. UNIT RELEASED		
C. START			F. TOTAL HOUR HELD		

11. REASON FOR DELAY (Make a complete statement adequately describing each segment of delay, amount of time each delay, and whether delay was the responsibility of carrier or consignee/consignor.)

12. DETENTION CERTIFICATE STATEMENT : I certify that the above information is true and correct to the best of my knowledge.

SIGNATURE AND TITLE OF CONSIGNEE	SIGNATURE AND TITLE OF SHIPPER	SIGNATURE OF DRIVER

13. NOTE TO CARRIER: A copy of "TRANSPORT EQUIPMENT DELAY CERTIFICATE" must accompany each detention invoice to provide documentation for invoice certification and payment

CONTRACTOR PERFORMANCE DATA SHEET

Please submit the requested information for government and non-government contracts or subcontracts held (not to exceed 3 years since completion) for contracts that are similar to the requirements of this solicitation. Those contracts and/or subcontracts submitted may include those still in progress, however they should have a minimum of one year's performance history.

Please mark this box if you have not performed under contracts that are similar in nature to the solicitation requirements.

COMPANY NAME	POINT OF CONTACT	PHONE NUMBER	FAX NUMBER	PRODUCT SUPPLIED	QTY	METHOD OF DELIVERY	PLACE OF PERFORMANCE	PERIOD OF PERFORMANCE	SUBCONTRACTING PLAN (YES OR NO)