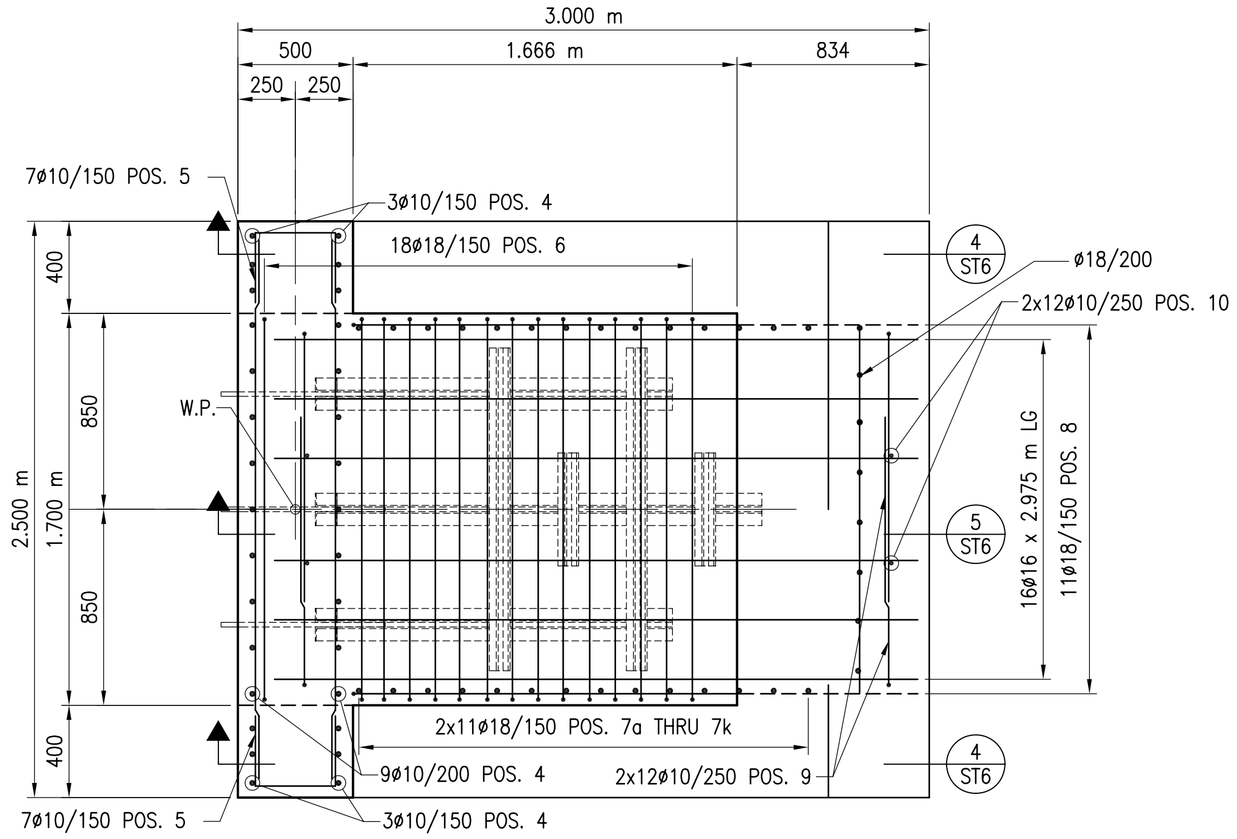

1 ST6 PLAN – COUNTERFORT REINFORCEMENT 1:20

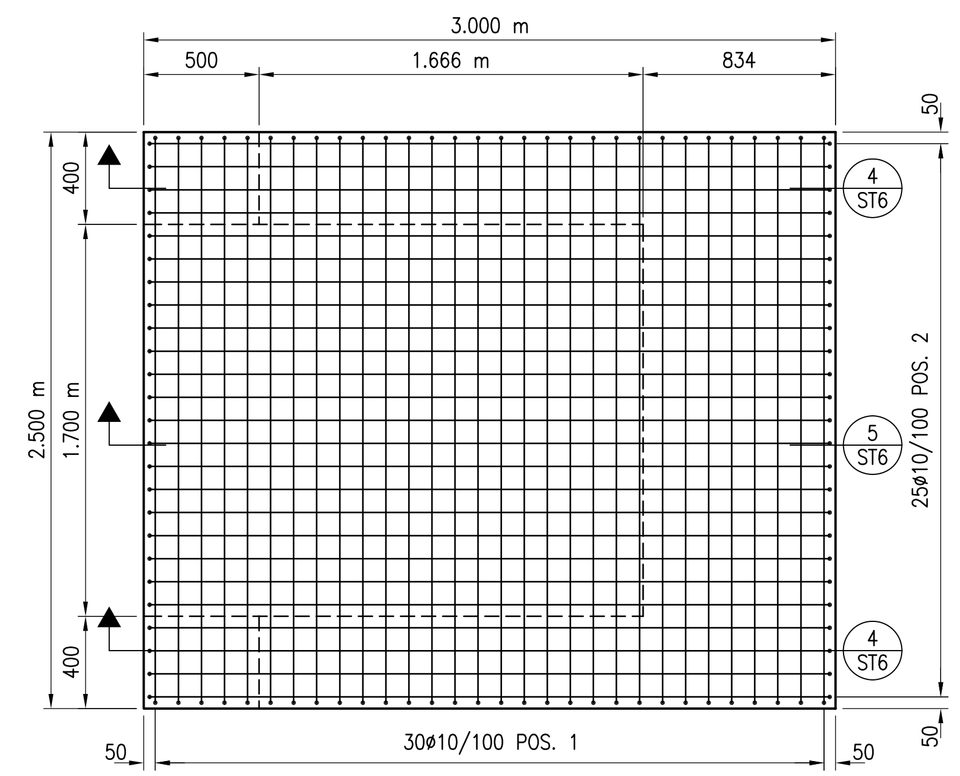

2 ST6 PLAN – LOWER REINFORCEMENT 1:20

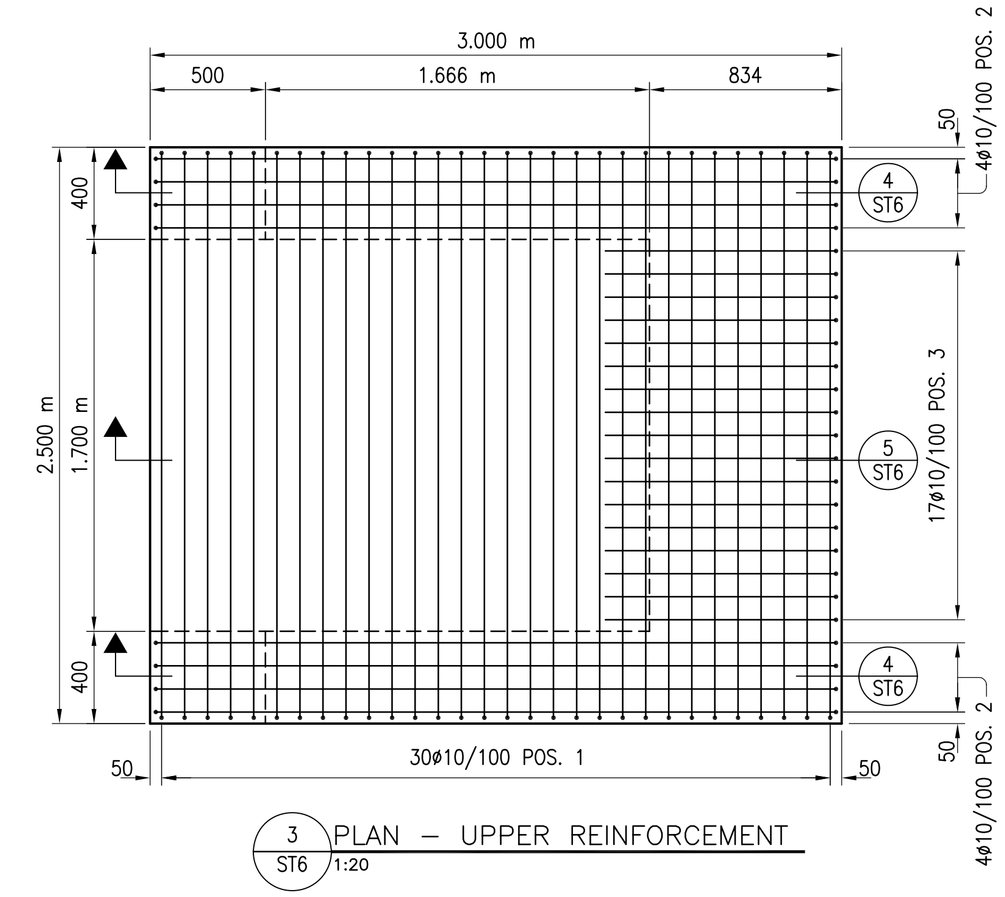

3 ST6 PLAN – UPPER REINFORCEMENT 1:20

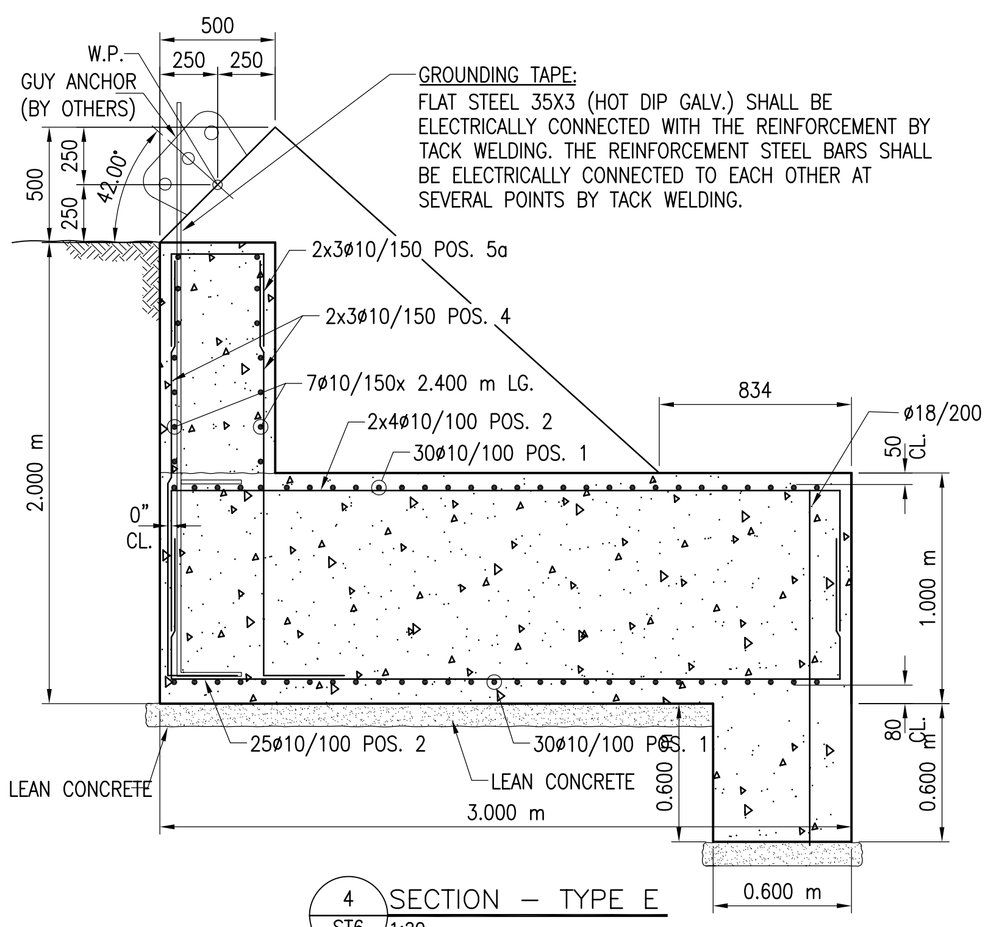

GROUNDING TAPE:
FLAT STEEL 35X3 (HOT DIP GALV.) SHALL BE ELECTRICALLY CONNECTED WITH THE REINFORCEMENT BY TACK WELDING. THE REINFORCEMENT STEEL BARS SHALL BE ELECTRICALLY CONNECTED TO EACH OTHER AT SEVERAL POINTS BY TACK WELDING.

4 ST6 SECTION – TYPE E 1:20

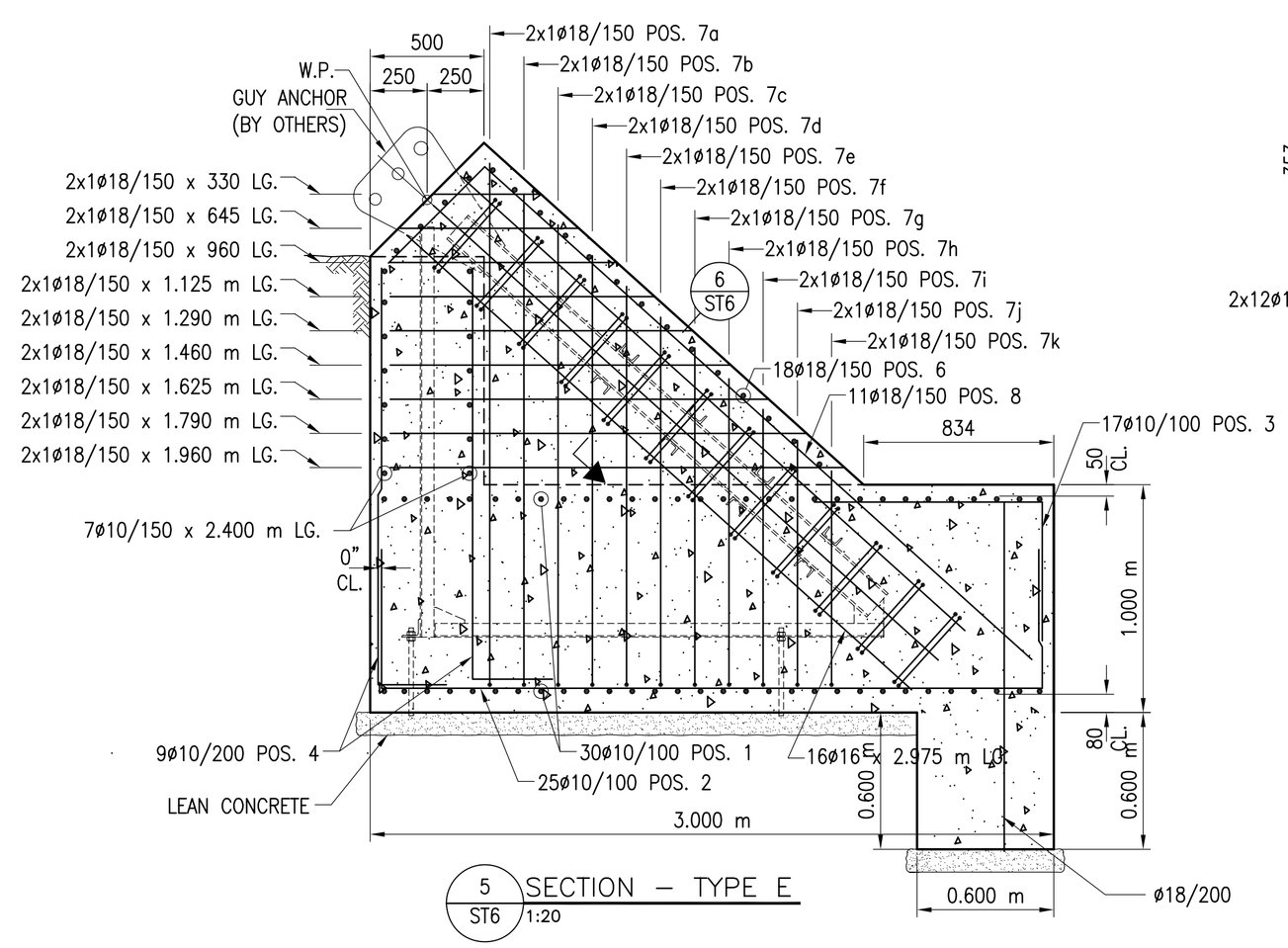

5 ST6 SECTION – TYPE E 1:20

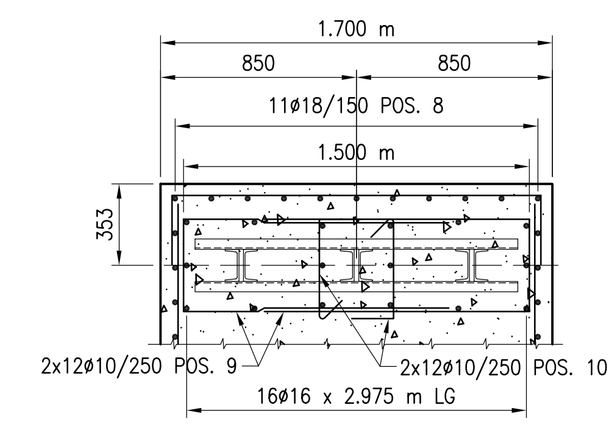

6 ST6 SECTION – TYPE E 1:20

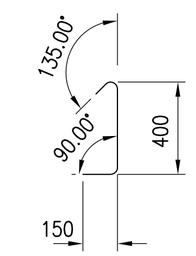

POS. 10
LG. = 640

NOTE:
ALL DIMENSIONS ARE IN MILLIMETERS UNLESS OTHERWISE NOTED.

CONCRETE COVER: 50mm ALL SURFACES EXCEPT BOTTOM OF FOOTINGS: 80mm.

AS BUILT

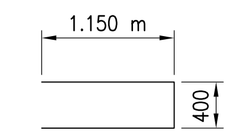

POS. 9
LG. = 2.700 m

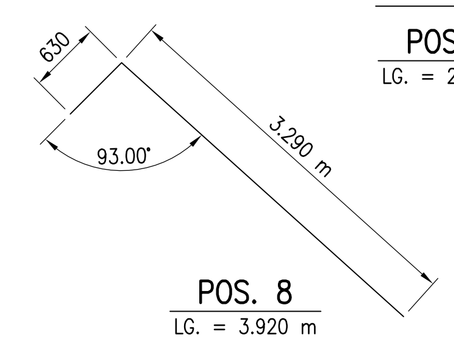

POS. 8
LG. = 3.920 m

GRAPHIC SCALE:
0 0.25m 0.5m 1m
SCALE: 1:20 (METRIC)

SEAL:

REV	DESCRIPTIONS	DATE	APPD.
	REVISION		

INTERNATIONAL BROADCASTING BUREAU
ENGINEERING & TECHNICAL OPERATIONS
WASHINGTON, D.C. 20547

Bader Al Mulla & Bros. Co. W.L.L.
Engineering Group

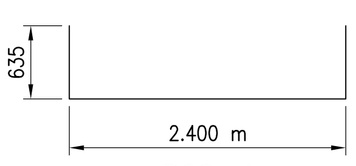

POS. 1
LG. = 3.670 m

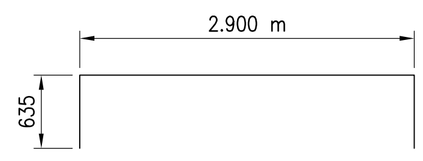

POS. 2
LG. = 4.170 m

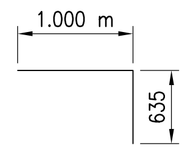

POS. 3
LG. = 1.635 m

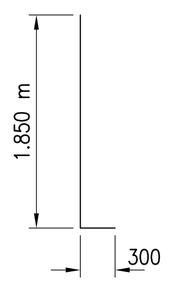

POS. 4
LG. = 2.150 m

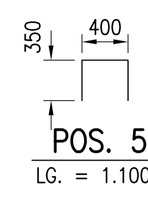

POS. 5a
LG. = 1.100 m

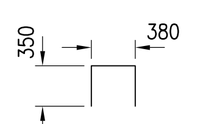

POS. 5
LG. = 1.080 m

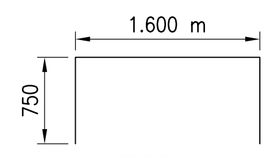

POS. 6
LG. = 3.100 m

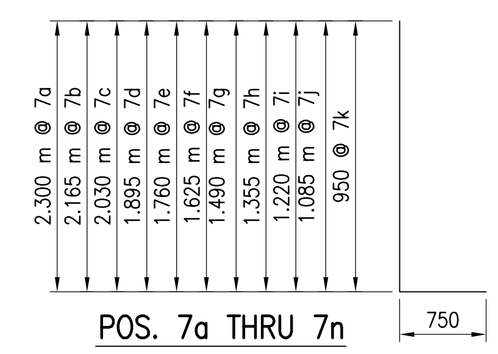

POS. 7a THRU 7n

7a – LG. = 3.050 m
7b – LG. = 2.915 m
7c – LG. = 2.780 m
7d – LG. = 2.645 m
7e – LG. = 2.510 m
7f – LG. = 2.375 m
7g – LG. = 2.240 m
7h – LG. = 2.105 m
7i – LG. = 1.970 m
7j – LG. = 1.835 m
7k – LG. = 1.700 m

		DATE
DRAWN	HAK	06/06/04
CHK. BY.	JPB	07/06/04
ENGR.	JPB	07/06/04

APPROVALS
PROJ. MANAGER TC

SHORTWAVE EXPANSION PROJECT
FOUNDATION TYPE E
KUWAIT

IQC No. XX-XX-XX
TASK No. X
PROJ. No. 03NC080

DWG. No. BMB-AS-ST-06
ST6
SCALE: AS SHOWN

90 Gatzel Drive, Wayne, NJ 07470 TEL : (973) 785-4646 FAX : (973) 785-0766 www.hansonengineers.com
HANSON THALES
678 North Washington St., Alexandria, VA 22314 TEL : (703) 836-5844 FAX : (703) 836-5854 www.thales-bm.com