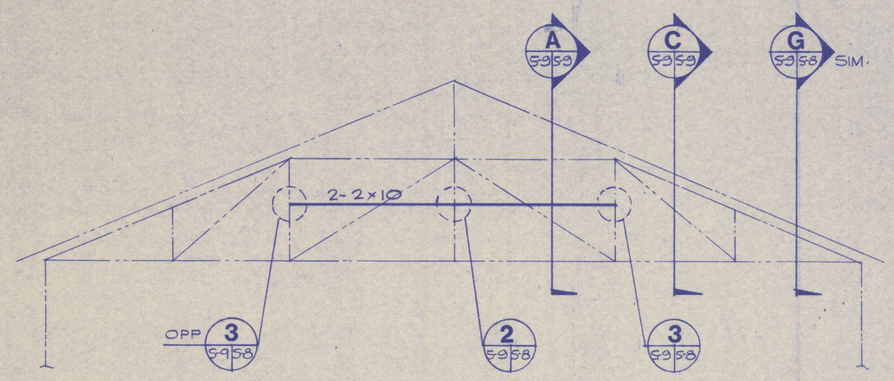

1 EXISTING TRUSS ELEVATION AT MULTI-PURPOSE ROOM

A-2/5-11 5-9

SCALE: 1/4" = 1'-0"

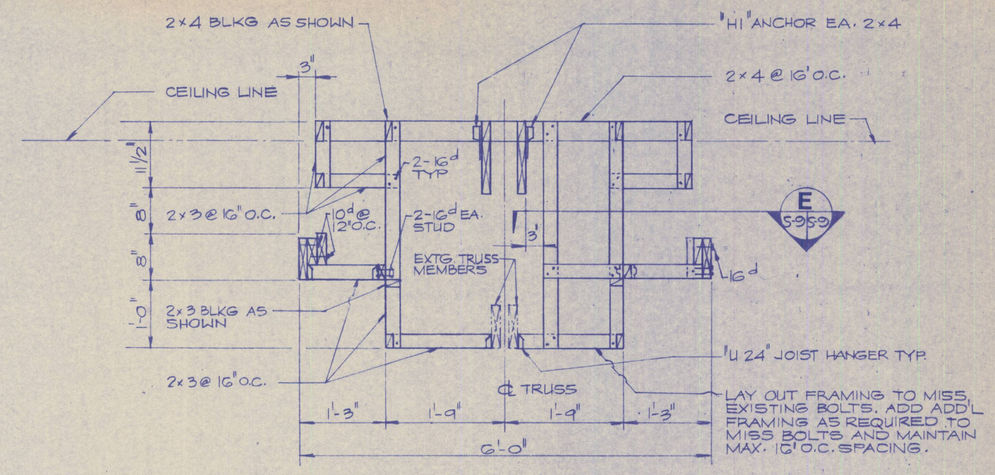

A FURRED SOFFIT AT EXIST. WD. TRUSS

5-9/5-9

SCALE: 1" = 1'-0"

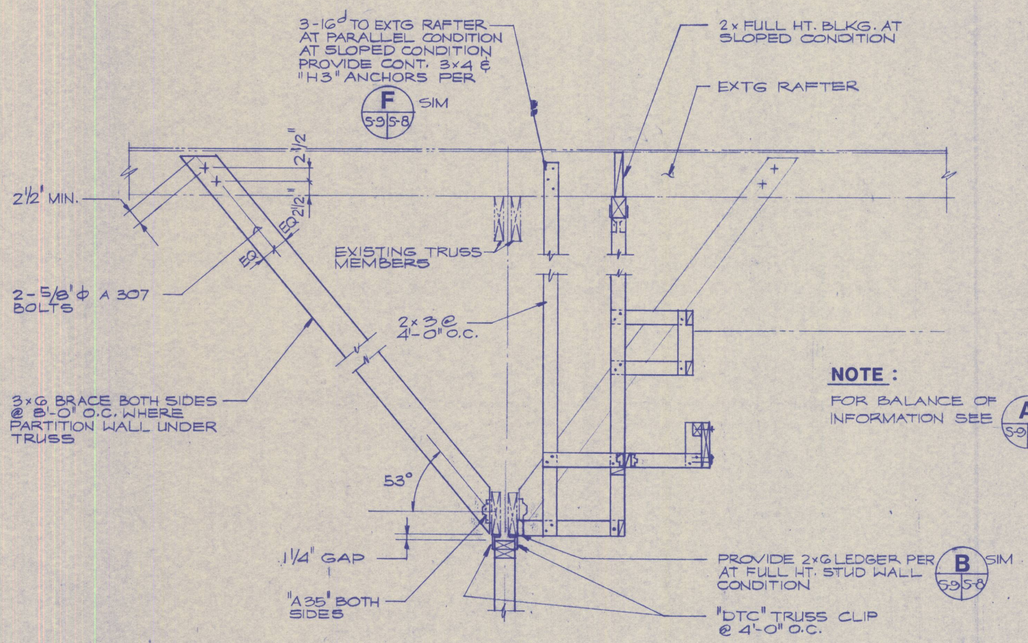

NOTE:

FOR BALANCE OF INFORMATION SEE A 5-9/5-9 & C 5-9/5-9

B SOFFIT AT STUD WALL

5-11/5-9 5-10

SCALE: 1" = 1'-0"

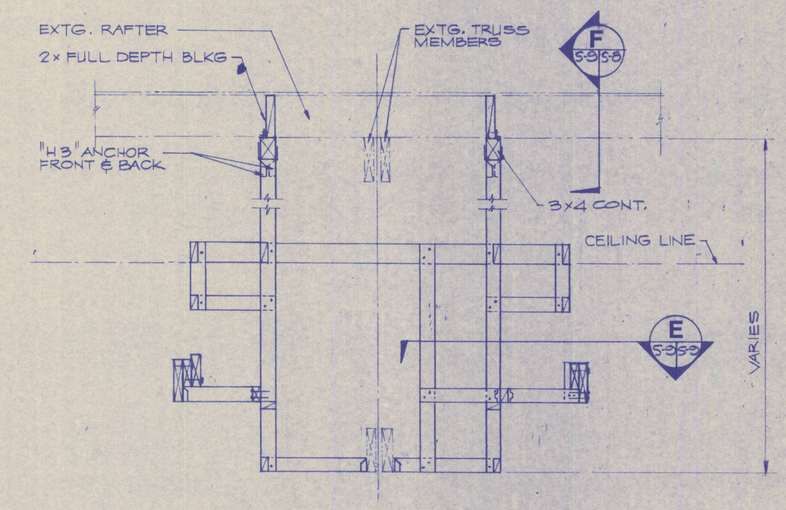

NOTE: FOR BALANCE OF INFORMATION SEE A 5-9/5-9

C FURRED SOFFIT AT EXIST. WD. TRUSS

5-9/5-9

SCALE: 1" = 1'-0"

NOTE:

1. CONTRACTOR SHALL EXCERSIZE EXTREME CARE WHILE WORKING ON EXISTING ROOF TRUSSES. PREDRILL HOLES FOR NAILS IF SPLITTING OF MEMBER IS LIKELY TO OCCUR. ANY SPLITTING OF MEMBERS DURING CONSTRUCTION OR EXISTING SPLITS SHALL BE REPORTED TO THE CONTRACTING OFFICER.

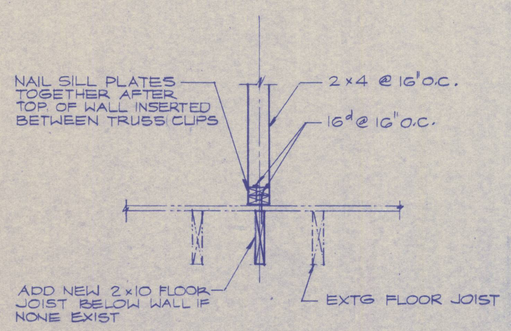

D STUD WALL TO EXIST. FRAMING

5-11/5-9

SCALE: 1" = 1'-0"

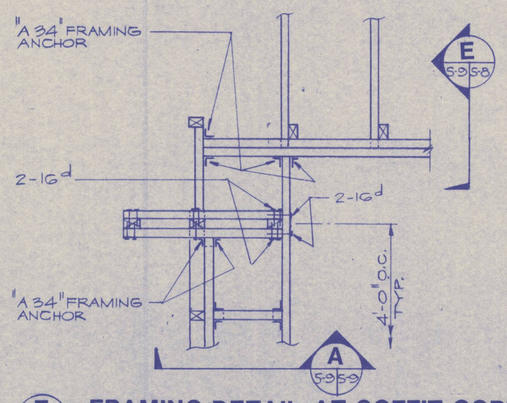

E FRAMING DETAIL AT SOFFIT CORNER

5-9/5-9

SCALE: 1" = 1'-0"

GRAPHIC SCALE

1/4" : 1'-0" 4' 2' 0' 4' 8'

1" : 1'-0" 12" 9" 6" 3" 0 1' 2'

COORDINATED

MANAGER ENGINEER		DATE
SECURITY		DATE
SAFETY DIVISION		DATE
CHIEF FIRE PROTECTION		DATE
COMMUNICATIONS ENGINEER		DATE
BIOENVIRONMENTAL ENGINEER		DATE

APPROVED

USING AGENCY		DATE
BASE CIVIL ENGINEER		

REVISION NO.	DATE	DESCRIPTION	AGENCY	BY

Pan Am World Services, Inc.

UNITED STATES AIR FORCE
HQ 6592d SUPPORT GROUP (AFSC)
LOS ANGELES AIR FORCE BASE

DESIGNED BY M.W.
DRAWN BY T.D.
CHECKED BY
SUBMITTED BY DATE

RENOVATE BUILDING 403
COMMUNITY CENTER
LAO 89-1028
FORT MacARTHUR, CALIFORNIA
LOS ANGELES AIR FORCE BASE
MULTI-PURPOSE RM. SOFFIT SECT'S

SPECIFICATION NO. 6592/DE.9010289
DATE 10-16-89
SCALE AS NOTED
DRAWING NUMBER 00403-5010289 (ATCH.3)
5-9
SHEET 34 OF 48