APPENDIX O

AVAILABLE DRAWINGS OF IRRIGATION SYSTEM AT LAYDOWN AREA

IRRIGATION NOTES

1. DESIGNS ARE DIAGRAMMATIC. ALL PIPING, VALVES, ETC. SHOWN WITHIN PAVED AREAS ARE FOR DESIGN CLARIFICATION ONLY AND SHALL BE INSTALLED IN PLANTING AREAS WHEREVER POSSIBLE.

2. ALL SPRINKLER HEADS ARE TO HAVE TRIPLE SWING JOINTS (EXCEPT WHERE NOTED ON PLANS).

3. PIPE SIZES SHALL CONFORM TO THOSE SHOWN ON THE DRAWINGS. NO SUBSTITUTIONS OF SMALLER PIPE SIZES SHALL BE PERMITTED, BUT SUBSTITUTIONS OF LARGER SIZES MAY BE APPROVED BY THE ENGINEER. ALL DAMAGED AND REJECTED PIPE SHALL BE REMOVED FROM THE SITE AT THE TIME OF THE SAID REJECTION.

4. FINAL LOCATION OF THE AUTOMATIC CONTROLLER AND MAINLINE PATHS SHALL BE APPROVED BY THE ENGINEER PRIOR TO THEIR INSTALLATION.

5. BEFORE COMMENCING ANY EXCAVATION, THE CONTRACTOR SHALL OBTAIN AN UNDERGROUND SERVICE ALERT I.D. NUMBER BY CALLING 1-800-227-2600. TWO (2) WORKING DAYS SHALL BE ALLOWED AFTER THE I.D. NUMBER IS OBTAINED AND BEFORE THE EXCAVATION WORK IS STARTED SO THAT UTILITY OWNERS CAN BE NOTIFIED.

6. ALL SPRINKLER HEADS SHALL BE SET PERPENDICULAR TO FINISH GRADE UNLESS OTHERWISE SPECIFIED.

7. THE CONTRACTOR SHALL FLUSH AND ADJUST ALL SPRINKLER HEADS AND VALVES FOR OPTIMUM COVERAGE WITH MINIMAL OVER SPRAY ONTO WALKWAYS, STREETS, ETC.

8. IT IS THE RESPONSIBILITY OF THE CONTRACTOR TO BECOME FAMILIAR WITH THE GRADE DIFFERENCES, LOCATION OF WALLS, AND UTILITIES. PROTECT IN PLACE EXISTING IRRIGATION. CONTRACTOR TO VERIFY THE CONDITION OF EXISTING IRRIGATION SYSTEMS AND EQUIPMENT WITH THE CITY PRIOR TO WORK. THE CONTRACTOR IS RESPONSIBLE FOR ANY DIRECT OR INDIRECT DAMAGE TO EXISTING WORK AND SHALL REPAIR OR REPLACE ALL ITEMS DAMAGED BY THIS WORK. THE CONTRACTOR SHALL COORDINATE ALL WORK WITH OTHER CONTRACTORS FOR THE LOCATION AND INSTALLATION OF PIPE SLEEVES AND MAINLINES UNDER ROADWAYS AND PAVING, ETC.

9. THE SPRINKLER SYSTEM DESIGN IS BASED ON A MINIMUM OPERATING PRESSURE OF 68 P.S.I. AND A MAXIMUM FLOW DEMAND OF 33.00 G.P.M. THE CONTRACTOR SHALL VERIFY WATER PRESSURES PRIOR TO CONSTRUCTION. REPORT ANY DIFFERENCE BETWEEN WATER PRESSURE INDICATED ON THE DRAWINGS AND THE ACTUAL PRESSURE READING AT THE IRRIGATION POINT OF CONNECTION TO THE ENGINEER.

10. DO NOT WILLFULLY INSTALL THE SPRINKLER SYSTEM AS SHOWN ON THE DRAWINGS WHEN IT IS OBVIOUS IN THE FIELD THAT THERE ARE UNKNOWN CONDITIONS, OBSTRUCTIONS OR GRADE DIFFERENCES IN THE AREA. DIMENSIONS EXIST THAT MIGHT NOT HAVE BEEN CONSIDERED IN THE ENGINEERING. SUCH OBSTRUCTIONS OR DIFFERENCES SHOULD BE BROUGHT TO THE ATTENTION OF THE ENGINEER. IN THE EVENT THAT THIS NOTIFICATION IS NOT GIVEN, THE CONTRACTOR SHALL ASSUME FULL RESPONSIBILITY FOR ANY NECESSARY REVISIONS.

11. ALL SPRINKLER EQUIPMENT NOT OTHERWISE DETAILED OR SPECIFIED SHALL BE INSTALLED AS PER MANUFACTURER'S RECOMMENDATIONS AND SPECIFICATIONS.

12. THE INTENT OF THE DESIGN IS TO PROVIDE HEAD TO HEAD COVERAGE TO ALL PLANTING AREAS. THE ANGLES, DIRECTION AND FLOWRATE OF THE SPRINKLER HEADS MAY NEED TO BE ADJUSTED TO ACHIEVE FULL HEAD TO HEAD COVERAGE. AS PART OF THE SCOPE OF WORK, THE CONTRACTOR WILL PROVIDE ANY ADDITIONAL HEADS, SPECIAL NOZZLES, OR PATTERNS TO ACHIEVE PROPER COVERAGE WITH A MINIMUM OF OVER SPRAY AT NO ADDITIONAL COST TO THE CITY.

13. INSTALLATION FOR THE CONTROL WIRES SHALL FOLLOW MAINLINE ROUTING.

14. PROVIDE SLEEVES AS SHOWN ON DRAWINGS FOR PIPES TRAVERSING ROADWAYS OR DRIVE AREAS. SLEEVING MATERIAL TO BE GALVANIZED SCHEDULE 40 PIPE AND HAVE A PIPE DIAMETER TWICE THE SIZE OF THE PIPE TO BE PROTECTED AND BURIED TO A DEPTH OF 36" TO BASE OF PIPE.

15. LOCATE VALVE CHART IN CONTROLLER – REDUCE AND ENCASE IN PLASTIC.

16. GUARANTEE: THE INSTALLED SPRINKLER SYSTEM SHALL BE GUARANTEED FOR A PERIOD OF ONE (1) YEAR FROM THE DATE OF FINAL ACCEPTANCE OF THE WORK. SHOULD ANY ISSUES DEVELOP WITHIN THE TIME SPECIFIED DUE TO INFERIOR OR FAULTY MATERIAL OR WORKMANSHIP, THE ISSUE SHALL BE CORRECTED AND RESOLVED BY THE CONTRACTOR WITHOUT EXPENSE TO THE CITY.

17. FOR SEQUENCE OF INSTALLATION REFER TO SPECIFICATION SECTION 02900

PLANTING NOTES

1. DRAWING IS DIAGRAMMATIC: CONTRACTOR TO VERIFY ALL LOCATIONS AND CONDITIONS ON SITE. COUNT ALL PLANT MATERIAL BEFORE BIDDING.

2. CONTRACTOR TO INSPECT ALL EXISTING CONDITIONS ON SITE AND LOCATE ALL EXISTING UTILITIES PRIOR TO CONSTRUCTION.

3. CONTRACTOR TO REPAIR AT HIS OWN EXPENSE ALL PROPERTY DAMAGE WHICH OCCURS DURING PROJECT INSTALLATION.

4. NOTE ADDITIONAL REMARKS ON SPECIFIC PLANTS IN PLANT LIST.

5. ALL EXISTING PLANT MATERIAL TO BE REMOVED EXCEPT WHERE NOTED ON PLAN.

6. CONTRACTOR TO GUARANTEE ALL PLANT MATERIAL FOR 1 YEAR FROM THE DATE OF PARTIAL ACCEPTANCE BY THE ENGINEER.

7. FINISH GRADE TO BE 2 INCHES BELOW ALL WALKWAYS, CURBS, AND PAVING.

8. ALL LANDSCAPE AND BIOSWALE AREAS SHALL RECEIVE THE FOLLOWING STANDARD SOIL AMENDMENTS PER 1,000 SQ. FT. OF SURFACE AREA EXCEPT WHERE NOTED PER TECHNICAL SPECIFICATION 02950. ROTO-TILL AMENDMENTS TO A DEPTH OF 12 INCHES PRIOR TO PLANTING.

- 150 LBS. GRO-POWER (OR EQUIVALENT AS APPROVED BY ENGINEER)
- 3 CU YDS NITROLIZED FIR BARK OR REDWOOD SHAVINGS
- ADD 8 LBS OF GRO-POWER CONTROLLED RELEASE OR EQUIVALENT AS APPROVED BY ENGINEER 12-8-8 PER CU YD OF MIX.

9. PLANT HOLE TO BE TWICE AS WIDE AND DEEP AS THE PLANT ROOT BALL. BACKFILL AND COMPACT TO 80% WITH CLASS A TOPSOIL.
NATIVE PLANTS DO NOT RECEIVE ANY TABLETS.
FOR NON-NATIVE PLANTS, PROVIDE GRO-POWER PLANT TABLETS OR EQUIVALENT AS APPROVED BY ENGINEER AT THE FOLLOWING RATES:

- 1 GAL 2
- 5 GAL 5
- 15 GAL 10
- 24" BOX AND UP 14

PLACE RECOMMENDED TABLETS BETWEEN THE BOTTOM AND THE TOP OF THE ROOT BALL BUT NO HIGHER THAN 1/3 OF THE WAY UP TO THE TOP OF THE ROOT BALL. SPACE TABLETS EQUALLY AROUND THE PERIMETER OF THE ROOT BALL APPROXIMATELY 2 INCHES FROM THE ROOT TIPS.

10. DEEP ROOT BARRIERS ARE TO BE USED FOR ALL TREES LOCATED WITHIN 5 FT. OF PAVING. INSTALL VES PRO INC. LINEAR ROOT BARRIER (OR APPROVED EQUAL) PER MANUFACTURER'S SPECIFICATIONS.

11. ALL PROPOSED LANDSCAPE, BIOSWALE AND HYDROSEED AREAS ARE TO BE TREATED WITH A HERBICIDE (ROUNDUP OR EQUIVALENT AS APPROVED BY ENGINEER) PRIOR TO INSTALLATION OF PLANT/HYDROSEED MATERIAL PER THE SPECIFICATIONS.

12. CONTRACTOR TO INSTALL AND MAINTAIN LANDSCAPE PLANTING IN ACCORDANCE WITH THE SPECIFICATIONS UNLESS NOTED OTHERWISE ON THE PLANS.

13. FOR SEQUENCING OF INSTALLATION REFER TO SPECIFICATION SECTION 02950.

Lawrence R MOSS & Associates
LAWRENCE R MOSS ASLA
& ASSOCIATES INC
LIC. NO. 1201
3458 OCEAN VIEW BLVD
GLENDALE CA 91208
818 248-5200
FAX 248-6574
LANDSCAPE ARCHITECTURE
FN: D1951T04

MARK	DATE	BY	REVISIONS

DRAWN MEA DATE 02/08
DESIGNED LRM P.E. NO. 1201
PROJ. MGR. ESU P.E. NO.
SECT. HEAD DJS P.E. NO. C-46837
CHIEF HARBOR ENGR. P.E. NO. C-25677 DATE

THE PORT OF LONG BEACH
925 HARBOR PLAZA P.O. BOX 570 LONG BEACH CALIFORNIA 90801 TEL. (562) 437-0041

PORT OF LONG BEACH
PORTWIDE SWPP & DUST CONTROL PROGRAM
GENERAL NOTES (1 OF 2)

SCALE N/A SHEET 4 OF 165
SPECIFICATION NUMBER HD-S2299A
DRAWING NUMBER HD_10-1951-T04

ABBREVIATIONS/ACRONYMS

A/C	ASPHALT/CONCRETE
ADJ.	ADJUSTED
ASSY.	ASSEMBLY
ASTM	AMERICAN SOCIETY FOR TESTING AND MATERIALS
BLVD	BOULEVARD
BMP	BEST MANAGEMENT PRACTICE
CCS	CALIFORNIA COORDINATE SYSTEM
CMB	CRUSHED MISCELLANEOUS BASE
CMP	CORRUGATED METAL PIPE
CMU	CONCRETE MASONRY UNIT
CONC.	CONCRETE
CU. FT.	CUBIC FEET
DIA	DIAMETER
ELEC.	ELECTRICAL
FG	FINISHED GRADE
FL	FLOW LINE
FT	FEET
G.P.M.	GALLONS PER MINUTE
GAL	GALLON
GALV.	GALVANIZED
GPS	GLOBAL POSITIONING SYSTEM
I.D.	IDENTIFICATION
IN	INCHES
MON	MONITORING
MLLW	MEAN LOWER LOW WATER
NAD	NORTH AMERICAN DATUM
NGVD	NATIONAL GEODETIC VERTICAL DATUM
NIC	NOT IN CONTRACT
NO.	NUMBER
NTS	NOT TO SCALE
O.C.	ON CENTER
OZ	OUNCE
P.E.	PROFESSIONAL ENGINEER
P.S.I.	POUNDS PER SQUARE INCH
P.V.C.	POLY VINYL CHLORIDE
POC	POINT OF CONNECTION
POLB	PORT OF LONG BEACH
PROJ. MGR.	PROJECT MANAGER
PT	POINT
RAD	RADIUS
REF.	REFERENCE
RR	RAILROAD
SCE	SOUTHERN CALIFORNIA EDISON
SCH.	SCHEDULE
SECT.	SECTION
SQ. YD	SQUARE YARD
SSPWC	STANDARD SPECIFICATION FOR PUBLIC WORKS CONSTRUCTION (GREENBOOK)
STD.	STANDARD
SWPP	STORMWATER POLLUTION PREVENTION
SYM.	SYMBOL
TBD	TO BE DETERMINED
TYP	TYPICAL

GENERAL NOTES

1. CONTRACTOR TO VERIFY ALL EXISTING STRUCTURES, FEATURES, ABOVE-GROUND AND UNDERGROUND UTILITIES WHETHER SHOWN OR NOT SHOWN ON THE CONTRACT DRAWINGS, PRIOR TO COMMENCING WORK.

2. ALL EXISTING STRUCTURES, FEATURES, ABOVE-GROUND AND UNDERGROUND UTILITIES, WHETHER SHOWN OR NOT SHOWN ON THE CONTRACT DRAWINGS, ARE TO BE PROTECTED IN PLACE UNLESS OTHERWISE NOTED ON THE CONTRACT DRAWINGS. CONTRACTOR IS RESPONSIBLE FOR REPAIRING AND/OR REPLACING ALL DAMAGED STRUCTURES, FEATURES AND UTILITIES INCLUDING INCIDENTAL DAMAGES WITHIN 10 DAYS, OR THE SAME DAY FOR EMERGENCY SITUATIONS, AS DIRECTED BY THE ENGINEER.

3. CONTRACTOR SHALL USE EXTREME CAUTION WHEN WORKING ADJACENT OR AROUND EXISTING ABOVE GROUND UTILITIES, MONITORING WELLS, AND OIL WELLS. UTILITY LINES ARE UNDER HIGH PRESSURE AND SHOULD NOT BE DISTURBED AT ANY TIME.

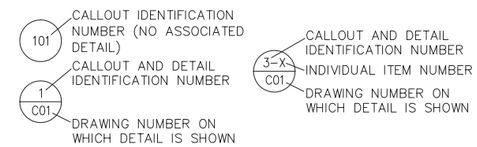

Horizontal Datum CCS '83 (Nad '83) Zone 5 Coordinates 1991.35 Epoch			
GPS PT#	NORTH	EAST	DESCRIPTIONS
5050	1729773.74	6494881.53	2" BRONZE DISK IN MONUMENT WELL (DOWN 0.7')
5057	1735078.63	6491397.60	LEAD AND SPIKE IN CONC. SLAB
5063	1732362.07	6493890.50	CHISELED X IN CONCRETE PEDESTRIAL
5062	1732825.64	6495219.83	RR SPIKE IN PAVEMENT
5013	1740154.00	6497593.20	2.25" BRONZE DISK IN MON WELL
5016	1738566.04	6497667.27	SPIKE AND WASHER IN PAVEMENT
5046	1731039.27	6496588.88	RR SPIKE IN PAVEMENT
5165	1728774.77	6498783.99	STAMPED X ON BALLARD
5020	1735795.92	6495942.11	2" BRONZE DISK IN MON. WELL
5014	1738410.05	6494880.78	RR SPIKE IN PAVEMENT
5144	1743336.24	6494973.78	2.5" BRONZE DISK IN CORNET TRAFFIC ISLAND

Vertical Datum: NOV-2005 Adj. NGVD29 MLLW (ft)	
PT#	Elevation
2178	29.17
2318	13.94
2415	15.33
2404	-3.00

BASEMAP SOURCE: PORT OF LONG BEACH ENGINEERING DEPARTMENT
SURVEY DATA SOURCE: PORT OF LONG BEACH ENGINEERING DEPARTMENT

FN: D1951T05

MARK	DATE	BY	REVISIONS

DRAWN BJM DATE 02/08
DESIGNED NB P.E. NO. C-41325
PROJ. MGR. EU P.E. NO.
SECT. HEAD DJS P.E. NO. C-46837
CHIEF HARBOR ENGR. P.E. NO. C-25677 DATE

THE PORT OF LONG BEACH
925 HARBOR PLAZA P.O. BOX 570 LONG BEACH CALIFORNIA 90801 TEL. (562) 437-0041

PORT OF LONG BEACH
PORTWIDE SWPP & DUST CONTROL PROGRAM
GENERAL NOTES (SHEET 2 OF 2)

SCALE AS SHOWN SHEET 5 OF 165
SPECIFICATION NUMBER HD-S2299A
DRAWING NUMBER HD 10-1951-T05

O2

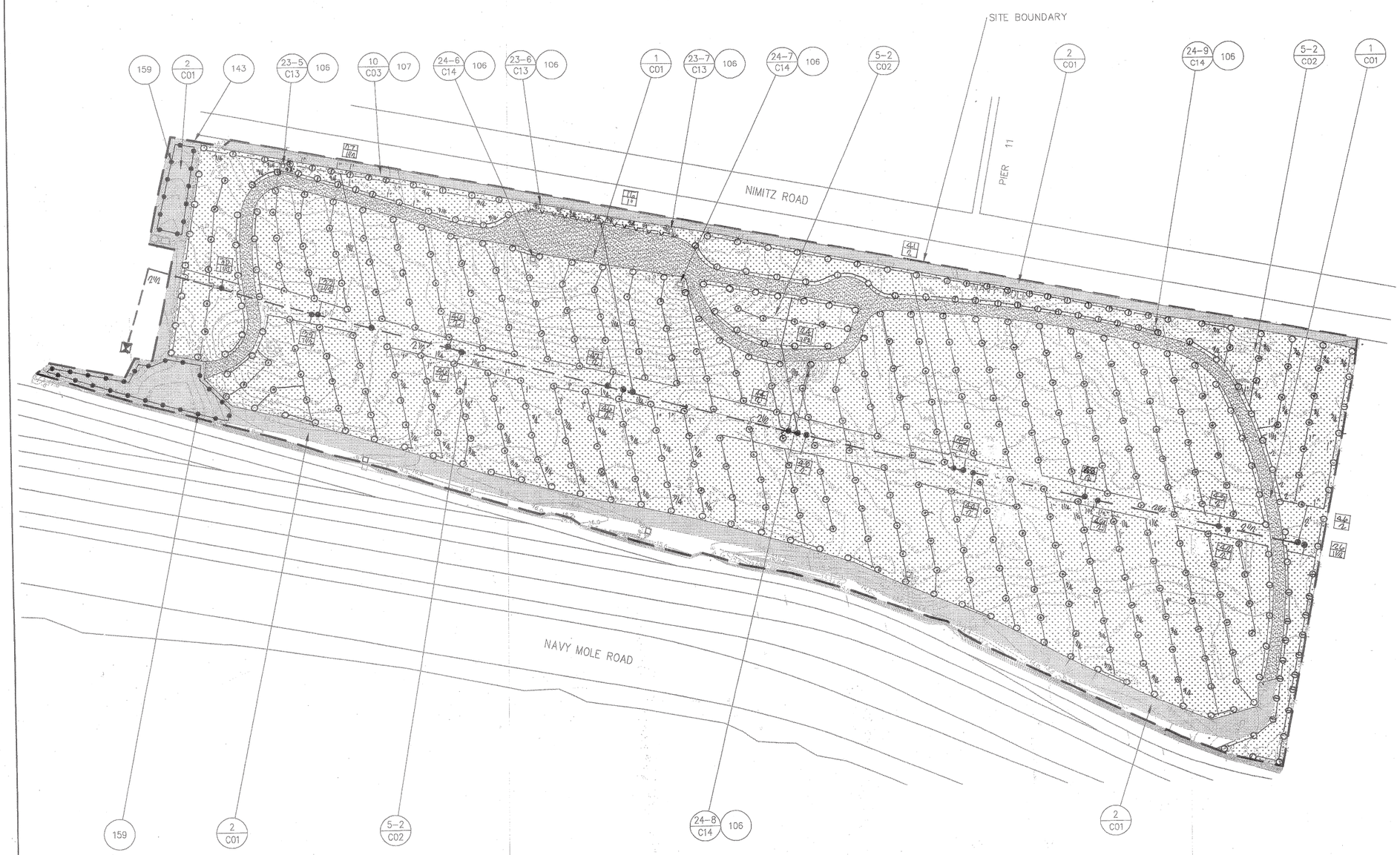

NOTES

- 1/C01 — CONSTRUCT RECYCLED BASE ROCK ACCESS ROAD
- 2/C01 — PLACE 3/4-INCH MINUS RECYCLED BASE ROCK, 3-INCH THICKNESS
- 5-X/C02 — HYDROSEED
- 10/C03 — CONSTRUCT CHAIN LINK FENCE FROM CONTROL POINTS N3-0056 TO N3-0024 AND JOIN TO EXISTING FENCE AT CONTROL POINT N3-0024
- 23-X/C13 — CONSTRUCT TYPE III 3-SIDED INVERTED CURB
- 24-X/C14 — CONSTRUCT TYPE I 4-SIDED INVERTED CURB
- 106 — DEMOLISH TEMPORARY BMP, INCLUDING CMU BLOCKS, STAKES AND WIRE MESH, AND BALLAST. USE MATERIAL FOR THIS PROJECT AT OTHER LOCATION, LEGALLY DISPOSE OF OR RECYCLE OFF-SITE
- 107 — REMOVE EXISTING FENCE FROM CONTROL POINTS N3-0056 TO N3-0024 AND REUSE OR RECYCLE OFF-SITE
- 143 — SITE ACCESS DURING CONSTRUCTION
- 159 — EVENLY SPREAD EXCAVATED SOIL AND GRAVEL GENERATED DURING SITE WORK ON THIS SITE IN THIS AREA PRIOR TO RECYCLED BASE ROCK PLACEMENT

LEGEND

- 13.4 — TOPOGRAPHIC ISOELEVATION LINE (FEET ABOVE MEAN LOWER LOW WATER)
- SITE BOUNDARY
- LIMITS OF EXCAVATED SOIL AND GRAVEL PLACEMENT
- —X—X— CHAIN LINK FENCE
- 3/4-INCH MINUS RECYCLED BASE ROCK
- HYDROSEED
- NEW ACCESS ROAD

106 — CALLOUT IDENTIFICATION NUMBER (NO ASSOCIATED DETAIL)

1/C01 — CALLOUT AND DETAIL IDENTIFICATION NUMBER; DRAWING NUMBER ON WHICH DETAIL IS SHOWN

5-X/C02 — CALLOUT AND DETAIL IDENTIFICATION NUMBER; INDIVIDUAL ITEM NUMBER; DRAWING NUMBER ON WHICH DETAIL IS SHOWN

PIER T NAVY MOLE WEST – AREA N.3

0 50 100 150
SCALE: 1" = 50'

REGISTERED PROFESSIONAL ENGINEER NOWLAND D. BAMBARD No. 41325 ~~June 30, 2009~~ CIVIL ENGINEERING STATE OF CALIFORNIA 2/28/08

EarthTech
A tyco International Ltd. Company
File: D1950N3.2

MARK	DATE	BY	REVISIONS

DRAWN CWC DATE 02/08
DESIGNED NB P.E. NO. C-41325
PROJ. MGR. EU P.E. NO.
SECT. HEAD DJS P.E. NO. C-46837

CHIEF HARBOR ENGR. P.E. NO. C-25677 DATE 2/28/08

THE PORT OF LONG BEACH
925 HARBOR PLAZA P.O. BOX 570 LONG BEACH CALIFORNIA 90801 TEL. (562) 437-0041

POLB – PORTWIDE SWPP & DUST CONTROL PROGRAM
PIER T NAVY MOLE WEST – AREA N.3
DESIGN PLAN

SCALE 1"=50' SHEET 82 OF 165
SPECIFICATION NUMBER HD-S2299A
DRAWING NUMBER HD 10-1951-N3.2

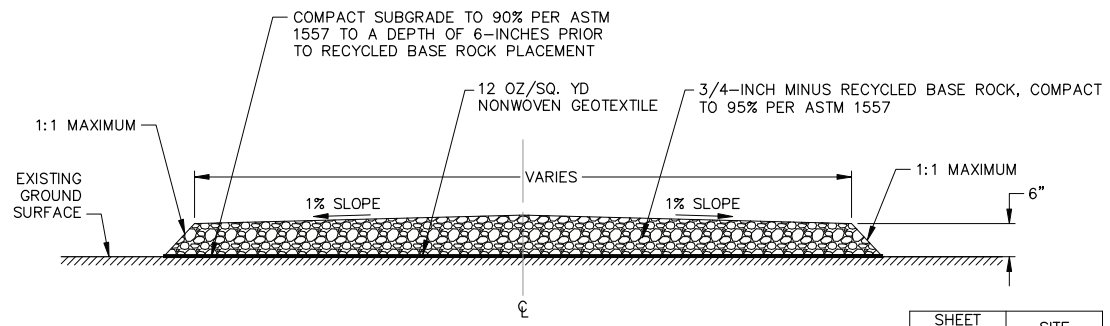

1 RECYCLED BASE ROCK ACCESS ROAD

NOT TO SCALE

SHEET NUMBER	SITE
A1.2	A1
B1B2.3	B1/B2
B1B2.4	B1/B2
B5.8	B5
N2-1.2	N2-1
N3.2	N3
S2-1.2	S2-1
S2-2.2	S2-2
S3-1.2	S3-1
T1.2	T1

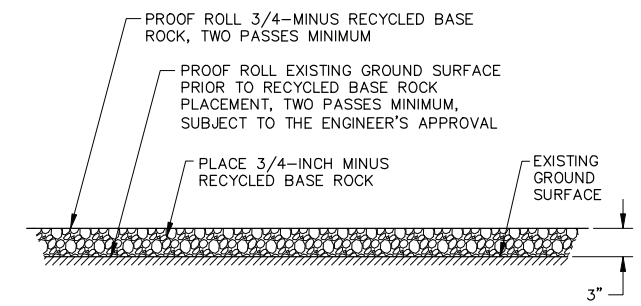

2 3/4-INCH MINUS RECYCLED BASE ROCK COVER

NOT TO SCALE

SHEET NUMBER	SITE
A1.2	A1
A2.2	A2
B1B2.3	B1/B2
B1B2.4	B1/B2
B3.2	B3
B4.3	B4
B4.4	B4
B5.5	B5
B5.6	B5
B5.7	B5
B5.8	B5
C1.2	C1
C2.2	C2
D1D2.2	D1/D2
N2-1.2	N2-1
N2-2.2	N2-2
N3.2	N3
S2-2.2	S2-2
T1.2	T1
T2.2	T2

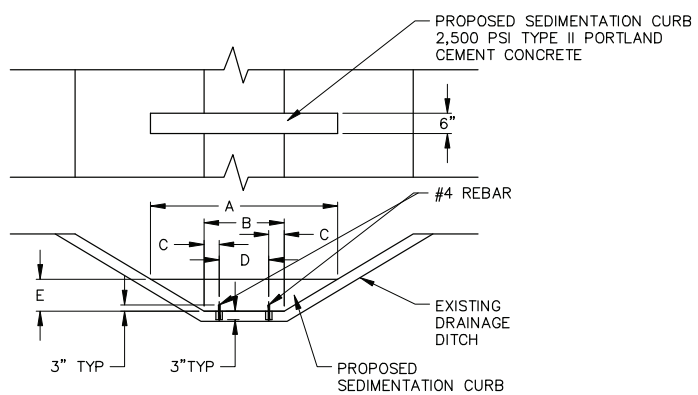

3 SEDIMENTATION CURB

NOT TO SCALE

ITEM NUMBER	SHEET NUMBER	SITE	DIMENSIONS (FT-IN)					NOTES
			A	B	C	D	E	
3-1	A1.2	A1	6-3	4-1	1-0	2-1	0-4	CONSTRUCT SEDIMENTATION CURB 4'-0" FROM HEADWALL
3-2	B1B2.4	B1/B2	2-6	1-8	0-6	0-8	0-4	CONSTRUCT SEDIMENTATION CURB 2'-0" FROM EDGE OF CATCH BASIN GRATE
3-3	B1B2.4	B1/B2	2-6	1-8	0-6	0-8	0-4	CONSTRUCT SEDIMENTATION CURB 2'-0" FROM EDGE OF CATCH BASIN GRATE
3-4	D1D2.2	D1/D2	6-0	5-6	1-6	2-0	0-6	INSTALL FLUME FILTER AT CENTER OF SEDIMENTATION CURB - SEE DETAIL 45
3-5	S3-1.2	S3-1	7-0	6-0	1-5	3-0	0-6	CONSTRUCT SEDIMENTATION CURB 3'-0" FROM CATCH BASIN EDGE

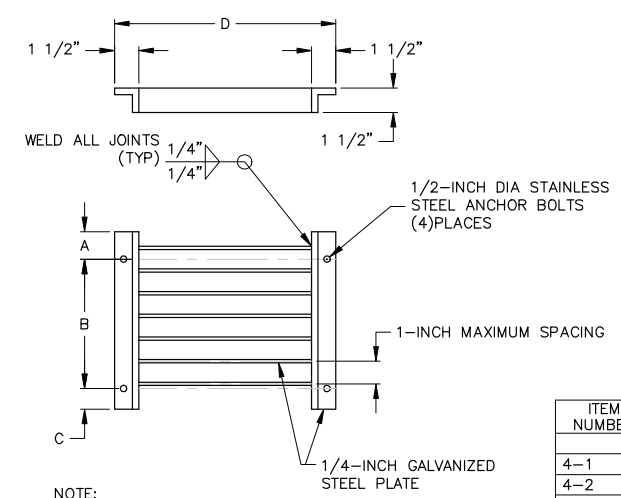

NOTE:
1. IT IS THE RESPONSIBILITY OF THE CONTRACTOR TO VERIFY FIELD MEASUREMENTS PRIOR TO TRASH SCREEN FABRICATION

ITEM NUMBER	SHEET NUMBER	SITE	DIMENSIONS (FT-IN)			
			A	B	C	D
4-1	A1.2	A1	0-2	1-2	0-2	1-11
4-2	A1.2	A1	0-2	1-4	0-2	1-11
4-3	A2.2	A2	0-3	0-6	0-3	1-0
4-4	D1D2.2	D1/D2	0-3	0-6	0-3	1-0
4-5	N2-1.2	N2-1	0-3	1-6	0-3	1-9

4 TRASH SCREEN - HEADWALL MOUNTED

NOT TO SCALE

EarthTech
A tyco International Ltd. Company
FN: D1951C01

MARK	DATE	BY	REVISIONS

DRAWN BJM DATE 02/08
DESIGNED NB P.E. NO. C-41325
PROJ. MGR. EU P.E. NO.
SECT. HEAD DJS P.E. NO. C-46837
CHIEF HARBOR ENGR. P.E. NO. C-25677 DATE

THE PORT OF LONG BEACH
925 HARBOR PLAZA P.O. BOX 570 LONG BEACH CALIFORNIA 90801 TEL. (562) 437-0041

PORT OF LONG BEACH
PORTWIDE SWPP & DUST CONTROL PROGRAM
DESIGN DETAILS 1 THRU 4

SCALE NTS SHEET 119 OF 165
SPECIFICATION NUMBER HD-S2299A
DRAWING NUMBER HD 10-1951-C01

D1951C01.0208.PLT

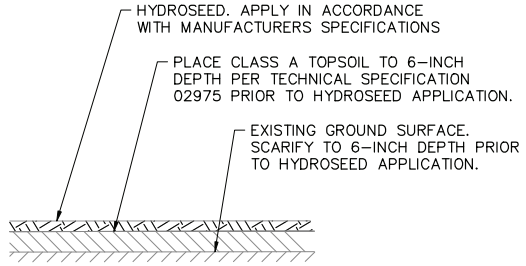

LEVEL-WITH TOP SOIL

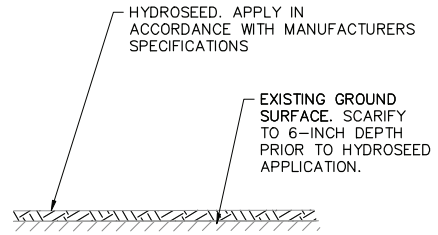

LEVEL-WITHOUT TOP SOIL

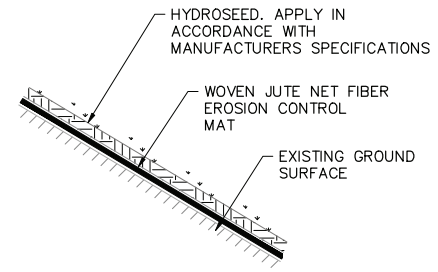

ON SLOPE

NOTES
1. DETAIL APPLIES TO SLOPE 3:1 OR GREATER
2. STAPLE JUTE NET IN PLACE IN ACCORDANCE WITH MANUFACTURER'S RECOMMENDATIONS.

ITEM NUMBER	SHEET NUMBER	SITE	HYDROSEED MIX	NOTES
5-1	B3.2	B3	A	REFER TO TECHNICAL SPECIFICATION 02975
5-1	B4.3	B4	A	REFER TO TECHNICAL SPECIFICATION 02975
5-1	S3-1.2	S3-1	A	REFER TO TECHNICAL SPECIFICATION 02975
5-1	S3-2.2	S3-2	A	REFER TO TECHNICAL SPECIFICATION 02975
5-2	N2-1.2	N2-1	B	REFER TO TECHNICAL SPECIFICATION 02975
5-2	N3.2	N3	B	REFER TO TECHNICAL SPECIFICATION 02975
5-2	T1.2	T1 STRIP	B	REFER TO TECHNICAL SPECIFICATION 02975
5-3	A1.2	A1	C	PLACE CLASS A TOPSOIL TO A DEPTH OF 6-INCHES PER TECHNICAL SPECIFICATION 02975 PRIOR TO HYDROSEED APPLICATION
5-3	A2.2	A2	C	REFER TO TECHNICAL SPECIFICATION 02975
5-3	B1B2.3	B1/B2	C	PLACE CLASS A TOPSOIL TO A DEPTH OF 6-INCHES PER TECHNICAL SPECIFICATION 02975 PRIOR TO HYDROSEED APPLICATION
5-3	B1B2.4	B1/B2	C	PLACE CLASS A TOPSOIL TO A DEPTH OF 6-INCHES PER TECHNICAL SPECIFICATION 02975 PRIOR TO HYDROSEED APPLICATION
5-3	B5.8	B5	C	REFER TO TECHNICAL SPECIFICATION 02975
5-3	S2-1.2	S2-1	C	REFER TO TECHNICAL SPECIFICATION 02975
5-3	S2-2.2	S2-2	C	PLACE CLASS A TOPSOIL TO A DEPTH OF 6-INCHES PER TECHNICAL SPECIFICATION 02975 PRIOR TO HYDROSEED APPLICATION
5-3	T1.2	T1 HORSESHOE	C	REFER TO TECHNICAL SPECIFICATION 02975

5 HYDROSEED
NOT TO SCALE

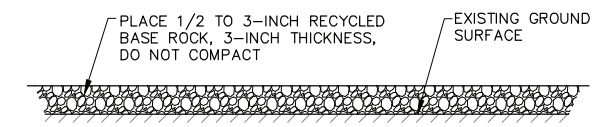

SHEET NUMBER	SITE
A1.2	A1
A2.2	A2
B1B2.3	B1/B2
B1B2.4	B1/B2
B3.2	B3
B4.3	B4
B4.4	B4
B5.5	B5
C1.2	C1
C2.2	C2
D1D2.2	D1/D2
S2-2.2	S2-2
S3-1.2	S3-1
S3-2.2	S3-2
T1.2	T1
T2.2	T2

6 1/2 TO 3-INCH RECYCLED BASE ROCK COVER
NOT TO SCALE

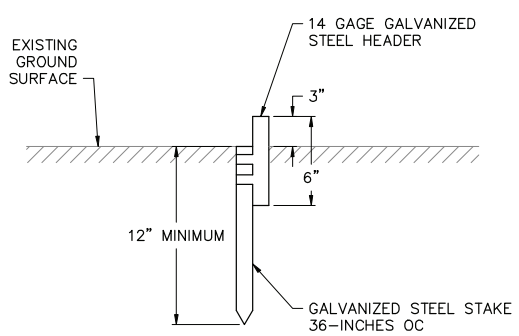

SHEET NUMBER	SITE
A1.2	A1
B1B2.3	B1/B2
B1B2.4	B1/B2
B5.7	B5
B5.8	B5
C1.2	C1
C2.2	C2
D1D2.2	D1/D2
B4.4	B4
S3-1.2	S3-1

7 STEEL HEADER
NOT TO SCALE

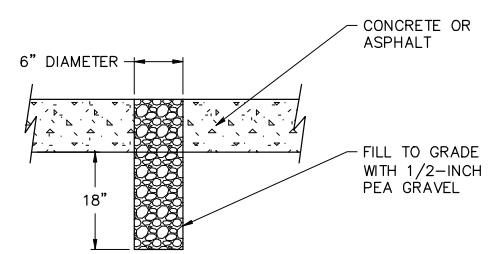

8 INFILTRATION CORE HOLE
NOT TO SCALE

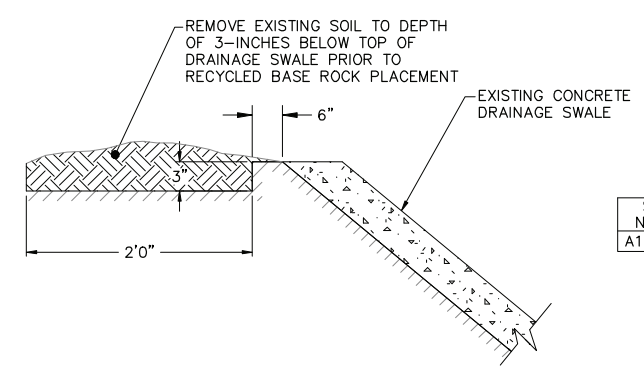

SHEET NUMBER	SITE
A1.2	A1

9 SOIL REMOVAL ADJACENT TO CONCRETE DRAINAGE SWALE
NOT TO SCALE

ITEM NUMBER	SHEET NUMBER	SITE	DIMENSIONS		NOTES
			# HOLES	FT-IN OC	
8-1	A1.2	A1	9	20-0	CORE FIRST HOLE 5-FEET FROM SEDIMENTATION CURB
8-2	B1B2.4	B1/B2	12	20-0	CORE FIRST HOLE 5-FEET FROM SEDIMENTATION CURB
8-3	B1B2.4	B1/B2	10	20-0	CORE FIRST HOLE 5-FEET FROM SEDIMENTATION CURB

EarthTech
A tyco International Ltd. Company
FN: 2185G02

MARK	DATE	BY	REVISIONS

DRAWN BJM DATE 02/08
DESIGNED NB P.E. NO. C-41325
PROJ. MGR. FU P.E. NO.
SECT. HEAD DJS P.E. NO. C-46837
CHIEF HARBOR ENGR. P.E. NO. C-25677 DATE

THE PORT OF LONG BEACH
925 HARBOR PLAZA P.O. BOX 570 LONG BEACH CALIFORNIA 90801 TEL. (562) 437-0041

PORT OF LONG BEACH
PORTWIDE SWPP & DUST CONTROL PROGRAM
DESIGN DETAILS 5 THRU 9

SCALE NTS SHEET 120 OF 165
SPECIFICATION NUMBER HD-S2299A
DRAWING NUMBER HD 10-1951-C02

D1951C02.0208.PLT

O5

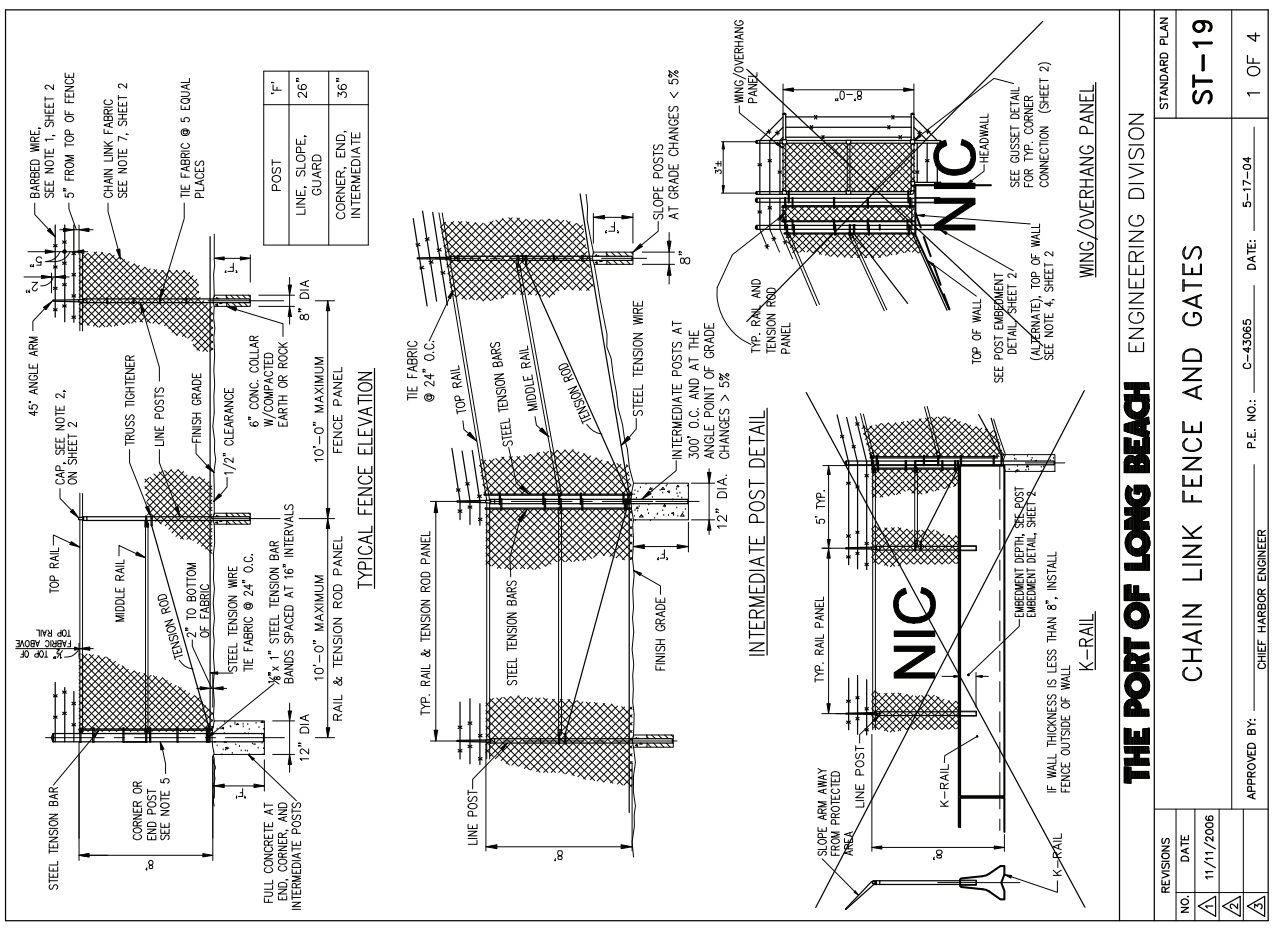

THE PORT OF LONG BEACH ENGINEERING DIVISION

STANDARD PLAN

CHAIN LINK FENCE AND GATES

ST-19

1 OF 4

REVISIONS	
NO.	DATE
1	11/11/2006
2	
3	

APPROVED BY: CHIEF HARBOR ENGINEER P.E. NO.: C-43065 DATE: 5-17-04

SHEET NUMBER	SITE
B1B2.4	B1/B2
B3.2	B3
B4.3	B4
B4.4	B4
N2-1.2	N2-1
N2-2.2	N2-2
N3.2	N3
S2-1.2	S2-1
S2-2.2	S2-2

10 CHAIN LINK FENCE
NOT TO SCALE
POLB STD PLAN ST-19

EarthTech
A tyco International Ltd. Company
File: D1951C03

SCALE NTS
SHEET 121 OF 165
SPECIFICATION NUMBER HD-S2299A
DRAWING NUMBER HD 10-1951-C03

PORT OF LONG BEACH
PORTWIDE SWPP & DUST CONTROL PROGRAM
DESIGN DETAIL 10

THE PORT OF LONG BEACH
925 HARBOR PLAZA P.O. BOX 570 LONG BEACH CALIFORNIA 90801 TEL. (562) 437-0041

DRAWN BJM DATE 02/08
DESIGNED NB P.E. NO. C-41325
PROJ. MGR. FU P.E. NO.
SECT. HEAD DJS P.E. NO. C-46837
CHIEF HARBOR ENGR. P.E. NO. C-25677 DATE

MARK	DATE	BY	REVISIONS

D1951C13.0208.PLT

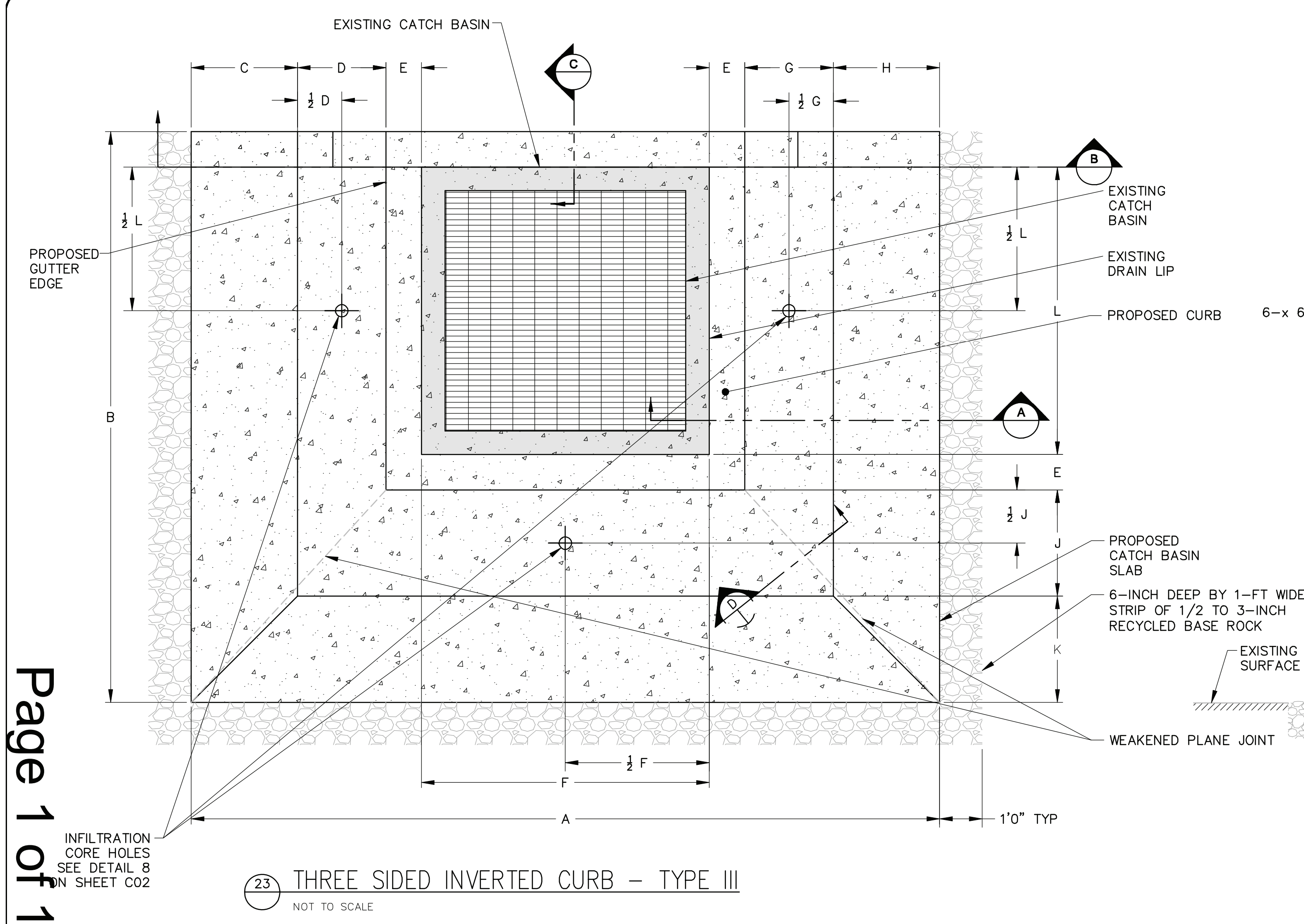

23 THREE SIDED INVERTED CURB – TYPE III

NOT TO SCALE

ITEM NUMBER	SHEET NUMBER	SITE	DIMENSIONS (FT-IN)														
			A	B	C	D	E	F	G	H	J	K	L	M	N	P
23–1	B1B2.3	B1/B2	13–2.5	9–7	3–0	2–0	0–6.5	2–1.5	2–0	3–0	2–0	3–0	4–1	3–1.5	0–6	5–0.5
23–2	B5.6	B5	17–0	11–0	4–0	2–0	0–6	4–0	2–0	4–0	2–0	4–0	4–0	5–0	0–6	6–0
23–3	C2.2	C2	13–4	7–6	2–0	2–0	0–6	4–4	2–0	2–0	2–0	2–0	2–6	4–4	0–6	4–6
23–4	N2–1.2	N2–1	14–7	9–5	3–0	2–0	0–6	3–7	2–0	3–0	2–0	3–0	3–5	4–7	0–6	5–0
23–5	N3.2	N3	14–2	9–2	3–0	2–0	0–6	3–2	2–0	3–0	2–0	3–0	3–2	4–2	0–6	5–0
23–6	N3.2	N3	14–2	9–2	3–0	2–0	0–6	3–2	2–0	3–0	2–0	3–0	3–2	4–2	0–6	5–0
23–7	N3.2	N3	14–2	9–2	3–0	2–0	0–6	3–2	2–0	3–0	2–0	3–0	3–2	4–2	0–6	5–0

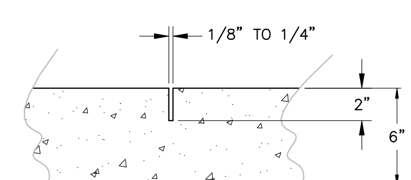

SECTION D – WEAKENED PLANE JOINT

NOT TO SCALE

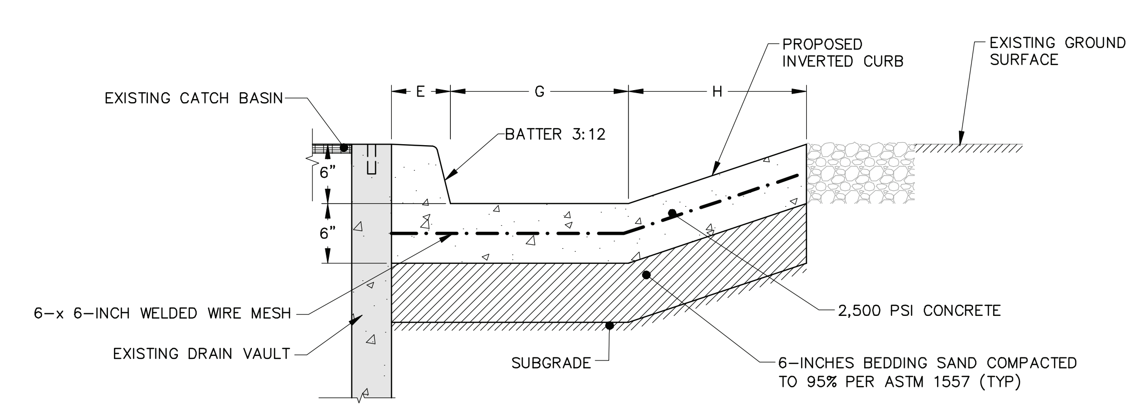

SECTION A – CURB

NOT TO SCALE

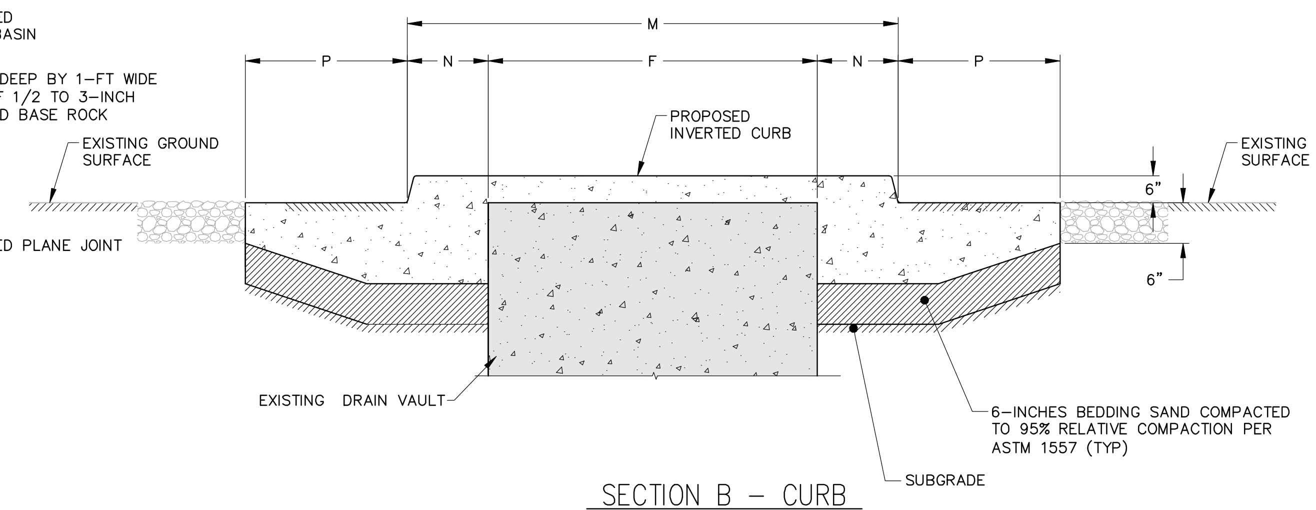

SECTION B – CURB

NOT TO SCALE

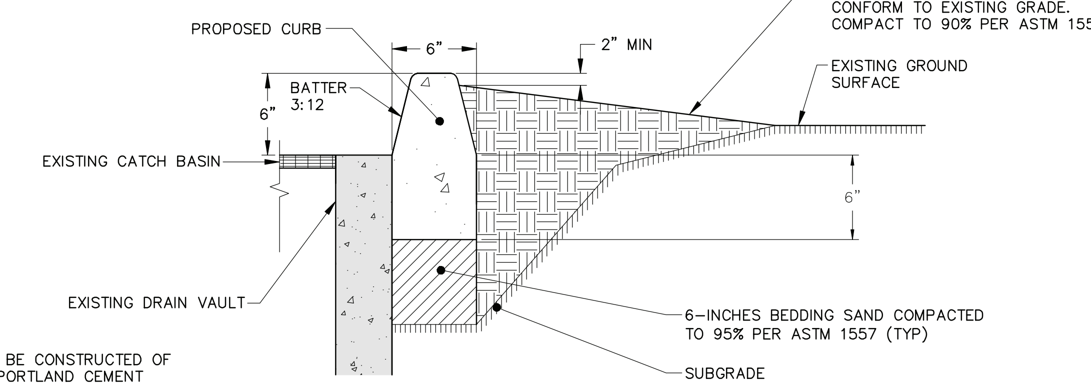

SECTION C – INVERTED CURB

NOT TO SCALE

NOTES:
1. INVERTED CURB TO BE CONSTRUCTED OF 2,500 PSI TYPE II PORTLAND CEMENT CONCRETE.
2. ALL EXPOSED CORNERS TO BE ROUNDED WITH A 1/2–INCH RADIUS.

EarthTech
A tyco International Ltd. Company

MARK	DATE	BY	REVISIONS

DRAWN BJM DATE 02/08
DESIGNED NB P.E. NO. C-41325
PROJ. MGR. EU P.E. NO.
SECT. HEAD DJS P.E. NO. C-46837
CHIEF HARBOR ENGR. P.E. NO. C-25677 DATE

THE PORT OF LONG BEACH
925 HARBOR PLAZA P.O. BOX 570 LONG BEACH CALIFORNIA 90801 TEL. (562) 437-0041

PORT OF LONG BEACH
PORTWIDE SWPP & DUST CONTROL PROGRAM
DESIGN DETAIL 23

SCALE NTS SHEET 131 OF 165
SPECIFICATION NUMBER HD-S2299A
DRAWING NUMBER HD 10-1951-C13

Page 1 of 1

O7

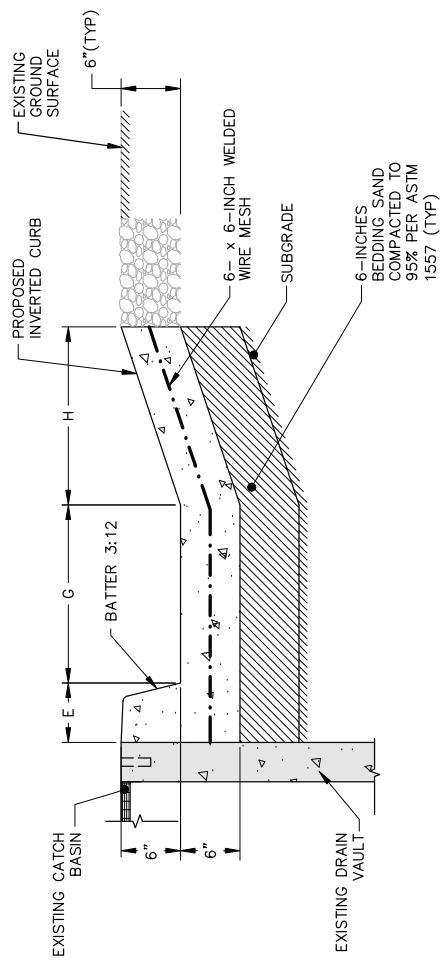

SECTION A – INVERTED CURB

NOT TO SCALE

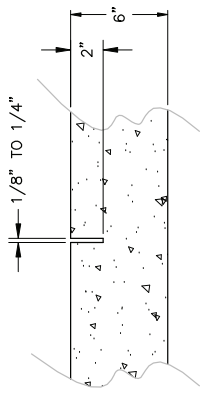

SECTION B – WEAKENED PLANE JOINT

NOT TO SCALE

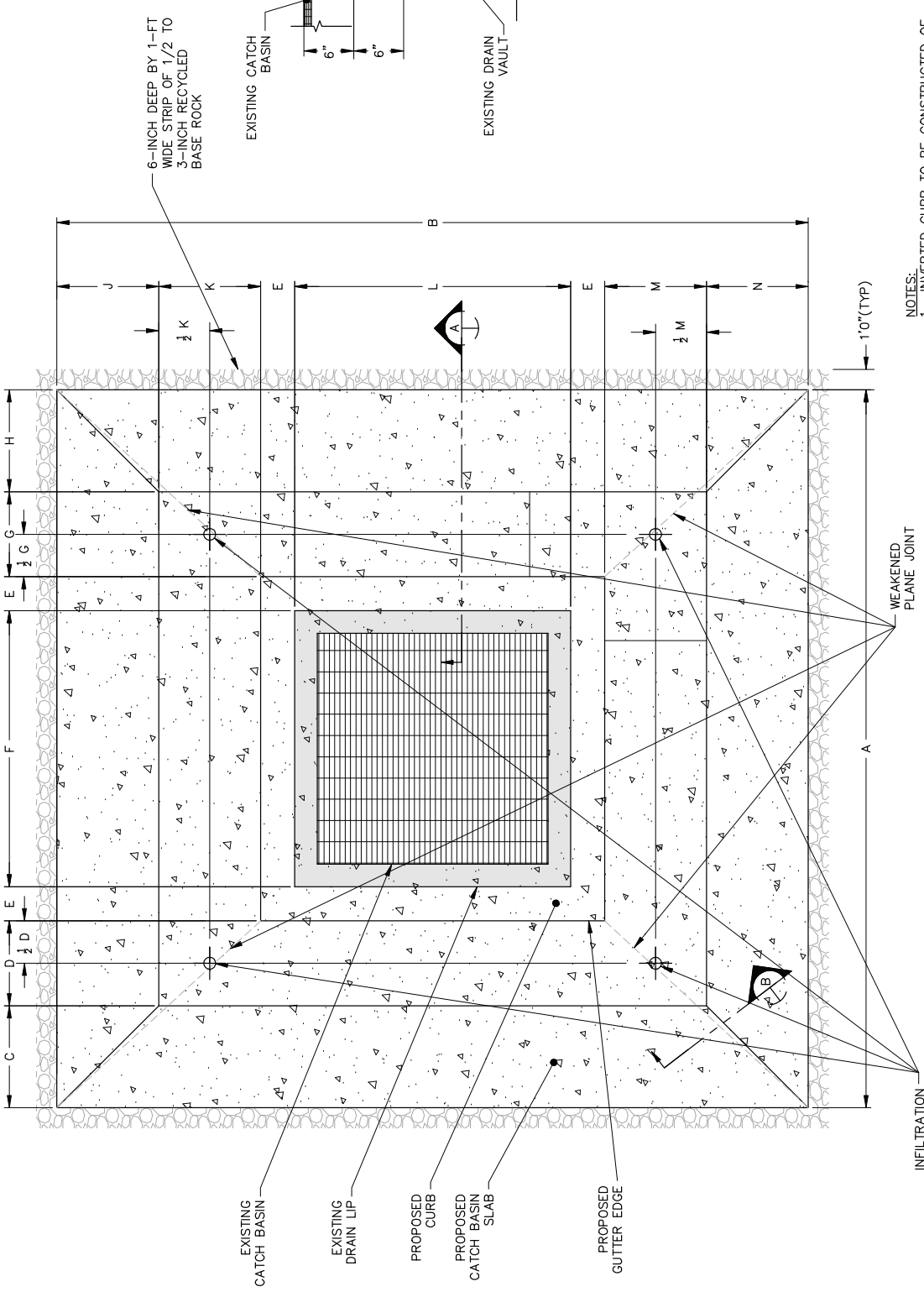

24 FOUR SIDED INVERTED CURB – TYPE I

NOT TO SCALE

NOTES:
1. INVERTED CURB TO BE CONSTRUCTED OF 2,500 PSI TYPE II PORTLAND CEMENT CONCRETE.
2. ALL EXPOSED CORNERS TO BE ROUNDED WITH A 1/2-INCH RADIUS.

ITEM NUMBER	SHEET NUMBER	SITE	DIMENSIONS (FT-IN)																	NOTES
			A	B	C	D	E	F	G	H	J	K	L	M	N					
24-1	B3.2	B3	14-2	15-1	3-0	2-0	0-6	3-2	2-0	3-0	3-0	2-0	4-1	2-0	3-0					
24-2	B4.3	B4	14-4.5	15-2	3-0	2-0	0-6	3-4.5	2-0	3-0	3-0	2-0	4-2	2-0	3-0	SAWCUT AND DEMOLISH EXISTING CONCRETE PAD AROUND CATCH BASIN				
24-3	B4.4	B4	13-10.5	11-10.5	2-6	2-0	0-6	2-10.5	2-0	3-0	2-0	1-0	2-10.5	2-0	3-0	SAWCUT AND DEMOLISH EXISTING CONCRETE PAD AROUND CATCH BASIN				
24-4	B5.7	B5	14-6.5	13-3.5	2-6	2-0	0-6	4-6.5	2-0	2-6	2-6	2-0	3-3.5	2-0	2-6					
24-5	B5.7	B5	14-6.5	13-3.5	3-0	2-0	0-6	4-6.5	2-0	2-6	2-6	2-0	3-3.5	2-0	2-6					
24-6	N3.2	N3	15-7	15-1	3-0	2-0	0-6	4-7	2-0	3-0	3-0	2-0	4-1	2-0	3-0					
24-7	N3.2	N3	15-0	16-0	3-0	2-0	0-6	4-0	2-0	3-0	3-0	2-0	5-0	2-0	3-0					
24-8	N3.2	N3	14-2	14-2	3-0	2-0	0-6	3-2	2-0	3-0	3-0	2-0	3-2	2-0	3-0					
24-9	N3.2	N3	14-2	14-2	3-0	2-0	0-6	3-2	2-0	3-0	3-0	2-0	3-2	2-0	3-0					
24-10	S2-2.2	S2-2	26-0	26-0	3-0	5-0	0-6	9-0	5-0	3-0	3-0	5-0	9-0	5-0	3-0	EXISTING DRAIN LIP NOTED IN DETAIL IS CONCRETE PAD SURROUNDING EXISTING CIRCULAR DROP INLET				
24-11	S2-2.2	S2-2	26-0	23-6	3-0	5-0	0-6	9-0	5-0	3-0	3-0	5-0	9-0	2-6	3-0	DIMENSIONS M AND N LOCATED BETWEEN CATCH BASIN AND FENCE. EXISTING DRAIN LIP NOTED IN DETAIL IS CONCRETE PAD SURROUNDING EXISTING CIRCULAR DROP INLET				
24-12	S2-2.2	S2-2	22-0	22-0	3-0	5-0	0-6	9-0	2-0	2-0	3-0	5-0	9-0	2-0	2-0	DIMENSIONS G, H, M, AND N LOCATED BETWEEN CATCH BASIN AND FENCE. EXISTING DRAIN LIP NOTED IN DETAIL IS CONCRETE PAD SURROUNDING EXISTING CIRCULAR DROP INLET				

EarthTech
A tyco International Ltd. Company
File: D1951C14

SCALE NTS
SHEET 132 OF 165
SPECIFICATION NUMBER HD-S2299A
DRAWING NUMBER HD 10-1951-C14

PORT OF LONG BEACH
PORTWIDE SWPP & DUST CONTROL PROGRAM
DESIGN DETAIL 24

THE PORT OF LONG BEACH
925 HARBOR PLAZA P.O. BOX 570 LONG BEACH CALIFORNIA 90801 TEL. (562) 437-0041

DRAWN RJM DATE 02/08
DESIGNED NB P.E. NO. C-41325
PROJ. MGR. EU P.E. NO.
SECT. HEAD DJS P.E. NO. C-46837

CHIEF HARBOR ENGR. P.E. NO. C-25677 DATE

MARK	DATE	BY	REVISIONS