FTEV 99-1015B-G
REPLACE WATER MAINS & VALVES
PHASE B-G
HURLBURT FIELD, FL

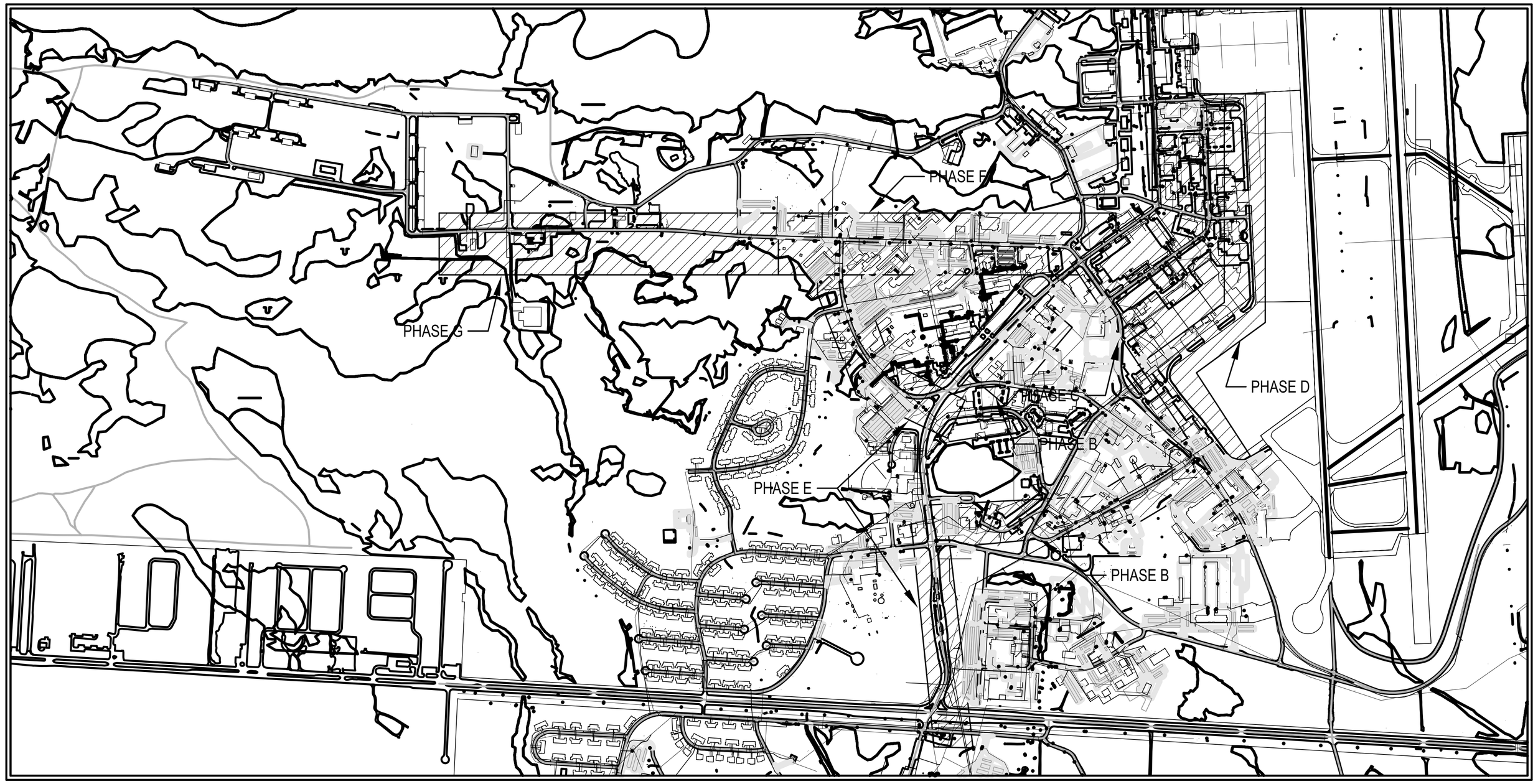

LOCATION MAP

SCALE 1" = 600'

DRAWING INDEX

TS	TITLE SHEET, MAPS, AND INDEX OF DRAWINGS
G001	GENERAL NOTES AND LEGEND
G002	SHEET KEY
C100	PHASE B WATER DISTRIBUTION
C101	PHASE B WATER DISTRIBUTION
C102	PHASE B WATER DISTRIBUTION
C103	PHASE B WATER DISTRIBUTION
C104	PHASE C WATER DISTRIBUTION
C105	PHASE C WATER DISTRIBUTION
C106	PHASE C WATER DISTRIBUTION
C107	PHASE D WATER DISTRIBUTION
C108	PHASE D WATER DISTRIBUTION
C109	PHASE E WATER DISTRIBUTION
C110	PHASE E WATER DISTRIBUTION
C111	PHASE E WATER DISTRIBUTION
C112	PHASE F WATER DISTRIBUTION
C113	PHASE F WATER DISTRIBUTION
C114	PHASE G WATER DISTRIBUTION
C115	PHASE G WATER DISTRIBUTION
C116	PHASE G WATER DISTRIBUTION
C500	DETAILS
C501	DETAILS

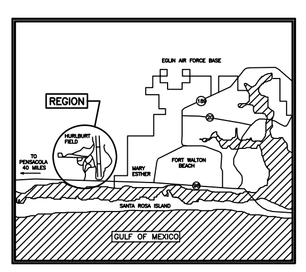

NOTE:
ALL WORK TO BE IN ACCORDANCE WITH HURLBURT FIELD "BASE MASTER SPECIFICATIONS" EXCEPT AS NOTED IN THESE PLANS.

THE APPROVAL AND COORDINATION SIGNATURES APPEARING IN THE TITLE BLOCK ON THIS SHEET CONSTITUTE APPROVAL OF ALL DRAWINGS LISTED IN THE INDEX.

SOCES/CECO OFFICE FORM 002 (JAN 96)
STANDARD D LAYOUT (24" X 36")

ENVIRONMENTAL | FIRE CHIEF | MAINTENANCE ENGINEER APPROVED | SAFETY | REV # | DATE | SECURITY POLICE | DESCRIPTION | 16 OSS/OC APP'D

HURLBURT FIELD
REPLACE WATER MAINS & VALVES
PHASE B-G
TITLE SHEET, MAPS,

CHIEF ENGINEER APPROVED

CIVIL ENGINEER

ENVIRONMENTAL | COMMUNICATION | CEO | BIO-ENVIRONMENTAL

AIR FORCE SPECIAL OPERATIONS COMMAND
1 SPECIAL OPERATIONS CIVIL ENGINEER SQUADRON
HURLBURT FIELD, FLORIDA

USING AGENCY

DATE: FEBRUARY 2008
DESIGNED BY: MDL
DRAWN BY: RGG/PLG
BUILDING NO.: 39841.03
PROJECT NO.: FTEV 99-1015B-G
SHEET REF.: TS
SHEET NO.:

PROJECT MANAGER

GENERAL NOTES:

1. IT IS RECOMMENDED THAT THE CONTRACTOR VISIT THE SITE AND FAMILIARIZE HIMSELF WITH THE PROJECT PRIOR TO SUBMITTING A BID.

2. THE LOCATIONS OF EXISTING UNDERGROUND UTILITIES SHOWN ON THESE PLANS ARE APPROXIMATE. IT IS THE CONTRACTOR'S RESPONSIBILITY TO LOCATE ALL EXISTING UTILITIES WITHIN THE CONSTRUCTION AREA AND PROVIDE FOR THEIR PROTECTION DURING CONSTRUCTION.

3. THE CONTRACTOR SHALL NOTIFY HURLBURT FIELD ENGINEERING–1SOCES IMMEDIATELY OF ANY CONFLICTS BETWEEN CONTRACT DOCUMENTS AND EXISTING CONDITIONS. THESE DRAWINGS REPRESENT KNOWN STRUCTURES AND UTILITIES LOCATED IN THE PROJECT AREA. THE CONTRACTOR IS CAUTIONED THAT OTHER STRUCTURES AND UTILITIES, ABOVE OR BELOW GROUND, MAY BE ENCOUNTERED DURING THE COURSE OF THE PROJECT.

4. ALL SITEWORK MATERIALS AND CONSTRUCTION METHODS SHALL BE IN ACCORDANCE WITH THE TECHNICAL SPECIFICATIONS.

5. CONTRACTOR SHALL SAFETY–BARRICADE ALL EXCAVATIONS AND OTHER HAZARDS.

6. THE CONTRACTOR SHALL USE CONSTRUCTION TECHNIQUES SO AS TO MINIMIZE SOIL DISTURBANCE. THE CONTRACTOR SHALL EMPLOY THE USE OF SILT FENCES, HAY BALES, DITCHES, TURBIDITY BARRIERS OR WHATEVER MEANS ARE NECESSARY TO CONTROL EROSION AND SEDIMENTATION AT ALL TIMES. WATERS OF THE STATE AND ANY NEW DRAINAGE CONSTRUCTION SHALL BE PROTECTED DURING THE CONSTRUCTION PERIOD. EROSION CONTROL MEASURES SHALL BE INSTALLED PRIOR TO THE START OF CONSTRUCTION AND SHALL REMAIN UNTIL COMPLETION OF CONSTRUCTION AND ACCEPTANCE BY THE GOVERNMENT.

7. ADEQUATE PROVISIONS SHALL BE MADE FOR THE FLOW OF SEWERS, DRAINS, WATER COURSES AND OTHER UTILITIES ENCOUNTERED DURING CONSTRUCTION.

8. CONTRACTOR SHALL OBTAIN WORK CLEARANCE REQUEST (FORM AF103) PRIOR TO BEGINNING CONSTRUCTION AND/OR PROCEEDING WITH ANY EXCAVATION.

9. THE LOCATION OF NEW WATER MAINS MAY BE FIELD ADJUSTED TO AVOID IMPACTS TO EXISTING IMPROVEMENTS.

10. EACH PHASE IS INTENDED TO BE A FREE STANDING PROJECT AND PROVISIONS HAVE BEEN PROVIDED FOR CONNECTION TO SUBSEQUENT PHASES. CONSTRUCTION SHOULD OCCUR IN THE ORDER OF THE PHASES SHOWN IN THE PLANS.

11. THE EXISTING WATER MAINS IDENTIFIED FOR REPLACEMENT SHALL BE ABANDONED IN–PLACE. THE ENDS OF THE ABANDONED WATER MAINS SHALL BE GROUTED WITH CONCRETE.

12. EXISTING VALVE BOXES ON ABANDONED WATER MAINS SHALL BE REMOVED AFTER THE NEW SYSTEM IS PLACED INTO SERVICE. THE VALVE BOX CAVITIES SHALL BE FILLED WITH ASPHALT WHERE LOCATED IN ASPHALT PAVEMENT OR CONCRETE WHERE LOCATED IN CONCRETE PAVEMENT. VALVE BOX CAVITIES LOCATED IN GRASSED AREAS SHALL BE FILLED WITH SOIL. FILLING OF CAVITIES SHALL BE COORDINATED WITH 1 SOCES.

13. EXISTING FIRE HYDRANTS ON ABANDONED WATER MAINS SHALL BE REMOVED AND THE ABANDONED PIPE ENDS SHALL BE GROUTED WITH CONCRETE.

14. A NEW TEE AND VALVE SHALL BE PROVIDED ON THE NEW WATER MAIN FOR SERVICE LINES LARGER THAN 2 INCHES WITH SIZES AS SPECIFIED IN THE PLANS. TAPPING STRAPS SHALL BE PROVIDED FOR SERVICE LINES 2 INCHES AND SMALLER. TEES, VALVES, REDUCERS, HYDRANTS AND TAPPING STRAPS SHALL BE INSTALLED PRIOR TO PRESSURE TESTING OF THE NEW WATER DISTRIBUTION SYSTEM.

15. WHERE NEW HYDRANTS ARE LOCATED FURTHER THAN 40 FEET FROM THE NEW MAIN, A VALVE SHALL BE PROVIDED AT THE TEE THAT SERVES THE HYDRANT.

16. CONTRACTOR SHALL MINIMIZE DISRUPTION OF WATER SERVICES THROUGH COORDINATION WITH 1 SOCES. SERVICE LINES SHALL NOT BE CONNECTED TO THE NEW WATER DISTRIBUTION SYSTEMS UNTIL TESTING IS PERFORMED, APPROVED AND AUTHORIZATION FOR THE CONNECTION IS GRANTED BY 1 SOCES.

17. CONNECTIONS TO EXISTING SERVICES ARE SHOWN GRAPHICALLY. CONTRACTOR SHALL LOCATE SERVICE LINES PRIOR TO TEE OR TAPPING STRAP INSTALLATION. THE NEW DISTRIBUTION SYSTEMS SHALL BE DEFLECTED ABOVE OR BELOW THE EXISTING SYSTEMS, AS NECESSARY, IN ORDER TO MAINTAIN SERVICE TO THE EXISTING SYSTEMS DURING CONSTRUCTION.

18. CONNECTION TO EXISTING SYSTEMS SHALL ONLY OCCUR AFTER SUCCESSFUL TESTING HAS BEEN PERFORMED (PRESSURE AND BACTERIOLOGICAL) AND AUTHORIZATION TO PLACE INTO SERVICE HAS BEEN PROVIDED BY FDEP.

19. SIDEWALKS DISTURBED DURING CONSTRUCTION SHALL BE REPLACED IN KIND (4–INCH MINIMUM THICKNESS).

20. DISTURBED AREAS SHALL BE RESTORED TO ORIGINAL CONDITION OR BETTER, INCLUDING SODDED AND LANDSCAPED AREAS.

21. WATER SYSTEMS SHALL BE INSTALLED AND TESTED IN ACCORDANCE WITH THE TECHNICAL SPECIFICATIONS AND "RECOMMENDED STANDARDS FOR WATER WORKS", LATEST EDITION (AKA 10 STATES STANDARDS).

22. HYDROSTATIC TESTS SHALL BE PERFORMED AT NO LESS THAT 150 PSI FOR 2 HOURS. TESTING EQUIPMENT SHALL CONSIST OF A WATER SOURCE, PRESSURE PUMP, WATER METER TO MEASURE LOSS, CHECK VALVE, 250 PSI PRESSURE GAUGE, PRESSURE RECORDER EQUIPPED WITH 24–HOUR CHART AND ASSOCIATED PIPING, VALVES AND FITTINGS. FOR ACCEPTANCE, LEAKAGE SHALL NOT EXCEED THE FOLLOWING:

LINE SIZE	GALLONS PER 1000 FT PER HOUR
2"	0.15
3"	0.23
4"	0.40
6"	0.45
8"	0.60
10"	0.75

23. THE EXISTING WATER MAINS ARE A TRANSITE MATERIAL THAT CONTAINS ASBESTOS. CONTRACTOR SHALL TAKE APPROPRIATE CARE WHEN CUTTING THE PIPE AND DISPOSING OF WASTE.

24. ALL MECHANICAL JOINTS SHALL USE MEGA LUGS w/GASKET.

25. NO OPEN TRENCHES SHALL BE LEFT OVER NIGHT IN DRIVING LANES.

1 SOCES/CECC OFFICE FORM 002 (JAN 96)
STANDARD D LAYOUT (24" X 36")

REV #	DATE	DESCRIPTION	APP'D

APPROVED
CHIEF ENGINEER
APPROVED
CIVIL ENGINEER

HURLBURT FIELD
REPLACE WATER MAINS & VALVES
PHASE B–G

GENERAL NOTES

AIR FORCE SPECIAL OPERATIONS COMMAND
1 SPECIAL OPERATIONS CIVIL ENGINEER SQUADRON
HURLBURT FIELD, FLORIDA

DATE: FEBRUARY 2008
DESIGNED BY: MDL
DRAWN BY: RGG/PLG
BUILDING NO.: 39841.03
PROJECT NO.: FTEV 99–1015B–G
SHEET REF.: G001
SHEET NO.:

1 SOCES/CECC OFFICE FORM 002 (JAN 96)
STANDARD D LAYOUT (24" X 36")

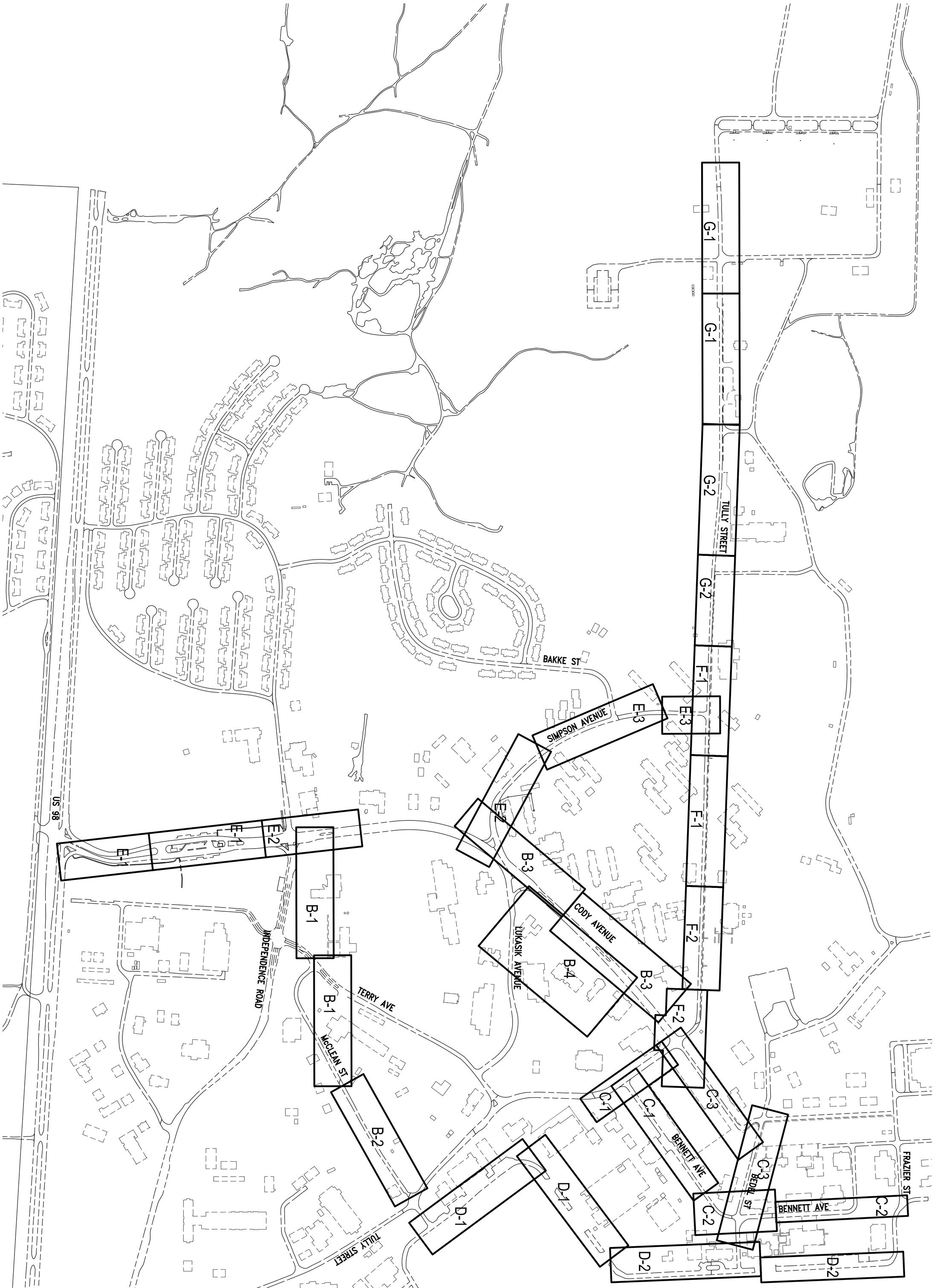

Sheet Key

SHEET NO.:	G002
SHEET REF.:	99-1015B-G
PROJECT NO:	FTEV
BUILDING NO.:	39841.03
DRAWN BY:	RGG/PLG
DESIGNED BY:	MDL
DATE:	FEBRUARY 2008

AIR FORCE SPECIAL OPERATIONS COMMAND
1 SPECIAL OPERATIONS CIVIL ENGINEER SQUADRON
HURLBURT FIELD, FLORIDA

HURLBURT FIELD
REPLACE WATER MAINS & VALVES
PHASE B-G
SHEET KEY

APPROVED
CHIEF ENGINEER
APPROVED
CIVIL ENGINEER

REV #	DATE	DESCRIPTION	APP'D

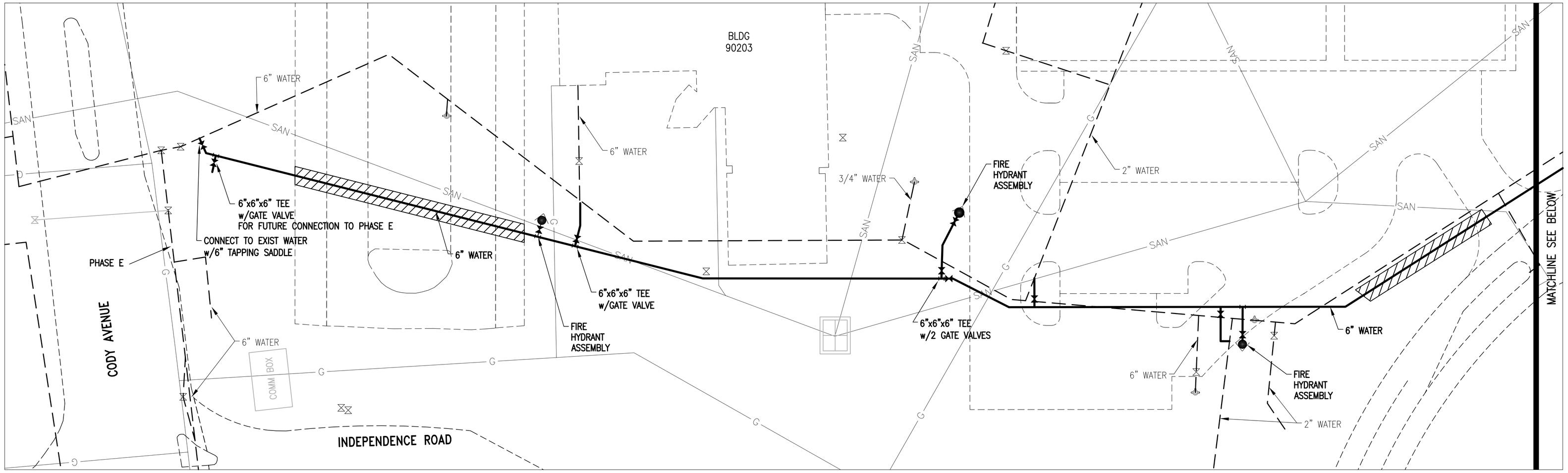

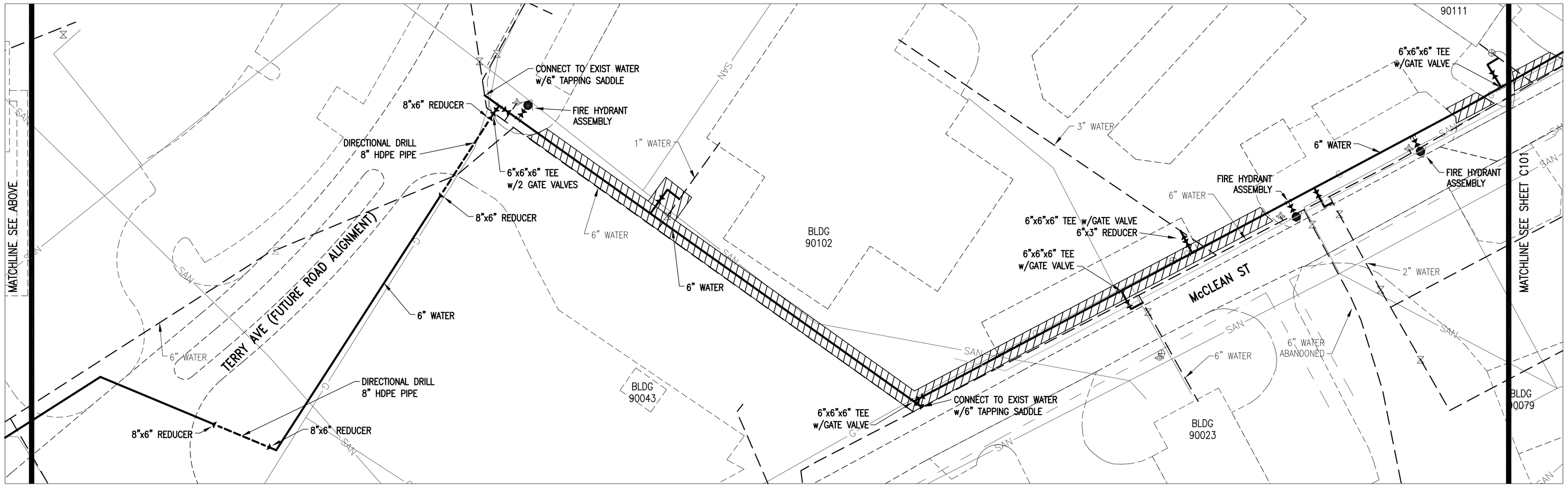

LEGEND

- EXISTING WATER VALVE
- EXISTING FIRE HYDRANT
- EXISTING WATER STANDPIPE
- EXISTING WATER METER
- EXISTING WATER LINE
- OPEN CUT CONCRETE
- OPEN CUT ASPHALT
- FIRE HYDRANT ASSEMBLY
- VALVE
- REDUCER
- TEE

B-1

1 SOCES/CECC OFFICE FORM 002 (JAN 96)
STANDARD D LAYOUT (24" X 36")

REV #	DATE	DESCRIPTION	APP'D

APPROVED
CHIEF ENGINEER
APPROVED
CIVIL ENGINEER

HURLBURT FIELD
REPLACE WATER MAINS & VALVES
PHASE B-G
PHASE B
WATER DISTRIBUTION

AIR FORCE SPECIAL
OPERATIONS COMMAND
1 SPECIAL OPERATIONS CIVIL ENGINEER SQUADRON
HURLBURT FIELD, FLORIDA

DATE: FEBRUARY 2008
DESIGNED BY: MDL
DRAWN BY: RGG/PLG
BUILDING NO.: 39841.03
PROJECT NO.: FTEV 99-1015B-G
SHEET REF.: C100
SHEET NO.:

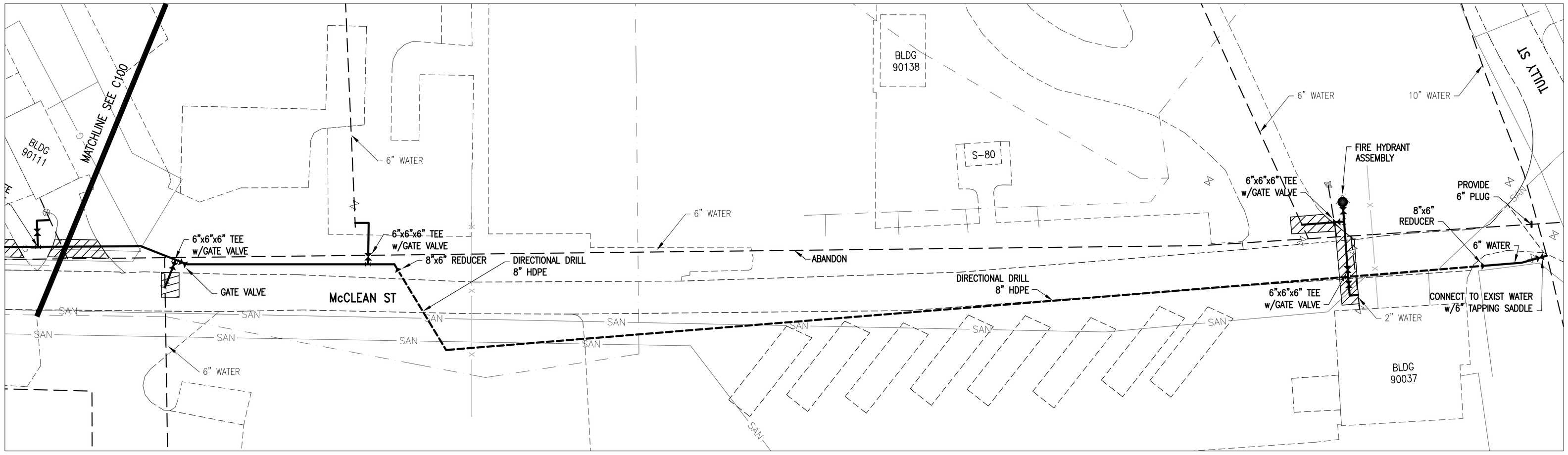

0 15' 30' 60'

B-2

1 SOCES/CECC OFFICE FORM 002 (JAN 96)
STANDARD D LAYOUT (24" X 36")

REV #	DATE	DESCRIPTION	APP'D

APPROVED
CHIEF ENGINEER
APPROVED
CIVIL ENGINEER

REPLACE WATER MAINS & VALVES
HURLBURT FIELD
PHASE B-G
PHASE B
WATER DISTRIBUTION

AIR FORCE SPECIAL OPERATIONS COMMAND
1 SPECIAL OPERATIONS CIVIL ENGINEER SQUADRON
HURLBURT FIELD, FLORIDA

DATE: FEBRUARY 2008
DESIGNED BY: MDL
DRAWN BY: RGG/PLG
BUILDING NO.: 39841.03
PROJECT NO.: FTEV 99-1015B-G
SHEET REF.: C101
SHEET NO.:

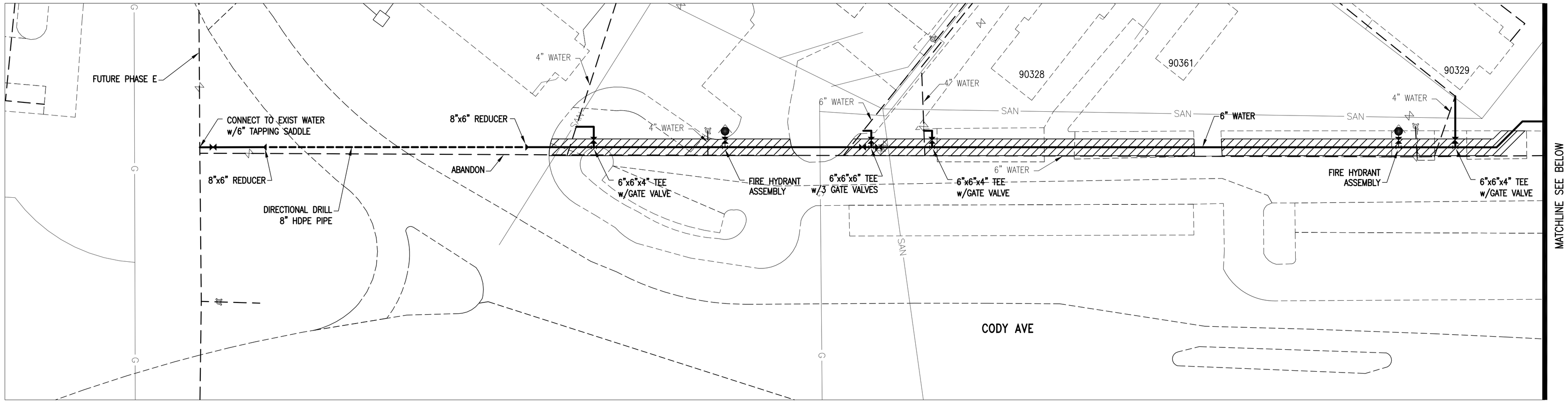

0 15' 30' 60'

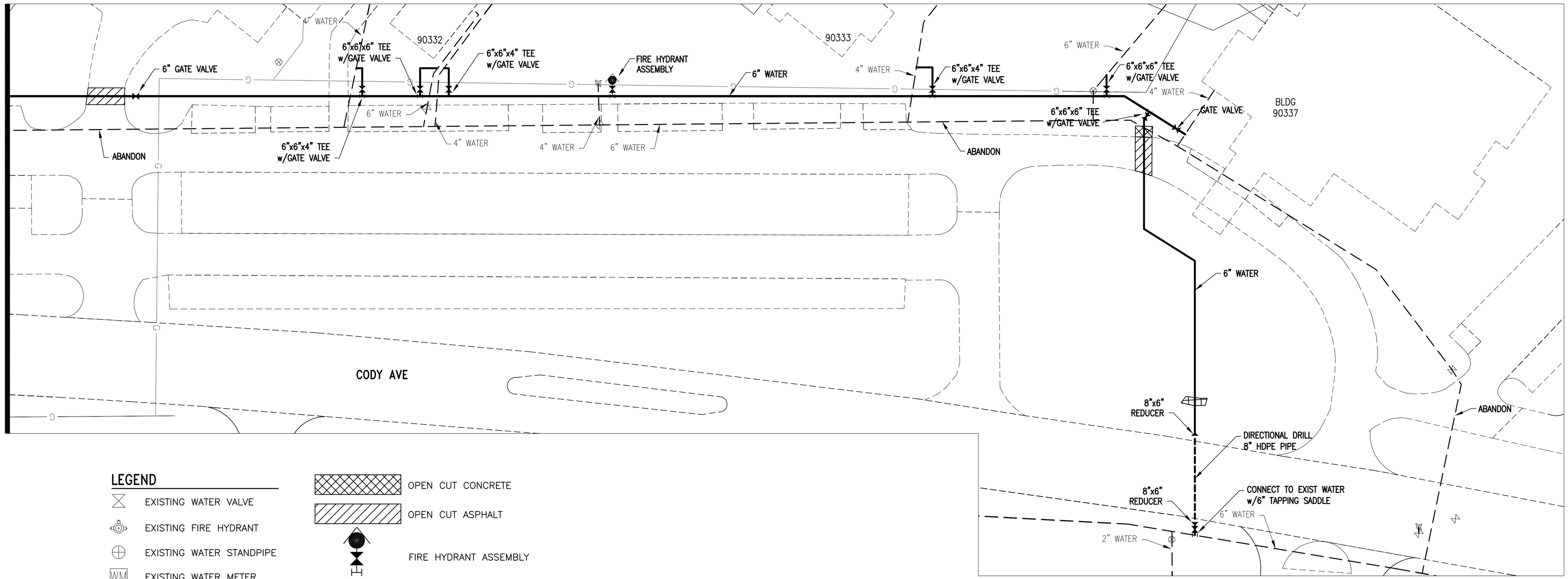

0 15' 30' 60'

LEGEND

- EXISTING WATER VALVE
- EXISTING FIRE HYDRANT
- EXISTING WATER STANDPIPE
- EXISTING WATER METER (WM)
- EXISTING WATER LINE
- OPEN CUT CONCRETE
- OPEN CUT ASPHALT
- FIRE HYDRANT ASSEMBLY
- VALVE
- REDUCER
- TEE

B-3

REV #	DATE	DESCRIPTION	APP'D

APPROVED
CHIEF ENGINEER
APPROVED
CIVIL ENGINEER

HURLBURT FIELD
REPLACE WATER MAINS & VALVES
PHASE B-G

PHASE B
WATER DISTRIBUTION

AIR FORCE SPECIAL OPERATIONS COMMAND
1 SPECIAL OPERATIONS CIVIL ENGINEER SQUADRON
HURLBURT FIELD, FLORIDA

DATE: FEBRUARY 2008
DESIGNED BY: MDL
DRAWN BY: RGG/PLG
BUILDING NO.: 39841.03
PROJECT NO.: FTEV 99-1015B-G
SHEET REF.: C102
SHEET NO.:

1 SOCES/CECC OFFICE FORM 002 (JAN 96)
STANDARD D LAYOUT (24" X 36")

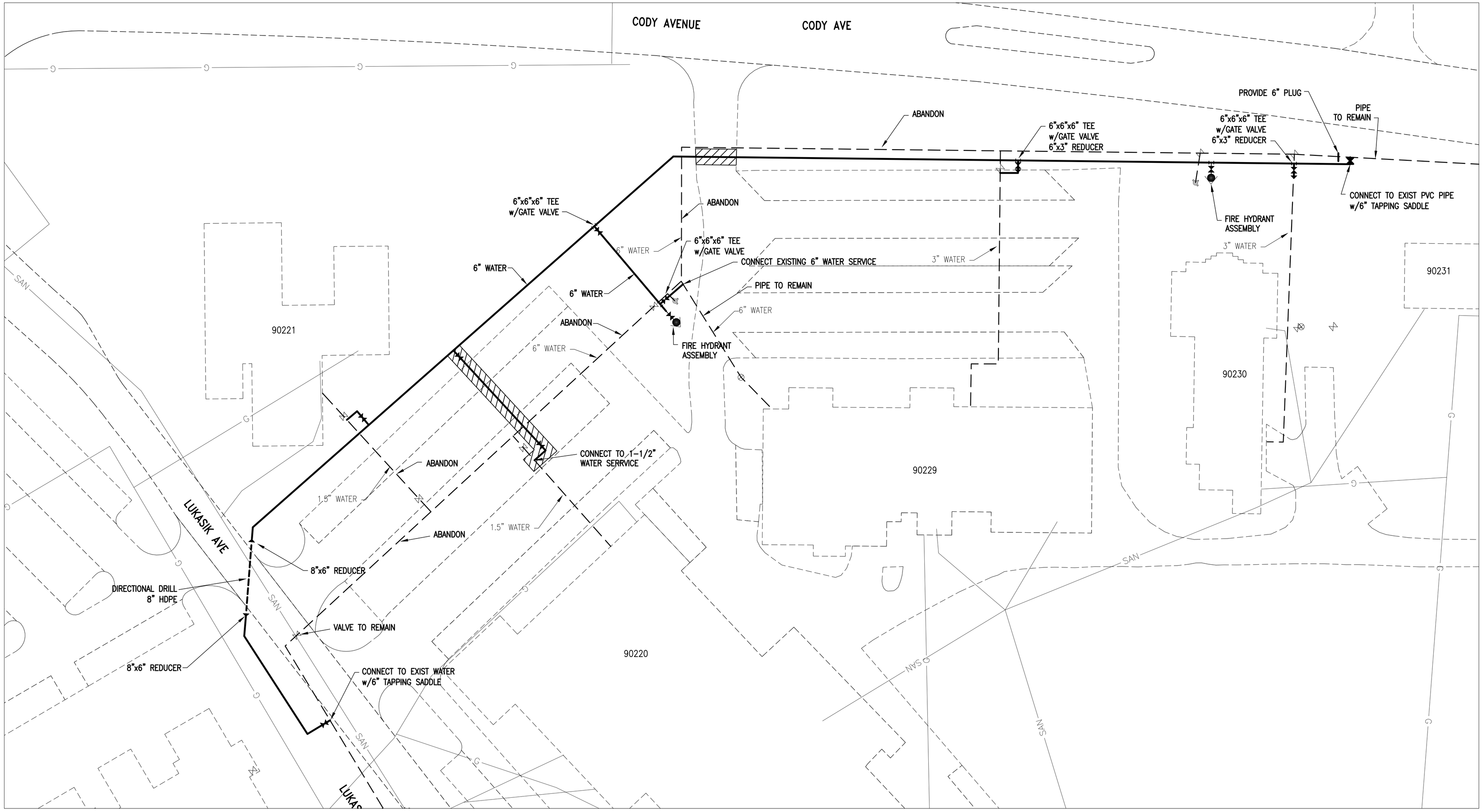

LEGEND

- EXISTING WATER VALVE
- EXISTING FIRE HYDRANT
- EXISTING WATER STANDPIPE
- WM EXISTING WATER METER
- EXISTING WATER LINE
- OPEN CUT CONCRETE
- OPEN CUT ASPHALT
- FIRE HYDRANT ASSEMBLY
- VALVE
- REDUCER
- TEE

0 15' 30' 60'

B-4

1 SOCES/CECC OFFICE FORM 002 (JAN 96)
STANDARD D LAYOUT (24" X 36")

REV #	DATE	DESCRIPTION	APP'D

APPROVED
CHIEF ENGINEER
APPROVED
CIVIL ENGINEER

HURLBURT FIELD
REPLACE WATER MAINS & VALVES
PHASE B-G

PHASE B
WATER DISTRIBUTION

AIR FORCE SPECIAL
OPERATIONS COMMAND
1 SPECIAL OPERATIONS CIVIL ENGINEER SQUADRON
HURLBURT FIELD, FLORIDA

DATE: FEBRUARY 2008
DESIGNED BY: MDL
DRAWN BY: RGG/PLG
BUILDING NO.: 39841.03
PROJECT NO.: FTEV 99-1015B-G
SHEET REF.: C103
SHEET NO.:

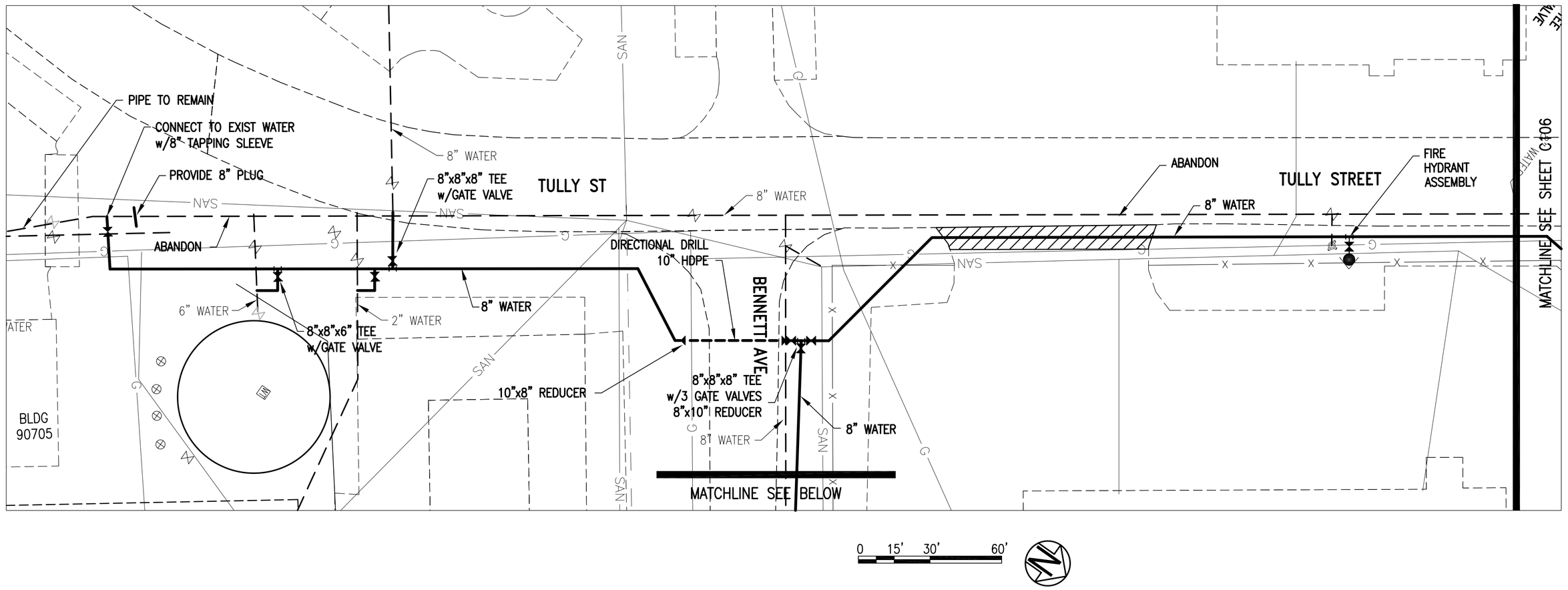

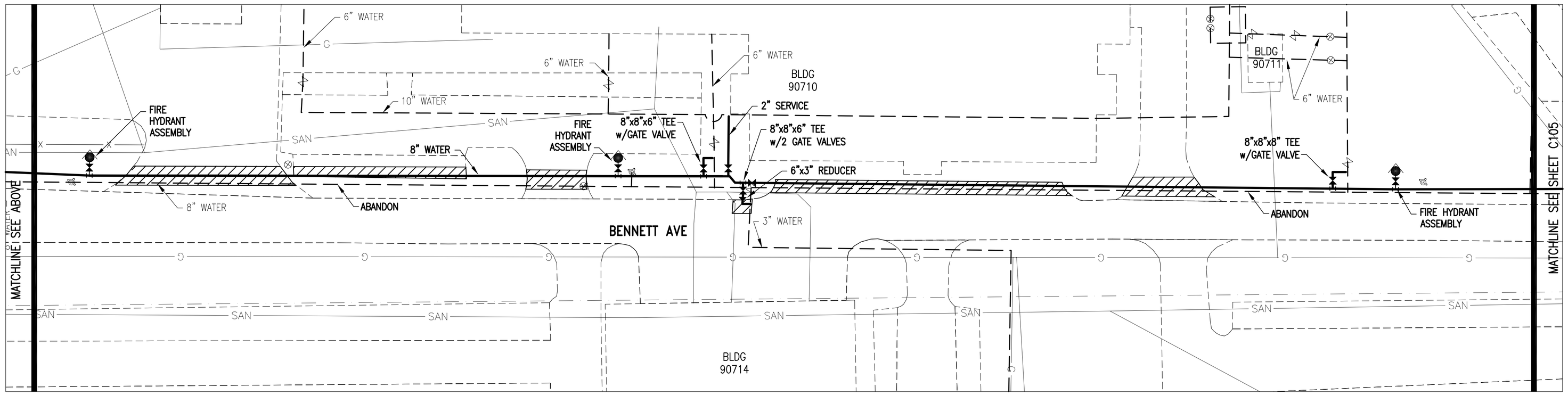

LEGEND

- EXISTING WATER VALVE
- EXISTING FIRE HYDRANT
- EXISTING WATER STANDPIPE
- EXISTING WATER METER (WM)
- EXISTING WATER LINE
- OPEN CUT CONCRETE
- OPEN CUT ASPHALT
- FIRE HYDRANT ASSEMBLY
- VALVE
- REDUCER
- TEE

C-1

1 SOCES/CECC OFFICE FORM 002 (JAN 96)
STANDARD D LAYOUT (24" X 36")

REV #	DATE	DESCRIPTION	APP'D

APPROVED
CHIEF ENGINEER
APPROVED
CIVIL ENGINEER

HURLBURT FIELD
REPLACE WATER MAINS & VALVES
PHASE B-G
PHASE C
WATER DISTRIBUTION

AIR FORCE SPECIAL OPERATIONS COMMAND
1 SPECIAL OPERATIONS CIVIL ENGINEER SQUADRON
HURLBURT FIELD, FLORIDA

DATE: FEBRUARY 2008
DESIGNED BY: MDL
DRAWN BY: RGG/PLG
BUILDING NO.: 39841.03
PROJECT NO.: FTEV 99-1015B-G
SHEET REF.: C104
SHEET NO.:

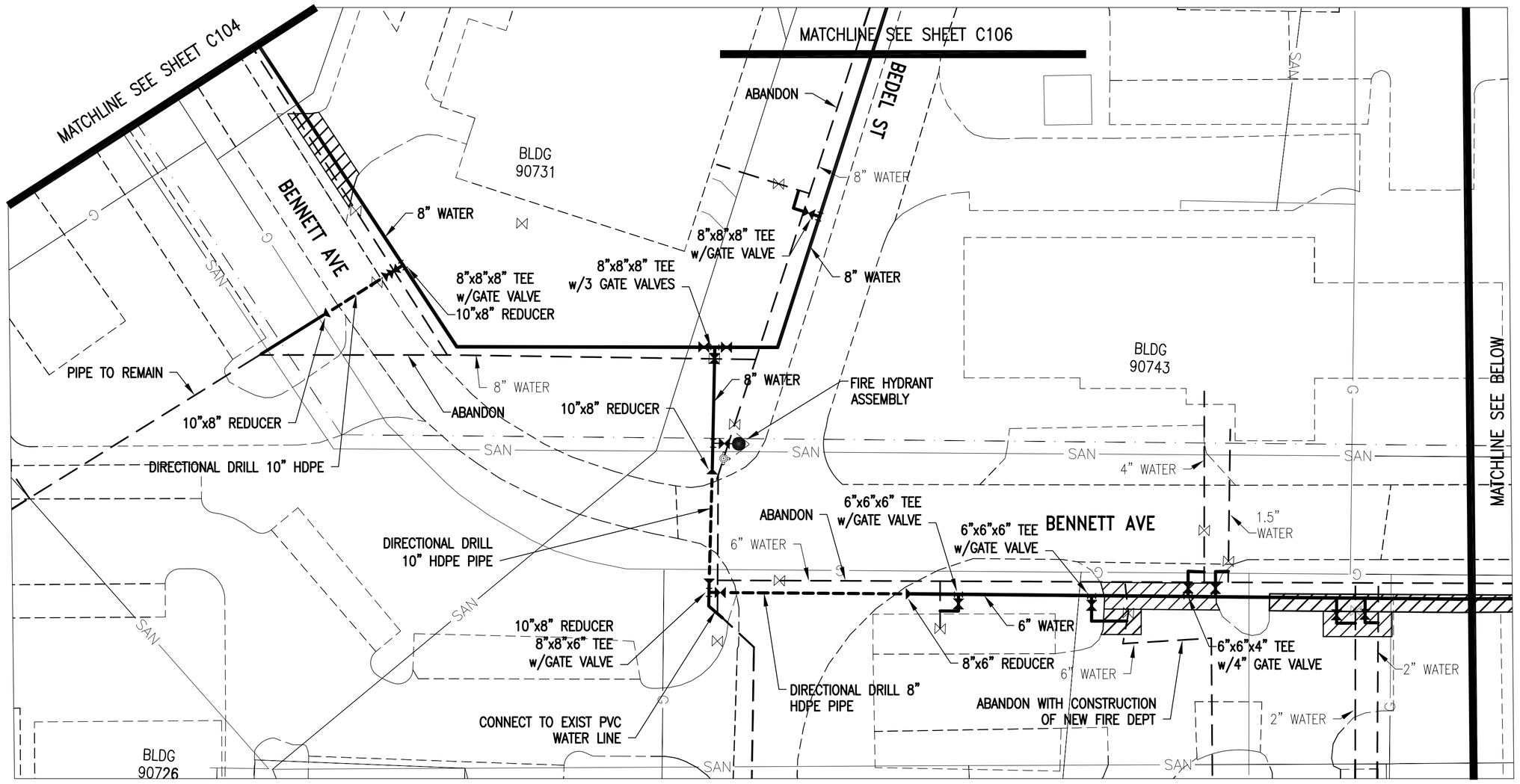

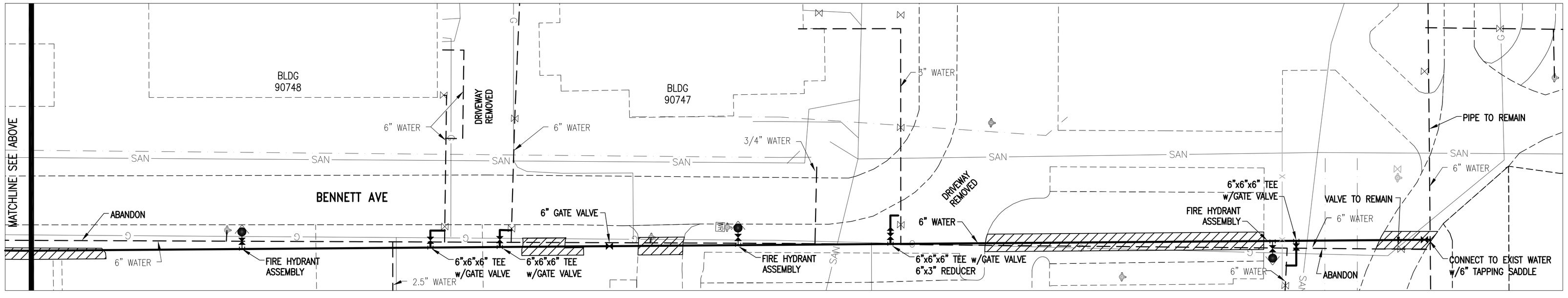

C-2

1 SOCES/CECC OFFICE FORM 002 (JAN 96)
STANDARD D LAYOUT (24" X 36")

REV #	DATE	DESCRIPTION	APP'D

APPROVED
CHIEF ENGINEER
APPROVED
CIVIL ENGINEER

HURLBURT FIELD
REPLACE WATER MAINS & VALVES
PHASE B-G
PHASE C
WATER DISTRIBUTION

AIR FORCE SPECIAL OPERATIONS COMMAND
1 SPECIAL OPERATIONS CIVIL ENGINEER SQUADRON
HURLBURT FIELD, FLORIDA

DATE: FEBRUARY 2008
DESIGNED BY: MDL MDL
DRAWN BY: RGG/PLG
BUILDING NO.: 39841.03
PROJECT NO.: FTEV 99-1015B-G
SHEET REF.: C105
SHEET NO.:

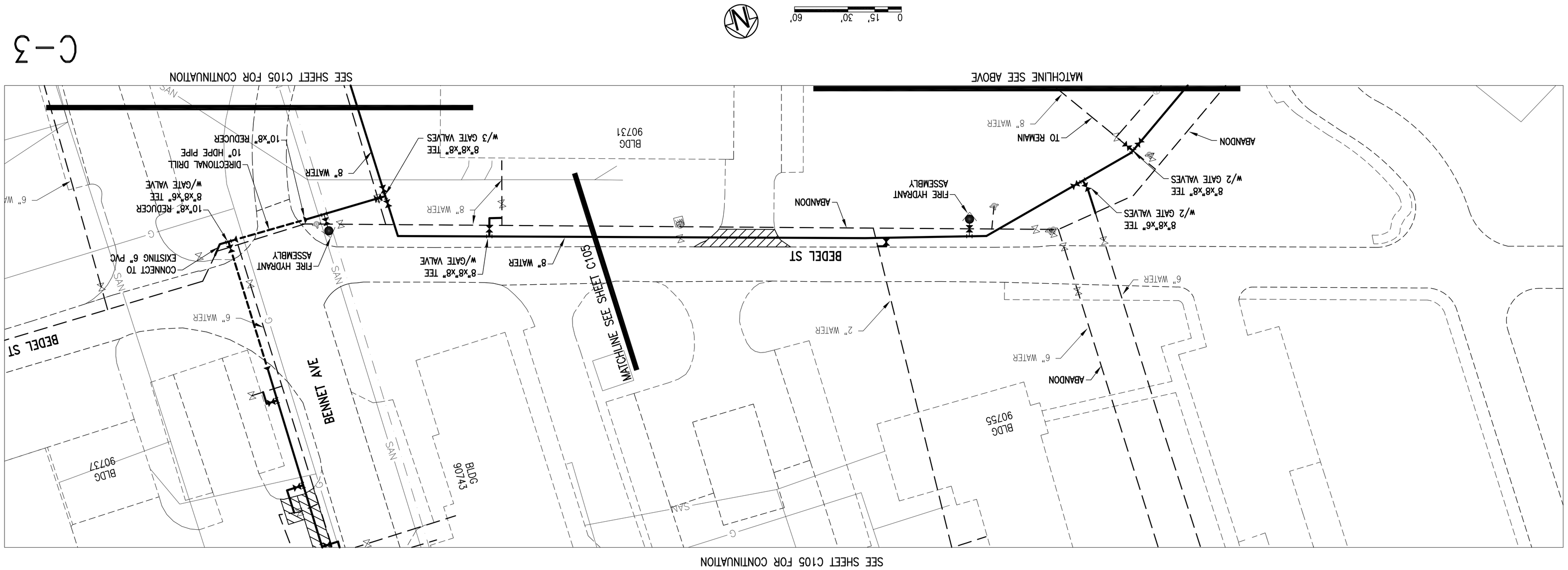

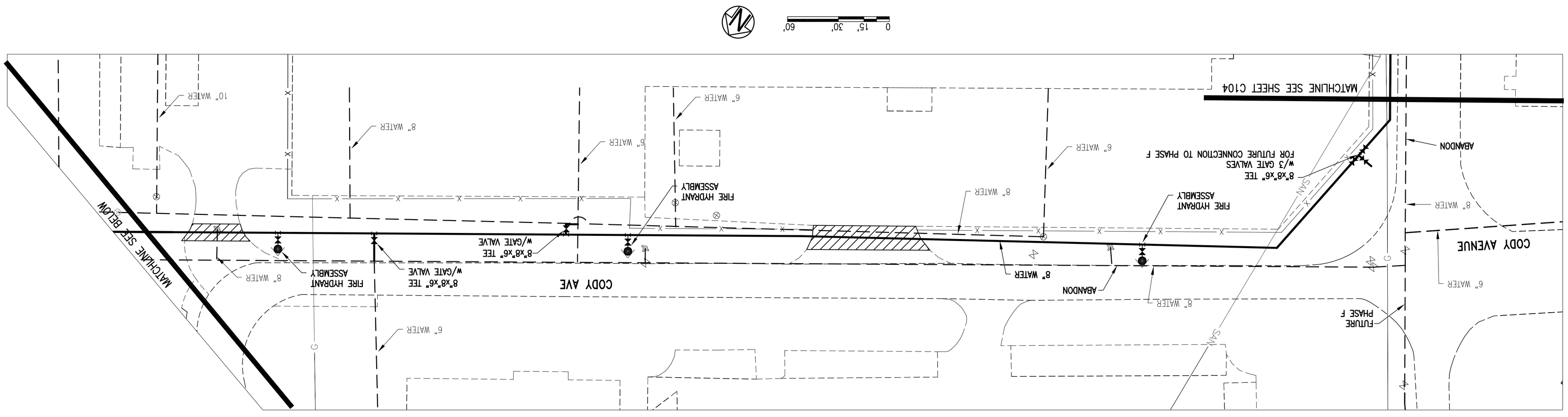

1. SOCES/CECC OFFICE FORM 002 (JAN 96)
STANDARD D LAYOUT (24" X 36")

AIR FORCE SPECIAL OPERATIONS COMMAND

1 SPECIAL OPERATIONS CIVIL ENGINEER SQUADRON
HURLBURT FIELD, FLORIDA

HURLBURT FIELD
REPLACE WATER MAINS & VALVES
PHASE B-G

PHASE C
WATER DISTRIBUTION

DATE:	FEBRUARY 2008
DESIGNED BY:	MDL
DRAWN BY:	RGG/PLG
BUILDING NO.:	39841.03
PROJECT NO.:	FTEV 99-1015B-G
SHEET REF.:	
SHEET NO.:	C106

APPROVED	
CHIEF ENGINEER	
APPROVED	
CIVIL ENGINEER	

REV #	DATE	DESCRIPTION	APP'D

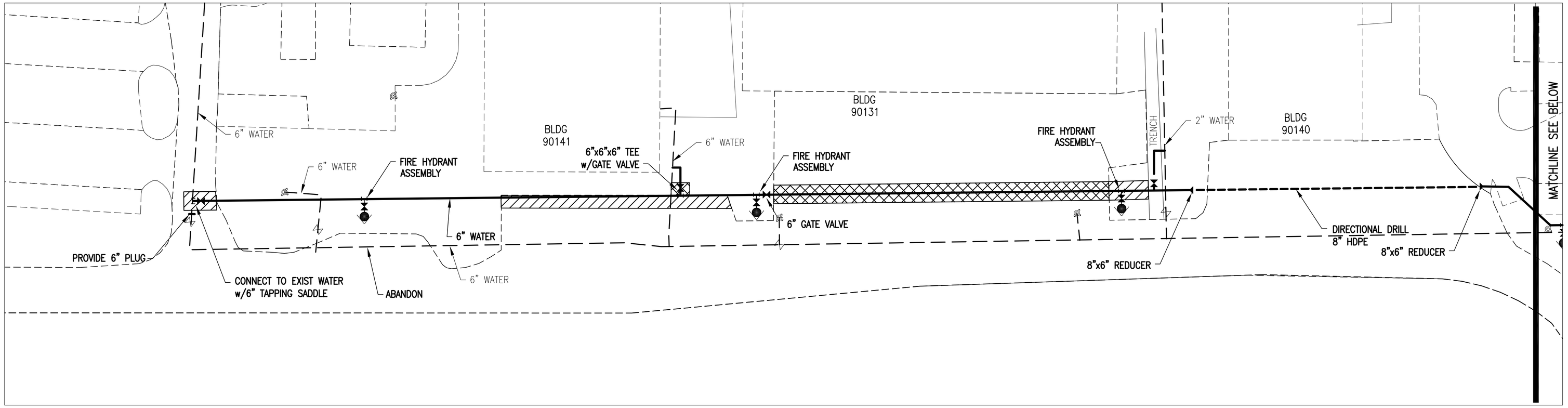

0 15' 30' 60'

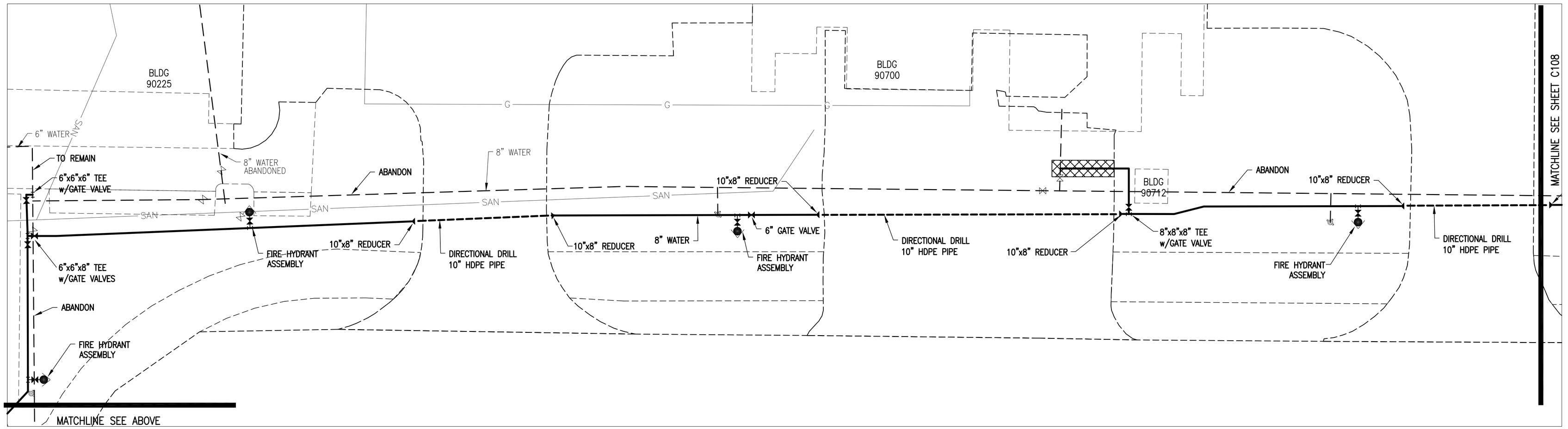

LEGEND

- EXISTING WATER VALVE
- EXISTING FIRE HYDRANT
- EXISTING WATER STANDPIPE
- EXISTING WATER METER (WM)
- EXISTING WATER LINE
- OPEN CUT CONCRETE
- OPEN CUT ASPHALT
- FIRE HYDRANT ASSEMBLY
- VALVE
- REDUCER
- TEE

0 15' 30' 60'

D-1

1 SOCES/CECG OFFICE FORM 1002 (JAN 96)
STANDARD D LAYOUT (24" X 36")

REV #	DATE	DESCRIPTION	APP'D

APPROVED
CHIEF ENGINEER
APPROVED
CIVIL ENGINEER

HURLBURT FIELD
REPLACE WATER MAINS & VALVES
PHASE B-G

PHASE D
WATER DISTRIBUTION

AIR FORCE SPECIAL OPERATIONS COMMAND
1 SPECIAL OPERATIONS CIVIL ENGINEER SQUADRON
HURLBURT FIELD, FLORIDA

DATE: FEBRUARY 2008
DESIGNED BY: MDL
DRAWN BY: RGG/PLG
BUILDING NO.: 39841.03
PROJECT NO.: FTEV 99-1015B-G
SHEET REF.: C107
SHEET NO.:

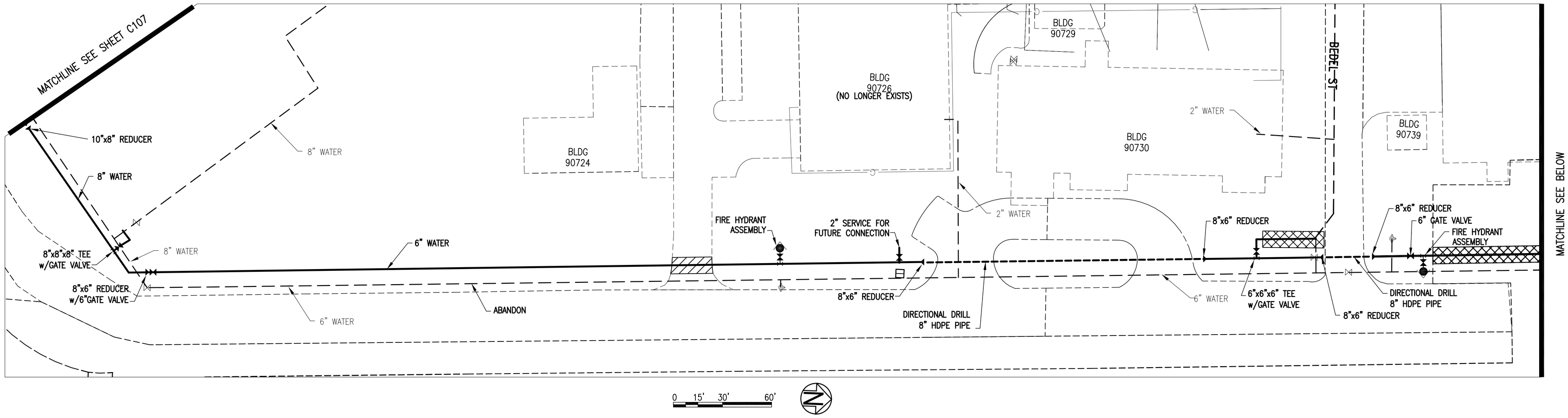

D-2

1 SOCES/CECG OFFICE FORM 102 (JAN 96)
STANDARD D LAYOUT (24" X 36")

REV #	DATE	DESCRIPTION	APP'D

APPROVED
CHIEF ENGINEER
APPROVED
CIVIL ENGINEER

HURLBURT FIELD
REPLACE WATER MAINS & VALVES
PHASE B-G
PHASE D
WATER DISTRIBUTION

AIR FORCE SPECIAL
OPERATIONS COMMAND
1 SPECIAL OPERATIONS CIVIL ENGINEER SQUADRON
HURLBURT FIELD, FLORIDA

DATE:
FEBRUARY 2008
DESIGNED BY:
MDL
DRAWN BY:
RGG/PLG
BUILDING NO.:
39841.03
PROJECT NO.:
FTEV
99-1015B-G
SHEET REF.:
C108
SHEET NO.:

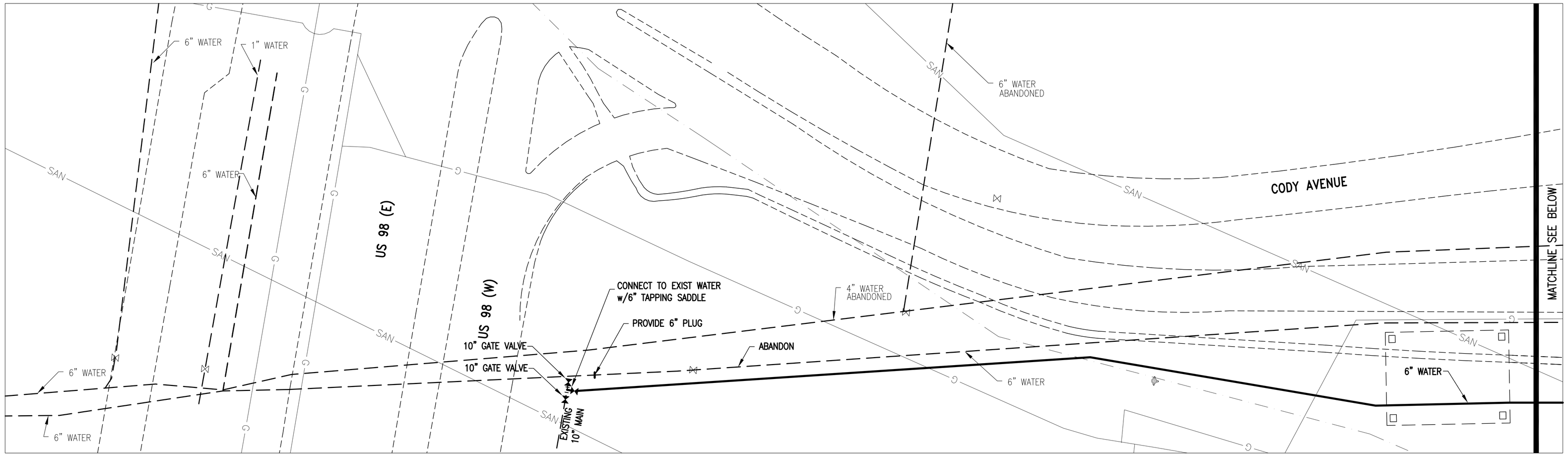

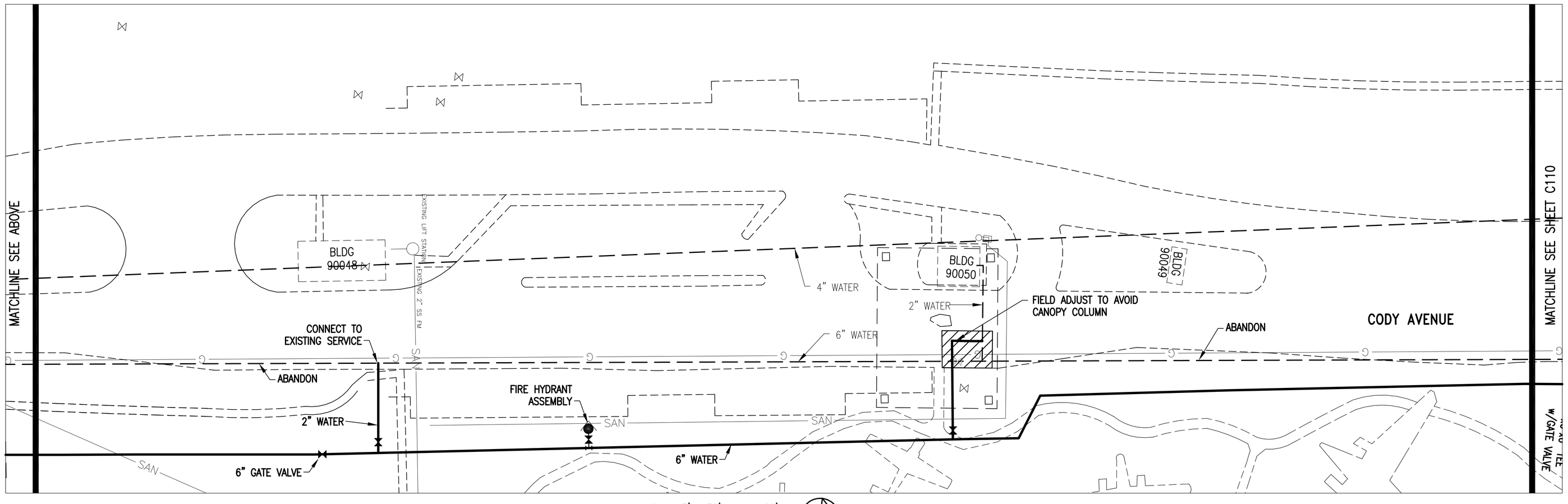

LEGEND

- EXISTING WATER VALVE
- EXISTING FIRE HYDRANT
- EXISTING WATER STANDPIPE
- WM EXISTING WATER METER
- EXISTING WATER LINE
- OPEN CUT CONCRETE
- OPEN CUT ASPHALT
- FIRE HYDRANT ASSEMBLY
- VALVE
- REDUCER
- TEE

E-1

1 SOCES/CECC OFFICE FORM 002 (JAN 96)
STANDARD D LAYOUT (24" X 36")

REV #	DATE	DESCRIPTION	APP'D

APPROVED
CHIEF ENGINEER
APPROVED
CIVIL ENGINEER

HURLBURT FIELD
REPLACE WATER MAINS & VALVES
PHASE B-G

PHASE E
WATER DISTRIBUTION

AIR FORCE SPECIAL OPERATIONS COMMAND
1 SPECIAL OPERATIONS CIVIL ENGINEER SQUADRON
HURLBURT FIELD, FLORIDA

DATE: FEBRUARY 2008
DESIGNED BY: MDL
DRAWN BY: RGG/PLG
BUILDING NO.: 39841.03
PROJECT NO.: FTEV 99-1015B-G
SHEET REF.: C109
SHEET NO.:

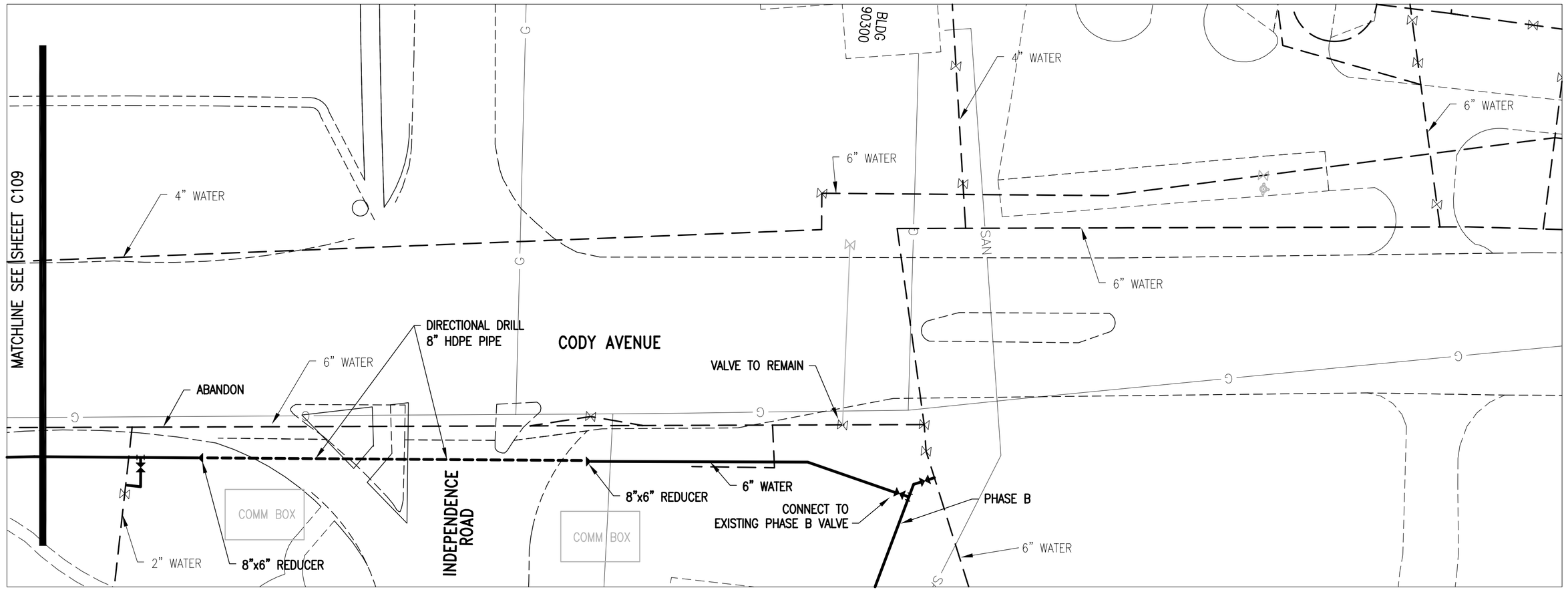

0 15' 30' 60'

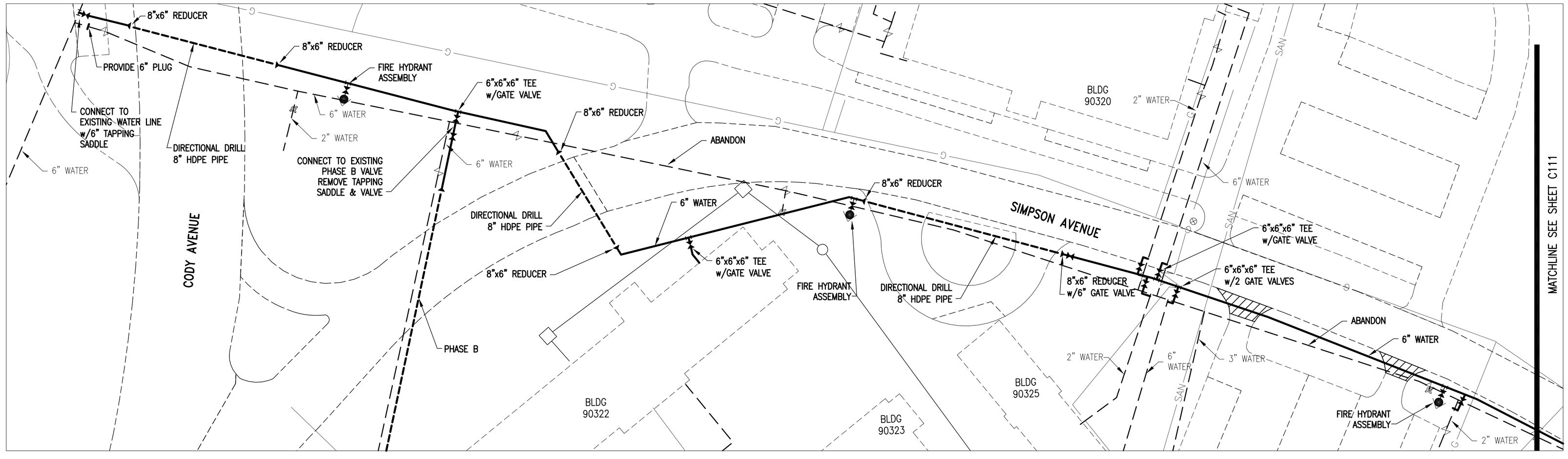

0 15' 30' 60'

E-2

1 SOCES/CECC OFFICE FORM 002 (JAN 96)
STANDARD D LAYOUT (24" X 36")

REV #	DATE	DESCRIPTION	APP'D

APPROVED
CHIEF ENGINEER
APPROVED
CIVIL ENGINEER

HURLBURT FIELD
REPLACE WATER MAINS & VALVES
PHASE B-G
PHASE E
WATER DISTRIBUTION

AIR FORCE SPECIAL
OPERATIONS COMMAND
1 SPECIAL OPERATIONS CIVIL ENGINEER SQUADRON
HURLBURT FIELD, FLORIDA

DATE:
FEBRUARY 2008
DESIGNED BY:
MDL
DRAWN BY:
RGG/PLG
BUILDING NO.:
39841.03
PROJECT NO.:
FTEV
99-1015B-G
SHEET REF.:
C110
SHEET NO.:

1 SOCES/CECC OFFICE FORM 002 (JAN 96)
STANDARD D LAYOUT (24" X 36")

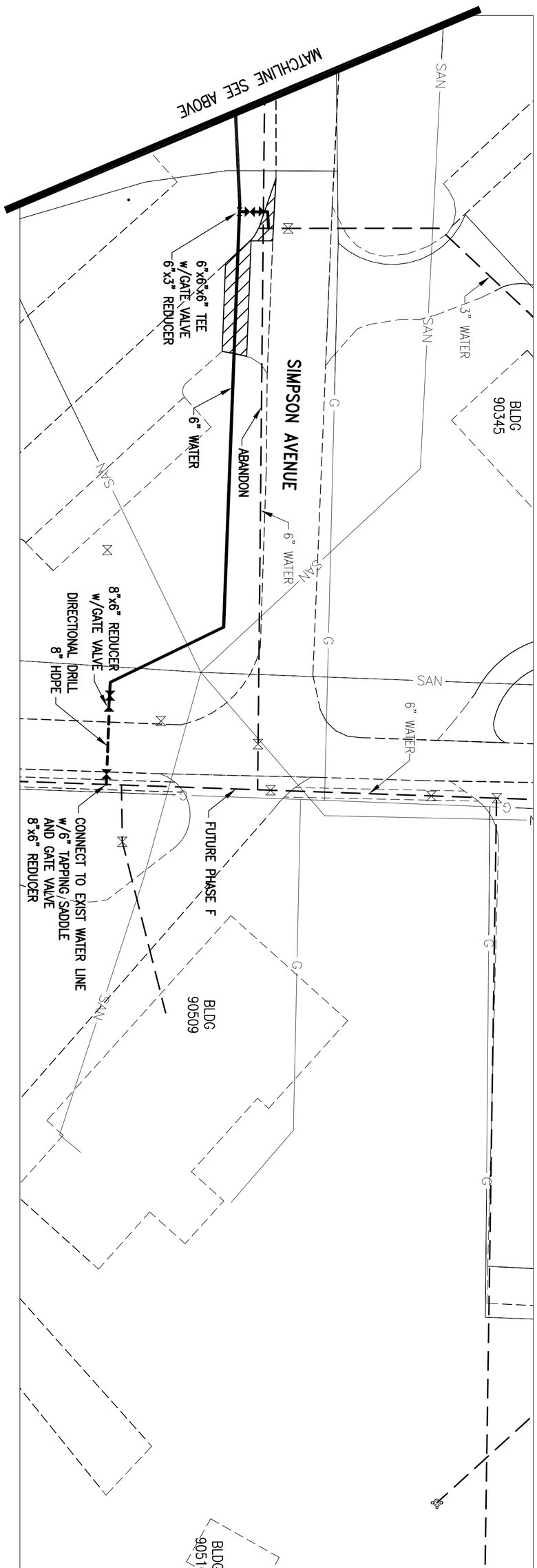

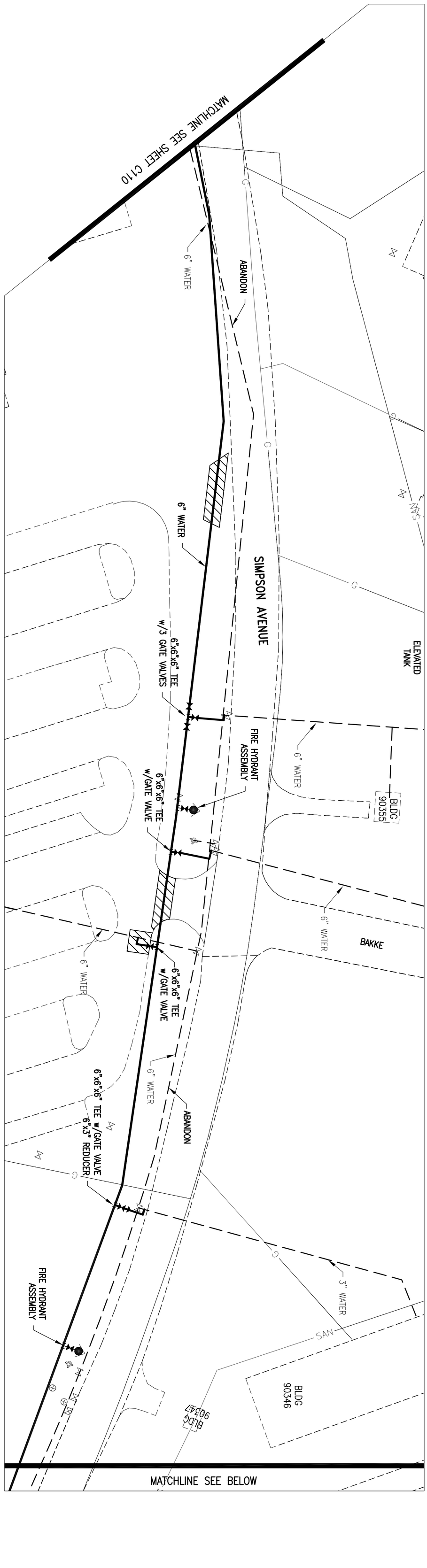

E-3

SHEET NO.: C111	PROJECT NO.: FTEV 99-1015B-G	DRAWN BY: RGG/PLG	DESIGNED BY: MDL	DATE: FEBRUARY 2008	**AIR FORCE SPECIAL OPERATIONS COMMAND** 1 SPECIAL OPERATIONS CIVIL ENGINEER SQUADRON HURLBURT FIELD, FLORIDA	HURLBURT FIELD REPLACE WATER MAINS & VALVES PHASE B-G PHASE E WATER DISTRIBUTION	APPROVED CHIEF ENGINEER APPROVED CIVIL ENGINEER	REV # / DATE / DESCRIPTION / APP'D	

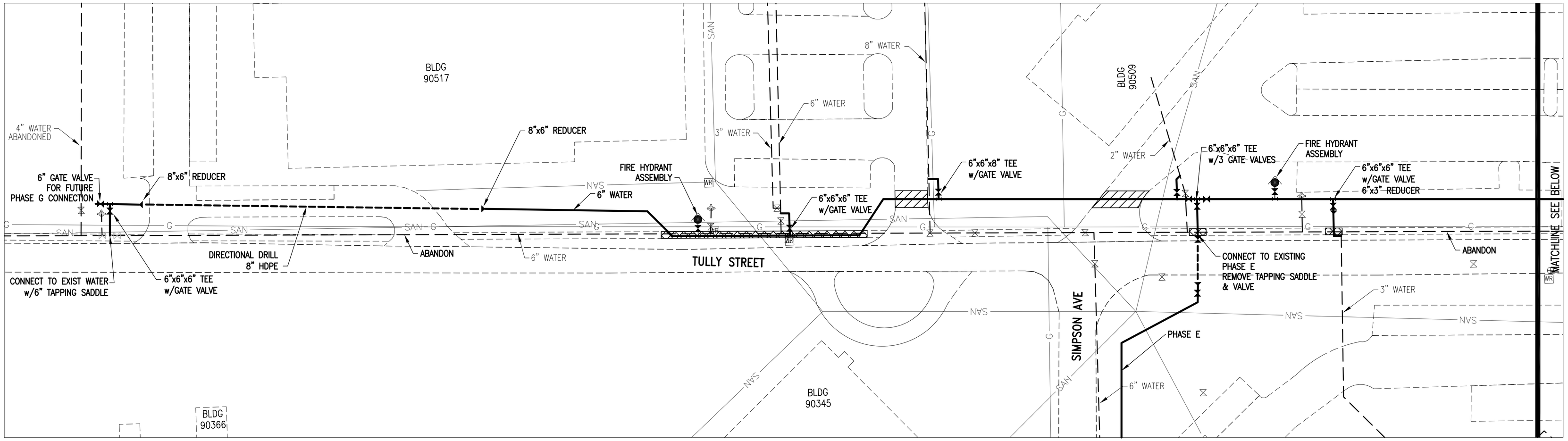

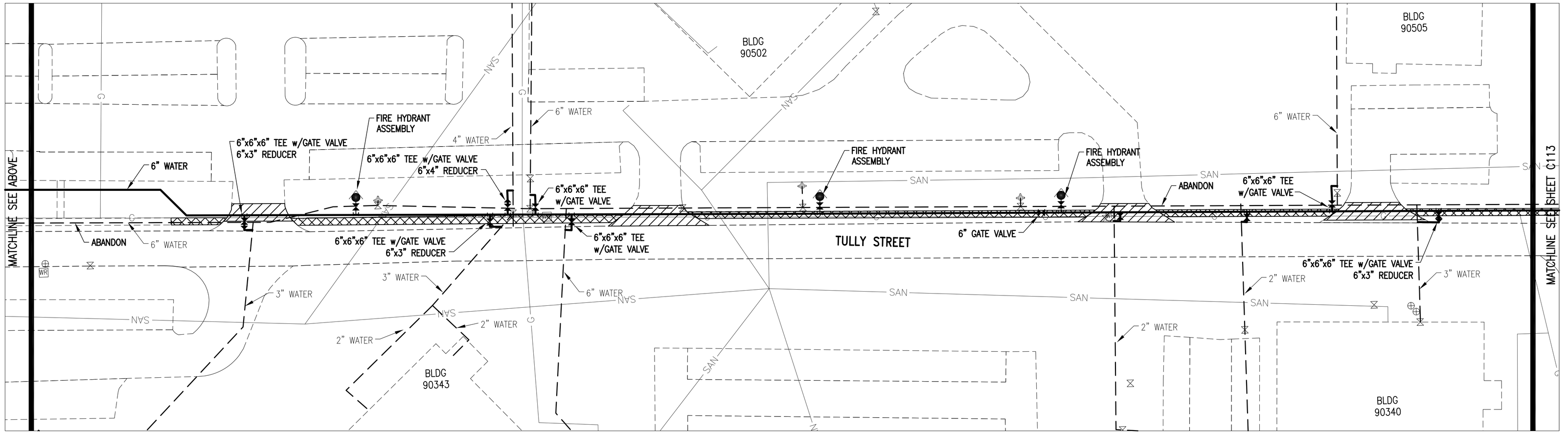

LEGEND

- EXISTING WATER VALVE
- EXISTING FIRE HYDRANT
- EXISTING WATER STANDPIPE
- EXISTING WATER METER
- EXISTING WATER LINE
- OPEN CUT CONCRETE
- OPEN CUT ASPHALT
- FIRE HYDRANT ASSEMBLY
- VALVE
- REDUCER
- TEE

F-1

1 SOCES/CECG OFFICE FORM 002 (JAN 96)
STANDARD D LAYOUT (24" X 36")

REV #	DATE	DESCRIPTION	APP'D

APPROVED
CHIEF ENGINEER
APPROVED
CIVIL ENGINEER

HURLBURT FIELD
REPLACE WATER MAINS & VALVES
PHASE B-G
PHASE F
WATER DISTRIBUTION

AIR FORCE SPECIAL OPERATIONS COMMAND
1 SPECIAL OPERATIONS CIVIL ENGINEER SQUADRON
HURLBURT FIELD, FLORIDA

DATE: FEBRUARY 2008
DESIGNED BY: MDL
DRAWN BY: RGG/PLG
BUILDING NO.: 39841.03
PROJECT NO.: FTEV 99-1015B-G
SHEET REF.: C112
SHEET NO.:

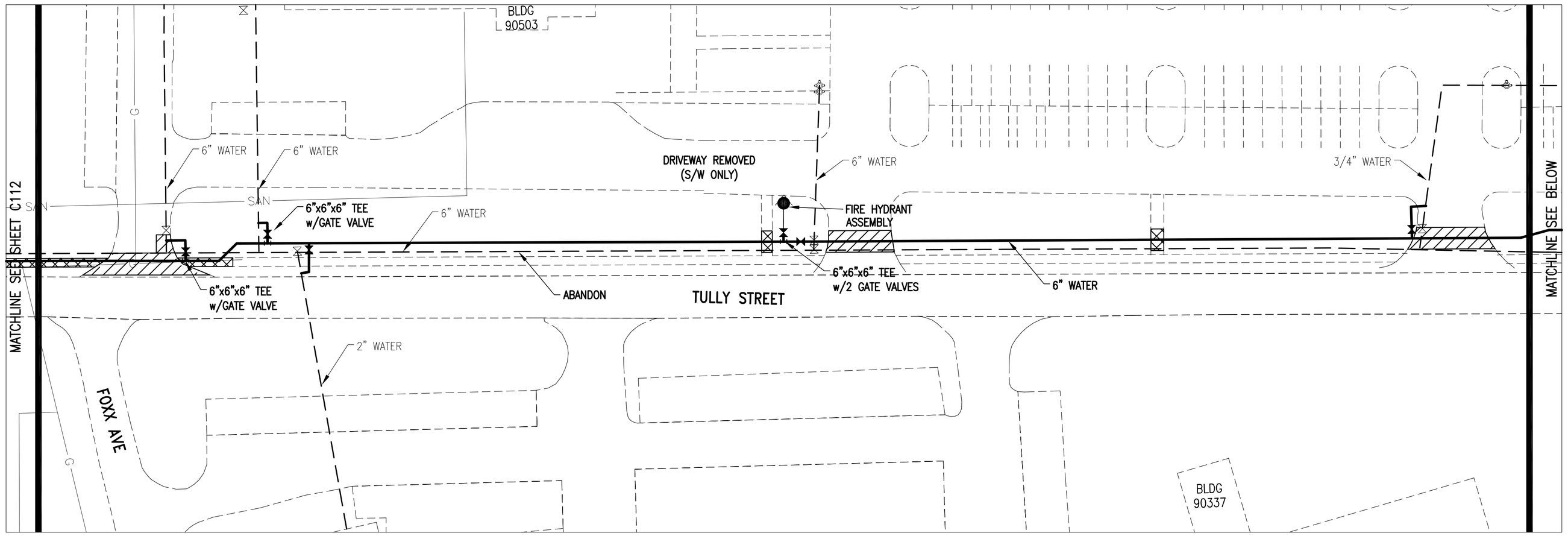

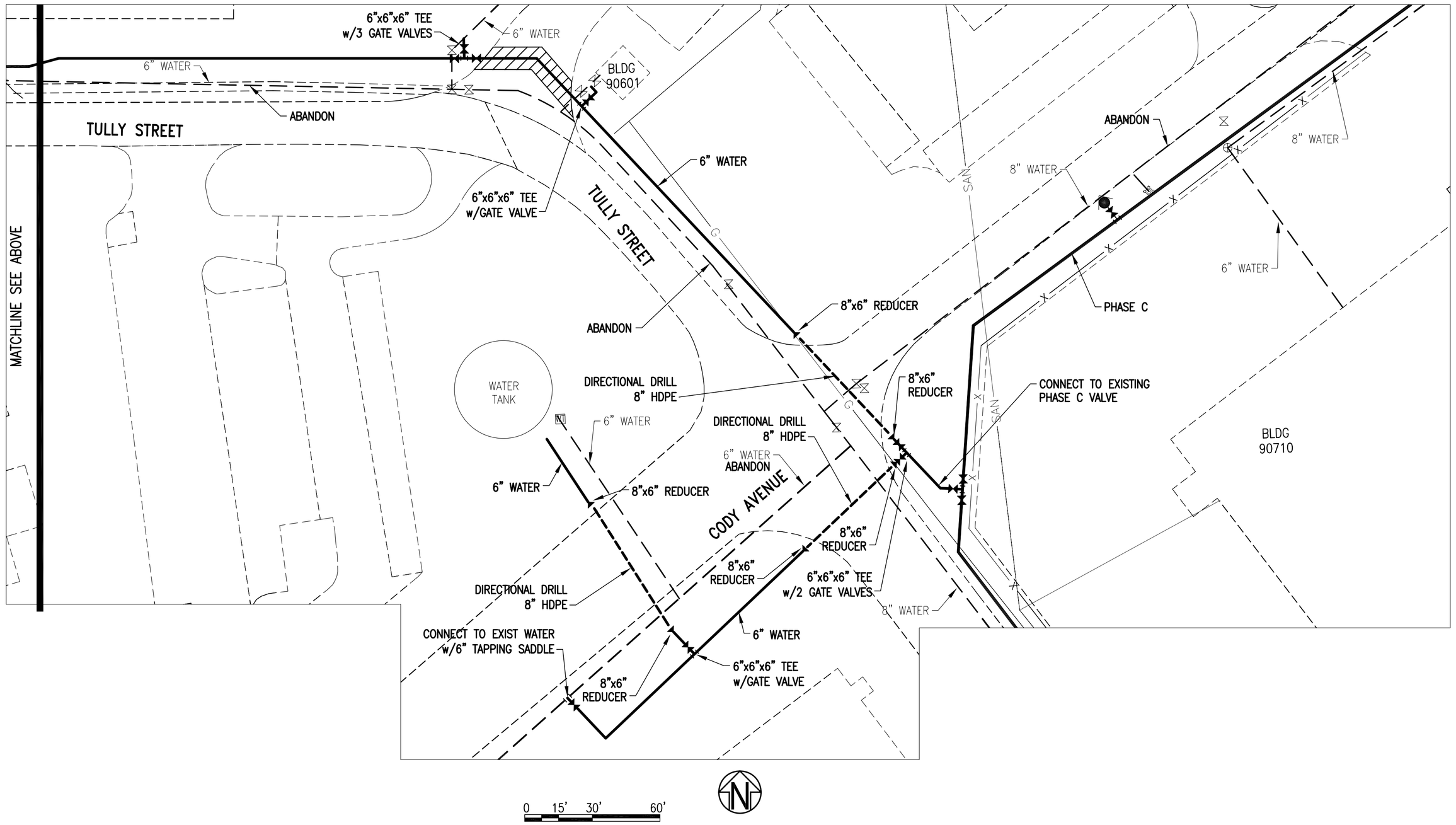

F-2

1 SOCES/CECC OFFICE FORM 002 (JAN 96)
STANDARD D LAYOUT (24" X 36")

REV #	DATE	DESCRIPTION	APP'D

APPROVED
CHIEF ENGINEER
APPROVED
CIVIL ENGINEER

HURLBURT FIELD
REPLACE WATER MAINS & VALVES
PHASE B-G
PHASE F
WATER DISTRIBUTION

AIR FORCE SPECIAL
OPERATIONS COMMAND
1 SPECIAL OPERATIONS CIVIL ENGINEER SQUADRON
HURLBURT FIELD, FLORIDA

DATE:
FEBRUARY 2008
DESIGNED BY:
MDL
DRAWN BY:
RGG/PLG
BUILDING NO.:
39841.03
PROJECT NO.:
FTEV
99-1015B-G
SHEET REF.:
C113
SHEET NO.:

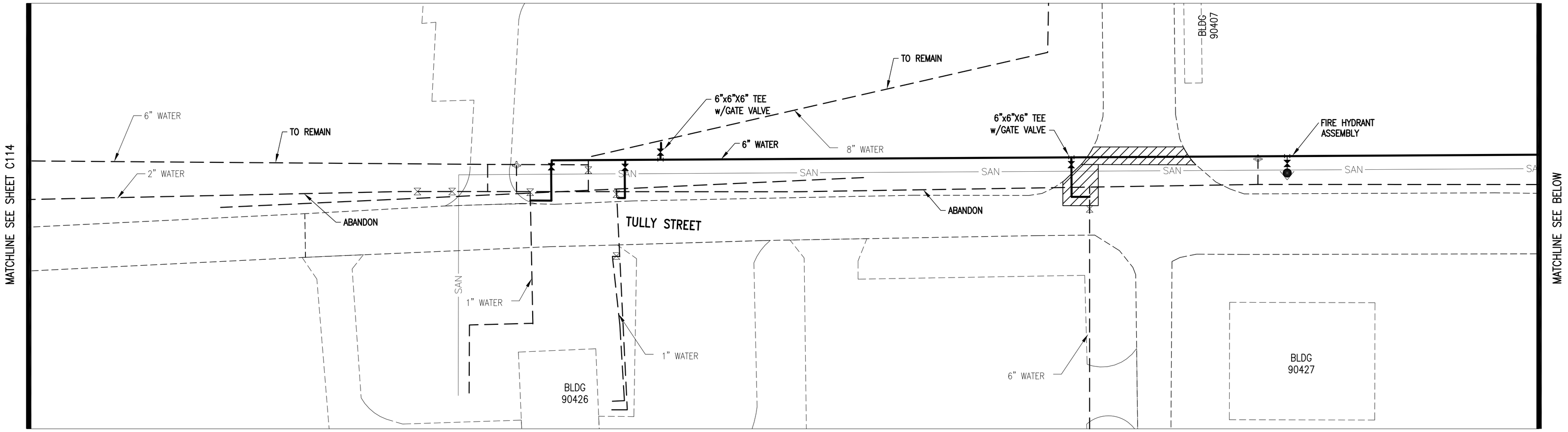

LEGEND

- EXISTING WATER VALVE
- EXISTING FIRE HYDRANT
- EXISTING WATER STANDPIPE
- EXISTING WATER METER
- EXISTING WATER LINE
- OPEN CUT CONCRETE
- OPEN CUT ASPHALT
- FIRE HYDRANT ASSEMBLY
- VALVE
- REDUCER
- TEE

G-1

1 SOCES/CECC OFFICE FORM 002 (JAN 96)
STANDARD D LAYOUT (24" X 36")

REV #	DATE	DESCRIPTION	APP'D

APPROVED
CHIEF ENGINEER
APPROVED
CIVIL ENGINEER

HURLBURT FIELD
REPLACE WATER MAINS & VALVES
PHASE B-G
PHASE G
WATER DISTRIBUTION

AIR FORCE SPECIAL OPERATIONS COMMAND
1 SPECIAL OPERATIONS CIVIL ENGINEER SQUADRON
HURLBURT FIELD, FLORIDA

DATE: FEBRUARY 2008
DESIGNED BY: MDL
DRAWN BY: RGG/PLG
BUILDING NO.: 39841.03
PROJECT NO.: FTEV 99-1015B-G
SHEET REF.: C114
SHEET NO.:

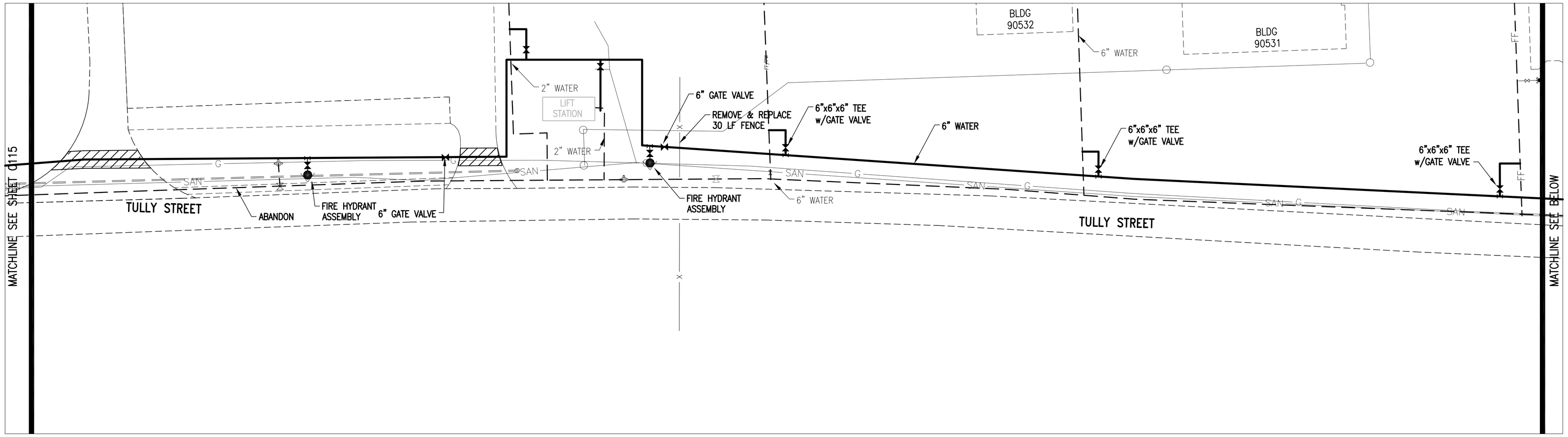

0 15' 30' 60'

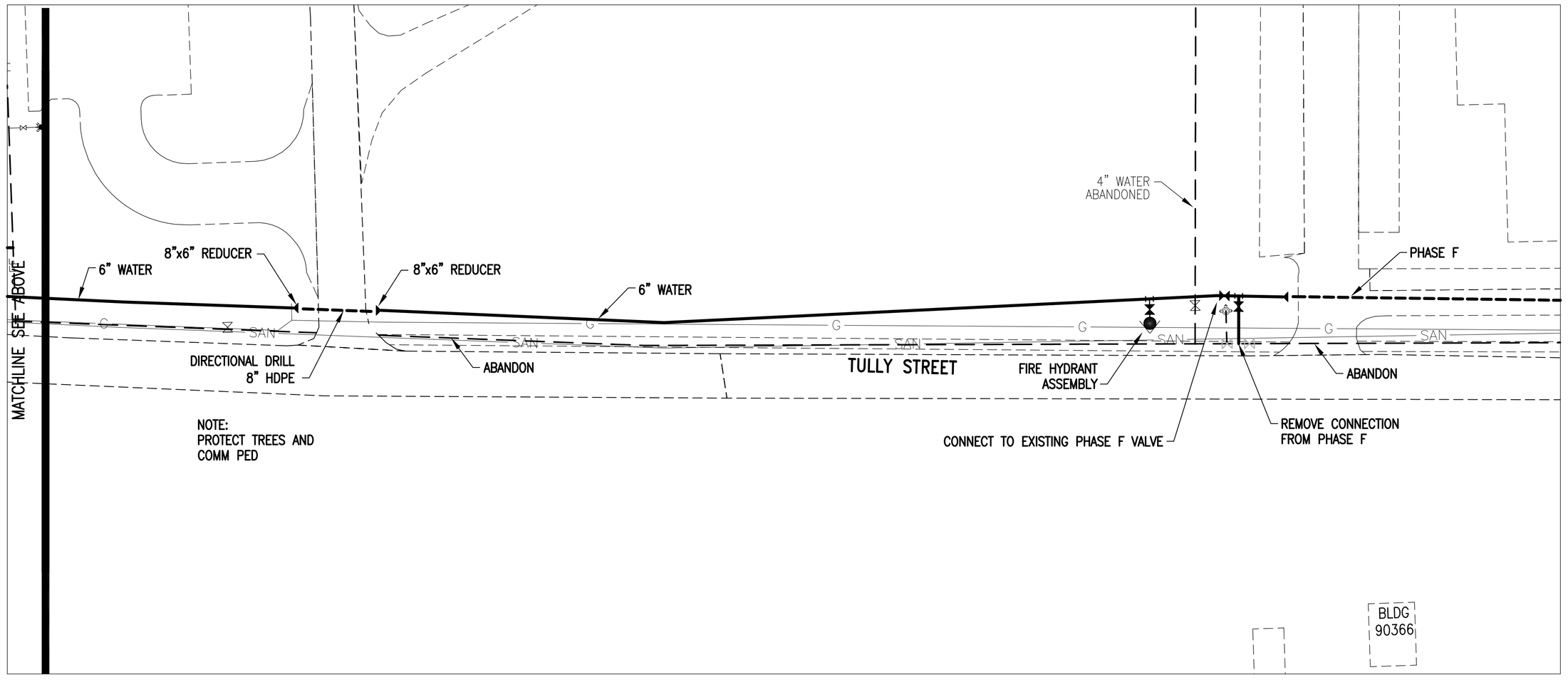

0 15' 30' 60'

G-2

* SOCES/CECC OFFICE FORM 002 (JAN 96)
STANDARD D LAYOUT (24" X 36")

REV #	DATE	DESCRIPTION	APP'D

APPROVED
CHIEF ENGINEER
APPROVED
CIVIL ENGINEER

HURLBURT FIELD
REPLACE WATER MAINS & VALVES
PHASE B-G
PHASE G
WATER DISTRIBUTION

AIR FORCE SPECIAL OPERATIONS COMMAND
1 SPECIAL OPERATIONS CIVIL ENGINEER SQUADRON
HURLBURT FIELD, FLORIDA

DATE: FEBRUARY 2008
DESIGNED BY: MDL
DRAWN BY: RGG/PLG
BUILDING NO.: 39841.03
PROJECT NO.: FTEV 99-1015B-G
SHEET REF.: C115
SHEET NO.:

1 SIZE/DESC OFFICE (24" X 36")
STANDARD LAYOUT FORM 2002 (JAN 96)

AIR FORCE SPECIAL OPERATIONS COMMAND

1 SPECIAL OPERATIONS CIVIL ENGINEER SQUADRON
HURLBURT FIELD, FLORIDA

DATE:	FEBRUARY 2008
DESIGNED BY:	MDL
DRAWN BY:	RGG/PLG
BUILDING NO.:	3984103
PROJECT NO.:	FTEV 99-1015B-G
SHEET REF.:	
SHEET NO.:	C116

HURLBURT FIELD
REPLACE WATER MAINS & VALVES
PHASE B-G

PHASE G
TRUCK TURN OFF

	APPROVED	REV #	DATE	DESCRIPTION	APP'D
CIVIL ENGINEER	CHIEF, ENGINEER APPROVED				

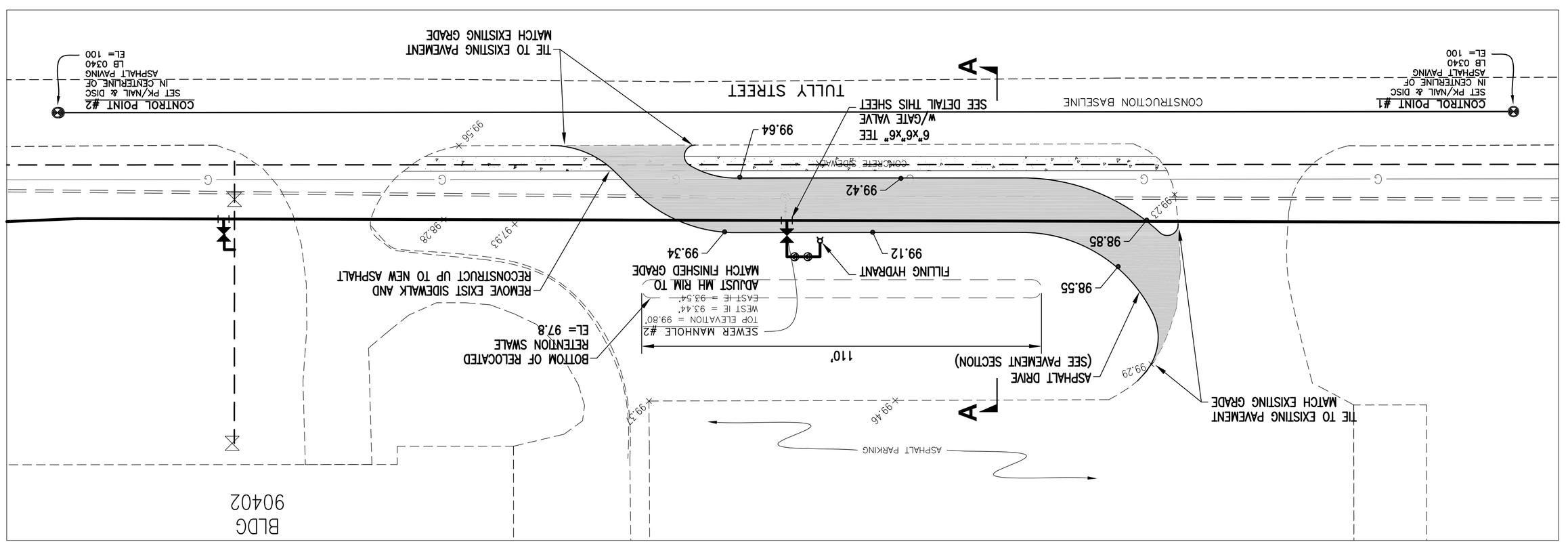

PAVING AND GRADING PLAN

0 10' 20' 40'

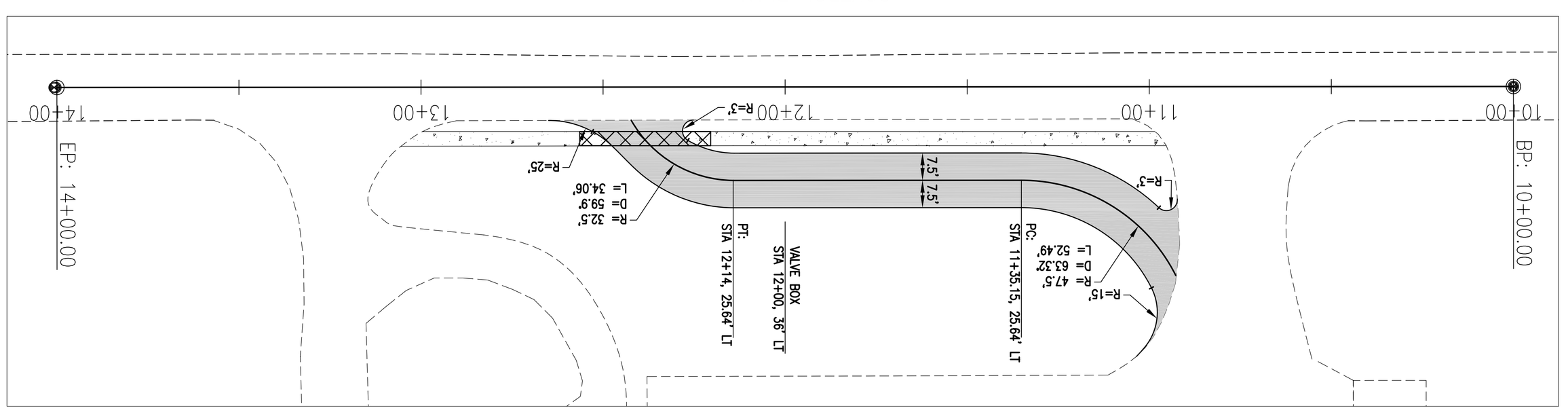

CONTROL PLAN

0 10' 20' 40'

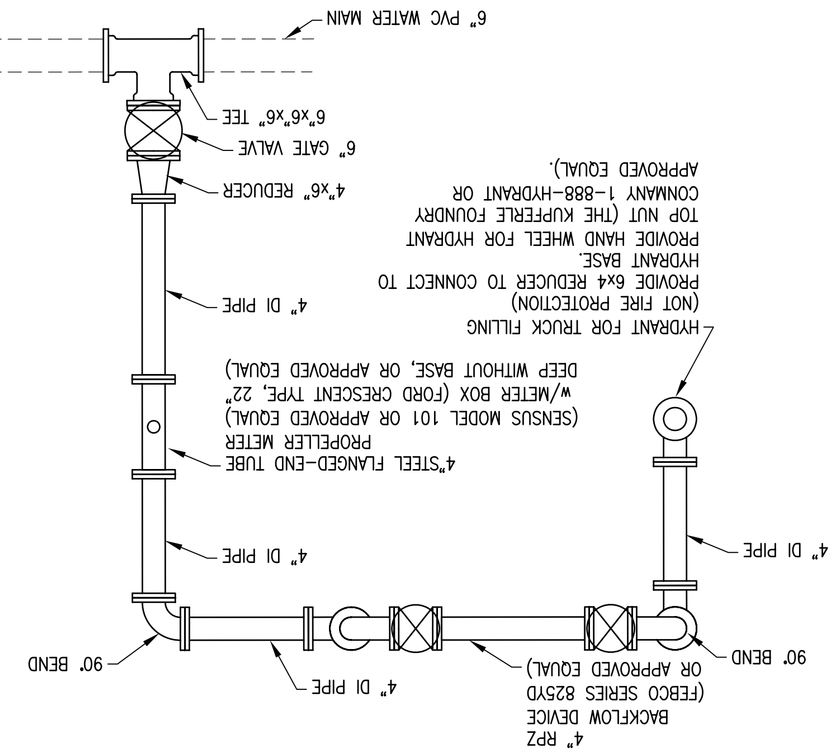

WATER SERVICE DETAIL

NOT TO SCALE

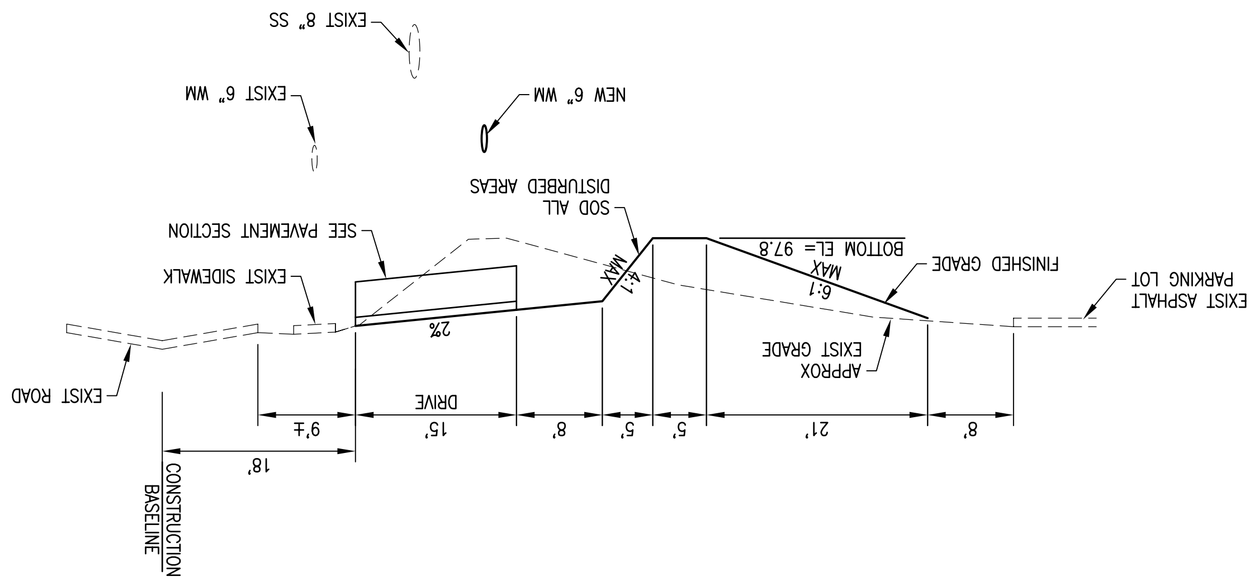

SECTION A-A

NOT TO SCALE

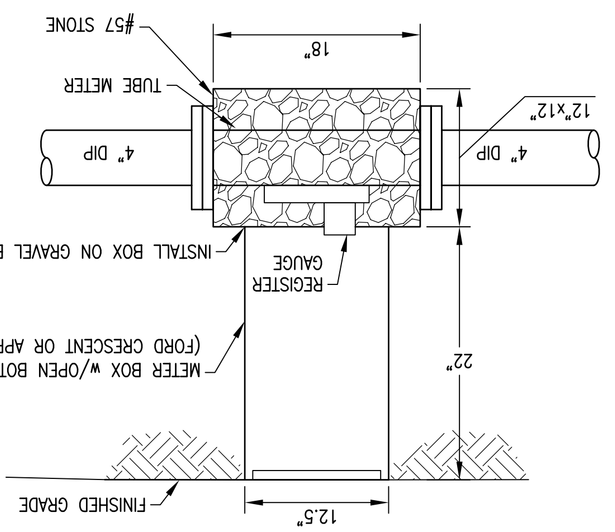

METER BOX DETAIL

NOT TO SCALE

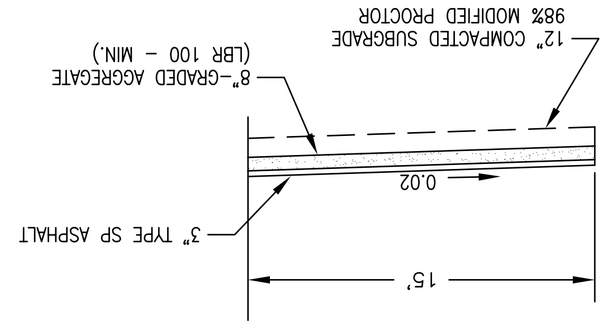

PAVEMENT SECTION

NOT TO SCALE

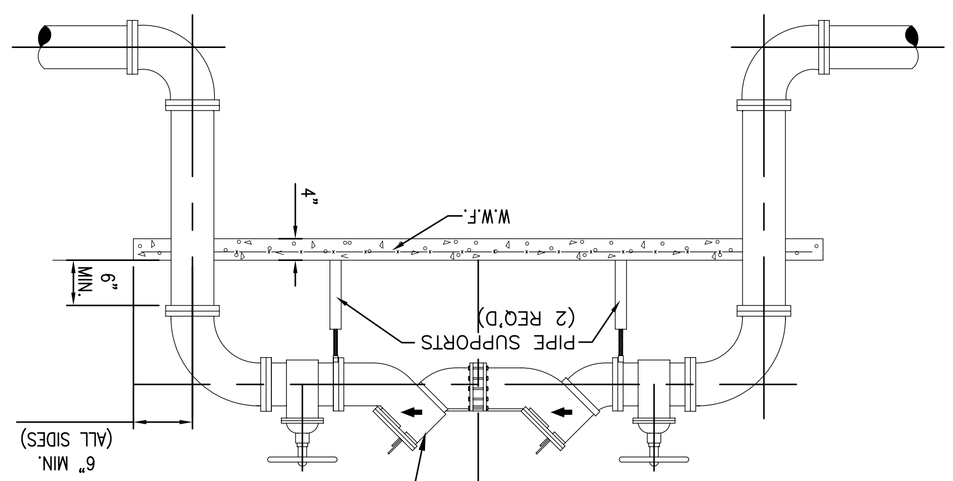

BACKFLOW PREVENTER DETAIL

NOT TO SCALE

NOTES:
1. ABOVE GROUND PIPING, VALVES, BACKFLOW PREVENTER TO BE INSULATED.
2. ALL ABOVE GRADE FITTINGS SHALL BE FLANGED.
3. ALL BELOW GRADE FITTINGS SHALL BE FLANGED.
4. THRUST BLOCKS ARE NOT SHOWN BUT SHALL BE INSTALLED.

REDUCED PRESSURE ZONE BACKFLOW PREVENTER

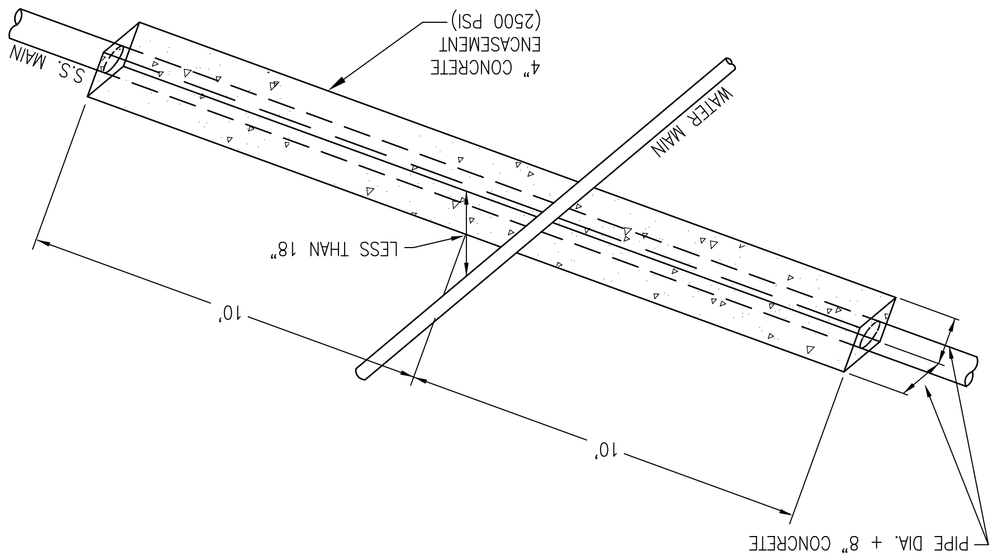

FOR CROSSING: ENCASE AS ABOVE SO THAT THE ENDS OF ENCASEMENT ARE AT LEAST 12' FROM ANY WATER LINE JOINT. WATER LINE JOINT MUST NOT BE CLOSER THAN 5' TO THE POINT OF CROSSING, OR IT MUST ALSO BE ENCASED.

ALTERNATE 1: USE EQUALLY (OR HIGHER) RATED PRESSURE PIPE FOR SEWER WITH NO JOINTS CLOSER THAN 12' APART AND 6" VERTICAL.

ALTERNATE 2: PLACE SEWER LINE INTO STEEL CASING AND CENTER 20' PIECE WITH 4' VERTICAL CLEARANCE AND SEAL ENDS.

FOR PARALLEL: AND 6' TO 10' APART USE ALTERNATE 2, BUT IF MORE THAN 40' IN LENGTH, ALTERNATE 1 MUST BE USED AND JOINTS ARE TO BE STAGGERED. IF LINES MUST BE 3' TO 6' APART, ALTERNATE 1 MUST BE USED WITH A HIGHER RATED PRESSURE PIPE FOR SEWER (i.e., WATER LINE IS DR25 THEN USE DR18 OR 21 FOR SEWER).

SEWER–WATER MAIN SEPARATION AND CLEARANCES

NOT TO SCALE

SANITARY SEWER LINES (GRAVITY OR PRESSURE) SHALL HAVE 18" OR GREATER VERTICAL CLEARANCE BELOW ANY POTABLE WATER LINE WHEN CROSSING. A MINIMUM OF 6" VERTICAL CLEARANCE IS REQUIRED FOR OTHER UTILITIES. HORIZONTAL CLEARANCE BETWEEN SANITARY SEWER LINE THAT IS PARALLEL TO AND LESS THAN 18" BELOW A POTABLE WATER LINE SHALL BE 10' OR GREATER. A MINIMUM OF 30" IS REQUIRED FOR OTHER UTILITIES. IF THIS IS NOT POSSIBLE OR PRACTICAL, SEE BELOW:

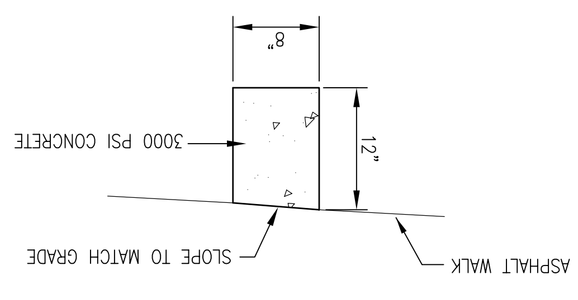

RIBBON CURB

NOT TO SCALE

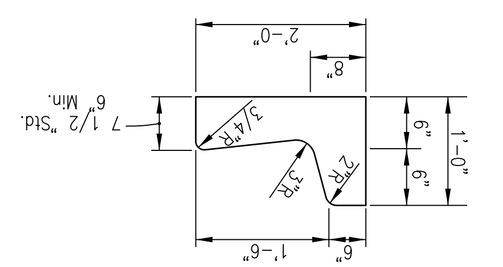

FDOT TYPE F CURB

NOT TO SCALE

SILT FENCE NOTES:
1. FABRIC TO BE PLACED FACING DRAINAGE FLOW
2. FABRIC TO BE PLACED IN A 6" WIDE x 8" DEEP CONTINUOUS TRENCH, THEN BACKFILLED
3. ALL LUMBER TO BE PRESSURE/PRESERVATIVE TREATED
4. SILT FENCE TO BE INSTALLED PRIOR TO COMMENCEMENT OF ANY CONSTRUCTION ACTIVITIES. SILT FENCE TO REMAIN UNTIL 100% PROJECT GRASSING (STABILIZATION) IS ACHIEVED
5. PREFABRICATED SILT FENCES ARE PERMITTED AS LONG AS THEY MEET OR EXCEED FDOT SPECIFICATIONS.

TYPE III SILT FENCE DETAIL

NOT TO SCALE

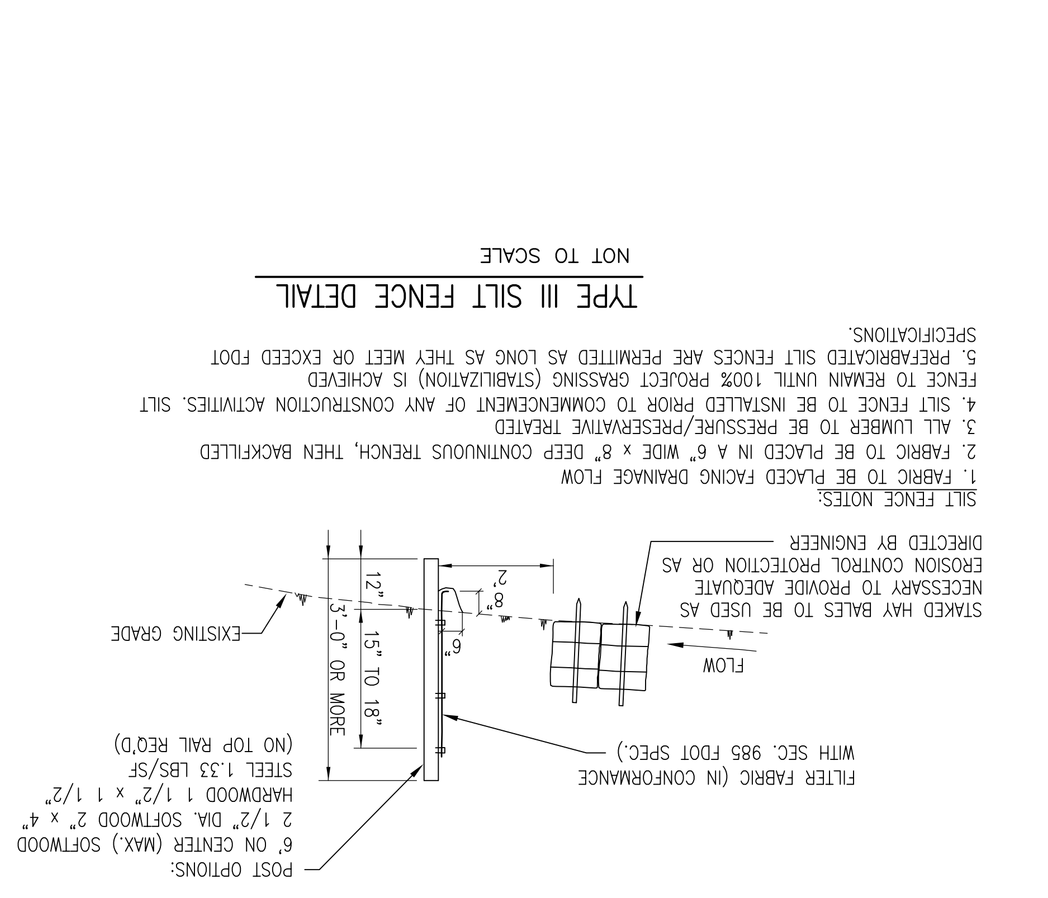

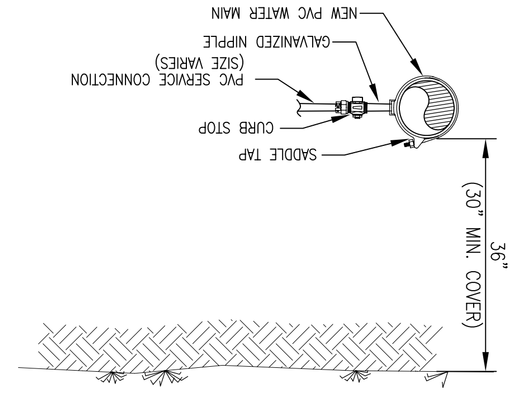

TYPICAL WATER SERVICE

NOT TO SCALE

AIR FORCE SPECIAL OPERATIONS COMMAND

1 SPECIAL OPERATIONS CIVIL ENGINEER SQUADRON
HURLBURT FIELD, FLORIDA

DATE: FEBRUARY 2008
DESIGNED BY: MDL
DRAWN BY: RGG/PLG
BUILDING NO.: 39841.03
PROJECT NO.: 99-1015B-G
SHEET REF.: C500
SHEET NO.:

HURLBURT FIELD
REPLACE WATER MAINS & VALVES
PHASE B-G
DETAILS

	APPROVED	REV #	DATE	DESCRIPTION	APP'D
CIVIL ENGINEER	CHIEF, ENGINEER APPROVED				

1 SCALES/DESC. OFFICE_FORM.DOT (JAN 96)
STANDARD D LAYOUT (24" x 36")

1. SIZE(S)/DESC. OFFICE "FORM 2002" (JAN 96)
STANDARD D LAYOUT (24" x 36")

TYPICAL FIRE HYDRANT INSTALLATION

NOT TO SCALE

NOTES: 1. CONTRACTOR TO ADJUST FIRE HYDRANT TO FINISHED GRADE.
2. HYDRANT CONNECTORS OR D.I.P. SPOOLS WITH MEGALUG JOINT RESTRAINTS OR APPROVED EQUAL.

SECTION

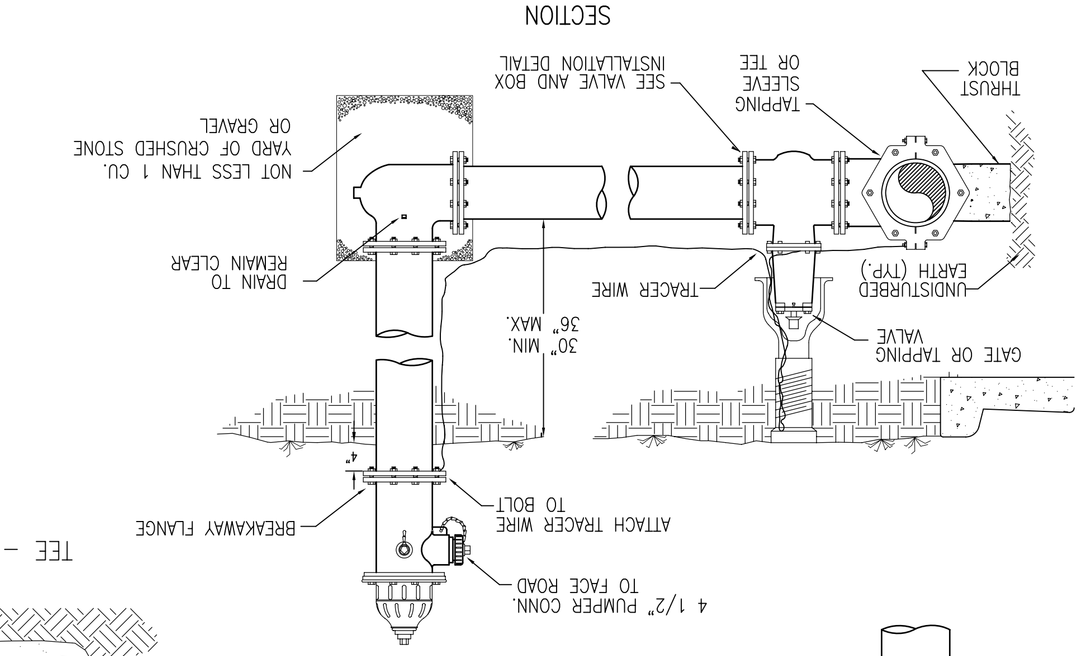

PLAN

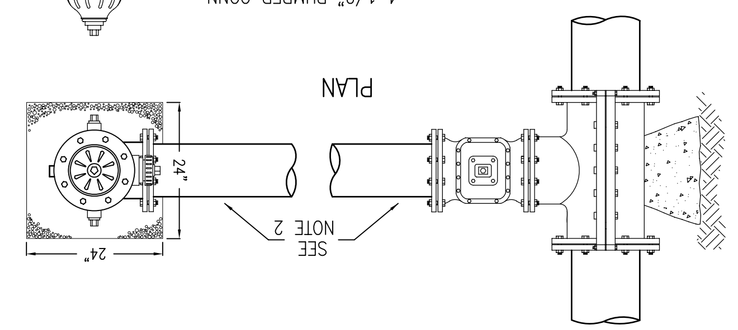

TYPICAL VALVE AND BOX INSTALLATION

NOT TO SCALE

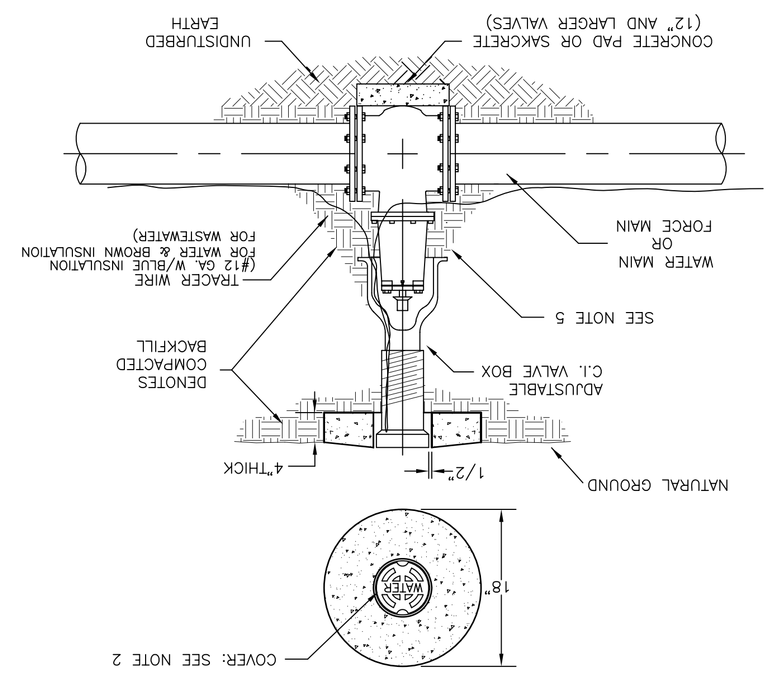

NOTES:
1. VALVE BOX AND BOOT SHALL BE CAST IRON.
2. VALVE COVER SHALL BE MARKED "WATER", OR "SEWER" AS APPLICABLE.
3. VALVE BOX TOP SHALL BE FLUSH WITH FINISHED GRADE OR 1/2" ABOVE NATURAL GROUND LEVEL.
4. GATE VALVE SHALL BE RESILIENT SEAT WITH MECHANICAL JOINT ENDS OR APPROVED EQUAL.
5. EARTH UNDER FLANGE OF VALVE BOX & COLLAR TO BE FIRM AND WELL TAMPED TO ENSURE AGAINST VALVE BOX SETTLING.

NOTE:
ALL VALVES IN GRASSED AREAS ARE TO BE IN PRE-CAST CONCRETE RINGS.

TYPICAL THRUST BLOCK INSTALLATION

NOT TO SCALE

TEE – M.J.

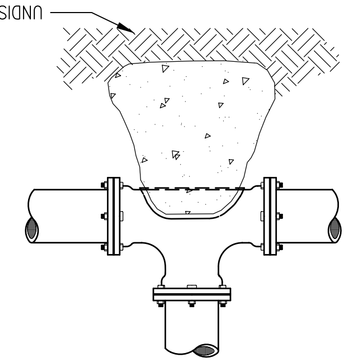

CROSS – M.J.

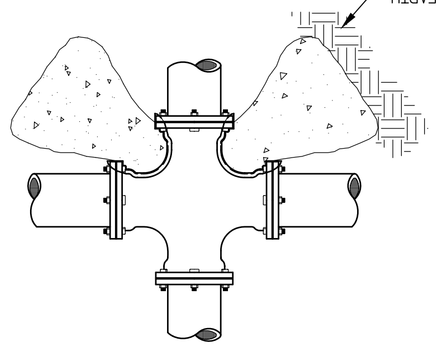

90° BEND – M.J.

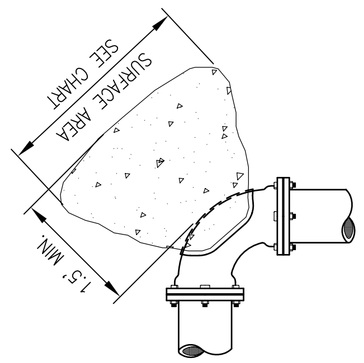

OFFSET – M.J.

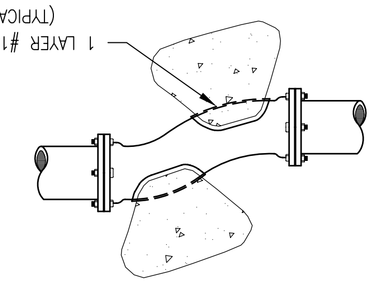

45° BEND – M.J.

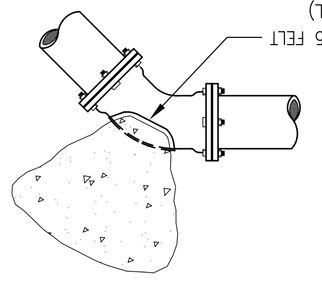

NOTES:
1. ONE LAYER OF #15 FELT TO BE USED TO PREVENT ADHESION OF CONCRETE TO FITTING.
2. ALL THRUST BLOCKS TO BE BACKED BY UNDISTURBED SOIL.
3. THRUST BLOCK DIMENSIONS ARE BASED ON SM SOIL CLASSIFICATION.
4. CONCRETE MIN. 2,500 PSI.

MINIMUM THRUST BLOCK DIMENSIONS:
SURFACE AREA AGAINST UNDISTURBED SOIL

FITTING / PIPE SIZE	DEAD END OR TEE	90° BEND	45° BEND	22.5° BEND
4"	1' x 2'	1.5' x 1.5'	1' x 1.5'	1' x 1'
6"	2' x 2'	2.5' x 2.5'	2' x 1.5'	1' x 1.5'
8"	2.25' x 3'	3' x 3'	2' x 2.5'	1.5' x 1.5'
10"	3.5' x 3'	4' x 3.75'	2.75' x 3'	2' x 2'
12"	4' x 4'	4' x 5'	3' x 4'	2' x 3'
16"	5' x 5.5'	6' x 6.5'	4' x 5'	3' x3.5'

TREE PROTECTION BARRICADE

N.T.S.

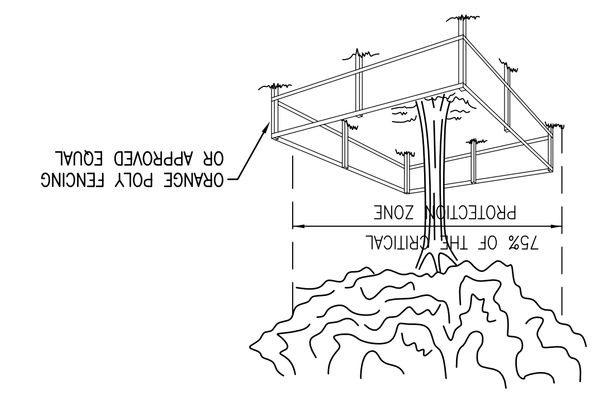

"CRITICAL PROTECTION ZONE" IS THAT AREA SURROUNDING A TREE WITHIN A CIRCLE DESCRIBED BY A RADIUS OF ONE FOOT FOR EACH INCH OF THE TREE'S DIAMETER (DBH)

TYPICAL PIPE BEDDING

NOT TO SCALE

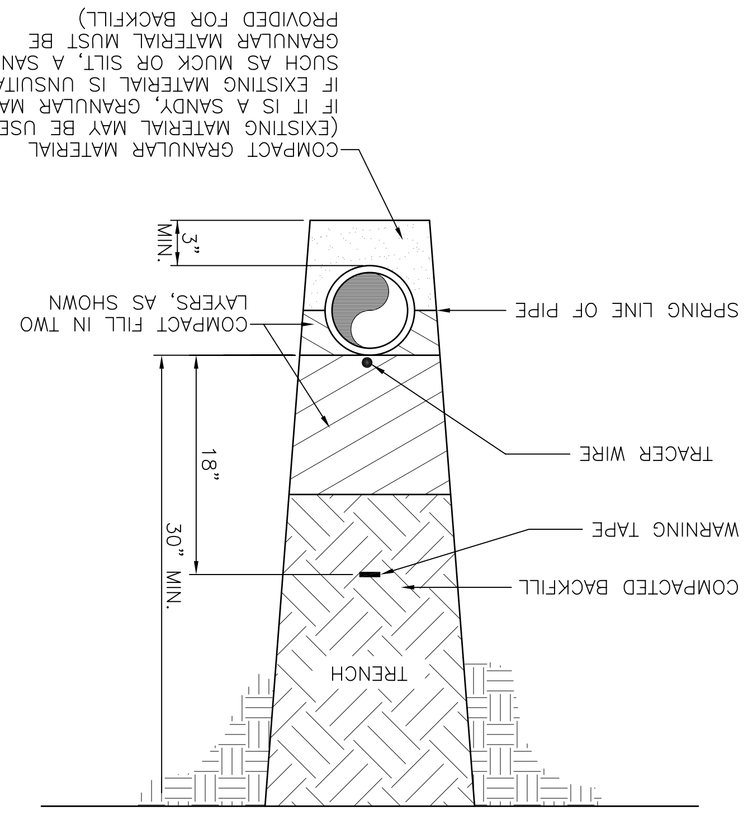

DATE:	FEBRUARY 2008
DESIGNED BY:	MDL
DRAWN BY:	RGG/PLG
BUILDING NO.:	3984103
PROJECT NO.:	99-1015B-G FILE
SHEET REF.:	
SHEET NO.:	C501

1 SPECIAL OPERATIONS CIVIL ENGINEER SQUADRON
HURLBURT FIELD, FLORIDA

AIR FORCE SPECIAL OPERATIONS COMMAND

HURLBURT FIELD
REPLACE WATER MAINS & VALVES
PHASE B-G

DETAILS

	APPROVED	REV #	DATE	DESCRIPTION	APP'D
CIVIL ENGINEER	CHIEF ENGINEER APPROVED				