STATEMENT OF WORK
(Including Errata One)

FY09 DRY DOCK REPAIRS
NOAA Ship KA'IMIMOANA

Vessel Particulars

Year Built:	1989
Builder:	Halter Marine Moss Point, Mississippi
ABS ID:	8900434
Construction:	Welded Steel
Propulsion:	Diesel-Electric, Twin Fixed Propellers
Length Overall:	224 Feet
Beam:	43 Feet
Draft:	15 Feet 1 Inch
Displacement:	2300 Tons

September 19, 2008

TABLE OF CONTENTS

Appendix A
Detailed Statement of Work

Item	Title	Page
	Basic- Class A Items	
101	General Requirements for Work and Temporary Services	2
102	ABS Inspection Assistance, Provide	16
103	Main Propulsion Generator Engine Overhauls; Accomplish	20
104	Dry docking and Undocking, Accomplish	22
105	Underwater Body & Equipment Inspection, Accomplish	24
106	Underwater Body Preservation, Accomplish	26
107	Ground Tackle, Inspect and Repair	28
108	Sea Valves, Repair	30
109	Propellers, Clean and Polish	32
110	Rudders, Inspect and Repair	34
111	Hull Zincs, Replace	35
112	Tail Shaft Survey, Accomplish	36
113	ELINCA Anti-Biofouling System, Inspect	38
	Optional - Class B Items	
201	Additional Government Requirements	40
202	ABS Inspection Assistance, Variable Quantity	42
203	Utilities and Services, Daily Rate	45
204	Drydock Lay Days	48
205	Anchor Chain Replacement, One Shot	49
	Optional - Class C Items	
301	Potable Water Tanks; Blast and Preserve	51
302	Boat Deck; Blast and Preserve	53
303	Steering System Hydraulic Cylinders; Repair	55
304	Gyro Compass; Relocate	57
305	12 kHz Transducer; Replace	67
306	Sea Chest Strainer; Replace	69
307	MJ Door Replacement & Magnetic Door Holdbacks Installation	70
308	Stuffing Tubes; Repair/Replace	72
309	Freeboard; Blast and Preserve	74
310	Refrigeration Eqpt Room Deck; Repair	76
311	SW Ballast Tanks 4-86-1-W & 4-86-2-W; Blast and Preserve	78
312	SW Ballast Tanks 3-94-1-W & 3-94-2-W; Blast and Preserve	80
313	Closed Circuit TV; Overhaul	82
314	ADCP Mount Repair and Resealing; Accomplish	85
315	Main Propulsion Generator Engine Tuneups and Repairs; Accomplish	88
316	Recirc System R1-68-1 Vent Fan; Repair	90
(E1) 317	Buoy Deck Repairs; Accomplish	92

Appendix D
Industry Standards and Public Documents

No industry standards or public documents are provided with the solicitation. Referenced industry standards and public documents are:

American Bureau of Shipping, Rules for Building and Classing Steel Vessels
Code of Federal Regulations, Title 29,1915.1001
Code of Federal Regulations, Title 40, Subchapter M, National Emission Standard for Asbestos
Code of Federal Regulations, Title 46, Subchapter J, Electrical Engineering
Code of Federal Regulations, Title 46, Subchapter F, Marine Engineering
IEEE Std. 45; Recommended Practice for Electric Installation on Shipboard
Steel Structures Painting Council, Surface Preparation Specification No. 10; Near White Metal Cleaning (SPCC-10)
Steel Structures Painting Council, Surface Preparation Specification No. 11, Power Tool Cleaning to Bare Metal (SPCC-11)

Appendix E
Drawings

Drawings are distributed on CD ROM with this solicitation.

Referenced Drawings

	Drawing No.	Title
	KA-085-06	Docking Plan
	KA-085-07	Booklet of General Plans
	101-6233543	Shell Expansion
	101-6233553	Structural Details & General Notes
	110-6233551	Module No.2 Structural Assembly
	110-6233555	Module No. 6, P & S Structural Assembly
	KA-123-01	Sea Chest & Structural Mods, Fr 40 Main Deck & Below
(E1)	KA-132-01	Structural Modifications Frame 72-86
	150-6233575	Module No. 10C Strl Assy
	163-6233563	Sea Chests
	167-6233588	List of Structural Closures
	243-6233870	Main Propulsion Shaft Installation Arrangement
	426-6233691	Gyro Compass System Elem & Iso Diagram
	512-6233801	HVAC Main Deck
	KA-526-01	Deck Drain Modification
	524-6233839	Aux Sea Water Cooling Sys Arrnagement
	551-6233880	Compressed Air System Arrangement
	561-6233894	Steering Gear Arrangement
	562-6233911	Rudder Stock carrier & Bearing
	568-1062450	General Arrangement S-300L Tunnel Thruster
	568-6233884	Bow Thruster Arrangement
	633-6233582	Zinc, Arrangement and Details
	17-171-01	AIRMAR Transducer

ITEM 317 Title: Buoy Deck Repairs; Accomplish W/R No. N/A

1 SCOPE:

1.1 Objective: Remove the existing plywood and insert the deck area at the top of the ladder on the Buoy Deck.

2 REFERENCE DOCUMENTS:

2.1 NOAA Standard Specification S0100, Implementation and Conduct of Check Points

2.2 NOAA Standard Specification S2906, Arc Welding of Waterborne Vessels

2.3 Drawing KA-132-01 Rev C, Structural Modifications Frame 72-86

2.4 Steel Structures Painting Council, Surface Preparation Specification No. 10, Near White Blast Cleaning (SPCC-10)

3 GOVERNMENT FURNISHED MATERIAL (GFM):

3.1 None

4 REQUIREMENTS:

4.1 Remove and scrap the plywood insert and deteriorated flat bar supports from the Buoy Deck, Frame 82, centerline.

4.2 Cut out the surrounding deck plate back to sound metal, from the top of the ladder to forward of Frame 82.

4.2.1 Chip and grind surfaces flush in way of removals.

4.3 Insert the area in way of the above removals (approximately 10 sq ft) with 10.2# steel plate using 2.3 as guidance.

4.4 Prepare and paint the inserted deck as follows in accordance with the paint manufacturer's recommendations:

4.4.1 Accomplish the requirements of 2.4 on the new deck plate.

4.4.2 Apply two coats of American Safety Technologies MS7CZ Primer or equal.

4.4.3 Apply one coat of American Safety Technologies 400L (Type 1, Non-Abrasive, low profile) non-skid or equal.

4.4.4 Apply one coat of American Safety Technologies MS200 topcoat or equal.

4.5 Touch-up Painting - clean all damaged paint to sound paint or bare metal. Clean all exposed metal free of foreign matter and corrosion. Spot prime all damaged paint or exposed metal. Coat all new or damaged areas with 2 coats of finish paint to match the surrounding area. Epoxy paint must be used over galvanized metal.

5 QUALITY ASSURANCE:

5.1 As required by 2.1 through 2.4.

6 Notes:

6.1 None

Appendix E

Drawings

Drawings are distributed on CD ROM with this solicitation.

Referenced Drawings

	Drawing No.	Title
	KA-085-06	Docking Plan
	KA-085-07	Booklet of General Plans
	101-6233543	Shell Expansion
	101-6233553	Structural Details & General Notes
	110-6233551	Module No.2 Structural Assembly
	110-6233555	Module No. 6, P & S Structural Assembly
	KA-123-01	Sea Chest & Structural Mods, Fr 40 Main Deck & Below
(E1)	KA-132-01	Structural Modifications Frame 72-86
	150-6233575	Module No. 10C Strl Assy
	163-6233563	Sea Chests
	167-6233588	List of Structural Closures
	243-6233870	Main Propulsion Shaft Installation Arrangement
	426-6233691	Gyro Compass System Elem & Iso Diagram
	512-6233801	HVAC Main Deck
	KA-526-01	Deck Drain Modification
	524-6233839	Aux Sea Water Cooling Sys Arrnagement
	551-6233880	Compressed Air System Arrangement
	561-6233894	Steering Gear Arrangement
	562-6233911	Rudder Stock carrier & Bearing
	568-1062450	General Arrangement S-300L Tunnel Thruster
	568-6233884	Bow Thruster Arrangement
	633-6233582	Zinc, Arrangement and Details
	17-171-01	AIRMAR Transducer

TITA-132-01 | 1 | C

GENERAL NOTES

1. THE PURPOSE OF THIS DRAWING IS TO PROVIDE STRUCTURAL MODIFICATIONS FOR INSTALLATION OF NEW SCIENTIFIC STOREROOM, DIVE LOCKER, MAIN DECK GRATING AND FORECASTLE DECK EXTENSIONS TO SUPPORT W.I. C004 AND C013.
2. NUMBERS AND LETTERS IN PARENTHESES, AFTER THE PLAN, ELEVATION, SECTION OR DETAIL TITLE, INDICATES THE VIEW OF THE DRAWING FROM WHICH THE VIEW IS TAKEN.

(NOTES CONTINUED ON SH 2)

BILL OF MATERIALS

PN	QTY	MFR #/NSN	DESCRIPTION	MATERIAL	MATL SPEC	SCE	CFM	UNIT WT	REMARKS
1	390 SF	-	PLATE, 10.2# (1/4)	STEEL	ASTM-A36			10.2	
2	389 SF	-	PLATE, 12.75# (5/16)					12.75	
3	9 SF	-	PLATE, 15.3# (3/8)					15.3	
4	196 LF	-	ANGLE, 3" x 2" x 1/4"					4.1	
5	288 LF	-	ANGLE, 5" x 3" x 5/16"					8.2	
6	97 LF	-	ANGLE, 6" x 4" x 5/16"					10.3	
7	1 LF	-	FLAT BAR, 1/2" x 1"					1.70	
8	56 LF	-	FLAT BAR, 5/16" x 3"					3.19	
9	27 LF	-	PIPE, 1 1/2" NPS, SCHEDULE 40					2.72	
10	59 LF	-	PIPE, 4" NPS, SCHEDULE 40					10.79	

BILL OF MATERIAL CONT ON SHEET 2

REVISIONS

REV	SHT	ZONE	ITEM	DESCRIPTION	DATE	APRVD
A	1 2	6-D 12-C		DRAWING REVISED TO REFLECT THE AS-BUILT CONDITION & INCORPORATE PPR 145S, 152S, 155S & DCN 254-S-10 & 277-S-14 FOR RECORD ONLY. 1. CHG L/M QTY OF PC 1 FROM 396 TO 390, CHG QTY PC 4 FROM 184 TO 196, CHG QTY PC 24 FROM 812 TO 805, ADDED PC 37, QTY PC 9 FROM 20 LF TO 27 LF.	12/26/95	CDIM G.WING/S/

CONT ON SHT 2

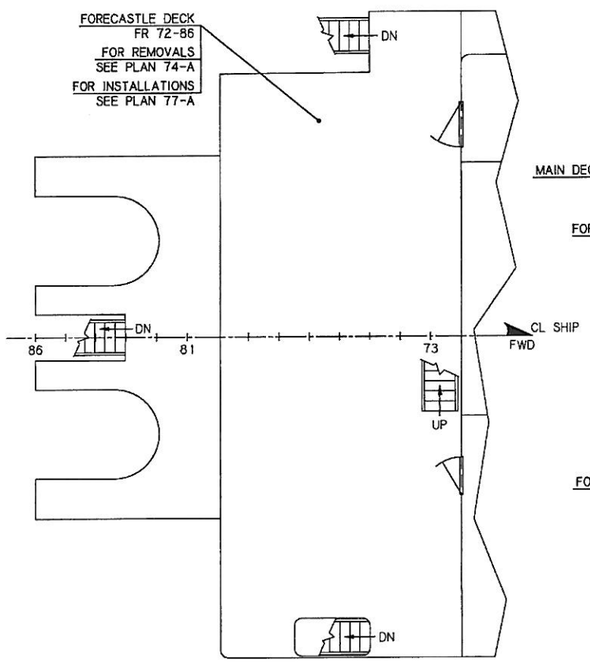

KEY PLAN 7-A
FORECASTLE DECK, FR 72-86
SCALE: 1/4" = 1'-0"

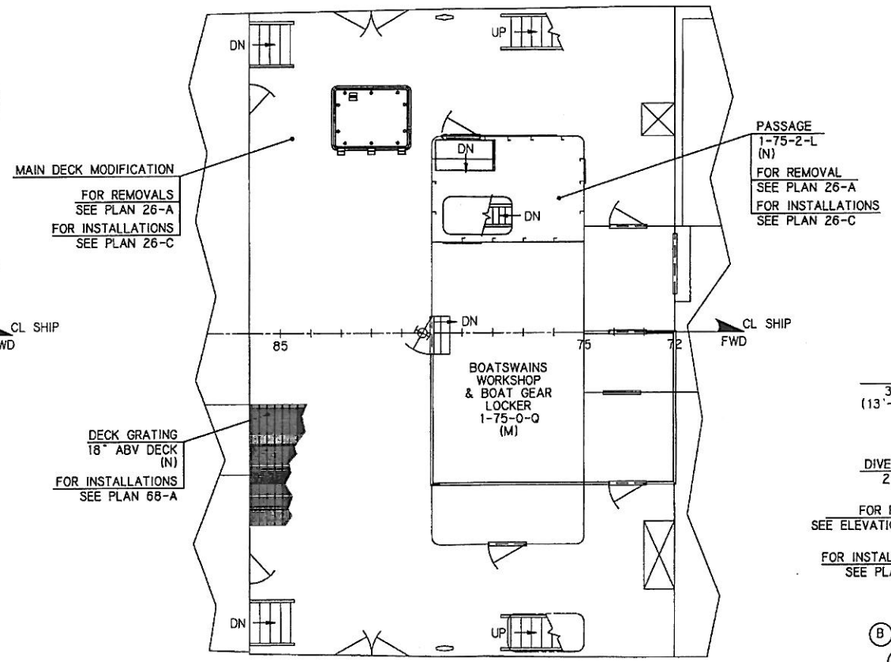

KEY PLAN 4-A
MAIN DECK, FR 72-86
SCALE: 1/4" = 1'-0"

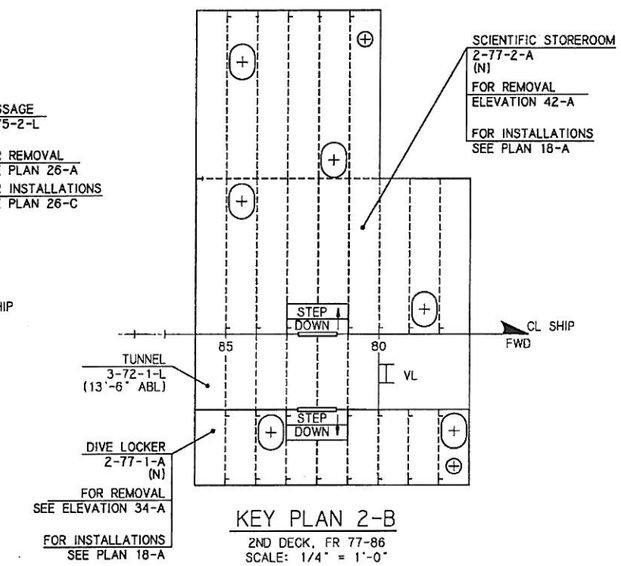

KEY PLAN 2-B
2ND DECK, FR 77-86
SCALE: 1/4" = 1'-0"

REV	WT OR (ESWBS)	WT (LBS)	I R XI OR XR	VCG REF BL	LCG REF ⊠	F OR A	TCG REF CL	P/S OR O	VAL BY
C	132	113	R	20.9	72.1	A	0.0	O	
B	132	1039	I	23.7	71.0	A	0.0	O	
A	132	48	I	16.1	64.4	A	3.89	P	
-	132	11,439	I	16.1	64.4	A	3.89	P	
-	132	14,325	R	21.5	64.8	A	2.38	P	

WEIGHT CONTROL DATA

WEIGHT IN POUNDS TO THE NEAREST POUND
LEVERS IN FEET TO THE NEAREST TENTH OF A FOOT
USE SEPARATE LINES FOR EACH WT GP, REV, WT INSTL, WT RMV
I=INSTALL R=REMOVE XI=LOAD ITEM INSTALLED XR=LOAD ITEM REMOVED
F=FWD A=AFT P=PORT S=STBD O=CENTERLINE

NO	TITLE	DRAWING NO
*15	STRUCTURAL DETAILS & GENNOTES	101-6233553D
14	MODULE 10-C STRL ASSY	150-6233575
13	TEST MEMO HYDROSTATIC TESTING FOR TANKS AND TRUNKS	TM-986-100.03
12	TEST MEMO AIR HOSE TESTING FOR WATERTIGHT STRUCTURES	TM-986-100.01
11	STRUCTURAL MODS AFT FR 85	TITA-131-01
10	OVFL, AE & ST MODS	TITA-506-01
9	PAINT SCHEDULE	631-6233516C
8	INSULATION SHEATHING & DECK COVERING MODS	TITA-634-01
7	LABEL PLATE LIST	TITA-602-01
6	LOCK LIST	TITA-604-01
5	SCIENTIFIC STRM & DIVE LKR, ARR & DETAILS	TITA-672-01
4	LADDER LIST	TITA-623-01
3	ACCESS CLOSURE LIST	TITA-167-01
*2	GRATING MAIN DECK	622-6233577G
1	MODULE NO.7 STRL ASSY	110-6233558G

REFERENCES

APPROVALS		
ABS	HAVERKAMP/s/	06/26/95

NATIONAL OCEANIC AND ATMOSPHERIC ADMINISTRATION
OFFICE OF NOAA CORPS OPERATIONS

NOAA SHIP TITAN

STRUCTURAL MODIFICATIONS
FRAME 72-86

CDI MARINE COMPANY
510 WASHINGTON AVE.
BREMERTON WA. 98337

MARITIME CONTRACTORS, INC
201 HARRIS AVE
BELLINGHAM WA. 98225

	SIGNATURE	DATE
PREPARED:	WILLIAMS/ESSEE	06/12/95
CHECKED:	GLENN SHOOK	08/14/95
APPROVED:	J. GALLAGHER/s/	09/05/95

SIZE	NOAA CAGE NO	NOAA DRAWING NUMBER	REV
D	0YLJ5	TITA-132-01	C

SCALE: AS SHOWN | CAD FILENAME: NONE | SHEET 1 OF 12

AREA:

GENERAL NOTES (CONTINUED)

3. ALL WORKMANSHIP AND MATERIALS SHALL BE IN ACCORDANCE WITH AMERICAN BUREAU OF SHIPPING, (ABS) RULES AND REGULATIONS.

4. ALL NEW STEEL SHALL BE PRIMED AND COATED IN ACCORDANCE WITH THE REFERENCE 9.

5. ALL WELDING SHALL MEET THE REQUIREMENTS OF ABS.

6. GRIND SMOOTH ALL SHARP EDGES WHICH MAY BE INJURIOUS TO PERSONNEL AND EQUIPMENT.

7. AN ASTERISK (*) BESIDE A REFERENCE SIGNIFIES THAT THE REFERENCE REQUIRED BY THE INSTALLING ACTIVITY TO ACCOMPLISH WORK SPECIFIED BY THIS DRAWING.

8. TEMPLATE ALL WORK FROM SHIP AND NEW EQUIPMENT.

9. ALL MATERIAL SHOWN CROSS-HATCHED SHALL BE REMOVED.

10. TEMPORARY REMOVAL AND REINSTALLATION OF INTERFERENCES NECESSARY TO ACCOMPLISH WORK SHALL BE THE RESPONSIBILITY OF THE SHIPYARD.

11. REPAIR ALL SURFACES DAMAGED BY WELDING AND/OR THE REMOVAL AND INSTALLATION OF STRUCTURE AND EQUIPMENT TO MATCH SURROUNDING STRUCTURE.

12. THIS DRAWING MODIFIES REFERENCES 1, 2 AND 14.

13. ALL SNIPES SHALL BE 1-1/2" X 1-1/2" UNLESS OTHERWISE NOTED.

14. INSULATION SHALL BE REPAIRED IN WAY OF NEW WORK IN ACCORDANCE WITH REFERENCE 8.

15. AFTER COMPLETION OF ALL STRUCTURAL WORK IN DIVE LOCKER (2-77-1-A) AND SCIENTIFIC STOREROOM (2-77-2-A), AN AIR TIGHTNESS TEST SHALL BE PERFORMED IN THE MODIFIED FUEL TANKS (2-72-1-F, 2-72-2-F AND 2-80-2-F) IN ACCORDANCE WITH REFERENCE 13.

16. DECK GRATING SHALL BE INSTALLED IN ACCORDANCE WITH REFERENCE 2 & PLAN 68-A, AND AS FOLLOWS:

    GRATING SHALL BE SECURED WITH CLIP (PN 27) SPACED 18" APART ALONG THE BEARING BAR ENDS OF EACH GRATING SECTION.

    BEARING BARS TO RUN PORT AND STARBOARD.

    VERTICAL SUPPORTS (PN 4), WHERE INDICATED, ARE TO BE SPACED ON 48" CENTERS UNLESS OTHERWISE SHOWN.

    IRREGULARITIES IN WIDTH OF GRATING PANELS ADJACENT TO BULWARK TO BE CUT AND INSTALLED TO SUIT.

    LOCATING DIMENSIONS FOR GRATING SHALL BE CHECKED AT INSTALLATION TO VERIFY ACTUAL LOCATIONS WILL CLEAR ALL INTERFERENCES.

    INSTALLING ACTIVITY TO PROVIDE HINGED GRATING SECTIONS FOR ACCESS TO ALL MANHOLES, DOORS AND BUOY PADEYES BELOW DECK GRATING LEVEL.

17. 48" x 60" WATERTIGHT HATCH (PN 12) SHALL BE INSTALLED WITH A MODIFIED COAMING TO PROVIDE A FINISHED HEIGHT OF 18 1/2" ABOVE THE MAIN DECK MAKING IT FLUSH WITH THE TOP OF THE NEW DECK GRATING (PN 24). AFTER COMPLETION OF INSTALLATION, A WATERTIGHTNESS TEST SHALL BE PERFORMED IN ACCORDANCE WITH REFERENCE 12.

18. NEOPRENE ANTI-RATTLE STRIPS, GASKET PN 32 (McMASTER-CARR, PN 8568K31) SHALL BE CEMENTED WITH PN 33 (McMASTER-CARR PN 7506A2) BETWEEN THE GRATING SUPPORT FRAMING AND GRATING.

BILL OF MATERIALS

PN	QTY	MFR #/NSN	DESCRIPTION	MATERIAL	MATL SPEC	SCE	UNIT WT	REMARKS
11	2 LF	-	PIPE, 12" NPS, SCHEDULE 40	STEEL	ASTM-A36	CFM	53.56	-
12	1	-	48" x 60" HATCH, WATERTIGHT	VARIOUS	VARIOUS		-	ORDERED ON REF 3
13	14 LF	-	BAR, FLAT, 3/8" x 6"	STEEL	ASTM-A36		7.65	-
14	6	-	15" x 23" MANHOLE, FLUSH BOLTED PL	VARIOUS	VARIOUS		-	ORDERED ON REF 3
15	1	-	INCLINE LADDER				-	ORDERED ON REF 4
16	1	-	30" x 66" DOOR, RH, FT				-	ORDERED ON REF 3
17	1	-	30" x 66" DOOR, LH, FT				-	
18	1	-	30" x 69" DOOR, WEATHERTIGHT			RELOC	-	RELOC FROM REF 3 AS CONVERSION ITEM NO. 19
19	8	McMASTER CARR	SCREW, MACHINE, CS HD 3/8-16UNC-2A L=7/8"	CRES	ASTM-F593	CFM	-	FOR BILGE DRAINWELL STRAINER PLATE
20	1650		SCREW, MACHINE, TRS PHH 10-24UNC-2A L=2"				-	FOR GRATING FASTENER
21	2000		SCREW, MACHINE, CS HD #10-24UNC-2A L=1-1/4"				-	FOR HINGED GRATING PANELS
22	360		NUT, #10-24UNC		FED-STD-66		-	
23	50		HINGE, 2" x 2" x .062" THK	CRES	COML		-	CATALOG 96, #1488A13 FOR HINGED GRATING PANELS
24	805 SF	McNICHOLS CO	GRATING, 1 1/2" "I" BAR	FIBERGLASS	COML		3.8	CORGRATE, GFG-150
25	22 LF	-	BAR, FLAT, 1/4" x 2"	STEEL	ASTM-A36		1.7	-
26	12 LF	-	CHANNEL, 3" x 5#				5.0	-
27	1650	McNICHOLS CO	FASTENER, GRATING				0.16	#MSSMCI, 1-1/2"
28	6 LF	-	10" x 22# I/T				20	-
29	14 LF	-	PLATE, 20.4# (1/2)				20	C/F W 16 x 40#
30	19 LF	-	BAR, FLAT, 5/16" x 6"				6.38	-
31	15 LF	-	BAR, FLAT, 1/4" x 4"				3.4	-
32	420 LF	McMASTER CARR	GASKET, NEOPRENE RUBBER SHEETING	SYNTH RBR	COML		-	2" x 1/16" THK SEE GN 18
33	AR	-	ADHESIVE, NEOPRENE	-			-	SEE GN 18
34	1	-	LABEL PLATE	-	-		-	ORDERED ON REF 7
35	2 SF	-	PLATE, 30.6# (3/4)	STEEL	ASTM-A36		30.6	-
36	8 LF	-	BAR, FLAT, 1/8" x 2"				0.85	-
37	2 LF	-	PIPE, 2" NPS, SCHEDULE 40				4.4	-
38	11.5 LF	-	BAR, FLAT, 3/8" x 2"				2.6	-
39	1	-	TANK, HYDRAULIC OIL STORAGE		-	RELOC	800	PREVIOUSLY REMOVED SURTASS ARRAY FLUID SERV TK
40	1	-	FOUNDATION, 36"x 36", 3"x 3"x 1/4" ANGLE		-	RELOC	58.8	BOLTED TO PN 39
41	7 LF	-	ANGLE, 3"x 3"x 1/4"		ASTM-A36	CFM	4.9	-

REVISIONS

REV	SHT	ZONE	ITEM	DESCRIPTION	DATE	APRVD
A	1	2-B		2. CHG WT & MOMENT.	12/26/95	CDIM G.WING/S/
	4	26-C		3. MODIFIED PLAN 26-C		
	4	31-C		4. MODIFIED DETAIL 31-C.		
	8	60-C		5. MODIFIED SECTION 60-C.		
	8	64-D		6. MODIFIED SECT 64-C.		
	8	62-C		7. ADDED ELEVATION 62-C.		
				THIS REQUIRES PRODUCTION WORK AND RESOLVES PPR 185S & PPR 190S.		
B	4	26-C		1. ADDED SH 12 CORRECTED L/M AND PLAN 26-C.	1/19/96	CDIM G.WING/S/
	12	ALL		THIS REQUIRES PRODUCTION WORK AND RESOLVES CONREP 191.		
C	1	2-B		1. CHG WT & MOMENT.	2/20/96	CDIM G.WING/S/
	2	12-C		2. PN 41 QTY CHG FROM 30 LF.		
	12	ALL		3. MODIFIED PLAN 92-A, EL 90-A & 90-B TO REFLECT THE AS-BUILT CONDITION.		
				REVISION FOR RECORD ONLY.		

SIZE	NOAA CAGE NO	NOAA DRAWING NUMBER	REV
D	0YLJ5	TITA-132-01	C
SCALE: AS SHOWN			SHEET 2 OF 12

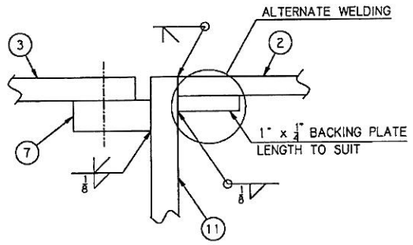

DETAIL 23-C (21-C)
SCALE: FULL

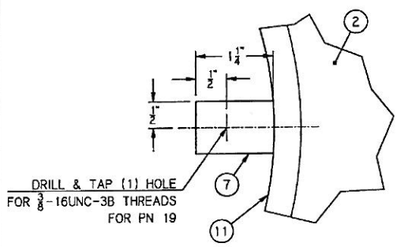

DETAIL 23-B (21-A)
SCALE: FULL

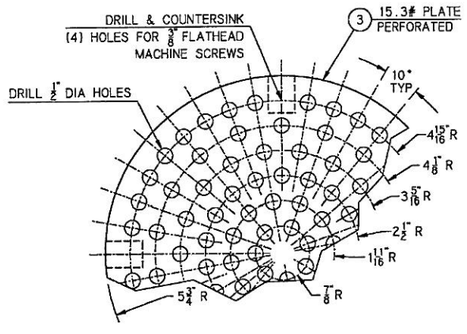

DETAIL 23-A (21-A)
STRAINER PLATE
SCALE: 6" = 1'-0"

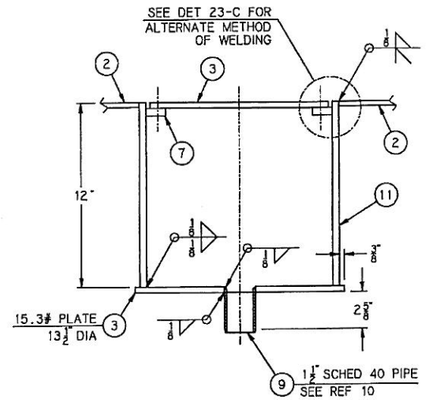

SECTION 21-C (21-A)
SCALE: 3" = 1'-0"

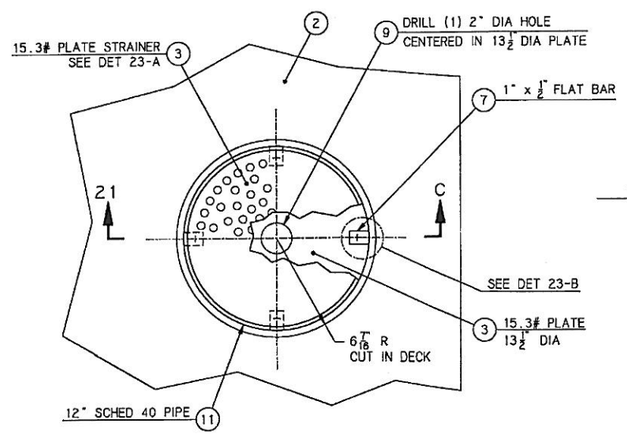

DETAIL 21-A (18-A)
TYPICAL BILGE DRAINWELL
SCIENTIFIC STOREROOM (2-77-2-A)
DIVE LOCKER (2-77-1-A)
SCALE: 3" = 1'-0"

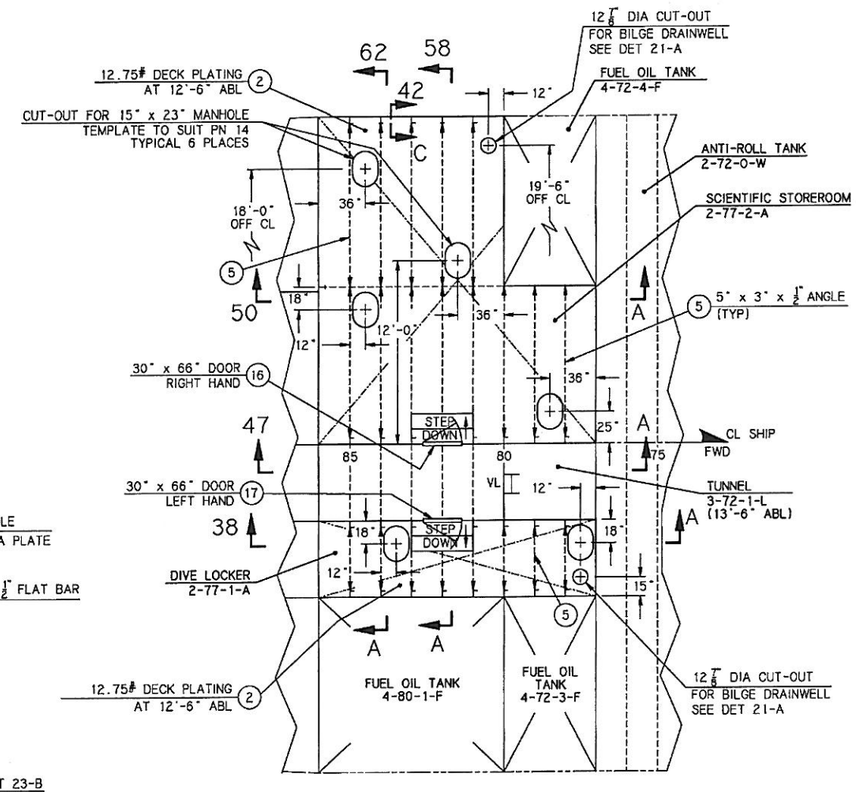

PLAN 18-A (2-B)
INSTALLATIONS
SCIENTIFIC STOREROOM (2-77-2-A)
DIVE LOCKER (2-77-1-A)
SCALE: 1/4" = 1'-0"

SIZE	NOAA CAGE NO	NOAA DRAWING NUMBER	REV
D	0YLJ5	TITA-132-01	A
SCALE: AS SHOWN		SHEET 3 OF 12	

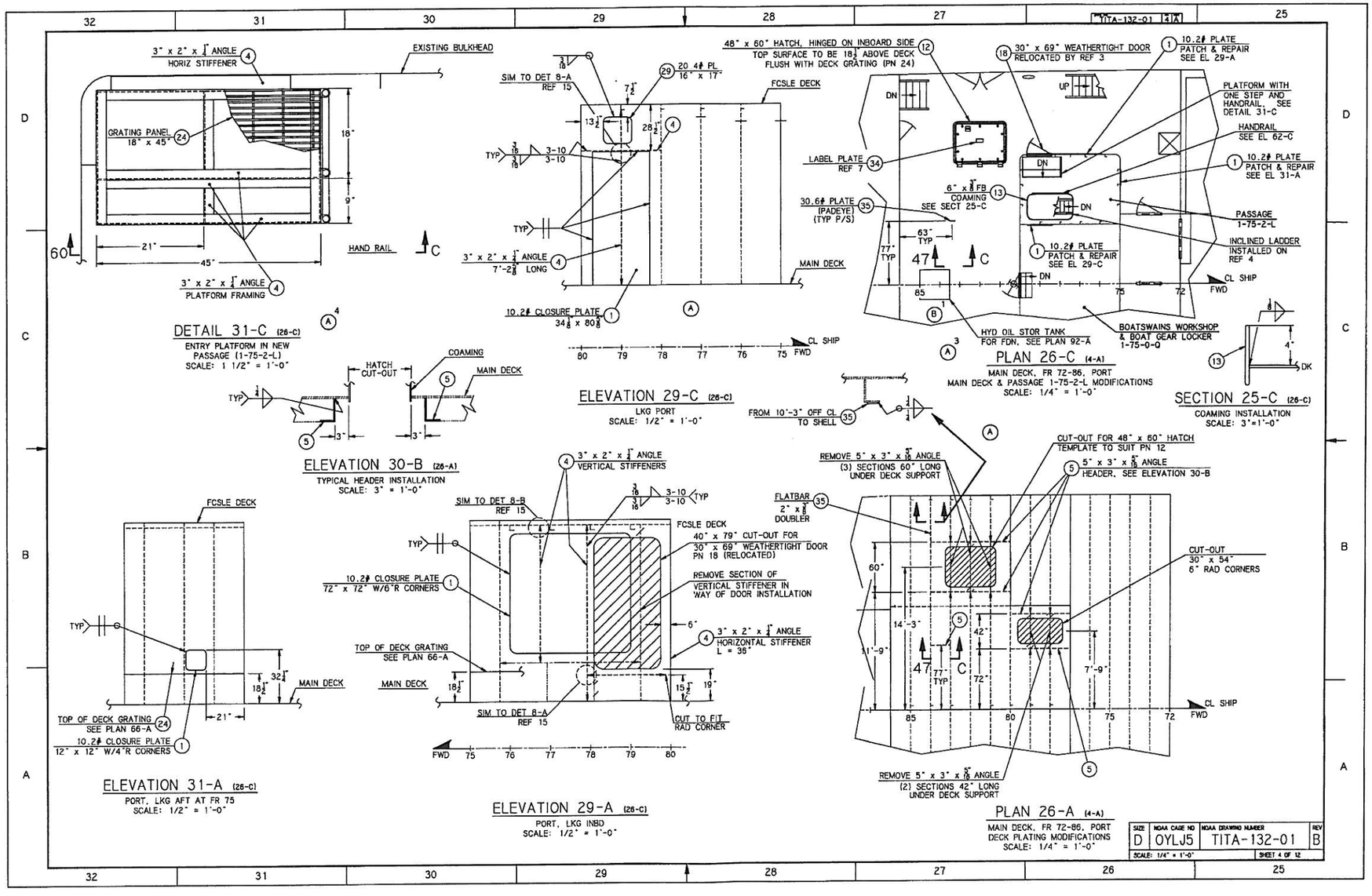
TITA-132-01 4 A
3" x 2" x 1/4" ANGLE
HORIZ STIFFENER
EXISTING BULKHEAD
GRATING PANEL
18" x 45"
HAND RAIL
3" x 2" x 1/4" ANGLE
PLATFORM FRAMING
DETAIL 31-C (26-C)
ENTRY PLATFORM IN NEW PASSAGE (1-75-2-L)
SCALE: 1 1/2" = 1'-0"
SIM TO DET 8-A
REF 15
20.4# PL
16" x 17"
FCSLE DECK
3-10
3-10
TYP
3" x 2" x 1/4" ANGLE
7'-2 5/8" LONG
MAIN DECK
10.2# CLOSURE PLATE
34 1/8" x 80 1/8"
CL SHIP
FWD
ELEVATION 29-C (26-C)
LKG PORT
SCALE: 1/2" = 1'-0"
48" x 60" HATCH, HINGED ON INBOARD SIDE
TOP SURFACE TO BE 18 1/2" ABOVE DECK
FLUSH WITH DECK GRATING (PN 24)
30" x 69" WEATHERTIGHT DOOR
RELOCATED BY REF 3
10.2# PLATE
PATCH & REPAIR
SEE EL 29-A
PLATFORM WITH ONE STEP AND HANDRAIL. SEE DETAIL 31-C
HANDRAIL
SEE EL 62-C
10.2# PLATE
PATCH & REPAIR
SEE EL 31-A
LABEL PLATE
REF 7
6" x 3/8" FB
COAMING
SEE SECT 25-C
30.6# PLATE
(PADEYE)
(TYP P/S)
PASSAGE
1-75-2-L
INCLINED LADDER INSTALLED ON REF 4
10.2# PLATE
PATCH & REPAIR
SEE EL 29-C
HYD OIL STOR TANK
FOR FDN. SEE PLAN 92-A
BOATSWAINS WORKSHOP
& BOAT GEAR LOCKER
1-75-0-Q
PLAN 26-C (4-A)
MAIN DECK, FR 72-86, PORT
MAIN DECK & PASSAGE 1-75-2-L MODIFICATIONS
SCALE: 1/4" = 1'-0"
SECTION 25-C (26-C)
COAMING INSTALLATION
SCALE: 3"=1'-0"
HATCH CUT-OUT
COAMING
MAIN DECK
ELEVATION 30-B (26-A)
TYPICAL HEADER INSTALLATION
SCALE: 3" = 1'-0"
FROM 10'-3" OFF CL TO SHELL
REMOVE 5" x 3" x 5/16" ANGLE
(3) SECTIONS 60" LONG
UNDER DECK SUPPORT
CUT-OUT FOR 48" x 60" HATCH
TEMPLATE TO SUIT PN 12
5" x 3" x 5/16" ANGLE
HEADER, SEE ELEVATION 30-B
FLATBAR
2" x 3/8"
DOUBLER
3" x 2" x 1/4" ANGLE
VERTICAL STIFFENERS
SIM TO DET 8-B
REF 15
40" x 79" CUT-OUT FOR
30" x 69" WEATHERTIGHT DOOR
PN 18 (RELOCATED)
10.2# CLOSURE PLATE
72" x 72" W/6"R CORNERS
REMOVE SECTION OF
VERTICAL STIFFENER IN
WAY OF DOOR INSTALLATION
3" x 2" x 1/4" ANGLE
HORIZONTAL STIFFENER
L = 36"
TOP OF DECK GRATING
SEE PLAN 66-A
SIM TO DET 8-A
REF 15
CUT TO FIT
RAD CORNER
CUT-OUT
30" x 54"
6" RAD CORNERS
REMOVE 5" x 3" x 5/16" ANGLE
(2) SECTIONS 42" LONG
UNDER DECK SUPPORT
ELEVATION 29-A (26-C)
PORT, LKG INBD
SCALE: 1/2" = 1'-0"
TOP OF DECK GRATING
SEE PLAN 66-A
10.2# CLOSURE PLATE
12" x 12" W/4"R CORNERS
ELEVATION 31-A (26-C)
PORT, LKG AFT AT FR 75
SCALE: 1/2" = 1'-0"
PLAN 26-A (4-A)
MAIN DECK, FR 72-86, PORT
DECK PLATING MODIFICATIONS
SCALE: 1/4" = 1'-0"
SIZE D
NOAA CAGE NO 0YLJ5
NOAA DRAWING NUMBER TITA-132-01
REV B
SCALE: 1/4" = 1'-0"
SHEET 4 OF 12

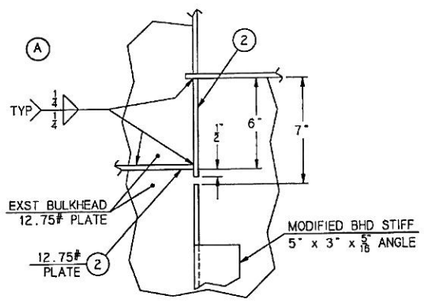

DETAIL 39-C (38-A & 47-A)

DETAIL 39-C1 SIMILAR OPP HAND
INSTALLATION DETAIL
DECK END BELOW ANTIROLL TANK
FRAME 77, LOOKING PORT
SCALE: 3"= 1'- 0"

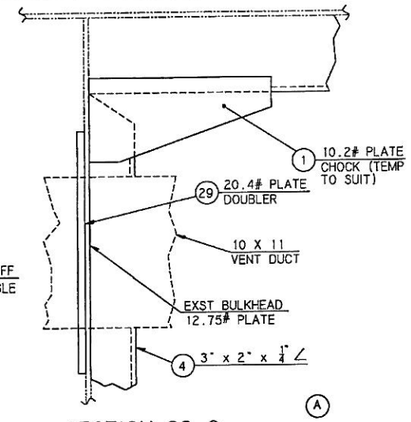

SECTION 38-C (29-C)

STIFFENER MOD FOR
HVAC PENETRATION
SCALE: 2" = 1'-0"

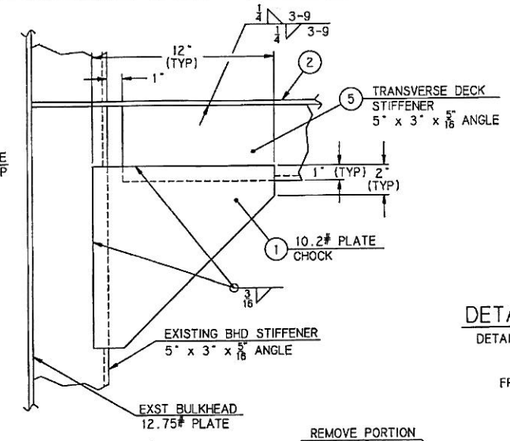

SECTION 37-C (38-A & 47-A)

SECTION 37-C1 SIMILAR OPP HAND
INSTALLATION DETAIL
TYPICAL CONNECTION BETWEEN
NEW DECK STIFFENERS AND
EXISTING BULKHEAD STIFFENERS
SCALE: 3"= 1'- 0"

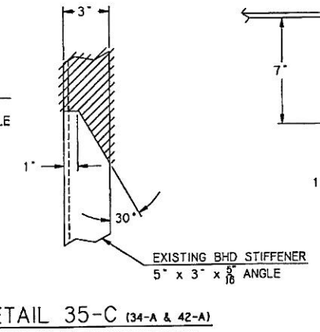

DETAIL 35-C (34-A & 42-A)

DETAIL 35-C1 SIMILAR OPP HAND
REMOVAL DETAIL
BULKHEAD STIFFENER
FRAME 82, LOOKING PORT
SCALE: 3"= 1'- 0"

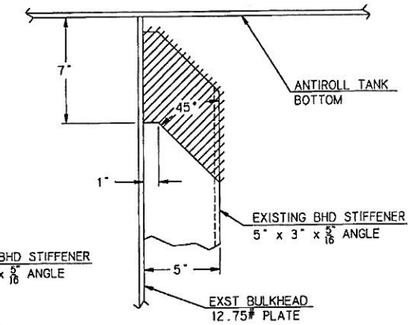

SECTION 34-C (34-A & 42-A)

SECTION 34-C1 SIMILAR OPP HAND
REMOVAL DETAIL
BULKHEAD STIFFENER
FRAME 77, LOOKING FORWARD
SCALE: 3"= 1'- 0"

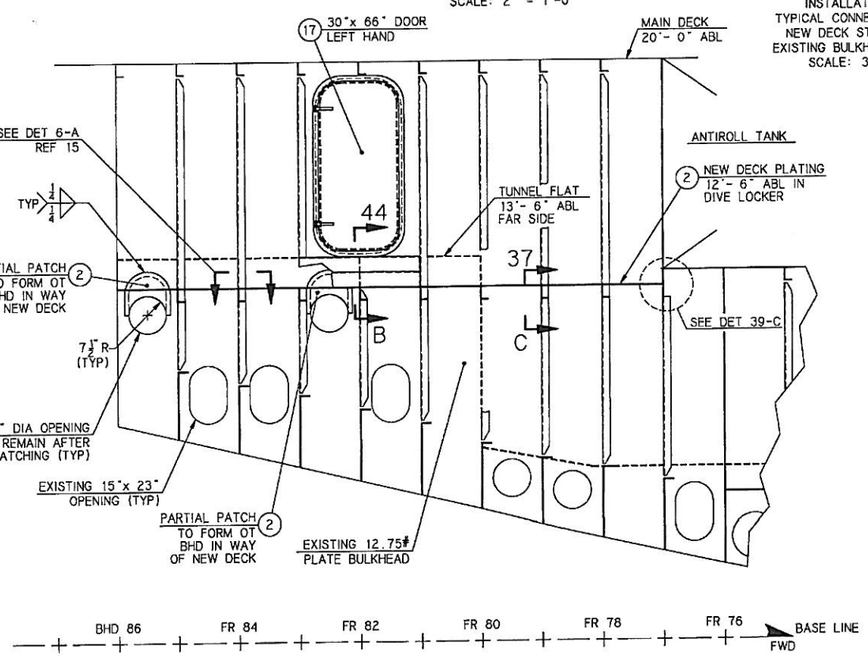

ELEVATION 38-A (18-A)

INSTALLATION
OT, FT & NT LONGITUDINAL BULKHEAD
60" OFF CENTERLINE STARBOARD
STARBOARD SIDE LOOKING PORT
SCALE: 1/2"= 1'- 0"

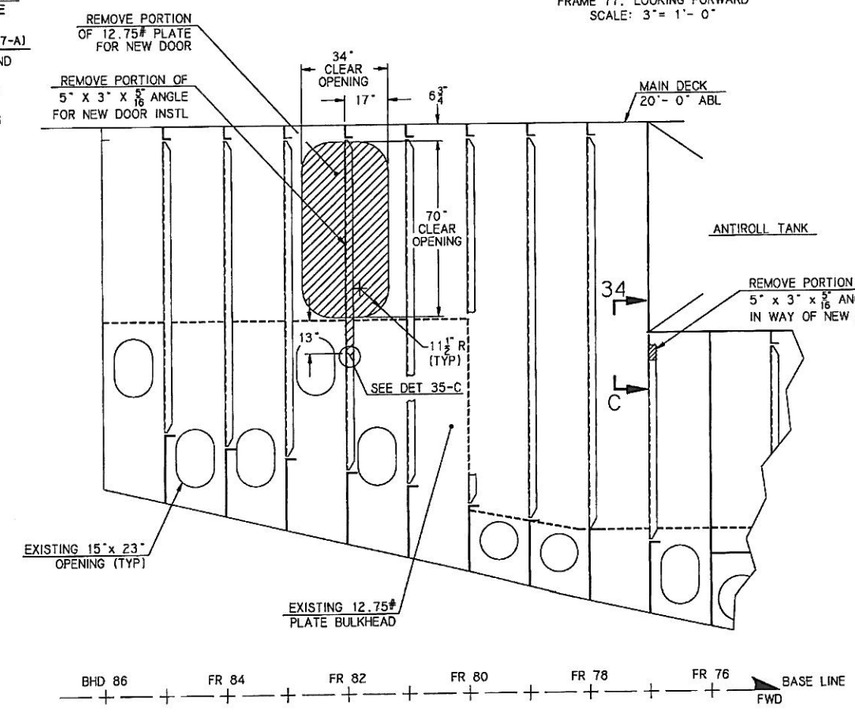

ELEVATION 34-A (2-B)

REMOVALS
OT & NT LONGITUDINAL BULKHEAD
60" OFF CENTERLINE STARBOARD
STARBOARD SIDE LOOKING PORT
SCALE: 1/2"= 1'- 0"

SIZE	NOAA CAGE NO	NOAA DRAWING NUMBER	REV
D	0YLJ5	TITA-132-01	A
SCALE: AS SHOWN		SHEET 5 OF 12	

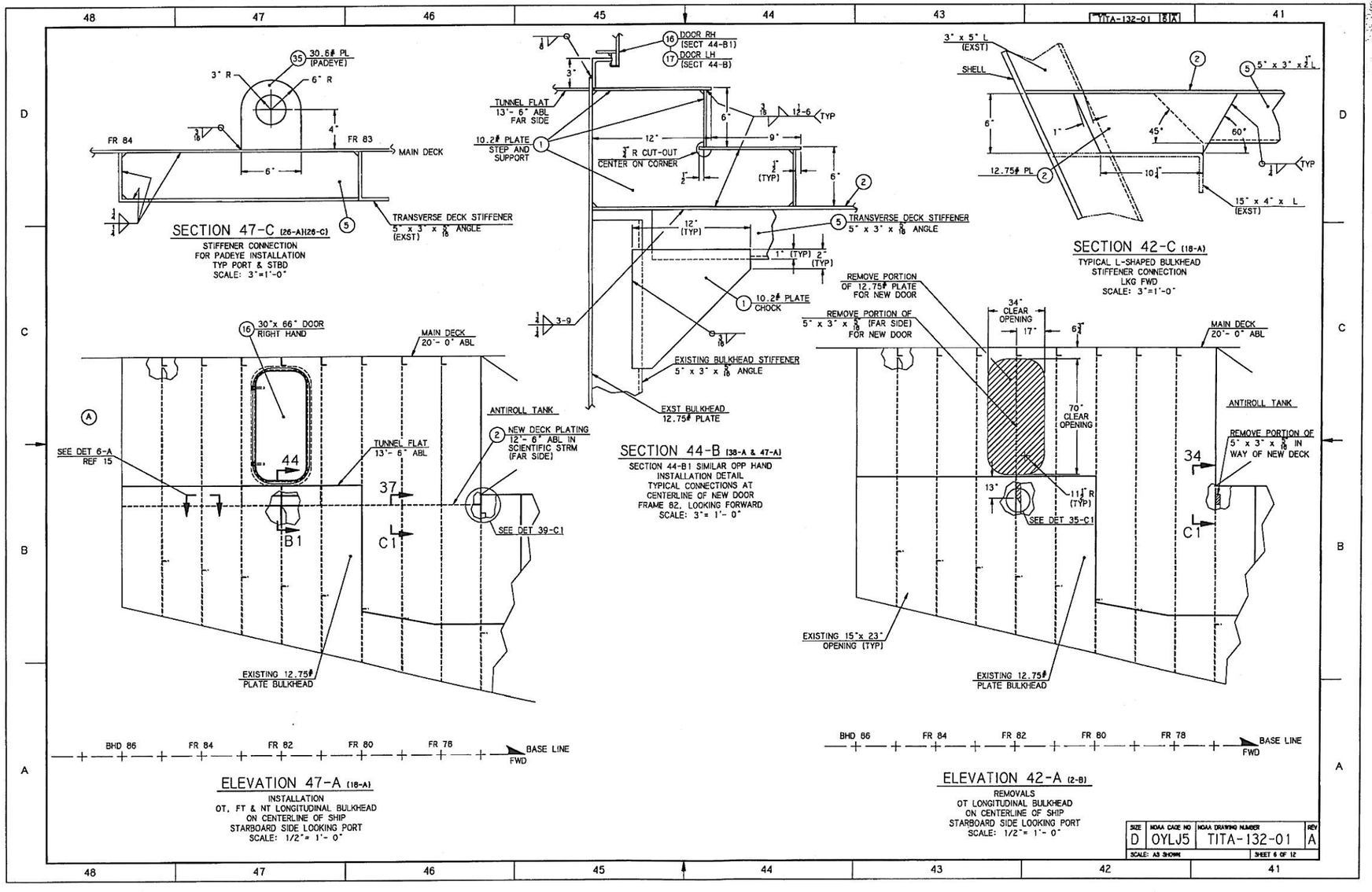
TITA-132-01 [6/A]
SECTION 47-C (26-A)(26-C)
STIFFENER CONNECTION
FOR PADEYE INSTALLATION
TYP PORT & STBD
SCALE: 3"=1'-0"
30.6# PL (PADEYE)
3" R
6" R
FR 84
FR 83
MAIN DECK
TRANSVERSE DECK STIFFENER
5" x 3" x 5/16 ANGLE (EXST)
DOOR RH (SECT 44-B1)
DOOR LH (SECT 44-B)
TUNNEL FLAT 13'- 6" ABL FAR SIDE
10.2# PLATE STEP AND SUPPORT
3/4" R CUT-OUT CENTER ON CORNER
TRANSVERSE DECK STIFFENER
5" x 3" x 5/16 ANGLE
10.2# PLATE CHOCK
EXISTING BULKHEAD STIFFENER
5" x 3" x 5/16 ANGLE
EXST BULKHEAD 12.75# PLATE
SECTION 44-B (38-A & 47-A)
SECTION 44-B1 SIMILAR OPP HAND
INSTALLATION DETAIL
TYPICAL CONNECTIONS AT
CENTERLINE OF NEW DOOR
FRAME 82, LOOKING FORWARD
SCALE: 3"= 1'- 0"
SECTION 42-C (18-A)
TYPICAL L-SHAPED BULKHEAD
STIFFENER CONNECTION
LKG FWD
SCALE: 3"=1'-0"
3" x 5" L (EXST)
SHELL
5" x 3" x 3/4" L
12.75# PL
15" x 4" x L (EXST)
30"x 66" DOOR RIGHT HAND
MAIN DECK 20'- 0" ABL
ANTIROLL TANK
NEW DECK PLATING 12'- 6" ABL IN SCIENTIFIC STRM (FAR SIDE)
SEE DET 6-A REF 15
TUNNEL FLAT 13'- 6" ABL
SEE DET 39-C1
EXISTING 12.75# PLATE BULKHEAD
BHD 86
FR 84
FR 82
FR 80
FR 78
BASE LINE
FWD
ELEVATION 47-A (18-A)
INSTALLATION
OT, FT & NT LONGITUDINAL BULKHEAD
ON CENTERLINE OF SHIP
STARBOARD SIDE LOOKING PORT
SCALE: 1/2"= 1'- 0"
REMOVE PORTION OF 12.75# PLATE FOR NEW DOOR
REMOVE PORTION OF 5" x 3" x 5/16 (FAR SIDE) FOR NEW DOOR
34" CLEAR OPENING
70" CLEAR OPENING
SEE DET 35-C1
REMOVE PORTION OF 5" x 3" x 5/16 IN WAY OF NEW DECK
EXISTING 15"x 23" OPENING (TYP)
EXISTING 12.75# PLATE BULKHEAD
ELEVATION 42-A (2-B)
REMOVALS
OT LONGITUDINAL BULKHEAD
ON CENTERLINE OF SHIP
STARBOARD SIDE LOOKING PORT
SCALE: 1/2"= 1'- 0"
SIZE D
NOAA CAGE NO OYLJ5
NOAA DRAWING NUMBER TITA-132-01
REV A
SCALE: AS SHOWN
SHEET 6 OF 12

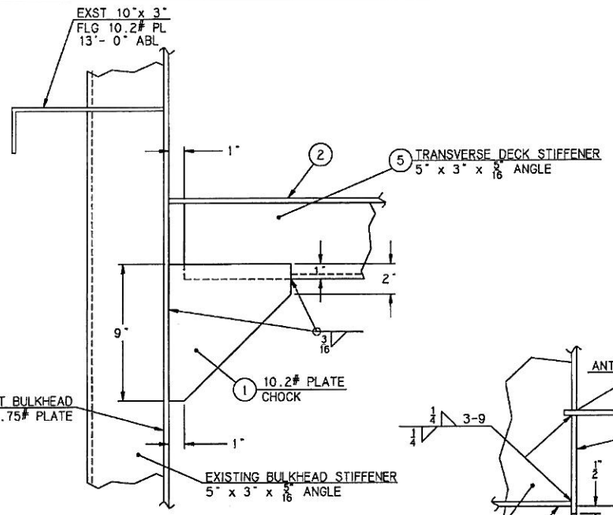

SECTION 56-C (50-A)

INSTALLATION DETAIL
TYPICAL CONNECTIONS AT
FRAMES 78 AND 79 LOOKING FORWARD
SCALE: 3"= 1'- 0"

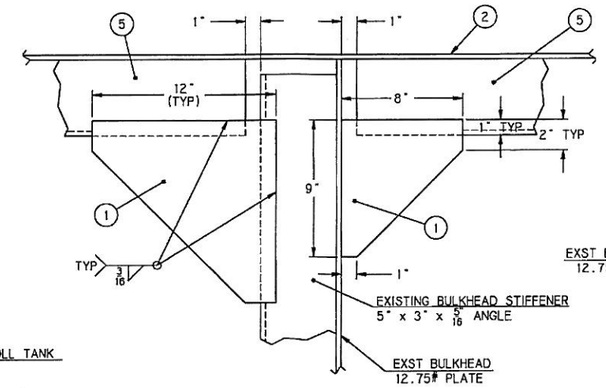

SECTION 52-C (50-A)

INSTALLATION DETAIL
TYPICAL CONNECTIONS AT
FRAMES 81, 83 AND 85 LOOKING FORWARD
SCALE: 3"= 1'- 0"

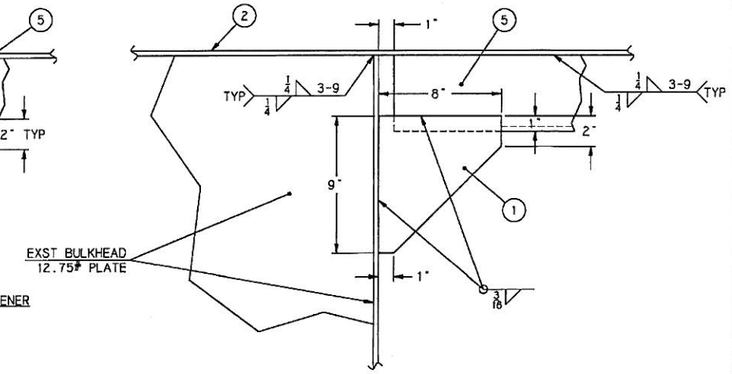

SECTION 50-C (50-A)

INSTALLATION DETAIL
TYPICAL CONNECTIONS AT
FRAMES 82 AND 84 LOOKING FORWARD
SCALE: 3"= 1'- 0"

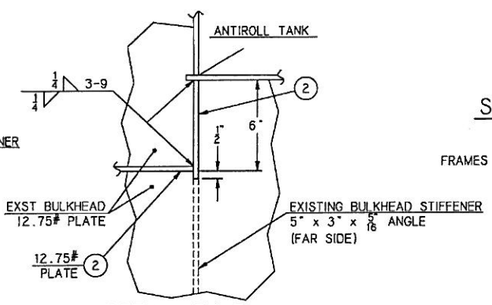

DETAIL 54-B (50-A)

INSTALLATION DETAIL
DECK END BELOW ANTIROLL TANK
AT LONGITUDINAL BULKHEAD
FRAME 77, LOOKING PORT
SCALE: 3"= 1'- 0"

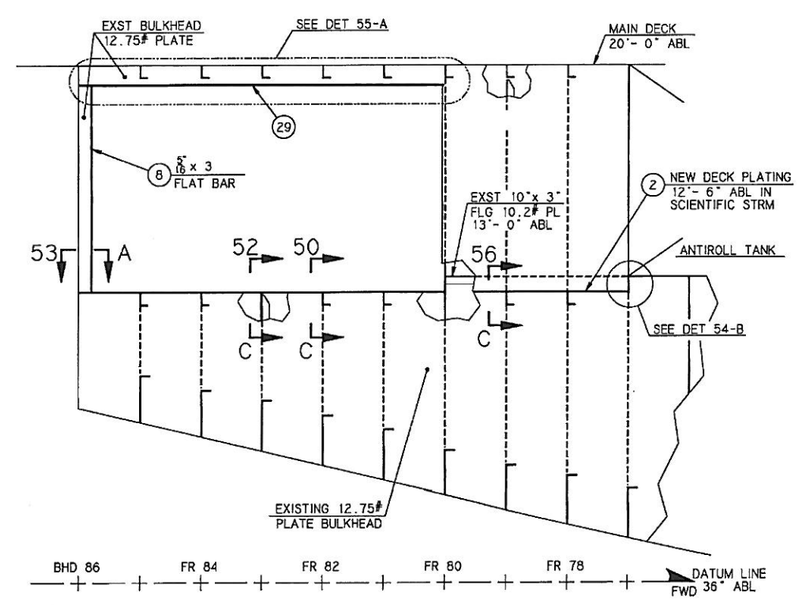

ELEVATION 50-A (18-A)

INSTALLATION
OT LONGITUDINAL BULKHEAD
10'- 3 5/8" OFF CENTERLINE OF SHIP
PORT SIDE LOOKING OUTBOARD
SCALE: 1/2"= 1'- 0"

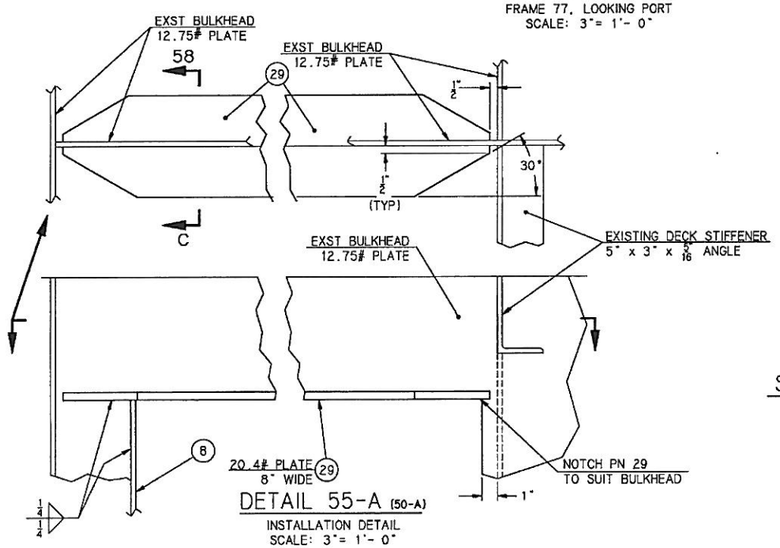

DETAIL 55-A (50-A)

INSTALLATION DETAIL
SCALE: 3"= 1'- 0"

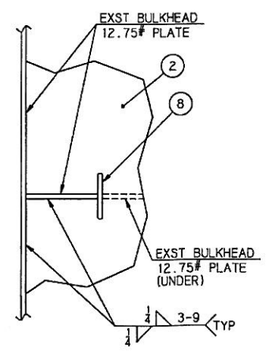

SECTION 53-A (50-A)

INSTALLATION DETAIL
SCALE: 3"= 1'- 0"

SIZE	NOAA CAGE NO	NOAA DRAWING NUMBER	REV
D	OYLJ5	TITA-132-01	A
SCALE: AS SHOWN		SHEET 7 OF 12	

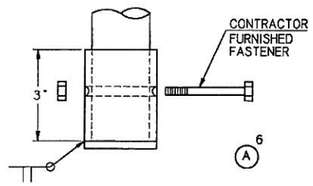

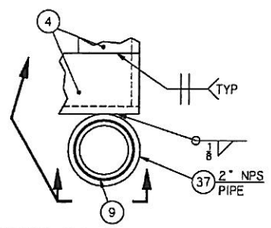

SECT 64-C (60-C & 62-C))
INSTALLATION DETAIL
HANDRAIL SUPPORT
SCALE: 6"= 1'- 0"

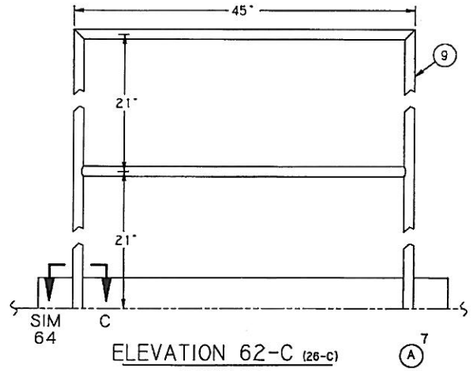

ELEVATION 62-C (26-C)
LOOKING INBD
IN FRONT OF INCLINED LADDER
SCALE: 1 1/2"= 1'- 0"

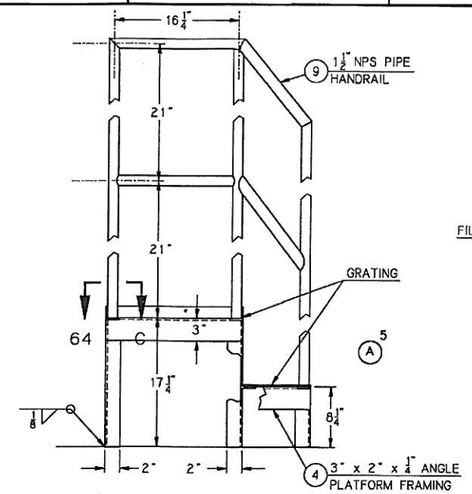

SECTION 60-C (31-C)
INSTALLATION DETAIL
SCALE: 1 1/2"= 1'- 0"

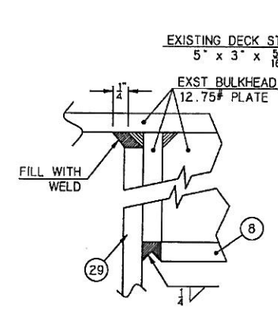

DETAIL 59-C (58-C)
SCALE: FULL

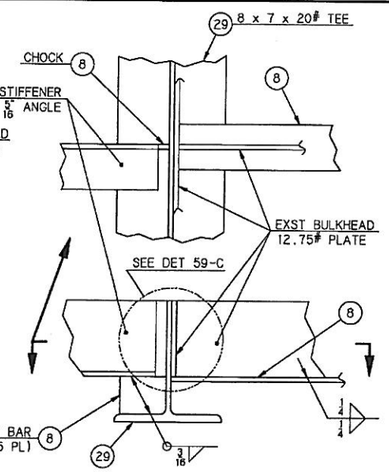

DETAIL 58-C (58-A & 62-A)
INSTALLATION DETAIL
SCALE: 3"= 1'- 0"

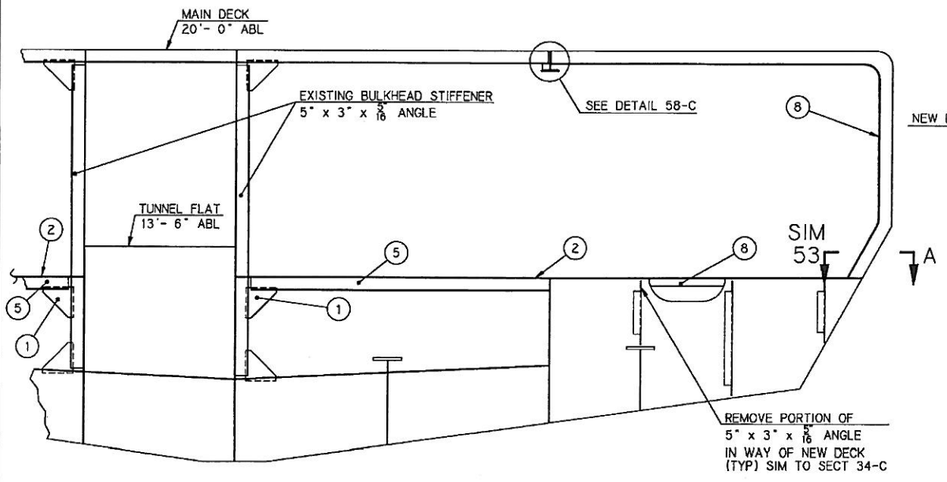

ELEVATION 62-A (18-A)
BULKHEAD MODIFICATIONS
FRAME 84, PORT SIDE, LOOKING AFT
SCALE: 1/2"= 1'- 0"

BASELINE
OF SHIP

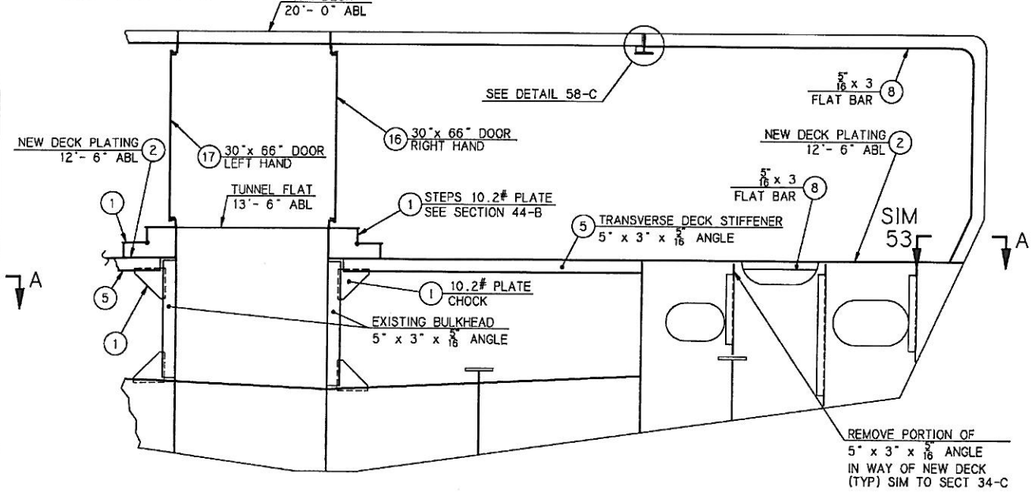

ELEVATION 58-A (18-A)
BULKHEAD MODS
FRAME 82, PORT SIDE, LOOKING AFT
SCALE: 1/2"= 1'- 0"

BASELINE
OF SHIP

SIZE	NOAA CAGE NO	NOAA DRAWING NUMBER	REV
D	0YLJ5	TITA-132-01	A
SCALE: AS SHOWN		SHEET 8 OF 12	

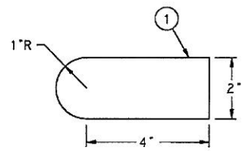

DETAIL 71-C (71-B)
10.2# PLATE SUPPORT CLIP
SCALE: 6" = 1'-0"

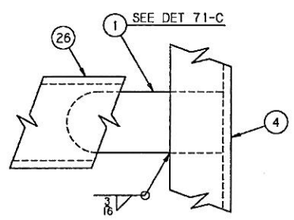

DETAIL 71-B (68-A)
SCALE: 6" = 1'-0"

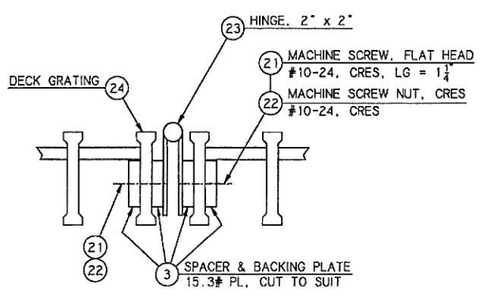

SECTION 71-A (68-A)
HINGED GRATING SECTIONS
TYPICAL INSTALLATION
SCALE: FULL

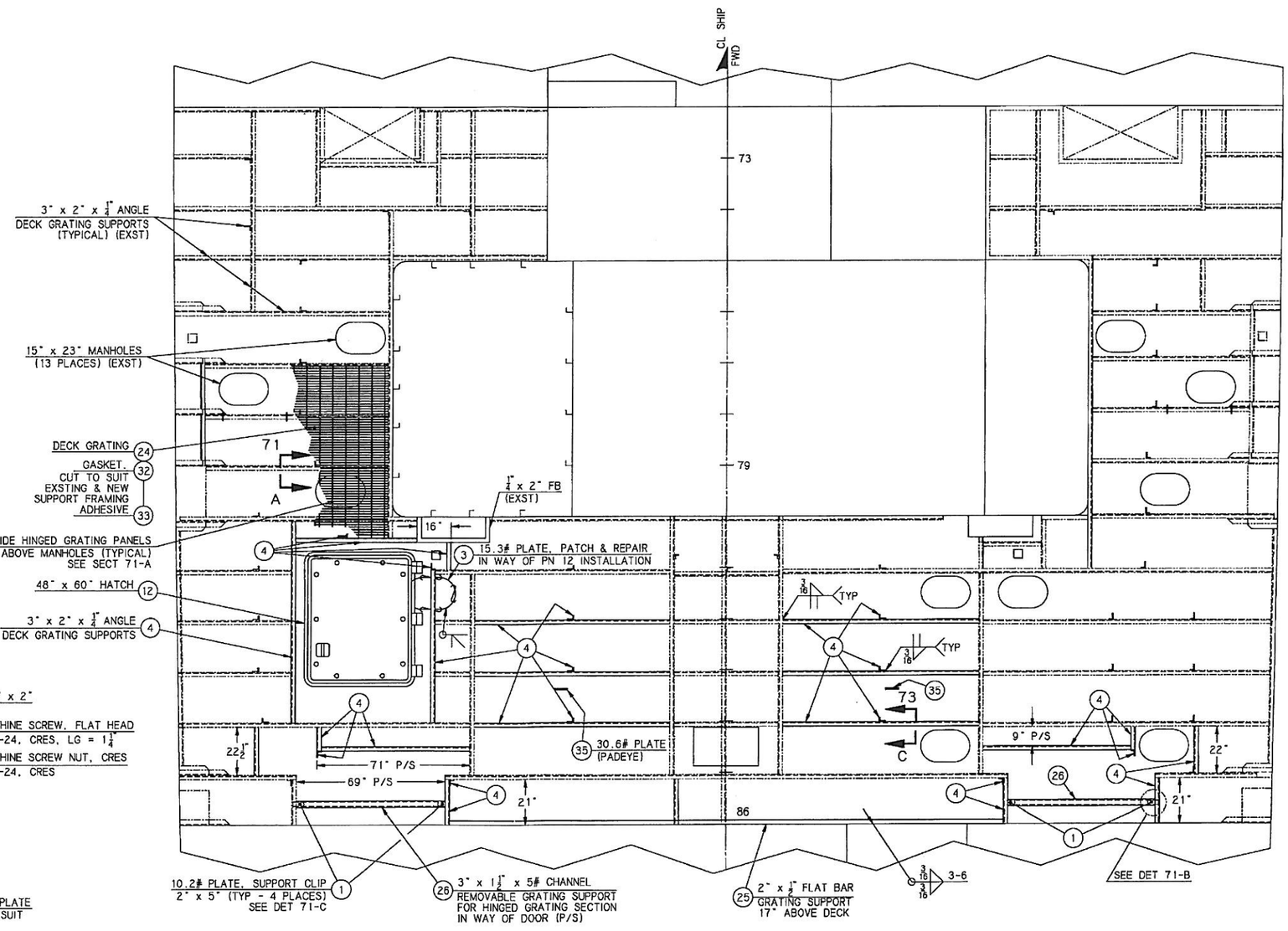

PLAN 68-A (4-A)
DECK GRATING SUPPORTS
MAIN DECK, FR 72-86
SCALE: 1/2" = 1'- 0"

SIZE	NOAA CAGE NO	NOAA DRAWING NUMBER	REV
D	0YLJ5	TITA-132-01	A
SCALE: AS SHOWN		SHEET 9 OF 12	

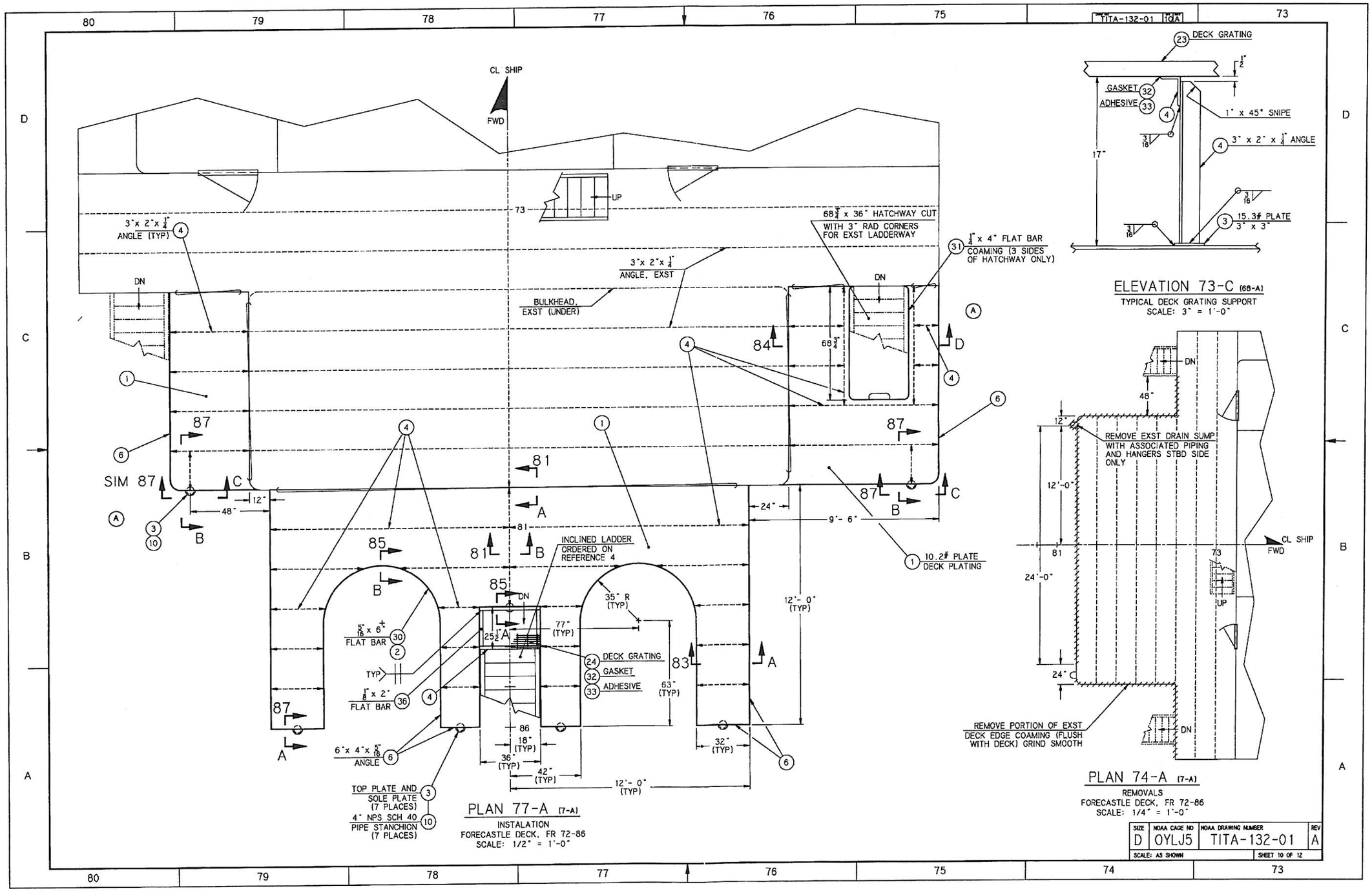
TITA-132-01 A
CL SHIP
FWD
UP
DN
3"x 2"x 1/4" ANGLE (TYP)
3"x 2"x 1/4" ANGLE, EXST
BULKHEAD, EXST (UNDER)
68 3/4" x 36" HATCHWAY CUT WITH 3" RAD CORNERS FOR EXST LADDERWAY
1/4" x 4" FLAT BAR COAMING (3 SIDES OF HATCHWAY ONLY)
SIM 87
INCLINED LADDER ORDERED ON REFERENCE 4
10.2# PLATE DECK PLATING
5/16" x 6" FLAT BAR
1/8" x 2" FLAT BAR
6"x 4"x 5/16" ANGLE
TOP PLATE AND SOLE PLATE (7 PLACES)
4" NPS SCH 40 PIPE STANCHION (7 PLACES)
DECK GRATING
GASKET
ADHESIVE
35" R (TYP)
77" (TYP)
63" (TYP)
12'- 0" (TYP)
9'- 6"
PLAN 77-A (7-A)
INSTALATION
FORECASTLE DECK, FR 72-86
SCALE: 1/2" = 1'-0"
DECK GRATING
1" x 45° SNIPE
3" x 2" x 1/4" ANGLE
15.3# PLATE 3" x 3"
ELEVATION 73-C (68-A)
TYPICAL DECK GRATING SUPPORT
SCALE: 3" = 1'-0"
REMOVE EXST DRAIN SUMP WITH ASSOCIATED PIPING AND HANGERS STBD SIDE ONLY
REMOVE PORTION OF EXST DECK EDGE COAMING (FLUSH WITH DECK) GRIND SMOOTH
PLAN 74-A (7-A)
REMOVALS
FORECASTLE DECK, FR 72-86
SCALE: 1/4" = 1'-0"
SIZE D
NOAA CAGE NO OYLJ5
NOAA DRAWING NUMBER TITA-132-01
REV A
SCALE: AS SHOWN
SHEET 10 OF 12

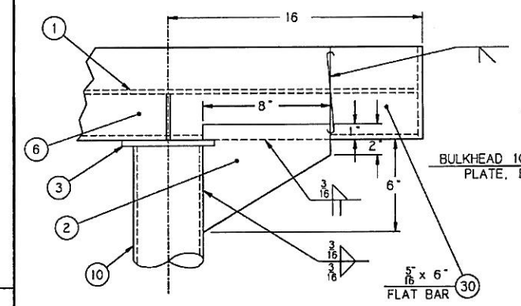

ELEVATION 87-C (77-A)

INSTALLATION
PORT & STARBOARD SIDE CORNER SUPPORT
LOOKING FORWARD AT FRAME 80
PORT SIDE SIM TO OPP HAND
FOR INFORMATION NOT SHOWN
SEE SECTION 87-A
SCALE: 3"= 1'- 0"

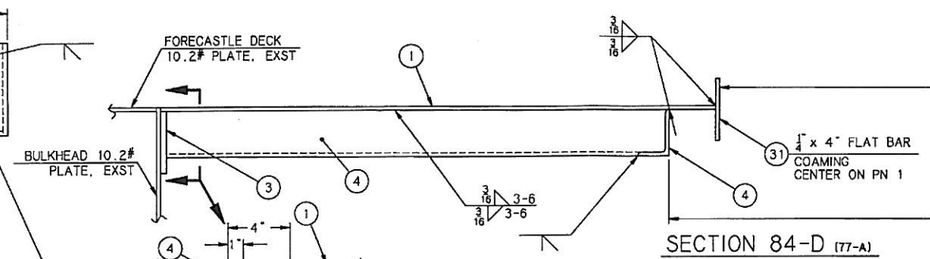

SECTION 84-D (77-A)

INSTALLATION DETAILS
TYPICAL CONNECTIONS AT HATCHWAY
CUT AND EXISTING STARBOARD
BULKHEAD AT FRAMES 76 AND 77
SCALE: 3"= 1'- 0"

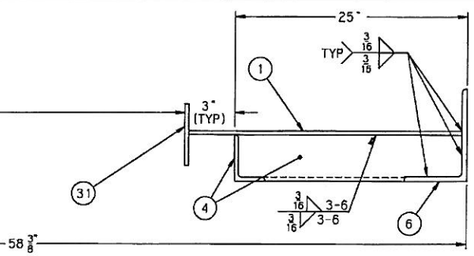

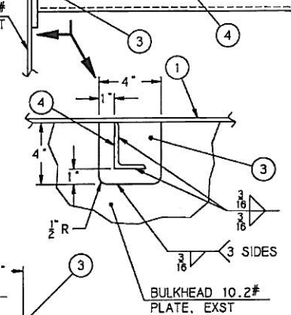

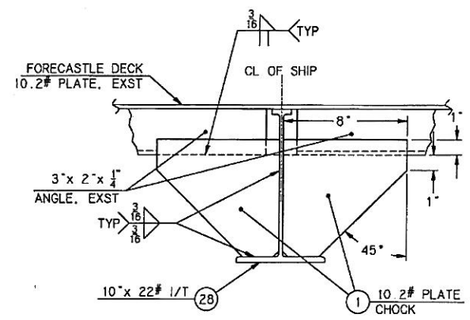

SECTION 81-B (77-A)

INSTALLATION
TYPICAL CONNECTIONS AT
FRAMES 81 AND 82 LOOKING FORWARD
SCALE: 3"= 1'- 0"

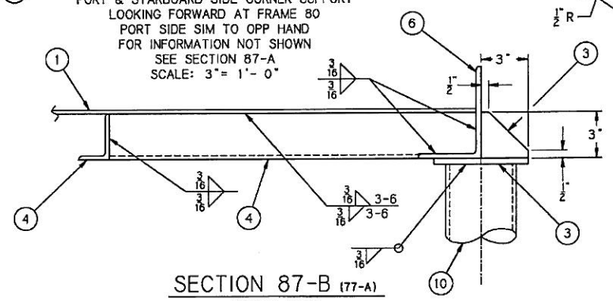

SECTION 87-B (77-A)

INSTALLATION
PORT & STARBOARD SIDE CORNER SUPPORT
LOOKING STARBOARD AT FRAME 80
FOR INFORMATION NOT SHOWN
SEE SECTION 87-A
SCALE: 3"= 1'- 0"

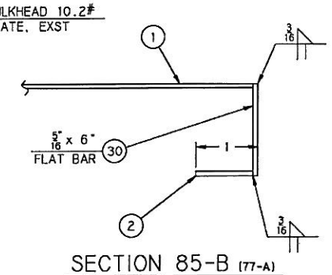

SECTION 85-B (77-A)

INSTALLATION
FORMED 6"x 4" ANGLE FOR
35" RADIUS OPENING (2 PLACES)
SCALE: 3"= 1'- 0"

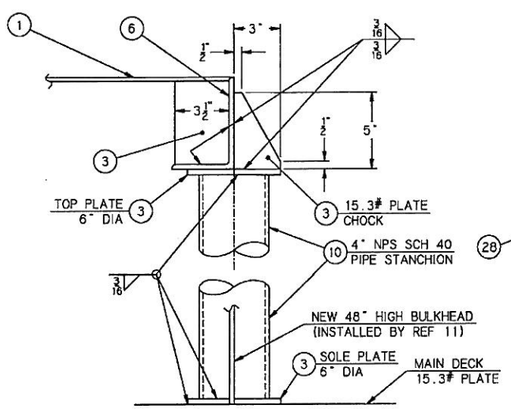

SECTION 87-A (77-A)

INSTALLATION
TYPICAL STANCHION SUPPORT
AT FORCASTLE DECK EDGE
LOOKING STARBOARD
SCALE: 3"= 1'- 0"

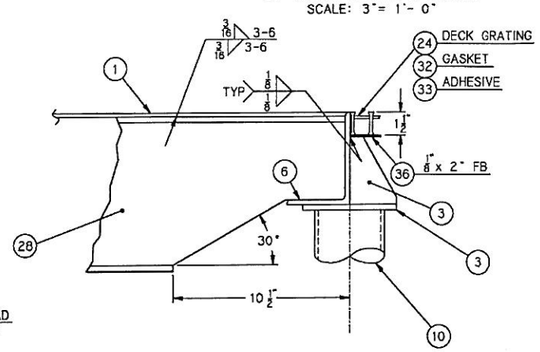

SECTION 85-A (77-A)

INSTALLATION
CONNECTION OF NEW
CENTERLINE I/T AT FRAME 83
FOR INFORMATION NOT SHOWN
SEE SECTION 87-A
SCALE: 3"= 1'- 0"

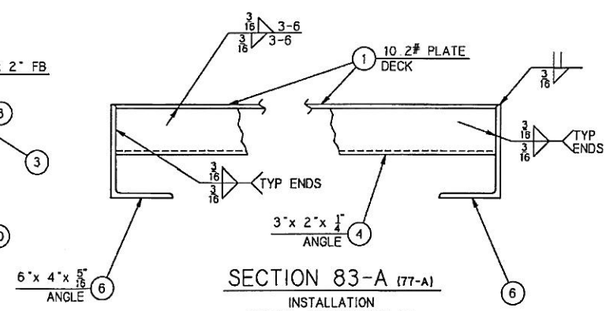

SECTION 83-A (77-A)

INSTALLATION
TYPICAL CONNECTIONS AT
FRAMES UNDER NEW FORCASTLE DECK
SCALE: 3"= 1'- 0"

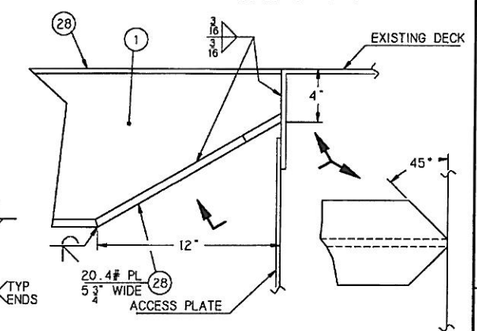

SECTION 81-A (77-A)

INSTALLATION
CONNECTION TO SHOW
REMOVAL OF ACCESS PLATE
SCALE: 3"=1'-0"

SIZE	NOAA CAGE NO	NOAA DRAWING NUMBER	REV
D	0YLJ5	TITA-132-01	A
SCALE: AS SHOWN		SHEET 11 OF 12	

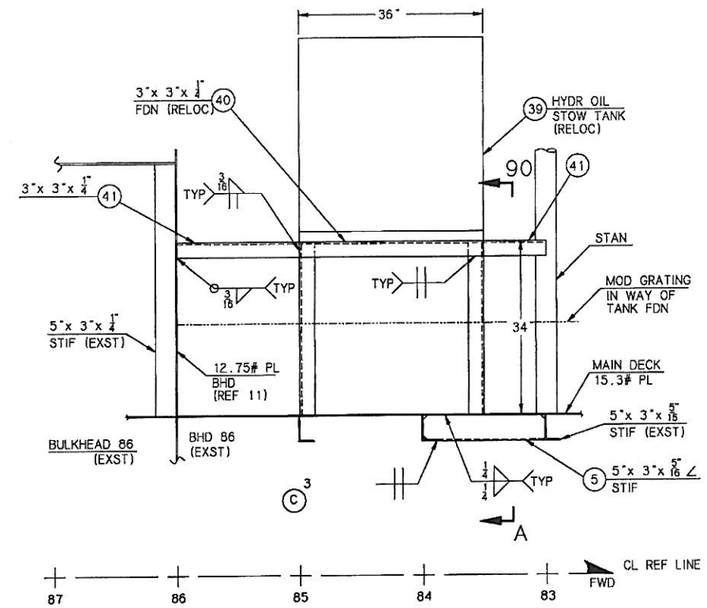

ELEVATION 90-B (92-A)

INSTALLATION DETAILS
HYDRAULIC OIL STOWAGE
TANK (PORT SIDE SIM
OPP HAND)
SCALE: 1" = 1'-0"

B 1

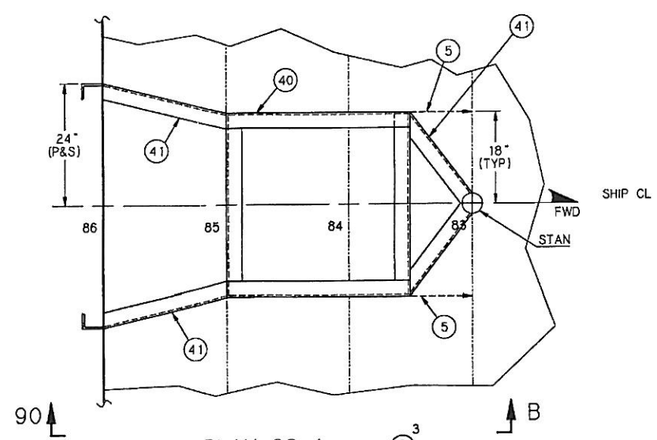

PLAN 92-A (26-C) C 3

INSTALLATION DETAILS
HYDRAULIC OIL STOWAGE TANK
SCALE: 1" = 1'-0"

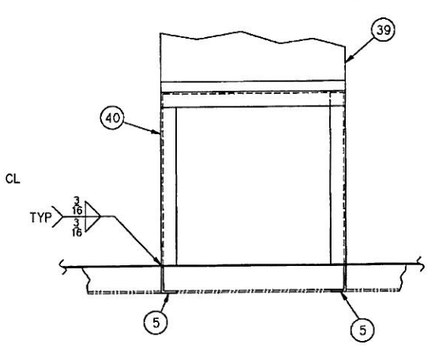

ELEVATION 90-A (90-B) C 3

INSTALLATION DETAILS
HYDRAULIC OIL STOWAGE TANK
SCALE: 1" = 1'-0"

SIZE	NOAA CAGE NO	NOAA DRAWING NUMBER	REV
D	0YLJ5	TITA-132-01	C
SCALE: AS SHOWN		SHEET 12 OF 12	