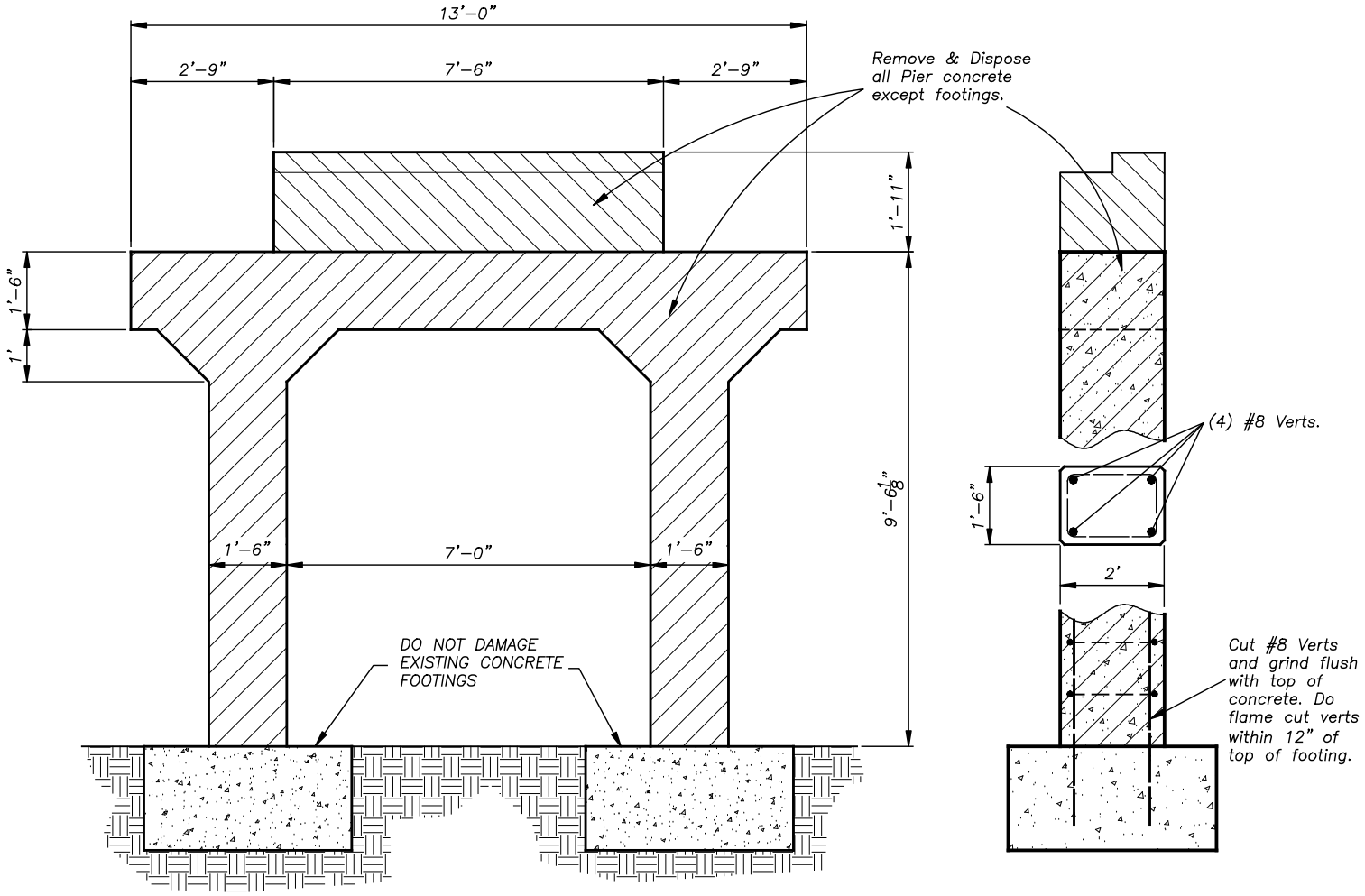

EXISTING CONCRETE PIER

Not to Scale

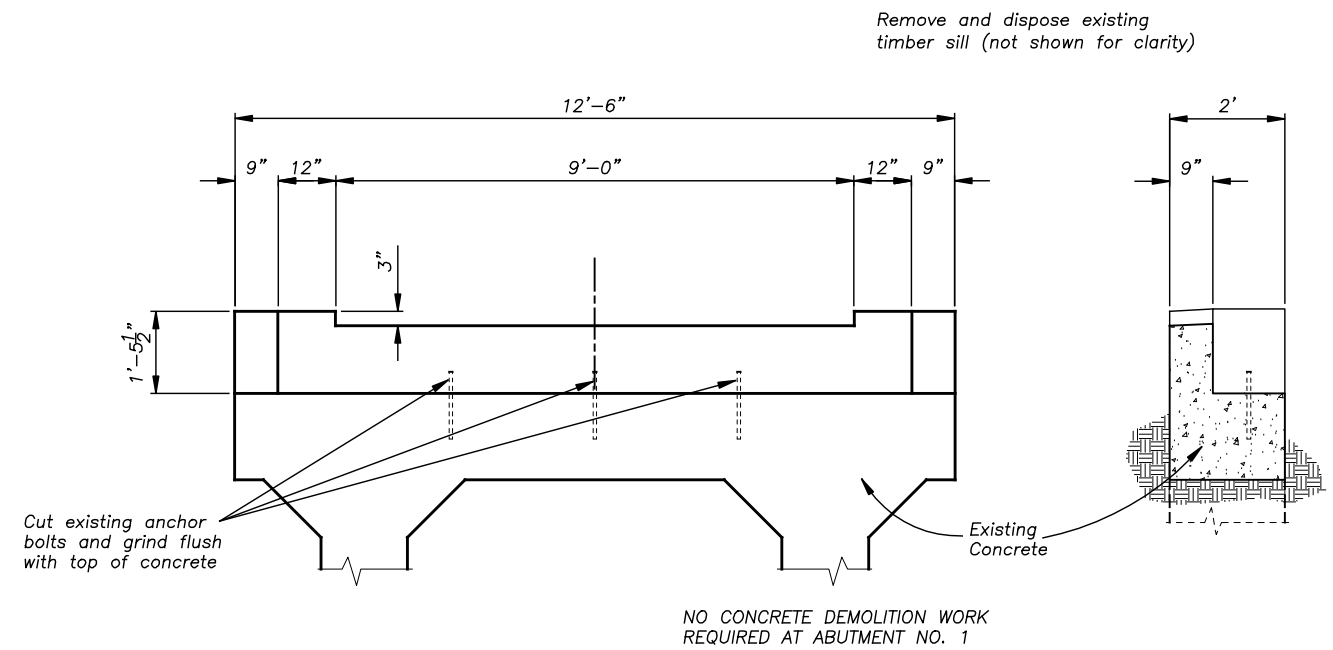

ABUTMENT NO. 1

Not to Scale

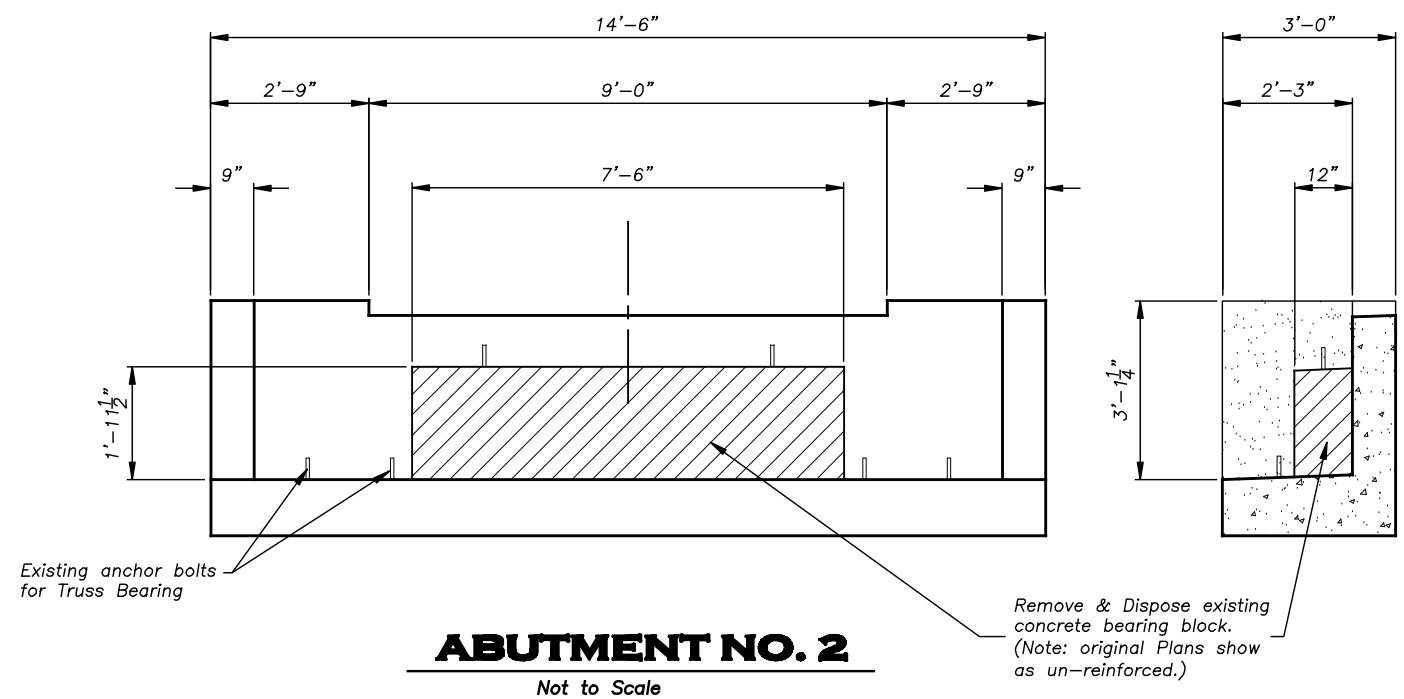

ABUTMENT NO. 2

Not to Scale

BY	DATE	REVISION DESCRIPTION

DESIGN	CT	PROJ. NO.	5282
DRAWN	CT	DATE	MAY 07
CHECKED	MJ	SURVEYED	DJ&A

DJ&A, P.C.
CONSULTING ENGINEERS AND SURVEYORS
[illegible]
Phone [illegible] Fax [illegible]

USFS - CLEARWATER N.F.
COLT CREEK CABIN TRAIL
BRIDGE REPLACEMENT

EXISTING BRIDGE DEMOLITION DETAILS

SHEET 5 OF 14