REG	STATE	PROJECT	SHEET NO.	TOTAL SHEETS
SE	VI	NH-66(008)	A1	193

THE GOVERNMENT OF THE VIRGIN ISLANDS OF THE UNITED STATES

PLANS FOR PROPOSED

PROJECT VI NH-66(008)

GRADING AND DRAINAGE FOR THE
CHRISTIANSTED BYPASS
PHASE IA - CONTRACT 2
FROM QUEEN CROSS STREET
TO HOSPITAL STREET

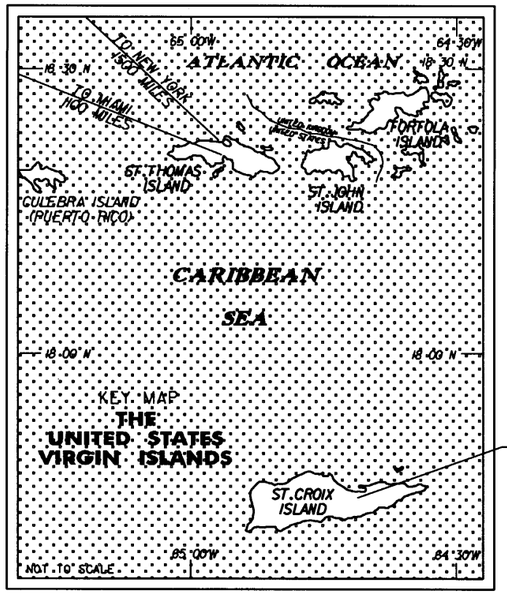

PROJECT VI NH-66(008)
PHASE 1A - CONTRACT 2

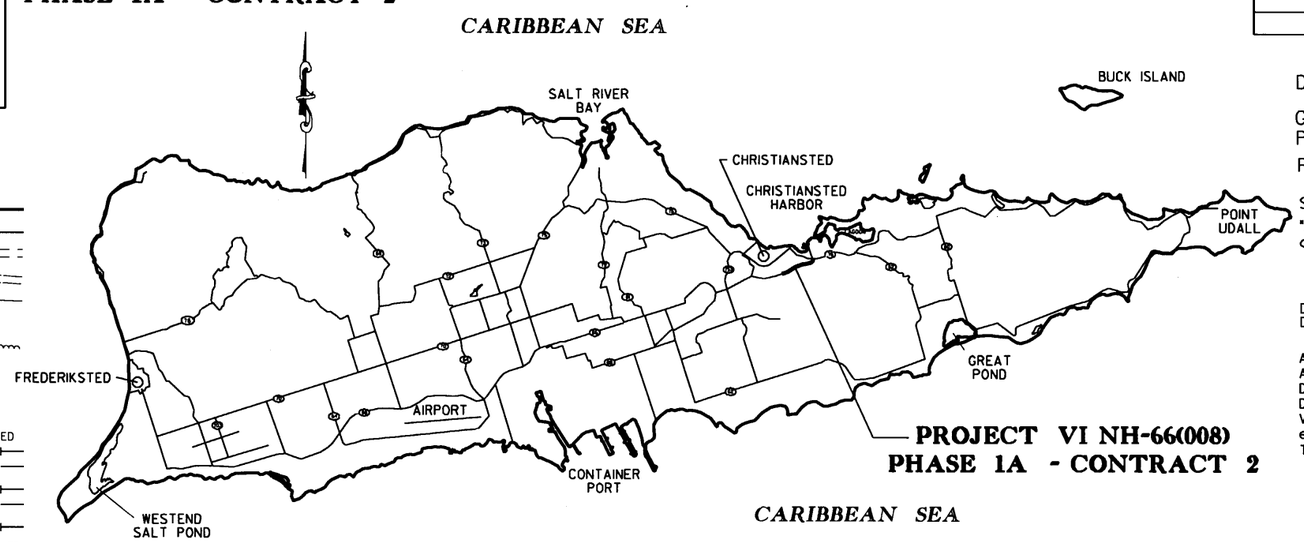

ST. CROIX ISLAND

NOT TO SCALE

INDEX TO SHEETS

SHEET NO	DESCRIPTION
A1	TITLE SHEET
B1	LOCATION MAP
B2	CENTERLINE REFERENCES
C1-C5	TYPICAL SECTIONS
D1-D4	TABULATION OF QUANTITIES
E1-E9	SCHEDULES AND SUMMARIES
F1-F7	PLAN AND PROFILES
G1-G16	UTILITY RELOCATION PLANS
H1-H5	EROSION CONTROL NARRATIVE AND PLANS
J1-J3	ROW PLANS
K1-K6	TRAFFIC CONTROL PLANS
L1-L8	DRAINAGE CROSS SECTIONS
M1-M83	STANDARDS AND DETAILS
N1-N44	DESIGN CROSS SECTIONS

DESCRIPTION OF PROJECT :

Grading, Drainage, Anchor Block, Ground Anchors Paving, Erosion Control and other work.

PROJECT LENGTH 0.97 MILES

SPECIFICATIONS:

"Standard Specifications for Construction of Roads and Bridges on Federal Highway Projects", FP-96.

DESIGN DESIGNATION	CHRISTIANSTED BY-PASS
ADT(2007) _	0
ADT(2027) _	20,000
DHV _ _ _ _	1,500
D _ _ _ _ .	50/50
V(MPH)_ _ _	40
e _ _ _ _ .	6%
T _ _ _ _ .	10%

LEGEND

PROJECTED CENTERLINE
STAKED CENTERLINE
EXISTING ROADWAY
RIVERS
CREEKS AND INTERMITTENT DRAINAGE
MARSH OR SWAMP
TREELINE
TREES
SOIL BORINGS — B-5
TELEPHONE JUNCTION BOX — TJB

		EXISTING	PROPOSED
TELEPHONE LINE	UNDERGROUND	T	T
	ON POLES	T	T
POWER LINE	UNDERGROUND	P	P
	ON POLES	P	P
PIPE LINE (GAS/WATER/OIL/SEWER)		W	W
PIPE CULVERT WITH INLET			
SINGLE OR MULTIPLE PIPE CULVERT WITH HEADWALL AND WINGWALL			
SINGLE OR MULTIPLE PIPE CULVERT WITH END SECTION			
PIPE CULVERT IN PROFILE			
SINGLE OR MULTIPLE BOX CULVERT WITH HEADWALL AND WINGWALL			
FENCE WITH GATE			
GUARDRAIL			
RETAINING WALL			
CONSTRUCTION LIMITS	TOP OF CUT		
	TOE OF FILL		
	TRANSITION		

PROJECT MANAGER	LEAD DESIGNERS
A. PATEL	S. BEALE

PLANS PREPARED BY

U.S.DEPARTMENT OF TRANSPORTATION
FEDERAL HIGHWAY ADMINISTRATION
EASTERN FEDERAL LANDS HIGHWAY DIVISION
STERLING, VIRGINIA
MARCH 2007

3/9/2007 8:53:25 AM M:\Projects\vi\st_croix\nh66(008)\proj_dev\Contract 2\title.dgn

REG	STATE	PROJECT	SHEET NO.	TOTAL SHEETS
SE	VI	NH-66(008)	B1	193

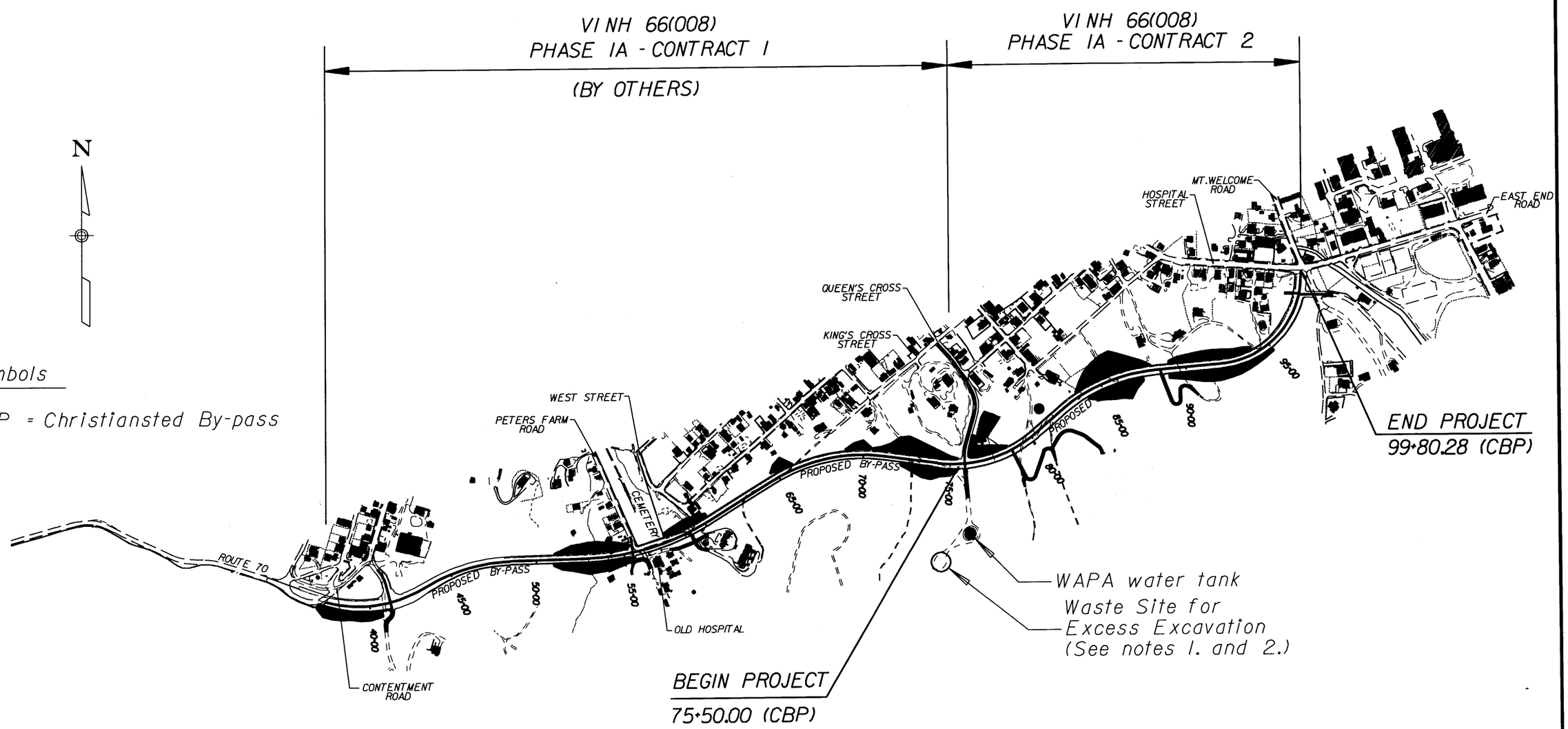

Symbols

CBP = Christiansted By-pass

Notes:

1. Silt Fence (Wire Backed) to be constructed at the waste site for excess excavation will be upgraded as required and remain in place at the end of the project. The fence will become the property of the Virgin Islands Water and Power Authority. See the Special Contract Requirements.

2. Access to the waste site will be via Line 11 (existing road to WAPA water tank). Grade water tank access road where required for adequate waste site haul road, as directed by the CO. Install chain link fence and gate around existing water tank to allow WAPA personnel access to the tank. Maintain access to water tank at all times.

CHRISTIANSTED BY-PASS
LOCATION MAP

0 300 600
SCALE IN FEET

10/13/2006 1:32:04 PM M:\Projects\vits\st_croix\nh66(008)\proj_dev\Contract 2\location.dgn

REG	STATE	PROJECT	SHEET NO.	TOTAL SHEETS
SE	VI	NH-66(008)	B2	193

CONSTRUCTION BASELINE ALIGNMENTS WERE STAKED SEPTEMBER 8, 2006.
STAKING DATA WILL BE FURNISHED PRIOR TO CONSTRUCTION.

U.S. DEPARTMENT OF TRANSPORTATION
FEDERAL HIGHWAY ADMINISTRATION
EASTERN FEDERAL LANDS HIGHWAY DIVISION
STERLING, VIRGINIA

CENTERLINE REFERENCES
AND
CONTROL POINT REFERENCES
FOR
CHRISTIANSTED BYPASS
CHRISTIANSTED, U.S.V.I.

10/11/2006 11:09:11 AM M:\Projects\vifs\st_crol\vi66\008\proj_dgn\Contract 2\CLCTLREF.DGN

REG	STATE	PROJECT	SHEET NO.	TOTAL SHEETS
SE	VI	NH-66(008)	C1	193

Notes :

1. FUTURE work shown for information only. Construct proposed profile grade to top of subgrade. Aggregate, asphalt pavement, curb&gutter, sidewalk and guardrail will be constructed under a future contract.
2. Daylight subgrade to tie into proposed side slopes.
3. Place conserved topsoil (2-inch depth) and Seeding, Hydraulic Method on all disturbed earth surfaces unless in areas steeper than 2:1 where ROW Sprigging (Vetiver Planting) is to be applied. ROW Sprigging locations are shown on the Erosion and Sediment Control Plans.

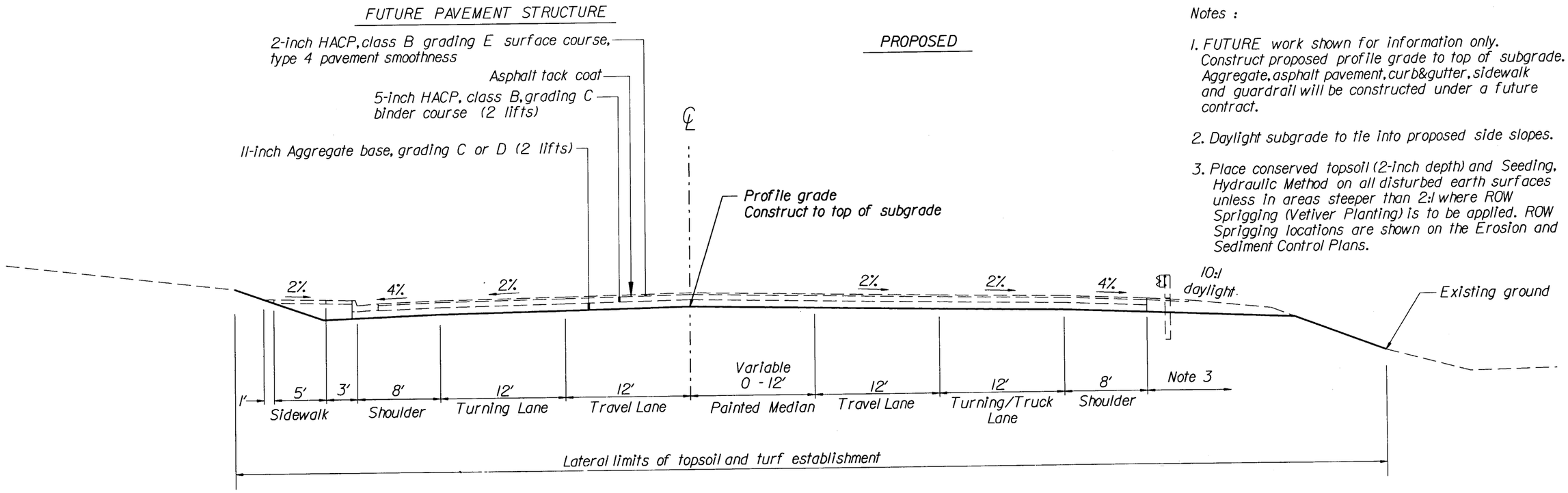

TANGENT SECTION

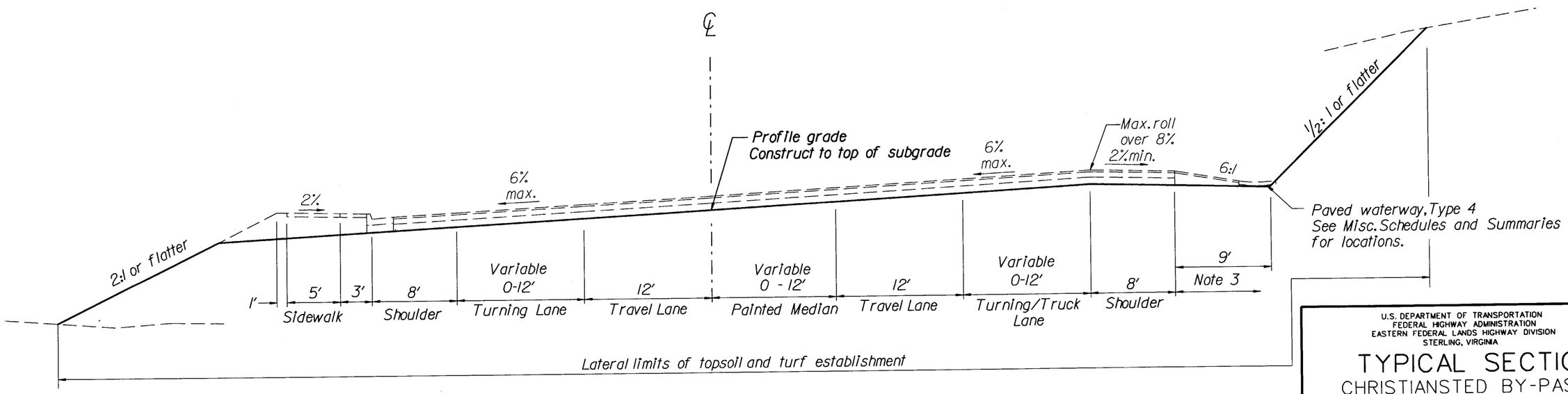

SUPERELEVATED SECTION

U.S. DEPARTMENT OF TRANSPORTATION
FEDERAL HIGHWAY ADMINISTRATION
EASTERN FEDERAL LANDS HIGHWAY DIVISION
STERLING, VIRGINIA

TYPICAL SECTION

CHRISTIANSTED BY-PASS
72+00 TO 75+50
96+00 TO 99+80.28

10/11/2006 11:18:53 AM M:\Projects\wils\st_croix\nh66(008)proj_dev\Contract 2\TYPICALV2.dgn

REG	STATE	PROJECT	SHEET NO.	TOTAL SHEETS
SE	VI	NH-66(008)	C2	193

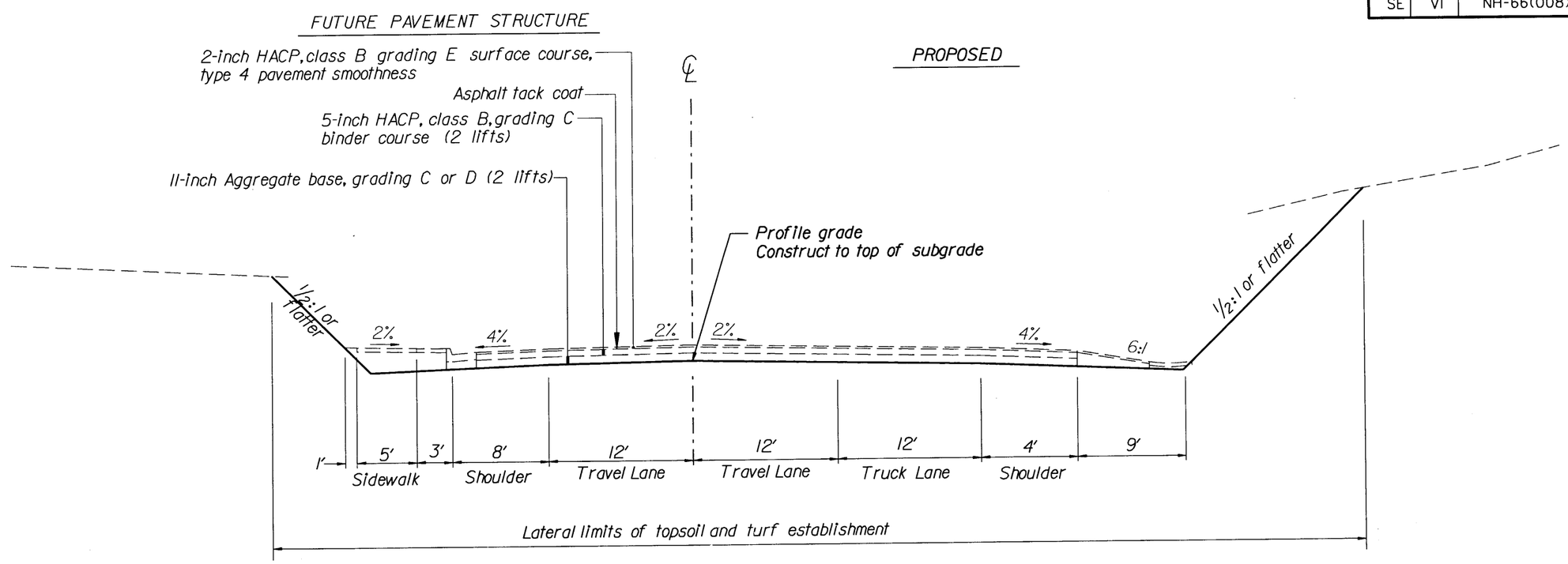

TANGENT SECTION

Notes :

1. FUTURE work shown for information only. Construct proposed profile grade to top of subgrade. Aggregate, asphalt pavement, curb&gutter, sidewalk and guardrail will be constructed under a future contract.

2. Daylight subgrade to tie into proposed side slopes.

3. Place conserved topsoil (2-inch depth) and Seeding, Hydraulic Method on all disturbed earth surfaces unless in areas steeper than 2:1 where ROW Sprigging (Vetiver Planting) is to be applied. ROW Sprigging locations are shown on the Erosion and Sediment Control Plans.

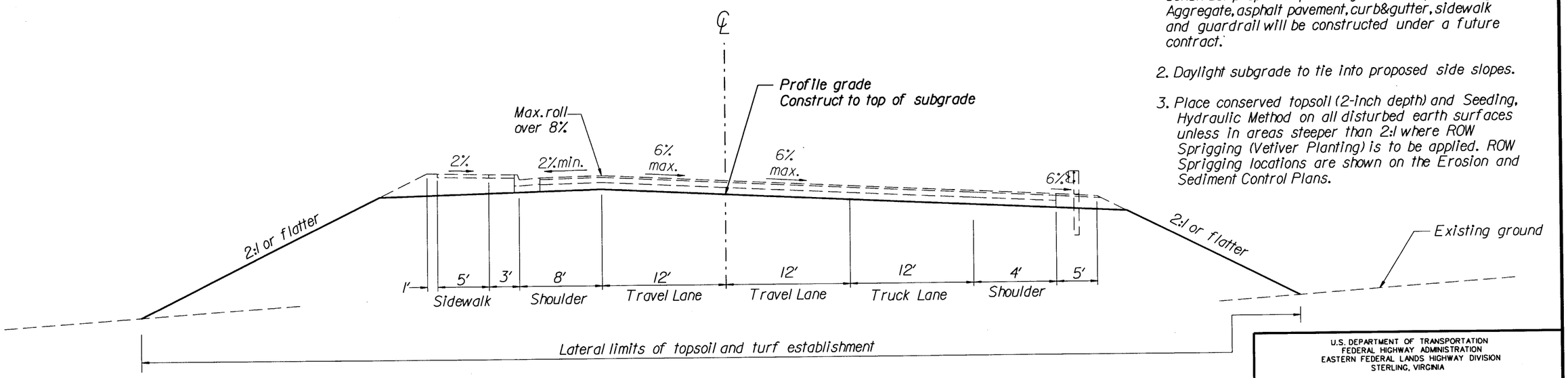

SUPERELEVATED SECTION

U.S. DEPARTMENT OF TRANSPORTATION
FEDERAL HIGHWAY ADMINISTRATION
EASTERN FEDERAL LANDS HIGHWAY DIVISION
STERLING, VIRGINIA

TYPICAL SECTION

CHRISTIANSTED BY-PASS
83+33 TO 95+35

10/11/2006 11:33:43 AM W:\Projects\vi\st_croix\nh66(008)proj_dev\Contract 2\TYPICAL\V2.dgn

REG	STATE	PROJECT	SHEET NO.	TOTAL SHEETS
SE	VI	NH-66(008)	C3	193

TEMPORARY PAVEMENT STRUCTURE:

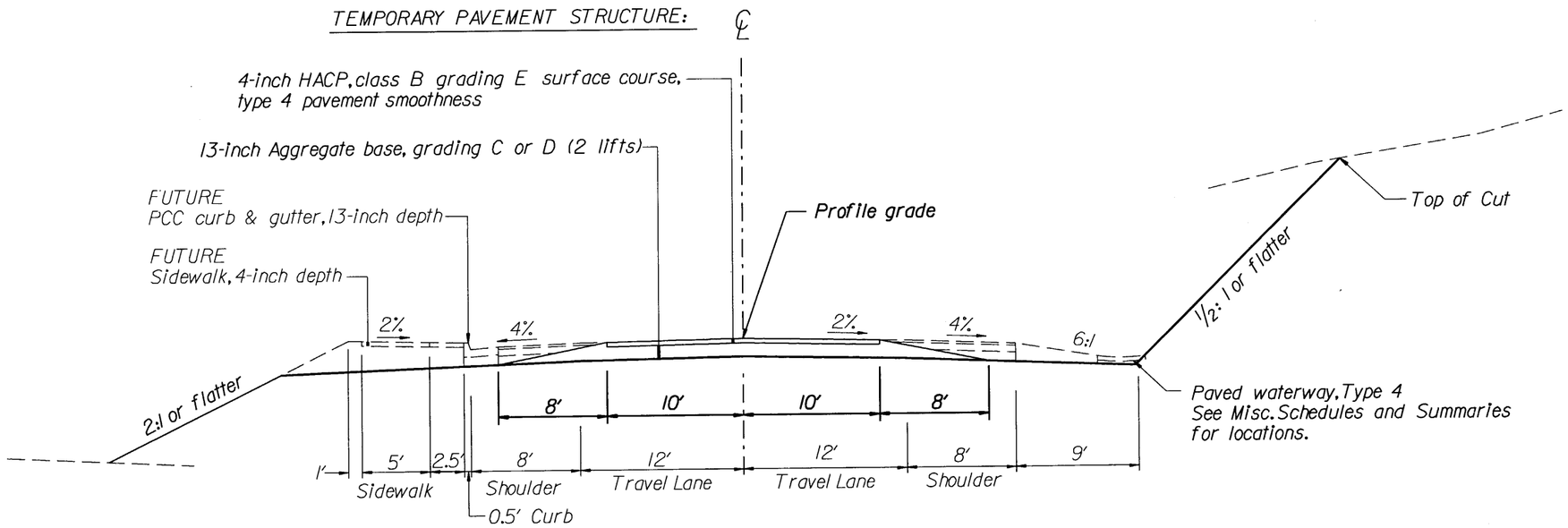

CHRISTIANSTED BYPASS

98+00 TO 99+80

TEMPORARY AGGREGATE STRUCTURE:

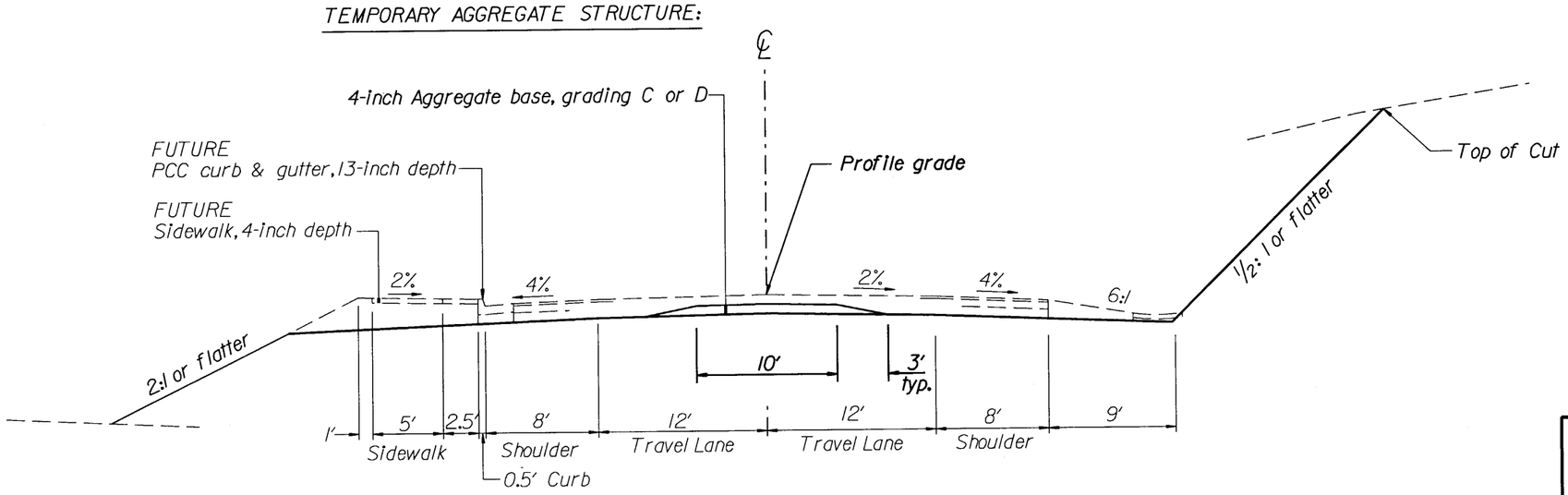

CHRISTIANSTED BYPASS

76+00 TO 78+80
88+25 TO 98+00

U.S. DEPARTMENT OF TRANSPORTATION
FEDERAL HIGHWAY ADMINISTRATION
EASTERN FEDERAL LANDS HIGHWAY DIVISION
STERLING, VIRGINIA

TYPICAL SECTION

CHRISTIANSTED BY-PASS
TEMPORARY PAVEMENT

10/11/2006 11:40:53 AM M:\Projects\vifls\st_grd\x\nh66(008)proj_dev\Contract 2\TYPICALV2.dgn

REG	STATE	PROJECT	SHEET NO.	TOTAL SHEETS
SE	VI	NH-66(008)	C4	193

Notes :

1. FUTURE work shown for information only. Construct proposed profile grade to top of subgrade. Aggregate, asphalt pavement, curb&gutter, sidewalk and concrete barrier will be constructed under a future contract.

2. See Detail 552 for Anchor Block location and size.

3. Excavate rock to 6 inches below top of subgrade.

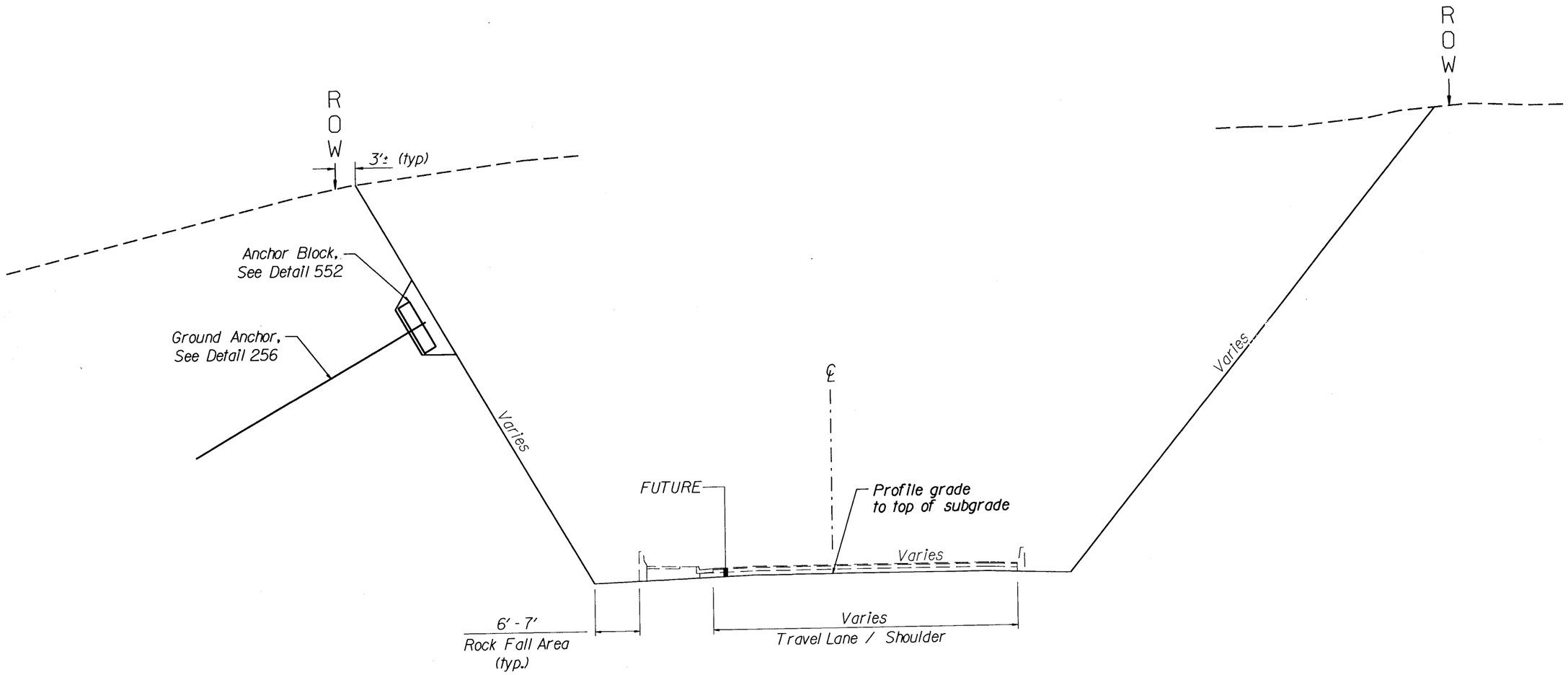

CUT B and CUT C
WITH ANCHOR BLOCKS
AND GROUND ANCHORS

U.S. DEPARTMENT OF TRANSPORTATION
FEDERAL HIGHWAY ADMINISTRATION
EASTERN FEDERAL LANDS HIGHWAY DIVISION
STERLING, VIRGINIA

TYPICAL SECTION
CHRISTIANSTED BY-PASS
CUT B and CUT C
with ANCHOR BLOCKS

10/13/2006 1:37:53 PM Projects\vlis\st_croix\nh66(008)proj_dev\Contract 2\TYPICALV2.dgn

REG	STATE	PROJECT	SHEET NO.	TOTAL SHEETS
SE	VI	NH-66(008)	C5	193

PROPOSED PAVEMENT STRUCTURE

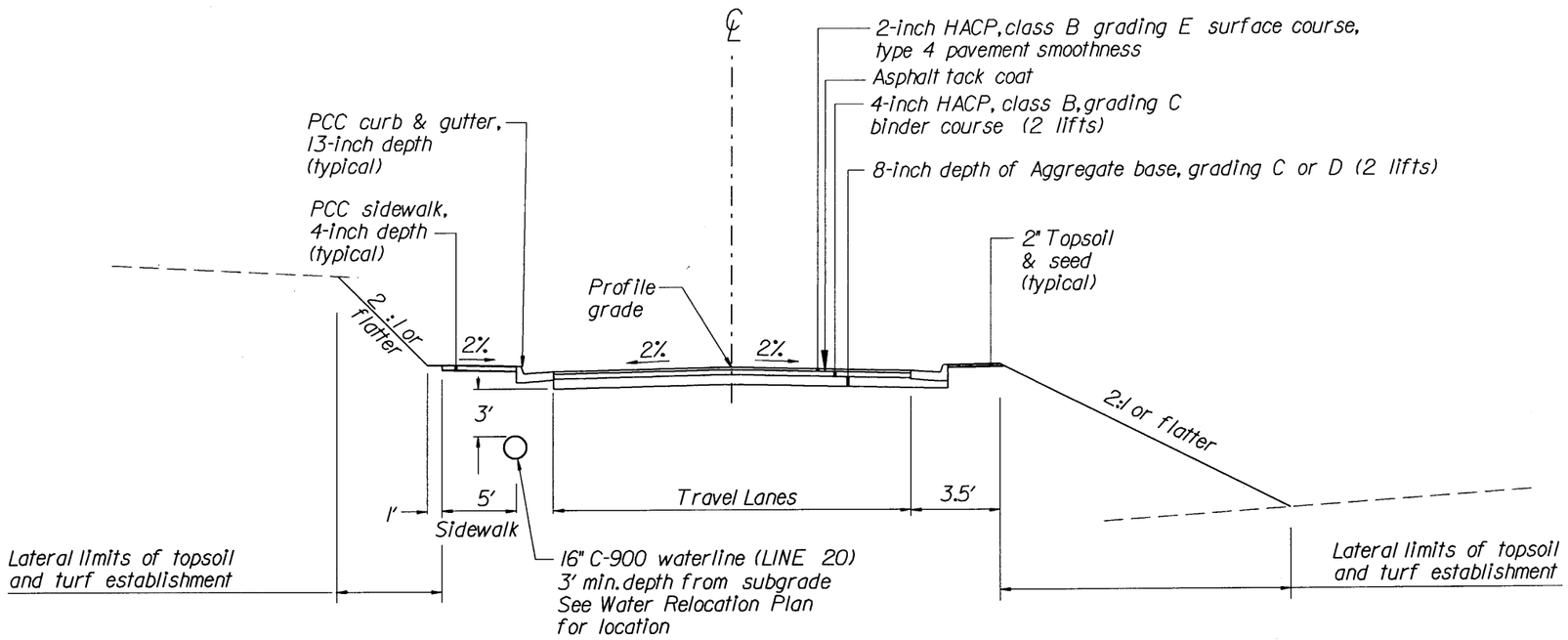

PAVED SECTION

LINES 11, 20, 32, 32A

NOTES:

1. Place 5' wide sidewalk along access and sideroads where shown on the plans.
2. Place PCC curb and gutter where shown on the table.
3. Travel lane width varies at intersections and tie-ins to existing roads.

Travel Width	Lines	Sidewalk	Curb & Gutter
12'	32A	No	Yes
15'	A, A1, B, C	No	No
20'	11	No	No
24'	20	Yes	Yes
28'	32	Yes	Yes

FUTURE PAVEMENT STRUCTURE:

PROPOSED

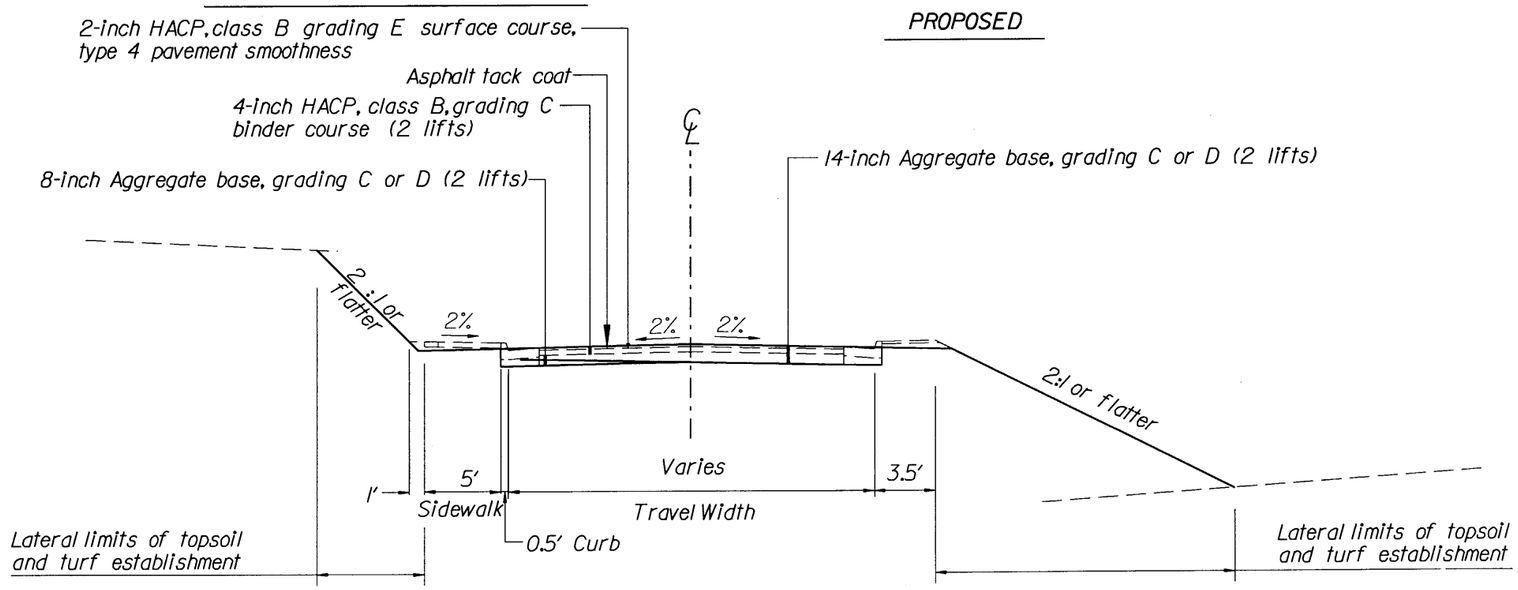

AGGREGATE SECTION

LINES A, B, A1, C

U.S. DEPARTMENT OF TRANSPORTATION
FEDERAL HIGHWAY ADMINISTRATION
EASTERN FEDERAL LANDS HIGHWAY DIVISION
STERLING, VIRGINIA

TYPICAL SECTION

DRIVEWAYS & SIDEROADS

10/11/2006 1:08:43 PM N:\Projects\vi\st_croix\nh66\008\proj_dev\Contract 2\TYPICALV2.dgn

REG	STATE	PROJECT	SHEET NO.	TOTAL SHEETS
SE	VI	NH-66(008)	DI	193

PLAN SHEET SECTION -------->>					ESTIMATED QUANTITIES	
ITEM	DESCRIPTION	UNIT			PLAN	BID SCHEDULE
15101	MOBILIZATION	LPSM			ALL	ALL
15201	CONSTRUCTION SURVEY AND STAKING	LPSM			ALL	ALL
15401	CONTRACTOR TESTING	LPSM			ALL	ALL
15703	SILT FENCE (Wire-backed)	LNFT	4150		4150	4,150
15705	SLOPE DRAINS	LNFT	120		120	120
15716	INLET PROTECTION	EACH	4		4	4
15718	STABILIZED CONSTRUCTION ENTRANCE	EACH	3		3	3
15722	TEMPORARY DIVERSION BERM	LNFT	1000		1000	1,000
15724	TEMPORARY DIVERSION CHANNEL	LNFT	610		610	610
15801	WATERING FOR DUST CONTROL (1000 Gallon)	MGAL	140		140	140
20101	CLEARING AND GRUBBING	ACRE	9.7		9.7	9.7
20401	ROADWAY EXCAVATION	CUYD	185873		185873	185,873
20421	ROCK EXCAVATION	CUYD	88123		88123	88,123
25101C	PLACED RIPRAP, CLASS 3	CUYD	300		300	300
25101C	PLACED RIPRAP, CLASS 3 (temp outlet protect)	CUYD	1		1	1
25601	GROUND ANCHOR , 1 3/8" Diameter All-Thread-Bar Ground Anchor	EACH	64		64	64
25602	PERFORMANCE TEST	EACH	9		9	9
25902K	ROCKBOLT, CEMENT GROUTED, 20 FEET LONG	EACH	185		185	185
30101Z	AGGREGATE BASE, GRADING C OR D	TON	4250		4250	4,250
40101BC	HOT ASPHALT CONCRETE PAVEMENT, CLASS B, GRADING C	TON	700		700	700
40101BED	HOT ASPHALT CONCRETE PAVEMENT, CLASS B, GRADING E, TYPE 4 PAVEMENT SMOOTHNESS	TON	440		440	440
41202	TACK COAT	GAL	170		170	170

U.S. DEPARTMENT OF TRANSPORTATION
FEDERAL HIGHWAY ADMINISTRATION
EASTERN FEDERAL LANDS HIGHWAY DIVISION
STERLING, VIRGINIA

TABULATION OF QUANTITIES

Sheet 1 of 4

4/23/2007 7:06:27 AM M:\Projects\vlls\st_crat\nh66(008)\proj_dev\Contract 2\schedule\7.dgn

REG	STATE	PROJECT	SHEET NO.	TOTAL SHEETS
SE	VI	NH-66(008)	D2	193

PLAN SHEET SECTION -------->>					ESTIMATED QUANTITIES	
ITEM	DESCRIPTION	UNIT			PLAN	BID SCHEDULE
41301	ASPHALT PAVEMENT MILLING	SQYD	600		600	600
55214A	STRUCTURAL CONCRETE, CLASS A (AE) FOR 8 FOOT X 8 FOOT X 1 FOOT-9 INCH ANCHOR BLOCK	EACH	64		64	64
56601N	SHOTCRETE, 6-INCH DEPTH	SQYD	500		500	500
60104	CONCRETE (STILLING BASIN,42-INCH PIPE)	EACH	1		1	1
60104	CONCRETE (STILLING BASIN, 6x5 BOX)	EACH	1		1	1
60201K	18-INCH PIPE CULVERT	LNFT	360		360	360
60201M	24-INCH PIPE CULVERT	LNFT	1160		1160	1,160
60201Q	42-INCH PIPE CULVERT	LNFT	280		280	280
60203L	21-INCH EQUIVALENT DIAMETER, ARCH OR ELLIPTICAL CULVERT PIPE	LNFT	100		100	100
60206K	END SECTION FOR 18-INCH PIPE CULVERT	EACH	8		8	8
60206M	END SECTION FOR 24-INCH PIPE CULVERT	EACH	5		5	5
60206Q	END SECTION FOR 42-INCH PIPE CULVERT	EACH	1		1	1
60211FE	6-FOOT SPAN, 5-FOOT RISE REINFORCED CONCRETE BOX CULVERT, SINGLE BARREL	LNFT	105		105	105
60212EC	5-FOOT SPAN, 3-FOOT RISE REINFORCED CONCRETE BOX CULVERT, DOUBLE BARREL	LNFT	255		255	255
60214CBAC	BOX CULVERT WINGWALLS, 3-FOOT HEIGHT, DOUBLE BARREL, NORMAL SKEW, 2:1 SIDE SLOPES	EACH	4		4	4
60214EAAC	BOX CULVERT WINGWALLS, 5-FOOT HEIGHT, SINGLE BARREL, NORMAL SKEW, 2:1 SIDE SLOPES	EACH	1		1	1
60401	MANHOLE	EACH	7		7	7
60403DB	INLET, TYPE 4B	EACH	2		2	2
60403FA	INLET, TYPE 6A	EACH	17		17	17

U.S. DEPARTMENT OF TRANSPORTATION
FEDERAL HIGHWAY ADMINISTRATION
EASTERN FEDERAL LANDS HIGHWAY DIVISION
STERLING, VIRGINIA

TABULATION OF QUANTITIES

Sheet 2 of 4

4/23/2007 7:07:04 AM M:\Projects\wils\st_crolx\nh66(008)proj_dev\Contract 2\scheduleV7.dgn

REG	STATE	PROJECT	SHEET NO.	TOTAL SHEETS
SE	VI	NH-66(008)	D3	193

PLAN SHEET SECTION --------->>					ESTIMATED QUANTITIES	
ITEM	DESCRIPTION	UNIT			PLAN	BID SCHEDULE
60403GA	INLET, TYPE 7A	EACH	1		1	1
60408	JUNCTION BOX	EACH	1		1	1
60426	OIL/GRIT SEPARATOR (1/2k Baysaver)	EACH	1		1	1
60426	OIL/GRIT SEPARATOR (1k Baysaver)	EACH	1		1	1
60426	OIL/GRIT SEPARATOR (3k Baysaver)	EACH	1		1	1
60801D	PAVED WATERWAY, TYPE 4	SQYD	240		240	240
60902V	PORTLAND CEMENT CONCRETE CURB AND GUTTER, 13-INCH DEPTH	LNFT	2025		2025	2,025
61102ND	8-INCH WATERLINE, POLYVINYL CHLORIDE (PVC) C-900	LNFT	200		200	200
61102SD	16-INCH WATERLINE, POLYVINYL CHLORIDE (PVC) C-900	LNFT	730		730	730
61103TD	18-INCH ENCASEMENT PIPE, POLYVINYL CHLORIDE (PVC) C-900	LNFT	120		120	120
61103UD	24-INCH ENCASEMENT PIPE, POLYVINYL CHLORIDE (PVC) C-900	LNFT	85		85	85
61104DN	VALVE, GATE, 8-INCH	EACH	1		1	1
61104DP	VALVE, GATE, 10-INCH	EACH	1		1	1
61104DS	VALVE, GATE, 16-INCH	EACH	2		2	2
61106	FIRE HYDRANT	EACH	1		1	1
61119	WATER MANHOLE	Each	1		1	1
61501B	PORTLAND CEMENT CONCRETE SIDEWALK	SQYD	530		530	530
61505B	PORTLAND CEMENT CONCRETE WHEELCHAIR RAMP	SQYD	5		5	5
61901CL	FENCE, CHAIN LINK TYPE, 96-INCH HEIGHT	LNFT	2530		2530	2,530
61902CL	GATE, CHAIN LINK TYPE, 22-FOOT WIDTH	EACH	4		4	4
61910	FENCE, ROCK FALL NETTING	SQYD	5480		5480	5,480
61910	FENCE, ROCK FALL NETTING (CONTINGENCY)	SQYD	850		850	850
62101	MONUMENT	EACH	56		56	56
62404F	PLACING CONSERVED TOPSOIL, 2-INCH DEPTH	SQYD	27000		27000	27,000

U.S. DEPARTMENT OF TRANSPORTATION
FEDERAL HIGHWAY ADMINISTRATION
EASTERN FEDERAL LANDS HIGHWAY DIVISION
STERLING, VIRGINIA

TABULATION OF QUANTITIES

4/23/2007 7:07:24 AM M:\Projects\wils\st_crolx\nh66(008)proj_dev\Contract 2\schedule\7.dgn

...\Contract 2\scheduleV7.dgn 4/23/2007 7:07:24 AM

REG	STATE	PROJECT	SHEET NO.	TOTAL SHEETS
SE	VI	NH-66(008)	D4	193

PLAN SHEET SECTION --------->>					ESTIMATED QUANTITIES	
ITEM	DESCRIPTION	UNIT			PLAN	BID SCHEDULE
62501B	SEEDING, HYDRAULIC METHOD	ACRE	5.6		5.6	5.6
62504B	MULCHING, HYDRAULIC METHOD	ACRE	5.6		5.6	5.6
62508	WATER (1000 Gallon)	MGAL	51		51	51
62801B	ROW SPRIGGING (vetiver planting)	ACRE	3.5		3.5	3.5
62901B	EROSION CONTROL MAT TYPE 2	SQYD	1240		1240	1,240
62901D	EROSION CONTROL MAT TYPE 4	SQYD	1550		1550	1,550
62901E	EROSION CONTROL MAT TYPE 5	SQYD	1650		1650	1,650
63302	SIGN INSTALLATION	SQFT	35		35	35
63401HA	PAVEMENT MARKINGS, TYPE H, SOLID	LNFT	5660		5660	5,660
63402H	PAVEMENT MARKINGS, TYPE H	SQFT	200		200	200
63501	TEMPORARY TRAFFIC CONTROL	LPSM			ALL	ALL
63701	FIELD OFFICE	EACH	1		1	1

U.S. DEPARTMENT OF TRANSPORTATION
FEDERAL HIGHWAY ADMINISTRATION
EASTERN FEDERAL LANDS HIGHWAY DIVISION
STERLING, VIRGINIA

TABULATION OF QUANTITIES

Sheet 2 of 2

4/23/2007 7:07:51 AM M:\Projects\wils\st_crolx\nh66(008)\proj_dev\Contract 2\scheduleV7.dgn

REG	STATE	PROJECT	SHEET NO.	TOTAL SHEETS
SE	VI	NH-66(008)	E1	193

ROADWAY	20401 EXCAVATION (cubic yard)	20421 ROCK EXCAVATION (cubic yard)	EMBANKMENT (cubic yard) (no pay)
CHRISTIANSTED BYPASS	169,729	88,123	75,767
LINE 20	4,582		822
LINE A	5,669		97
LINE B	256		3
LINE A1	1,869		2,019
LINE 11	44		74
LINE C	3,274		211
LINE 32	206		112
LINE 32A	244		1
TOTAL	185,873	88,123	79,106

NOTES :

1. For subsurface information, refer to the project Geotechnical Report and memos.

2. Special methods and equipment will be required for rock excavation.
See Special Contract Requirements for additional information.

3. Excess excavation material will be hauled to and disposed of at the waste site, as directed by the CO.

U.S. DEPARTMENT OF TRANSPORTATION
FEDERAL HIGHWAY ADMINISTRATION
EASTERN FEDERAL LANDS HIGHWAY DIVISION
STERLING, VIRGINIA

EARTHWORK SUMMARY

10/13/2006 2:28:29 PM M:\Projects\vi\st_croix\nh66(008)\proj_dev\Contract 2\schedule\7.dgn

REG	STATE	PROJECT	SHEET NO.	TOTAL SHEETS
SE	VI	NH-66(008)	E2	193

DRAINAGE SUMMARY

STATION	MAX. COVER Feet	CULVERT PIPE LENGTH (Feet) 18 Inch	24 Inch	42 Inch		2r EQUIV. DIAMETER PIPE OR ARCH			6' x 5' box culvert	Double 5' x 3' box culvert		TERMINI Lt.	Rt.		RIPRAP CLASS 3 yd^3		REMARKS
CHRISTIANSTED BYPASS																	
76+40			87									IN-6A	--				- Tie to 5' x 6' box culvert with 1k Baysaver
77+30.43									105			--	WW		39		- Left termini stilling basin
86+16.70				274								--	ES		15.8		- Left termini stilling basin
93+50			55									IN-6A	IN-4B				
93+50			18									IN-4B	IN-6A				
97+68			76									IN-6A	--				- Outlet to riprap channel
99+50						56						IN-6A	IN-6A				
99+50						38						IN-6A	IN-7A				
99+50										95		IN-7A	--				- Double box / Outlet to existing riprap channel, Inlet 7A with 1/2k Baysaver
TOTALS (this sheet)			236	274		94			105	95					54.8		

NOTE:
1. Locations, maximum cover, length and types of termini are approximations and are subject to adjustment to field conditions. The CO will furnish order in writing for each structure after field stakeout.
WW = Wingwall
HW = Headwall
ES = Endsection
IN = Inlet

2. For inlet details, see E604-1, E604-5 and 604-8.

U.S. DEPARTMENT OF TRANSPORTATION
FEDERAL HIGHWAY ADMINISTRATION
EASTERN FEDERAL LANDS HIGHWAY DIVISION
STERLING, VIRGINIA

DRAINAGE SUMMARY

Sheet 1 of 3

W:/PROJECTS/NPS/STCROIX/66008V/PROJ_DEV/DESIGN/SCHEDULE.DGN

REG	STATE	PROJECT	SHEET NO.	TOTAL SHEETS
SE	VI	NH-66(008)	E3	193

DRAINAGE SUMMARY

STATION	MAX. COVER Feet	CULVERT PIPE LENGTH (Feet) 18 Inch	24 Inch	42 Inch		21" EQUIV. DIAMETER PIPE OR ARCH			6' x 5' box culvert	Double 5' x 3' box culvert		TERMINI Lt.	Rt.		RIPRAP CLASS 3 yd^3		REMARKS
CHRISTIANSTED BYPASS																	
93+50 BYPASS			167									IN-6A	MH				- Left of Bypass centerline, tie to junction box
95+17 BYPASS			133									MH	IN-6A				- Left of Bypass centerline, tie to junction box
96+50 BYPASS			100									IN-6A					- Left of Bypass centerline, with 3k Baysaver
Riprap Channel 96+00 to 98+22															227.1		
TOTALS (this sheet)			400												227.1		

NOTE:
1. Locations, maximum cover, length and types of termini are approximations and are subject to adjustment to field conditions. The CO will furnish order in writing for each structure after field stakeout.
WW = Wingwall
HW = Headwall
ES = Endsection
IN = Inlet

2. For inlet details, see E604-1, E604-5 and 604-8.

U.S. DEPARTMENT OF TRANSPORTATION
FEDERAL HIGHWAY ADMINISTRATION
EASTERN FEDERAL LANDS HIGHWAY DIVISION
STERLING, VIRGINIA

DRAINAGE SUMMARY

Sheet 2 of 3

W:/PROJECTS/VIS/STCROIX/66(008)/PROJ_DEV/DESIGN/SCHEDULE.DGN

REG	STATE	PROJECT	SHEET NO.	TOTAL SHEETS
SE	VI	NH-66(008)	E4	193

DRAINAGE SUMMARY

STATION	MAX. COVER Feet	CULVERT PIPE LENGTH (Feet) 18 Inch	24 Inch	42 Inch		21" EQUIV. DIAMETER PIPE OR ARCH			6' x 5' box culvert	Double 5' x 3' box culvert		TERMINI Lt.	Rt.		RIPRAP CLASS 3 yd^3		REMARKS
1+31 LINE 32A		126										IN-6A	IN-6A				
1+40 LINE 11		60										ES	ES		1.7		
1+40 LINE C		62										ES	ES		1.7		
1+62 LINE 32										158							- Double box, collect from class 3 riprap channel
1+90 LINE 32 (20'RT)		45										ES	ES		1.7		
1+25 LINE 20			88									IN-6A	IN-6A				
1+36 LINE A		56										ES	ES		1.7		
2+39 Line 20			20									IN-6A	IN-6A				
2+39 Line 20			17									IN-6A	ES		2.6		
4+90 Line 20			20									IN-6A	IN-6A				
4+90 Line 20 (15' Lt)			140									IN-6A	IN-6A				- From Inlet at 4+90 to Inlet at 6+40
6+19 Line 20			45									IN-6A	IN-6A				- To Inlet at 6+40
6+40 Line 20			140									IN-6A	ES		2.6		
8+60 Line 20			20									IN-6A	IN-6A				
8+60 Line 20			30									IN-6A	ES		2.6		
TOTAL (this sheet)		349	520							158					14.6		
TOTALS (all sheets)		349	1156	274		94			105	253					296.5		
ROUNDED TOTALS		360	1160	280		100			105	255					300		

NOTE:

1. Locations, maximum cover, length and types of termini are approximations and are subject to adjustment to field conditions. The CO will furnish order in writing for each structure after field stakeout.
   WW = Wingwall
   HW = Headwall
   ES = Endsection
   IN = Inlet

2. For inlet details, see E604-1, E604-5 and 604-8.

U.S. DEPARTMENT OF TRANSPORTATION
FEDERAL HIGHWAY ADMINISTRATION
EASTERN FEDERAL LANDS HIGHWAY DIVISION
STERLING, VIRGINIA

DRAINAGE SUMMARY

Sheet 3 of 3

W:/PROJECTS/VI15/STORM/66(008)/PROJ_DEV/DESIGN/SCHEDULE.DGN

REG	STATE	PROJECT	SHEET NO.	TOTAL SHEETS
SE	VI	NH-66(008)	E5	193

CONSTRUCTION SIGN SCHEDULE

Sign No.	Text No.	Sign Text	LOCATION		PANEL SIZE						TEXT SIZE				Color Combination	Quantity	Total Area (sq ft)	Remarks
			Station	Side	Width (in)	Height (in)	Area (sq ft)	Corner Radii (in)	Border Width (in)	Margin Width (in)	Numbers (in)	Upper Case (in)	Lower Case (in)	Series				
	W20-1	ROAD WORK XXXX	--	--	36	36	9				See Note 1				Black on Orange	5	45	FOR INFORMATION ONLY
	W20-4	ONE LANE ROAD XXXX	--	--	36	36	9				See Note 1				Black on Orange	2	18	
	W21-5	SHOULDER WORK	--	--	30	30	6.25				See Note 1				Black on Orange	2	12.5	
	W20-7a		--	--	36	36	9				See Note 1				Black on Orange	2	18	
															Subtotal (this sheet)	11	93.5	

NOTES:

1. See Manual on Uniform Traffic Control Devices, Latest Edition and the Standard Highway Signs book for dimensions.
2. Get approval from the CO on final location of signs.
3. See Construction Traffic Control Plans for approximate location of signs.

U.S. DEPARTMENT OF TRANSPORTATION
FEDERAL HIGHWAY ADMINISTRATION
EASTERN FEDERAL LANDS HIGHWAY DIVISION
STERLING, VIRGINIA

CONSTRUCTION SIGN SCHEDULE

Sheet 1 of 2

m:\projects\vis\st_croix\nh66(008)\proj_dev\design\schedule.dgn

REG	STATE	PROJECT	SHEET NO.	TOTAL SHEETS
SE	VI	NH-66(008)	E6	193

CONSTRUCTION SIGN SCHEDULE

Sign No.	Text No.	Sign Text	LOCATION Station	LOCATION Side	PANEL SIZE Width (in)	PANEL SIZE Height (in)	PANEL SIZE Area (sq ft)	PANEL SIZE Corner Radii (in)	PANEL SIZE Border Width (in)	PANEL SIZE Margin Width (in)	TEXT SIZE Numbers (in)	TEXT SIZE Upper Case (in)	TEXT SIZE Lower Case (in)	TEXT SIZE Series	Color Combination	Quantity	Total Area (sq ft)	Remarks
	W16-2	500 FEET	--	--	24	18	3				See Note 1				Black on Orange	2	6	FOR INFORMATION ONLY
	W13-1	XX M.P.H.	--	--	24	24	4				See Note 1				Black on Orange	4	16	
	R11-2	ROAD CLOSED	--	--	48	30	10				See Note 1				Black on White	9	90	
	G20-2	END ROAD WORK	--	--	36	18	4.5				See Note 1				Black on Orange	2	9	
	R11-4	ROAD CLOSED TO THRU TRAFFIC	--	--	60	30	12.5				See Note 1				Black on White	3	37.5	
	W21-1A		--	--	36	36	9				See Note 1				Black on Orange	2	18	
															Subtotal (this sheet)	22	176.5	
															Total	33	270.0	

NOTES:

1. See Manual on Uniform Traffic Control Devices, Latest Edition and the Standard Highway Signs book for dimensions.
2. Get approval from the CO on final location of signs.
3. See Construction Traffic Control Plans for approximate location of signs.

U.S. DEPARTMENT OF TRANSPORTATION
FEDERAL HIGHWAY ADMINISTRATION
EASTERN FEDERAL LANDS HIGHWAY DIVISION
STERLING, VIRGINIA

CONSTRUCTION SIGN SCHEDULE

Sheet 2 of 2

m:\projects\vis\st_croix\nh66(008)\proj_dev\design\schedule.dgn

REG	STATE	PROJECT	SHEET NO.	TOTAL SHEETS
SE	VI	NH-66(008)	E7	193

Sign No.	Text No.	Sign Text	LOCATION Station	LOCATION Side	PANEL SIZE Width (in.)	PANEL SIZE Height (in.)	PANEL SIZE Area (sq ft)	PANEL SIZE Corner Radii (in.)	PANEL SIZE Border Width (in.)	PANEL SIZE Margin Width (in.)	TEXT SIZE Numbers (in.)	TEXT SIZE Upper Case (in.)	TEXT SIZE Lower Case (in.)	TEXT SIZE Series	Color Combination	Quantity	Total Area (sq ft)	Support (ft)	Remarks
1	R1-1	STOP	--	--	30	30	6.25	See Note 1							White on Red	3	18.75		
2	W8-4	SOFT SHOULDER	--	--	30	30	6.25	See Note 1							Black on Yellow	2	12.5		
															TOTAL	5	31.25		
															ROUNDED TOTAL	5	35		

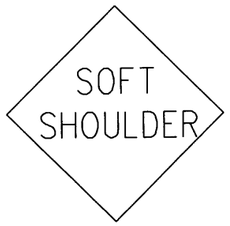

NOTES:

1. See Manual on Uniform Traffic Control Devices, Latest Edition and the Standard Highway Signs book for dimensions.
2. See Permanent Traffic Control Plans for location of signs.

U.S. DEPARTMENT OF TRANSPORTATION
FEDERAL HIGHWAY ADMINISTRATION
EASTERN FEDERAL LANDS HIGHWAY DIVISION
STERLING, VIRGINIA

PERMANENT SIGN SCHEDULE

10/13/2006 2:52:25 PM M:\Projects\vlis\st_crolx\nh66(008)proj_dev\Contract 2\schedule17.dgn

REG	STATE	PROJECT	SHEET NO.	TOTAL SHEETS
SE	VI	NH-66(008)	E8	193

41301 ASPHALT PAVEMENT MILLING	
ROADWAY - STATION	AREA (YD^2)
BYPASS - 99+80	200
LINE 11 - 2+98.20	50
LINE 20 - 6+50.00	50
LINE 20 - 8+70	100
LINE 32 - 2+94.83	100
LINE 32A - 1+83.68	50
As Required	50
TOTAL	600

60801D PAVED WATERWAY, TYPE 4	
STATION RANGE	AREA (YD^2)
BYPASS	
76+50 to 78+30	60
84+00 to 88+00	133.3
86+20 to 87+50	43.3
As Required	3.4
TOTAL	240

60902V PCC CURB AND GUTTER, 13-INCH DEPTH	
STATION RANGE	LINEAR FEET
LINE 20	
1+27 to 8+70 LT/RT	1,486
Turnout at 6+50 LT/RT	95
LINE 32	
1+30 to 2+94.83 LT/RT	286
Turnout	53
LINE 32A	
1+43 to 1+83 LT/RT	80
Partial curb return	20
As Required	5.0
TOTAL	2,025

61501B PCC SIDEWALK (5' WIDTH)	
STATION RANGE	AREA (YD^2)
LINE 20	
1+58 to 6+00 (Include curb returns)	317
6+65 to 8+70.92	115
LINE 32	
1+44 to 2+94.80 (Include curb return)	98
As Required	0
TOTAL	530

62901D EROSION CONTROL MAT, TYPE 4	
STATION RANGE	AREA (YD^2)
BYPASS	
79+00 to 79+50 RT	56
88+00 to 93+50 RT	611
90+00 to 93+50 LT	389
95+50 to 99+80 LT	478
As Required	16
TOTAL	1,550

63402H PAVEMENT MARKINGS, TYPE H	
ROADWAY - STATION	AREA (FT^2)
STOP BAR	
BYPASS - 99+75	60
LINE 20 - 33' RT	20
LINE 20 - 8+70	40
LINE 32 - 1+20	40
LINE 32A - 1+20	40
TOTAL	200

U.S. DEPARTMENT OF TRANSPORTATION
FEDERAL HIGHWAY ADMINISTRATION
EASTERN FEDERAL LANDS HIGHWAY DIVISION
STERLING, VIRGINIA

MISCELLANEOUS SCHEDULES AND SUMMARIES

10/13/2006 2:59:00 PM M:\Projects\vi\st_crol\nh66\008\proj_dev\Contract 2\schedule47.dgn

REG	STATE	PROJECT	SHEET NO.	TOTAL SHEETS
SE	VI	NH-66(008)	E9	193

EROSION AND SEDIMENT CONTROL ITEMS

ITEM NUMBER - NAME	UNIT	STAGE 1	STAGE 2	AS REQUIRED	REMARK
15703 SILT FENCE	Ln. Ft.	4,060	40	50	All silt fence will be wire-backed
15705 SLOPE DRAIN	Ln. Ft.	--	100	20	
15716 INLET PROTECTION	Each	4	--		
15718 STABILIZED CONSTRUCTION ENTRANCE	Each	3	--		
15722 TEMPORARY DIVERSION BERM	Ln. Ft.	840	160		
15724 TEMPORARY DIVERSION CHANNEL	Ln. Ft.	610	--		
15801 WATER FOR DUST CONTROL	M Gal	140	--		
25101C RIPRAP, CLASS 3 (for outlet protection)	Cubic Yard	1	--		
62801B ROW SPRIGGING (Vetiver)	Acre	--	3.5		
62901B EROSION CONTROL MAT, TYPE 2	Square Yard	--	1,213	27	Labeled as TDM - Temporary Ditch Matting on Erosion Control Plans
62901D EROSION CONTROL MAT, TYPE 4	Square Yard	--	1,533	17	
62901E EROSION CONTROL MAT, TYPE 5	Square Yard	--	1,633	17	Labeled as PDM - Permanent Ditch Matting on Erosion Control Plans

Notes :

1. Erosion and Sediment Control items are not limited to what is shown on this sheet. See Plans and other summaries for additional measures.

2. Some items placed during Stage 1 will remain in place during Stage 2. See Erosion Control Narrative for sequence of construction.

U.S. DEPARTMENT OF TRANSPORTATION
FEDERAL HIGHWAY ADMINISTRATION
EASTERN FEDERAL LANDS HIGHWAY DIVISION
STERLING, VIRGINIA

MISCELLANEOUS
EROSION & SEDIMENT
CONTROL ITEMS

10/13/2006 3:00:27 PM M:\Projects\vlis\st_croix\nh66(008)proj_dev\Contract 2\schedule17.dgn

REG	STATE	PROJECT	SHEET NO.	TOTAL SHEETS
SE	VI	NH-66(008)	F1	193

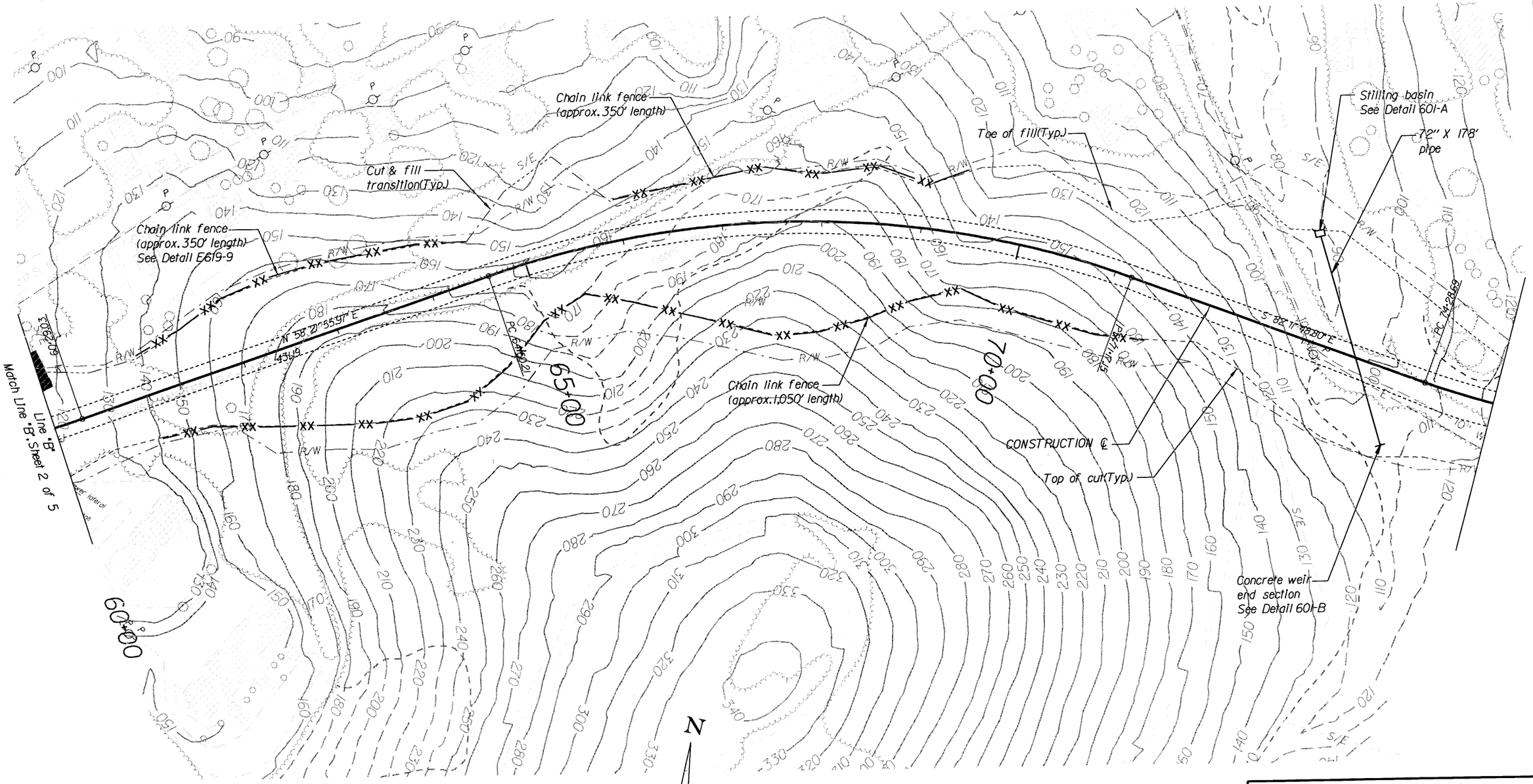

CURVE DATA

BYPASS
Δ = 39° 24' 58.85" (RT)
D= 5° 59' 59.99"
R= 954.93'
T= 342.07'
L= 656.94'

NOTE :
FOR INFORMATION ONLY.
CONSTRUCTED BY OTHERS UNDER
PROJECT VI NH 66(008)
PHASE IA - CONTRACT I

U.S. DEPARTMENT OF TRANSPORTATION
FEDERAL HIGHWAY ADMINISTRATION
EASTERN FEDERAL LANDS HIGHWAY DIVISION
STERLING, VIRGINIA

PLAN
CHRISTIANSTED BY-PASS
60+00 TO 75+00

0 50 100
SCALE IN FEET

SHEET 1 OF 7

10/13/2006 3:28:00 PM M:\Projects\vlis\st_croix\nh66(008)proj_dev\Contract 2\plansht.dgn

REG	STATE	PROJECT	SHEET NO.	TOTAL SHEETS
SE	VI	NH-66(008)	F2	193

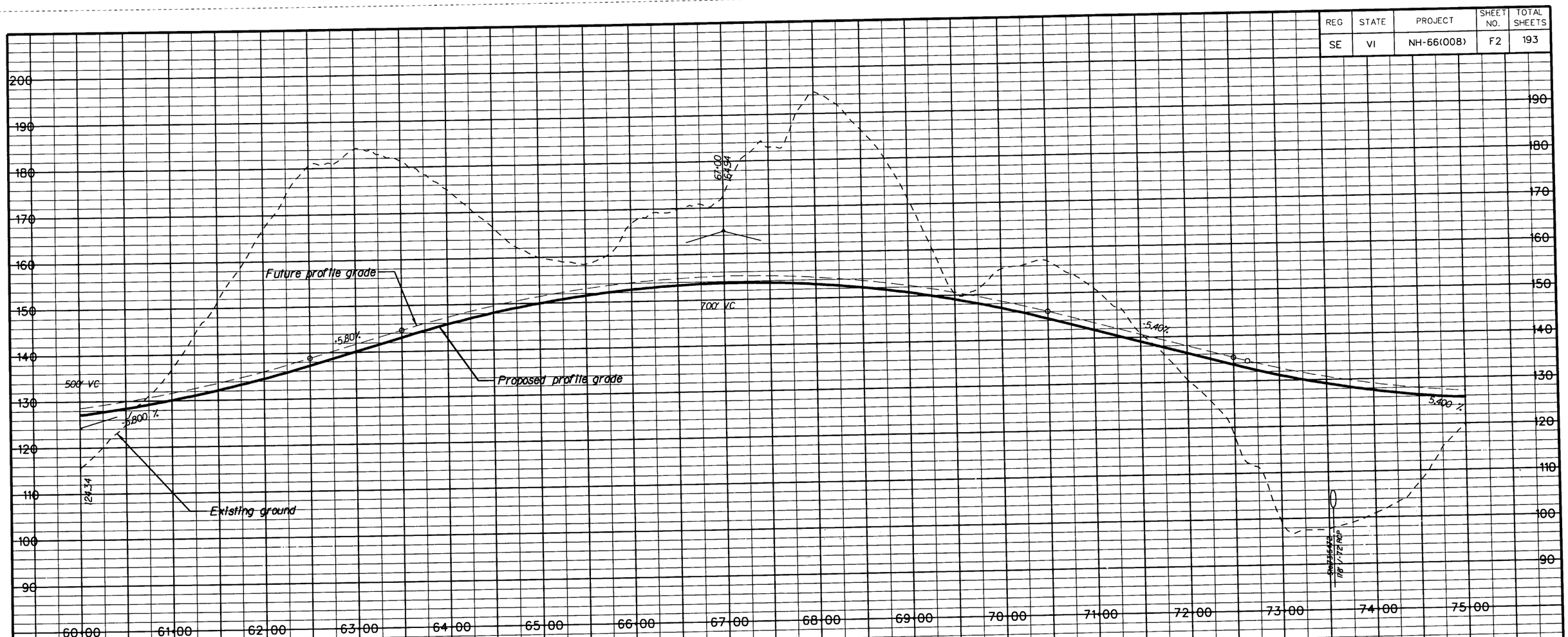

FOR INFORMATION ONLY.

CONSTRUCTED BY OTHERS UNDER PROJECT VI NH 66(008)
PHASE IA - CONTRACT 1

U.S. DEPARTMENT OF TRANSPORTATION
FEDERAL HIGHWAY ADMINISTRATION
EASTERN FEDERAL LANDS HIGHWAY DIVISION
STERLING, VIRGINIA

PROFILE

CHRISTIANSTED BY-PASS

60+00 TO 75+00

SHEET 2 OF 7

REG	STATE	PROJECT	SHEET NO.	TOTAL SHEETS
SE	VI	NH-66(008)	F3	193

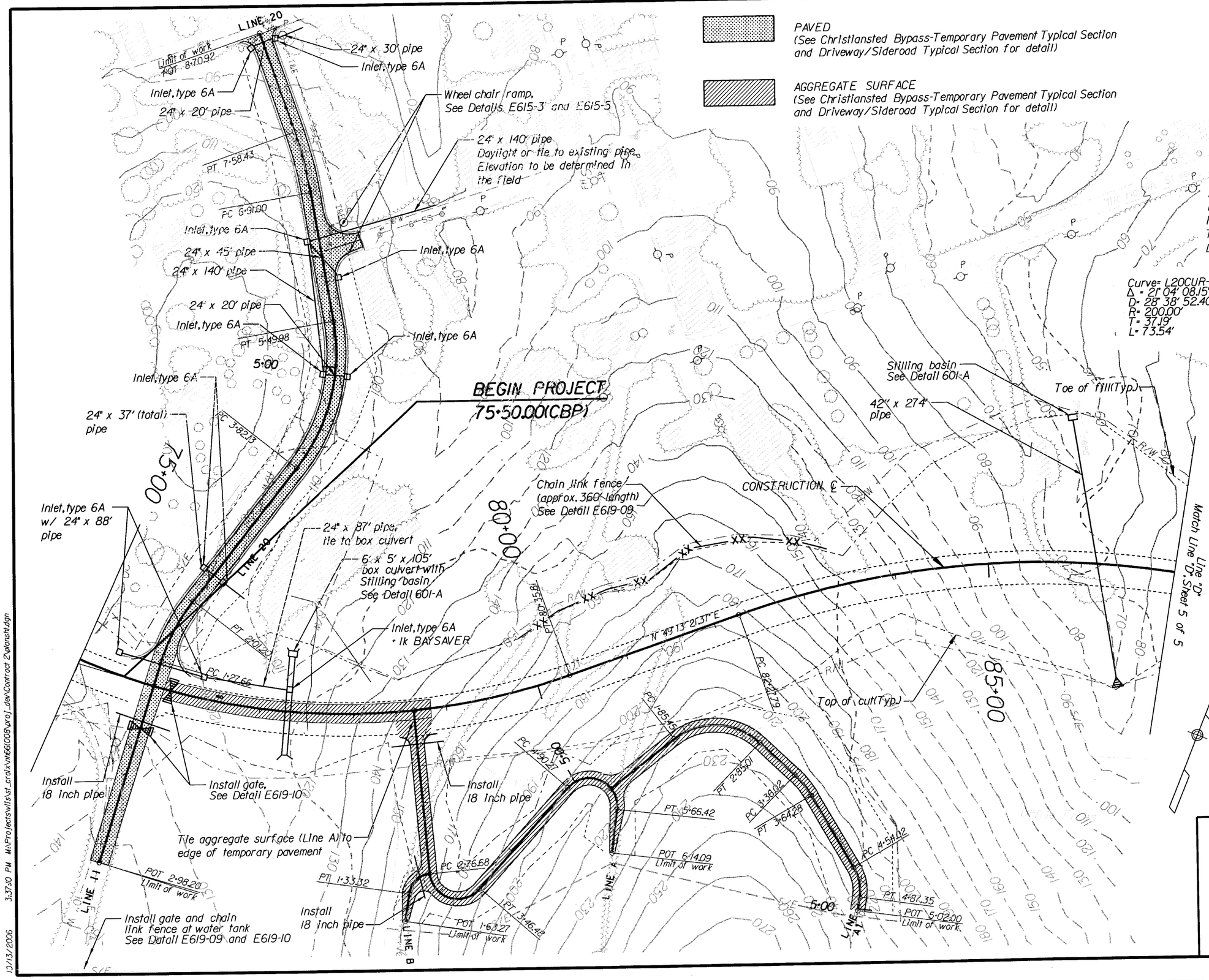

PAVED
(See Christiansted Bypass-Temporary Pavement Typical Section and Driveway/Sideroad Typical Section for detail)

AGGREGATE SURFACE
(See Christiansted Bypass-Temporary Pavement Typical Section and Driveway/Sideroad Typical Section for detail)

CENTERLINE DATA

75+83.69 Bypass = 1+00 Line 11
75+83.69 Bypass = 1+00 Line 20
78+65 Bypass = 1+00 Line A
2+76.68 Line A = 1+00 Line B
5+43.18 Line A = 1+00 Line A1

CURVE DATA

BYPASS

Δ = 48° 34' 09.86" (LT)
D= 8° 00' 00.00"
R= 716.20'
T= 323.15'
L= 607.12'

Δ = 35° 52' 31.60" (RT)
D= 5° 59' 59.99"
R= 954.93'
T= 309.13'
L= 597.92'

LINE 20

Curve= L20CUR-1
Δ = 21° 04' 08.15" (RT)
D= 28° 38' 52.40"
R= 200.00'
T= 37.19'
L= 73.54'

Curve= L20CUR-2
Δ = 48° 05' 16.29" (LT)
D= 28° 38' 52.40"
R= 200.00'
T= 89.23'
L= 167.86'

Curve= L20CUR-3
Δ = 9° 35' 22.06" (LT)
D= 14° 13' 18.98"
R= 402.87'
T= 33.79'
L= 67.43'

LINE A

Curve= LAHA-1
Δ = 133° 19' 10.60" (LT)
D= 190° 59' 09.35"
R= 30.00'
T= 69.52'
L= 69.81'

Curve= LAHA-2
Δ = 145° 26' 16.49" (RT)
D= 190° 59' 09.35"
R= 30.00'
T= 96.43'
L= 76.15'

LINE B

Curve= LBHA-1
Δ = 76° 21' 11.74" (LT)
D= 229° 10' 59.22"
R= 25.00'
T= 19.66'
L= 33.32'

LINE A1

Curve= LAIHA-1
Δ = 81° 29' 25.62" (RT)
D= 81° 51' 04.01"
R= 70.00'
T= 60.31'
L= 99.56'

Curve= LAIHA-2
Δ = 16° 11' 13.90" (RT)
D= 57° 17' 44.81"
R= 100.00'
T= 14.22'
L= 28.25'

Curve= LAIHA-3
Δ = 38° 11' 45.25" (RT)
D= 114° 35' 29.61"
R= 50.00'
T= 17.31'
L= 33.33'

U.S. DEPARTMENT OF TRANSPORTATION
FEDERAL HIGHWAY ADMINISTRATION
EASTERN FEDERAL LANDS HIGHWAY DIVISION
STERLING, VIRGINIA

PLAN
CHRISTIANSTED BY-PASS
75+00 TO 87+00
AND SIDE ROADS
LINES: 11,A,B,20

0 50 100
SCALE IN FEET

SHEET 3 OF 7

10/13/2006 3:37:10 PM M:\Projects\vils\st_croix\nh66(008)\proj_dev\Contract 2\plansht.dgn

REG	STATE	PROJECT	SHEET NO.	TOTAL SHEETS
SE	VI	NH-66(008)	F4	193

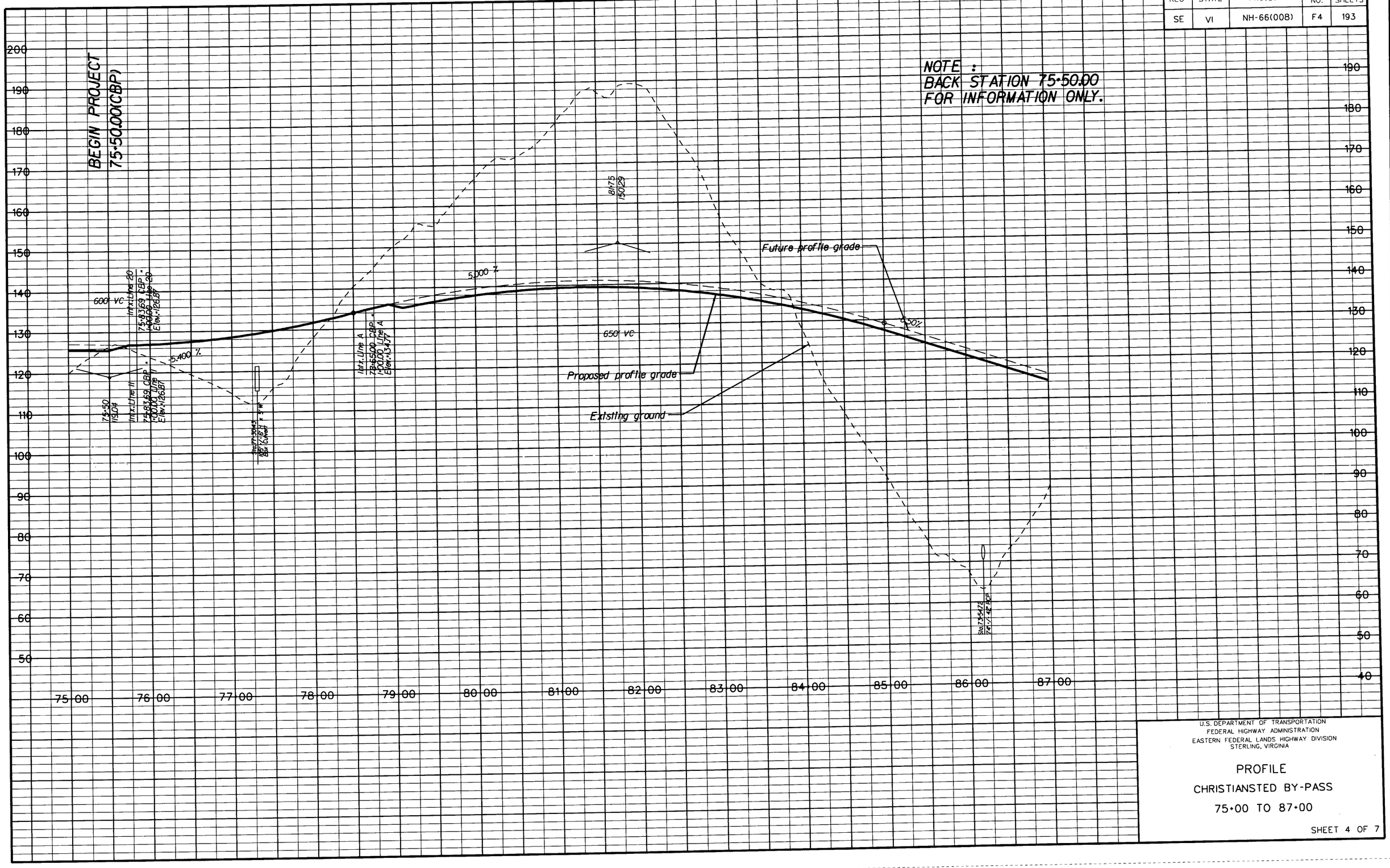

U.S. DEPARTMENT OF TRANSPORTATION
FEDERAL HIGHWAY ADMINISTRATION
EASTERN FEDERAL LANDS HIGHWAY DIVISION
STERLING, VIRGINIA

PROFILE

CHRISTIANSTED BY-PASS

75+00 TO 87+00

SHEET 4 OF 7

REG	STATE	PROJECT	SHEET NO.	TOTAL SHEETS
SE	VI	NH-66(008)	F5	193

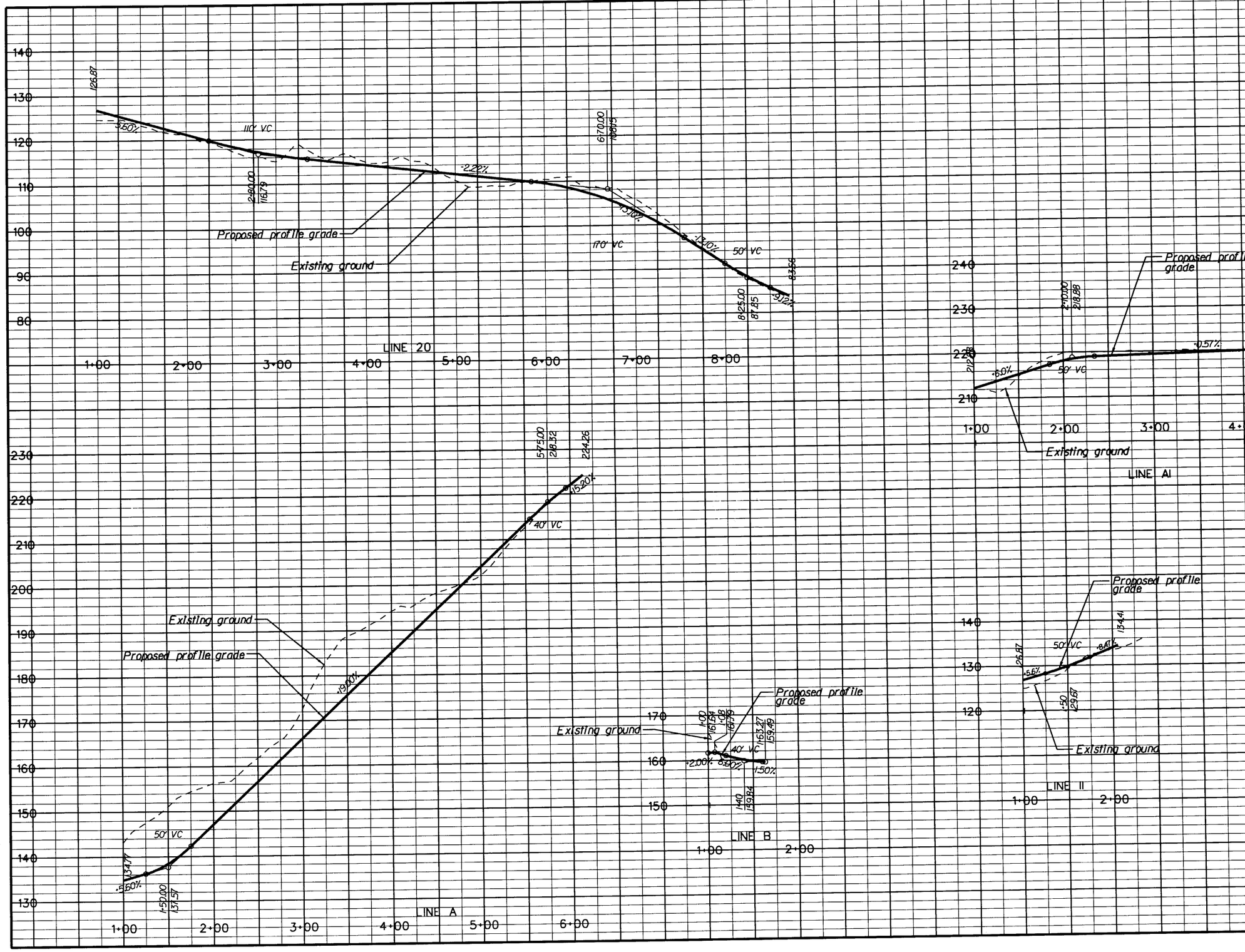

U.S. DEPARTMENT OF TRANSPORTATION
FEDERAL HIGHWAY ADMINISTRATION
EASTERN FEDERAL LANDS HIGHWAY DIVISION
STERLING, VIRGINIA

PROFILE

CHRISTIANSTED BY-PASS

SIDE ROADS

LINES: 20, A, A1, B, II

SHEET 5 OF 7

REG	STATE	PROJECT	SHEET NO.	TOTAL SHEETS
SE	VI	NH-66(008)	F6	193

Note :

Remove miscellaneous items (shown as ▬), includes a concrete foundation.

CENTERLINE DATA

88+47.54 Bypass = 1+00 Line C
98+39.63 Bypass = 1+00 Line 32
98+45.73 Bypass = 1+00 Line 32A

PAVED
(See Christiansted Bypass-Temporary Pavement Typical Section and Driveway/Sideroad Typical Section for detail)

AGGREGATE SURFACE
(See Christiansted Bypass-Temporary Pavement Typical Section and Driveway/Sideroad Typical Section for detail)

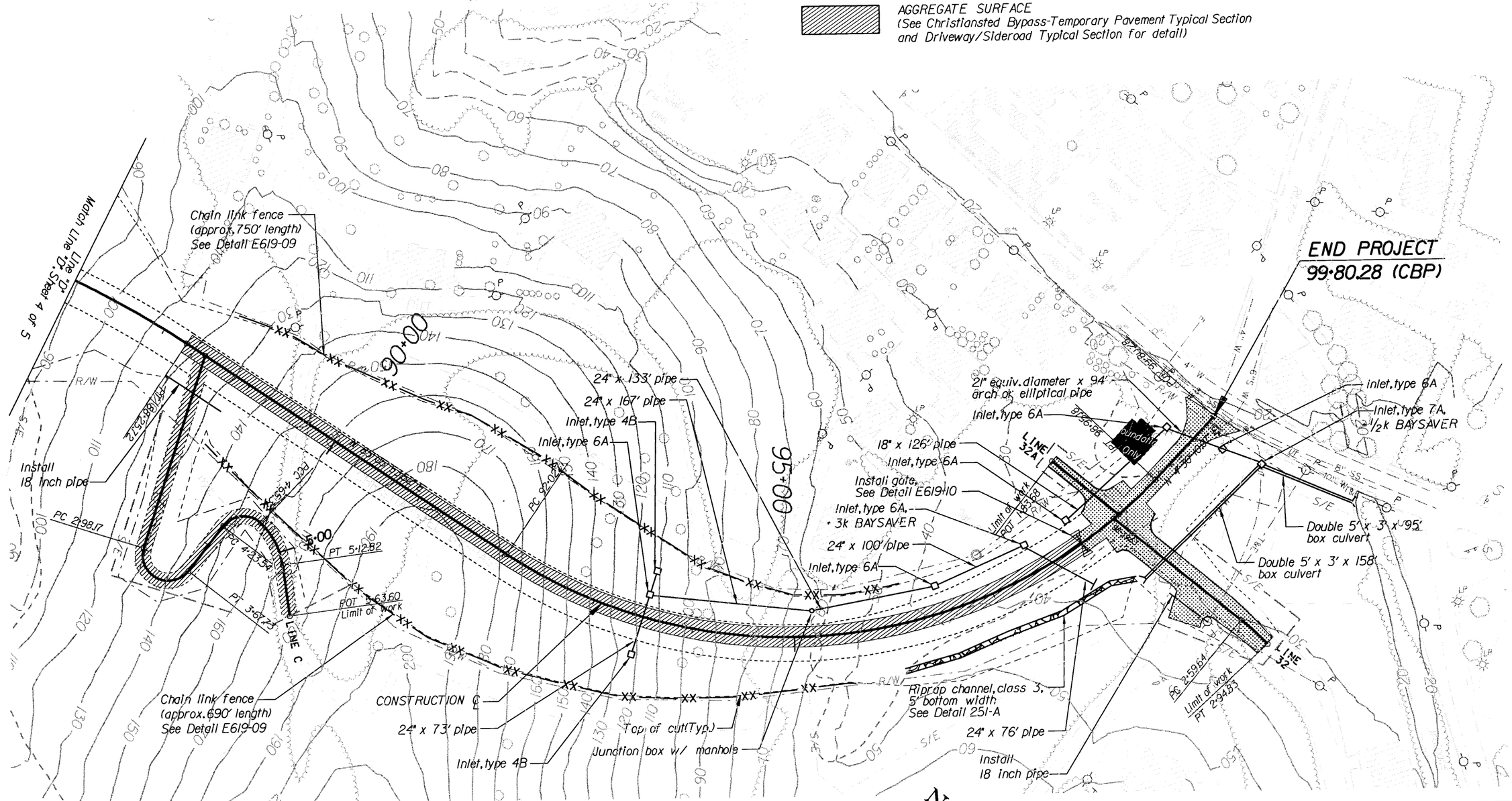

CURVE DATA

BYPASS
Δ = 79° 38' 07.15" (LT)
D= 11° 30' 00.26"
R= 498.22'
T= 415.36'
L= 692.48'

LINE C
Curve= LCHA-1
Δ = 159° 25' 03.06" (LT)
D= 229° 10' 59.22"
R= 25.00'
T= 137.69'
L= 69.56'

Curve= LCHA-2
Δ = 95° 44' 00.19" (RT)
D= 229° 10' 59.22"
R= 25.00'
T= 27.64'
L= 41.77'

LINE 32
Curve= L32HA-1
Δ = 8° 03' 52.52" (RT)
D= 22° 55' 05.92"
R= 250.00'
T= 17.62'
L= 35.19'

U.S. DEPARTMENT OF TRANSPORTATION
FEDERAL HIGHWAY ADMINISTRATION
EASTERN FEDERAL LANDS HIGHWAY DIVISION
STERLING, VIRGINIA

PLAN
CHRISTIANSTED BY-PASS
87+00 TO 99+80
AND SIDE ROADS
LINES: 32,32A

0 50 100
SCALE IN FEET

SHEET 6 OF 7

10/13/2006 3:59:28 PM M:\Projects\vils\st_crolx\nh66\008\proj_dev\Contract 2\plansht.dgn

REG	STATE	PROJECT	SHEET NO.	TOTAL SHEETS
SE	VI	NH-66(008)	F7	193

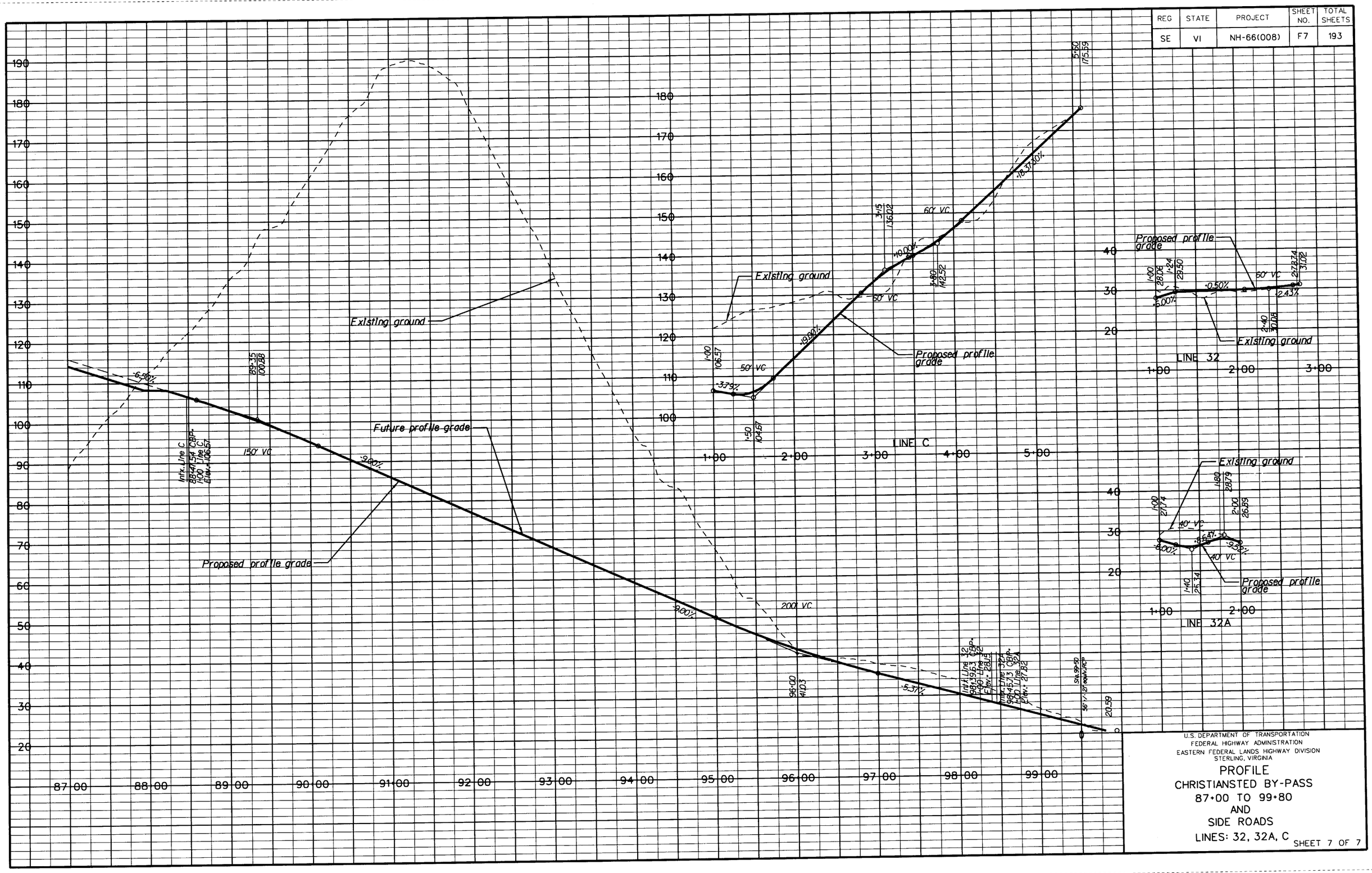

U.S. DEPARTMENT OF TRANSPORTATION
FEDERAL HIGHWAY ADMINISTRATION
EASTERN FEDERAL LANDS HIGHWAY DIVISION
STERLING, VIRGINIA

PROFILE
CHRISTIANSTED BY-PASS
87+00 TO 99+80
AND
SIDE ROADS
LINES: 32, 32A, C

SHEET 7 OF 7

REG	STATE	PROJECT	SHEET NO.	TOTAL SHEETS
SE	VI	NH-66(008)	G1	193

FOR INFORMATION ONLY

Note:

1. Electrical relocation will be performed by VIWAPA and will be coordinated thru the CO.
2. ● - Indicates approximate location of utility poles to be placed by VIWAPA Electric.

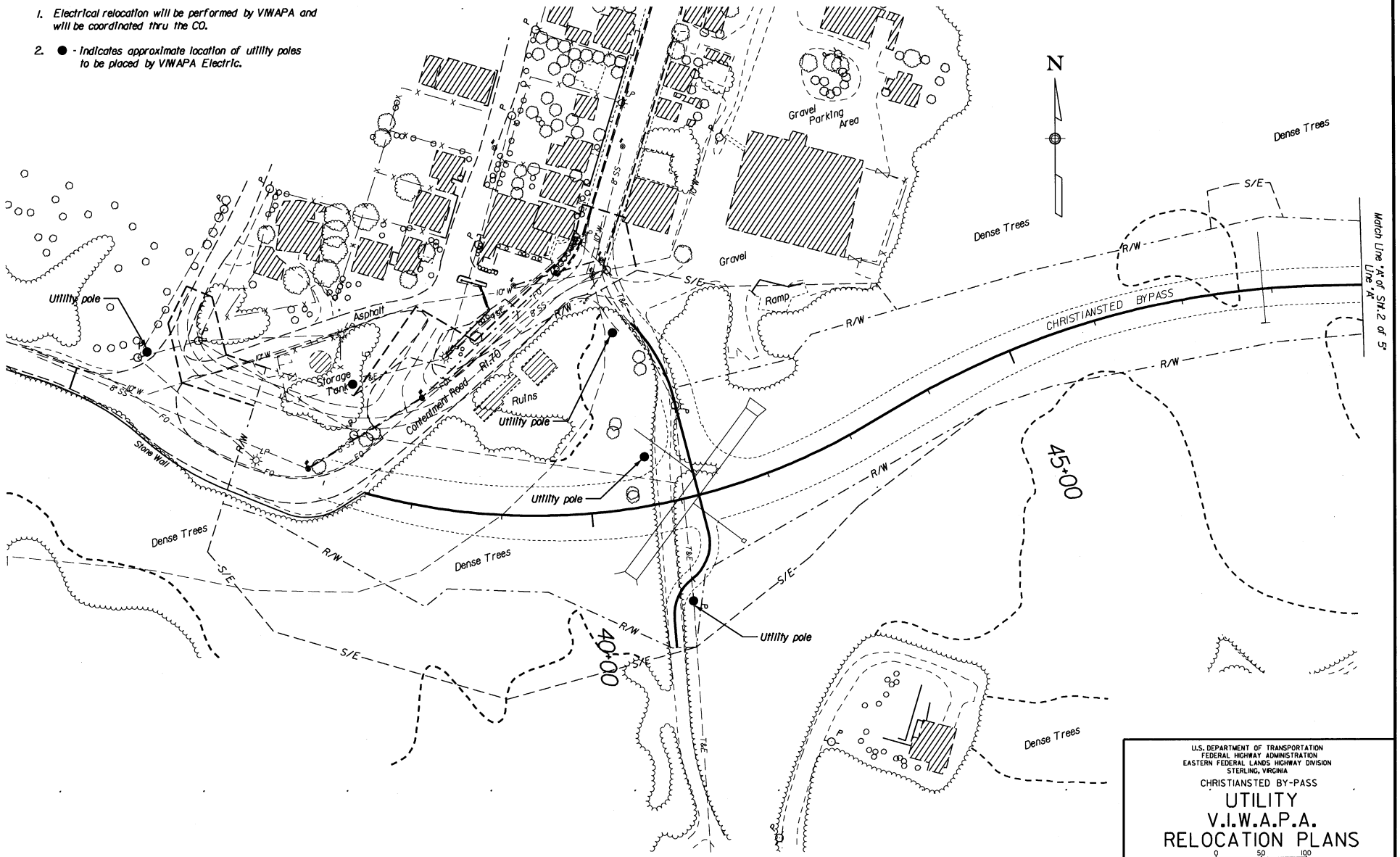

U.S. DEPARTMENT OF TRANSPORTATION
FEDERAL HIGHWAY ADMINISTRATION
EASTERN FEDERAL LANDS HIGHWAY DIVISION
STERLING, VIRGINIA

CHRISTIANSTED BY-PASS

UTILITY
V.I.W.A.P.A.
RELOCATION PLANS

0 50 100
SCALE IN FEET

Sheet 1 of 5

4/19/2007 10:18:47 AM M:\Projects\vils\st_crox\nh66(008)\proj_dev\Contract 2\utelplns.dgn

REG	STATE	PROJECT	SHEET NO.	TOTAL SHEETS
SE	VI	NH-66(008)	G2	193

● - Indicates approximate location of utility poles to be placed by VIWAPA Electric.

FOR INFORMATION ONLY

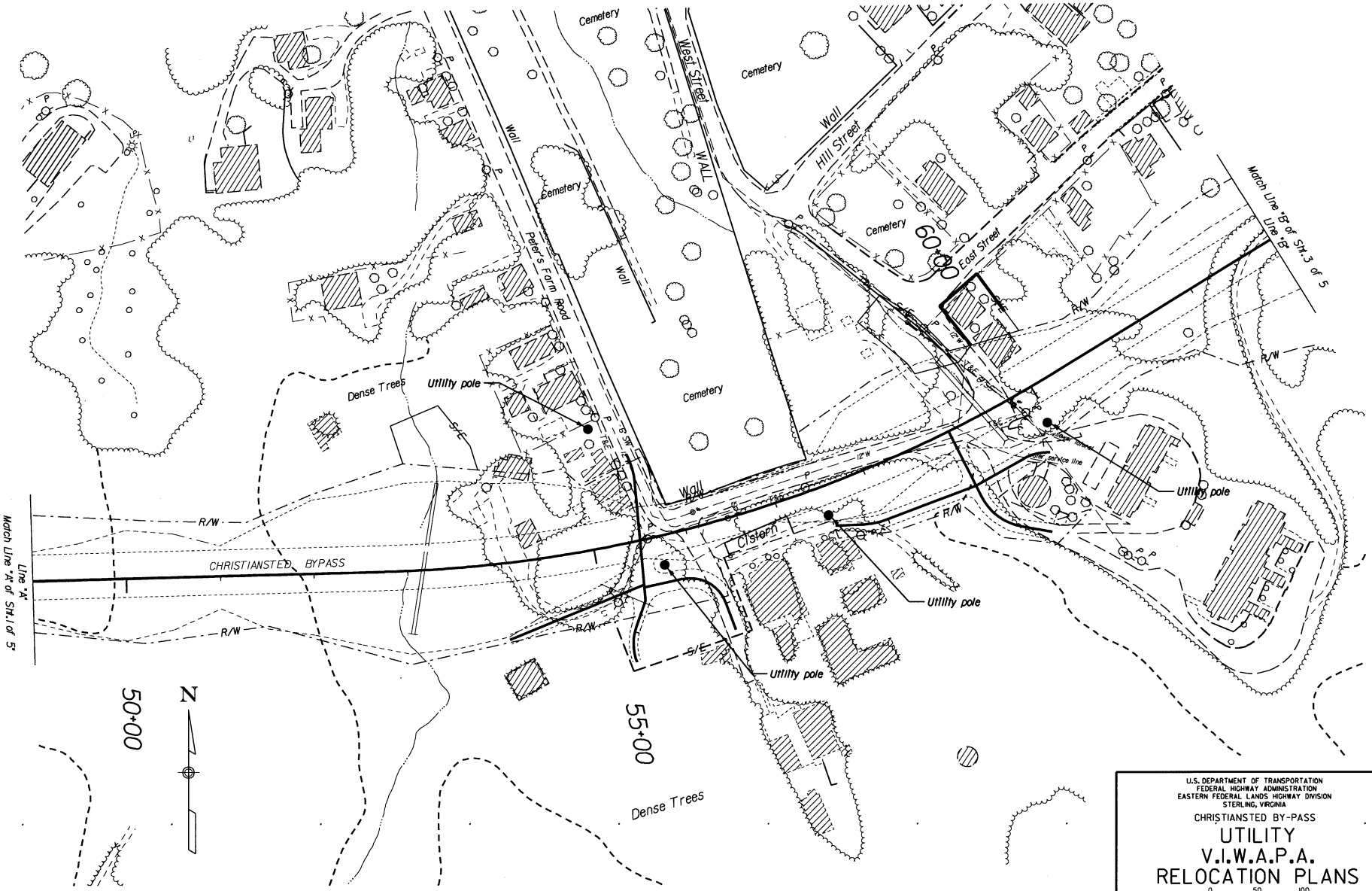

U.S. DEPARTMENT OF TRANSPORTATION
FEDERAL HIGHWAY ADMINISTRATION
EASTERN FEDERAL LANDS HIGHWAY DIVISION
STERLING, VIRGINIA

CHRISTIANSTED BY-PASS

UTILITY
V.I.W.A.P.A.
RELOCATION PLANS

0 50 100
SCALE IN FEET

Sheet 2 of 5

4/19/2007 10:18:58 AM M:\Projects\vi\st_croix\nh66(008)proj_dev\Contract 2\utelpins.dgn

REG	STATE	PROJECT	SHEET NO.	TOTAL SHEETS
SE	VI	NH-66(008)	G3	193

● - Indicates approximate location of utility poles to be placed by VIWAPA Electric.

FOR INFORMATION ONLY

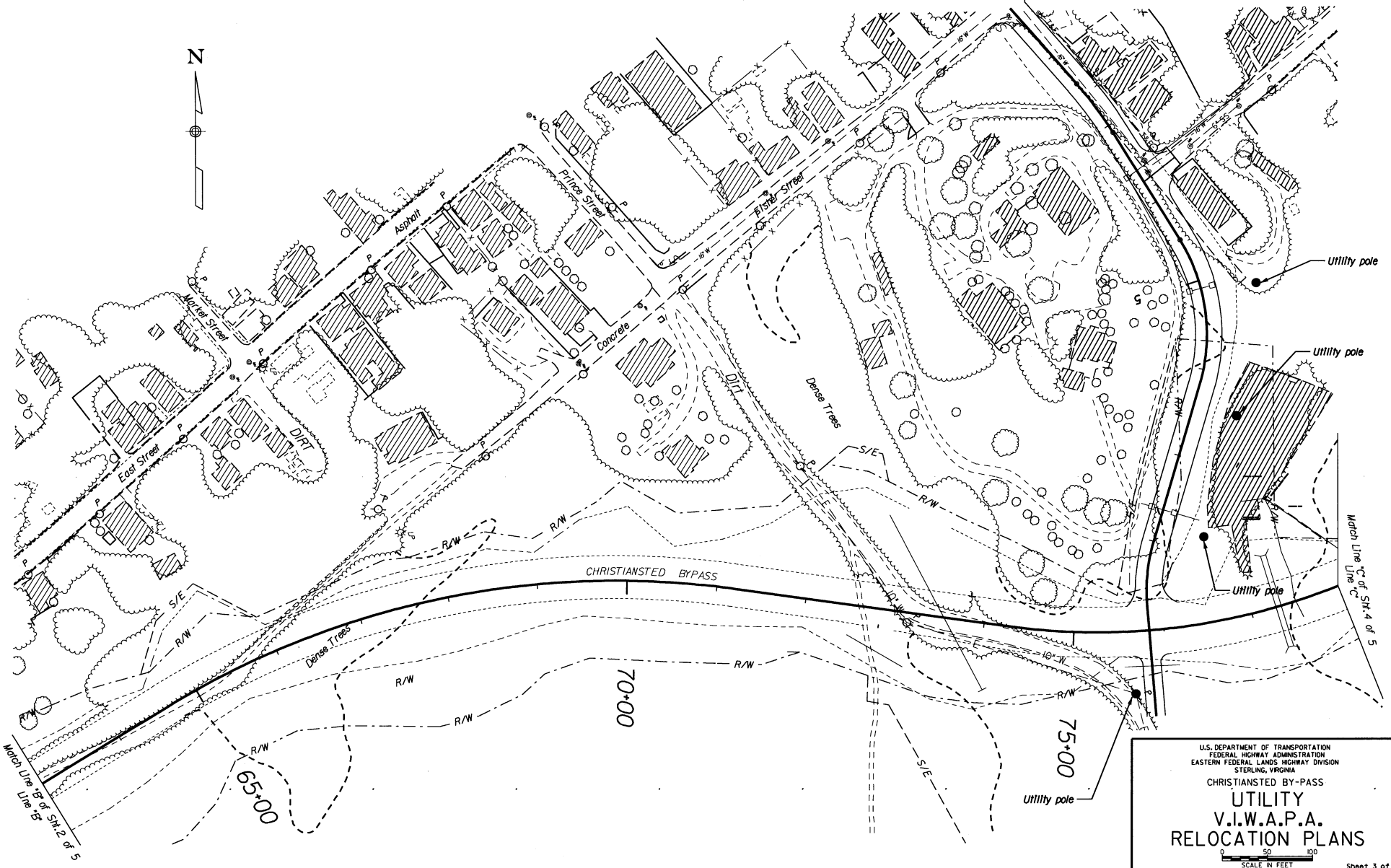

U.S. DEPARTMENT OF TRANSPORTATION
FEDERAL HIGHWAY ADMINISTRATION
EASTERN FEDERAL LANDS HIGHWAY DIVISION
STERLING, VIRGINIA

CHRISTIANSTED BY-PASS

UTILITY
V.I.W.A.P.A.
RELOCATION PLANS

0 50 100
SCALE IN FEET

Sheet 3 of 5

4/19/2007 10:19:04 AM M:\Projects\vils\st_crdx\nh66(008)proj_dev\Contract 2\utelpins.dgn

● - Indicates approximate location of utility poles to be placed by VIWAPA Electric.

FOR INFORMATION ONLY

REG	STATE	PROJECT	SHEET NO.	TOTAL SHEETS
SE	VI	NH-66(008)	G4	193

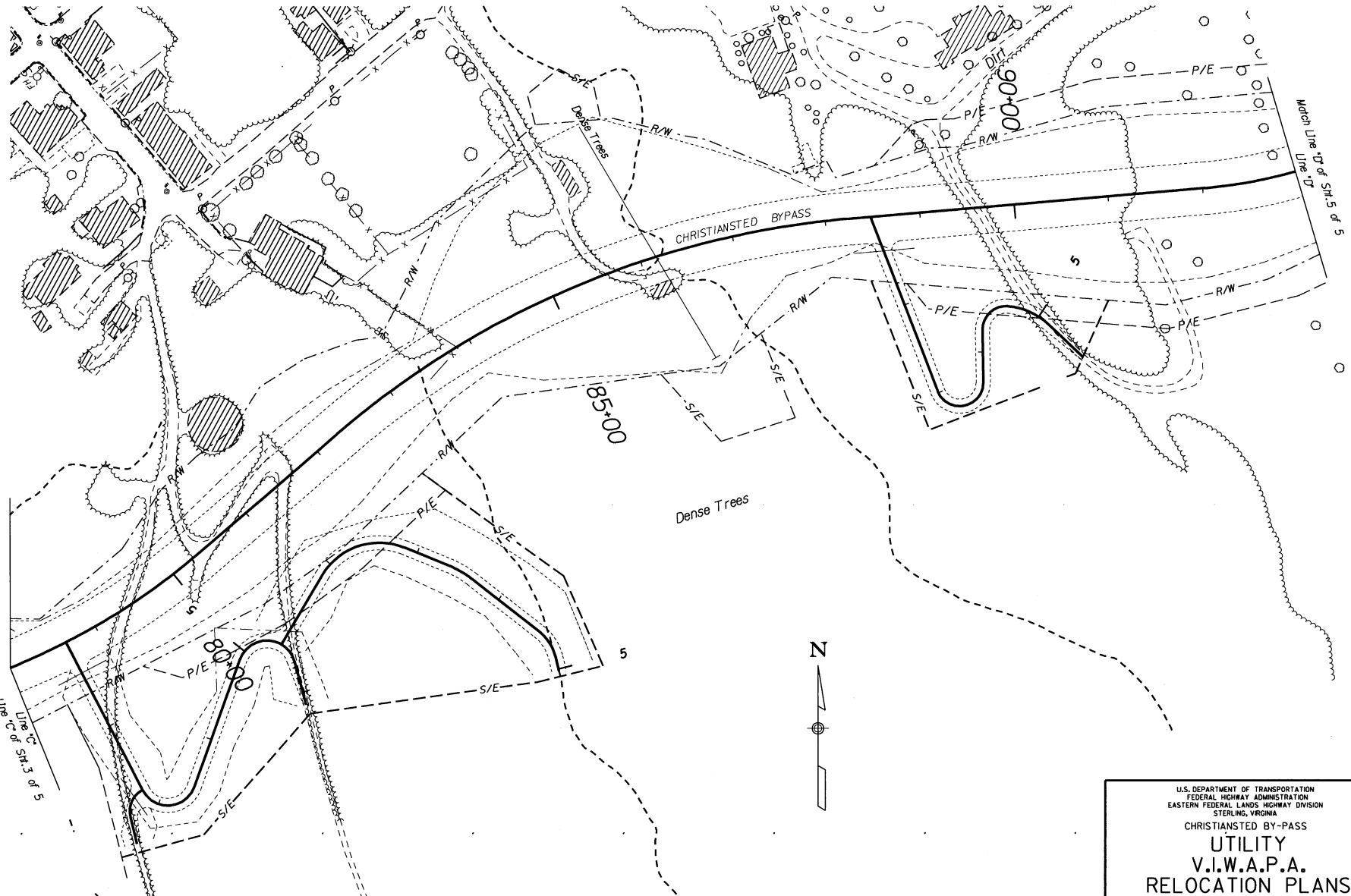

U.S. DEPARTMENT OF TRANSPORTATION
FEDERAL HIGHWAY ADMINISTRATION
EASTERN FEDERAL LANDS HIGHWAY DIVISION
STERLING, VIRGINIA

CHRISTIANSTED BY-PASS

UTILITY
V.I.W.A.P.A.
RELOCATION PLANS

0 50 100
SCALE IN FEET

Sheet 4 of 5

4/19/2007 10:19:11 AM M:\Projects\vils\st_crot\nh66(008)proj_dev\Contract 2\utelpins.dgn

REG	STATE	PROJECT	SHEET NO.	TOTAL SHEETS
SE	VI	NH-66(008)	G5	193

● - Indicates approximate location of utility poles to be placed by VIWAPA Electric.

FOR INFORMATION ONLY

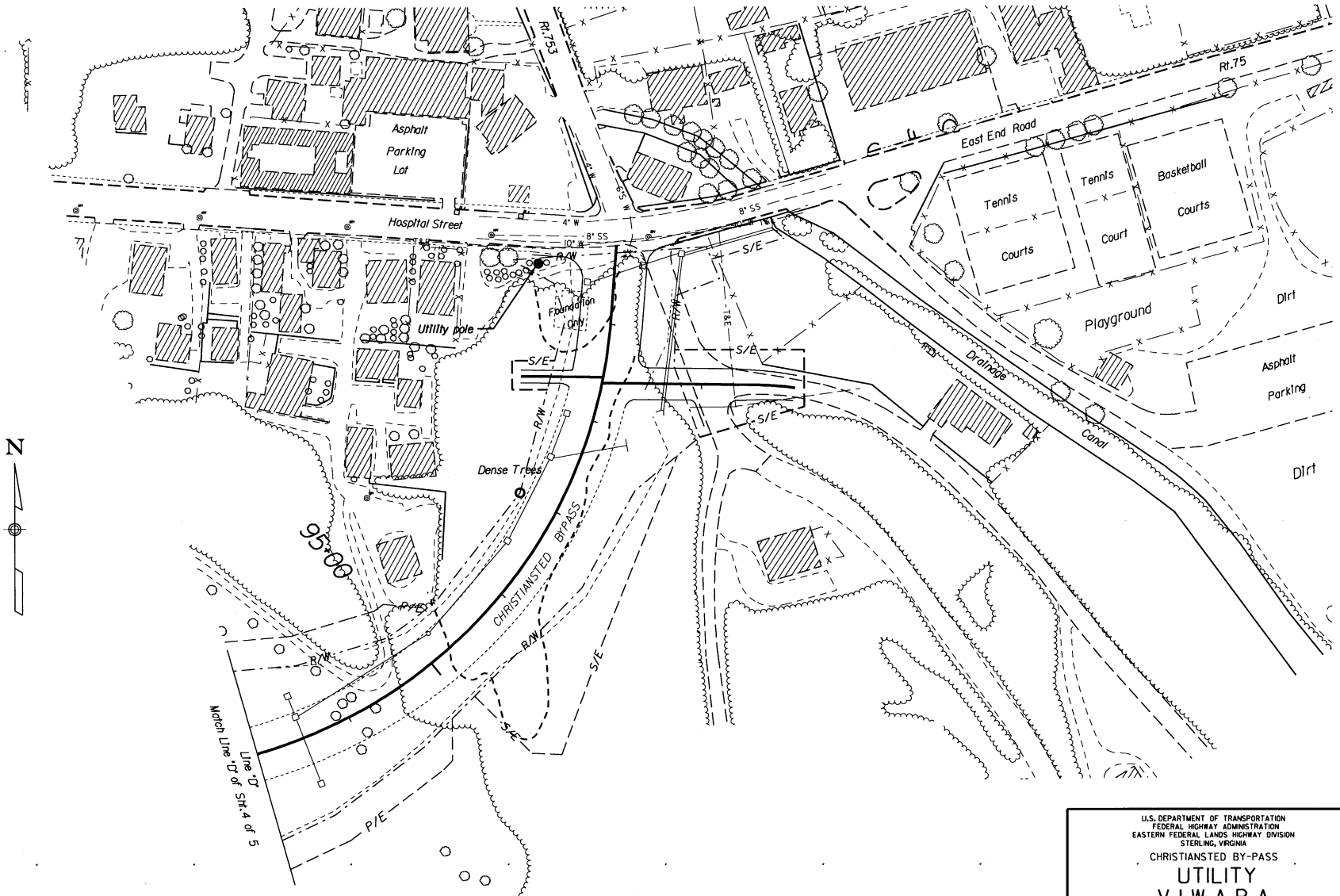

U.S. DEPARTMENT OF TRANSPORTATION
FEDERAL HIGHWAY ADMINISTRATION
EASTERN FEDERAL LANDS HIGHWAY DIVISION
STERLING, VIRGINIA

CHRISTIANSTED BY-PASS

UTILITY
V.I.W.A.P.A.
RELOCATION PLANS

0 50 100
SCALE IN FEET

Sheet 5 of 5

4/19/2007 10:19:17 AM M:\Projects\vi\st_croix\nh66(008)proj_dev\Contract 2\utelplns.dgn

REG	STATE	PROJECT	SHEET NO.	TOTAL SHEETS
SE	VI	NH-66(008)	G6	193

FOR INFORMATION ONLY

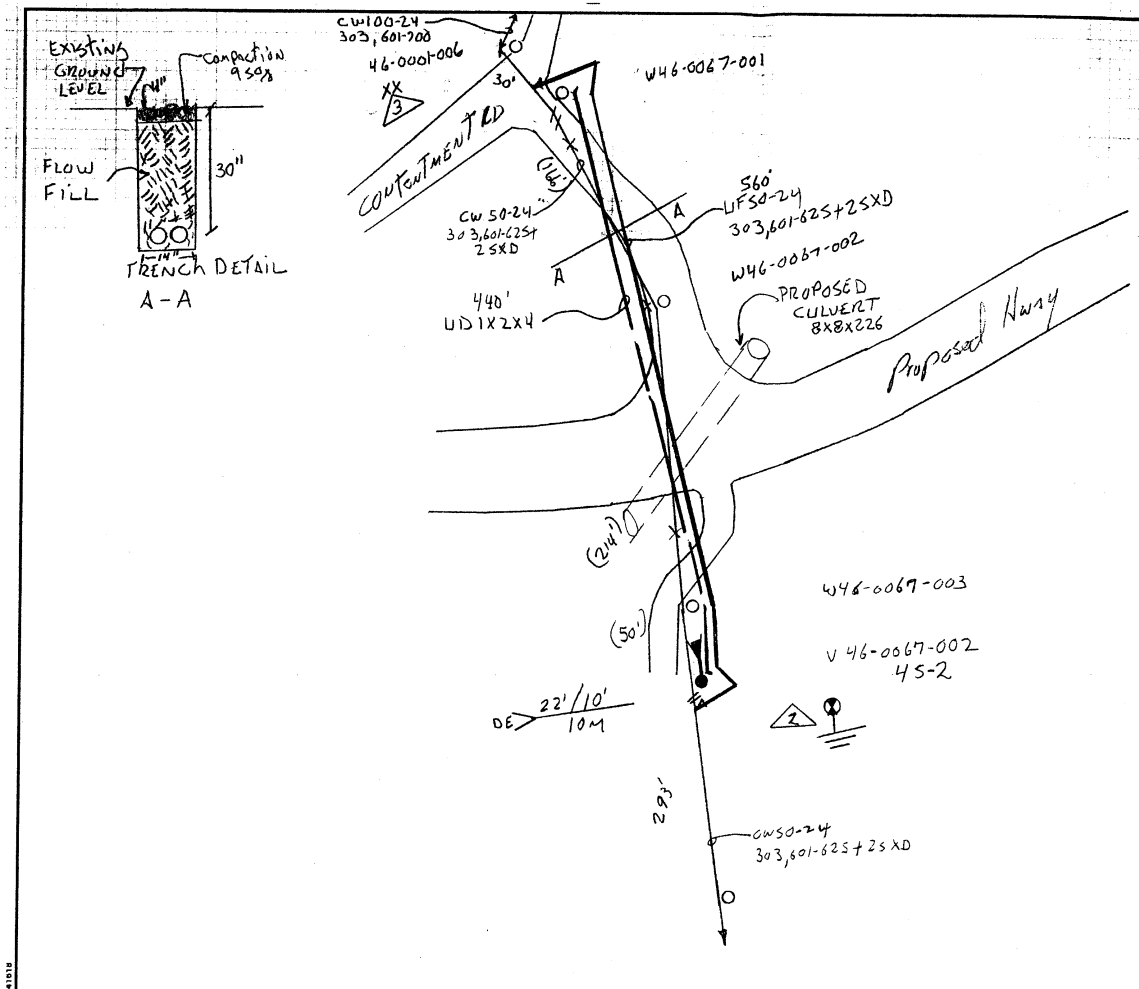

LOCATION / REA UNITS	46-0067-001	46-0067-002	46-0067-003				THIS SHEET TOTAL
UD1X2X4	460						460
UF50-24	560						560
HAF	1	1					2
HC1A	50	50					100
BFC SLURRY	440						440
45-2		1					1
PM2	1	1					2
PM2A	1	1					2
PF1-7		1					1
PE1-3		1					1
PM11		1					1
PM52		1					1
BM82	1	1					2
XXSTD 10M	166	214	50				430
XXCW50-24	166	214	50				430
XXHC1A	50	50					100

NORTH

MAP 46K GRID

Revised 6-21-04

ISSUE	DATE

VIRGIN ISLANDS TELEPHONE CORPORATION

Relocate Aerial with Underground Cisted by Pass

WO 31908-04

DATE:	ENG: AFK	APPROVED:
DRAWN:	SCALE: Ø	SHEET 1 OF 3

Note:

1. Telephone relocation will be performed by Innovative - Telephone personnel and will be coordinated thru the CO.

U.S. DEPARTMENT OF TRANSPORTATION
FEDERAL HIGHWAY ADMINISTRATION
EASTERN FEDERAL LANDS HIGHWAY DIVISION
STERLING, VIRGINIA

CHRISTIANSTED BY-PASS

UTILITY INNOVATIVE - TELEPHONE RELOCATION PLANS

Sheet 1 of 3

4/19/2007 11:21:42 AM M:\Projects\vi\ls\st_crox\nh66(008)proj_dev\Contract 2\utelplns.dgn

REG	STATE	PROJECT	SHEET NO.	TOTAL SHEETS
SE	VI	NH-66(008)	G7	193

FOR INFORMATION ONLY

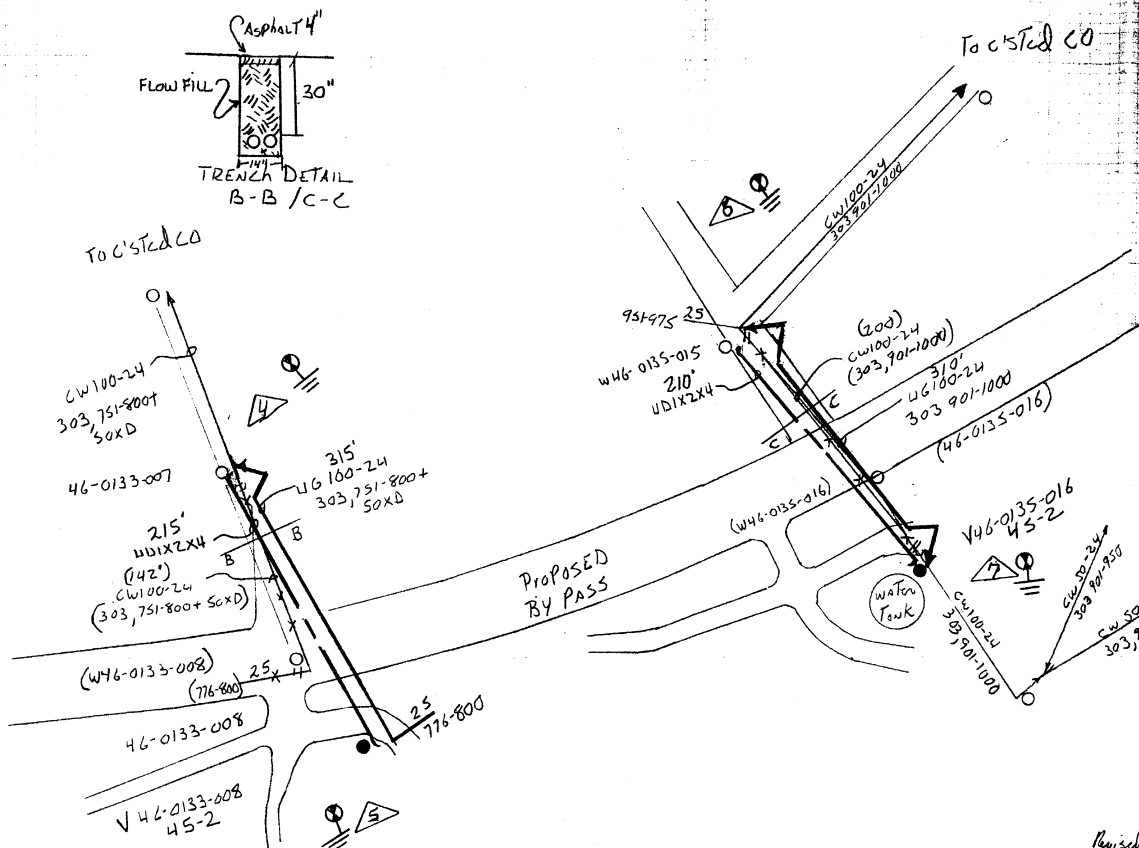

LOCATION / REA UNITS	46-0133-007	46-0133-008	46-0135-015	46-0135-016			THIS SHEET TOTAL
UDIX2X4	225		230				455
UF100-24	315		410				725
PG3-25		1					1
HAF	1	1	1	1			4
HC-1A	100	25	100	100			325
HCUT		1					1
BFC-SLURP	225		230				455'
BM72	60		80				140'
4S-2		1		1			2
PM2	1	1	1	1			4
PM2A	1	1	1	1			4
PM32		1		1			2
XXPG3-25		1					1
XXSTD10M	142		200				342
XXCW100-24	142		200				342
BM82	1	1	1	1			4

MAP 46L GRID

Revised 06-21-04

VIRGIN ISLANDS TELEPHONE CORPORATION

ISSUE	DATE

RELOCATE AERIAL CABLES WITH UNDERGROUND AT C'STED BY PASS WO 31908-04

DATE:	ENG: AFR	APPROVED:
DRAWN:	SCALE: Ø	SHEET 2 OF 3

541618

Note:

1. Telephone relocation will be performed by Innovative - Telephone personnel and will be coordinated thru the CO.

U.S. DEPARTMENT OF TRANSPORTATION
FEDERAL HIGHWAY ADMINISTRATION
EASTERN FEDERAL LANDS HIGHWAY DIVISION
STERLING, VIRGINIA

CHRISTIANSTED BY-PASS

UTILITY
INNOVATIVE - TELEPHONE RELOCATION PLANS

Sheet 2 of 3

4/19/2007 11:21:52 AM M:\Projects\ltsst_proj\nh66(008)proj1_dev\Contract 2\utilplns.dgn

REG	STATE	PROJECT	SHEET NO.	TOTAL SHEETS
SE	VI	NH-66(008)	G8	193

FOR INFORMATION ONLY

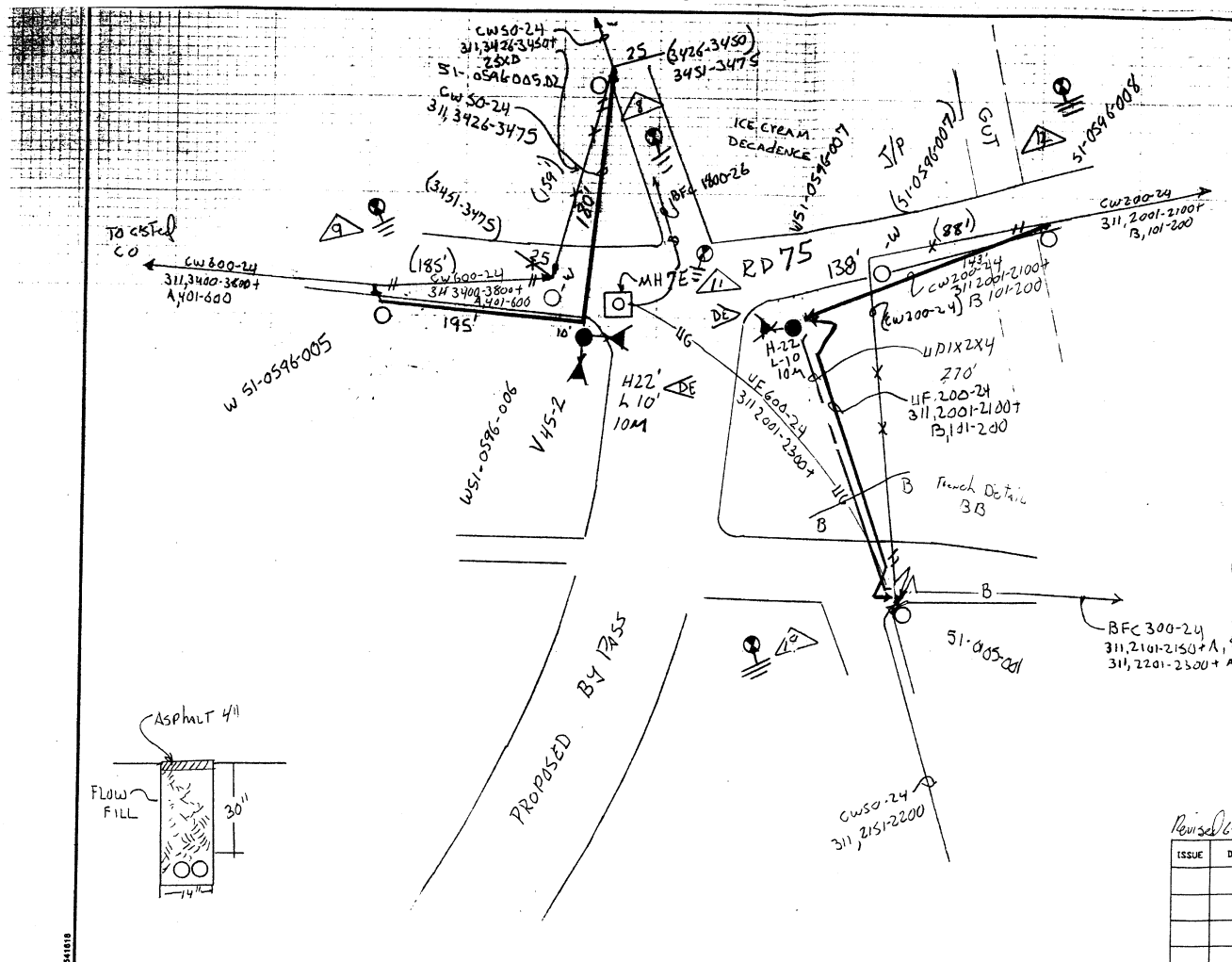

LOCATION / REA UNITS	51-0596-005	51-0596-006	51-0596-005.02	51-0105-001	51-0596-007	51-0596-008	THIS SHEET TOTAL
CW50-24	200	180					380
STD10M	200	180		143			523
CW200-24				143			143
HC1A	50		475	200	200	200	725
HAF	1		1	1	1		5
HCV	50			200			250
45-2		1			1		2
PM2	1		1	1	1	1	5
PM2A	1		1	1	1	1	5
PM11	1	2			1		4
PF1-7	1	2			1		4
PF1-3	1	2			1		4
XX CW600-24	185						185
XX CW50-24		159					159
XX CW200-24				165	88		253
PMS2-1		1			1		2
XX W40-4		1					1
UF200-24				270			270
UDIX2X4				165			165'
BFC SLURRY				165			165'
XX STD10M	185	159		165	88		597
XX P63-25		1					1
BM72				30			30

MAP 51E GRID

Revised 6-21-04

ISSUE	DATE

VIRGIN ISLANDS TELEPHONE CORPORATION

RELOCATE AERIAL CABLES with underground C'Sted by Pass

WO 31908-04

DATE:	ENG: AFR	APPROVED:
DRAWN:	SCALE: Ø	SHEET 3 OF 3

U.S. DEPARTMENT OF TRANSPORTATION
FEDERAL HIGHWAY ADMINISTRATION
EASTERN FEDERAL LANDS HIGHWAY DIVISION
STERLING, VIRGINIA

CHRISTIANSTED BY-PASS

UTILITY
INNOVATIVE - TELEPHONE RELOCATION PLANS

Sheet 3 of 3

Note:

1. Telephone relocation will be performed by Innovative - Telephone personnel and will be coordinated thru the CO.

4/19/2007 11:22:02 AM M:\Projects\Wlsst_proj\nh66(008)pro_dgn\Contract 2\utilplns.dgn

REG	STATE	PROJECT	SHEET NO.	TOTAL SHEETS
SE	VI	NH-66(008)	G9	193

FOR INFORMATION ONLY

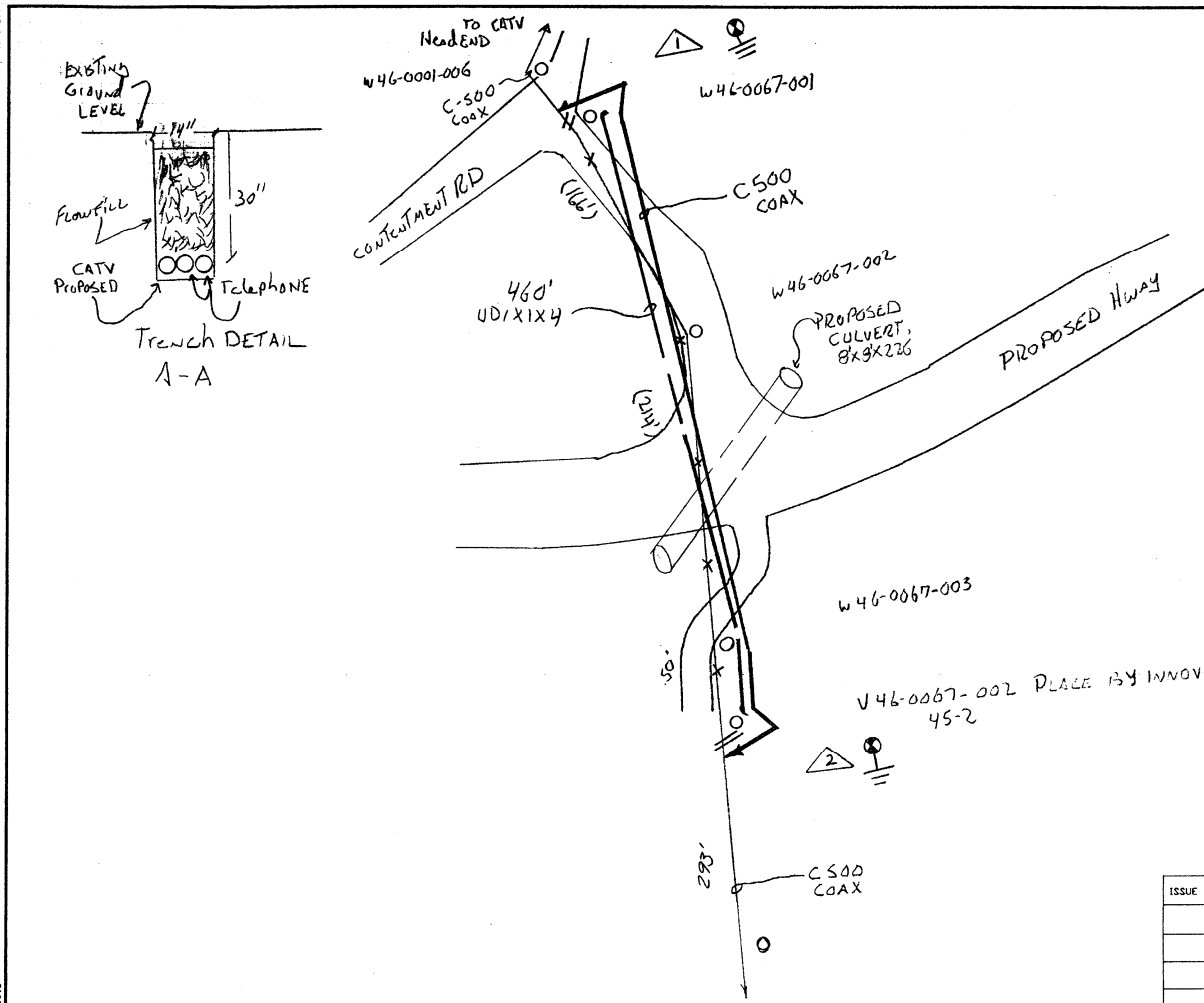

LOCATION / REA UNITS	46-0067-001	46-0067-002	46-0067-003				THIS SHEET TOTAL
U500	560						560
UD1X1X4	460						460
HC-1A	1	1					2
PM2	1	1					2
XXC500	430						430
BFCSLURY	460						460
BM83	1		1				2

MAP 46K GRID

VIRGIN ISLANDS TELEPHONE CORPORATION

ISSUE	DATE

RELOCATE AERIAL CATV WITH UNDERGROUND C'STED BY PASS

CA 219-04

DATE:	ENG: AFR	APPROVED:
DRAWN:	SCALE:	SHEET 1 OF 3

541618

Note:

1. Cable relocation will be performed by Innovative - Cable personnel and will be coordinated thru the CO.

U.S. DEPARTMENT OF TRANSPORTATION
FEDERAL HIGHWAY ADMINISTRATION
EASTERN FEDERAL LANDS HIGHWAY DIVISION
STERLING, VIRGINIA

CHRISTIANSTED BY-PASS

UTILITY INNOVATIVE - CABLE RELOCATION PLANS

Sheet 1 of 3

4/19/2007 11:22:12 AM M:\Projects\vlis\st_proj\nh66(008)proj_dev\Contract 2\utilplns.dgn

FOR INFORMATION ONLY

REG	STATE	PROJECT	SHEET NO.	TOTAL SHEETS
SE	VI	NH-66(008)	G10	193

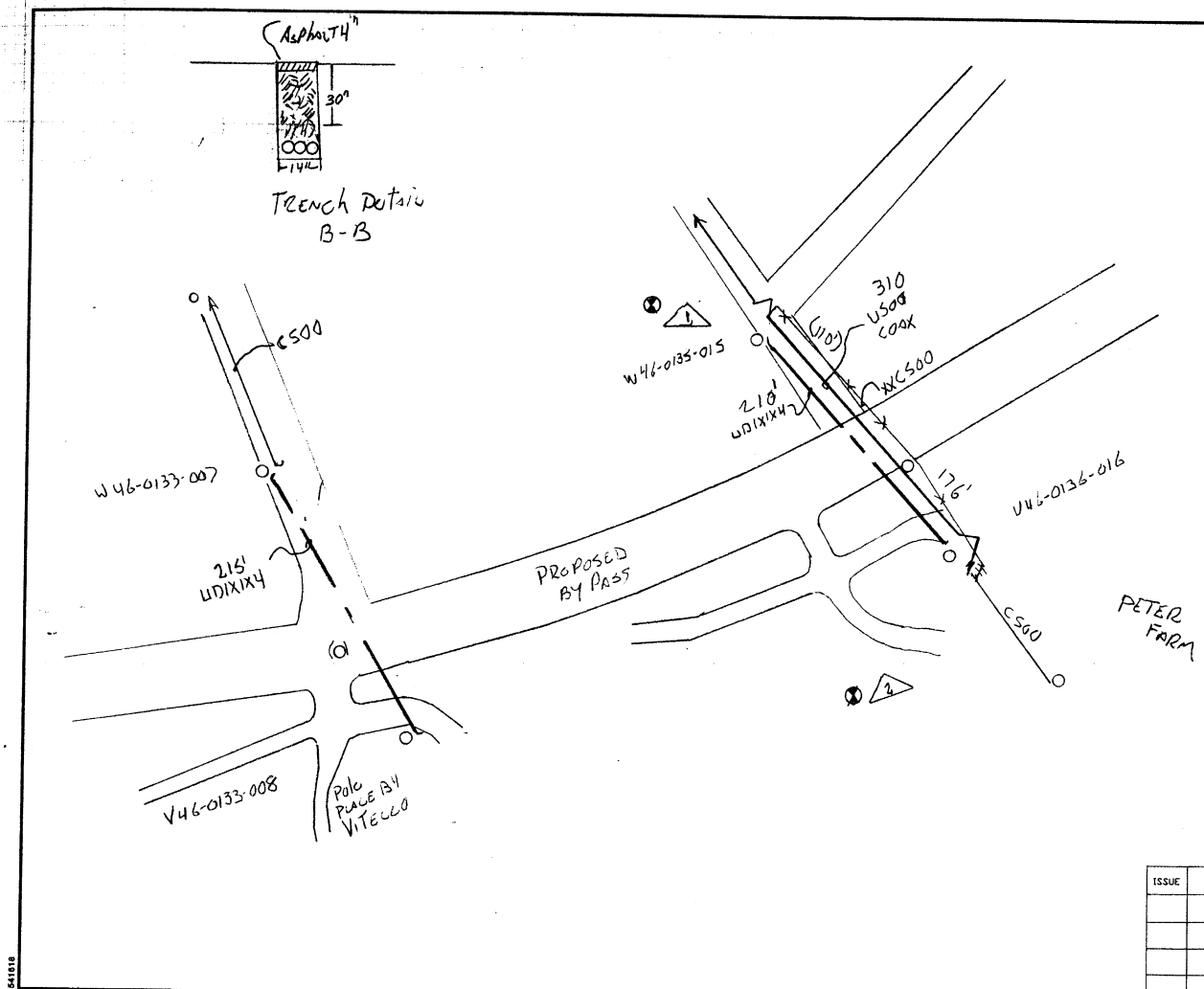

LOCATION / REA UNITS	W46-0133-007	W46-0133-008	W46-0135-015	W46-0135-016			THIS SHEET TOTAL
UDIX1X4	215	210					425
U500	-	310					310
HC1A		1	1				2
PM2			1				1
BFSLUR4	215	210					425
PM2A		1	1				2
XXC500		110	176				286
BU83	1	1	1	1			4

MAP 46C GRID

VIRGIN ISLANDS TELEPHONE CORPORATION

ISSUE	DATE

Relocate Aerial CATV with Underground C'STLD By Pass
CA 219 04

DATE:	ENG: LFR	APPROVED:
DRAWN:	SCALE: Ø	SHEET 2 OF 3

Note:

1. Cable relocation will be performed by Innovative - Cable personnel and will be coordinated thru the CO.

U.S. DEPARTMENT OF TRANSPORTATION
FEDERAL HIGHWAY ADMINISTRATION
EASTERN FEDERAL LANDS HIGHWAY DIVISION
STERLING, VIRGINIA

CHRISTIANSTED BY-PASS

UTILITY INNOVATIVE - CABLE RELOCATION PLANS

Sheet 2 of 3

541618

4/19/2007 11:22:20 AM M:\Projects\fl\st_cr\nh\66(008)\proj_dev\Contract 2\utilplns.dgn

REG	STATE	PROJECT	SHEET NO.	TOTAL SHEETS
SE	VI	NH-66(008)	G11	193

FOR INFORMATION ONLY

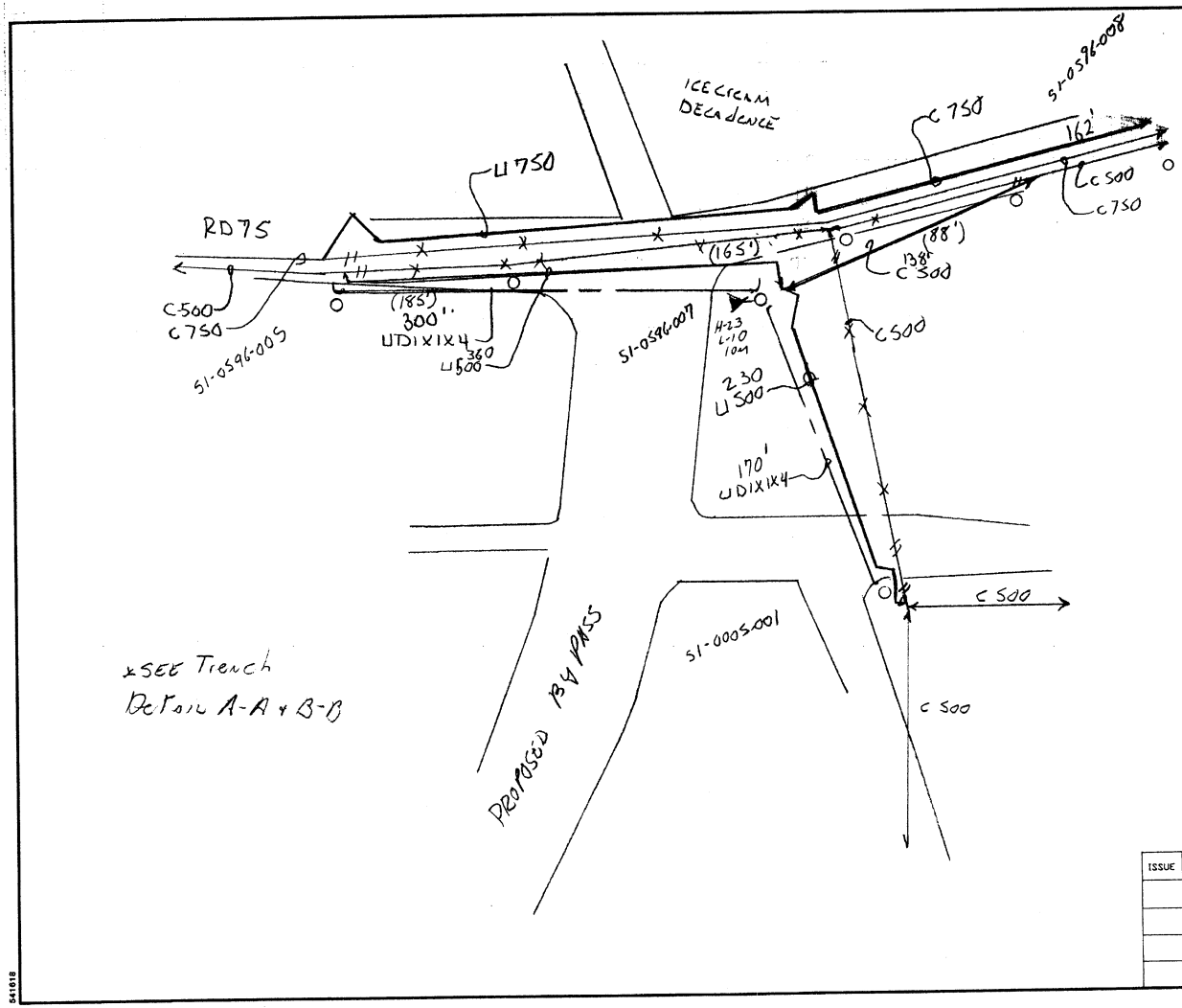

LOCATION / REA UNITS	51-0591-005	51-0596-007	51-0596-008	51-0005-001	51-0596-009		THIS SHEET TOTAL
U750	360						360
U500		590					590
C750		300					300
UD1X1X4	300	170					470
SPLITER		1					1
PF1-7		1					1
PE1-3		1					1
PM11		1					1
STD 10M		300					300
HC1A	2	1		1	1		5
PM2	1	1		1	1		4
BM83	1	1		1			3
xx C750	185	165	162				512
xx C500	185	165					350

MAP 51E GRID

VIRGIN ISLANDS TELEPHONE CORPORATION

ISSUE	DATE

RELOCATE AERIAL CATV WITH Underground Cisted By Pass
CA 219-04

DATE:	ENG: AFR	APPROVED:
DRAWN:	SCALE: Ø	SHEET 3 OF 3

541618

Note:

1. Cable relocation will be performed by Innovative - Cable personnel and will be coordinated thru the CO.

U.S. DEPARTMENT OF TRANSPORTATION
FEDERAL HIGHWAY ADMINISTRATION
EASTERN FEDERAL LANDS HIGHWAY DIVISION
STERLING, VIRGINIA

CHRISTIANSTED BY-PASS

UTILITY INNOVATIVE - CABLE RELOCATION PLANS

Sheet 3 of

4/19/2007 11:22:33 AM M:\Projects\vi\st_crox\nh66(008)proj_dev\Contract 2\utilplns.dgn

REG	STATE	PROJECT	SHEET NO.	TOTAL SHEETS
SE	VI	NH-66(008)	G12	193

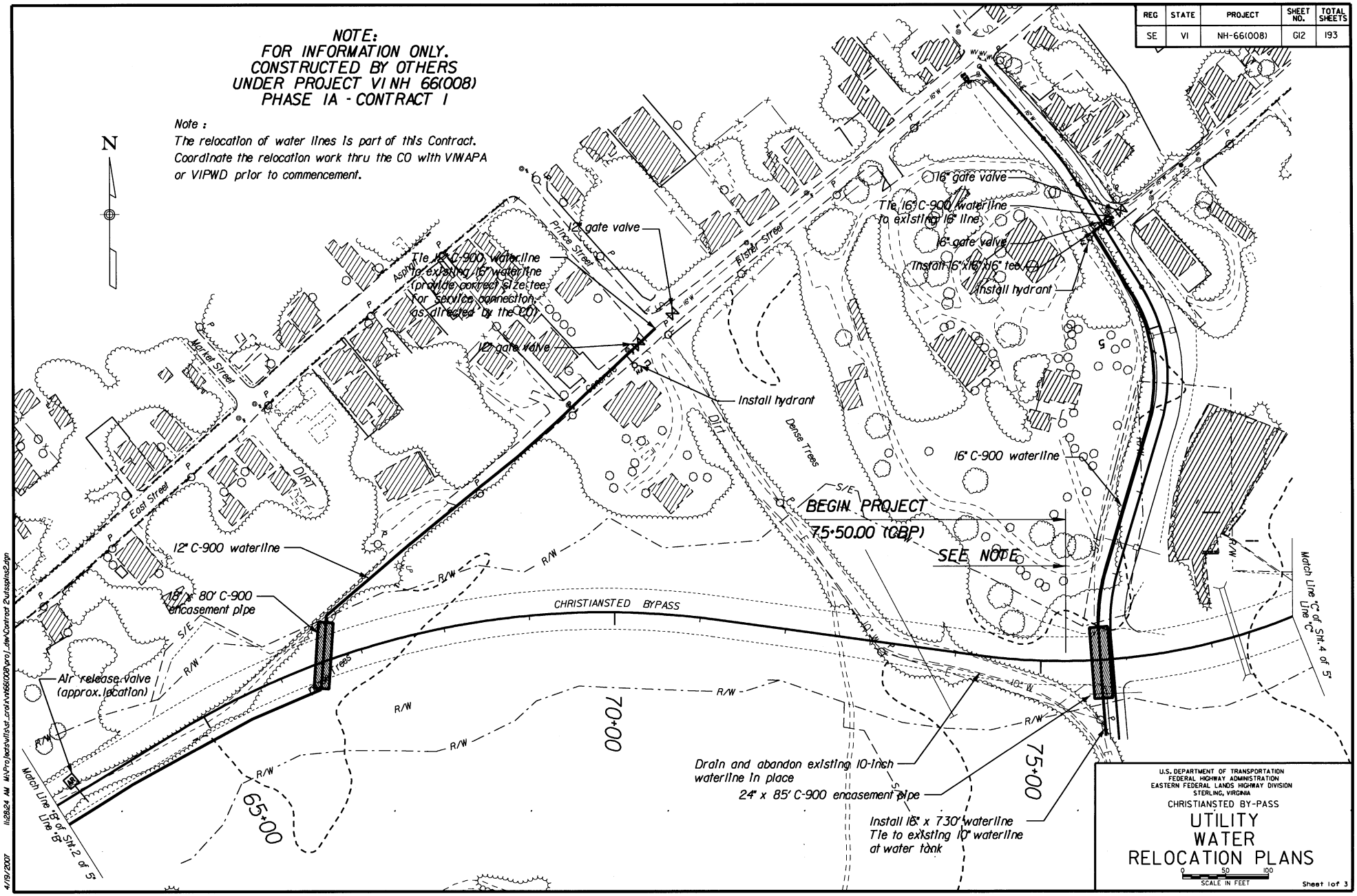

4/19/2007 11:28:24 AM M:\Projects\vi\st_croix\nh66(008)proj_dev\Contract 2\utsspins2.dgn

REG	STATE	PROJECT	SHEET NO.	TOTAL SHEETS
SE	VI	NH-66(008)	G13	193

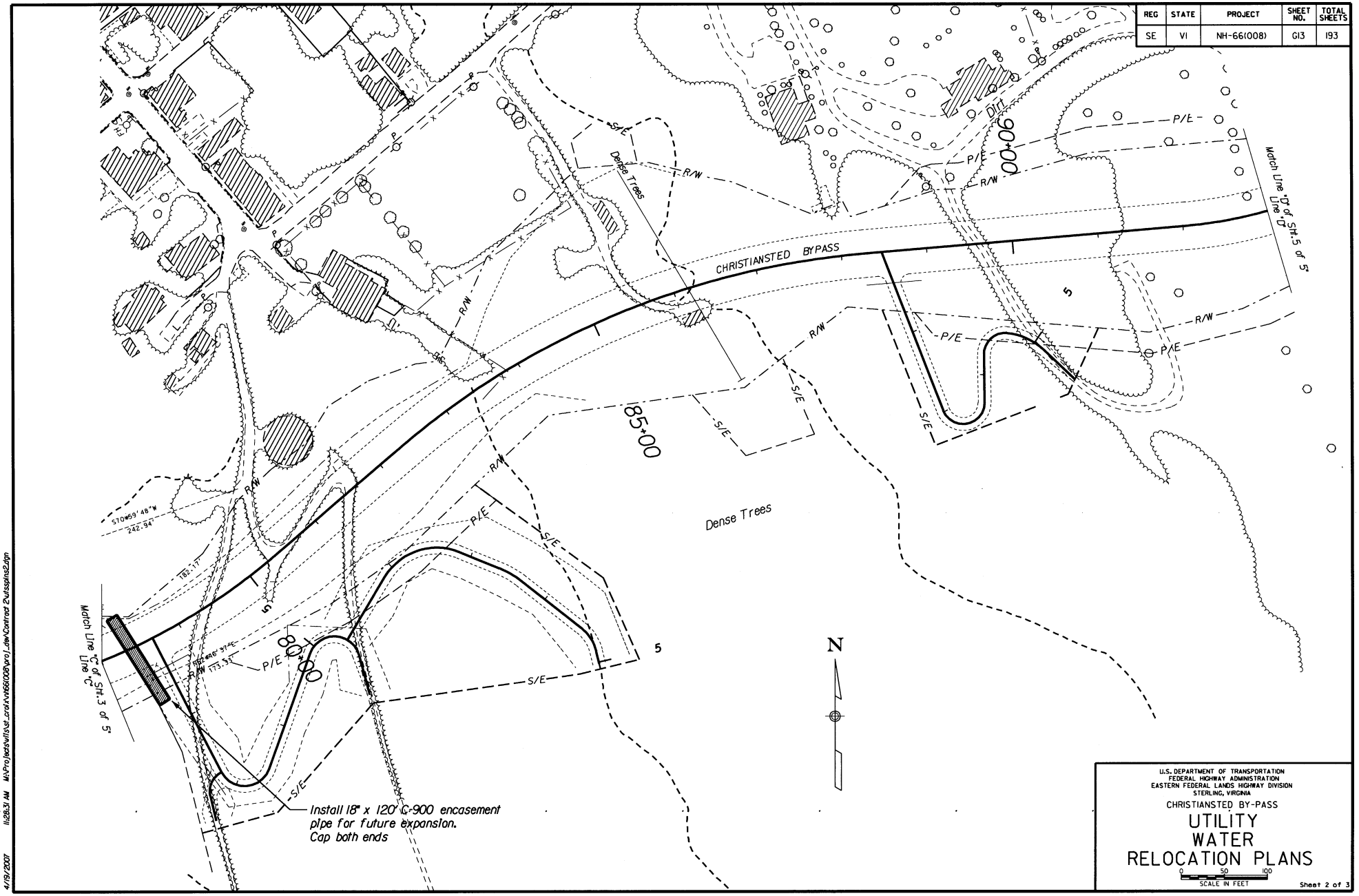

U.S. DEPARTMENT OF TRANSPORTATION
FEDERAL HIGHWAY ADMINISTRATION
EASTERN FEDERAL LANDS HIGHWAY DIVISION
STERLING, VIRGINIA

CHRISTIANSTED BY-PASS

UTILITY WATER RELOCATION PLANS

0 50 100
SCALE IN FEET

Sheet 2 of 3

4/19/2007 11:28:31 AM M:\Projects\vi1s\st_croix\nh66(008)\proj_dev\Contract 2\utsspins2.dgn

REG	STATE	PROJECT	SHEET NO.	TOTAL SHEETS
SE	VI	NH-66(008)	G14	193

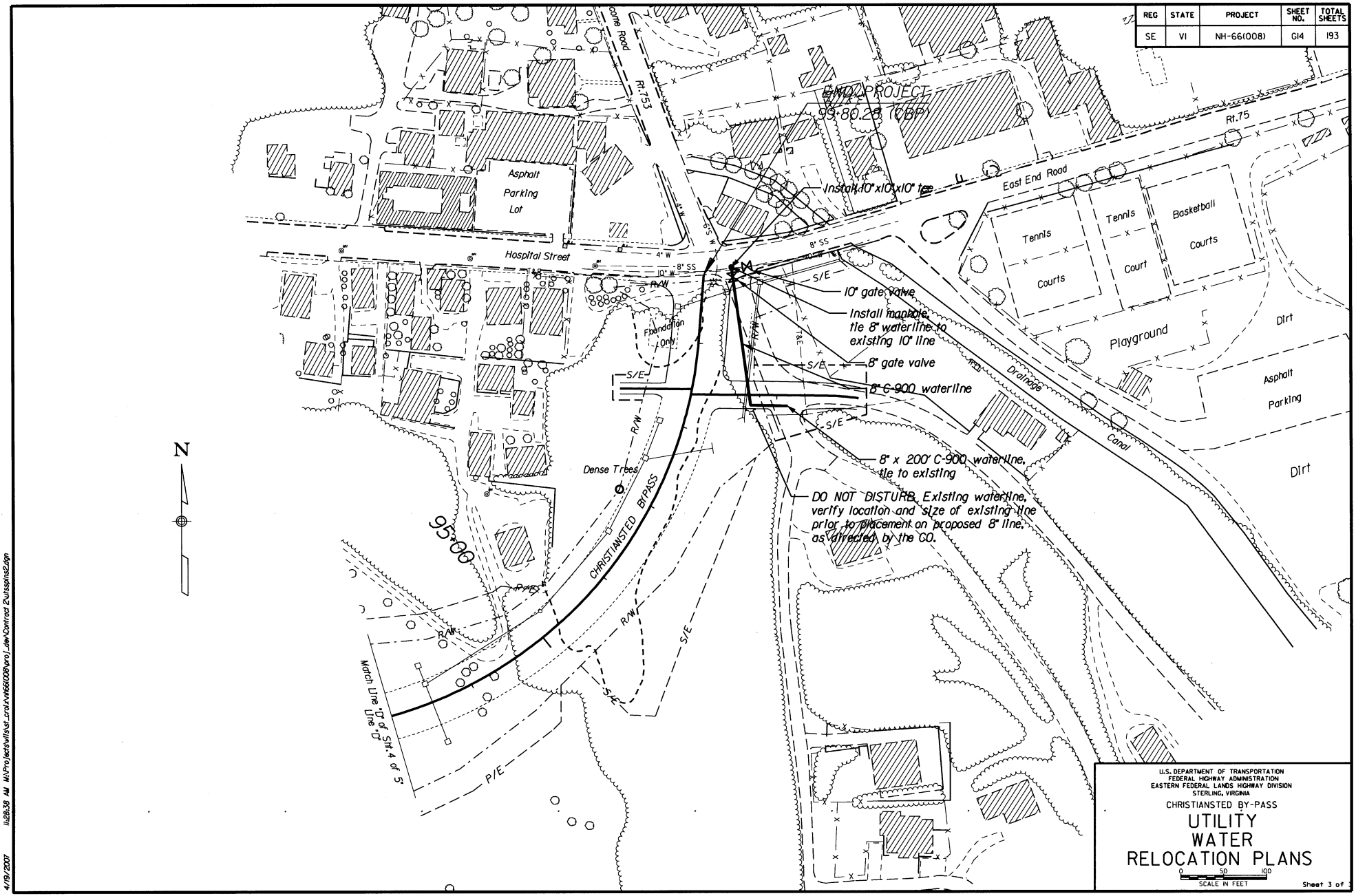

U.S. DEPARTMENT OF TRANSPORTATION
FEDERAL HIGHWAY ADMINISTRATION
EASTERN FEDERAL LANDS HIGHWAY DIVISION
STERLING, VIRGINIA

CHRISTIANSTED BY-PASS

UTILITY WATER RELOCATION PLANS

0 50 100
SCALE IN FEET

Sheet 3 of

4/19/2007 11:28:38 AM M:\Projects\vlis\st_crolx\nh66(008)\proj_dev\Contract 2\utsspins2.dgn

REG	STATE	PROJECT	SHEET NO.	TOTAL SHEETS
SE	VI	NH-66(008)	G15	193

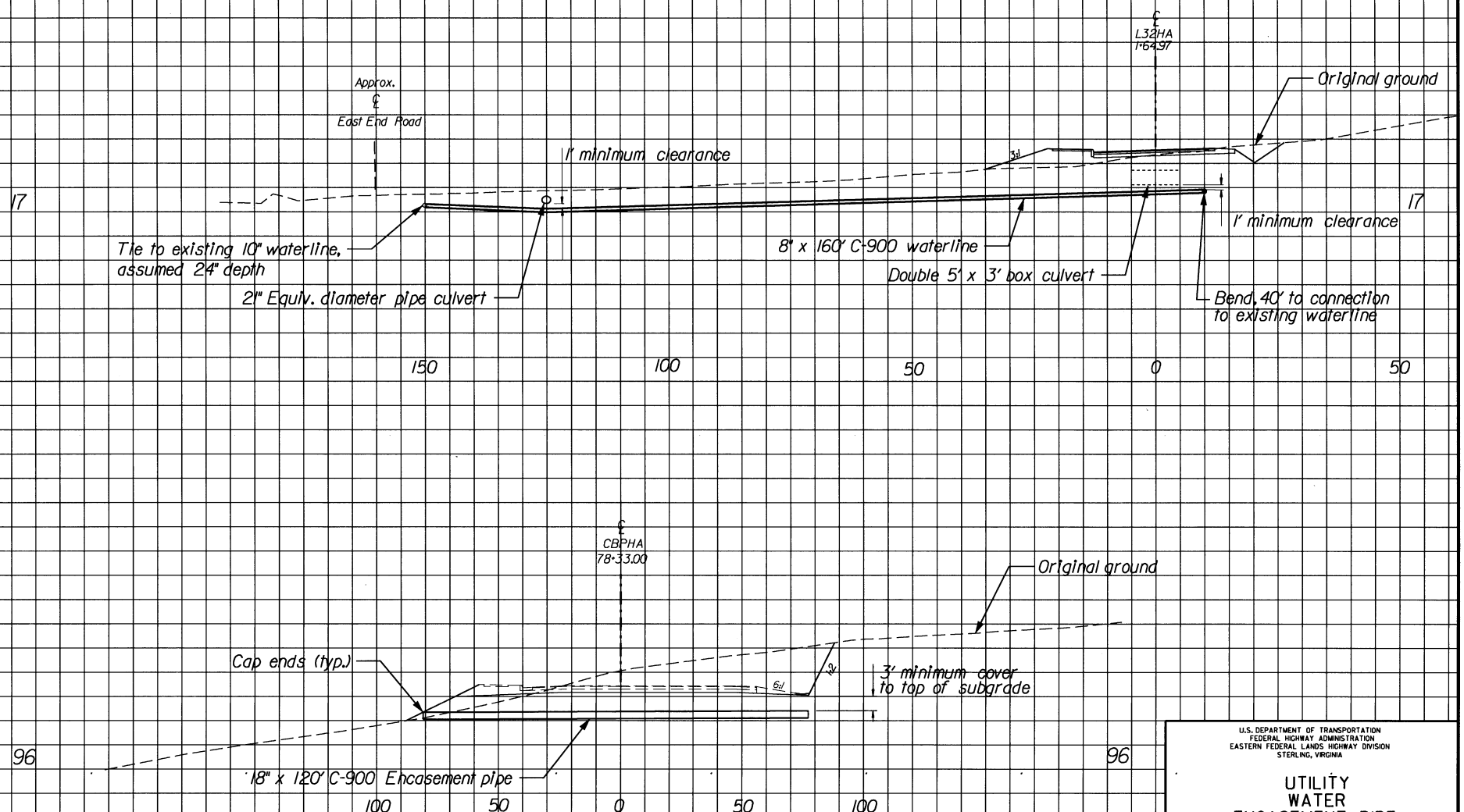

U.S. DEPARTMENT OF TRANSPORTATION
FEDERAL HIGHWAY ADMINISTRATION
EASTERN FEDERAL LANDS HIGHWAY DIVISION
STERLING, VIRGINIA

UTILITY
WATER
ENCASEMENT PIPE
CROSS SECTION

4/19/2007 11:28:50 AM M:\Projects\vlis\st_proj\nh66(008)proj_dev\Contract 2\utsspins2.dgn

REG	STATE	PROJECT	SHEET NO.	TOTAL SHEETS
SE	VI	NH-66(008)	G16	193

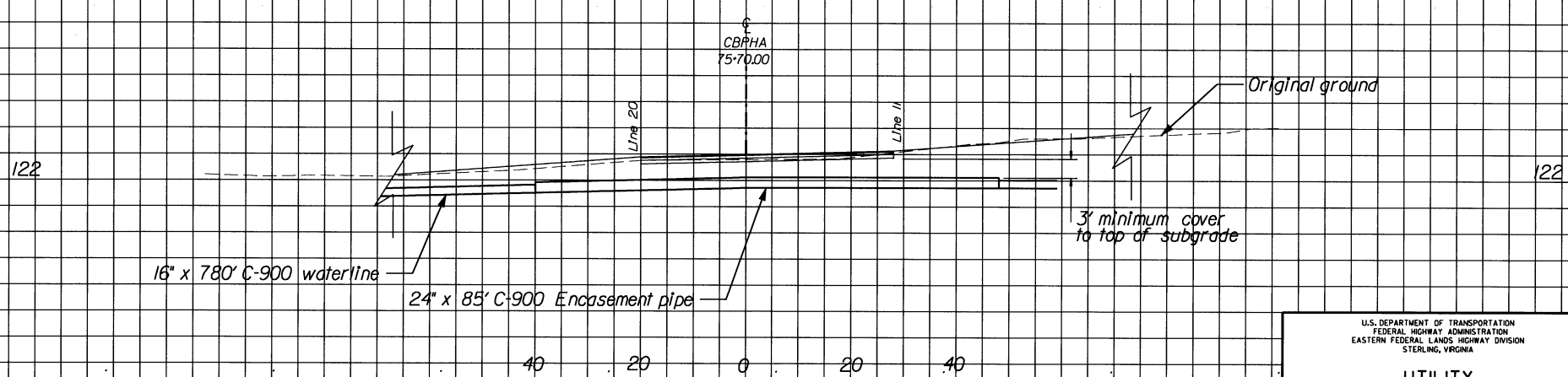

U.S. DEPARTMENT OF TRANSPORTATION
FEDERAL HIGHWAY ADMINISTRATION
EASTERN FEDERAL LANDS HIGHWAY DIVISION
STERLING, VIRGINIA

UTILITY
WATER
ENCASEMENT PIPE
CROSS SECTION

4/19/2007 11:29:06 AM M:\Projects\vils\st_proix\nh66(008)proj_dev\Contract 2\utsspins2.dgn

REG	STATE	PROJECT	SHEET NO.	TOTAL SHEETS
SE	VI	NH 66 (008)	H1	193

LEGEND

TITLE	KEY	SYMBOL
CONSTRUCTION ENTRANCE	CE	
SILT FENCE	SF	X——X—
STREAM DIVERSION	SD	
INLET PROTECTION	IP	
DIVERSION BERM	DB	
OUTLET PROTECTION	OP	
TEMPORARY SLOPE DRAIN	TSD	

TITLE	KEY	SYMBOL
TEMPORARY DITCH MATTING	TDM	
PERMANENT DITCH MATTING	PDM	
VETIVER PLANTING	VP	
PAVED WATERWAY	PW	

1. DESCRIPTION OF PROJECT

Project VI NH 66(008) Phase 1A-Contract 2 consists of construction of a two-lane roadway (to subgrade) around the south side of Christiansted, St. Croix, USVI. This project is known as the Christiansted Bypass. Several short sections of existing, adjacent roads will be extended to intersect with the Bypass. Culverts, storm drainage, utility relocation and sediment control measures will be installed.

The proposed road is generally on an east/west alignment running between Queens Cross Street and Contentment Road. Numerous natural drainage ways or guts, running south to north, cross the roadway alignment. These drainage ways convey upstream run-off toward Christiansted. The proposed construction will install culverts to convey run-off under the proposed roadway. The watershed on the south side of the road is generally underdeveloped while the area downstream of the road is densely urbanized.

1. GENERAL GUIDELINES

The Erosion Control Plans (ECP) are meant as a guideline for preventing erosion and controlling sediment. The work outlined in this narrative consists of applying measures throughout the life of the project to control erosion and minimize the sedimentation.
The measures consist of stabilization and structural practices, stormwater controls and other miscellaneous pollution prevention controls.

Coordinate the installation, use, and removal of erosion and sediment control measures with roadway construction activities to assure economical, effective, and continuous erosion and sediment control. Employ temporary stabilization practices in incremental stages as construction proceeds.

Install all erosion and sediment control measures as shown in the ECP or as directed by the Contracting Officer (CO). Do not modify the type, size, or location of any control or practice without approval from the CO. Inspect all sediment control measures daily and immediately after any rainfall event. Repair measures daily once damage to measures is discovered.

Preventing initial soil erosion is much more effective than trying to control eroded sediment. Therefore, stabilize all disturbed areas as soon as is practical, but no more than 14 days after construction activity has temporarily or permanently ceased. Except for perimeter control measures which shall be installed prior to the start of any clearing, grubbing or grading activity, install temporary controls in incremental stages as construction proceeds.

Control only sediment-laden runoff generated by the project site. Separate and quickly route clean, offsite runoff through the project by using earth diversion berms, diversion channels, and culverts.

Do not drive construction equipment across flowing waterways.

Do not allow construction vehicles to track sediment offsite of the project limits.

Do not allow any construction equipment to operate or access on the downslope side of perimeter control measures.

Do not allow any crossing of a flowing stream or disturbance of the existing stream bank by construction equipment, except as authorized by the CO.

In general, preserve existing vegetation, trees, and shrubs when possible, as directed by the CO.

2. SEQUENCE OF CONSTRUCTION

STAGE I (ESTABLISH PERIMETER CONTROLS):

1. Install berms and silt fence.
2. Install slope drains and stream diversions.
3. Construct permanent cross culverts, stilling basins, riprap channels and outlets.
4. Divert flow thru permanent culverts. Install inlet protection.
5. Clear & grub, installing required silt fence.
6. Remove any slope drains, berms or silt fence not shown on Phase 2 Erosion Control Plans as grading commences.

Prior to any construction or staging, construct the stabilized construction entrances as shown in the plans or as directed by the CO.

Prior to any clearing, grubbing, and excavation, construct perimeter controls (such as silt fence) to ensure that disturbed sediment does not leave the project site. Where possible, install permanent culverts and channels before beginning rough grading and divert offsite drainage through completed culverts as soon as practicable. Do not line with plastic those portions of the diversion channels that run along natural streambeds.

STAGE II (INTERMEDIATE CONTROLS/STABILIZATION):

Apply intermediate controls (inlet protection and ditch matting) during rough grading and culvert installation operations. Obtain the CO's approval before installing any controls not specified in the ECP. The CO may direct the installation of certain controls in order to forestall or mitigate potential or existing erosion problems or to respond to storm events or damage by construction operations.

Limit the combined grubbing and grading operations area to 8 acres of exposed soil at one time. Additional areas may be grubbed and graded after all erosion control and sediment control measures are in place and the site has been stabilized.

Clean erosion control measures (sediment trap, silt fence, etc.) when half full of sediment.

At the end of each day's grading operations, shape earthwork to minimize and control the erosion from storm runoff.

Install inlet protection prior to diverting water through inlets.

Provide wire-backed silt fence in all silt fence applications.

Upon completion of culverts, ensure that culvert entrances, outlets, and outlet channels are at final grade and are stabilized (with vegetation, riprap or pavement) before routing drainage through completed culverts.

Remove stream diversions, if any, and reroute offsite drainage through completed culverts as soon as is practical.

Once culvert headwalls are completed, install silt fence immediately behind headwalls and remove any silt fence blocking the culvert end(s).

FINAL CONTROLS/STABILIZATION:

After completion of roadway construction, do the following as directed by the CO:

Finish grading, riprap and apply permanent turf establishment to outlet channels.

Where necessary, replace damaged matting and reapply permanent turf establishment to disturbed areas where vegetation has not established.

Remove silt fence and inlet protection only after all upslope areas are stabilized and vegetation is well established.

Remove all perimeter silt fence only after toe-of-fill ditches have stabilized and vegetation is well established.

Remove all other perimeter controls when directed by the CO. Backfill, regrade and apply permanent turf establishment.

U.S. DEPARTMENT OF TRANSPORTATION
FEDERAL HIGHWAY ADMINISTRATION
EASTERN FEDERAL LANDS HIGHWAY DIVISION
STERLING, VIRGINIA

EROSION CONTROL LEGEND AND NARRATIVE

10/19/2006 7:11:31 AM M:\Projects\vi\st_crix\nh66(008)\proj_dev\Contract 2\details\EROSIONNAR.dgn

REG	STATE	PROJECT	SHEET NO.	TOTAL SHEETS
SE	VI	NH-66(008)	H2	193

Notes :

1. Stage I erosion control consists of clearing /grubbing, installing perimeter controls, and constructing stream diversions for culvert installation.
2. For general erosion control guidelines and sequence of construction, see Erosion Control Narrative.
3. See Detail 157-B for stream diversion sizes.
4. See Standards and Details section for erosion control details.

SYMBOLS

SILT FENCE	SF	X —— X ——
STREAM DIVERSION	SD	
INLET PROTECTION	IP	
DIVERSION BERM	DB	
OUTLET PROTECTION	OP	
TEMPORARY SLOPE DRAIN	TSD	

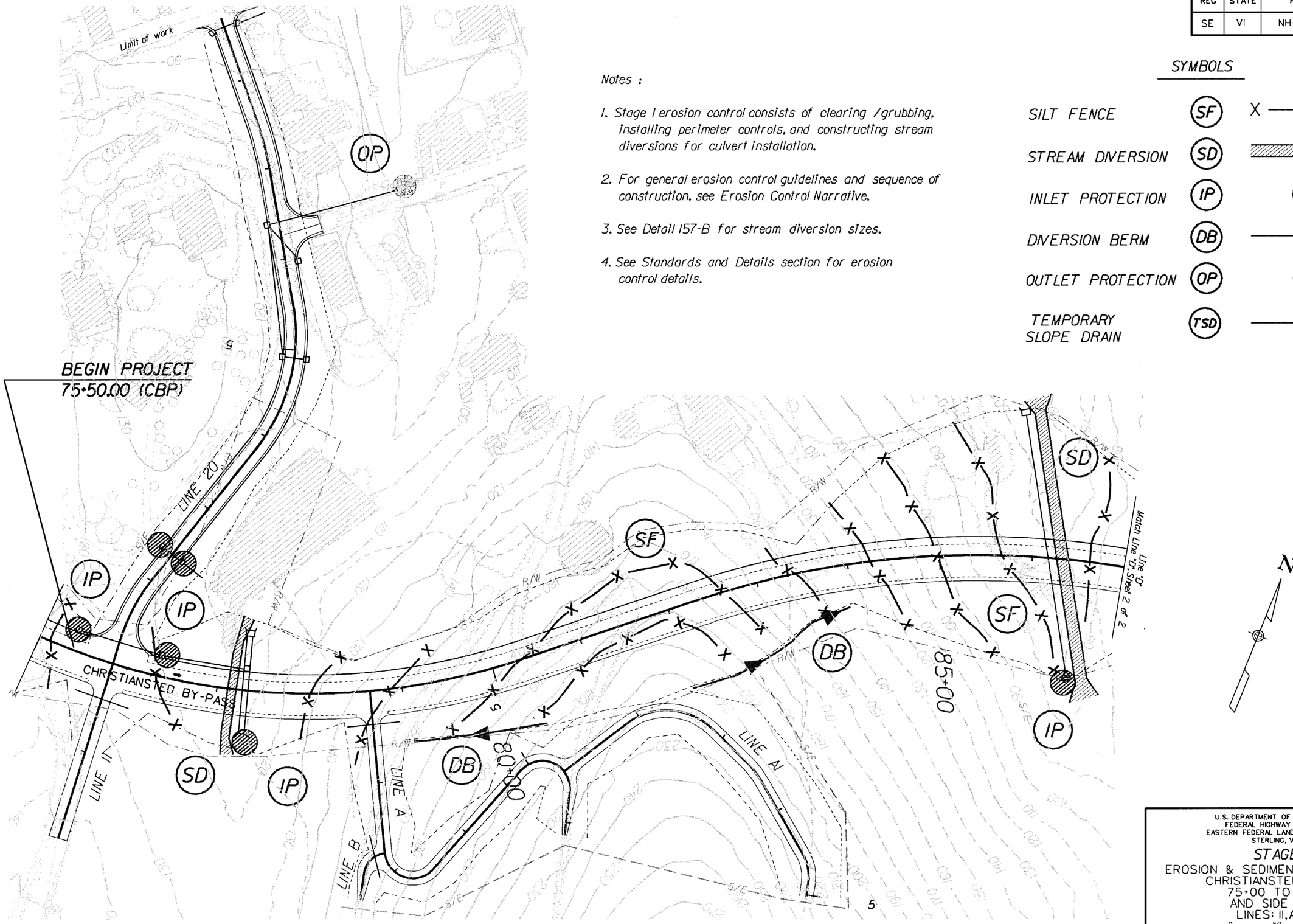

U.S. DEPARTMENT OF TRANSPORTATION
FEDERAL HIGHWAY ADMINISTRATION
EASTERN FEDERAL LANDS HIGHWAY DIVISION
STERLING, VIRGINIA

STAGE I

EROSION & SEDIMENT CONTROL PLAN
CHRISTIANSTED BY-PASS
75+00 TO 87+00
AND SIDE ROADS
LINES: II,A,B,20

0 50 100
SCALE IN FEET

SHEET 1 OF 2

10/24/2006 8:48:03 AM M:\Projects\vlis\st_crolx\nh66(008)\proj_dev\Contract 2\erosion.dgn

REG	STATE	PROJECT	SHEET NO.	TOTAL SHEETS
SE	VI	NH-66(008)	H3	193

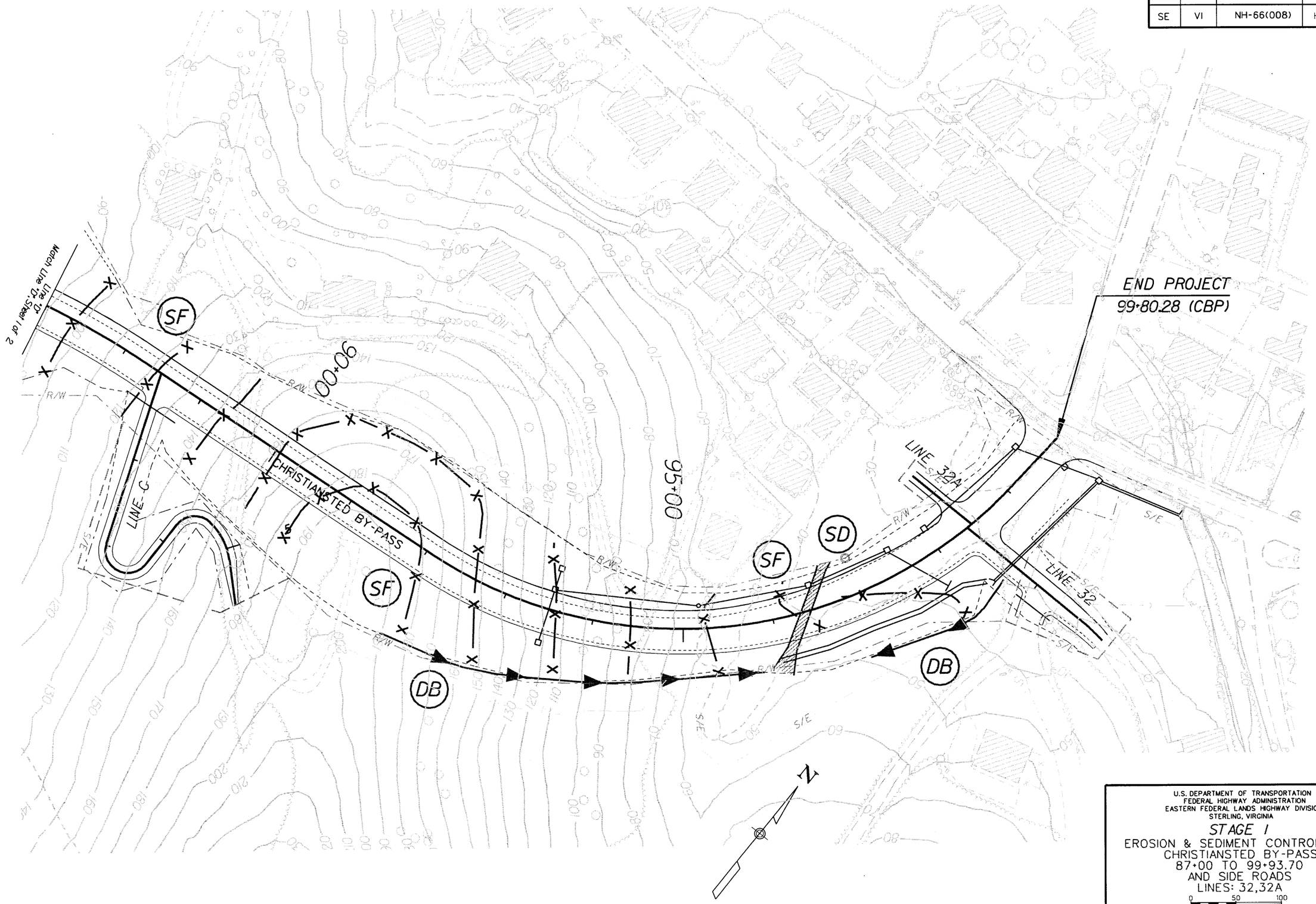

U.S. DEPARTMENT OF TRANSPORTATION
FEDERAL HIGHWAY ADMINISTRATION
EASTERN FEDERAL LANDS HIGHWAY DIVISION
STERLING, VIRGINIA

STAGE 1

EROSION & SEDIMENT CONTROL PLAN
CHRISTIANSTED BY-PASS
87+00 TO 99+93.70
AND SIDE ROADS
LINES: 32,32A

0 50 100
SCALE IN FEET

SHEET 2 OF 2

10/24/2006 8:48:09 AM M:\Projects\Ils\st_prot\nh66(008)\proj_dev\Contract 2\erosion.dgn

REG	STATE	PROJECT	SHEET NO.	TOTAL SHEETS
SE	VI	NH-66(008)	H4	193

SYMBOLS

SILT FENCE	SF	X —— X ——
DIVERSION BERM	DB	——▶——
OUTLET PROTECTION	OP	
TEMPORARY SLOPE DRAIN	TSD	——
PAVED WATERWAY	PW	
VETIVER PLANTING	VP	
TEMPORARY DITCH MATTING	TDM	
PERMANENT DITCH MATTING	PDM	

Notes :

1. Stage 2 erosion control includes but is not limited to installing intermediate and final controls, constructing ditch linings (temporary and permanent) and vetiver planting for slope protection
2. For general erosion control guidelines and sequence of construction, see Erosion Control Narrative.
3. Permanent outlet protection for culvert pipes and boxes is not shown, refer to the Bypass Plans (Sheets 1 and 2) for placement and type.
4. See Standards and Details section for erosion control details.

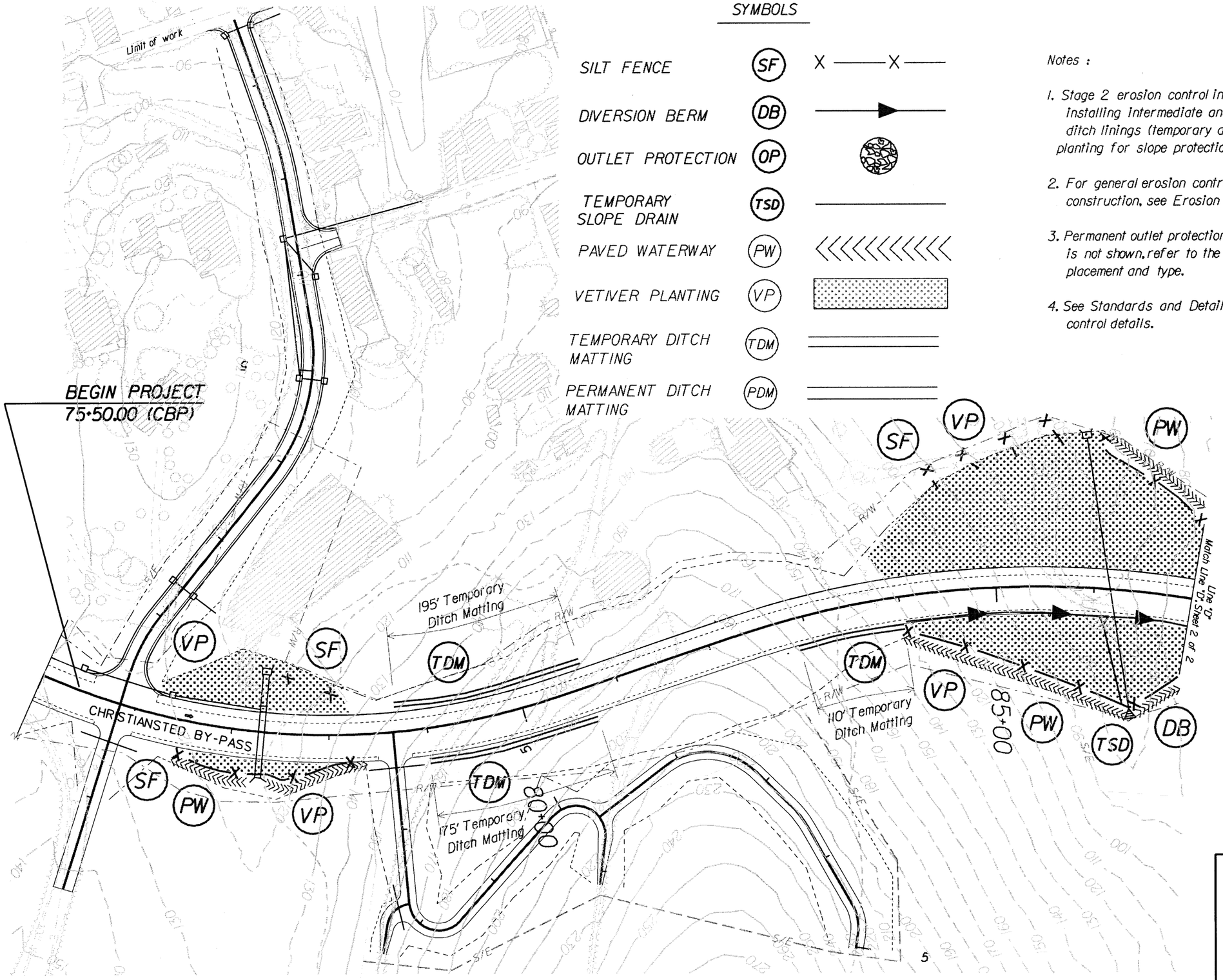

U.S. DEPARTMENT OF TRANSPORTATION
FEDERAL HIGHWAY ADMINISTRATION
EASTERN FEDERAL LANDS HIGHWAY DIVISION
STERLING, VIRGINIA

STAGE 2

EROSION & SEDIMENT CONTROL PLAN
CHRISTIANSTED BY-PASS
75+00 TO 87+00
AND SIDE ROADS
LINES: II,A,B,20

0 50 100
SCALE IN FEET

SHEET 1 OF 2

10/24/2006 9:02:50 AM M:\Projects\vlis\st_crolx\nh66(008)\proj_dev\Contract 2\erosion.dgn

REG	STATE	PROJECT	SHEET NO.	TOTAL SHEETS
SE	VI	NH-66(008)	H5	193

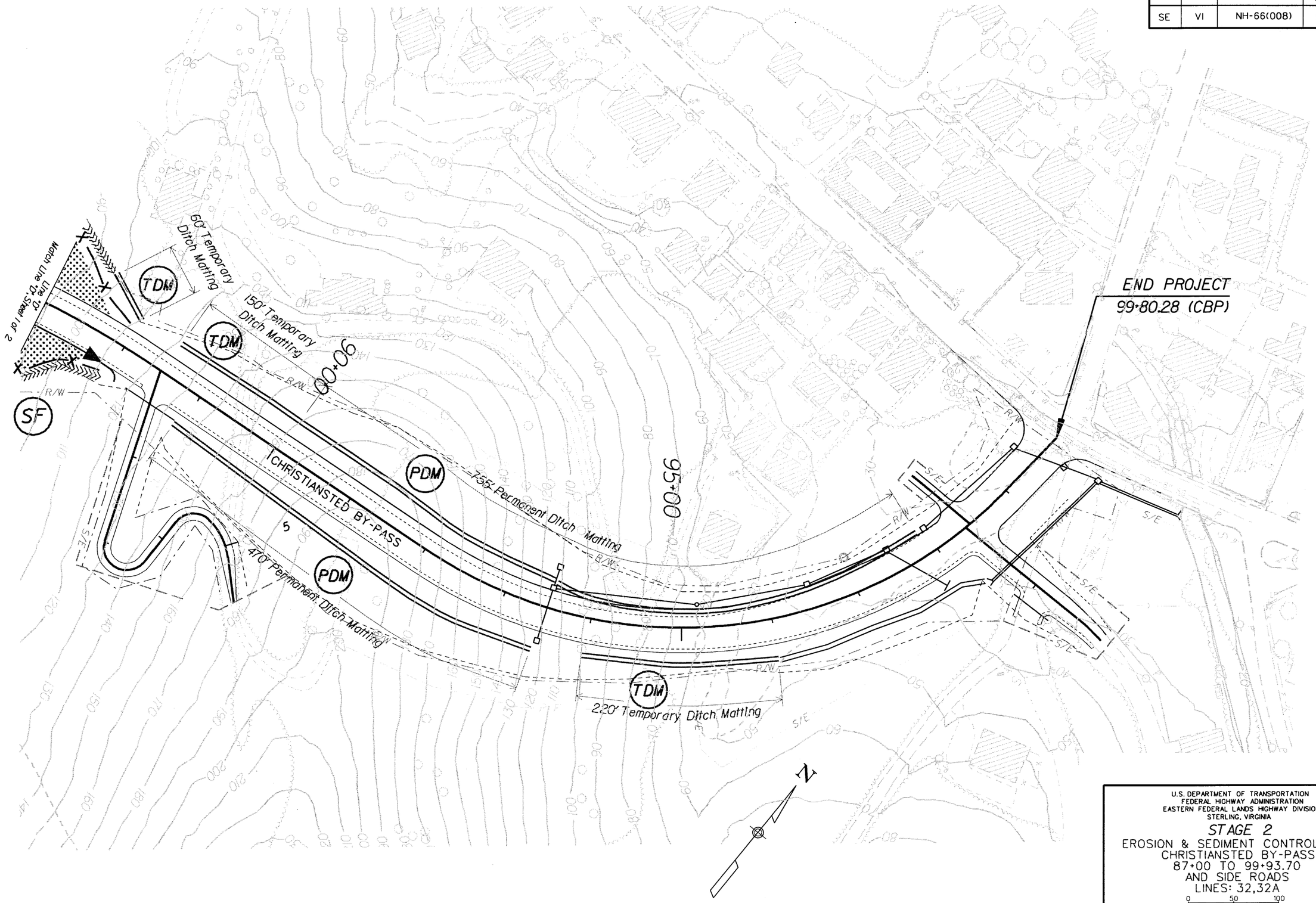

U.S. DEPARTMENT OF TRANSPORTATION
FEDERAL HIGHWAY ADMINISTRATION
EASTERN FEDERAL LANDS HIGHWAY DIVISION
STERLING, VIRGINIA

STAGE 2

EROSION & SEDIMENT CONTROL PLAN
CHRISTIANSTED BY-PASS
87+00 TO 99+93.70
AND SIDE ROADS
LINES: 32,32A

0 50 100
SCALE IN FEET

SHEET 2 OF 2

10/24/2006 9:02:57 AM M:\Projects\vlis\st_croix\nh66(008)proj_dev\Contract 2\erosion.dgn

REG	STATE	PROJECT	SHEET NO.	TOTAL SHEETS
SE	VI	NH-66(008)	J1	193

FOR INFORMATION ONLY

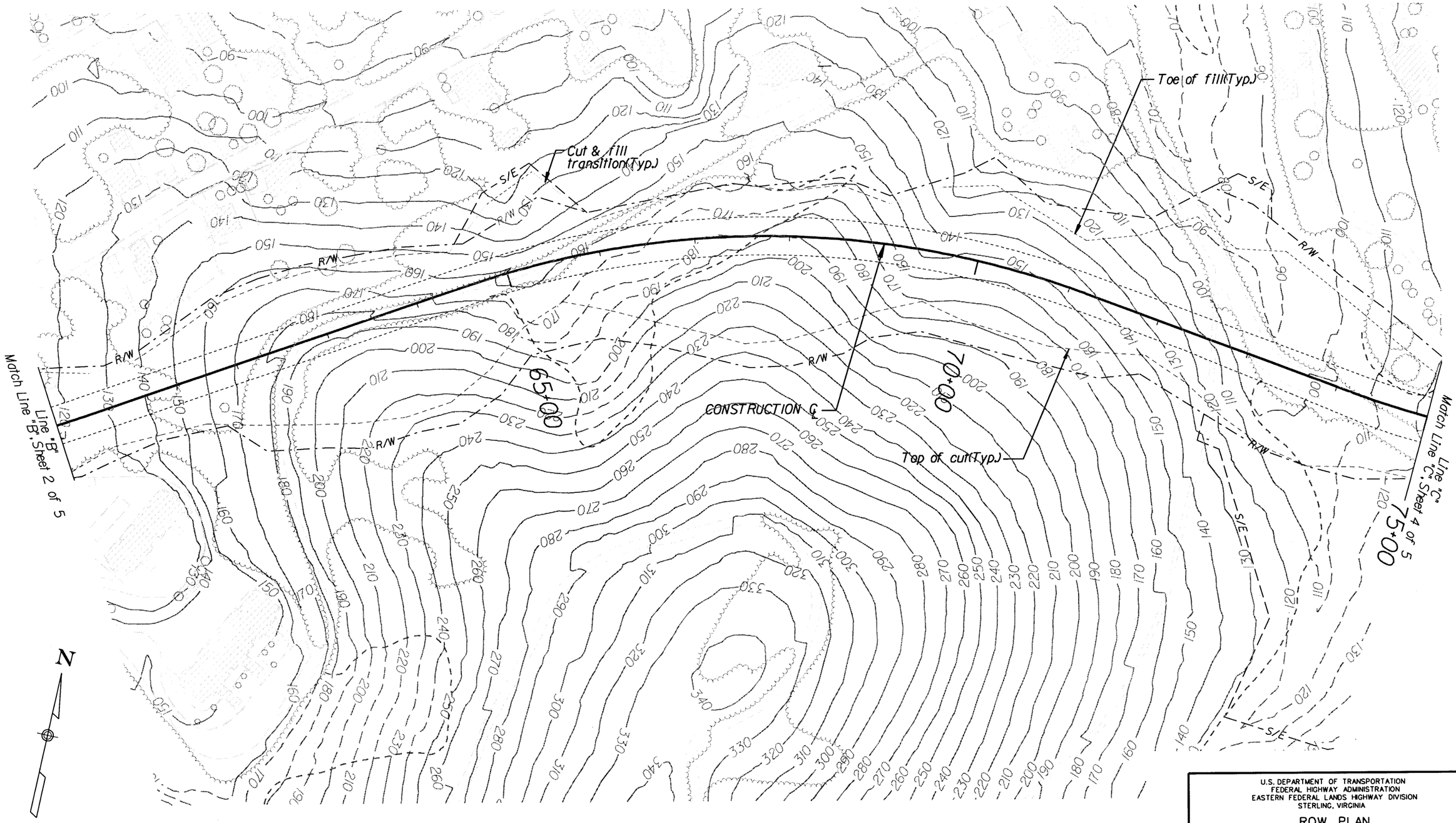

U.S. DEPARTMENT OF TRANSPORTATION
FEDERAL HIGHWAY ADMINISTRATION
EASTERN FEDERAL LANDS HIGHWAY DIVISION
STERLING, VIRGINIA

ROW PLAN
CHRISTIANSTED BY-PASS
60+00 TO 75+00
AND SIDE ROAD
LINE: HH

0 50 100
SCALE IN FEET

SHEET 1 OF 3

10/20/2006 9:44:07 AM M:\Projects\vlls\st_crolx\nh66(008)proj_dev\Contract 2\rowplnsht.dgn

REG	STATE	PROJECT	SHEET NO.	TOTAL SHEETS
SE	VI	NH-66(008)	J2	193

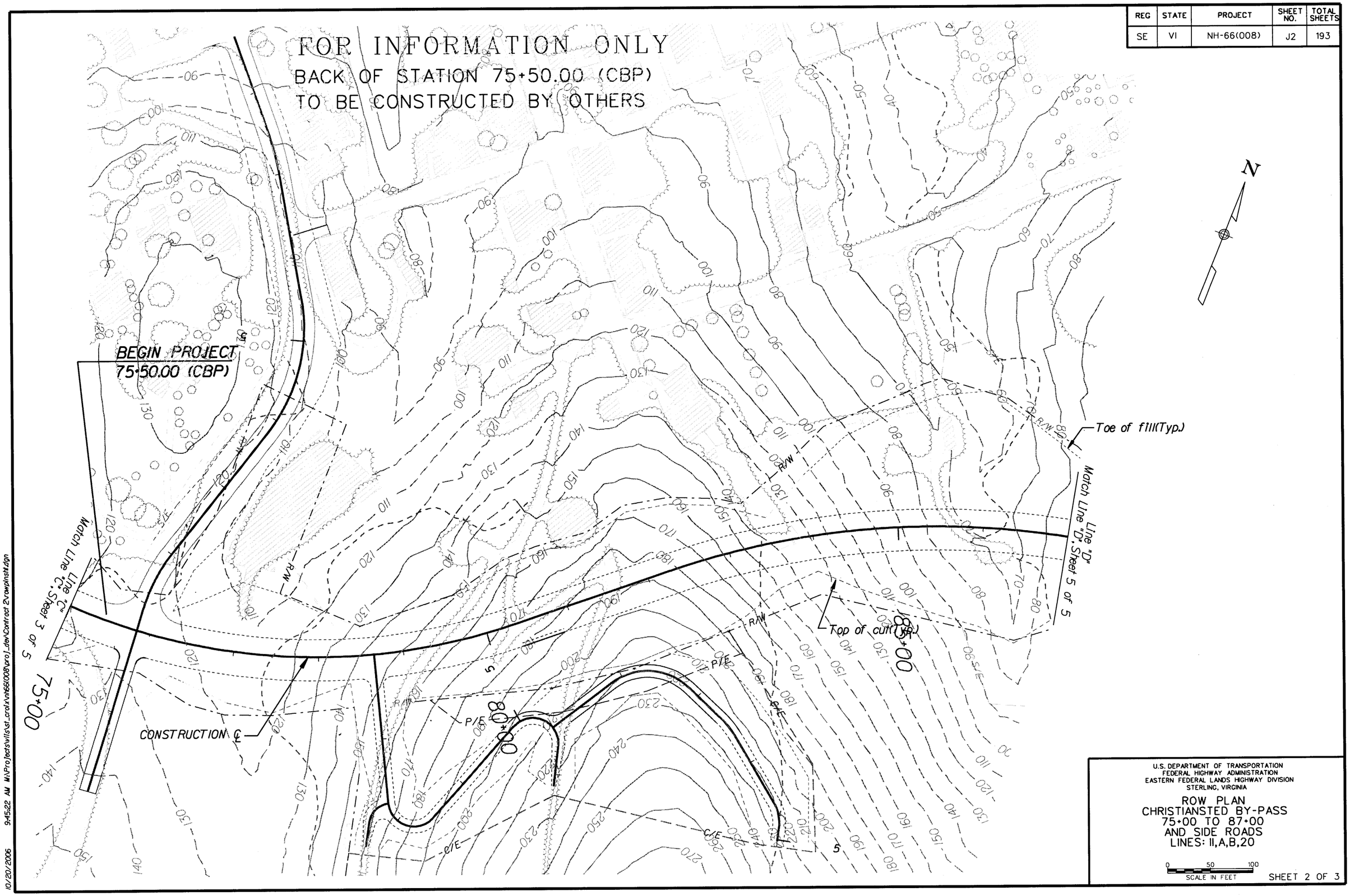

U.S. DEPARTMENT OF TRANSPORTATION
FEDERAL HIGHWAY ADMINISTRATION
EASTERN FEDERAL LANDS HIGHWAY DIVISION
STERLING, VIRGINIA

ROW PLAN
CHRISTIANSTED BY-PASS
75+00 TO 87+00
AND SIDE ROADS
LINES: 11,A,B,20

0 50 100
SCALE IN FEET

SHEET 2 OF 3

10/20/2006 9:45:22 AM M:\Projects\vi\ls\st_proj\x\nh66(008)\proj_dev\Contract 2\rowplnsht.dgn

REG	STATE	PROJECT	SHEET NO.	TOTAL SHEETS
SE	VI	NH-66(008)	J3	193

FOR INFORMATION ONLY

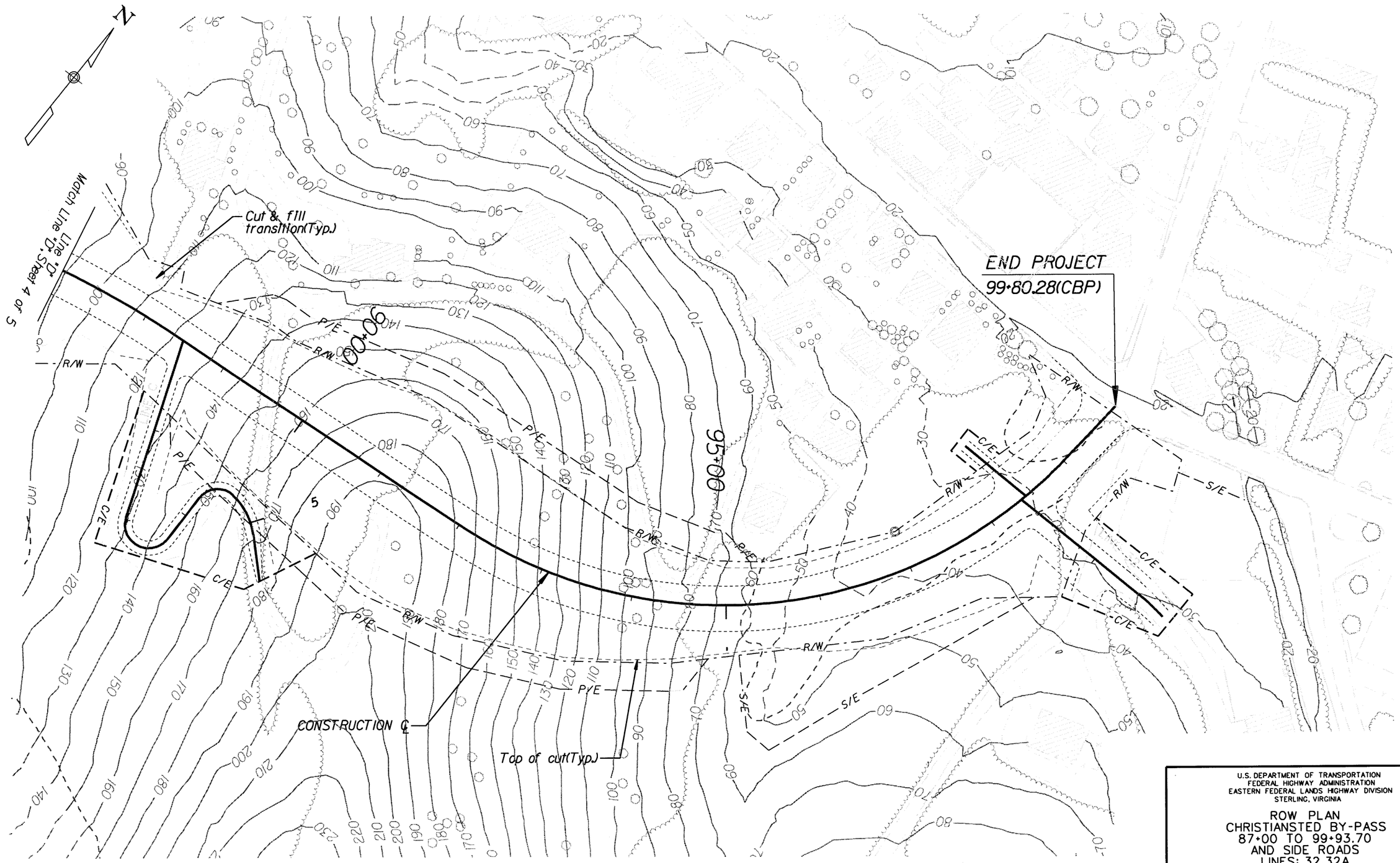

U.S. DEPARTMENT OF TRANSPORTATION
FEDERAL HIGHWAY ADMINISTRATION
EASTERN FEDERAL LANDS HIGHWAY DIVISION
STERLING, VIRGINIA

ROW PLAN
CHRISTIANSTED BY-PASS
87+00 TO 99+93.70
AND SIDE ROADS
LINES: 32,32A

0 50 100
SCALE IN FEET

SHEET 3 OF 3

10/20/2006 9:46:46 AM M:\Projects\vlls\st_crolx\nh66(008)proj_dev\Contract 2\rowplnsht.dgn

REG	STATE	PROJECT	SHEET NO.	TOTAL SHEETS
SE	VI	NH-66(008)	K1	193

FOR INFORMATION ONLY
CONSTRUCTED UNDER PROJECT
VI NH 66(008) PHASE IA - CONTRACT 2

Notes:

1. During construction of driveway/sideroad connections, intersecting crossroads, etc. (See ▨) use Single Lane and Shoulder Closures. (Details VI635-A & VI635-B)

2 Edges of pavement shown along Christiansted Bypass are future.

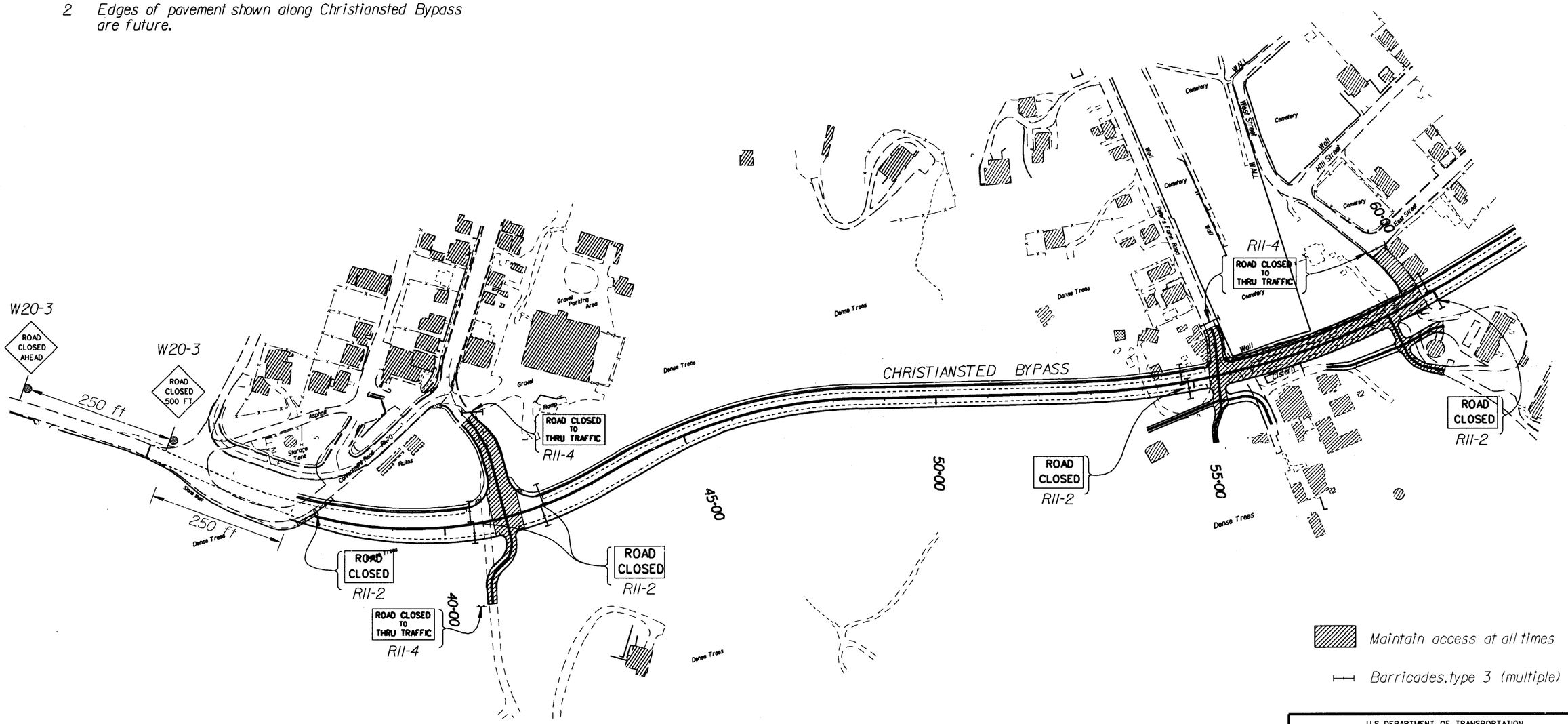

U.S. DEPARTMENT OF TRANSPORTATION
FEDERAL HIGHWAY ADMINISTRATION
EASTERN FEDERAL LANDS HIGHWAY DIVISION
STERLING, VIRGINIA

CONSTRUCTION TRAFFIC CONTROL

Sheet 1 of 3

10/22/2006 5:22:00 PM M:\Projects\wlts\st_croix\nh66(008)\proj_dev\Contract 2\traffcont2.dgn

REG	STATE	PROJECT	SHEET NO.	TOTAL SHEETS
SE	VI	NH-66(008)	K2	193

Notes:

1. During construction of driveway/sideroad connections, intersecting crossroads, etc. (See ▨) use Single Lane and Shoulder Closures. (Details VI635-A & VI635-B)

2. Edges of pavement shown along Christiansted Bypass are future.

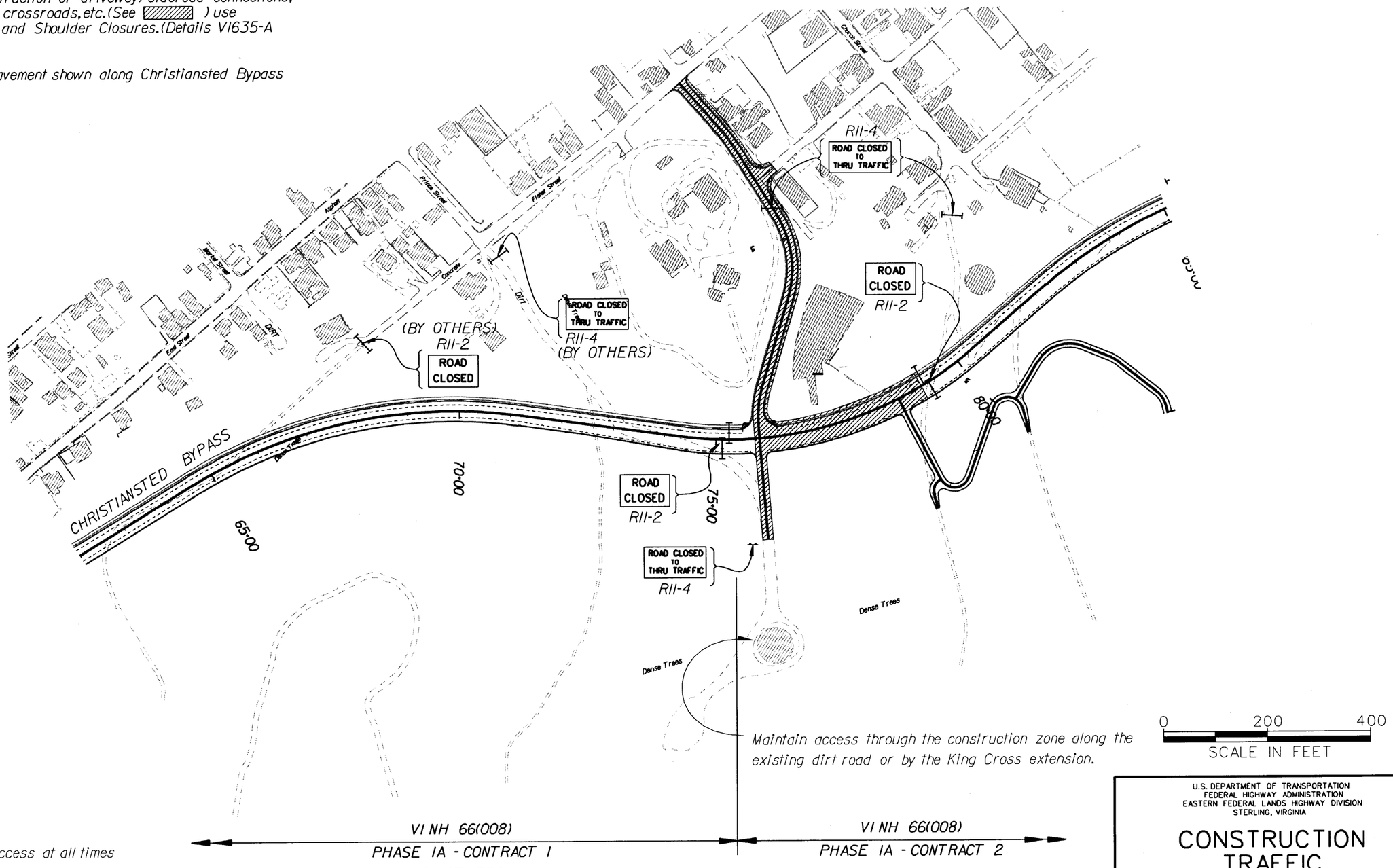

▨ Maintain access at all times

⊢⊣ Barricades, type 3 (multiple)

U.S. DEPARTMENT OF TRANSPORTATION
FEDERAL HIGHWAY ADMINISTRATION
EASTERN FEDERAL LANDS HIGHWAY DIVISION
STERLING, VIRGINIA

CONSTRUCTION TRAFFIC CONTROL

Sheet 2 of 3

10/17/2006 1:13:36 PM M:\Projects\vils\st_croix\nh66(008)proj_dev\Contract 2\traffconv2.dgn

REG	STATE	PROJECT	SHEET NO.	TOTAL SHEETS
SE	VI	NH-66(008)	K3	193

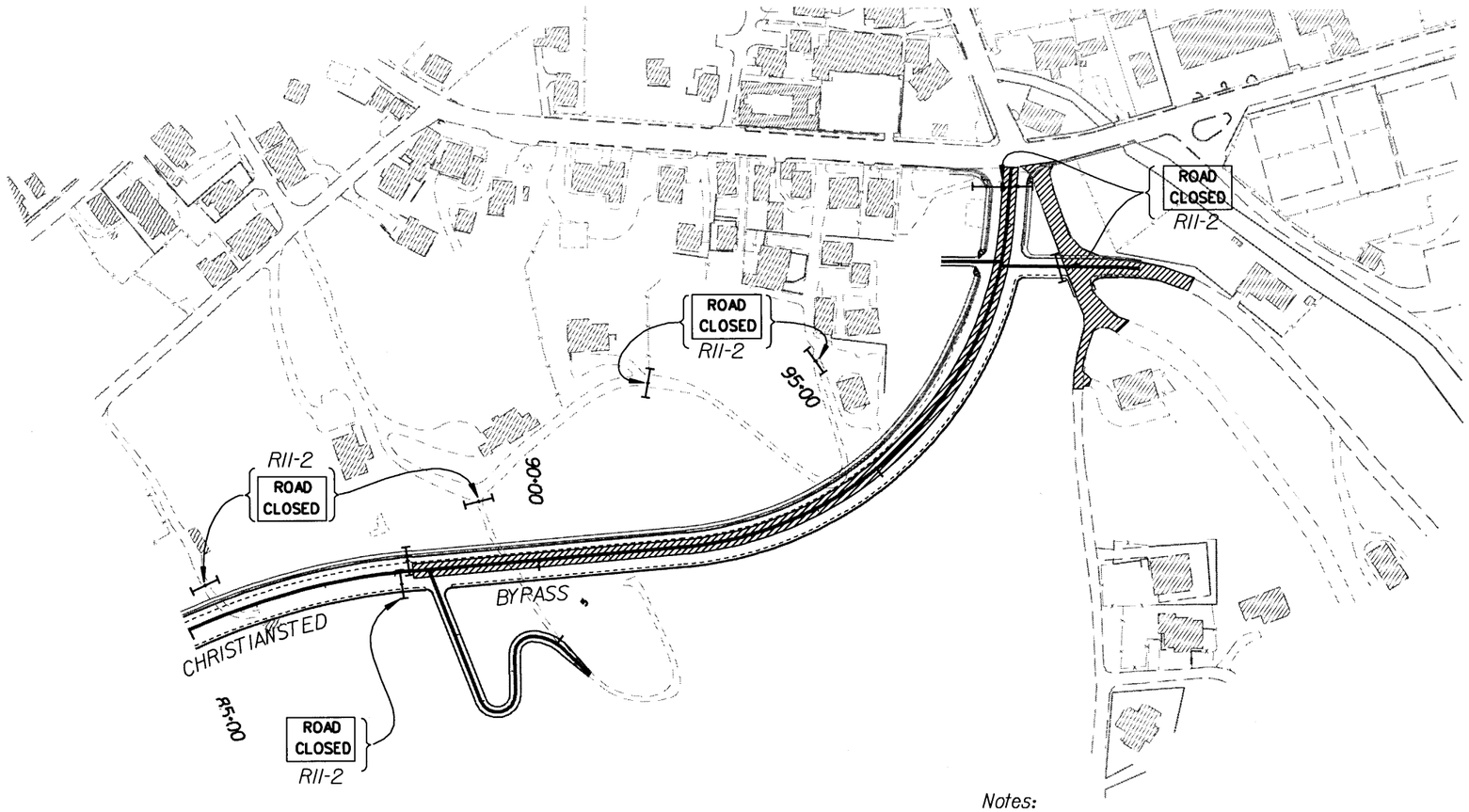

Notes:

1. During construction of driveway/sideroad connections, intersecting crossroads, etc. (See ▨) use Single Lane and Shoulder Closures. (Details VI635-A & VI635-B)

2 Edges of pavement shown along Christiansted Bypass are future.

▨ Maintain access at all times

⊢⊣ Barricades, type 3 (multiple)

0 200 400
SCALE IN FEET

U.S. DEPARTMENT OF TRANSPORTATION
FEDERAL HIGHWAY ADMINISTRATION
EASTERN FEDERAL LANDS HIGHWAY DIVISION
STERLING, VIRGINIA

CONSTRUCTION TRAFFIC CONTROL

Sheet 3 of 3

10/17/2006 1:14:09 PM M:\Projects\vifls\st_croix\nh66(008)\proj_dev\Contract 2\traffcont2.dgn

REG	STATE	PROJECT	SHEET NO.	TOTAL SHEETS
SE	VI	NH-66(008)	K4	193

FOR INFORMATION ONLY
CONSTRUCTED UNDER PROJECT
VI NH 66(008) PHASE IA - CONTRACT 2

Notes:

1. Edges of pavement shown along Christiansted Bypass are future
2. Signs labeled as EXISTING will remain in place during and after Contract I construction.

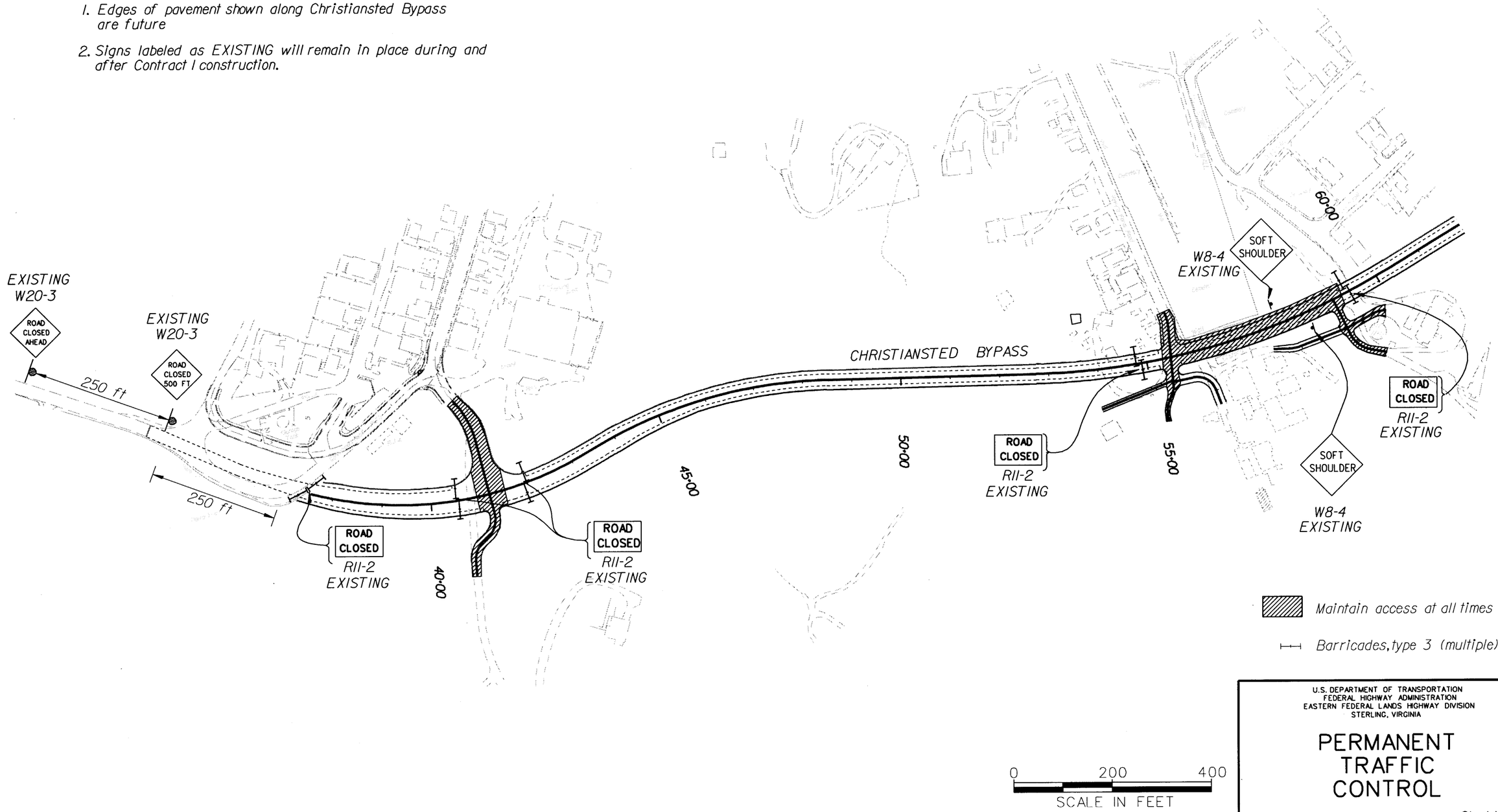

U.S. DEPARTMENT OF TRANSPORTATION
FEDERAL HIGHWAY ADMINISTRATION
EASTERN FEDERAL LANDS HIGHWAY DIVISION
STERLING, VIRGINIA

PERMANENT TRAFFIC CONTROL

Sheet 1 of 3

10/17/2006 1:14:47 PM M:\Projects\vi\st_croix\nh66\008\proj_dev\Contract 2\traffcon2.dgn

REG	STATE	PROJECT	SHEET NO.	TOTAL SHEETS
SE	VI	NH-66(008)	K5	193

Notes:

* Constructed per Contract 2 Construction Traffic Control Sheets.

Signs labled as EXISTING will remain in place during and after Contract I construction.

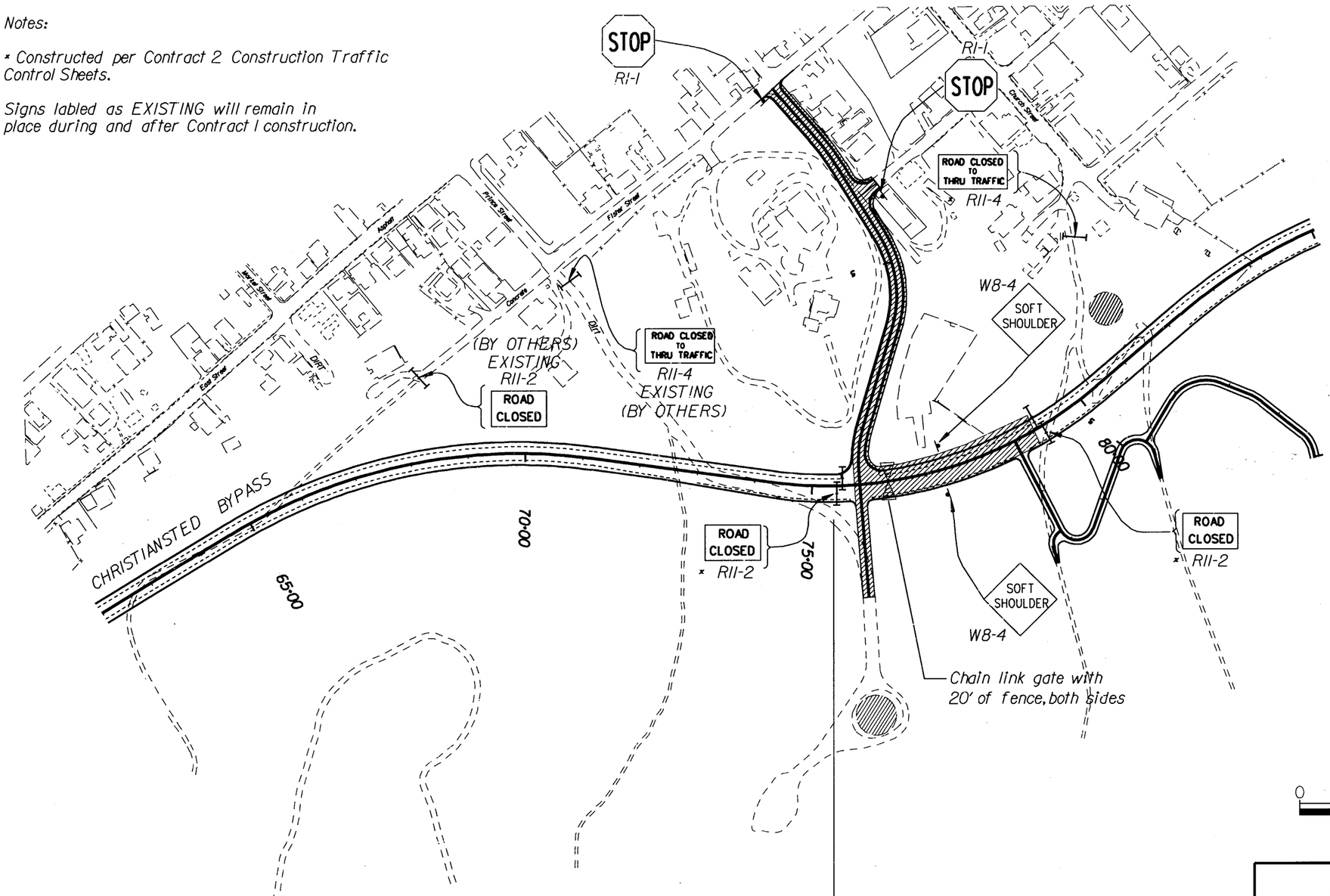

Maintain access at all times

Barricades, type 3 (multiple)

Chain Link Gate

VI NH 66(008)
PHASE IA - CONTRACT 1
(BY OTHERS)

VI NH 66(008)
PHASE IA - CONTRACT 2

U.S. DEPARTMENT OF TRANSPORTATION
FEDERAL HIGHWAY ADMINISTRATION
EASTERN FEDERAL LANDS HIGHWAY DIVISION
STERLING, VIRGINIA

PERMANENT TRAFFIC CONTROL

Sheet 2 of 3

10/22/2006 5:30:21 PM M:\Projects\vlls\st_croix\nh66(008)\proj_dev\Contract 2\traffcontr2.dgn

REG	STATE	PROJECT	SHEET NO.	TOTAL SHEETS
SE	VI	NH-66(008)	K6	193

Note:

* Constructed per Contract 2 Construction Traffic Control Plan sheets

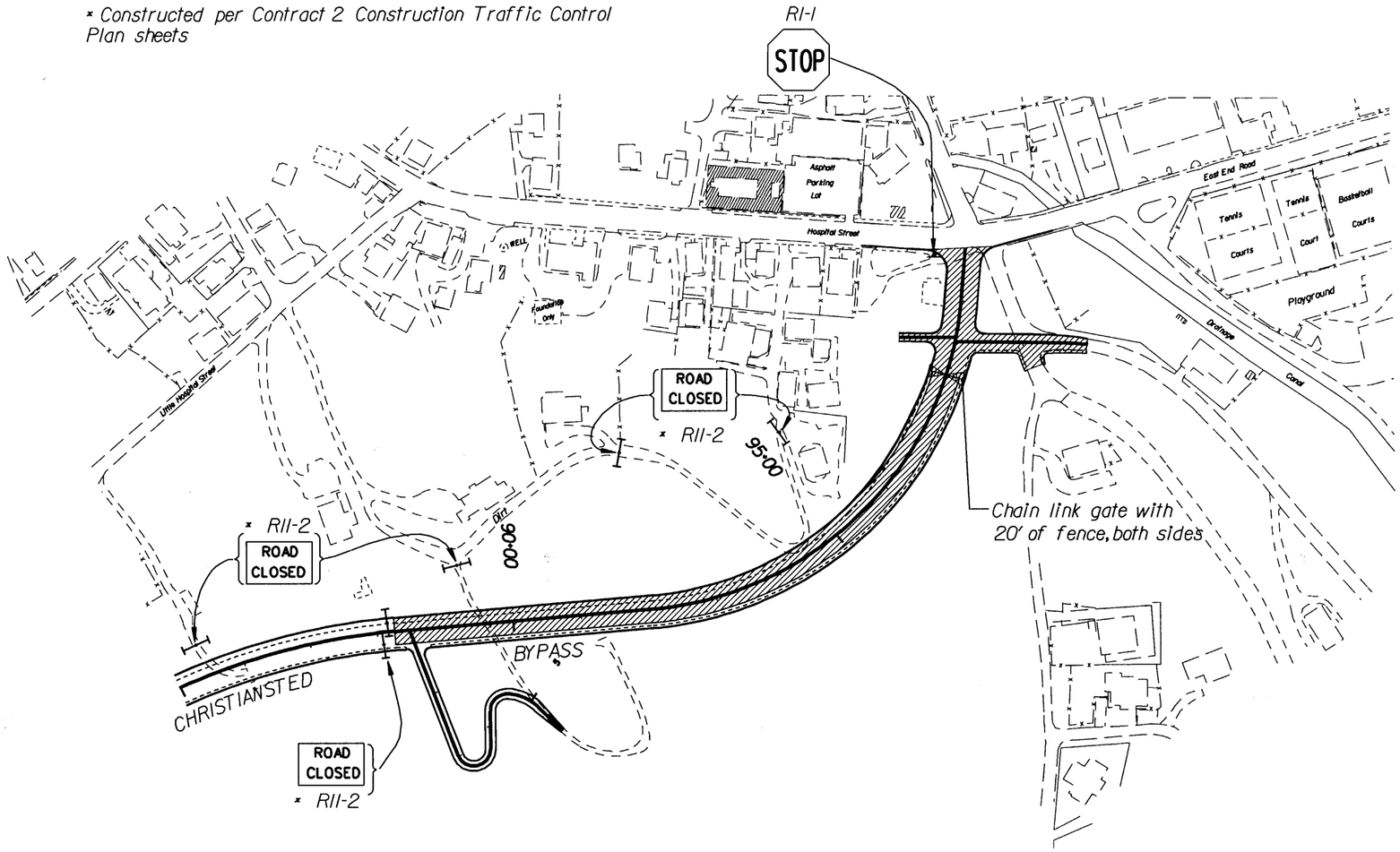

Maintain access at all times

Barricades, type 3 (multiple)

Chain Link Gate

0 200 400
SCALE IN FEET

U.S. DEPARTMENT OF TRANSPORTATION
FEDERAL HIGHWAY ADMINISTRATION
EASTERN FEDERAL LANDS HIGHWAY DIVISION
STERLING, VIRGINIA

PERMANENT TRAFFIC CONTROL

Sheet 3 of 3

10/22/2006 5:33:58 PM M:\Projects\vi\st_croix\nh66(008)proj_dev\Contract 2\traffcon2.dgn

REG	STATE	PROJECT	SHEET NO.	TOTAL SHEETS
SE	VI	NH-66(008)	L1	193

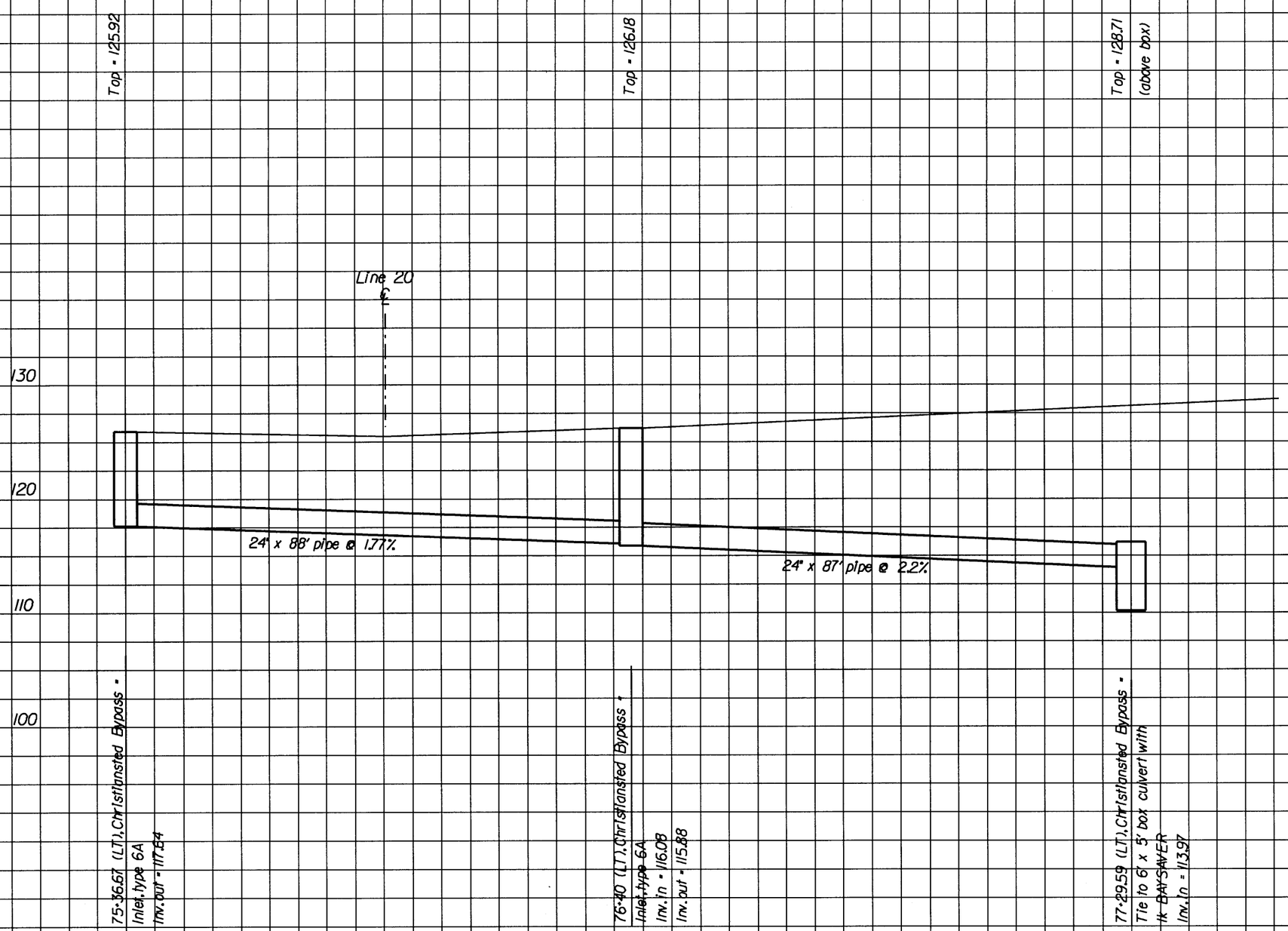

U.S. DEPARTMENT OF TRANSPORTATION
FEDERAL HIGHWAY ADMINISTRATION
EASTERN FEDERAL LANDS HIGHWAY DIVISION
STERLING, VIRGINIA

DRAINAGE CROSS SECTIONS

2:41:52 PM

REG	STATE	PROJECT	SHEET NO.	TOTAL SHEETS
SE	VI	NH-66(008)	L2	193

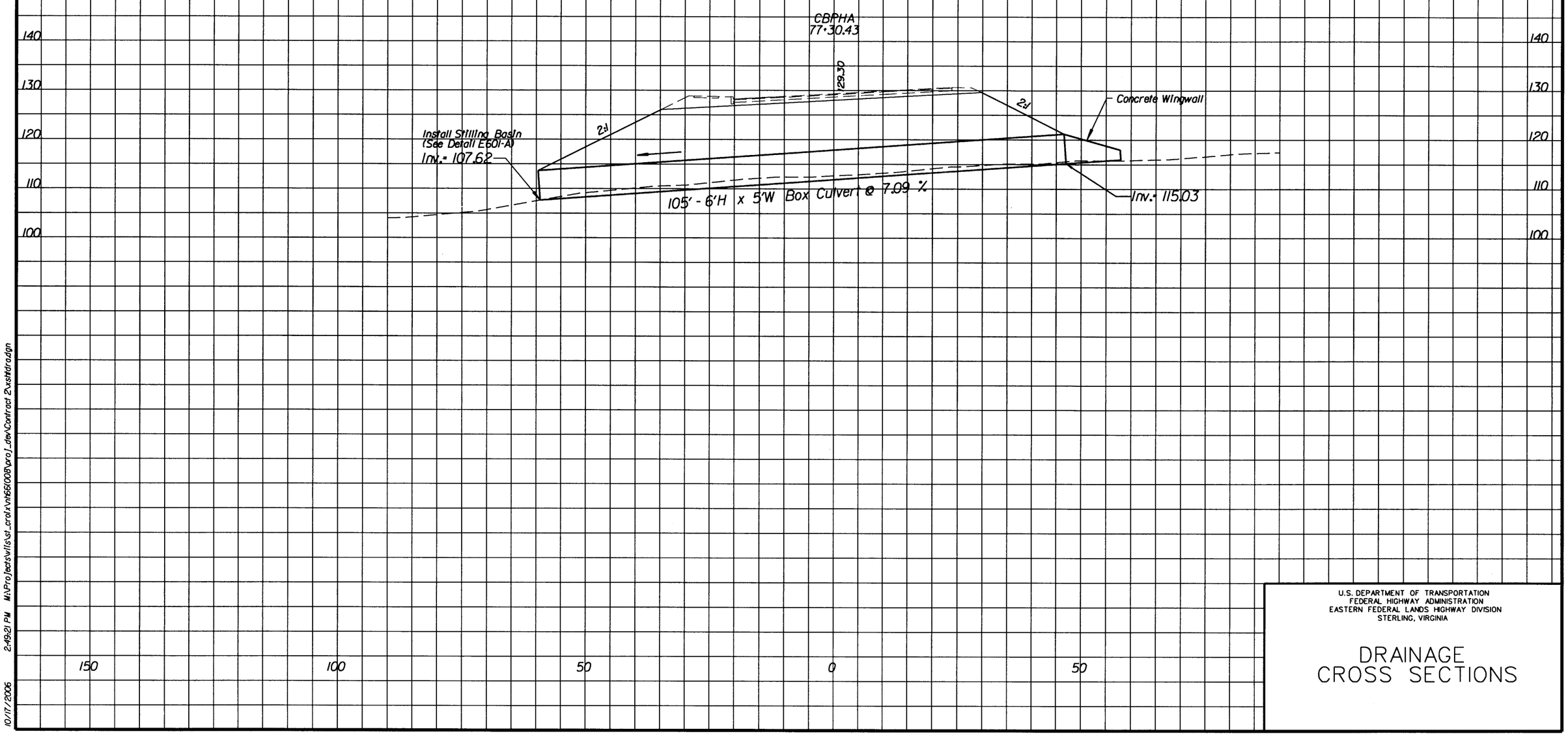

U.S. DEPARTMENT OF TRANSPORTATION
FEDERAL HIGHWAY ADMINISTRATION
EASTERN FEDERAL LANDS HIGHWAY DIVISION
STERLING, VIRGINIA

DRAINAGE CROSS SECTIONS

10/17/2006 2:49:21 PM M:\Projects\vlls\st_croix\nh66(008)\proj_dev\Contract 2\xshtdra.dgn

REG	STATE	PROJECT	SHEET NO.	TOTAL SHEETS
SE	VI	NH 66(008)	L3	193

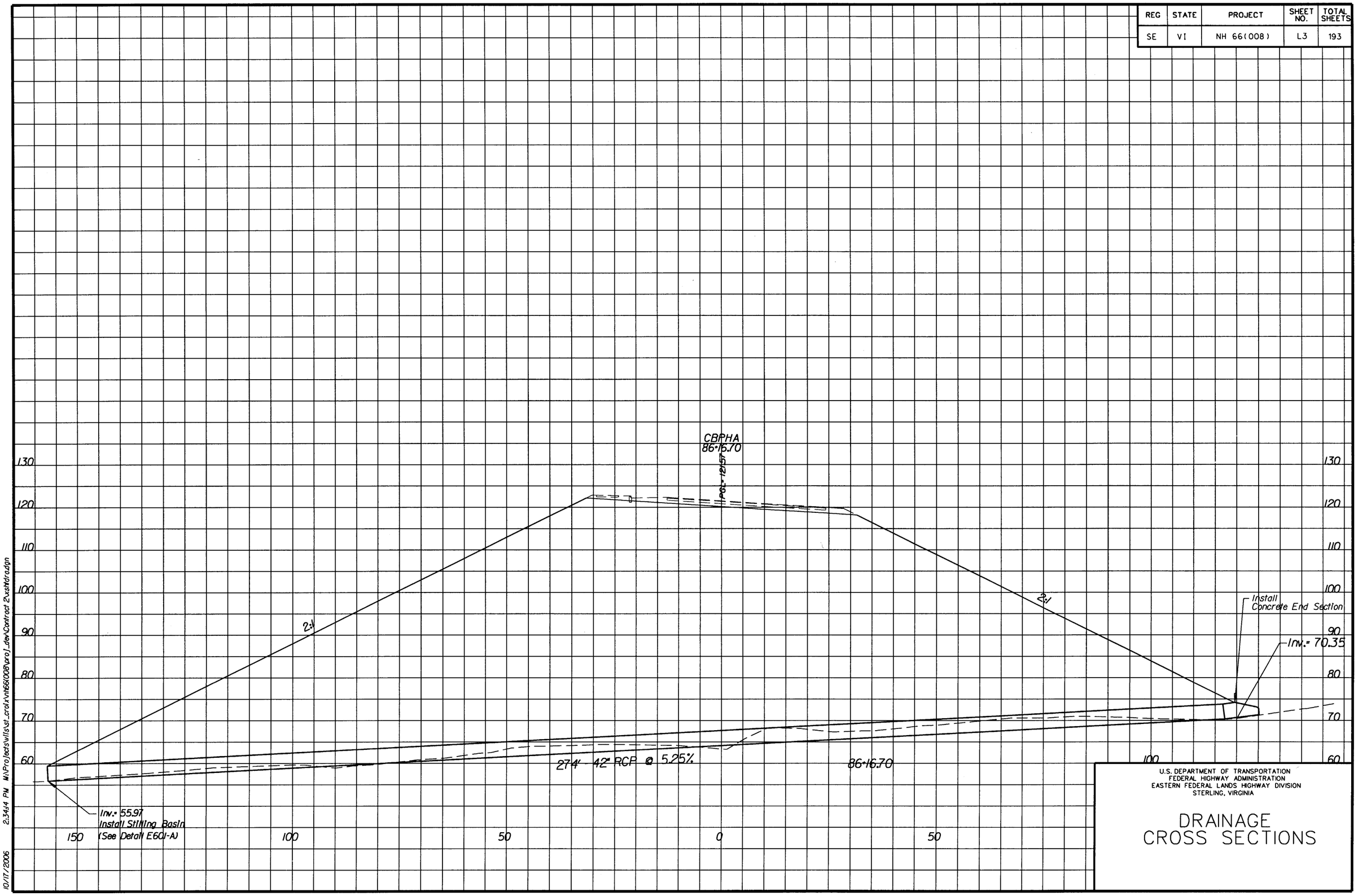

U.S. DEPARTMENT OF TRANSPORTATION
FEDERAL HIGHWAY ADMINISTRATION
EASTERN FEDERAL LANDS HIGHWAY DIVISION
STERLING, VIRGINIA

DRAINAGE CROSS SECTIONS

10/17/2006 2:34:14 PM M:\Projects\vlis\st_croix\nh66(008)proj_dev\Contract 2\xshtdra.dgn

REG	STATE	PROJECT	SHEET NO.	TOTAL SHEETS
SE	VI	NH-66(008)	L4	193

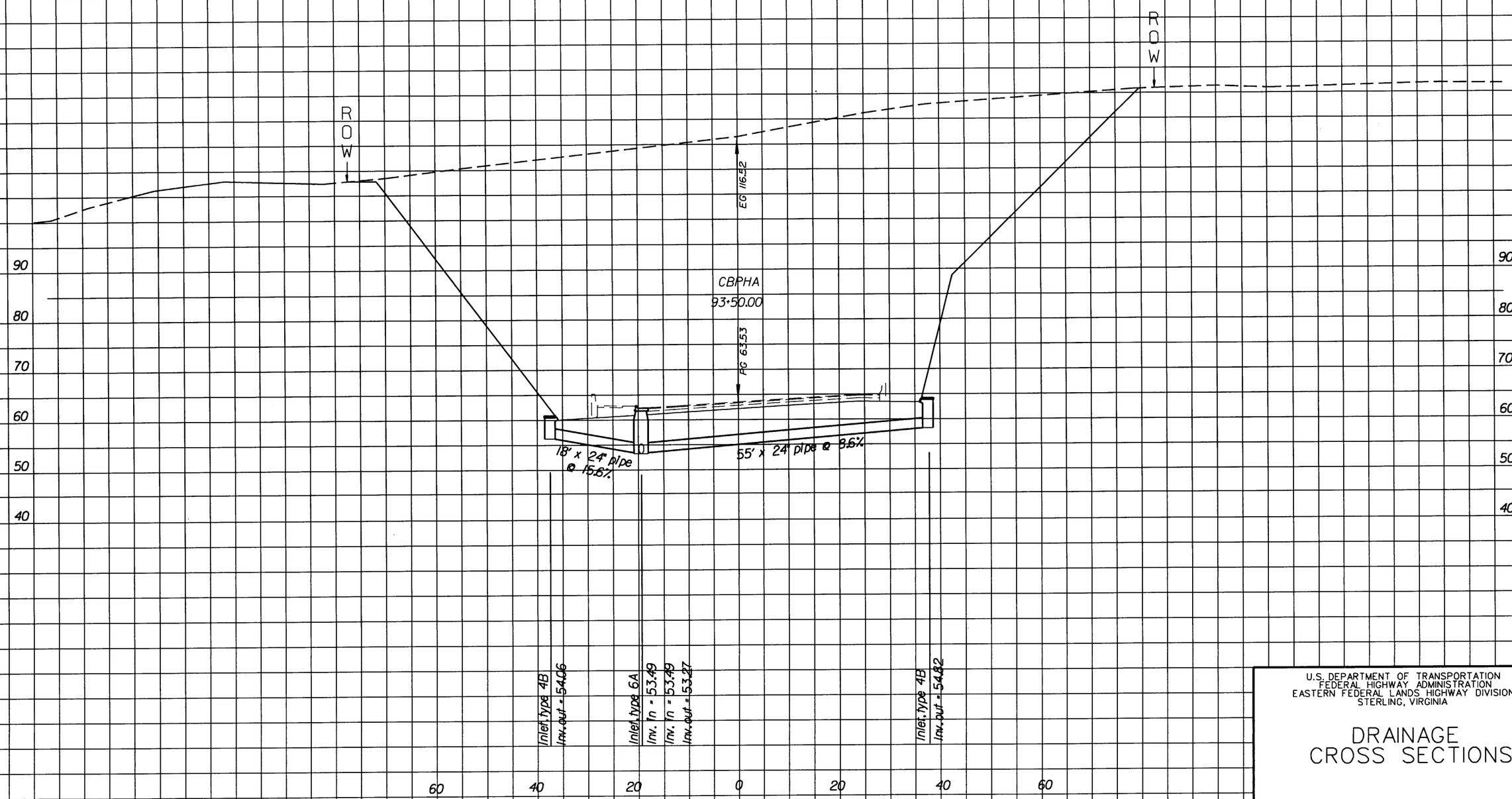

U.S. DEPARTMENT OF TRANSPORTATION
FEDERAL HIGHWAY ADMINISTRATION
EASTERN FEDERAL LANDS HIGHWAY DIVISION
STERLING, VIRGINIA

DRAINAGE CROSS SECTIONS

2:41:26 PM

REG	STATE	PROJECT	SHEET NO.	TOTAL SHEETS
SE	VI	NH-66(008)	L5	193

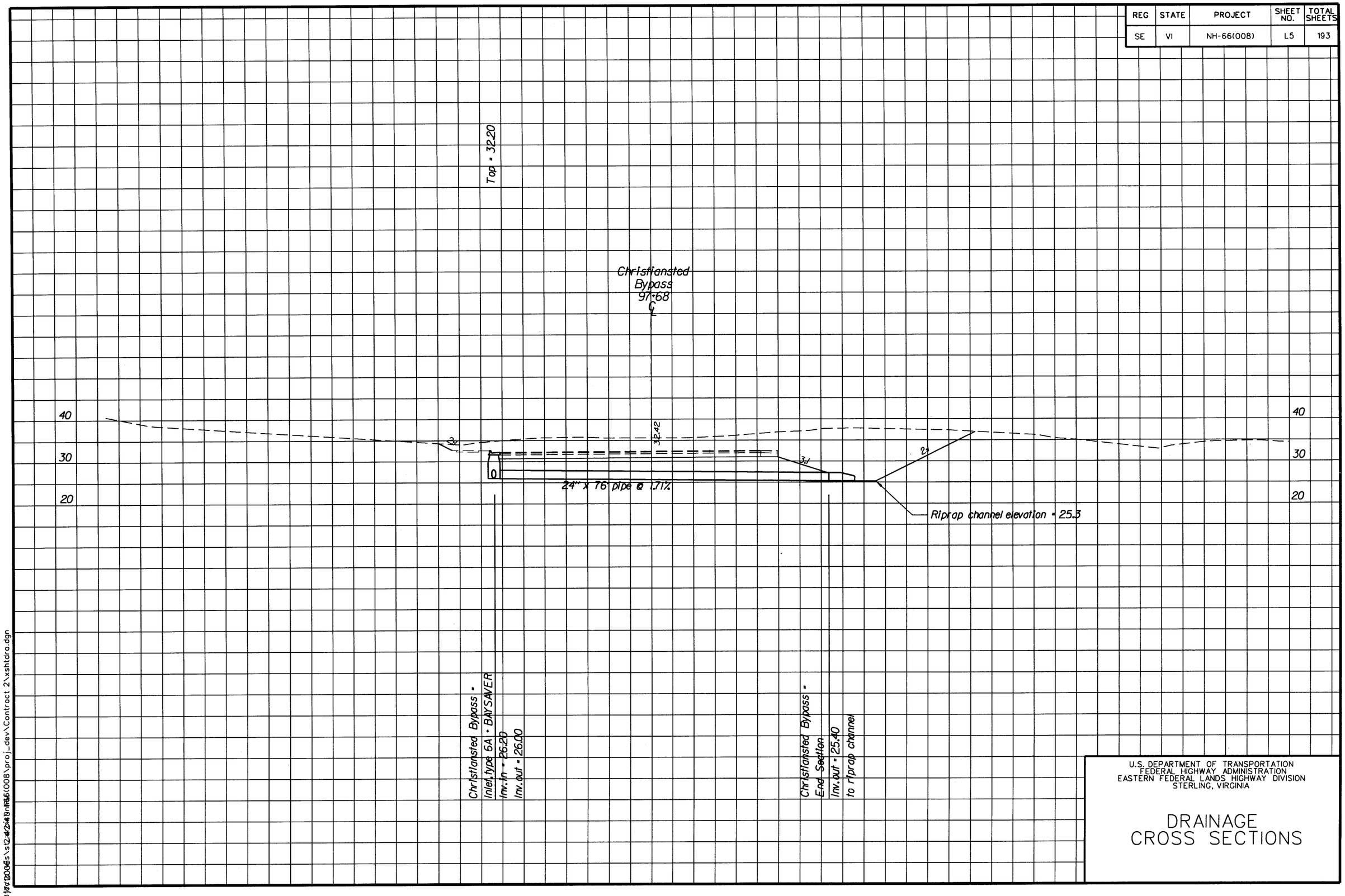

U.S. DEPARTMENT OF TRANSPORTATION
FEDERAL HIGHWAY ADMINISTRATION
EASTERN FEDERAL LANDS HIGHWAY DIVISION
STERLING, VIRGINIA

DRAINAGE CROSS SECTIONS

REG	STATE	PROJECT	SHEET NO.	TOTAL SHEETS
SE	VI	NH-66(008)	L6	193

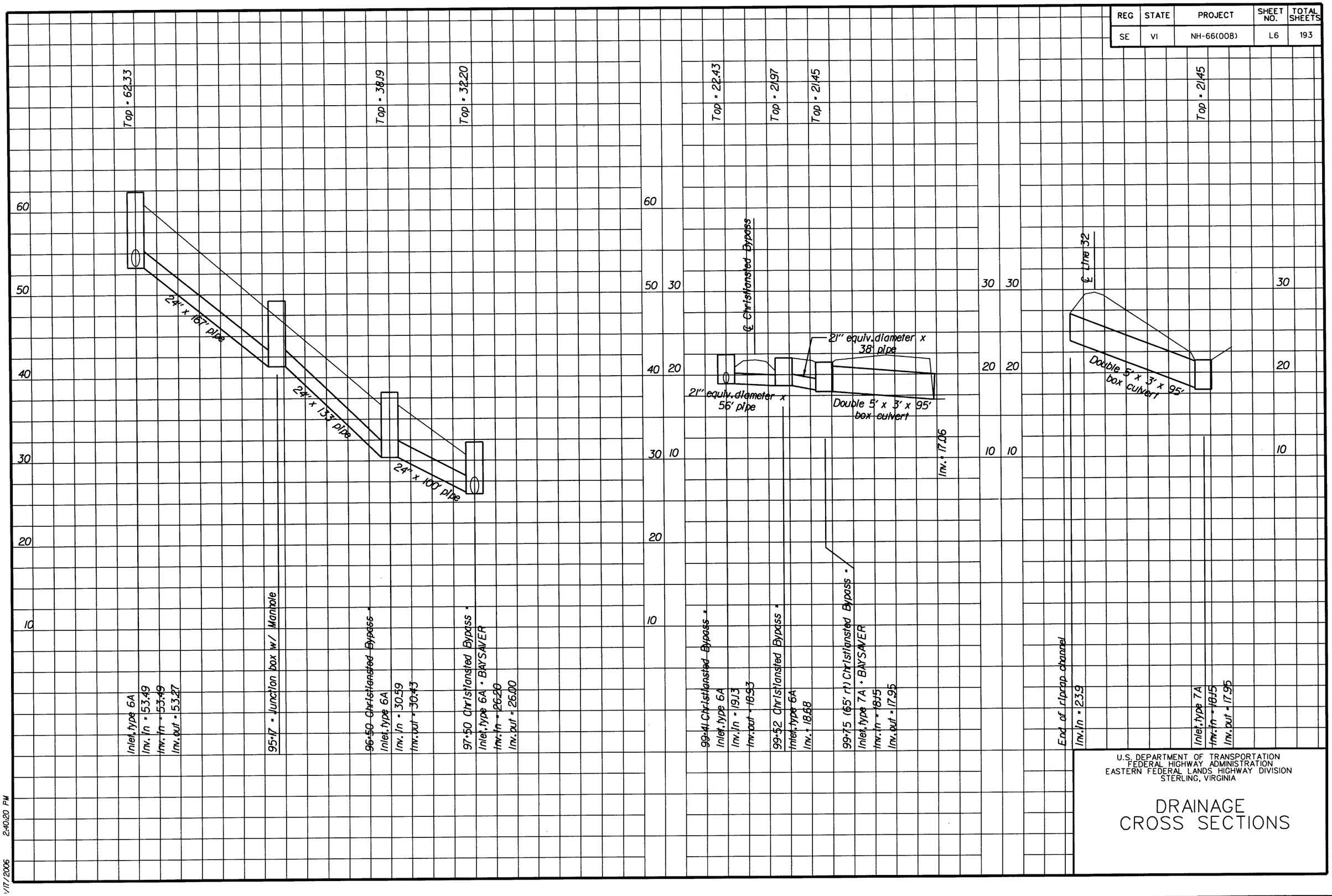

U.S. DEPARTMENT OF TRANSPORTATION
FEDERAL HIGHWAY ADMINISTRATION
EASTERN FEDERAL LANDS HIGHWAY DIVISION
STERLING, VIRGINIA

DRAINAGE CROSS SECTIONS

V17/2006 2:40:20 PM

REG	STATE	PROJECT	SHEET NO.	TOTAL SHEETS
SE	VI	NH-66(008)	L7	193

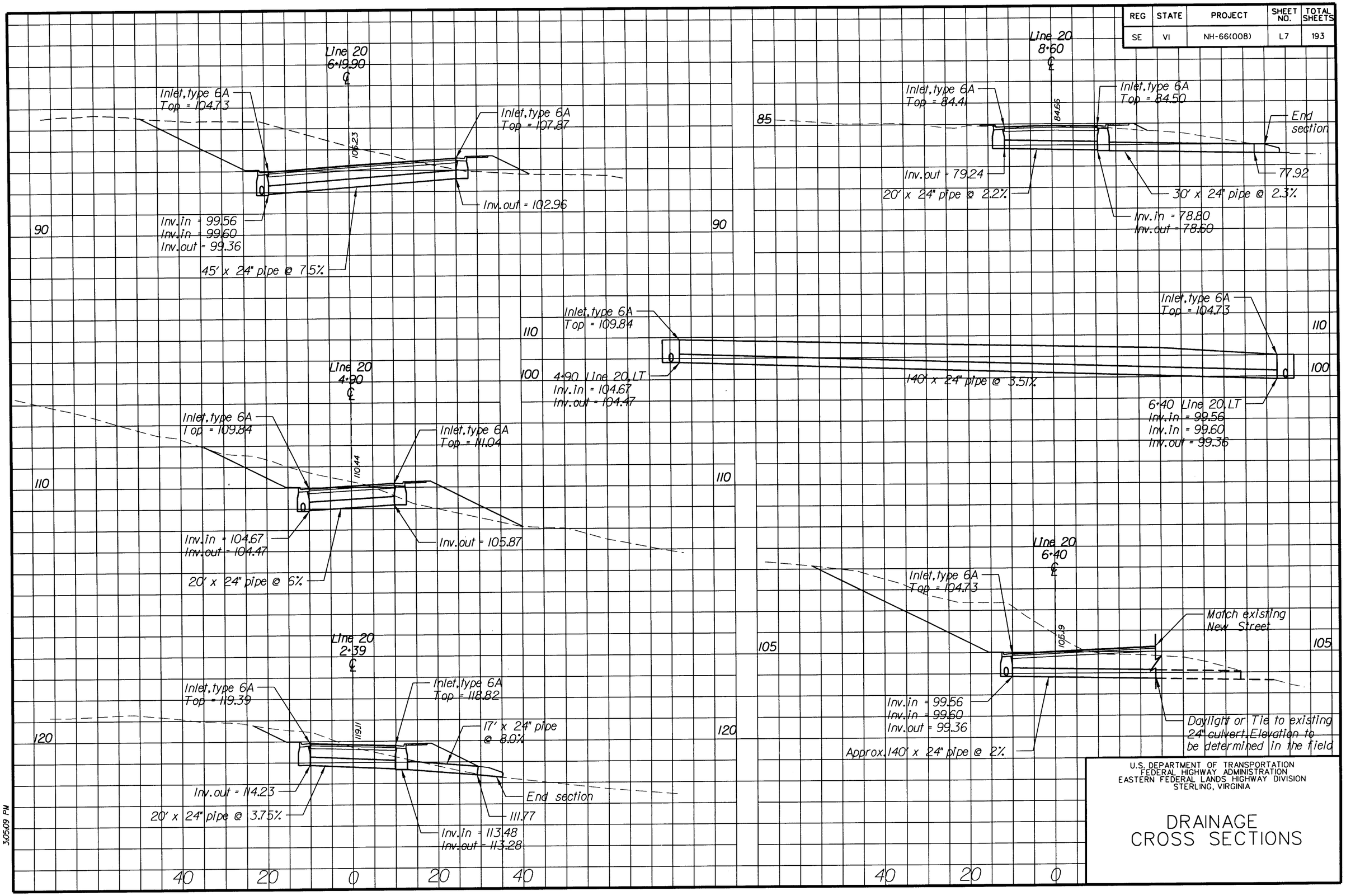

U.S. DEPARTMENT OF TRANSPORTATION
FEDERAL HIGHWAY ADMINISTRATION
EASTERN FEDERAL LANDS HIGHWAY DIVISION
STERLING, VIRGINIA

DRAINAGE CROSS SECTIONS

3:05:09 PM

REG	STATE	PROJECT	SHEET NO.	TOTAL SHEETS
SE	VI	NH-66(008)	L8	193

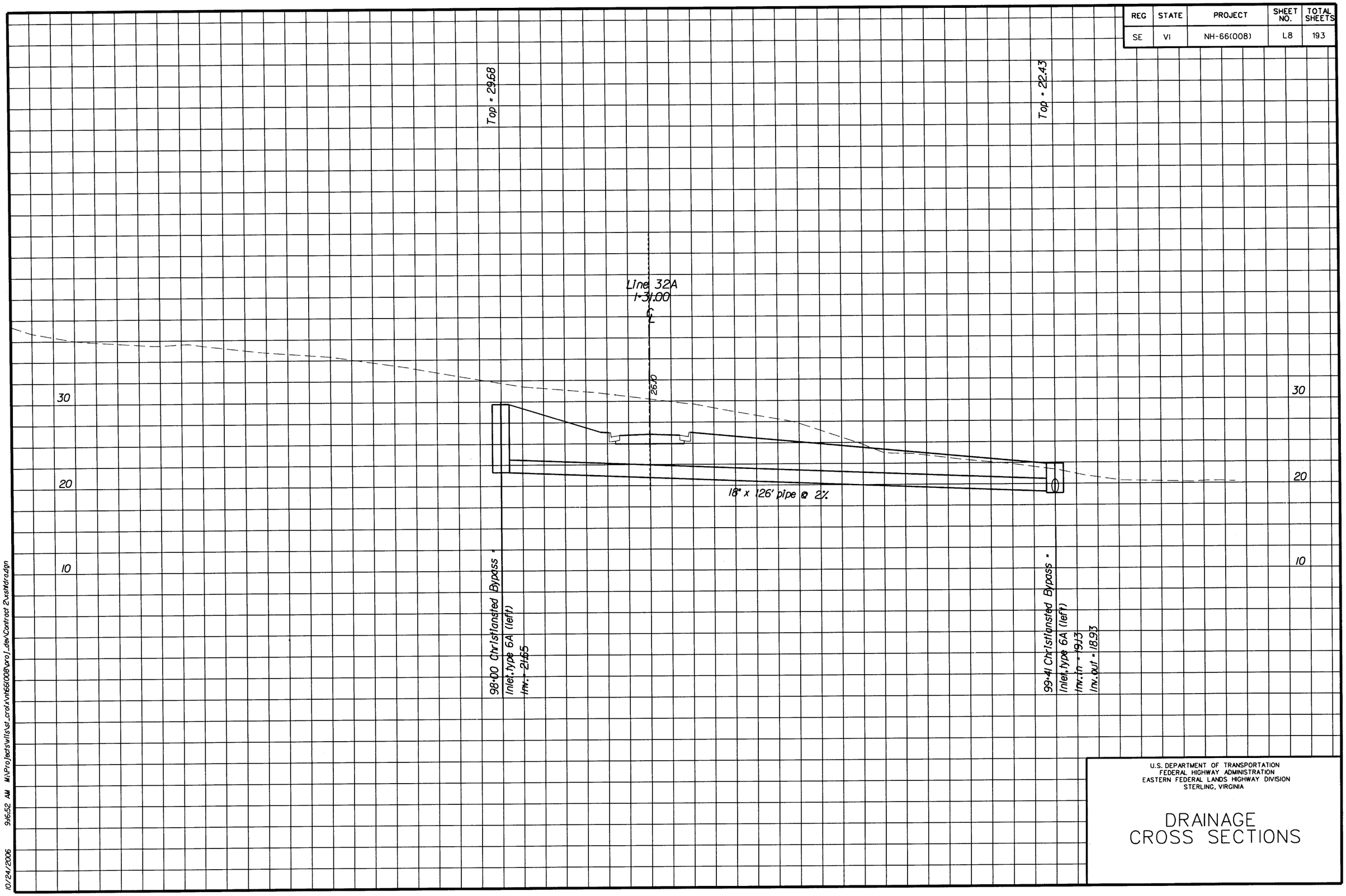

U.S. DEPARTMENT OF TRANSPORTATION
FEDERAL HIGHWAY ADMINISTRATION
EASTERN FEDERAL LANDS HIGHWAY DIVISION
STERLING, VIRGINIA

DRAINAGE CROSS SECTIONS

10/24/2006 9:16:52 AM M:\Projects\vils\st_croix\nh66(008)\proj_dev\Contract 2\xshldra.dgn

REG	STATE	PROJECT	SHEET NO.	TOTAL SHEETS
SE	VI	NH-66(008)	M1	193

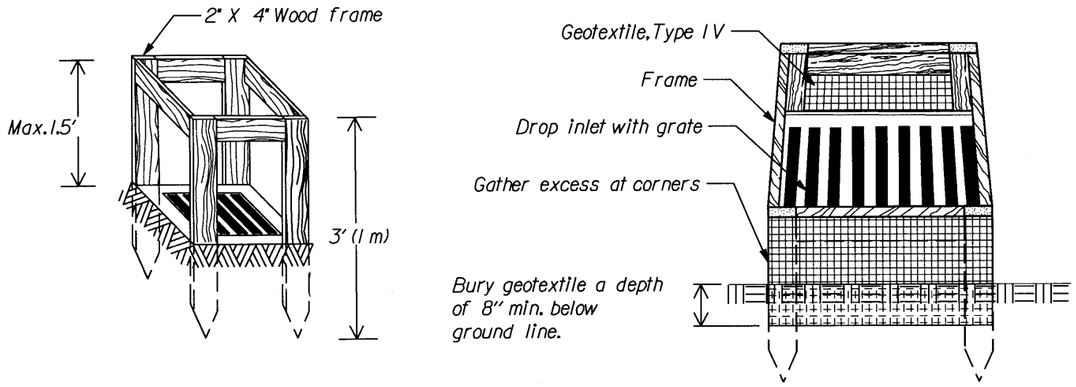

SILT FENCE DROP INLET PROTECTION (TYPE A)

Note: Use Type A inlet protection in sump locations only.

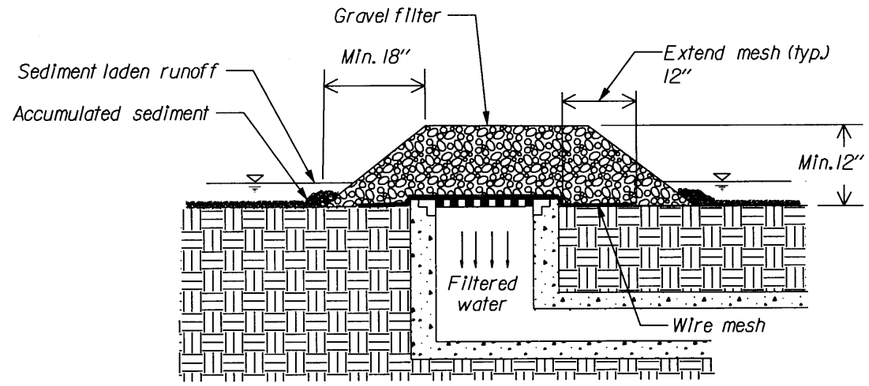

GRAVEL AND WIRE MESH DROP INLET PROTECTION (TYPE B)

Note: Use Type B inlet protection only in sump locations where heavy concentrated flows are not expected. Do not use where ponding around the structure might cause inconvenience or damage.

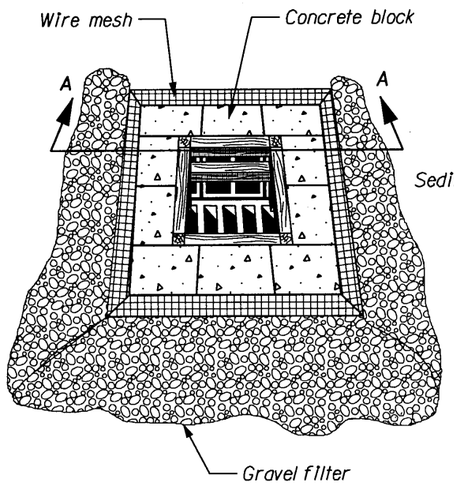

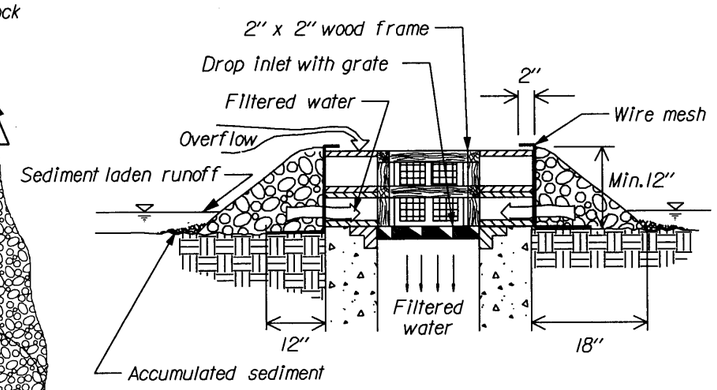

SECTION A-A

BLOCK AND GRAVEL DROP INLET PROTECTION (TYPE C)

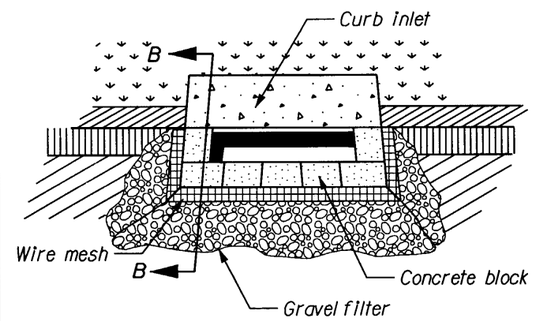

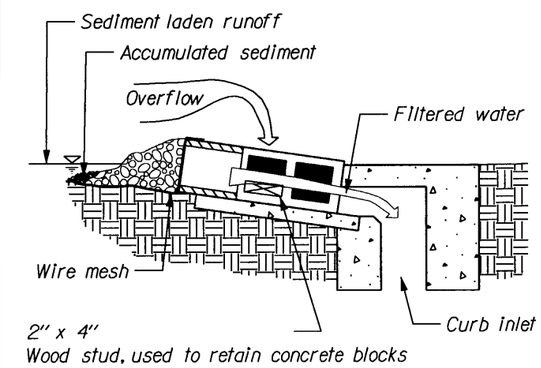

SECTION B-B

CURB INLET PROTECTION, BLOCK AND GRAVEL (TYPE D)

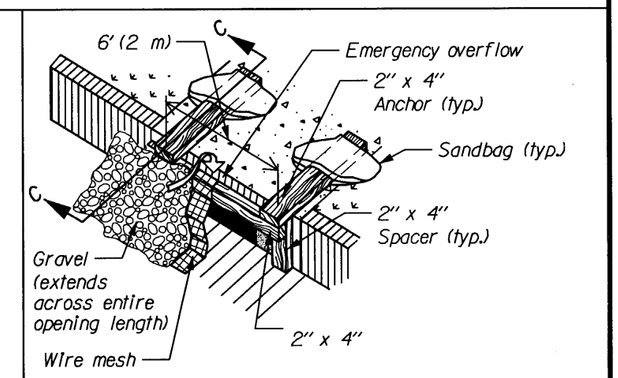

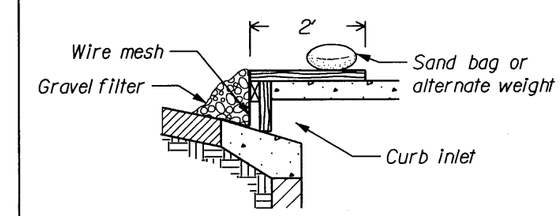

SECTION C-C

CURB INLET PROTECTION, WOODEN WEIR (TYPE E)

General Notes:

1. For gravel filters use 2" - 3" diameter coarse aggregate.
2. Use wire mesh with 1/2" x 1/2" openings.

U.S. DEPARTMENT OF TRANSPORTATION
FEDERAL HIGHWAY ADMINISTRATION
EASTERN FEDERAL LANDS HIGHWAY DIVISION

STANDARD

TEMPORARY INLET PROTECTION

(not to scale)

STANDARD APPROVED FOR USE XX/XX

REVISED: XX/XX

STANDARD 157-2

10/18/2006 6:50:13 AM M:\Projects\vils\st_crolx\nh66(008)proj_dev\Contract 2\details\Details\V2.dgn

REG	STATE	PROJECT	SHEET NO.	TOTAL SHEETS
SE	VI	NH-66(008)	M2	193

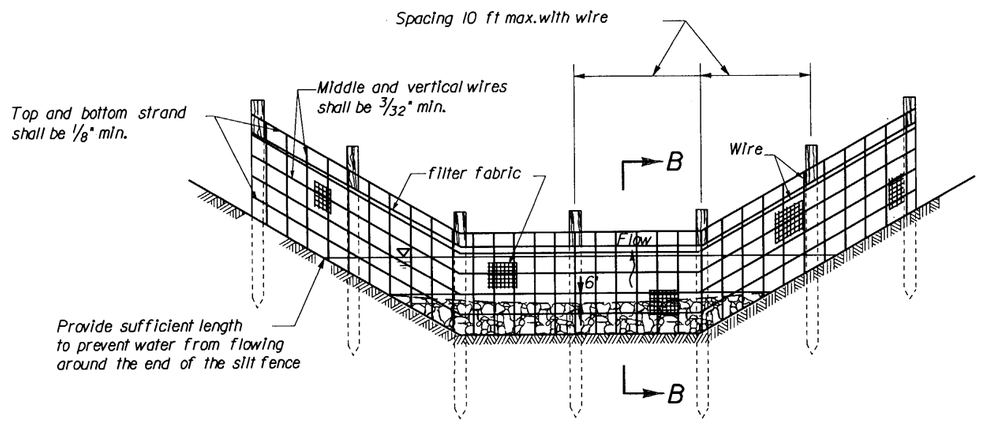

WIRE-BACKED SILT FENCE CHECK DAM
(See note 2)

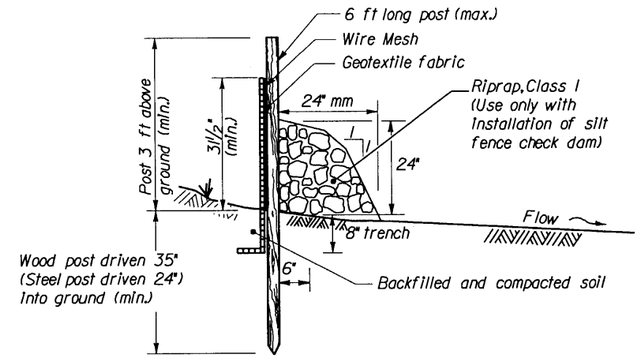

SECTION B-B

NOTES:

1. Use silt fence check dam installation for low flow conditions only when specified on Erosion Control Plan.
2. Alternate pre-assembled silt fence options will be allowed as long as specified minimums are satisfied. Follow manufacturer's information for installation procedures.
3. Wire mesh shall be a minimum of 32 inches in width and shall have a minimum of 6 line wires with 12 inch stay spacing.
4. Filter fabric shall be a minimum of 45 inches in width and shall be fastened adequately to the wire as directed by the CO.
5. Steel post shall be 60 inches minimum in height and be of the self-fastener angle steel type.
6. Wood post shall be 70 inches minimum in height and 3 inches in diameter.
7. Extend wire and fabric into trench.

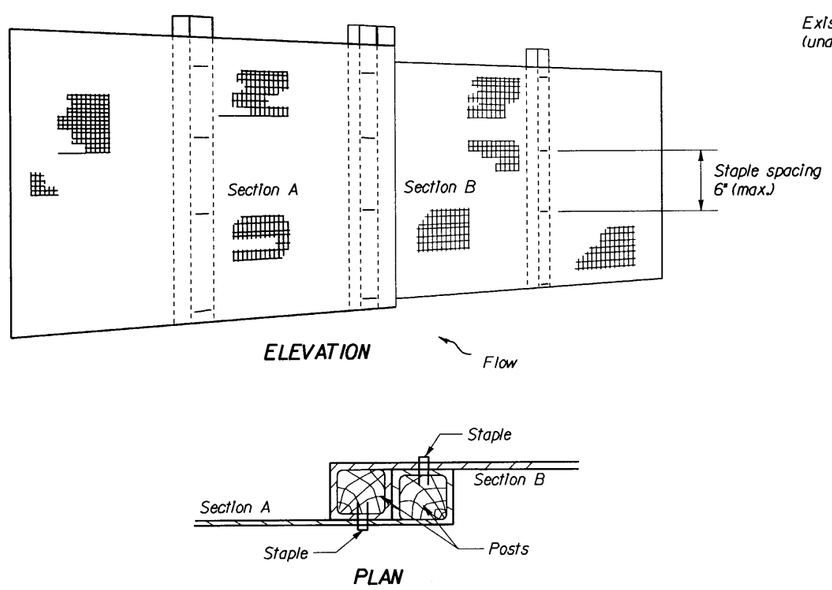

ELEVATION

PLAN

JOINING TWO ADJACENT SILT FENCE SECTIONS

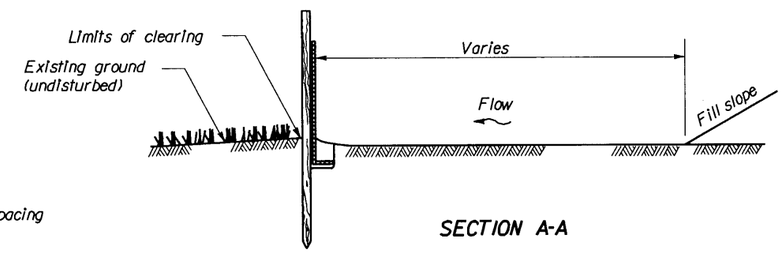

SECTION A-A

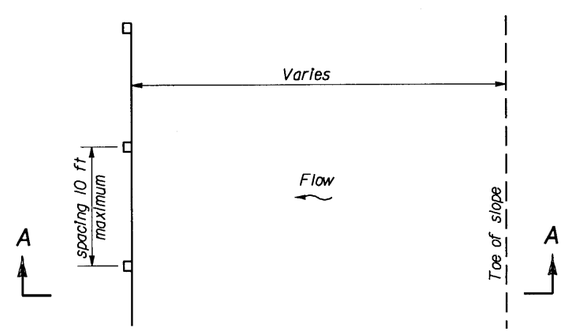

PLAN

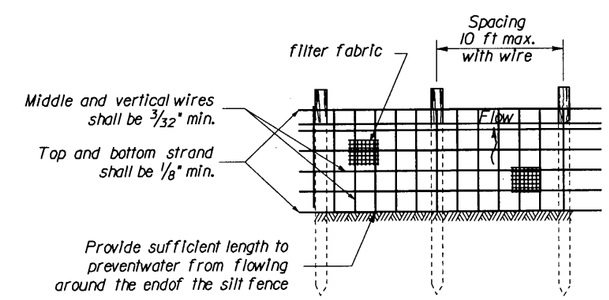

ELEVATION

WIRE-BACKED SILT FENCE INSTALLATION AT TOE OF FILL

NO SCALE

U.S. DEPARTMENT OF TRANSPORTATION
FEDERAL HIGHWAY ADMINISTRATION
EASTERN FEDERAL LANDS HIGHWAY DIVISION

DETAIL

WIRE-BACKED SILT FENCE

DETAIL APPROVED FOR USE --/----

REVISED: 6/99

DETAIL E157-2

10/23/2006 10:10:33 AM M:\Projects\vils\st_crolx\nh66(008)proj_dev\Contract 2\details\Details\V2.dgn

REG	STATE	PROJECT	SHEET NO.	TOTAL SHEETS
SE	VI	NH-66(008)	M3	193

SLOPE DRAINS

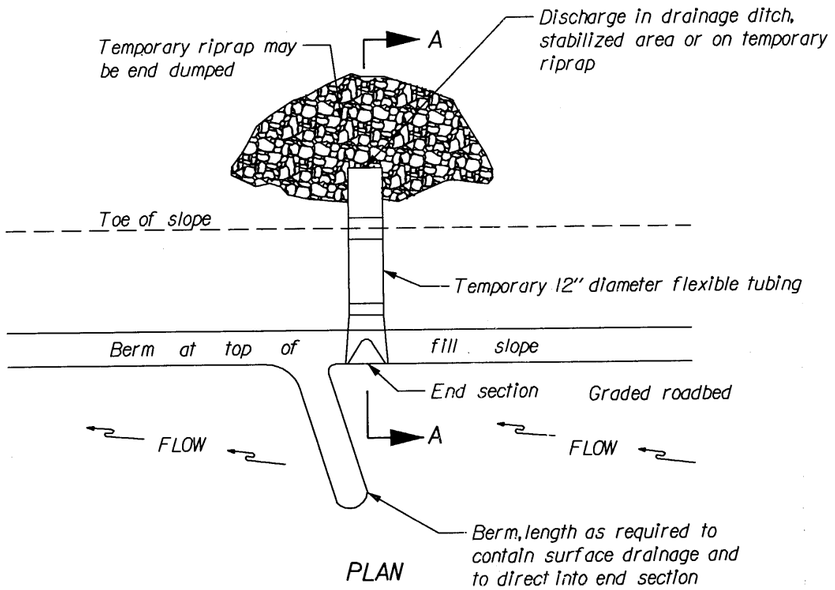

PLAN

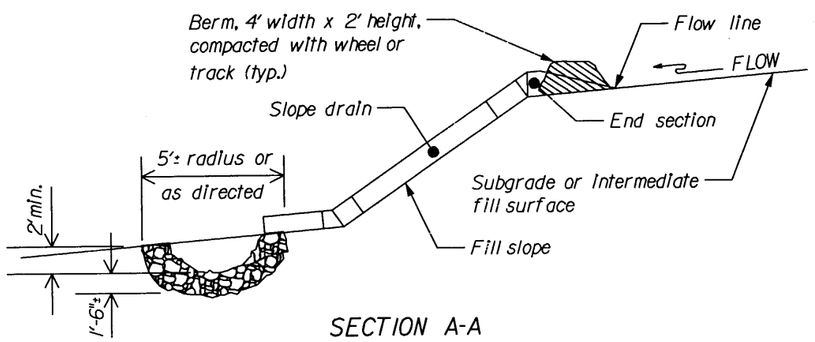

SECTION A-A

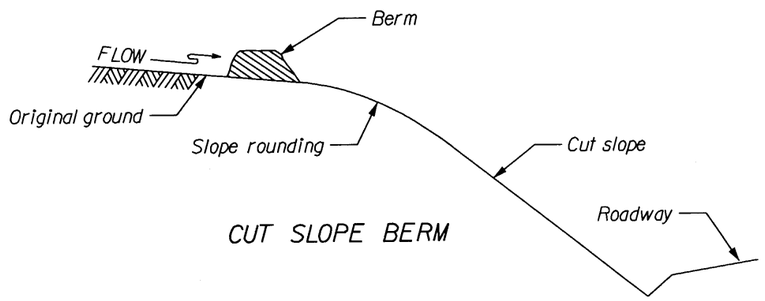

CUT SLOPE BERM

PLASTIC LINED WATERWAY

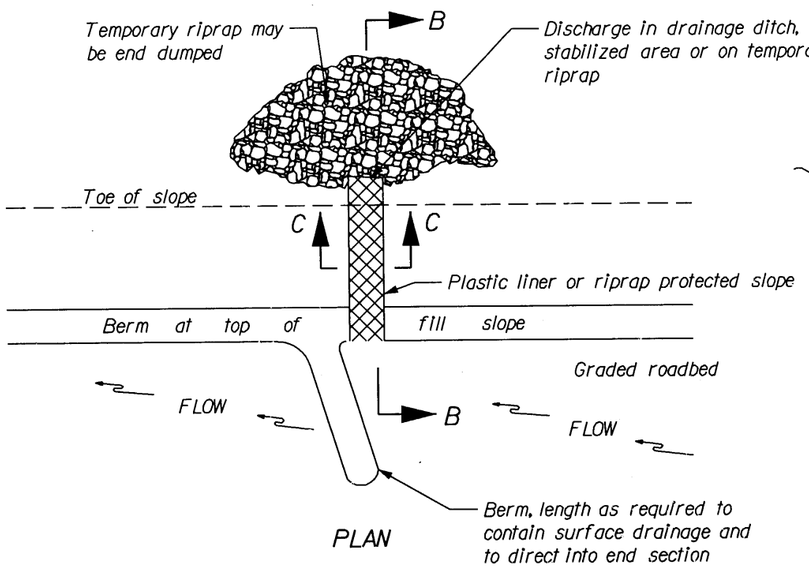

PLAN

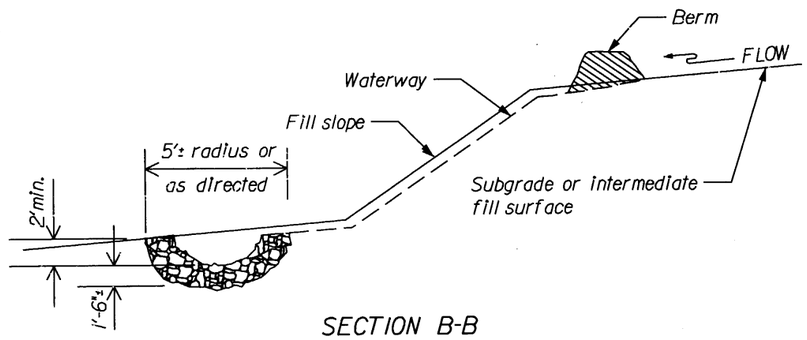

SECTION B-B

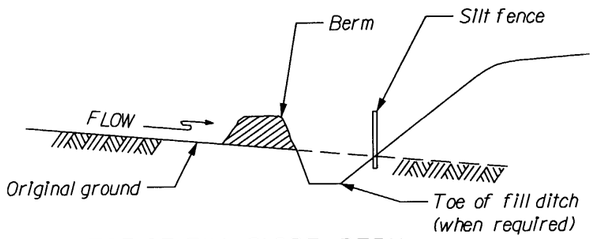

TOE-OF-FILL SLOPE BERM

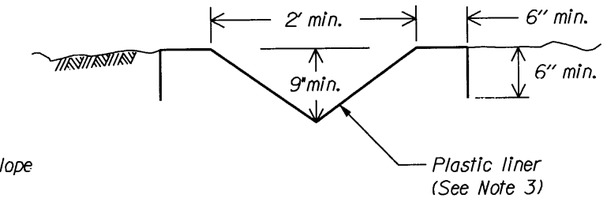

SECTION C-C

Notes:

1. Use temporary slope drains (berms, drains, and riprap) as the embankment is constructed. Use spacings as shown on the Erosion Control Plans or as designated by the CO. Place all slope drains at the end of each work shift. Use slope drains until the slopes are permanently stabilized.
2. Construct temporary berms at the top of all erodible cut slopes as shown on the Erosion Control Plans or as designated by the CO. Use check dams to reduce the runoff velocity when existing grades are steep.
3. Do not use transverse or longitudinal joints in plastic liner. Plastic liner is not required for rock embankments.
4. Use toe-of-fill slope berms to divert offsite runoff away from disturbed areas.
5. Seed and mulch all cut slope berms and toe-of-fill berms immediately after berm construction.
6. Use Class 2 temporary riprap.

(not to scale)

U.S. DEPARTMENT OF TRANSPORTATION
FEDERAL HIGHWAY ADMINISTRATION
EASTERN FEDERAL LANDS HIGHWAY DIVISION

STANDARD

TEMPORARY EROSION CONTROL BERMS, SLOPE DRAINS AND LINED WATERWAYS

STANDARD APPROVED FOR USE XX/XX

REVISED: XX/XX

STANDARD 157-7

10/18/2006 6:55:12 AM M:\Projects\vlis\st_crolx\nh66(008)proj_dev\Contract 2\details\Details\2.dgn

REG	STATE	PROJECT	SHEET NO.	TOTAL SHEETS
SE	VI	NH-66(008)	M4	193

STABILIZED CONSTRUCTION ENTRANCE

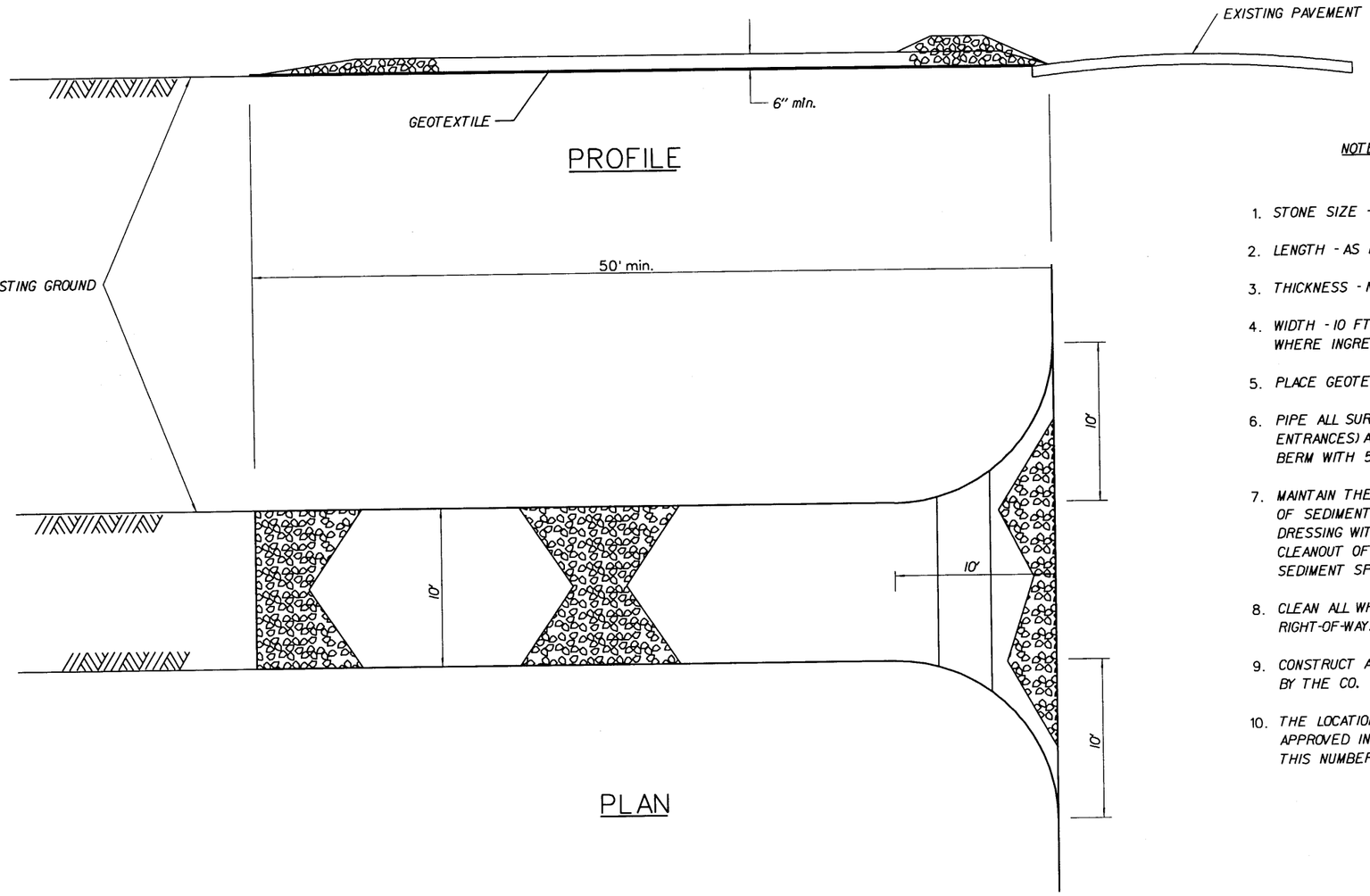

NOTES

1. STONE SIZE - USE AASHTO M43, SIZE NO.3 AGGREGATE
2. LENGTH - AS REQUIRED, BUT NOT LESS THAN 50 FEET.
3. THICKNESS - NOT LESS THAN 6", LIGHT DUTY. NOT LESS THAN 10", HEAVY DUTY.
4. WIDTH - 10 FT MINIMUM, BUT NOT LESS THAN THE FULL WIDTH AT THE POINT WHERE INGRESS AND EGRESS OCCURS.
5. PLACE GEOTEXTILE, TYPE II, OVER THE ENTIRE AREA PRIOR TO PLACING OF STONE.
6. PIPE ALL SURFACE WATER (FLOWING OR DIVERTED TOWARD CONSTRUCTION ENTRANCES) ACROSS THE ENTRANCE. IF PIPING IS IMPRACTICAL, A MOUNTABLE BERM WITH 5:1 SLOPES WILL BE PERMITTED.
7. MAINTAIN THE ENTRANCE IN A CONDITION WHICH WILL PREVENT TRACKING OR FLOWING OF SEDIMENT ONTO PUBLIC RIGHT-OF-WAY. THIS MAY REQUIRE PERIODIC TOP DRESSING WITH ADDITIONAL STONE AS CONDITIONS DEMAND AND REPAIR AND/OR CLEANOUT OF ANY MEASURES USED TO TRAP SEDIMENT. IMMEDIATELY REMOVE ALL SEDIMENT SPILLED, DROPPED, WASHED, OR TRACKED ONTO PUBLIC RIGHT-OF-WAY.
8. CLEAN ALL WHEELS TO REMOVE SEDIMENT PRIOR TO ENTERING ONTO PUBLIC RIGHT-OF-WAY.
9. CONSTRUCT AT LOCATIONS SPECIFIED IN THE CONTRACT OR WHERE DIRECTED BY THE CO.
10. THE LOCATION AND NUMBER OF STABILIZED CONSTRUCTION ENTRANCES WILL BE APPROVED IN ADVANCE BY THE CO. ANY ENTRANCES INSTALLED OVER AND BEYOND THIS NUMBER WILL BE AT THE CONTRACTOR'S EXPENSE.

NO SCALE

STABILIZED CONSTRUCTION ENTRANCE

DETAIL 157-A

10/18/2006 6:48:14 AM M:\Projects\vils\st_crolx\nh66(008)proj_dev\Contract 2\details\Details\2.dgn

REG	STATE	PROJECT	SHEET NO.	TOTAL SHEETS
SE	VI	NH-66(008)	M5	193

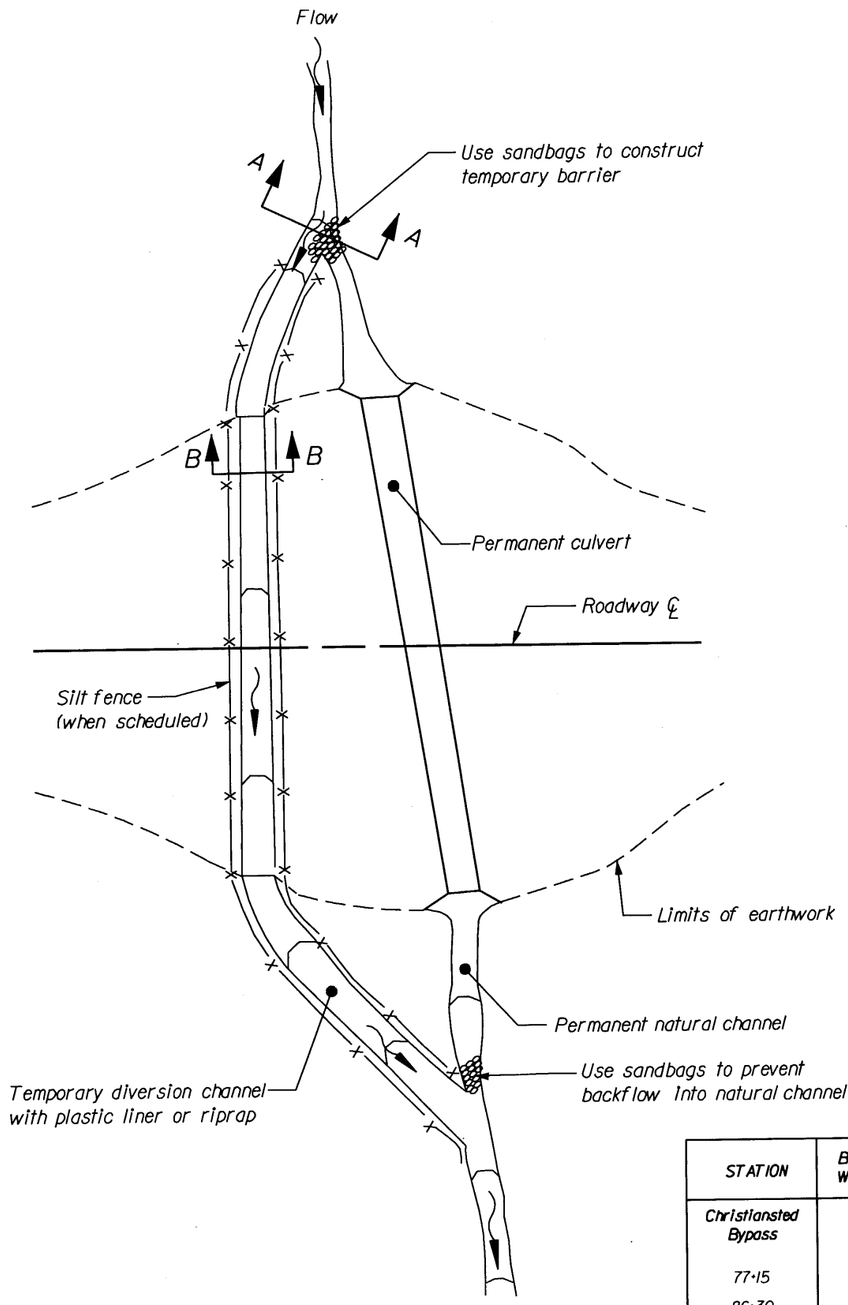

PLAN

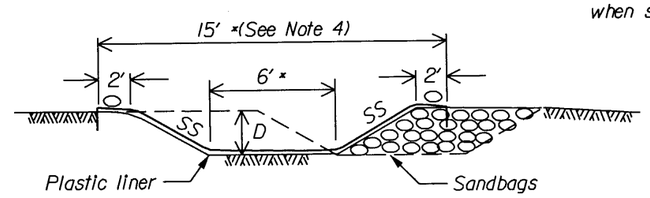

SECTION A-A

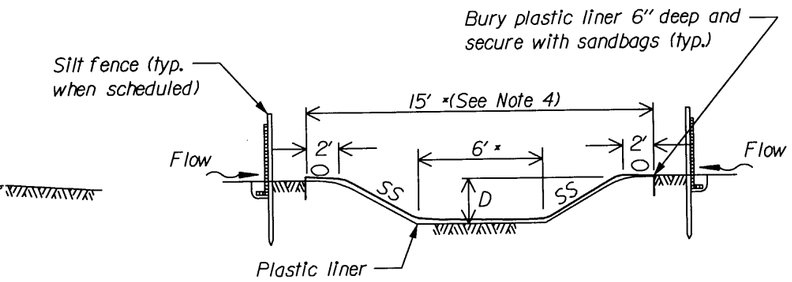

SECTION B-B

PLASTIC LINED DIVERSION CHANNEL

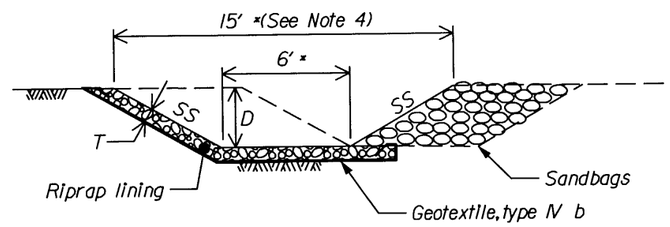

SECTION A-A

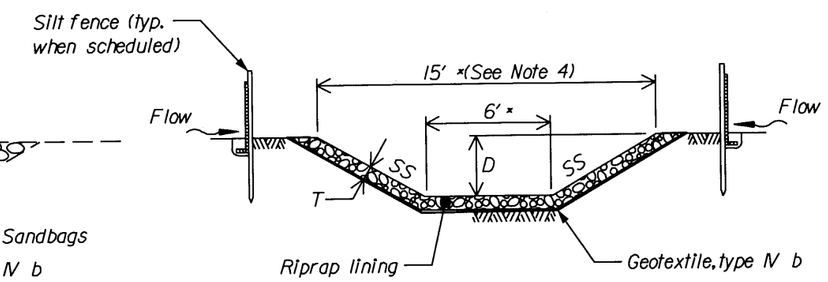

SECTION B-B

RIPRAP LINED DIVERSION CHANNEL

STATION	Bottom Width	Depth (D)	Side Slope (SS)	Top Width	Riprap Class	Thickness (T)
Christiansted Bypass						
77+15	18'	1.0'	3:1	24'	3	1.75'
86+30	6'	1.0'	2:1	10'	3	1.75'
96+40	6'	1.0	2:1	10'	2	1.0'

Notes:

1. Use plastic liner or riprap along the entire length and width of the temporary diversion channel.
2. Construct channel at a minimum grade of 0.5 percent.
3. Do not construct with longitudinal joints if using a plastic liner. Bury the upstream edge of the liner a minimum of 6" deep and secure with riprap or sandbags.
4. At Station 77+15 use a top width of 24 feet and a base width of 18 feet.
5. See Table (this sheet) for riprap class and channel dimensions.

(not to scale)

U.S. DEPARTMENT OF TRANSPORTATION
FEDERAL HIGHWAY ADMINISTRATION
FEDERAL LANDS HIGHWAY

DETAIL

TEMPORARY DIVERSION CHANNELS

STANDARD APPROVED FOR USE --/----

REVISED:

DETAIL 157-B

10/18/2006 5:15:21 PM M:\Projects\vi\st_cro\x\vi66\008\proj_dev\Contract 2\details\Details\2.dgn

REG	STATE	PROJECT	SHEET NO.	TOTAL SHEETS
SE	VI	NH-66(008)	M6	193

DEPTH (d)	
Riprap Class	Depth (d)-(In)
1	12
2	18
3	24
4	30
5	42
6	48

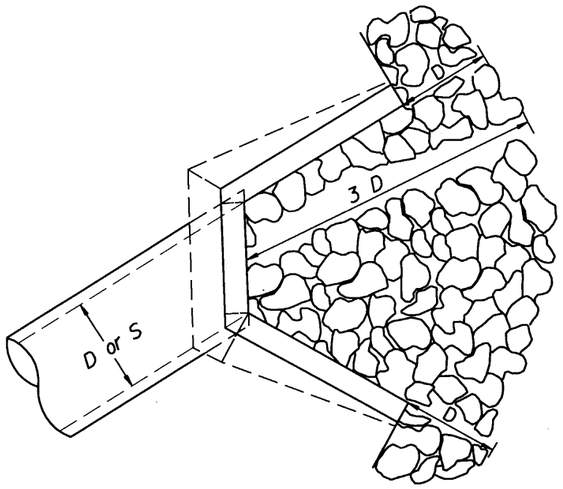

PLAN

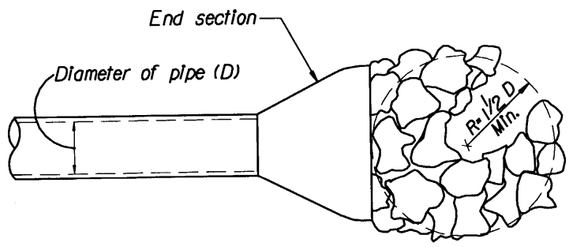

PLAN

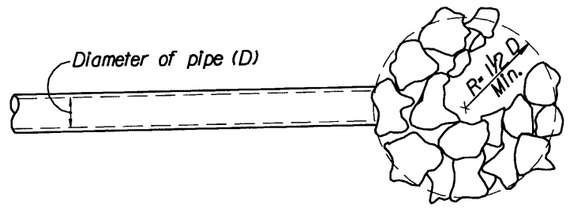

PLAN

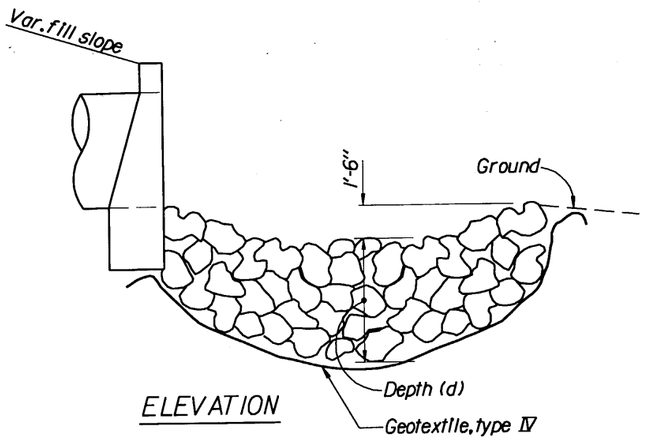

ELEVATION

CULVERT WITH HEADWALL

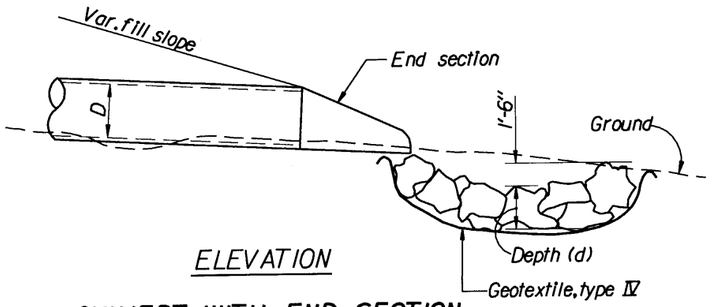

ELEVATION

CULVERT WITH END SECTION

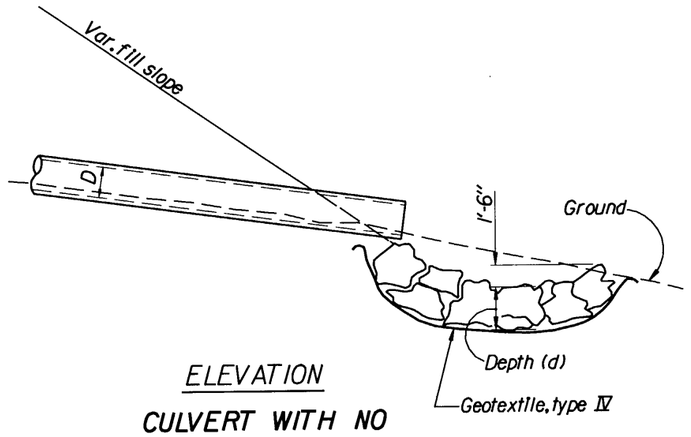

ELEVATION

CULVERT WITH NO END TREATMENT

NOT TO SCALE

NOTE:

For arch or elliptical pipes, use equivalent diameter for (D) dimension

U.S. DEPARTMENT OF TRANSPORTATION
FEDERAL HIGHWAY ADMINISTRATION
EASTERN FEDERAL LANDS HIGHWAY DIVISION

DETAIL

LOOSE RIPRAP AT CULVERT

DETAIL APPROVED FOR USE --/----

REVISED:

DETAIL E251-1

10/18/2006 6:56:37 AM M:\Projects\vi\st_croix\nh66(008)\proj_dev\Contract 2\details\Details\2.dgn

REG	STATE	PROJECT	SHEET NO.	TOTAL SHEETS
SE	VI	NH-66(008)	M7	193

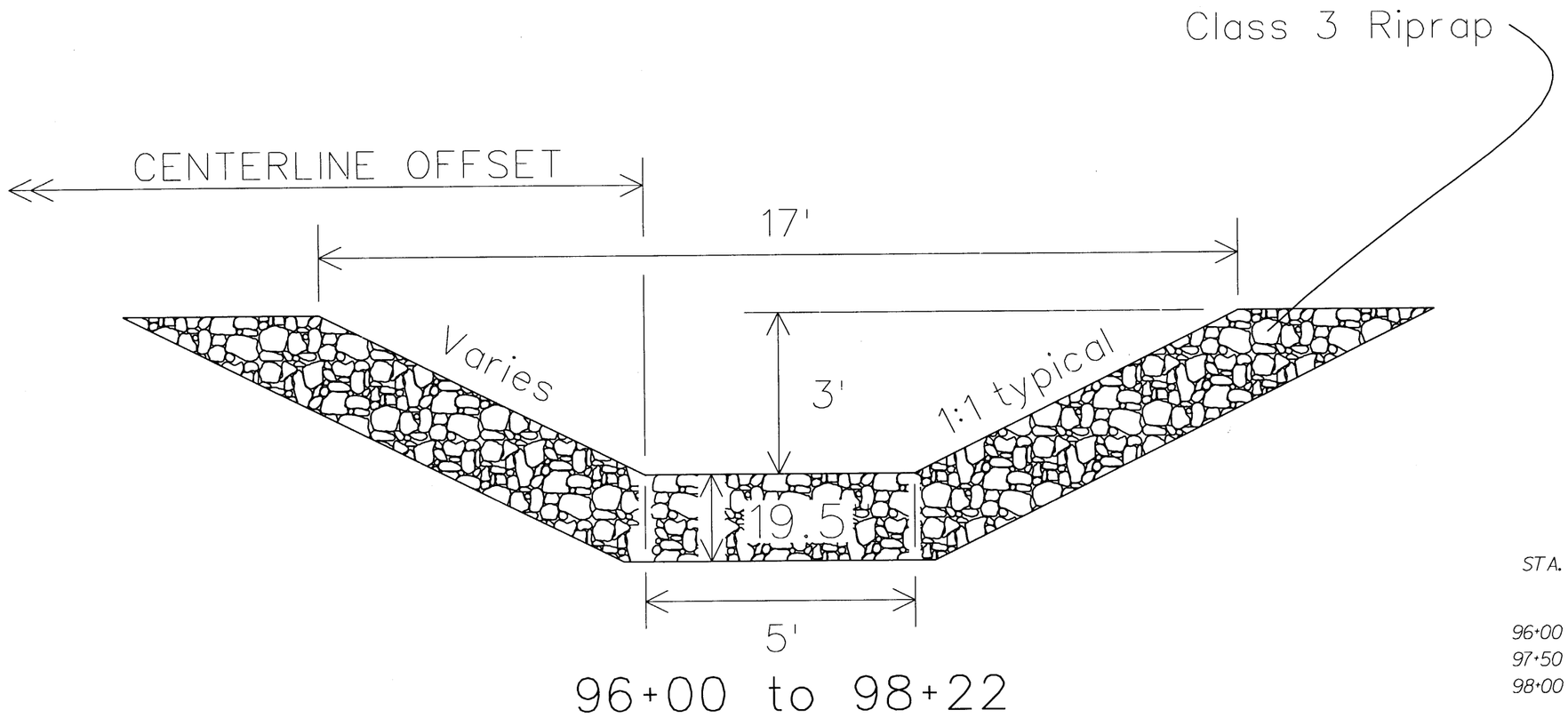

96+00 to 98+22

STA.	CENTERLINE OFFSET	DITCH ELEV.
96+00	44.106	40.35
97+50	45.731	25.30
98+00	46.000	23.90

NOTES:

1. LEFT SIDE SLOPE VARIES AS NECESSARY BETWEEN THE EDGE OF SHOULDER AND BOTTOM OF DITCH.

2. RIGHT SIDE SLOPE VARIES TO 2:1 AT 98+00.

NOT TO SCALE

U.S. DEPARTMENT OF TRANSPORTATION
FEDERAL HIGHWAY ADMINISTRATION
EASTERN FEDERAL LANDS HIGHWAY DIVISION

DETAIL

RIPRAP CHANNELS

DETAIL APPROVED FOR USE --/----

DETAIL 251-A

10/18/2006 7:04:48 AM M:\Projects\vlis\st_crox\nh66(008)proj_dev\Contract 2\details\Details\2.dgn

REG	STATE	PROJECT	SHEET NO.	TOTAL SHEETS
SE	VI	NH-66(008)	M8	193

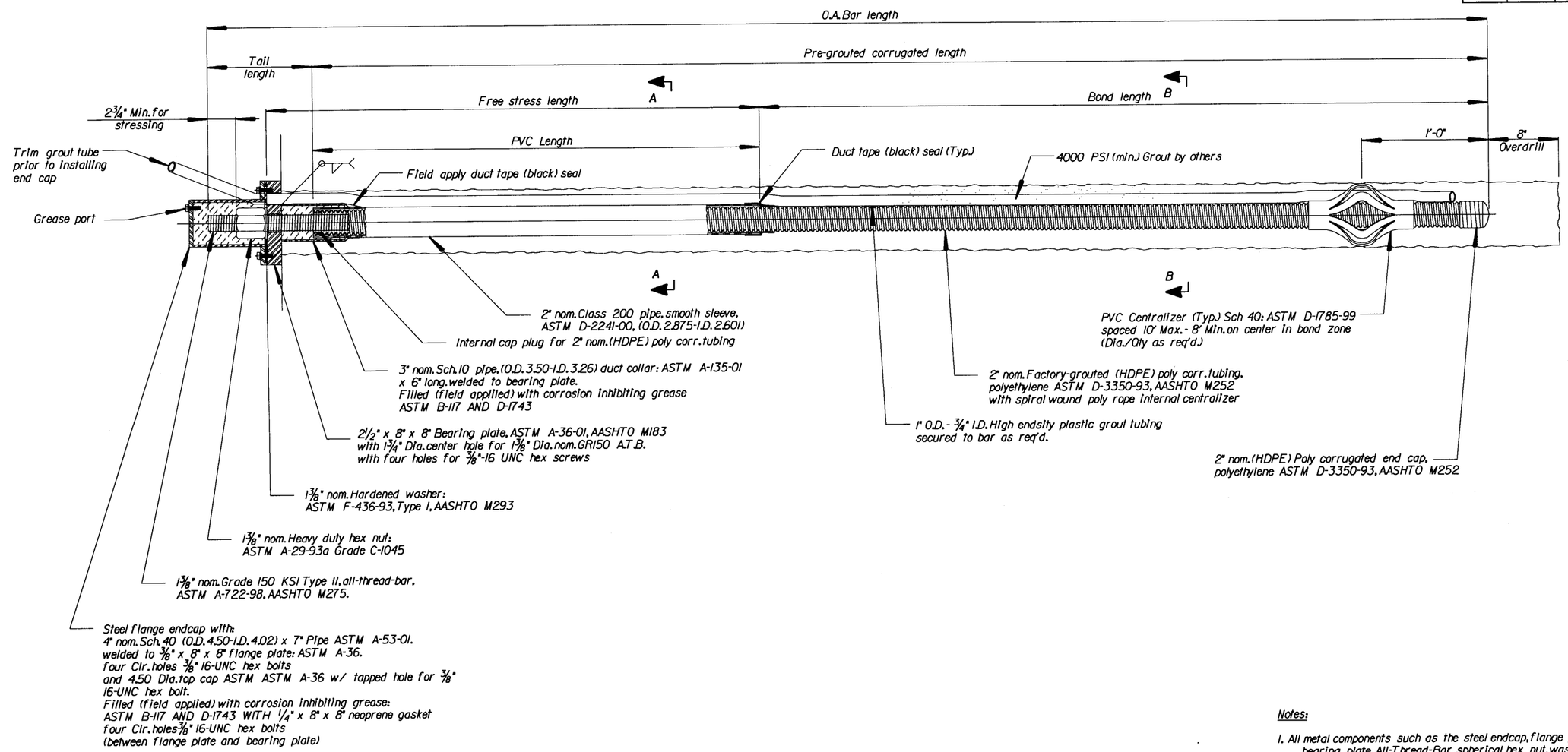

1⅜" \ ALL-TRHEAD-BAR ANCHOR

(Concrete anchor block not shown)

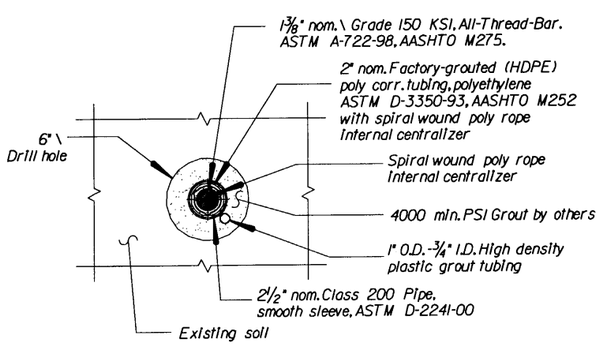

SECTION A-A

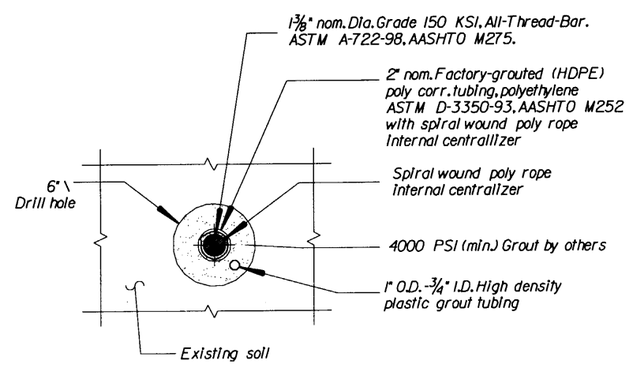

SECTION B-B

Notes:

1. All metal components such as the steel endcap, flange plate, bolts, threaded screw, bearing plate, All-Thread-Bar, spherical hex nut, washer, and duct collar shall be galvanized in accordance with ASTM A-153. All metal components shall be mechanically cleaned prior to galvanization.
2. Encase the outer end of the all-thread-bar and hex nut with corrosion preventive grease. The grease shall conform to ASTM B-117 and ASTM D-1743.
3. Install the All-Thread-Bar Anchor System in accordance with manufacturer's recommendations. Submit shop drawings, specifications, and installation procedures of the All-Thread-Bar Anchor System to CO for approval prior to purchase.
4. See "GENERAL NOTES" on "ANCHOR BLOCK REBAR DETAILS" sheet for additional grout information. Submit specifications, mix design, placing procedure and testing method of the grout to CO for approval.

U.S. DEPARTMENT OF TRANSPORTATION
FEDERAL HIGHWAY ADMINISTRATION
EASTERN FEDERAL LANDS HIGHWAY DIVISION

DETAIL

CHRISTIANSTED BY-PASS

ANCHOR DETAILS

DETAIL APPROVED FOR USE --/----

REVISED:

DETAIL 256-A

10/17/2006 4:44:31 PMM:\Projects\vils\st_croix\nh66(008)\proj_dev\Contract 2\details\ANCHORDETS.dgn

REG	STATE	PROJECT	SHEET NO.	TOTAL SHEETS
SE	VI	NH-66(008)	M9	193

Notes:

1. All metal components such as steel endcap, flange plate, bolts, threaded screw, bearing plate, All-Thread-Bar, spherical hex nut, washer, and duct collar shall be galvanized in accordance with ASTM A-153. All metal components shall be mechanically cleaned prior to galvanization.
2. Encase the outer end of the all-thread-bar and hex nut with corrosion preventive grease. The grease shall conform to ASTM B-117 and ASTM D-1743.
3. Install the All-Thread-Bar Rock Bolt System in accordance with manufacturer's recommendations. Submit shop drawings, specifications, and installation procedures of the All-Thread-Bar Rock Bolt System to CO for approval prior to purchase.
4. See "GENERAL NOTES" on "ANCHOR BLOCK REBAR DETAILS" sheet for additional grout information. Submit specifications, mix design, placing procedure and testing method of the grout to CO for approval.

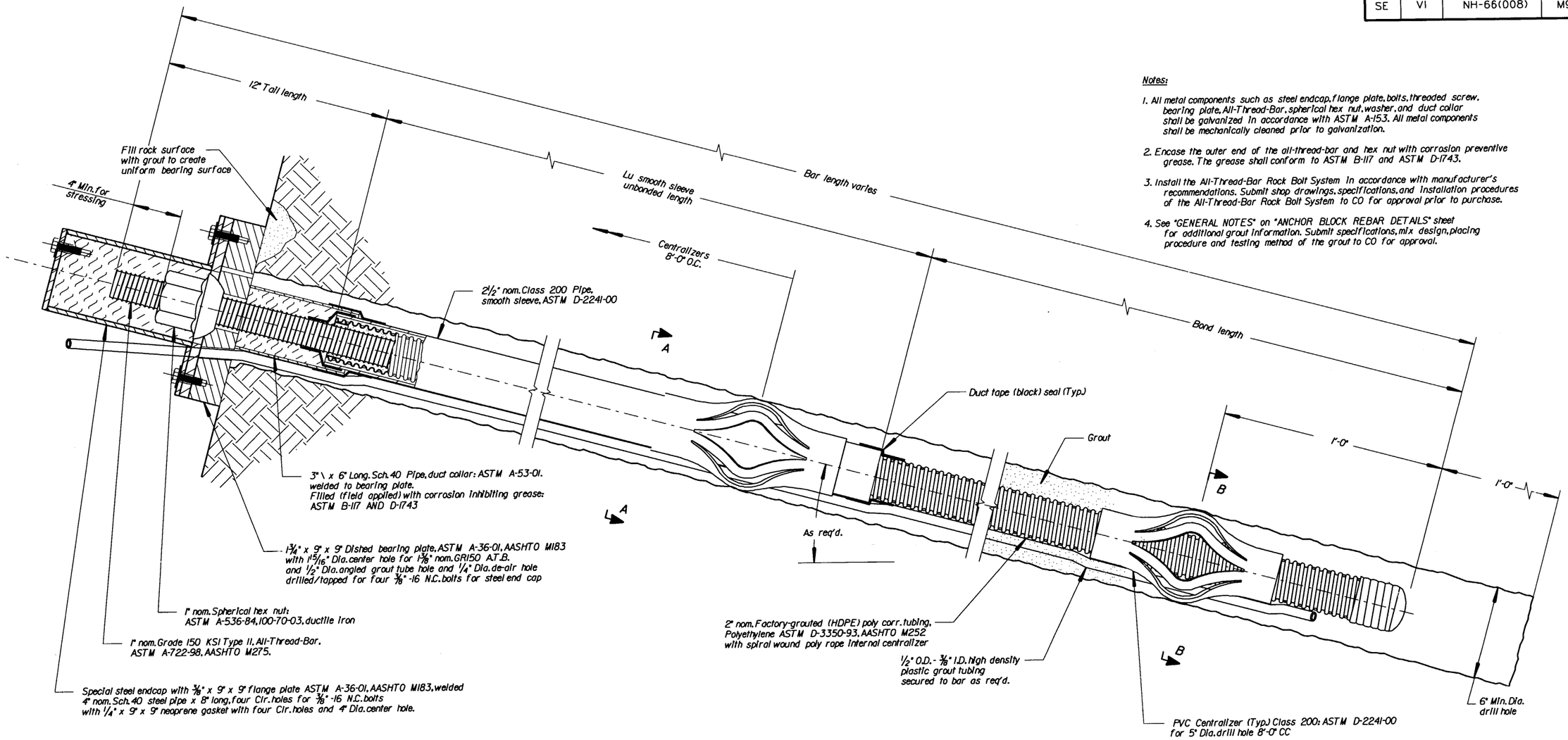

1" \ ALL-THREAD-BAR ROCKBOLT DETAIL

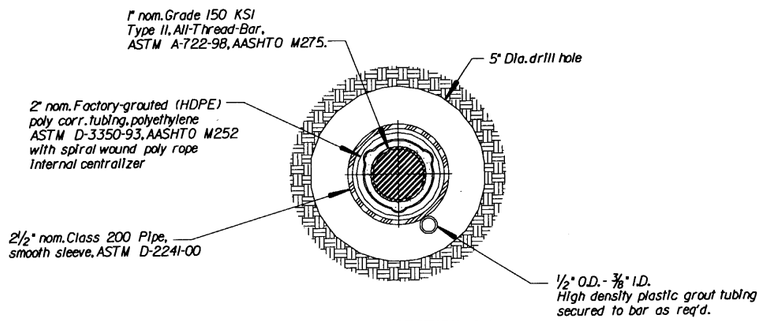

SECTION A-A

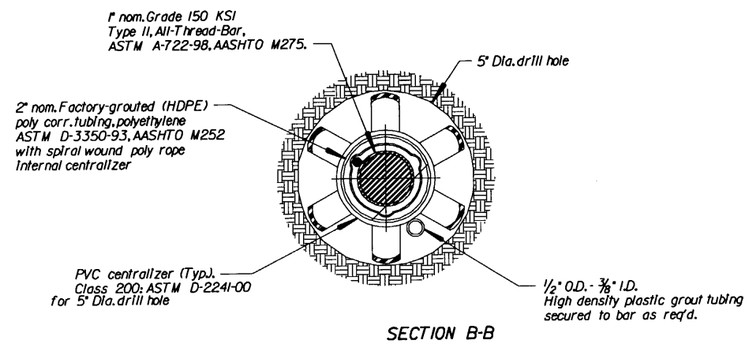

SECTION B-B

U.S. DEPARTMENT OF TRANSPORTATION
FEDERAL HIGHWAY ADMINISTRATION
EASTERN FEDERAL LANDS HIGHWAY DIVISION

DETAIL

CHRISTIANSTED BY-PASS

ROCK BOLT DETAILS

DETAIL APPROVED FOR USE --/----

REVISED:

DETAIL 259-A

10/19/2006 9:16:11 AM M:\Projects\vlis\st_croix\nh66(008)proj_dev\Contract 2\details\RockBolt Dets.dgn

REG	STATE	PROJECT	SHEET NO.	TOTAL SHEETS
SE	VI	NH-66(008)	M10	193

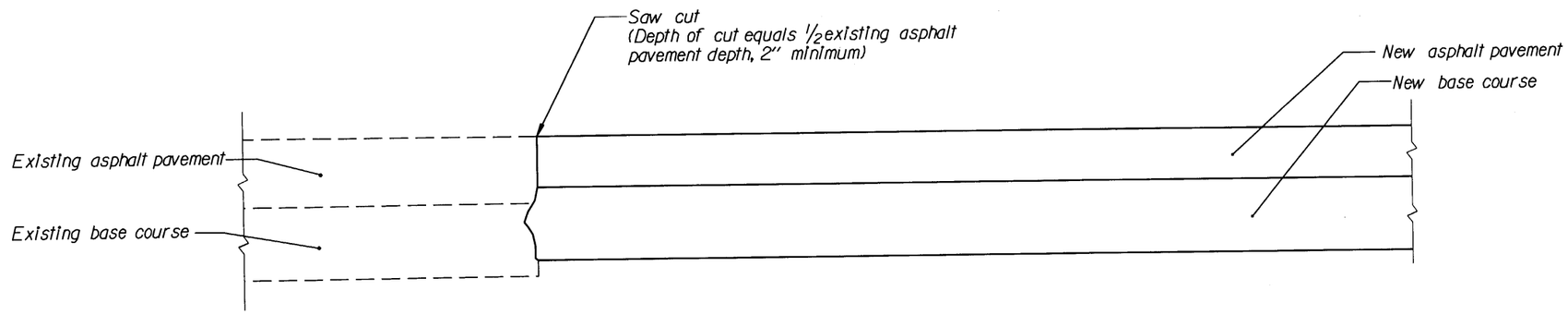

NEW PAVEMENT

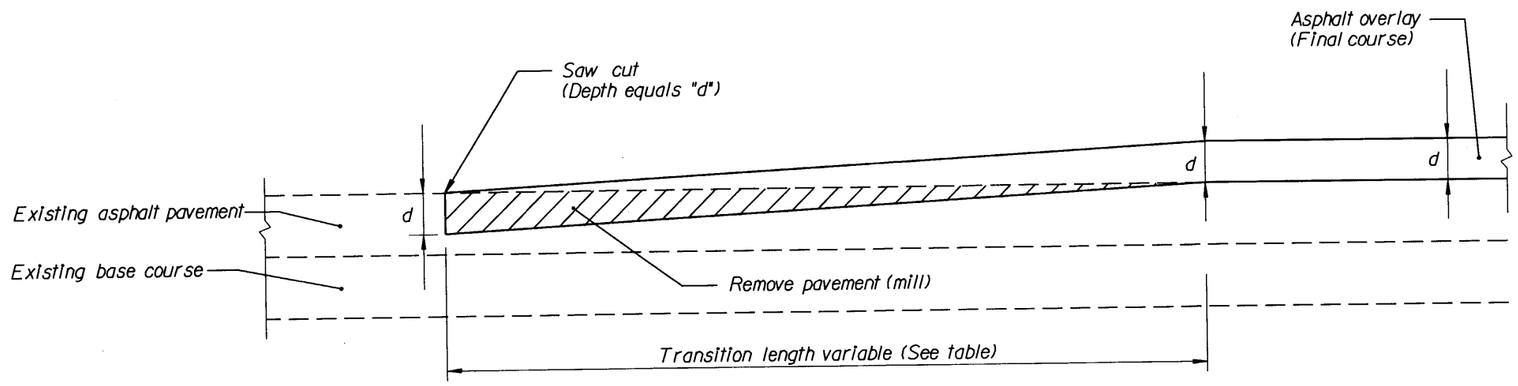

OVERLAY

d - Inches	Transition Length - Feet
1	20
1.5	30
2	40
2.5	50
3	60

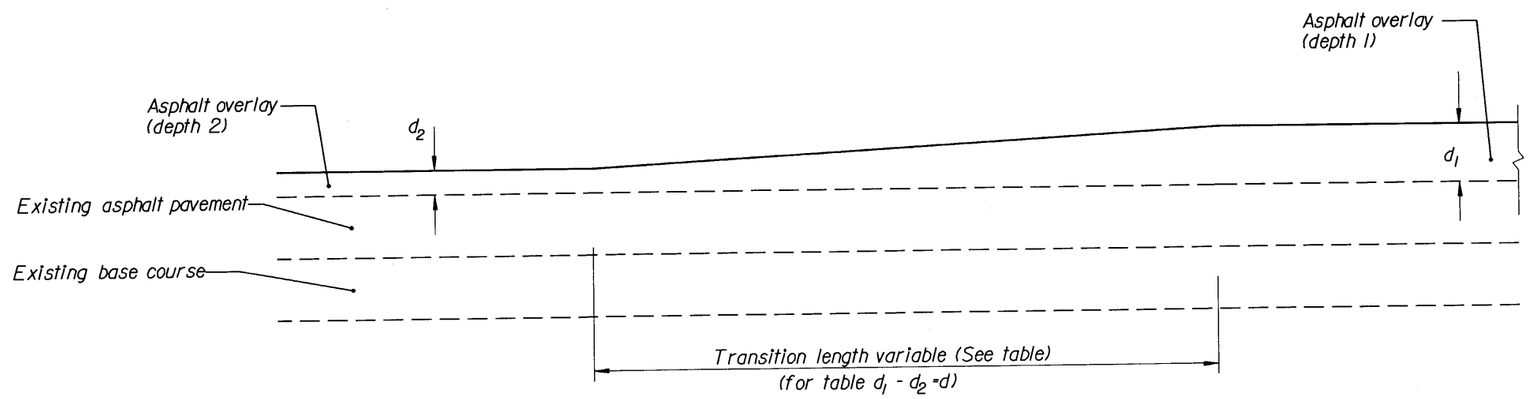

OVERLAY - DEPTH TRANSITIONS

NOT TO SCALE

U.S. DEPARTMENT OF TRANSPORTATION
FEDERAL HIGHWAY ADMINISTRATION
EASTERN FEDERAL LANDS HIGHWAY DIVISION

DETAIL

PAVEMENT TRANSITIONS

DETAIL APPROVED FOR USE --/----

REVISED:

DETAIL E401-1

10/18/2006 7:10:22 AM M:\Projects\vlis\st_crox\nh66(008)proj_dev\Contract 2\details\Details\V2.dgn

REG	STATE	PROJECT	SHEET NO.	TOTAL SHEETS
SE	VI	NH-66(008)	M11	193

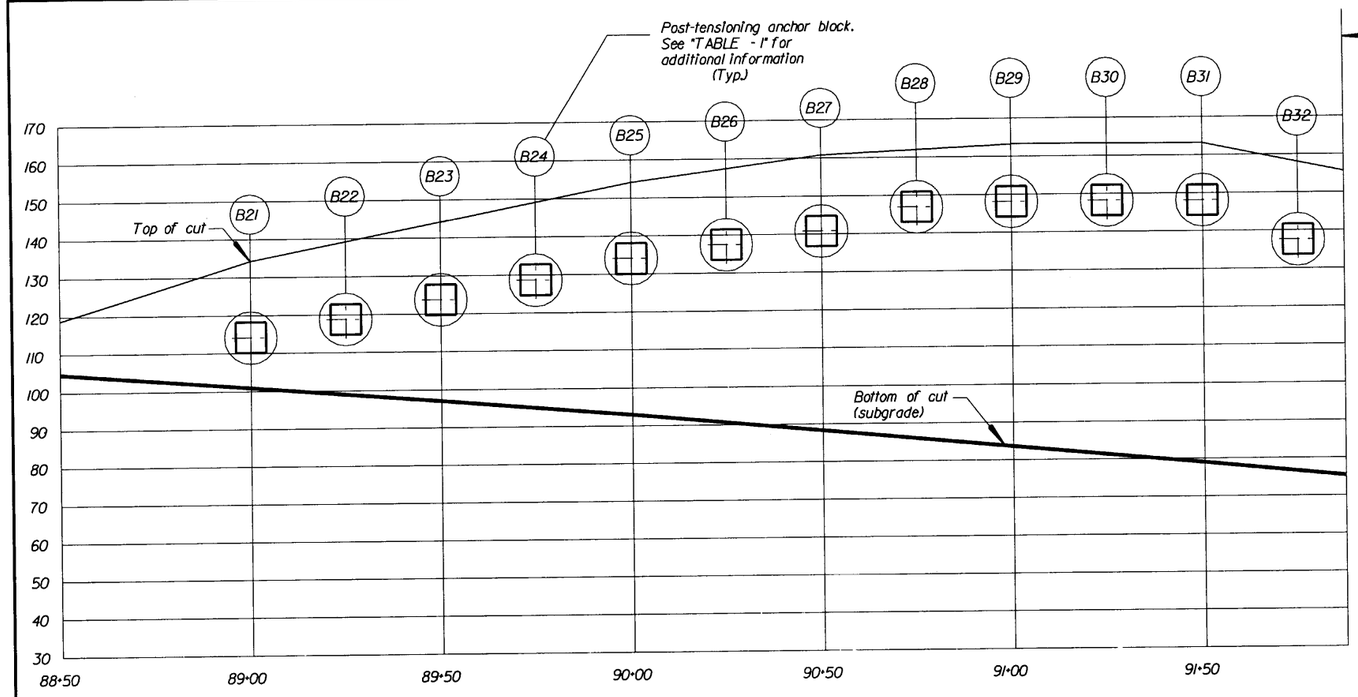

TABLE I

ANCHOR	STATION	ELEVATION (FEET)	CONCRETE BLOCK	ANCHOR BAR LENGTH	ANCHOR BOND LENGTH	MAXIMUM JACKING FORCE
B21	89+00	114.25	8'-0" x 8'-0" x 1'-9"	38'-0"	15'-0"	133
B22	89+25	118.75	8'-0" x 8'-0" x 1'-9"	38'-0"	15'-0"	133
B23	89+50	124.00	8'-0" x 8'-0" x 1'-9"	38'-0"	15'-0"	133
B24	89+75	128.75	8'-0" x 8'-0" x 1'-9"	38'-0"	15'-0"	133
B25	90+00	134.00	8'-0" x 8'-0" x 1'-9"	38'-0"	15'-0"	133
B26	90+25	137.50	8'-0" x 8'-0" x 1'-9"	38'-0"	15'-0"	133
B27	90+50	140.75	8'-0" x 8'-0" x 1'-9"	38'-0"	15'-0"	133
B28	90+75	147.00	8'-0" x 8'-0" x 1'-9"	38'-0"	15'-0"	133
B29	91+00	148.00	8'-0" x 8'-0" x 1'-9"	38'-0"	15'-0"	133
B30	91+25	148.75	8'-0" x 8'-0" x 1'-9"	38'-0"	15'-0"	150
B31	91+50	148.00	8'-0" x 8'-0" x 1'-9"	38'-0"	15'-0"	133
B32	91+75	137.50	8'-0" x 8'-0" x 1'-9"	38'-0"	15'-0"	133
B33	92+00	132.50	8'-0" x 8'-0" x 1'-9"	38'-0"	15'-0"	133
B34	92+25	126.50	8'-0" x 8'-0" x 1'-9"	38'-0"	15'-0"	133
B35	92+50	120.50	8'-0" x 8'-0" x 1'-9"	38'-0"	15'-0"	133
B36	92+75	112.50	8'-0" x 8'-0" x 1'-9"	38'-0"	10'-0"	133
B37	93+00	104.50	8'-0" x 8'-0" x 1'-9"	38'-0"	10'-0"	133
B38	93+25	96.00	8'-0" x 8'-0" x 1'-9"	38'-0"	10'-0"	133
B39	93+50	87.25	8'-0" x 8'-0" x 1'-9"	28'-0"	10'-0"	133
B40	93+75	80.00	8'-0" x 8'-0" x 1'-9"	28'-0"	10'-0"	133
B41	94+00	80.00	8'-0" x 8'-0" x 1'-9"	28'-0"	10'-0"	133
B42	94+25	75.00	8'-0" x 8'-0" x 1'-9"	28'-0"	10'-0"	133
B43	94+50	70.00	8'-0" x 8'-0" x 1'-9"	28'-0"	10'-0"	133
B44	94+75	64.00	8'-0" x 8'-0" x 1'-9"	28'-0"	10'-0"	133
B45	95+00	58.00	8'-0" x 8'-0" x 1'-9"	28'-0"	10'-0"	133

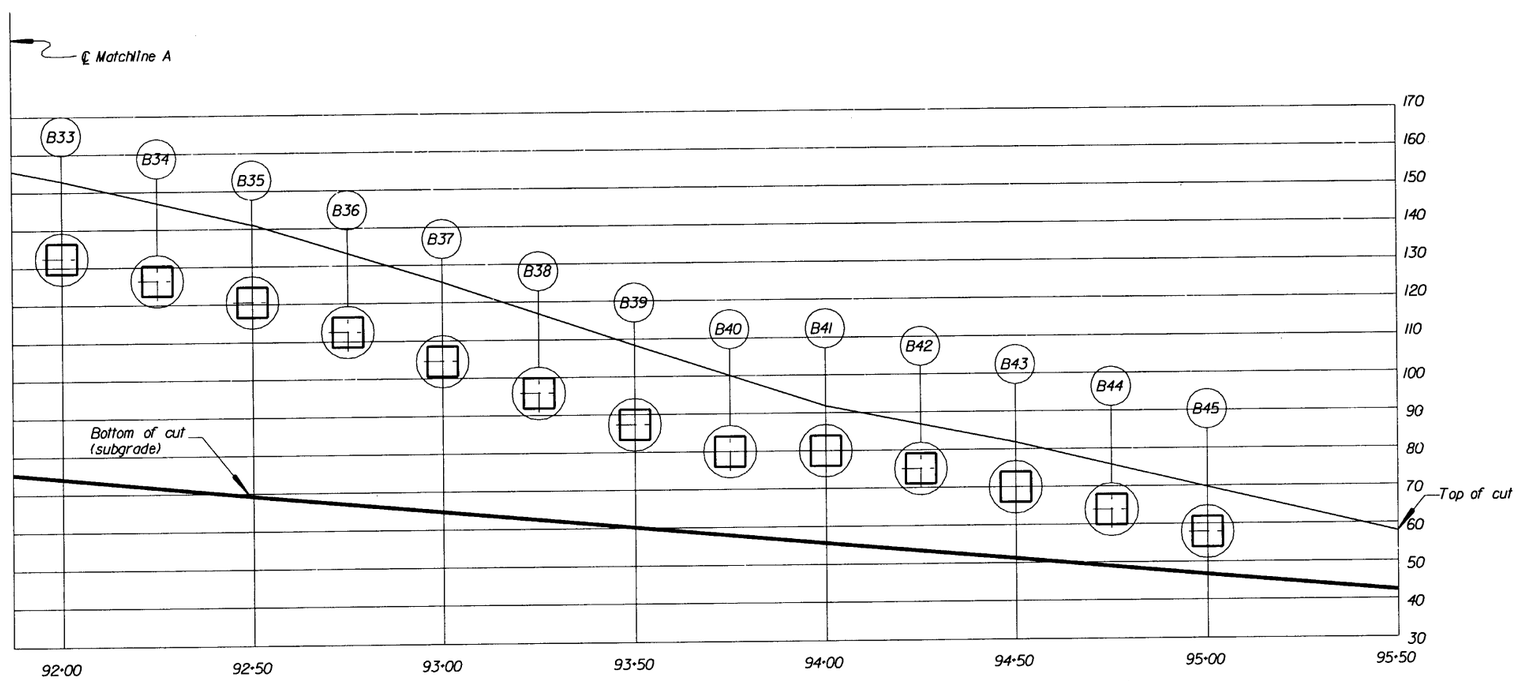

LEFT PROFILE OF CUT SLOPE - B

U.S. DEPARTMENT OF TRANSPORTATION
FEDERAL HIGHWAY ADMINISTRATION
EASTERN FEDERAL LANDS HIGHWAY DIVISION

DETAIL

CHRISTIANSTED BY-PASS
ANCHOR BLOCKS AT
CUT SLOPE - B (LEFT).
STA. 88+50 TO STA. 95+50

DETAIL APPROVED FOR USE --/----

REVISED:

DETAIL
552-B

10/23/2006 10:33:05 M:\Projects\vi\s\st_croix\nh66(008)\proj_dev\Contract 2\details\cut options.dgn

REG	STATE	PROJECT	SHEET NO.	TOTAL SHEETS
SE	VI	NH-66(008)	M12	193

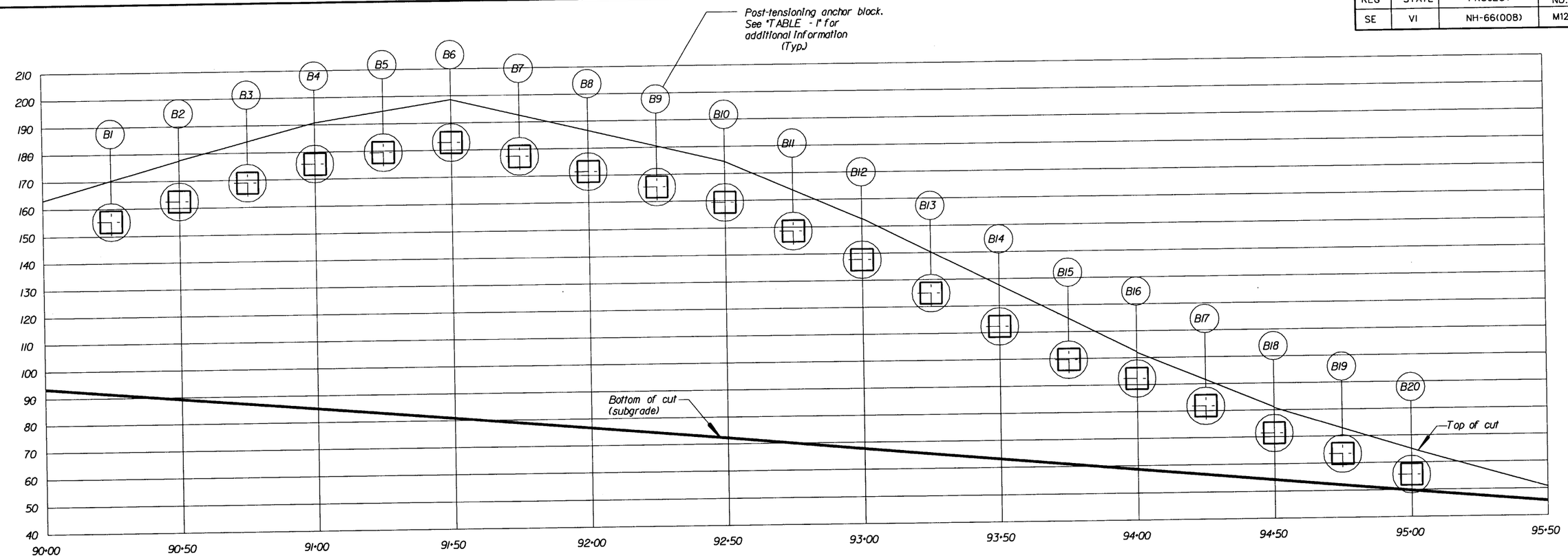

RIGHT PROFILE OF CUT SLOPE - B

TABLE I

ANCHOR	STATION	ELEVATION (FEET)	CONCRETE BLOCK	ANCHOR BAR LENGTH	ANCHOR BOND LENGTH	MAXIMUM JACKING FORCE
B1	90+25	155.50	8'-0" x 8'-0" x 1'-9"	38'-0"	15'-0"	133
B2	90+50	162.50	8'-0" x 8'-0" x 1'-9"	38'-0"	15'-0"	133
B3	90+75	169.00	8'-0" x 8'-0" x 1'-9"	38'-0"	15'-0"	133
B4	91+00	175.75	8'-0" x 8'-0" x 1'-9"	38'-0"	15'-0"	133
B5	91+25	179.50	8'-0" x 8'-0" x 1'-9"	38'-0"	15'-0"	133
B6	91+50	183.00	8'-0" x 8'-0" x 1'-9"	38'-0"	15'-0"	150
B7	91+75	177.50	8'-0" x 8'-0" x 1'-9"	38'-0"	15'-0"	133
B8	92+00	171.50	8'-0" x 8'-0" x 1'-9"	38'-0"	15'-0"	133
B9	92+25	165.00	8'-0" x 8'-0" x 1'-9"	38'-0"	15'-0"	133
B10	92+50	159.50	8'-0" x 8'-0" x 1'-9"	38'-0"	15'-0"	133
B11	92+75	148.50	8'-0" x 8'-0" x 1'-9"	38'-0"	15'-0"	133
B12	93+00	137.50	8'-0" x 8'-0" x 1'-9"	38'-0"	15'-0"	133
B13	93+25	125.00	8'-0" x 8'-0" x 1'-9"	38'-0"	15'-0"	133
B14	93+50	112.50	8'-0" x 8'-0" x 1'-9"	28'-0"	10'-0"	133
B15	93+75	100.00	8'-0" x 8'-0" x 1'-9"	28'-0"	10'-0"	133
B16	94+00	92.50	8'-0" x 8'-0" x 1'-9"	28'-0"	10'-0"	133
B17	94+25	82.00	8'-0" x 8'-0" x 1'-9"	28'-0"	10'-0"	133
B18	94+50	71.50	8'-0" x 8'-0" x 1'-9"	28'-0"	10'-0"	133
B19	94+75	63.50	8'-0" x 8'-0" x 1'-9"	28'-0"	10'-0"	133
B20	95+00	55.50	8'-0" x 8'-0" x 1'-9"	28'-0"	10'-0"	133

U.S. DEPARTMENT OF TRANSPORTATION
FEDERAL HIGHWAY ADMINISTRATION
EASTERN FEDERAL LANDS HIGHWAY DIVISION

DETAIL

CHRISTIANSTED BY-PASS
ANCHOR BLOCKS AT
CUT SLOPE - B (RIGHT)
STA. 90+00 TO STA. 95+50

DETAIL APPROVED FOR USE --/----

REVISED:

DETAIL
552-B

10/17/2006 5:19:50 PM\:\Projects\vi1s\st_crol\nh66(008\proj_dev\Contract 2\details\cut options.dgn

REG	STATE	PROJECT	SHEET NO.	TOTAL SHEETS
SE	VI	NH-66(008)	M13	193

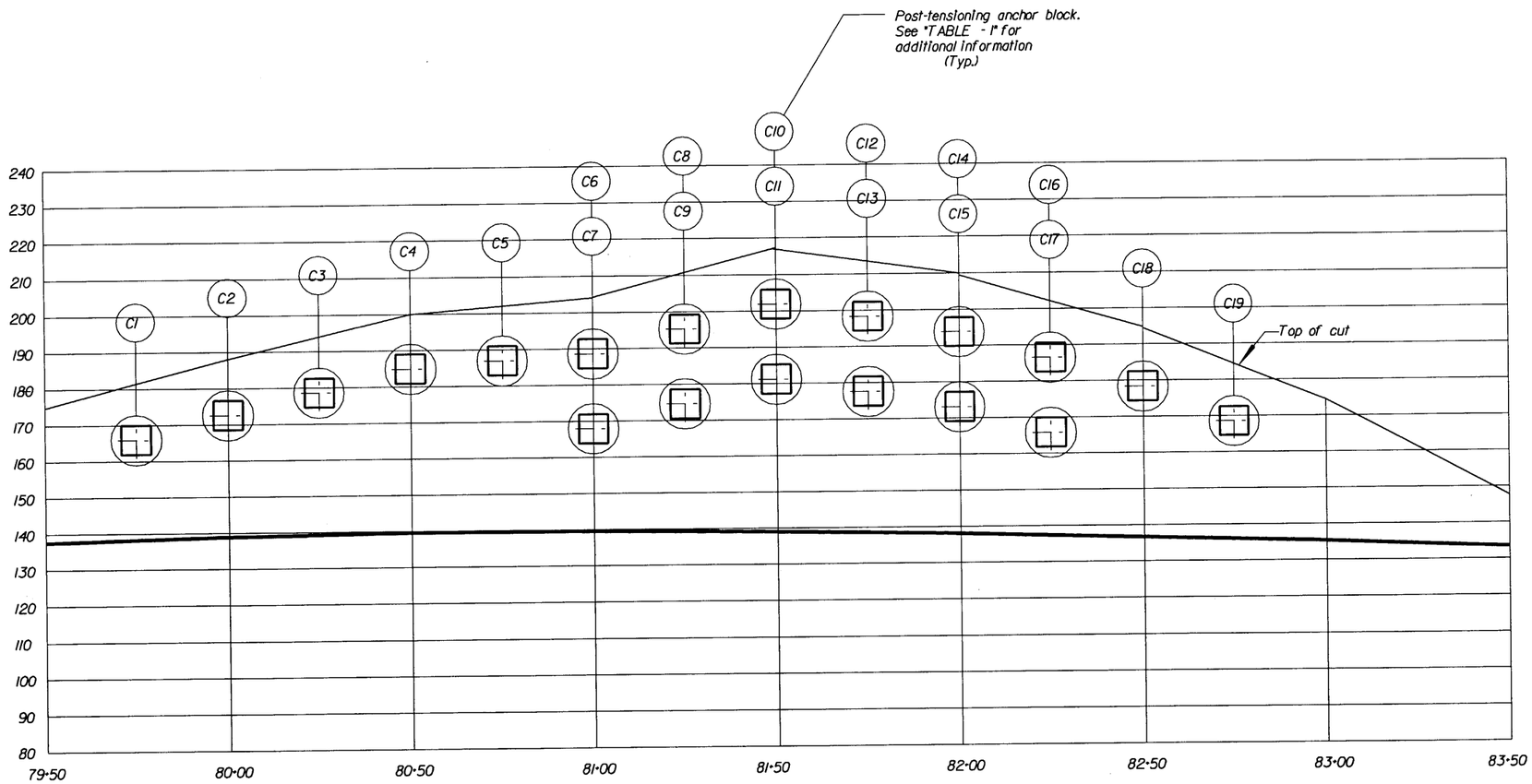

RIGHT PROFILE OF CUT SLOPE - C

TABLE I

ANCHOR	STATION	ELEVATION (FEET)	CONCRETE BLOCK	ANCHOR BAR LENGTH	ANCHOR BOND LENGTH	MAXIMUM JACKING FORCE
C1	79+75	166.00	8'-0" x 8'-0" x 1'-9"	43'-0"	20'-0"	133
C2	80+00	172.50	8'-0" x 8'-0" x 1'-9"	43'-0"	20'-0"	133
C3	80+25	178.50	8'-0" x 8'-0" x 1'-9"	43'-0"	20'-0"	133
C4	80+50	185.00	8'-0" x 8'-0" x 1'-9"	43'-0"	20'-0"	133
C5	80+75	187.00	8'-0" x 8'-0" x 1'-9"	43'-0"	20'-0"	150
C6	81+00	188.50	8'-0" x 8'-0" x 1'-9"	43'-0"	20'-0"	133
C7	81+00	168.00	8'-0" x 8'-0" x 1'-9"	43'-0"	20'-0"	133
C8	81+25	195.25	8'-0" x 8'-0" x 1'-9"	43'-0"	20'-0"	133
C9	81+25	174.50	8'-0" x 8'-0" x 1'-9"	43'-0"	20'-0"	133
C10	81+50	202.00	8'-0" x 8'-0" x 1'-9"	43'-0"	20'-0"	150
C11	81+50	181.20	8'-0" x 8'-0" x 1'-9"	43'-0"	20'-0"	133
C12	81+75	198.25	8'-0" x 8'-0" x 1'-9"	43'-0"	20'-0"	133
C13	81+75	177.60	8'-0" x 8'-0" x 1'-9"	43'-0"	20'-0"	133
C14	82+00	193.85	8'-0" x 8'-0" x 1'-9"	43'-0"	20'-0"	133
C15	82+00	173.00	8'-0" x 8'-0" x 1'-9"	43'-0"	20'-0"	133
C16	82+25	186.50	8'-0" x 8'-0" x 1'-9"	43'-0"	20'-0"	133
C17	82+25	166.00	8'-0" x 8'-0" x 1'-9"	43'-0"	20'-0"	133
C18	82+50	178.50	8'-0" x 8'-0" x 1'-9"	43'-0"	20'-0"	133
C19	82+75	168.50	8'-0" x 8'-0" x 1'-9"	43'-0"	20'-0"	133

U.S. DEPARTMENT OF TRANSPORTATION
FEDERAL HIGHWAY ADMINISTRATION
EASTERN FEDERAL LANDS HIGHWAY DIVISION

DETAIL

CHRISTIANSTED BY-PASS
ANCHOR BLOCKS AT
CUT SLOPE - C (RIGHT)
STA. 79+50 TO STA. 83+50

DETAIL APPROVED FOR USE --/----

REVISED:

DETAIL
552-C

10/17/2006 5:18:50 PM:\Projects\vi\st_croix\nh66(008)\pro_dev\Contract 2\details\cut options.dgn

REG	STATE	PROJECT	SHEET NO.	TOTAL SHEETS
SE	VI	NH-66(008)	M14	193

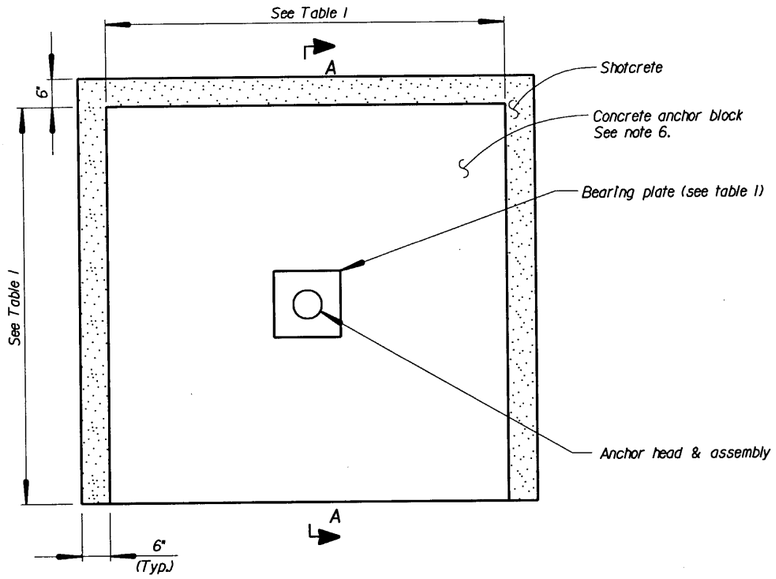

ANCHOR BLOCK PLAN VIEW

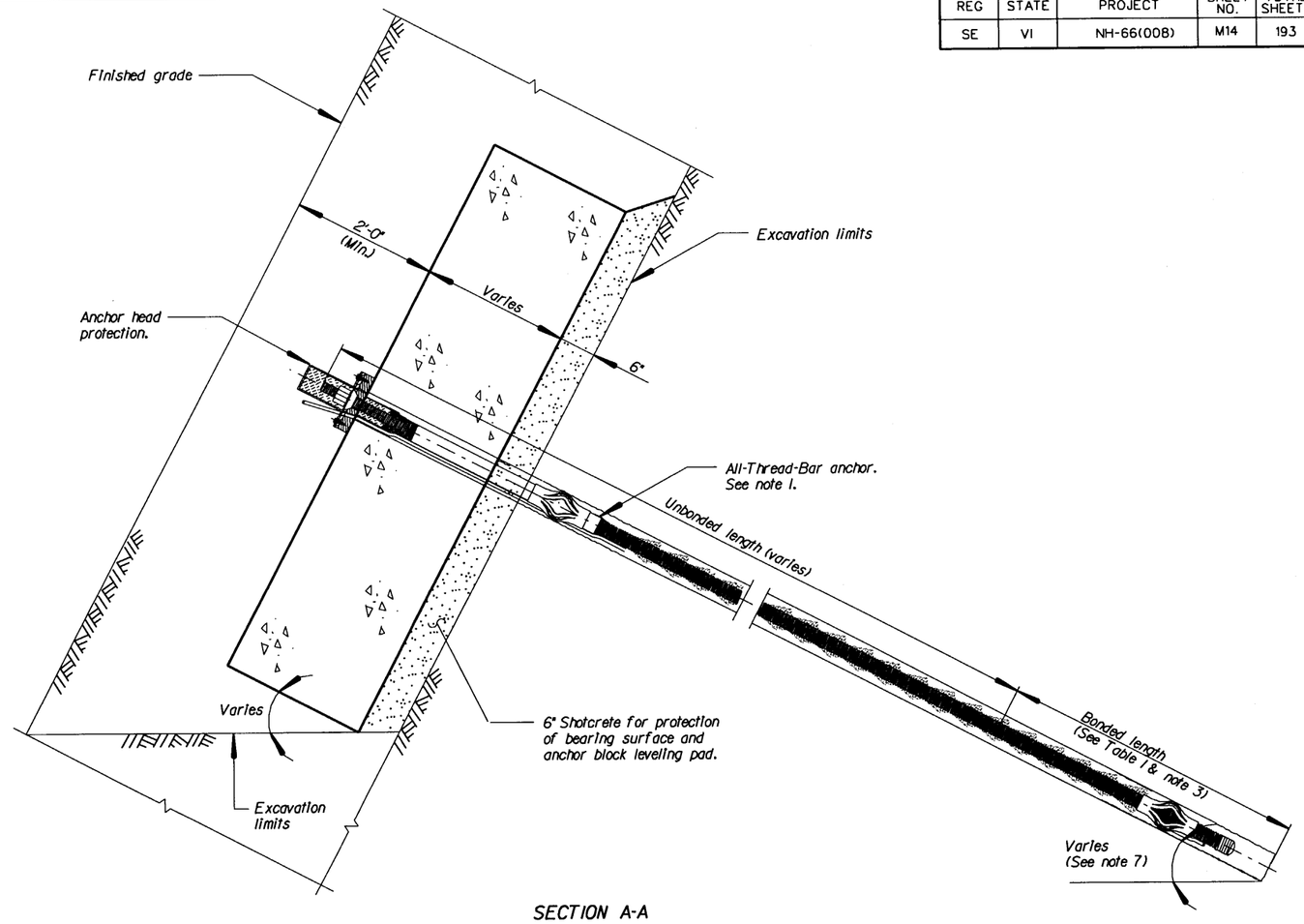

SECTION A-A

TABLE I

ANCHOR TYPE	DESIGN ANCHOR CAPACITY (KIPS)	Tendon Bar Diameter	MINIMUM DRILL HOLE DIAMETER	ANCHOR BLOCK DIM.(FT & IN)	BEARING PLATE DIM.(IN)
PRODUCTION	100K	1⅜"	6"	8'x8'x1'-9" SQ	2½"x8"x8"
PERFOMANCE LOAD TEST	100K	1⅜"	6"	8'x8'x1'-9" SQ	2½"x8"x8"

TABLE 2 - PERFORMANCE TEST LOAD SEQUENCE

TEST SEQUENCE	TEST LOAD INCREMENT								
	A	0.25D	0.50D	0.75D	1.00D	1.20D	1.33D	1.5D	REDUCE TO LOCK-OFF LOAD
1	●	●							
2	●	●	●						
3	●	●	●	●					
4	●	●	●	●	●				
5	●	●	●	●	●	●			
6	●	●	●	●	●	●	●		
7	●	●	●	●	●	●	●	●	●

NOTE: A TOTAL OF NINE ANCHORS WILL BE PERFORMANCE LOAD TESTED.
Rock Cut B = 5 Each; Rock Cut C = 4 Each

TABLE 3 - PROOF TEST LOAD SEQUENCE

TEST LOAD INCREMENT						
A	0.25D	0.50D	0.75D	1.00D	1.33D	REDUCE TO LOCK-OFF LOAD
	●	●	●	●	●	

A = ALIGNMENT LOAD AND D = DESIGN LOAD

NOTE: ALL PRODUCTION ANCHORS ARE TO BE PROOF LOAD TESTED.

Notes:

1. See "ANCHOR DETAILS" sheet (Detail 256-A) for All-Thread-Bar Anchor details.
2. At the direction of the CO, carefully remove any soft soils, rock pinnacles, ledges, or other unsuitable material from the anchor block face to a depth of 6" behind the face and shotcrete to provide a 6" thick leveling pad for the anchor block. Replace with shotcrete any material disturbed beyond a depth of 6" at no additional cost.
3. Minimum anchor bond lengths are estimates only. Anchor capacity must be developed in lower rockwood formation. Select drilling equipment and methods that provide anchor bond zones of adequate length and diameter to meet or exceed the required anchor capacities. All equipment and methods will be subject to approval by the CO.
4. Epoxy coated ASTM A615, grade 60 steel.
5. ASTM 572 Grade 50 Steel.
6. See "ANCHOR BLOCK REBAR DETAILS" sheet for anchor blocks' reinforcement.
7. Install All-Thread-Bar anchors perpendicular to cut slopes.

ESTIMATED QUANTITIES

SHOTCRETE PER ANCHOR BLOCK	
For	Shotcrete (Square yard)
8' x 8' x 1'-9"	7.79

U.S. DEPARTMENT OF TRANSPORTATION
FEDERAL HIGHWAY ADMINISTRATION
EASTERN FEDERAL LANDS HIGHWAY DIVISION

DETAIL

CHRISTIANSTED BY-PASS

ANCHOR BLOCK DETAILS

DETAIL APPROVED FOR USE --/----

REVISED:

DETAIL 552-D

10/20/2006 10:26:48 AM M:\Projects\vils\st_croix\nh66(008)proj_dev\Contract 2\details\ANCBLOCKDETS.DGN

REG	STATE	PROJECT	SHEET NO.	TOTAL SHEETS
SE	VI	NH-66(008)	M15	193

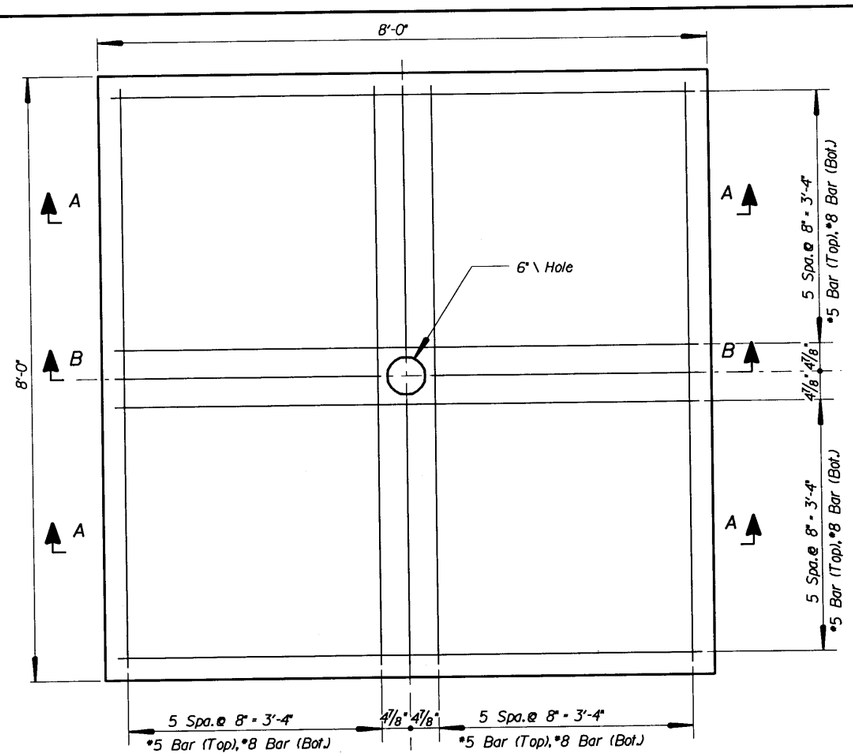

PLAN VIEW

(8' x 8' x 1'-9" Anchor Block shown

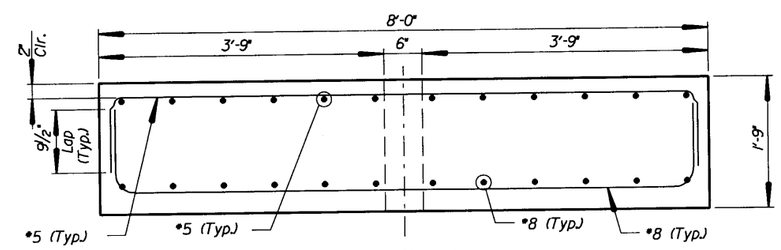

SECTION A-A

(8' x 8' x 1'-9" Anchor Block shown

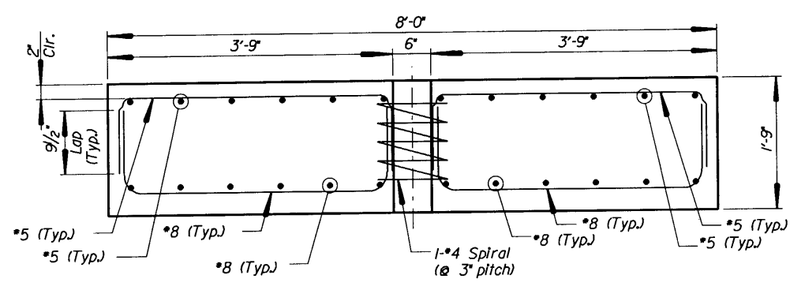

SECTION B-B

(8' x 8' x 1'-9" Anchor Block shown

GENERAL NOTES

SPECIFICATIONS:

CONSTRUCTION:

Standard Specifications for Construction of Roads and Bridges on Federal Highway Projects, FP-96.

DESIGN:

AASHTO LRFD Bridge Design Specifications, 2004 with Interim Specifications.

DESIGN STRESSES:

Class A(AE) Concrete: f'c = 4,000 psi at 28 days

Shotcrete: f'c = 4,000 psi at 28 days

Grout (K): f'c = 4,000 psi

Reinforcing Steel: fy = 60,000 psi

All-Thread-Bar Anchor: fy = 150,000 psi

CONCRETE:

All concrete shall be Class A(AE). Exposed corners shall be chamfered 3/4" unless otherwise noted.

GROUT:

All grout shall be Expansive Hydraulic Cement (K) and Type E-1, and conform to ASTM C-845. The water-cement ratio of the grout shall be between 0.40 and 0.44 by weight. The grout shall be free from slump. The grout for anchoring shall attain a compressive strength of 3,000 psi before testing.

REINFORCING STEEL:

All reinforcing steel shall be epoxy-coated. Reinforcing steel shall conform to ASTM A615, grade 60. Bends shown at the ends of bars shall be standard hooks as defined by AASHTO unless otherwise noted. Cover for reinforcing steel shall be 3 inches unless otherwise noted.

ESTIMATED QUANTITIES		
PER ANCHOR BLOCK		
Anchor Block	Reinforcing Steel (LBS.)	Concrete (Cu.Yds.)
8' x 8' x 1'-9"	963	4.2

U.S. DEPARTMENT OF TRANSPORTATION
FEDERAL HIGHWAY ADMINISTRATION
EASTERN FEDERAL LANDS HIGHWAY DIVISION

DETAIL

CHRISTIANSTED BY-PASS

ANCHOR BLOCK REBAR DETAILS

DETAIL APPROVED FOR USE --/----

REVISED:

DETAIL 552-E

10/17/2006 4:36:03 PM M:\Projects\vils\st_croix\nh66(008)proj_dev\Contract 2\details\ANCBLKREBAR.DGN

REG	STATE	PROJECT	SHEET NO.	TOTAL SHEETS
SE	VI	NH-66(008)	M16	193

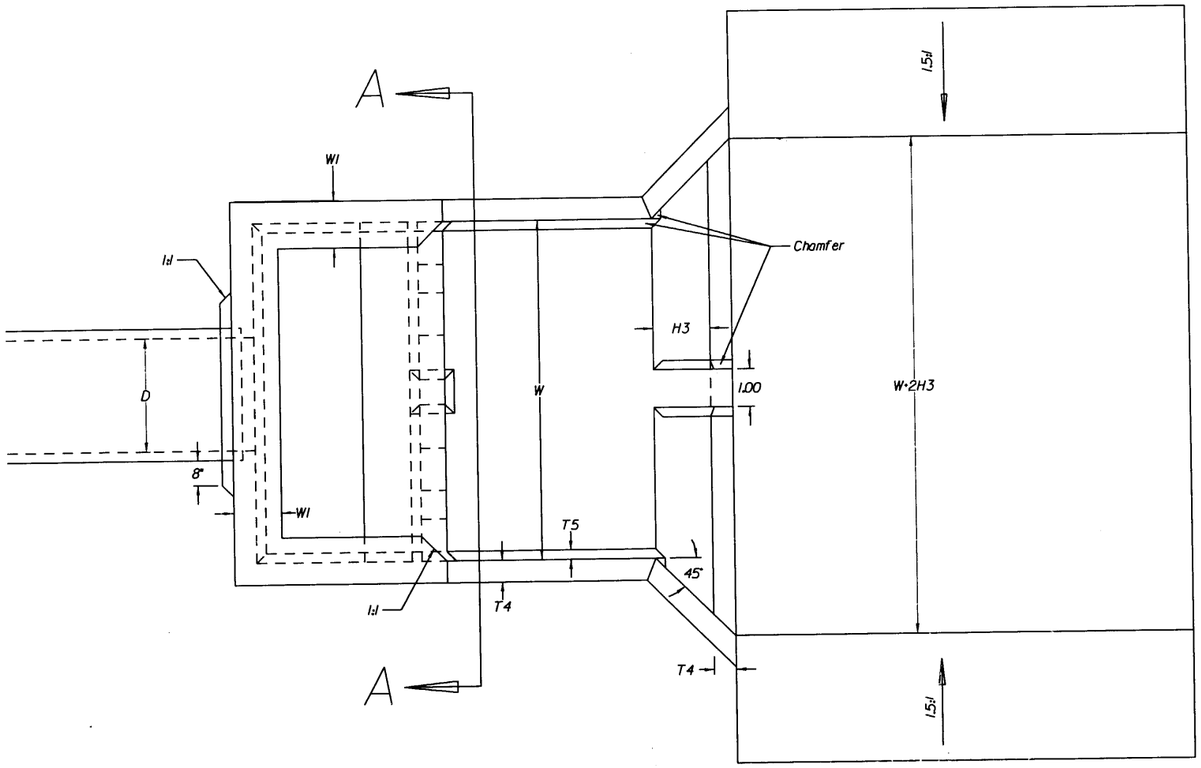

STILLING BASIN PLAN

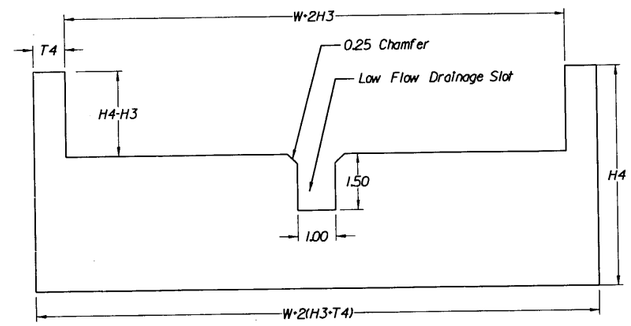

END SILL WALL ELEVATION

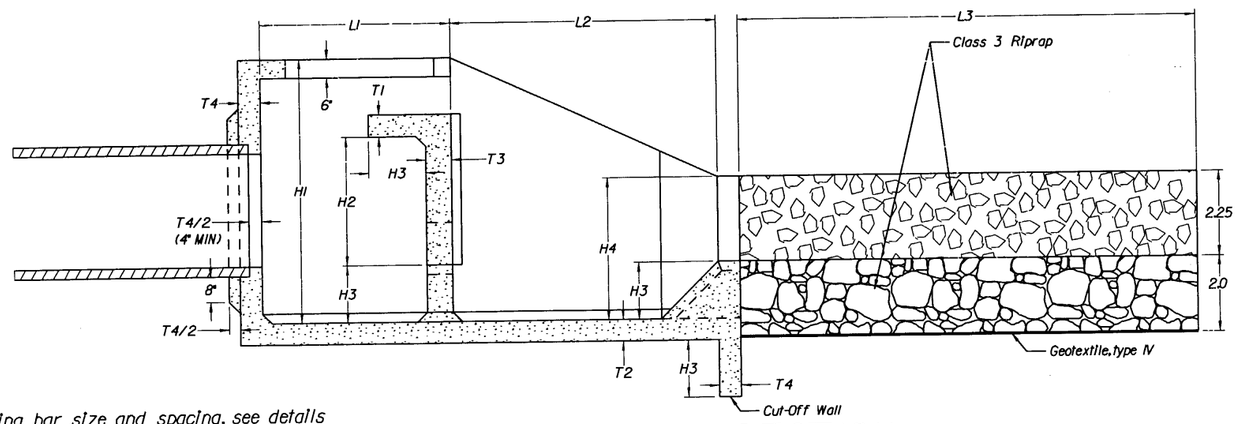

STILLING BASIN SECTION

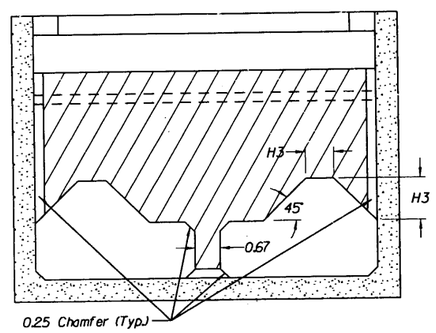

DETAIL OF BAFFLE WALL (SECTION A-A)

* For reinforcing bar size and spacing, see details for "Baffled Outlet". Otherwise, follow Stilling Basin dimensions on this sheet.

TYPE*	PIPE	STA.	SIZE	W	W1	W2	L=L1+L2	L1	L2	L3	H1	H2	H3	H4	T1	T2	T3	T4	T5
10	7	77+30	6'x5'	15'	1'-2"	3'-0"	20'-0"	8'-6"	11'-6"	24'-0"	11'-6"	5'-7"	2'-6"	6'-3"	8"	1'-0"	1'-0"	1'-0"	5"
6	8	86+17	42"	9'	0'-8"	2'-6"	12'-1"	5'-2"	6'-11"	14'-0"	6'-11"	3'-5"	1'-6"	3'-9"	7"	7"	8"	7"	3"

NO SCALE

Sheet 1 of 5

U.S. DEPARTMENT OF TRANSPORTATION
FEDERAL HIGHWAY ADMINISTRATION
EASTERN FEDERAL LANDS HIGHWAY DIVISION

DETAIL

STILLING BASIN FOR PIPE

DETAIL APPROVED FOR USE XX/XX
REVISED: 07/00

DETAIL 601-A

10/18/2006 7:12:43 AM M:\Projects\vlis\st_crox\nh66(008)\proj_dev\Contract 2\details\Details\V2.dgn

REG	STATE	PROJECT	SHEET NO.	TOTAL SHEETS
SE	VI	NH-66(008)	M17	193

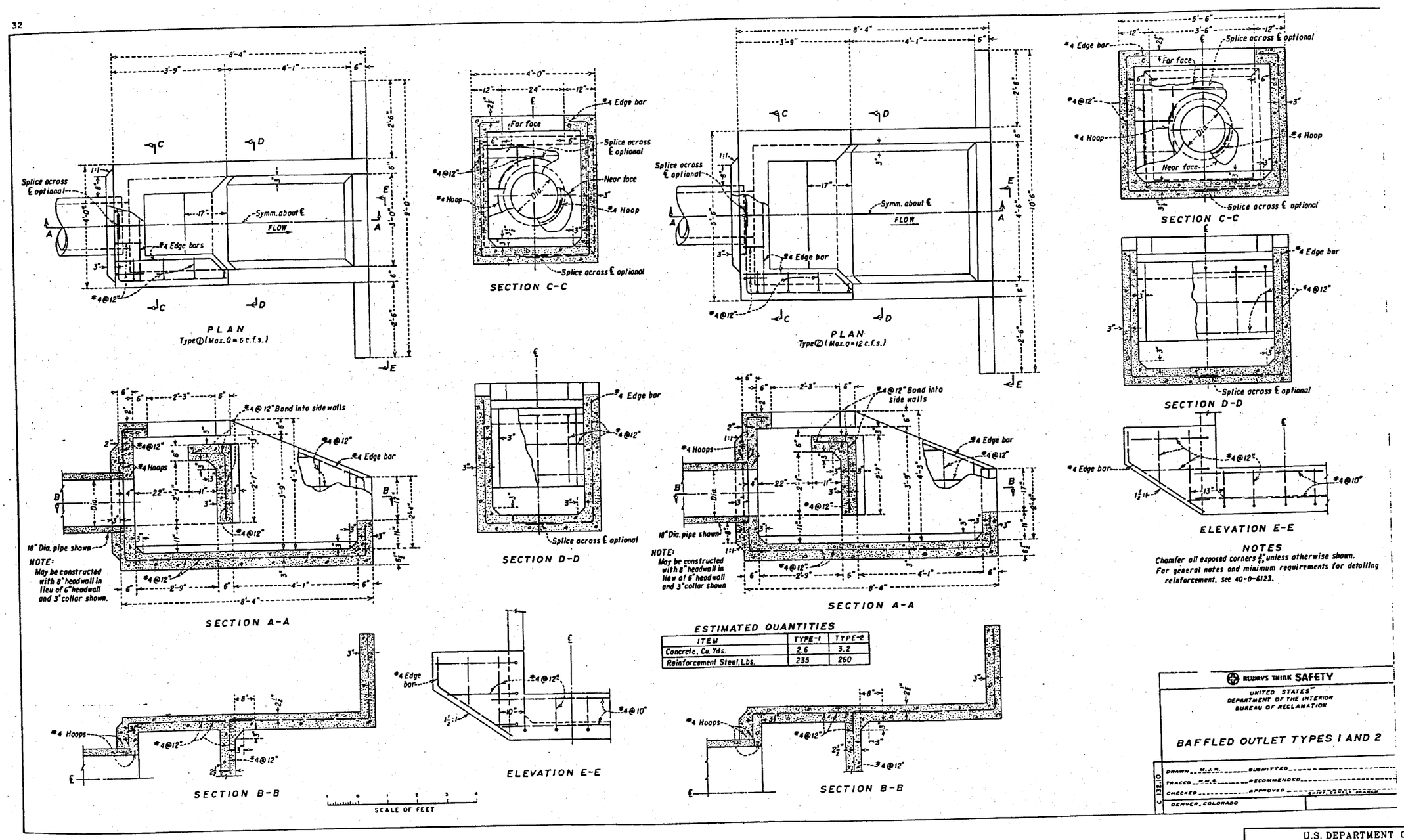

NOTE:
May be constructed with 8" headwall in lieu of 6" headwall and 3" collar shown.

NOTES
Chamfer all exposed corners 3/4" unless otherwise shown.
For general notes and minimum requirements for detailing reinforcement, see 40-D-6123.

ESTIMATED QUANTITIES

ITEM	TYPE-1	TYPE-2
Concrete, Cu. Yds.	2.6	3.2
Reinforcement Steel, Lbs.	235	260

ALWAYS THINK SAFETY

UNITED STATES
DEPARTMENT OF THE INTERIOR
BUREAU OF RECLAMATION

BAFFLED OUTLET TYPES 1 AND 2

DRAWN M.J.R. SUBMITTED
TRACED H.M.S. RECOMMENDED
CHECKED APPROVED
DENVER, COLORADO

Sheet 2 of 5

U.S. DEPARTMENT OF TRANSPORTATION
FEDERAL HIGHWAY ADMINISTRATION
EASTERN FEDERAL LANDS HIGHWAY DIVISION

DETAIL

STILLING BASIN
BAFFLED OUTLET
TYPES 1 AND 2

DETAIL APPROVED FOR USE --/----

REVISED: 10/00

DETAIL
601-A

REG	STATE	PROJECT	SHEET NO.	TOTAL SHEETS
SE	VI	NH-66(008)	M18	193

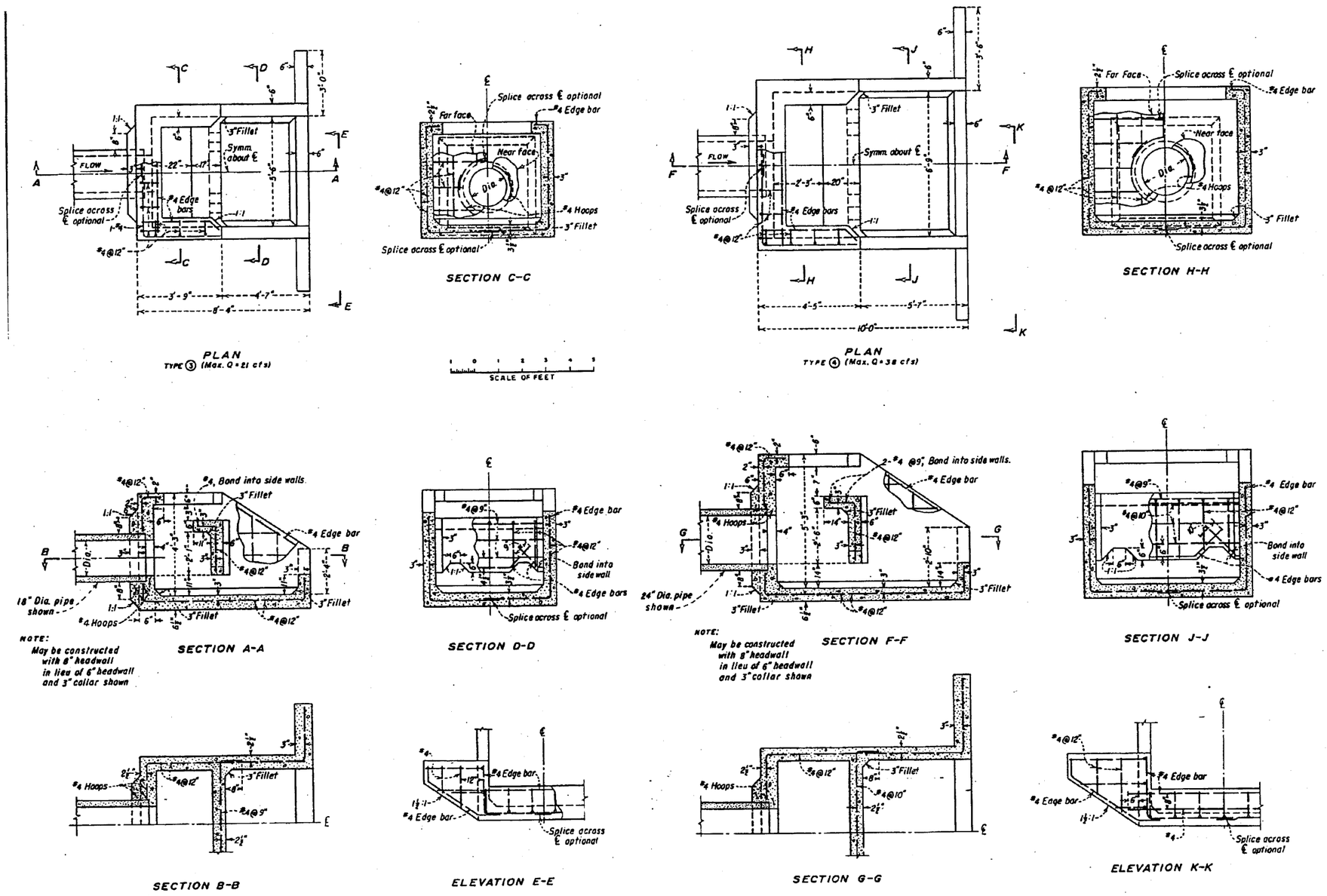

ESTIMATED QUANTITIES

ITEM	TYPE-3	TYPE-4
Concrete, Cu.Yds.	3.5	5.3
Reinforcement Steel, lbs.	270	425

NOTES

Chamfer all exposed corners ¾", unless otherwise shown.
For general notes and minimum requirements for detailing reinforcement, see 40-0-6123.

ALWAYS THINK SAFETY

UNITED STATES
DEPARTMENT OF THE INTERIOR
BUREAU OF RECLAMATION

BAFFLED OUTLET TYPES 3 AND 4

DRAWN L.R.B. - E.W.M. SUBMITTED
TRACED W.C.W. RECOMMENDED
CHECKED APPROVED
DENVER, COLORADO

C 132.20

Sheet 3 of 5

U.S. DEPARTMENT OF TRANSPORTATION
FEDERAL HIGHWAY ADMINISTRATION
EASTERN FEDERAL LANDS HIGHWAY DIVISION

DETAIL

STILLING BASIN BAFFLED OUTLET TYPES 3 AND 4

DETAIL APPROVED FOR USE --/----

REVISED: 10/00

DETAIL 601-A

REG	STATE	PROJECT	SHEET NO.	TOTAL SHEETS
SE	VI	NH-66(008)	M19	193

34

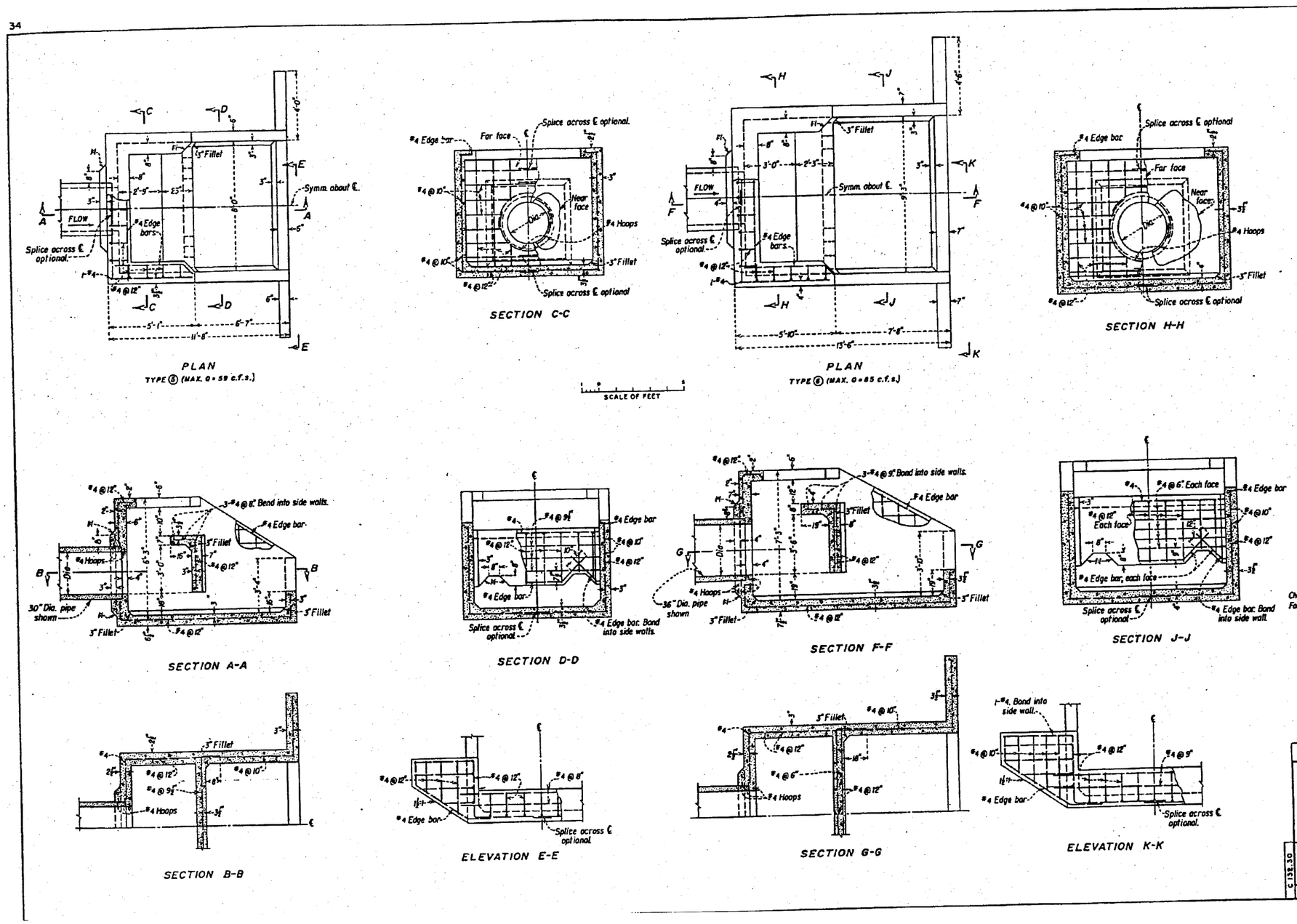

ESTIMATED QUANTITIES

ITEM	TYPE-5	TYPE-6
Concrete, Cu. Yds.	7.3	10.9
Reinforcement Steel, Lbs.	565	830

NOTES

Chamfer all exposed corners ¾", unless otherwise shown.
For general notes and minimum requirements for detailing reinforcement, see 40-D-6123.

ALWAYS THINK SAFETY

UNITED STATES
DEPARTMENT OF THE INTERIOR
BUREAU OF RECLAMATION

BAFFLED OUTLET TYPES 5 AND 6

DRAWN E.E.H.-E.W.M. SUBMITTED
TRACED G.D.G. RECOMMENDED
CHECKED APPROVED
CHIEF, SANALS BRANCH
DENVER, COLORADO.

C 132.30

Sheet 4 of 5

U.S. DEPARTMENT OF TRANSPORTATION
FEDERAL HIGHWAY ADMINISTRATION
EASTERN FEDERAL LANDS HIGHWAY DIVISION

DETAIL

STILLING BASIN BAFFLED OUTLET TYPES 5 AND 6

DETAIL APPROVED FOR USE --/----

REVISED: 10/00

DETAIL 601-A

REG	STATE	PROJECT	SHEET NO.	TOTAL SHEETS
SE	VI	NH-66(008)	M20	193

36

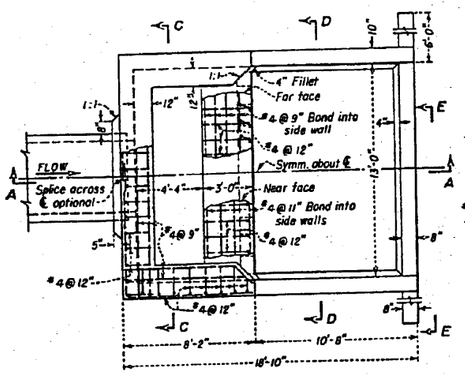

PLAN
TYPE 9 (MAX. Q = 191 c.f.s.)

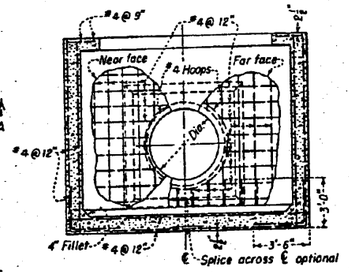

SECTION C-C

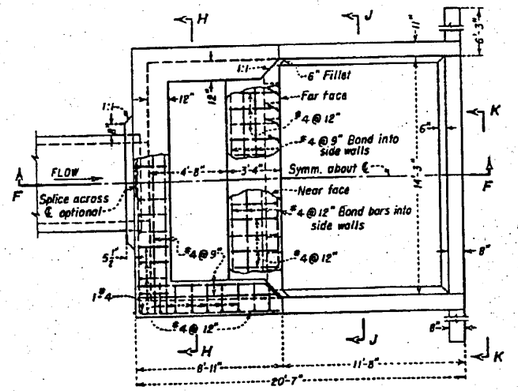

PLAN
TYPE 10 (MAX. Q = 236 c.f.s.)

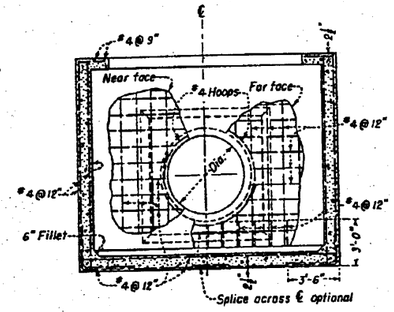

SECTION H-H

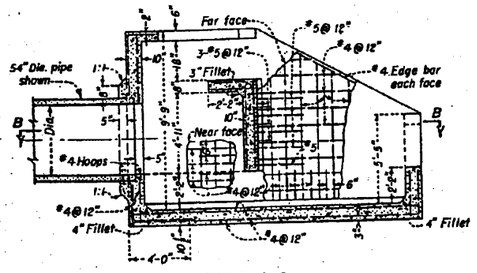

SECTION A-A

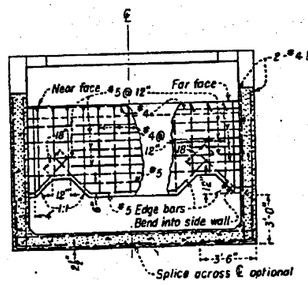

SECTION D-D

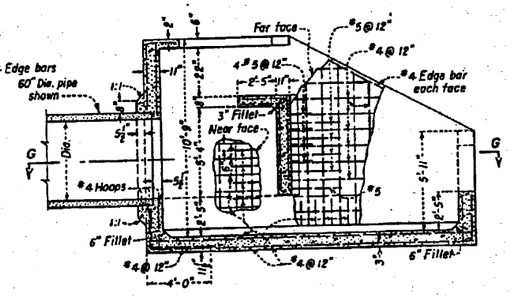

SECTION F-F

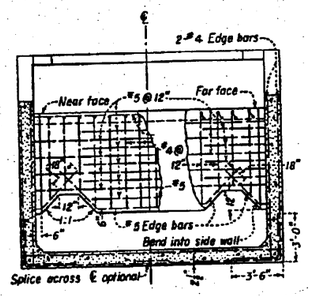

SECTION J-J

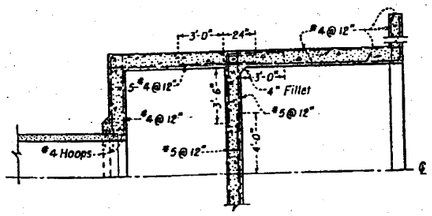

SECTION B-B

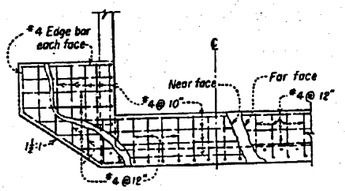

ELEVATION E-E

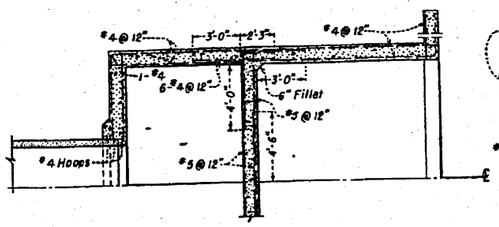

SECTION G-G

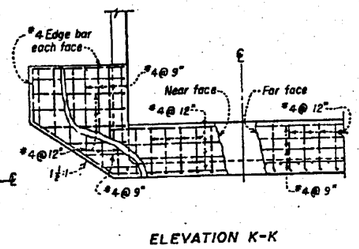

ELEVATION K-K

SCALE OF FEET

ESTIMATED QUANTITIES

ITEM	TYPE-9	TYPE-10
Concrete, Cu.Yds.	28	37
Reinforcement Steel, lbs.	2640	3310

NOTES

Chamfer all exposed corners $\frac{3}{4}$", unless otherwise shown.
For general notes and minimum requirements for detailing reinforcement, see 40-D-6123.

ALWAYS THINK SAFETY

UNITED STATES
DEPARTMENT OF THE INTERIOR
BUREAU OF RECLAMATION

BAFFLED OUTLET TYPES 9 AND 10

DRAWN E.E.-F.W.H. SUBMITTED
TRACED H.S.C. RECOMMENDED
CHECKED APPROVED
CHIEF, CANALS BRANCH
DENVER COLORADO

C 132.10

Sheet 5 of 5

U.S. DEPARTMENT OF TRANSPORTATION
FEDERAL HIGHWAY ADMINISTRATION
EASTERN FEDERAL LANDS HIGHWAY DIVISION

DETAIL
STILLING BASIN
BAFFLED OUTLET
TYPES 9 AND 10

DETAIL APPROVED FOR USE --/----
REVISED: 10/00

DETAIL
601-A

M:\Projects\vi\st_crol\nh66\008\m20\m20\2details\Details\2.dgn

REG	STATE	PROJECT	SHEET NO.	TOTAL SHEETS
SE	VI	NH-66(008)	M21	193

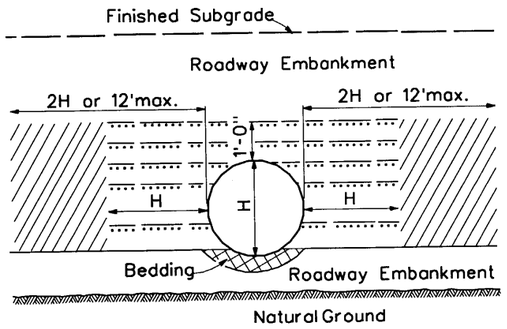

ABOVE NATURAL GROUND

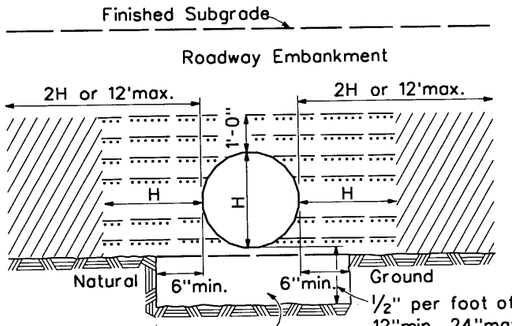

Remove unyielding material and replace with selected fine compressible material. Lightly compact in layers not over 6 inches in uncompacted depth.

ON UNYIELDING MATERIAL

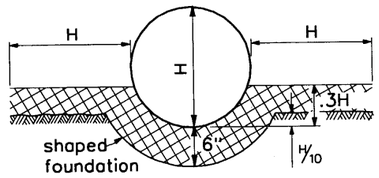

CLASS B BEDDING

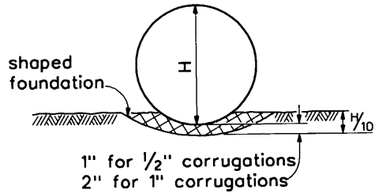

CLASS C BEDDING

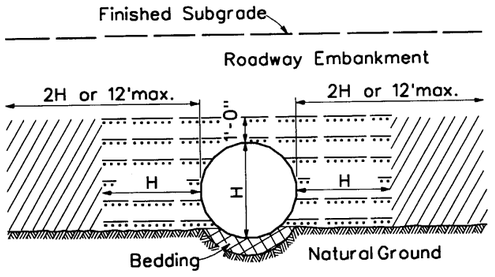

ON NATURAL GROUND

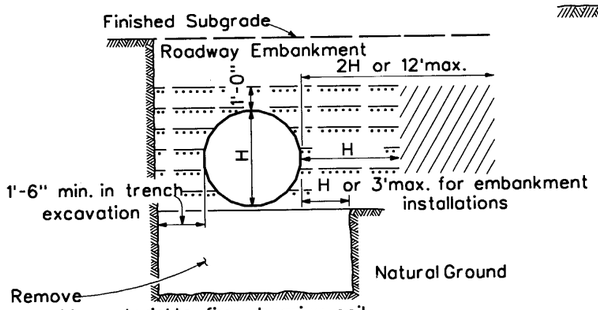

Remove unstable material to firm bearing soil and replace with approved granular foundation fill material properly compacted.

ON UNSTABLE MATERIAL

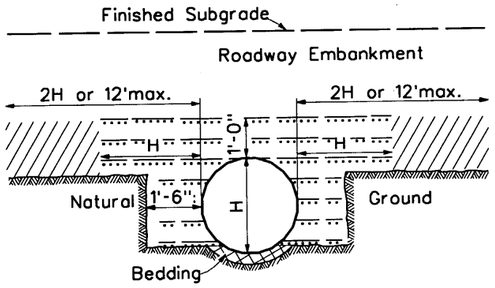

ABOVE AND BELOW NATURAL GROUND

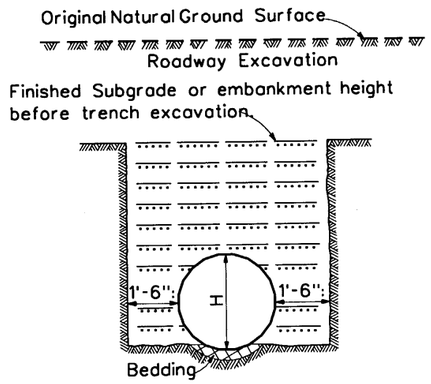

BELOW NATURAL GROUND OR TRENCH EXCAVATION IN EMBANKMENT

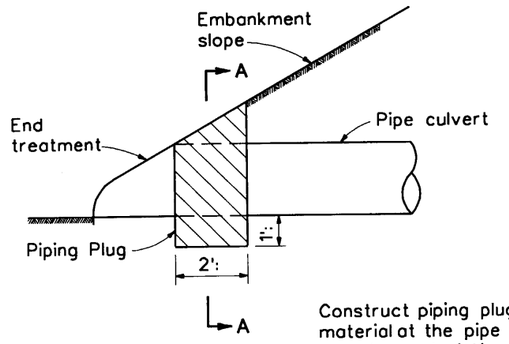

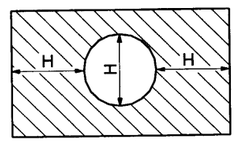

SECTION A-A

Construct piping plug of impermeable backfill material at the pipe culvert inlet where granular material is used for backfill.

PIPING PLUG

NOTES:

1. When directed, camber pipe culverts upward from a chord through the inlet and outlet inverts an ordinate amount equal to 1% of the pipe length. Develop camber on a parabolic curve. If the midpoint elevation on the parabolic curve as designed exceeds the elevation of the inlet invert, reduce the amount of camber or increase the pipe culvert gradient.

2. H equals the diameter of all round pipe culverts or the rise dimension of all pipe arch culverts.

3. Bed pipe culverts 48 inches and larger in diameter and pipe arch culverts 38 inches and greater in rise in Class B Bedding. Bed smaller pipe culverts in Class B or C Bedding.

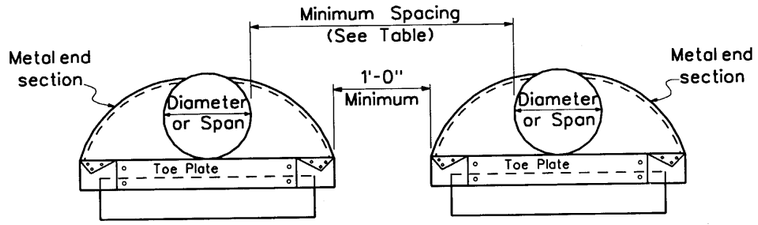

MINIMUM SPACING	
DIAMETER or SPAN INCHES	SPACING INCHES
UP to 48	24
48 and UP	1/2 Diameter or Span or 36 whichever is less

MULTIPLE PIPE INSTALLATION

Bedding Material

Embankment material placed in layers not exceeding 6" compacted depth.

Approved granular material or fine compactable soil placed in layers not exceeding 6" compacted depth.

NO SCALE

U.S. DEPARTMENT OF TRANSPORTATION
FEDERAL HIGHWAY ADMINISTRATION
EASTERN FEDERAL LANDS HIGHWAY DIVISION

STANDARD

METAL AND PLASTIC PIPE CULVERT BEDDING

STANDARD APPROVED FOR USE XX/XX

REVISED: XX/XX

STANDARD 602-3

10/18/2006 7:15:54 AMM:\Projects\viis\st_croix\nh66(008)\proj_dev\Contract 2\details\DetailsV2.dgn

REG	STATE	PROJECT	SHEET NO.	TOTAL SHEETS
SE	VI	NH-66(008)	M22	193

POLYETHYLENE (PE) PLASTIC ROUND PIPE CULVERT

FILL HEIGHT TABLE AND MINIMUM CELL CLASSIFICATION NUMBER PER ASTM D 3350

SMOOTH WALL, CORRUGATED AND RIBBED PIPE CULVERT

PIPE SIZE	MINIMUM COVER	SMOOTH WALL (SOLID WALL)						
		CELL CLASSIFICATION NUMBER 335434C						
		MINIMUM WALL THICKNESS IN INCHES						
DIAMETER INCHES	INCHES	0.607	0.857	0.923	1.154	1.385	1.292	1.477
		MAXIMUM FILL HEIGHT IN FEET						
12	12	57						
18	12		52					
24	12			38				
30	12				38			
36	12					38		
42	12						27	
48	12							27

PIPE SIZE	MINIMUM COVER	CORRUGATED	
		CELL CLASS. NO. 315412C	CELL CLASS. NO. 324420C
DIAMETER INCHES	INCHES	MAX. FILL HEIGHT IN FT.	MAX. FILL HEIGHT IN FT.
12	12	11	10
15	12	11	10
18	12	12	10
24	12	12	10
30	12	12	10
36	12	11	10

PIPE SIZE	MINIMUM COVER	RIBBED	
		CELL CLASS. NO. 334433C	CELL CLASS. NO. 335434C
DIAMETER INCHES	INCHES	MAX. FILL HEIGHT IN FEET	
18	12	18	24
24	12	22	28
30	12	22	28
36	12	25	31
42	12	21	27
48	12	21	26

POLYVINYL CHLORIDE (PVC) PLASTIC ROUND PIPE CULVERT

FILL HEIGHT TABLE AND MINIMUM CELL CLASSIFICATION NUMBER PER ASTM D 1784

SMOOTH WALL AND RIBBED PIPE CULVERT

PIPE SIZE	MINIMUM COVER	SMOOTH WALL (SOLID WALL)			
		CELL CLASS. NO. 12454C		CELL CLASS. NO. 12364C	
		MIN. WALL THICKNESS IN INCHES			
DIAMETER INCHES	INCHES	0.358	0.438	0.358	0.438
		MAX. FILL HEIGHT IN FEET			
12	12	65		69	
15	12		62		66

PIPE SIZE	MINIMUM COVER	RIBBED	
		CELL CLASS. NO. 12454C	CELL CLASS. NO. 12364C
DIAMETER INCHES	INCHES	MAX. FILL HEIGHT IN FEET	
12	12	37	26
15	12	32	22
18	12	33	23
24	12	29	21
30	12	28	20
36	12	27	19
42	12	26	18
48	12	24	17

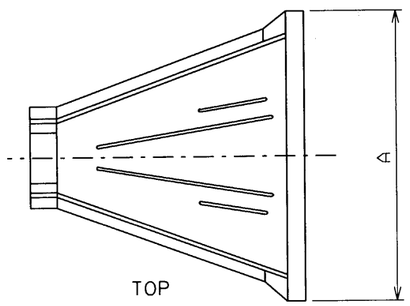

TOP

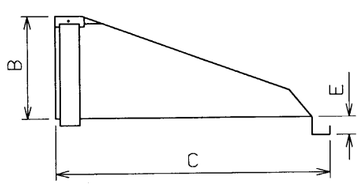

SIDE

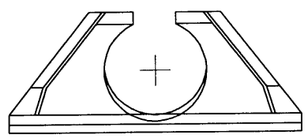

FRONT

PLASTIC PIPE END SECTION				
PIPE SIZE	DIMENSIONS			
DIAMETER	A	B	C	E
12	42	15	33	6
15	46	25	45	6
18	54	29	55	6
24	64	37	65	6
30	88	36	64	6
36	88	43	67	6

NOTES:

1. When directed, camber pipe culverts upward from a chord through the inlet and outlet inverts an ordinate amount equal to 1% of the pipe length. Develop camber on a parabolic curve. If the midpoint elevation on the parabolic curve as designed exceeds the elevation of the inlet invert, reduce the amount of camber or increase the pipe culvert gradient.

2. Measure minimum cover from the top of the pipe culvert to the subgrade for flexible pavements, and to the top of the pavement for rigid pavements. Measure maximum fill height from the top of the pipe to the top of the pavement for both flexible and rigid pavement.

U.S. DEPARTMENT OF TRANSPORTATION
FEDERAL HIGHWAY ADMINISTRATION
EASTERN FEDERAL LANDS HIGHWAY DIVISION

STANDARD

PLASTIC PIPE CULVERT

STANDARD APPROVED FOR USE XX/XX

REVISED: XX/XX

STANDARD 602-5

10/18/2006 7:17:25 AMM:\Projects\vfis\st_croix\nh66(008)\proj_dev\Contract 2\details\DetailsV2.dgn

REG	STATE	PROJECT	SHEET NO.	TOTAL SHEETS
SE	VI	NH-66(008)	M23	193

NOTE:

1. D equals the diameter of all round pipe or the rise dimension of all pipe arch culverts.

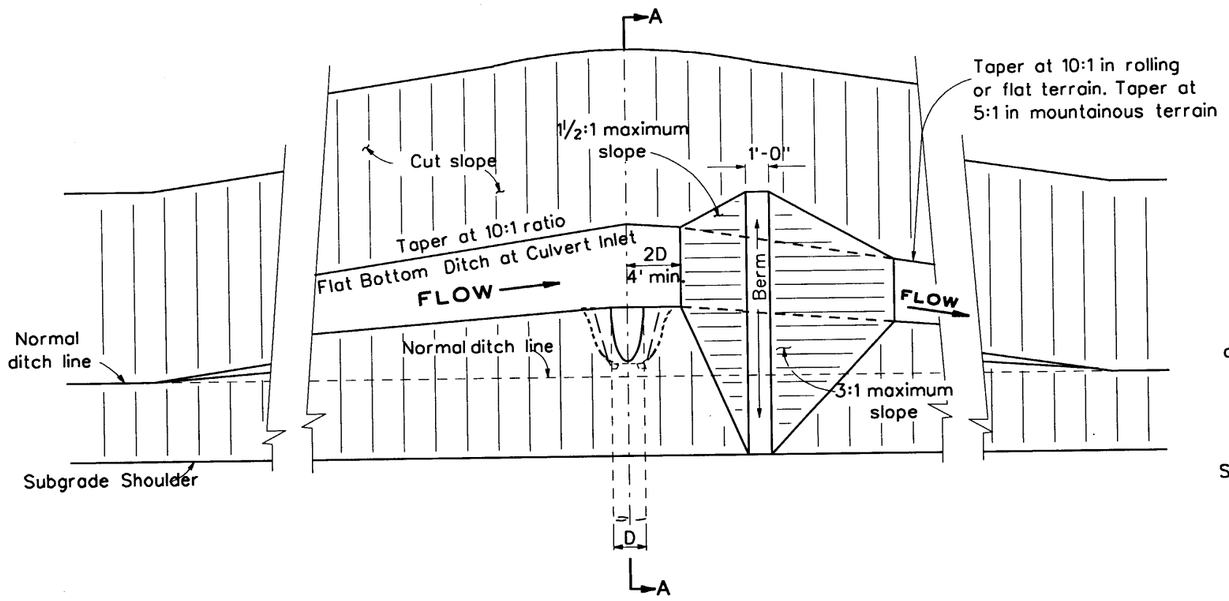

PLAN

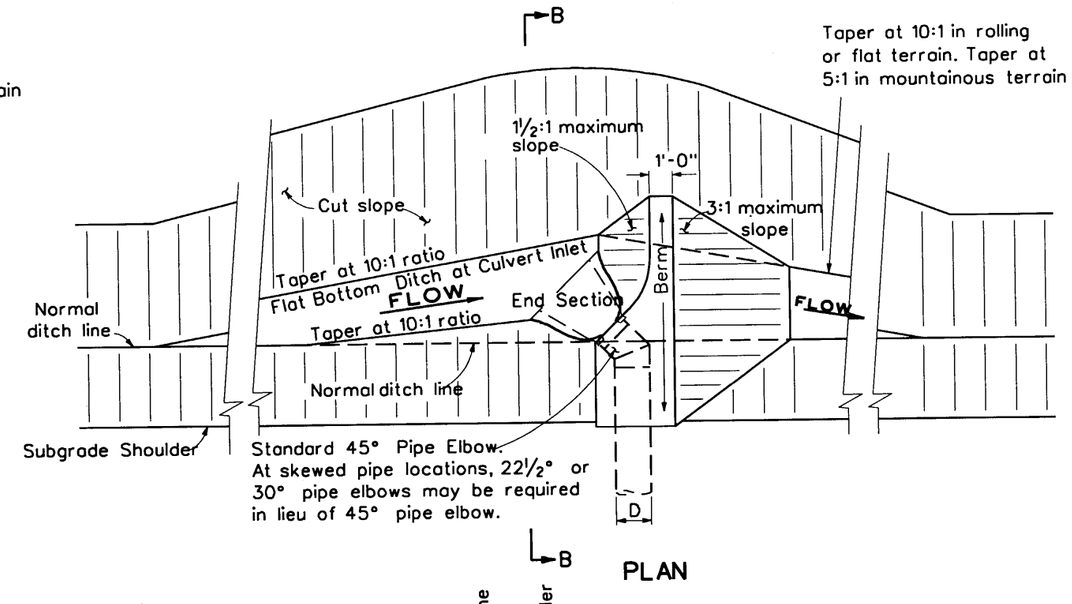

PLAN

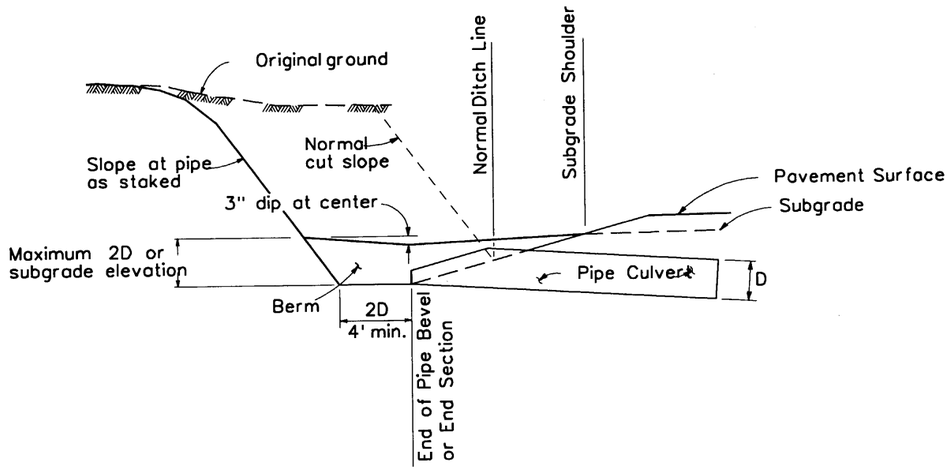

TYPE *
SECTION A-A

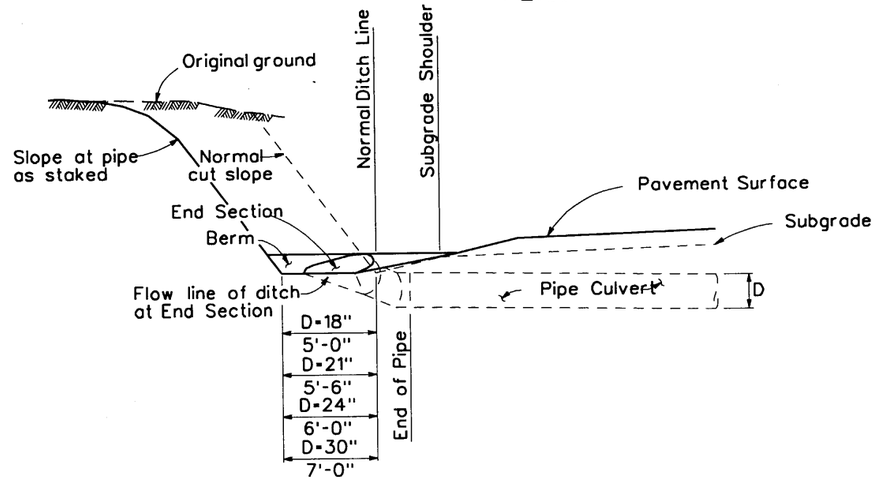

TYPE **
SECTION B-B

NO SCALE

U.S. DEPARTMENT OF TRANSPORTATION
FEDERAL HIGHWAY ADMINISTRATION
EASTERN FEDERAL LANDS HIGHWAY DIVISION

STANDARD

PIPE CULVERT INLET TREATMENT IN CUT SLOPES

STANDARD APPROVED FOR USE XX/XX

REVISED: XX/XX

STANDARD 602-6

10/18/2006 7:18:39 AMM:\Projects\vis\st_croix\nh66(008)\proj_dev\Contract 2\details\DetailsV2.dgn

REG	STATE	PROJECT	SHEET NO.	TOTAL SHEETS
SE	VI	NH-66(008)	M24	193

CONCRETE ROUND PIPE CULVERT

FILL HEIGHT AND PIPE CLASS TABLE

PIPE SIZE DIAMETER INCHES	MINIMUM COVER INCHES	EMBANKMENT CLASS II	EMBANKMENT CLASS III	EMBANKMENT CLASS IV	EMBANKMENT CLASS V	TRENCH CLASS II	TRENCH CLASS III	TRENCH CLASS IV	TRENCH CLASS V
		MAXIMUM FILL HEIGHT ABOVE TOP OF PIPE IN FEET							
12	24	11	11	16	23	18	18	26	37
18	24	10	10	25	39	14	14	31	45
24	24	11	11	15	31	15	15	22	40
30	24	9	13	16	35	13	17	20	46
36	24	9	9	20	41	11	14	26	56
48	24	12	14	26	44	16	17	31	50
60	24	15	17	28	44	15	20	32	50
72	24	13	17	31	41	16	20	35	49
84	24	13	19	31		15	23	37	
96	24	13	20			16	24		
108	24	16	20			19	26		

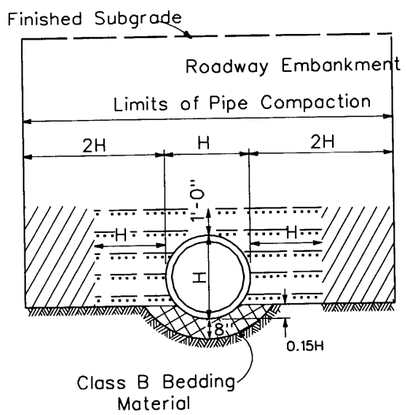

EMBANKMENT INSTALLATION

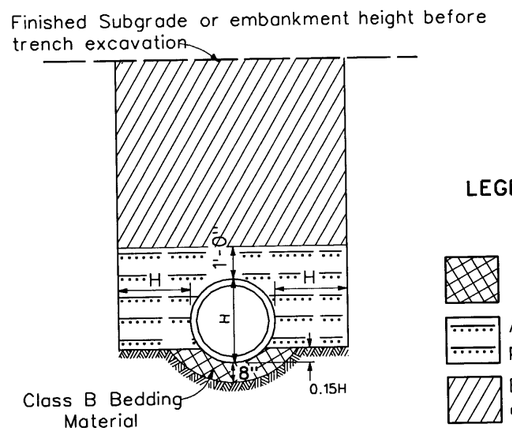

TRENCH INSTALLATION

LEGEND:

- Bedding Material
- Approved granular material or fine compactable soil placed in layers not exceeding 6" compacted depth.
- Embankment material placed in layers not exceeding 6" compacted depth.
- Impermeable backfill material

NOTE:

1. When directed, camber pipe culverts upward from a chord through the inlet and outlet inverts an ordinate amount equal to 1% of the pipe length. Develop camber on a parabolic curve. If the midpoint elevation on the parabolic curve as designed exceeds the elevation of the inlet invert, reduce the amount of camber or increase the pipe culvert gradient.
2. Measure minimum cover from the top of the pipe culvert to the subgrade for flexible pavements, and to the top of the pavement for rigid pavements. Measure maximum fill height from the top of the pipe to the top of the pavement for both flexible and rigid pavements.
3. Pipe compaction limits shown are for pipe installation in an embankment. For pipe installation in a trench, the compaction limits shall be the walls of the trench.
4. Where unyielding or unstable material is encountered, install the pipe culvert according to the limits of pipe compaction shown on standard 602-3.
5. When grades exceed 10%, install supplemental concrete pipe ties on pipe culvert or install bell and spigot pipe.
6. Maximum fill heights for pipe culvert installations may be increased on approval of site-specific structural pipe designs meeting the criteria of AASHTO Standard Specifications for Highway Bridges.

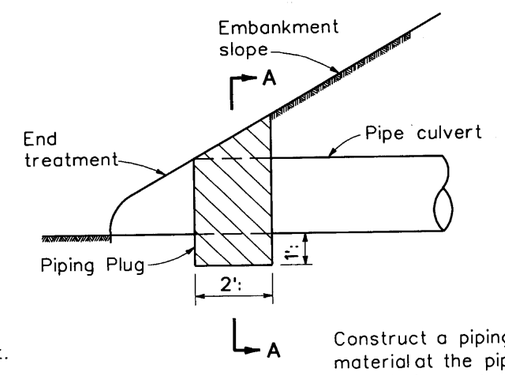

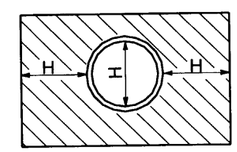

SECTION A-A

Construct a piping plug of impermeable backfill material at the pipe inlet where granular material is used for backfill.

PIPING PLUG

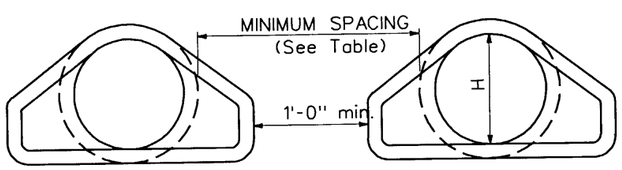

MINIMUM SPACING		
DIAMETER INCHES	EMBANKMENT	TRENCH
12-36	15"	2H
36-96	H/2	72"
OVER 96	48"	72"

MULTIPLE ROUND PIPE INSTALLATION

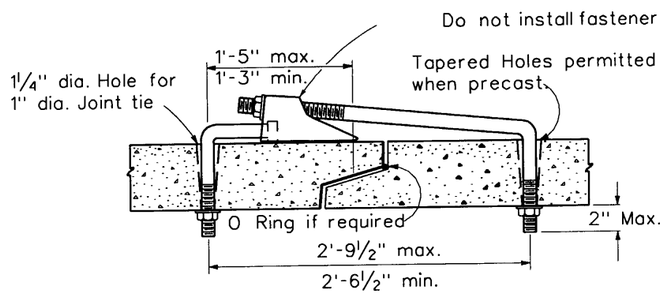

SUPPLEMENTAL CONCRETE PIPE TIE

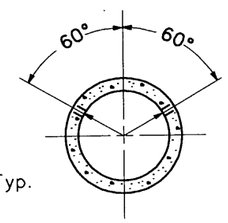

PLACEMENT OF HOLES

NO SCALE

U.S. DEPARTMENT OF TRANSPORTATION
FEDERAL HIGHWAY ADMINISTRATION
EASTERN FEDERAL LANDS HIGHWAY DIVISION

STANDARD

CONCRETE PIPE CULVERT INSTALLATION

STANDARD APPROVED FOR USE XX/XX

REVISED: XX/XX

STANDARD 602-7

10/18/2006 7:19:43 AMM:\Projects\viis\st_croix\nh66(008)\proj_dev\Contract 2\details\DetailsV2.dgn

REG	STATE	PROJECT	SHEET NO.	TOTAL SHEETS
SE	VI	NH-66(008)	M25	193

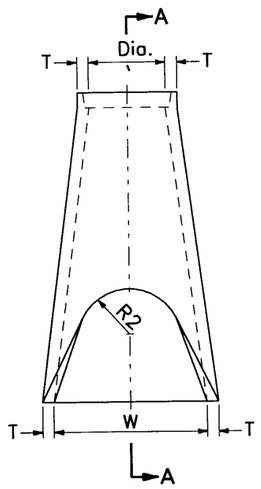

PLAN

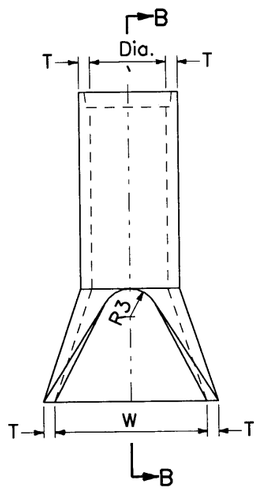

PLAN

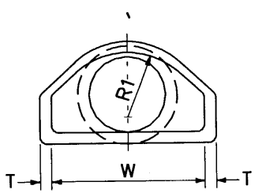

ELEVATION

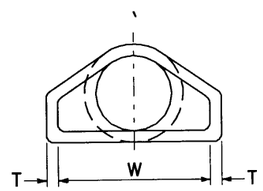

ELEVATION

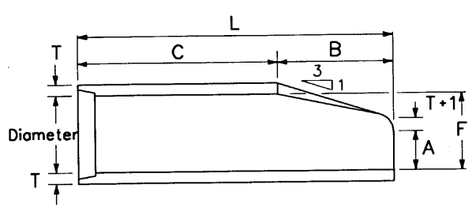

SECTION A-A

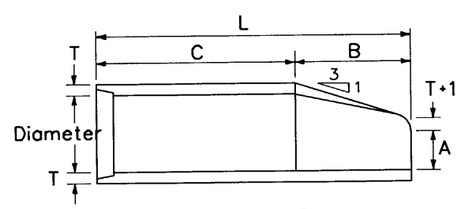

SECTION B-B

NOTES:

1. Variations in design and dimensions are permitted to allow for manufacturer's standards.
2. Fabricate the outlet end section with a groove end and the inlet end section with a tongue end.
3. Warp embankment slopes to match the slope of the flared end section.

END SECTIONS FOR ROUND PIPE CULVERT

PIPE SIZE	DIMENSIONS									
DIAMETER INCHES	T INCHES	A INCHES	B INCHES	C INCHES	L INCHES	W INCHES	F INCHES	R1 INCHES	R2 INCHES	R3 INCHES
12	2	4	24	48 7/8	72 7/8	24	13	10 1/8	9	4
15	2 1/4	6	27	46	73	30	16	12 1/2	11	6
18	2 1/2	9	27	46	73	36	19	15 1/2	12	7 1/2
21	2 3/4	9	36	37	73	42	22	16 1/2	13	5
24	3	9 1/2	43 1/2	30	73 1/2	48	25	16 13/16	14	8
27	3 1/4	10 1/2	48	25 1/2	73 1/2	54	28	--	14 1/2	9
30	3 1/2	12	54	19 3/4	73 3/4	60	31	18 1/2	15	8
33	3 3/4	13 1/2	58 1/2	37 1/2	96	66	34	23 3/4	17 1/2	9
36	4	15	63	33	96	72	37	23 3/16	20	11
42	4 1/2	21	63	33	96	78	43	--	22	11
48	5	24	72	24	96	84	49	--	22	12

NO SCALE

U.S. DEPARTMENT OF TRANSPORTATION
FEDERAL HIGHWAY ADMINISTRATION
EASTERN FEDERAL LANDS HIGHWAY DIVISION

STANDARD

CONCRETE END SECTION FOR ROUND PIPE

STANDARD APPROVED FOR USE XX/XX

REVISED: XX/XX

STANDARD 602-8

10/18/2006 7:20:49 AM M:\Projects\viis\st_croix\nh66(008)\proj_dev\Contract 2\details\DetailsV2.dgn

REG	STATE	PROJECT	SHEET NO.	TOTAL SHEETS
SE	VI	NH-66(008)	M26	193

BCS-DT

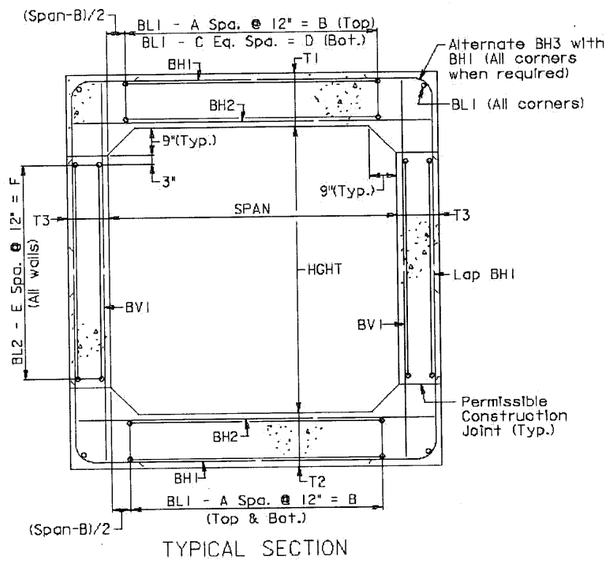

TYPICAL SECTION

GENERAL NOTE

Capacity: HS20-44 Loading and Alternate Military Loading.

Specifications:

Construction - Va. Department of Transportation Road and Bridge Specifications, 1991.
Design - AASHTO Standard Specifications for Highway Bridges, 1983, including Interim Specifications, 1984, 1985 and VDOT Modifications, using Load Factor Design.

All concrete shall be Class A4.

Deformed reinforcing bars shall conform to ASTM A615, Grade 60. All reinforcing bar dimensions on the detailed drawings are to centers of bars except where otherwise noted and are subject to fabrication and construction tolerances.

Construction joints shall be constructed and bonded in accordance with the current Road and Bridge Specifications.

Barrels more than 35' in length shall be poured in sections by providing vertical construction joints, not exceeding 25' between joints nor more than 30' from ends of barrels.

** Bars BH1 & BH3 shall have a pin diameter of 24 bar diameters.

Dimensions on bar diagrams are out-to-out of bars. Bars are straight and #4 in size unless otherwise shown. BL2 shall be #3 in size.

The number of BL1 & BL2 bars shown in the table is the number of longitudinal bars shown in the Typical Section and may not equal the total number of bars required. BL1 & BL2 shall have a lap of 30 bar diameters at splices. At construction joints, first placed bars shall project 30 bar diameters beyond the joint. Estimated QUAN./LF shown for reinforcing steel does not include quantity for laps of BL1 & BL2 bars. The additional weight per longitudinal lap is shown in the table.

The centers of main reinforcing bars shall be 2" from the face of the concrete.

When concrete protective coating is required, all steel shall be epoxy-coated. All reinforcing steel for culverts under 0 to 2 foot fills shall be epoxy-coated.

At the Contractor's option, BV1 bars may be spliced at the permissible construction joint in order to facilitate construction. No additional compensation shall be provided for the increase in reinforcing steel quantity due to the splices.

Headwall quantities shown assume wingwalls are to be built at a 45° angle to the headwall.

The designs are applicable to the fill height and other conditions indicated. Any change in the conditions invalidates these designs.

Wingwalls referenced by letter apply when the acceptable foundation level is the same for both box and wings. If foundation levels are different, the height of the wingwall shall be adjusted by selection of another lettered wingwall of appropriate height. For wingwall details, refer to standard series BCW for the appropriate fill slope.

For details of extending existing boxes, refer to Standard BCE-01.

For modification of details for skewed culverts, see the Skewed Box Details included in the road plans.

This standard shall be used with the the BCS standard series.

Sheet 1 of 2

SINGLE BOX CULVERTS

STANDARD DETAILS

VIRGINIA DEPARTMENT OF TRANSPORTATION

STRUCTURE AND BRIDGE DIVISION

1002.01

U.S. DEPARTMENT OF TRANSPORTATION
FEDERAL HIGHWAY ADMINISTRATION
EASTERN FEDERAL LANDS HIGHWAY DIVISION
STERLING, VIRGINIA

DETAIL

BOX CULVERT
(SINGLE BARREL)

DETAIL APPROVED FOR USE --/----

REVISED:

DETAIL
602-A

10/24/2006 9:20:05 AM M:\Projects\vlis\st_crolx\nh66(008)\proj_dev\Contract 2\details\boxstd.dgn

REG	STATE	PROJECT	SHEET NO.	TOTAL SHEETS
SE	VI	NH-66(008)	M27	193

BCS-DT

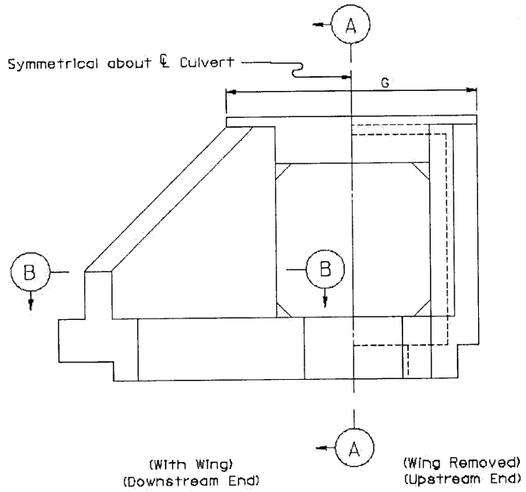

END ELEVATION

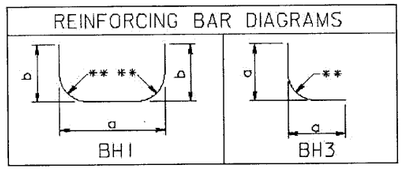

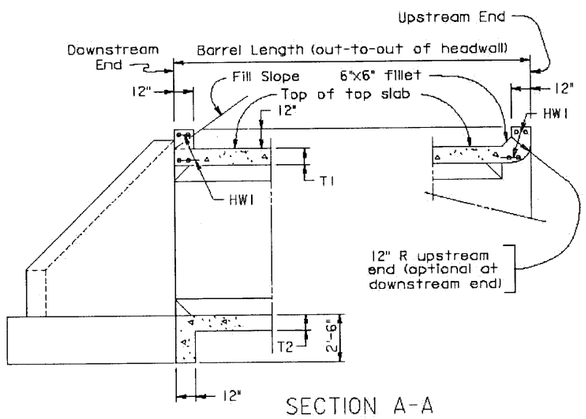

SECTION A-A
(With Wing)

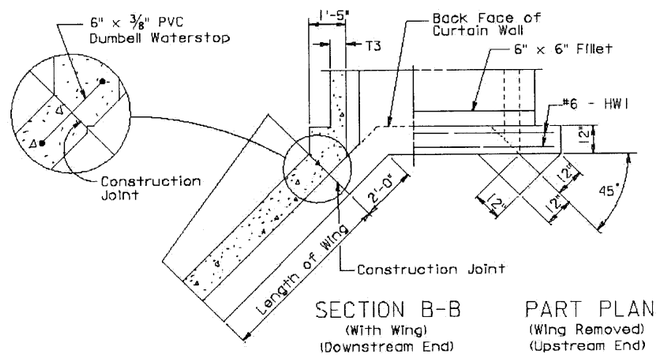

SECTION B-B
(With Wing)
(Downstream End)

PART PLAN
(Wing Removed)
(Upstream End)

Sheet 2 of 2

STRUCTURE AND BRIDGE DIVISION

SINGLE BOX CULVERTS

STANDARD DETAILS

VIRGINIA DEPARTMENT OF TRANSPORTATION

1002.02

U.S. DEPARTMENT OF TRANSPORTATION
FEDERAL HIGHWAY ADMINISTRATION
EASTERN FEDERAL LANDS HIGHWAY DIVISION
STERLING, VIRGINIA

DETAIL

BOX CULVERT
(SINGLE BARREL)

DETAIL APPROVED FOR USE --/----

REVISED:

DETAIL
602-A

10/24/2006 9:20:39 AM M:\Projects\VIS\st_crd\rvh66\008\pro_dev\Contract 2\details\boxstd.dgn

REG	STATE	PROJECT	SHEET NO.	TOTAL SHEETS
SE	VI	NH-66(008)	M28	193

BCS-15

DIMENSIONS					REINFORCING STEEL																							
SPAN	HGHT	T1	T2	T3							BH1					BH2			BH3				BV1				
(FT.)	(FT.)	TOP SLAB (IN.)	BOTTOM SLAB (IN.)	WALL (IN.)	A	B	C	D	E	F	SIZE	SPACING C-C	a	b	LENGTH	SIZE	SPACING C-C	LENGTH	SIZE	SPACING C-C	a	LENGTH	SIZE	SPACING C-C	LENGTH	NO. BL1 BARS	NO. BL2 BARS
3	3	8"	8"	8"	2	2'- 0"	2	2'- 0"	1	1'- 0"	4	12"	4'- 0"	2'- 8"	8'-10"	4	12"	4'- 0"	--	---	-----	-----	4	12"	4'- 0"	16	8
3	4	8"	8"	8"	2	2'- 0"	2	2'- 0"	2	2'- 0"	4	12"	4'- 0"	3'- 2"	9'-10"	4	12"	4'- 0"	--	---	-----	-----	4	12"	5'- 0"	16	12
4	3	8"	8"	8"	3	3'- 0"	3	3'- 0"	1	1'- 0"	4	12"	5'- 0"	2'- 8"	9'-10"	5	12"	5'- 0"	--	---	-----	-----	4	12"	4'- 0"	20	8
4	4	8"	8"	8"	3	3'- 0"	3	3'- 0"	2	2'- 0"	4	12"	5'- 0"	3'- 2"	10'-10"	5	12"	5'- 0"	--	---	-----	-----	4	12"	5'- 0"	20	12
4	5	8"	8"	8"	3	3'- 0"	3	3'- 0"	3	3'- 0"	4	11½"	5'- 0"	3'- 8"	11'-10"	5	11½"	5'- 0"	--	---	-----	-----	4	12"	6'- 0"	20	16
4	6	8"	8"	8"	3	3'- 0"	3	3'- 0"	4	4'- 0"	4	11"	5'- 0"	4'- 2"	12'-10"	5	11"	5'- 0"	--	---	-----	-----	4	12"	7'- 0"	20	20
5	3	8"	8"	8"	4	4'- 0"	4	4'- 0"	1	1'- 0"	4	9½"	6'- 0"	2'- 8"	10'-10"	5	9½"	6'- 0"	--	---	-----	-----	4	11½"	4'- 0"	24	8
5	4	8"	8"	8"	4	4'- 0"	4	4'- 0"	2	2'- 0"	4	9"	6'- 0"	3'- 2"	11'-10"	5	9"	6'- 0"	--	---	-----	-----	4	12"	5'- 0"	24	12
5	5	8"	8"	8"	4	4'- 0"	4	4'- 0"	3	3'- 0"	4	11½"	6'- 0"	3'- 8"	12'-10"	6	11½"	6'- 0"	3	11½"	2'- 6"	4'-10"	4	12"	6'- 0"	24	16
5	6	8"	8"	8"	4	4'- 0"	4	4'- 0"	4	4'- 0"	4	11"	6'- 0"	4'- 2"	13'-10"	6	11"	6'- 0"	--	---	-----	-----	4	12"	7'- 0"	24	20
5	7	8"	8"	8"	4	4'- 0"	4	4'- 0"	5	5'- 0"	4	10½"	6'- 0"	4'- 8"	14'-10"	6	10½"	6'- 0"	--	---	-----	-----	4	12"	8'- 0"	24	24
6	4	8"	8"	8"	5	5'- 0"	5	5'- 0"	2	2'- 0"	5	9½"	7'- 0"	3'- 2"	12'- 8"	6	9½"	7'- 0"	--	---	-----	-----	4	9"	5'- 0"	28	12
6	5	8"	8"	8"	5	5'- 0"	5	5'- 0"	3	3'- 0"	4	9"	7'- 0"	3'- 8"	13'-10"	6	9"	7'- 0"	3	9"	2'- 8⅜"	5'- 2"	4	12"	6'- 0"	28	16
6	6	8"	8"	8"	5	5'- 0"	5	5'- 0"	4	4'- 0"	4	8½"	7'- 0"	4'- 2"	14'-10"	6	8½"	7'- 0"	3	8½"	2'- 8⅜"	5'- 2"	4	12"	7'- 0"	28	20
6	7	8"	8"	8"	5	5'- 0"	5	5'- 0"	5	5'- 0"	4	8½"	7'- 0"	4'- 8"	15'-10"	6	8½"	7'- 0"	3	8½"	2'- 8⅜"	5'- 2"	4	12"	8'- 0"	28	24
6	8	8"	8"	8"	5	5'- 0"	5	5'- 0"	6	6'- 0"	4	8"	7'- 0"	5'- 2"	16'-10"	6	8"	7'- 0"	3	8"	2'- 8⅜"	5'- 2"	4	12"	9'- 0"	28	28
7	4	8"	8"	8"	6	6'- 0"	6	6'- 0"	2	2'- 0"	5	8"	8'- 0"	3'- 2"	13'- 8"	6	8"	8'- 0"	--	---	-----	-----	4	6"	5'- 0"	32	12
7	6	8¼"	8¼"	8"	6	6'- 0"	6	6'- 0"	4	4'- 0"	4	7½"	8'- 0"	4'- 2¼"	15'-10"	6	7½"	8'- 0"	3	7½"	2'-10¾"	5'- 7"	4	11"	7'- 0"	32	20
7	8	8¼"	8¼"	8"	6	6'- 0"	6	6'- 0"	6	6'- 0"	4	7"	8'- 0"	5'- 2¼"	17'-10"	6	7"	8'- 0"	3	7"	2'-10¾"	5'- 7"	4	12"	9'- 0"	32	28
7	10	8¼"	8¼"	8"	6	6'- 0"	6	6'- 0"	8	8'- 0"	4	6½"	8'- 0"	6'- 2¼"	19'-10"	6	6½"	8'- 0"	3	6½"	2'-10¾"	5'- 7"	4	12"	11'- 0"	32	36
8	4	9"	9"	8"	7	7'- 0"	7	7'- 0"	2	2'- 0"	5	7"	9'- 0"	3'- 3"	14'-10"	6	7"	9'- 0"	--	---	-----	-----	4	6"	5'- 2"	36	12
8	6	9"	9"	8"	7	7'- 0"	7	7'- 0"	4	4'- 0"	4	6½"	9'- 0"	4'- 3"	17'- 0"	6	6½"	9'- 0"	3	6½"	3'- 1¼"	6'- 0"	4	8"	7'- 2"	36	20
8	8	9¼"	9¼"	8"	7	7'- 0"	7	7'- 0"	6	6'- 0"	5	6"	9'- 0"	5'- 3¼"	18'-11"	6	6"	9'- 0"	--	---	-----	-----	4	12"	9'- 2"	36	28
8	10	9¼"	9¼"	8"	7	7'- 0"	7	7'- 0"	8	8'- 0"	5	9"	9'- 0"	6'- 3¼"	20'-11"	8	9"	9'- 0"	3	9"	3'- 1¼"	6'- 0"	4	12"	11'- 2'	36	36
9	4	9¾"	9¾"	8"	8	8'- 0"	8	8'- 0"	2	2'- 0"	5	6"	10'- 0"	3'- 3¾"	16'- 0"	6	6"	10'- 0"	--	---	-----	-----	6	9½"	5'- 3"	40	12
9	6	10"	10"	8"	8	8'- 0"	8	8'- 0"	4	4'- 0"	5	9"	10'- 0"	4'- 4"	18'- 0"	8	9"	10'- 0"	3	9"	3'- 3⅝"	6'- 5"	4	7½"	7'- 4"	40	20
9	8	10"	10"	8"	8	8'- 0"	8	8'- 0"	6	6'- 0"	5	9"	10'- 0"	5'- 4"	20'- 0"	8	9"	10'- 0"	3	9"	3'- 3⅝"	6'- 5"	4	9½"	9'- 4"	40	28
9	10	10¼"	10¼"	8"	8	8'- 0"	8	8'- 0"	8	8'- 0"	6	8"	10'- 0"	6'- 4¼"	21'-11"	8	8"	10'- 0"	--	---	-----	-----	4	12"	11'- 5'	40	36
9	12	10¼"	10¼"	8"	8	8'- 0"	8	8'- 0"	10	10'- 0"	5	7½"	10'- 0"	7'- 4¼"	24'- 1"	8	7½"	10'- 0"	4	7½"	3'- 3⅝"	6'- 4"	4	7½"	13'- 5'	40	44
10	4	10½"	10½"	8"	9	9'- 0"	9	9'- 0"	2	2'- 0"	5	5½"	11'- 0"	3'- 4½"	17'- 1"	6	5½"	11'- 0"	--	---	-----	-----	6	8"	5'- 5"	44	12
10	6	10¾"	10¾"	8"	9	9'- 0"	9	9'- 0"	4	4'- 0"	6	8"	11'- 0"	4'- 4¾"	19'- 0"	8	8"	11'- 0"	--	---	-----	-----	4	6½"	7'- 5"	44	20
10	8	11"	11"	8"	9	9'- 0"	9	9'- 0"	6	6'- 0"	6	6"	11'- 0"	5'- 5"	21'- 0"	7	6"	11'- 0"	--	---	-----	-----	4	11"	9'- 6"	44	28
10	10	11"	11"	8"	9	9'- 0"	9	9'- 0"	8	8'- 0"	5	7½"	11'- 0"	6'- 5"	23'- 2"	8	7½"	11'- 0"	3	7½"	3'- 6"	6'-10"	4	12"	11'- 6"	44	36
10	12	11¼"	11¼"	8"	9	9'- 0"	9	9'- 0"	10	10'- 0"	6	6"	11'- 0"	7'- 5¼"	25'- 1"	7	6"	11'- 0"	--	---	-----	-----	4	9"	13'- 6"	44	44
12	6	12¾"	12¾"	8"	11	11'- 0"	11	11'- 0"	4	4'- 0"	5	5½"	13'- 0"	4'- 6¾"	21'- 6"	7	5½"	13'- 0"	--	---	-----	-----	5	8"	7'- 9"	52	20
12	8	12¾"	12¾"	8"	11	11'- 0"	11	11'- 0"	6	6'- 0"	6	6½"	13'- 0"	5'- 6¾"	23'- 4"	8	6½"	13'- 0"	--	---	-----	-----	4	9"	9'- 9"	52	28
12	10	13"	13"	8"	11	11'- 0"	11	11'- 0"	8	8'- 0"	5	6½"	13'- 0"	6'- 7"	25'- 6"	8	6½"	13'- 0"	3	6½"	3'-10¾"	7'- 7"	4	12"	11'-10'	52	36
12	12	13"	13"	8"	11	11'- 0"	11	11'- 0"	10	10'- 0"	6	5"	13'- 0"	7'- 7"	27'- 4"	7	5"	13'- 0"	--	---	-----	-----	4	12"	13'-10'	52	44

Sheet 1 of 2

For Typical Section, notes and other details, refer to standard BCS-DT.

SINGLE BOX CULVERTS

10 TO 15 FT. FILLS

VIRGINIA DEPARTMENT OF TRANSPORTATION

STRUCTURE AND BRIDGE DIVISION

1002.09

U.S. DEPARTMENT OF TRANSPORTATION
FEDERAL HIGHWAY ADMINISTRATION
EASTERN FEDERAL LANDS HIGHWAY DIVISION
STERLING, VIRGINIA

DETAIL

BOX CULVERT
(SINGLE BARREL)

DETAIL APPROVED FOR USE --/----

REVISED:

DETAIL
602-A

10/24/2006 9:21:10 AM W:\Projects\VIIS\st_crd\NH66(008)\proj_dev\Contract 2\details\boxstd.dgn

REG	STATE	PROJECT	SHEET NO.	TOTAL SHEETS
SE	VI	NH-66(008)	M29	193

BCS-15

SPAN (FT.)	HGHT (FT.)	REINFORCING STEEL (LBS/LONG. JT)	QUAN./LF CONCRETE CLASS A4 (CY/LF)	QUAN./LF REINFORCING STEEL (LBS/LF)	HEADWALLS G HEADWALL LENGTH	HEADWALLS HWI SIZE	HEADWALLS HWI LENGTH	INLET CONCRETE CL. A4 (CY)	INLET REINFORCING STEEL (LBS)	OUTLET CONCRETE CL. A4 (CY)	OUTLET REINFORCING STEEL (LBS)	WINGWALL
3	3	16.184	0.401	36.185	5'-10"	6	5'- 6"	1.038	33.044	1.042	33.044	A
3	4	17.596	0.450	40.361	5'-10"	6	5'- 6"	1.131	33.044	1.134	33.044	C
4	3	19.524	0.450	45.279	6'-10"	6	6'- 6"	1.139	39.052	1.146	39.052	A
4	4	20.936	0.499	49.455	6'-10"	6	6'- 6"	1.232	39.052	1.239	39.052	C
4	5	22.348	0.548	54.772	6'-10"	6	6'- 6"	1.324	39.052	1.332	39.052	E
4	6	23.760	0.597	60.314	6'-10"	6	6'- 6"	1.417	39.052	1.424	39.052	G
5	3	22.864	0.498	58.708	7'-10"	6	7'- 6"	1.240	45.060	1.251	45.060	A
5	4	24.276	0.547	64.991	7'-10"	6	7'- 6"	1.333	45.060	1.343	45.060	C
5	5	25.688	0.596	74.348	7'-10"	6	7'- 6"	1.426	45.060	1.436	45.060	E
5	6	27.100	0.645	72.728	7'-10"	6	7'- 6"	1.518	45.060	1.529	45.060	G
5	7	28.512	0.694	78.991	7'-10"	6	7'- 6"	1.611	45.060	1.621	45.060	I
6	4	27.616	0.594	92.060	8'-10"	6	8'- 6"	1.434	51.068	1.448	51.068	C
6	5	29.028	0.643	95.776	8'-10"	6	8'- 6"	1.527	51.068	1.541	51.068	E
6	6	30.440	0.692	104.210	8'-10"	6	8'- 6"	1.620	51.068	1.633	51.068	G
6	7	31.852	0.741	108.936	8'-10"	6	8'- 6"	1.712	51.068	1.726	51.068	I
6	8	33.264	0.790	118.188	8'-10"	6	8'- 6"	1.805	51.068	1.819	51.068	K
7	4	30.956	0.642	118.059	9'-10"	6	9'- 6"	1.535	57.076	1.552	57.076	C
7	6	33.780	0.753	124.830	9'-10"	6	9'- 6"	1.719	57.076	1.736	57.076	G
7	8	36.604	0.851	140.365	9'-10"	6	9'- 6"	1.905	57.076	1.922	57.076	K
7	10	39.428	0.948	158.396	9'-10"	6	9'- 6"	2.090	57.076	2.107	57.076	O
8	4	34.296	0.747	141.757	10'-10"	6	10'- 6"	1.627	63.084	1.648	63.084	C
8	6	37.120	0.845	154.432	10'-10"	6	10'- 6"	1.813	63.084	1.833	63.084	G
8	8	39.944	0.956	179.815	10'-10"	6	10'- 6"	2.014	63.084	2.035	63.084	L
8	10	42.768	1.054	186.791	10'-10"	6	10'- 6"	2.200	63.084	2.220	63.084	P
9	4	37.636	0.848	177.985	11'-10"	6	11'- 6"	1.735	69.092	1.758	69.092	D
9	6	40.460	0.962	184.047	11'-10"	6	11'- 6"	1.917	69.092	1.941	69.092	H
9	8	43.284	1.060	192.693	11'-10"	6	11'- 6"	2.102	69.092	2.126	69.092	L
9	10	46.108	1.172	234.365	11'-10"	6	11'- 6"	2.285	69.092	2.308	69.092	P
9	12	48.932	1.268	264.840	11'-10"	6	11'- 6"	2.470	69.092	2.494	69.092	T
10	4	40.976	0.958	208.158	12'-10"	6	12'- 6"	1.819	75.100	1.846	75.100	D
10	6	43.800	1.073	228.929	12'-10"	6	12'- 6"	2.000	75.100	2.027	75.100	H
10	8	46.624	1.186	269.870	12'-10"	6	12'- 6"	2.182	75.100	2.209	75.100	L
10	10	49.448	1.286	246.041	12'-10"	6	12'- 6"	2.367	75.100	2.394	75.100	P
10	12	52.272	1.398	310.621	12'-10"	6	12'- 6"	2.549	75.100	2.576	75.100	T
12	6	50.480	1.366	280.309	14'-10"	6	14'- 6"	2.143	87.116	2.176	87.116	H
12	8	53.304	1.462	320.195	14'-10"	6	14'- 6"	2.328	87.116	2.362	87.116	L
12	10	56.128	1.582	311.500	14'-10"	6	14'- 6"	2.508	87.116	2.542	87.116	P
12	12	58.952	1.674	394.369	14'-10"	6	14'- 6"	2.693	87.116	2.727	87.116	T

Sheet 2 of 2

STRUCTURE AND BRIDGE DIVISION

SINGLE BOX CULVERTS

10 TO 15 FT. FILLS

VIRGINIA DEPARTMENT OF TRANSPORTATION

1002.10

U.S. DEPARTMENT OF TRANSPORTATION
FEDERAL HIGHWAY ADMINISTRATION
EASTERN FEDERAL LANDS HIGHWAY DIVISION
STERLING, VIRGINIA

DETAIL

BOX CULVERT
(SINGLE BARREL)

DETAIL APPROVED FOR USE --/----

REVISED:

DETAIL
602-A

10/24/2006 9:21:38 AM M:\Projects\vi\st_crol\vh56\008\proj_dev\Contract 2\details\boxstd.dgn

REG	STATE	PROJECT	SHEET NO.	TOTAL SHEETS
SE	VI	NH-66(008)	M30	193

BCS-20

DIMENSIONS					REINFORCING STEEL																						
SPAN	HGHT	T1	T2	T3							BH1					BH2			BH3				BV1				
(FT.)	(FT.)	TOP SLAB (IN.)	BOTTOM SLAB (IN.)	WALL (IN.)	A	B	C	D	E	F	SIZE	SPACING C-C	a	b	LENGTH	SIZE	SPACING C-C	LENGTH	SIZE	SPACING C-C	a	LENGTH	SIZE	SPACING C-C	LENGTH	NO. BL1 BARS	NO. BL2 BARS
3	3	8"	8"	8"	2	2'- 0"	2	2'- 0"	1	1'- 0"	4	12"	4'- 0"	2'- 8"	8'-10"	5	12"	4'- 0"	3	12"	2'- 1¼"	4'- 0"	4	12"	4'- 0"	16	8
3	4	8"	8"	8"	2	2'- 0"	2	2'- 0"	2	2'- 0"	4	12"	4'- 0"	3'- 2"	9'-10"	5	12"	4'- 0"	--	---	-----	-----	4	12"	5'- 0"	16	12
4	3	8"	8"	8"	3	3'- 0"	3	3'- 0"	1	1'- 0"	4	10½"	5'- 0"	2'- 8"	9'-10"	5	10½"	5'- 0"	--	---	-----	-----	4	12"	4'- 0"	20	8
4	4	8"	8"	8"	3	3'- 0"	3	3'- 0"	2	2'- 0"	4	10"	5'- 0"	3'- 2"	10'-10"	5	10"	5'- 0"	--	---	-----	-----	4	12"	5'- 0"	20	12
4	5	8"	8"	8"	3	3'- 0"	3	3'- 0"	3	3'- 0"	4	9½"	5'- 0"	3'- 8"	11'-10"	5	9½"	5'- 0"	--	---	-----	-----	4	12"	6'- 0"	20	16
4	6	8"	8"	8"	3	3'- 0"	3	3'- 0"	4	4'- 0"	4	9½"	5'- 0"	4'- 2"	12'-10"	5	9½"	5'- 0"	--	---	-----	-----	4	12"	7'- 0"	20	20
5	3	8"	8"	8"	4	4'- 0"	4	4'- 0"	1	1'- 0"	5	10½"	6'- 0"	2'- 8"	10'- 8"	6	10½"	6'- 0"	--	---	-----	-----	4	9"	4'- 0"	24	8
5	4	8"	8"	8"	4	4'- 0"	4	4'- 0"	2	2'- 0"	4	10"	6'- 0"	3'- 2"	11'-10"	6	10"	6'- 0"	3	10"	2'- 6"	4'-10"	4	12"	5'- 0"	24	12
5	5	8"	8"	8"	4	4'- 0"	4	4'- 0"	3	3'- 0"	4	9½"	6'- 0"	3'- 8"	12'-10"	6	9½"	6'- 0"	3	9½"	2'- 6"	4'-10"	4	12"	6'- 0"	24	16
5	6	8"	8"	8"	4	4'- 0"	4	4'- 0"	4	4'- 0"	4	9"	6'- 0"	4'- 2"	13'-10"	6	9"	6'- 0"	--	---	-----	-----	4	12"	7'- 0"	24	20
5	7	8"	8"	8"	4	4'- 0"	4	4'- 0"	5	5'- 0"	4	9"	6'- 0"	4'- 8"	14'-10"	6	9"	6'- 0"	--	---	-----	-----	4	12"	8'- 0"	24	24
6	4	8¾"	8¾"	8"	5	5'- 0"	5	5'- 0"	2	2'- 0"	5	8"	7'- 0"	3'- 2¾"	12'-10"	6	8"	7'- 0"	--	---	-----	-----	4	9"	5'- 2"	28	12
6	5	8¾"	8¾"	8"	5	5'- 0"	5	5'- 0"	3	3'- 0"	4	8"	7'- 0"	3'- 8¾"	13'-11"	6	8"	7'- 0"	3	8"	2'- 8⅜"	5'- 2"	4	12"	6'- 2"	28	16
6	6	8¾"	8¾"	8"	5	5'- 0"	5	5'- 0"	4	4'- 0"	4	7½"	7'- 0"	4'- 2¾"	14'-11"	6	7½"	7'- 0"	3	7½"	2'- 8⅜"	5'- 2"	4	12"	7'- 2"	28	20
6	7	8¾"	8¾"	8"	5	5'- 0"	5	5'- 0"	5	5'- 0"	4	7½"	7'- 0"	4'- 8¾"	15'-11"	6	7½"	7'- 0"	3	7½"	2'- 8⅜"	5'- 2"	4	12"	8'- 2"	28	24
6	8	8¾"	8¾"	8"	5	5'- 0"	5	5'- 0"	6	6'- 0"	5	7"	7'- 0"	5'- 2¾"	16'-10"	6	7"	7'- 0"	--	---	-----	-----	4	12"	9'- 2"	28	28
7	4	9¾"	9¾"	8"	6	6'- 0"	6	6'- 0"	2	2'- 0"	4	7"	8'- 0"	3'- 3¾"	14'- 1"	6	7"	8'- 0"	3	7"	2'-10¾"	5'- 7"	4	7½"	5'- 3"	32	12
7	6	10"	10"	8"	6	6'- 0"	6	6'- 0"	4	4'- 0"	4	6½"	8'- 0"	4'- 4"	16'- 2"	6	6½"	8'- 0"	--	---	-----	-----	4	12"	7'- 4"	32	20
7	8	10"	10"	8"	6	6'- 0"	6	6'- 0"	6	6'- 0"	5	6½"	8'- 0"	5'- 4"	18'- 0"	6	6½"	8'- 0"	--	---	-----	-----	4	12"	9'- 4"	32	28
7	10	10"	10"	8"	6	6'- 0"	6	6'- 0"	8	8'- 0"	5	7½"	8'- 0"	6'- 4"	20'- 0"	7	7½"	8'- 0"	3	7½"	2'-10¾"	5'- 7"	4	9½"	11'- 4"	32	36
8	4	10¾"	10¾"	8"	7	7'- 0"	7	7'- 0"	2	2'- 0"	4	6"	9'- 0"	3'- 4¾"	15'- 3"	6	6"	9'- 0"	3	6"	3'- 1¼"	6'- 0"	4	6½"	5'- 5"	36	12
8	6	11"	11"	8"	7	7'- 0"	7	7'- 0"	4	4'- 0"	5	7"	9'- 0"	4'- 5"	17'- 2"	7	7"	9'- 0"	--	---	-----	-----	4	11"	7'- 6"	36	20
8	8	11¼"	11¼"	8"	7	7'- 0"	7	7'- 0"	6	6'- 0"	5	9"	9'- 0"	5'- 5¼"	19'- 3"	8	9"	9'- 0"	3	9"	3'- 1¼"	6'- 0"	4	12"	9'- 6"	36	28
8	10	11¼"	11¼"	8"	7	7'- 0"	7	7'- 0"	8	8'- 0"	5	5½"	9'- 0"	6'- 5¼"	21'- 3"	6	5½"	9'- 0"	--	---	-----	-----	4	10½"	11'- 6"	36	36
9	4	12"	12"	8"	8	8'- 0"	8	8'- 0"	2	2'- 0"	4	5½"	10'- 0"	3'- 6"	16'- 6"	6	5½"	10'- 0"	3	5½"	3'- 3⅝"	6'- 5"	4	6"	5'- 8"	40	12
9	6	12¼"	12¼"	8"	8	8'- 0"	8	8'- 0"	4	4'- 0"	5	8"	10'- 0"	4'- 6¼"	18'- 5"	8	8"	10'- 0"	--	---	-----	-----	4	10"	7'- 9"	40	20
9	8	12¼"	12¼"	8"	8	8'- 0"	8	8'- 0"	6	6'- 0"	4	6½"	10'- 0"	5'- 6¼"	20'- 6"	7	6½"	10'- 0"	3	6½"	3'- 3⅝"	6'- 5"	4	12"	9'- 9"	40	28
9	10	12½"	12½"	8"	8	8'- 0"	8	8'- 0"	8	8'- 0"	5	6"	10'- 0"	6'- 6½"	22'- 5"	7	6"	10'- 0"	--	---	-----	-----	4	12"	11'- 9"	40	36
9	12	12½"	12½"	8"	8	8'- 0"	8	8'- 0"	10	10'- 0"	6	7½"	10'- 0"	7'- 6½"	24'- 3"	8	7½"	10'- 0"	3	7½"	3'- 3⅝"	6'- 5"	4	5½"	13'- 9"	40	44
10	4	13"	13"	8"	9	9'- 0"	9	9'- 0"	2	2'- 0"	5	6"	11'- 0"	3'- 7"	17'- 6"	7	6"	11'- 0"	--	---	-----	-----	4	5"	5'-10"	44	12
10	6	13"	13"	8"	9	9'- 0"	9	9'- 0"	4	4'- 0"	5	7½"	11'- 0"	4'- 7"	19'- 6"	8	7½"	11'- 0"	3	7½"	3'- 6"	6'-10"	4	8"	7'-10"	44	20
10	8	13"	13"	8"	9	9'- 0"	9	9'- 0"	6	6'- 0"	5	7½"	11'- 0"	5'- 7"	21'- 6"	8	7½"	11'- 0"	3	7½"	3'- 6"	6'-10"	4	12"	9'-10"	44	28
10	10	13"	13"	8"	9	9'- 0"	9	9'- 0"	8	8'- 0"	5	5½"	11'- 0"	6'- 7"	23'- 6"	7	5½"	11'- 0"	--	---	-----	-----	4	12"	11'-10"	44	36
10	12	13"	13"	8"	9	9'- 0"	9	9'- 0"	10	10'- 0"	7	7"	11'- 0"	7'- 7"	25'- 3"	8	7"	11'- 0"	--	---	-----	-----	4	6"	13'-10"	44	44
12	6	15"	15"	8"	11	11'- 0"	11	11'- 0"	4	4'- 0"	5	6½"	13'- 0"	4'- 9"	21'-10"	8	6½"	13'- 0"	--	---	-----	-----	4	6"	8'- 2"	52	20
12	8	15¼"	15¼"	8"	11	11'- 0"	11	11'- 0"	6	6'- 0"	6	6"	13'- 0"	5'- 9¼"	23'- 9"	8	6"	13'- 0"	--	---	-----	-----	4	10"	10'- 3"	52	28
12	10	15¼"	15¼"	8"	11	11'- 0"	11	11'- 0"	8	8'- 0"	4	6"	13'- 0"	6'- 9¼"	26'- 0"	8	6"	13'- 0"	4	6"	3'-10¾"	7'- 6"	4	12"	12'- 3"	52	36
12	12	15¼"	15¼"	8"	11	11'- 0"	11	11'- 0"	10	10'- 0"	6	6"	13'- 0"	7'- 9¼"	27'- 9"	8	6"	13'- 0"	--	---	-----	-----	4	6½"	14'- 3"	52	44

Sheet 1 of 2

For Typical Section, notes and other details, refer to standard BCS-DT.

SINGLE BOX CULVERTS

15 TO 20 FT. FILLS

VIRGINIA DEPARTMENT OF TRANSPORTATION

STRUCTURE AND BRIDGE DIVISION

1002.11

U.S. DEPARTMENT OF TRANSPORTATION
FEDERAL HIGHWAY ADMINISTRATION
EASTERN FEDERAL LANDS HIGHWAY DIVISION
STERLING, VIRGINIA

DETAIL

BOX CULVERT
(SINGLE BARREL)

DETAIL APPROVED FOR USE --/----

REVISED:

DETAIL
602-A

10/24/2006 9:22:11 AM M:\Projects\wlfs\st_crafx\nh66\008\proj_dev\Contract 2\details\boxstd.dgn

REG	STATE	PROJECT	SHEET NO.	TOTAL SHEETS
SE	VI	NH-66(008)	M31	193

BCS-20

SPAN (FT.)	HGHT (FT.)	REINFORCING STEEL (LBS/LONG. JT)	QUAN./LF CONCRETE CLASS A4 (CY/LF)	QUAN./LF REINFORCING STEEL (LBS/LF)	HEADWALLS G HEADWALL LENGTH	HEADWALLS HW1 SIZE	HEADWALLS HW1 LENGTH	INLET CONCRETE CL. A4 (CY)	INLET REINFORCING STEEL (LBS)	OUTLET CONCRETE CL. A4 (CY)	OUTLET REINFORCING STEEL (LBS)	WINGWALL
3	3	16.184	0.400	45.201	5'-10"	6	5'- 6"	1.038	33.044	1.042	33.044	A
3	4	17.596	0.450	43.361	5'-10"	6	5'- 6"	1.131	33.044	1.134	33.044	C
4	3	19.524	0.450	48.646	6'-10"	6	6'- 6"	1.139	39.052	1.146	39.052	A
4	4	20.936	0.498	54.436	6'-10"	6	6'- 6"	1.232	39.052	1.239	39.052	C
4	5	22.348	0.547	60.536	6'-10"	6	6'- 6"	1.324	39.052	1.332	39.052	E
4	6	23.760	0.596	65.064	6'-10"	6	6'- 6"	1.417	39.052	1.424	39.052	G
5	3	22.864	0.497	72.194	7'-10"	6	7'- 6"	1.240	45.060	1.251	45.060	A
5	4	24.276	0.546	76.547	7'-10"	6	7'- 6"	1.333	45.060	1.343	45.060	C
5	5	25.688	0.595	83.671	7'-10"	6	7'- 6"	1.426	45.060	1.436	45.060	E
5	6	27.100	0.645	81.578	7'-10"	6	7'- 6"	1.518	45.060	1.529	45.060	G
5	7	28.512	0.694	86.199	7'-10"	6	7'- 6"	1.611	45.060	1.621	45.060	I
6	4	27.616	0.627	104.117	8'-10"	6	8'- 6"	1.432	51.068	1.446	51.068	C
6	5	29.028	0.677	104.046	8'-10"	6	8'- 6"	1.524	51.068	1.538	51.068	E
6	6	30.440	0.725	113.762	8'-10"	6	8'- 6"	1.617	51.068	1.631	51.068	G
6	7	31.852	0.774	118.740	8'-10"	6	8'- 6"	1.710	51.068	1.724	51.068	I
6	8	33.264	0.822	137.723	8'-10"	6	8'- 6"	1.803	51.068	1.816	51.068	K
7	4	30.956	0.731	124.958	9'-10"	6	9'- 6"	1.543	57.076	1.560	57.076	D
7	6	33.780	0.843	122.935	9'-10"	6	9'- 6"	1.727	57.076	1.744	57.076	H
7	8	36.604	0.939	158.059	9'-10"	6	9'- 6"	1.912	57.076	1.929	57.076	L
7	10	39.428	1.036	186.552	9'-10"	6	9'- 6"	2.098	57.076	2.115	57.076	P
8	4	34.296	0.847	154.788	10'-10"	6	10'- 6"	1.630	63.084	1.650	63.084	D
8	6	37.120	0.959	166.959	10'-10"	6	10'- 6"	1.813	63.084	1.833	63.084	H
8	8	39.944	1.072	176.921	10'-10"	6	10'- 6"	1.996	63.084	2.016	63.084	L
8	10	42.768	1.168	210.845	10'-10"	6	10'- 6"	2.181	63.084	2.202	63.084	P
9	4	37.636	0.991	181.067	11'-10"	6	11'- 6"	1.707	69.092	1.731	69.092	D
9	6	40.460	1.105	184.391	11'-10"	6	11'- 6"	1.889	69.092	1.913	69.092	H
9	8	43.284	1.203	194.124	11'-10"	6	11'- 6"	2.075	69.092	2.098	69.092	L
9	10	46.108	1.315	231.236	11'-10"	6	11'- 6"	2.257	69.092	2.281	69.092	P
9	12	48.932	1.409	300.780	11'-10"	6	11'- 6"	2.442	69.092	2.466	69.092	T
10	4	40.976	1.132	215.554	12'-10"	6	12'- 6"	1.780	75.100	1.807	75.100	D
10	6	43.800	1.230	228.121	12'-10"	6	12'- 6"	1.966	75.100	1.993	75.100	H
10	8	46.624	1.328	235.243	12'-10"	6	12'- 6"	2.151	75.100	2.178	75.100	L
10	10	49.448	1.425	263.804	12'-10"	6	12'- 6"	2.337	75.100	2.364	75.100	P
10	12	52.272	1.516	360.548	12'-10"	6	12'- 6"	2.522	75.100	2.549	75.100	T
12	6	50.480	1.552	276.319	14'-10"	6	14'- 6"	2.094	87.116	2.128	87.116	H
12	8	53.304	1.666	343.227	14'-10"	6	14'- 6"	2.293	87.116	2.326	87.116	M
12	10	56.128	1.767	313.030	14'-10"	6	14'- 6"	2.478	87.116	2.512	87.116	Q
12	12	58.952	1.860	391.989	14'-10"	6	14'- 6"	2.663	87.116	2.697	87.116	U

Sheet 2 of 2

STRUCTURE AND BRIDGE DIVISION

SINGLE BOX CULVERTS

15 TO 20 FT. FILLS

VIRGINIA DEPARTMENT OF TRANSPORTATION

1002.12

U.S. DEPARTMENT OF TRANSPORTATION
FEDERAL HIGHWAY ADMINISTRATION
EASTERN FEDERAL LANDS HIGHWAY DIVISION
STERLING, VIRGINIA

DETAIL

BOX CULVERT
(SINGLE BARREL)

DETAIL APPROVED FOR USE --/----

REVISED:

DETAIL
602-A

10/24/2006 9:22:44 AM M:\Projects\flsst_crak\nh66(008)proj_dev\Contract 2\details\boxstd.dgn

REG	STATE	PROJECT	SHEET NO.	TOTAL SHEETS
SE	VI	NH 66(008)	M32	193

BCD-DT

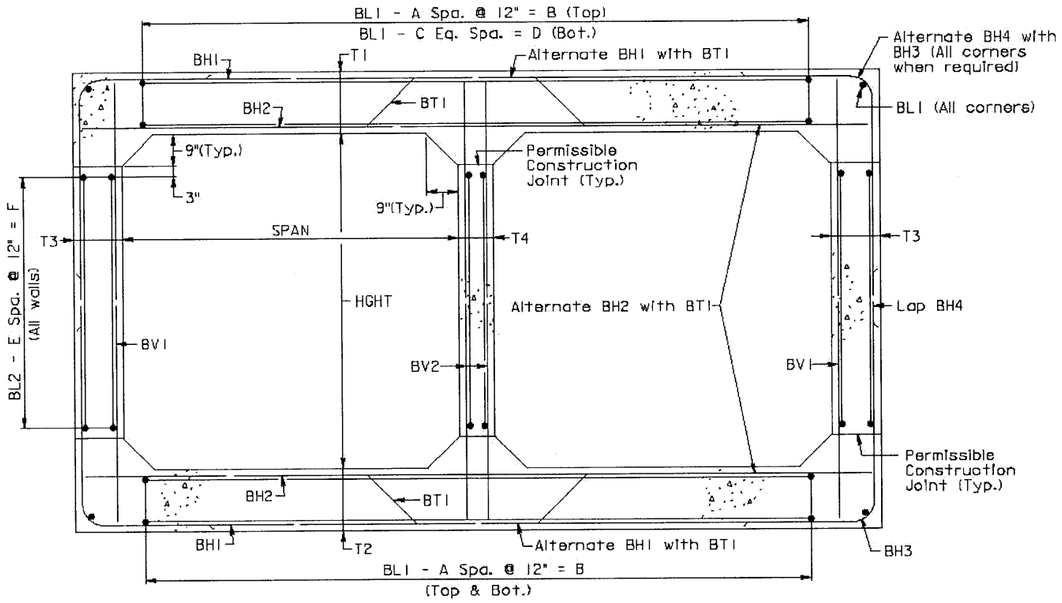

TYPICAL SECTION

Sheet 1 of 3

DOUBLE BOX CULVERTS

STANDARD DETAILS

VIRGINIA DEPARTMENT OF TRANSPORTATION

1003.01

STRUCTURE AND BRIDGE DIVISION

U.S. DEPARTMENT OF TRANSPORTATION
FEDERAL HIGHWAY ADMINISTRATION
EASTERN FEDERAL LANDS HIGHWAY DIVISION
STERLING, VIRGINIA

DETAIL

BOX CULVERT
(DOUBLE BARREL)

DETAIL APPROVED FOR USE --/----

REVISED:

DETAIL
602-B

10/24/2006 9:23:55 AM M:\Projects\vlls\st_crolx\nh66(008)\proj_dev\Contract 2\details\boxstd2.dgn

REG	STATE	PROJECT	SHEET NO.	TOTAL SHEETS
SE	VI	NH 66(008)	M33	193

BCD-DT

GENERAL NOTE

Capacity: HS20-44 Loading and Alternate Military Loading.

Specifications:

Construction - Va. Department of Transportation Road and Bridge Specifications, 1991.
Design - AASHTO Standard Specifications for Highway Bridges, 1983, Including Interim Specifications, 1984, 1985 and VDOT Modifications, using Load Factor Design.

All concrete shall be Class A4.

Deformed reinforcing bars shall conform to ASTM A615, Grade 60. All reinforcing bar dimensions on the detailed drawings are to centers of bars except where otherwise noted and are subject to fabrication and construction tolerances.

Construction joints shall be constructed and bonded in accordance with the current Road and Bridge Specifications.

Barrels more than 35' in length shall be poured in sections by providing vertical construction joints, not exceeding 25' between joints nor more than 30' from ends of barrels.

** All bends shall be made with a pin diameter as listed in TABLE A except for Bars BH3 & BH4 which shall have a pin diameter of 24 bar diameters.

Dimensions on bar diagrams are out-to-out of bars. Bars are straight and #4 in size unless otherwise shown. BL2 shall be #3 in size.

The number of BL1 & BL2 bars shown in the table is the number of longitudinal bars shown in the Typical Section and may not equal the total number of bars required. BL1 & BL2 shall have a lap of 30 bar diameters at splices. At construction joints, first placed bars shall project 30 bar diameters beyond the joint. Estimated QUAN./LF shown for reinforcing steel does not include quantity for laps of BL1 & BL2 bars. The additional weight per longitudinal lap is shown in the table.

The centers of main reinforcing bars shall be 2" from the face of the concrete.

When concrete protective coating is required, all steel shall be epoxy-coated. All reinforcing steel for culverts under 0 to 2 foot fills shall be epoxy-coated.

At the Contractor's option, BV1 & BV2 bars may be spliced at the permissible construction joint in order to facilitate construction. No additional compensation shall be provided for the increase in reinforcing steel quantity due to the splices.

Bar HW2 shall be 4" less than culvert height in length.

Headwall quantities shown assume wingwalls are to be built at a 45° angle to the headwall.

The designs are applicable to the fill height and other conditions indicated. Any change in the conditions invalidates these designs.

Wingwalls referenced by letter apply when the acceptable foundation level is the same for both box and wings. If foundation levels are different, the height of the wingwall shall be adjusted by selection of another lettered wingwall of appropriate height. For wingwall details, refer to standard series BCW for the appropriate fill slope.

For details of extending existing boxes, refer to Standard BCE-01.

For modification of details for skewed culverts, see the Skewed Box Details included in the road plans.

This standard shall be used with the BCD standard series.

Sheet 2 of 3

STRUCTURE AND BRIDGE DIVISION

DOUBLE BOX CULVERTS

STANDARD DETAILS

VIRGINIA DEPARTMENT OF TRANSPORTATION

1003.02

U.S. DEPARTMENT OF TRANSPORTATION
FEDERAL HIGHWAY ADMINISTRATION
EASTERN FEDERAL LANDS HIGHWAY DIVISION
STERLING, VIRGINIA

DETAIL

BOX CULVERT
(DOUBLE BARREL)

DETAIL APPROVED FOR USE --/----
REVISED:

DETAIL
602-B

10/24/2006 9:24:33 AM M:\Projects\wlls\st_crd\x\nh66(008)\proj_dev\Contract 2\details\boxstd2.dgn

REG	STATE	PROJECT	SHEET NO.	TOTAL SHEETS
SE	VI	NH 66(008)	M34	193

BCD-DT

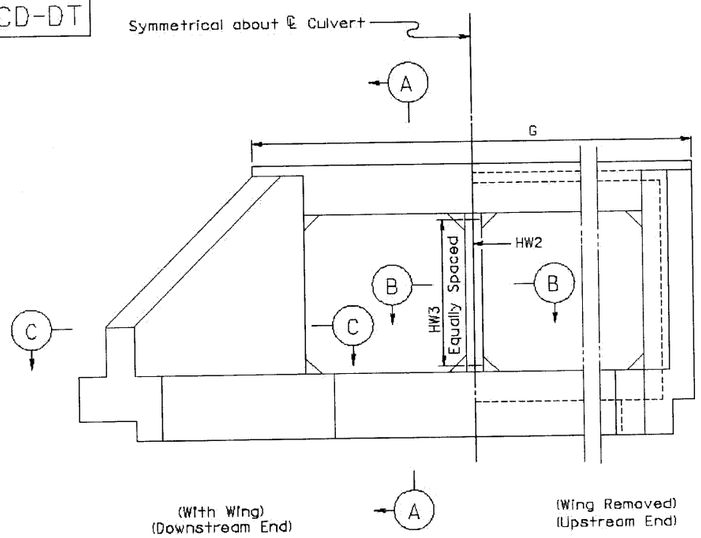

END ELEVATION

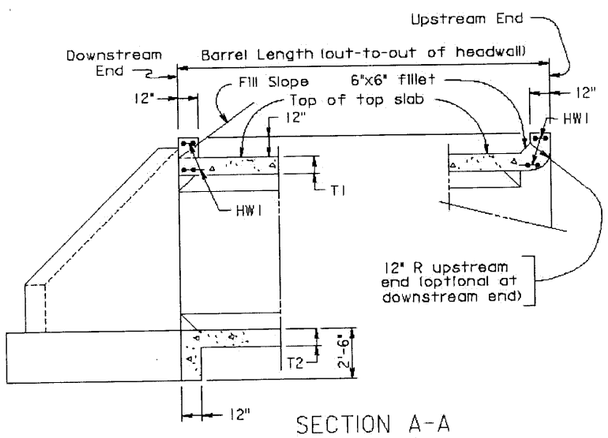

SECTION A-A
(With Wing)

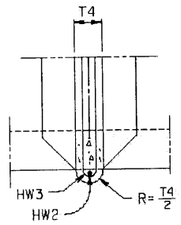

PART SECTION B-B
UPSTREAM END
(Optional at downstream end)

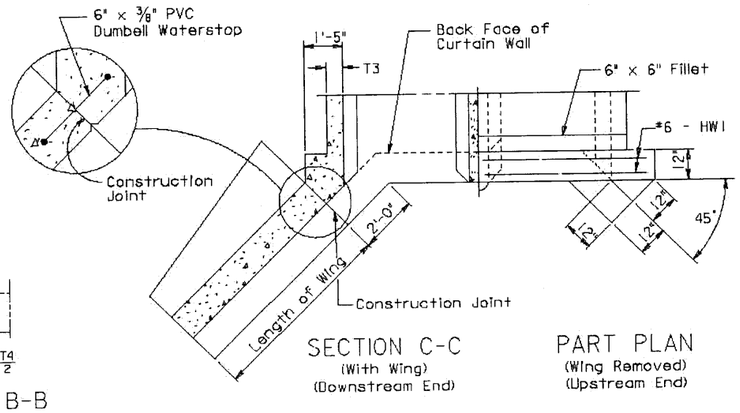

SECTION C-C
(With Wing)
(Downstream End)

PART PLAN
(Wing Removed)
(Upstream End)

REINFORCING BAR DIAGRAMS

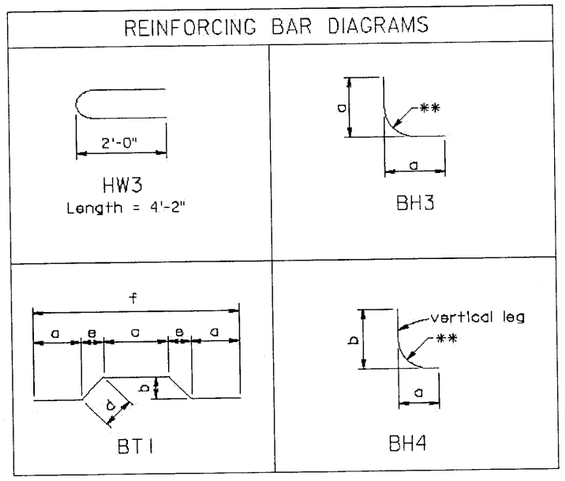

TABLE A	
Bar Size	Pin Dia.
#3	2 1/4"
#4	3"
#5	3 3/4"
#6	4 1/2"
#7	5 1/4"
#8	6"
#9	9"

Sheet 3 of 3

DOUBLE BOX CULVERTS
STANDARD DETAILS
VIRGINIA DEPARTMENT OF TRANSPORTATION

STRUCTURE AND BRIDGE DIVISION

1003.03

U.S. DEPARTMENT OF TRANSPORTATION
FEDERAL HIGHWAY ADMINISTRATION
EASTERN FEDERAL LANDS HIGHWAY DIVISION
STERLING, VIRGINIA

DETAIL

BOX CULVERT
(DOUBLE BARREL)

DETAIL APPROVED FOR USE --/----

REVISED:

DETAIL
602-B

10/24/2006 9:25:05 AM M:\Projects\vlls\st_crolx\nh66(008)proj_dev\Contract 2\details\boxstd2.dgn

REG	STATE	PROJECT	SHEET NO.	TOTAL SHEETS
SE	VI	NH 66(008)	M35	193

BCD-05

DIMENSIONS						REINFORCING STEEL																										
SPAN	HGHT	T1	T2	T3	T4							BH1			BH2			BH3				BH4					BV1			BV2		
(FT.)	(FT.)	TOP SLAB	BOTTOM SLAB	EXTERIOR WALL (IN.)	INTERIOR WALL (IN.)	A	B	C	D	E	F	SIZE	SPACING C-C	LENGTH	SIZE	SPACING C-C	LENGTH	SIZE	SPACING C-C	a	LENGTH	SIZE	SPACING C-C	a	b	LENGTH	SIZE	SPACING C-C	LENGTH	SIZE	SPACING C-C	LENGTH
3	3	8"	8'	8"	8"	6	6'- 0"	6	6'- 0"	1	1'- 0"	4	12"	7'- 6"	4	12"	7'- 8"	--	---	-----	-----	4	12"	2'- 1¼"	2'- 8"	4'- 6"	4	12"	4'- 0"	4	12"	4'- 0"
3	4	8"	8'	8"	8"	6	6'- 0"	6	6'- 0"	2	2'- 0"	4	12"	7'- 6"	4	12"	7'- 8"	--	---	-----	-----	4	12"	2'- 1¼"	3'- 2"	5'- 0"	4	12"	5'- 0"	4	12"	5'- 0"
4	3	8"	8'	8"	8"	8	8'- 0"	8	8'- 0"	1	1'- 0"	4	12"	9'- 1"	4	12"	9'- 8"	--	---	-----	-----	4	12"	2'- 3⅝"	2'- 8"	4'- 8"	4	12"	4'- 0"	4	12"	4'- 0"
4	4	8"	8'	8"	8"	8	8'- 0"	8	8'- 0"	2	2'- 0"	4	12"	9'- 1"	4	12"	9'- 8"	--	---	-----	-----	4	12"	2'- 3⅝"	3'- 2"	5'- 2"	4	12"	5'- 0"	4	12"	5'- 0"
4	5	8"	8'	8"	8"	8	8'- 0"	8	8'- 0"	3	3'- 0"	4	12"	9'- 1"	4	12"	9'- 8"	--	---	-----	-----	4	12"	2'- 3⅝"	3'- 8"	5'- 8"	4	12"	6'- 0"	4	12"	6'- 0"
4	6	8"	8'	8"	8"	8	8'- 0"	8	8'- 0"	4	4'- 0"	4	12"	9'- 1"	4	12"	9'- 8"	--	---	-----	-----	4	12"	2'- 3⅝"	4'- 2"	6'- 2"	4	12"	7'- 0"	4	12"	7'- 0"
5	3	8"	8'	8"	8"	10	10'- 0"	10	10'- 0"	1	1'- 0"	4	12"	10'- 8"	4	12"	11'- 8"	--	---	-----	-----	4	12"	2'- 6"	2'- 8"	4'-11"	4	12"	4'- 0"	4	12"	4'- 0"
5	4	8"	8'	8"	8"	10	10'- 0"	10	10'- 0"	2	2'- 0"	4	12"	10'- 8"	4	12"	11'- 8"	--	---	-----	-----	4	12"	2'- 6"	3'- 2"	5'- 5"	4	12"	5'- 0"	4	12"	5'- 0"
5	5	8"	8'	8"	8"	10	10'- 0"	10	10'- 0"	3	3'- 0"	4	12"	10'- 8"	4	12"	11'- 8"	--	---	-----	-----	4	12"	2'- 6"	3'- 8"	5'-11"	4	12"	6'- 0"	4	12"	6'- 0"
5	6	8"	8'	8"	8"	10	10'- 0"	10	10'- 0"	4	4'- 0"	4	12"	10'- 8"	4	12"	11'- 8"	--	---	-----	-----	4	12"	2'- 6"	4'- 2"	6'- 5"	4	12"	7'- 0"	4	12"	7'- 0"
5	7	8"	8'	8"	8"	10	10'- 0"	10	10'- 0"	5	5'- 0"	4	12"	10'- 8"	4	12"	11'- 8"	--	---	-----	-----	4	12"	2'- 6"	4'- 8"	6'-11"	4	12"	8'- 0"	4	12"	8'- 0"
6	4	8"	8'	8"	8"	12	12'- 0"	12	12'- 0"	2	2'- 0"	4	12"	12'- 3"	4	12"	13'- 8"	4	12"	2'- 8⅜"	5'- 2"	4	12"	2'- 8⅜"	3'- 2"	5'- 7"	4	12"	5'- 0"	4	12"	5'- 0"
6	5	8"	8'	8"	8"	12	12'- 0"	12	12'- 0"	3	3'- 0"	4	12"	12'- 3"	4	12"	13'- 8"	4	12"	2'- 8⅜"	5'- 2"	4	12"	2'- 8⅜"	3'- 8"	6'- 1"	4	12"	6'- 0"	4	12"	6'- 0"
6	6	8"	8'	8"	8"	12	12'- 0"	12	12'- 0"	4	4'- 0"	4	12"	12'- 3"	4	12"	13'- 8"	4	12"	2'- 8⅜"	5'- 2"	4	12"	2'- 8⅜"	4'- 2"	6'- 7"	4	12"	7'- 0"	4	12"	7'- 0"
6	7	8"	8'	8"	8"	12	12'- 0"	12	12'- 0"	5	5'- 0"	4	12"	12'- 3"	4	12"	13'- 8"	4	12"	2'- 8⅜"	5'- 2"	4	12"	2'- 8⅜"	4'- 8"	7'- 1"	4	12"	8'- 0"	4	12"	8'- 0"
6	8	8"	8'	8"	8"	12	12'- 0"	12	12'- 0"	6	6'- 0"	4	12"	12'- 3"	4	12"	13'- 8"	4	12"	2'- 8⅜"	5'- 2"	4	12"	2'- 8⅜"	5'- 2"	7'- 7"	4	12"	9'- 0"	4	12"	9'- 0"
7	4	8"	8'	8"	8"	14	14'- 0"	14	14'- 0"	2	2'- 0"	4	11"	13'-10"	4	11"	15'- 8"	--	---	-----	-----	5	11"	2'-10¾"	3'- 2"	5'- 9"	4	12"	5'- 0"	4	11½"	5'- 0"
7	6	8"	8'	8"	8"	14	14'- 0"	14	14'- 0"	4	4'- 0"	4	11"	13'-10"	4	11"	15'- 8"	--	---	-----	-----	5	11"	2'-10¾"	4'- 2"	6'- 9"	4	12"	7'- 0"	4	12"	7'- 0"
7	8	8"	8'	8"	8"	14	14'- 0"	14	14'- 0"	6	6'- 0"	4	10"	13'-10"	4	10"	15'- 8"	4	10"	2'-10¾"	5'- 6"	4	10"	2'-10¾"	5'- 2"	7'-10"	4	12"	9'- 0"	4	12"	9'- 0"
7	10	8"	8'	8"	8"	14	14'- 0"	14	14'- 0"	8	8'- 0"	4	9"	13'-10"	4	9"	15'- 8"	4	9"	2'-10¾"	5'- 6"	4	9"	2'-10¾"	6'- 2"	8'-10"	4	12"	11'- 0"	4	12"	11'- 0"
8	4	8"	8'	8"	8"	16	16'- 0"	16	16'- 0"	2	2'- 0"	4	8"	15'- 6"	4	8"	17'- 8"	4	8"	3'- 1¼"	5'-11"	4	8"	3'- 1¼"	3'- 2"	6'- 0"	4	12"	5'- 0"	4	10"	5'- 0"
8	6	8"	8'	8"	8"	16	16'- 0"	16	16'- 0"	4	4'- 0"	5	11"	15'- 6"	5	11"	17'- 8"	4	11"	3'- 1¼"	5'-11"	5	11"	3'- 1¼"	4'- 2"	6'-11"	4	12"	7'- 0"	4	10"	7'- 0"
8	8	8"	8'	8"	8"	16	16'- 0"	16	16'- 0"	6	6'- 0"	5	11"	15'- 6"	5	11"	17'- 8"	4	11"	3'- 1¼"	5'-11"	5	11"	3'- 1¼"	5'- 2"	7'-11"	4	12"	9'- 0"	4	10"	9'- 0"
8	10	8"	8'	8"	8"	16	16'- 0"	16	16'- 0"	8	8'- 0"	5	10"	15'- 6"	5	10"	17'- 8"	4	10"	3'- 1¼"	5'-11"	5	10"	3'- 1¼"	6'- 2"	8'-11"	4	12"	11'- 0"	4	10½"	11'- 0"
9	4	8"	8'	8"	8"	18	18'- 0"	18	18'- 0"	2	2'- 0"	5	9"	17'- 1"	4	9"	19'- 8"	4	9"	3'- 3⅝"	6'- 4"	5	9"	3'- 3⅝"	3'- 2"	6'- 2"	4	12"	5'- 0"	4	9"	5'- 0"
9	6	8¼"	8¼"	8"	8"	18	18'- 0"	18	18'- 0"	4	4'- 0"	5	10"	17'- 1"	5	10"	19'- 8"	4	10"	3'- 3⅝"	6'- 4"	5	10"	3'- 3⅝"	4'- 2¼"	7'- 2"	4	12"	7'- 0"	4	10"	7'- 0"
9	8	8½"	8½"	8"	8"	18	18'- 0"	18	18'- 0"	6	6'- 0"	5	9"	17'- 1"	5	9"	19'- 8"	4	9"	3'- 3⅝"	6'- 4"	5	9"	3'- 3⅝"	5'- 2½"	8'- 2"	4	12"	9'- 1"	4	10"	9'- 1"
9	10	9"	9'	8"	8"	18	18'- 0"	18	18'- 0"	8	8'- 0"	6	12"	17'- 1"	5	12"	19'- 8"	4	12"	3'- 3⅝"	6'- 4"	6	12"	3'- 3⅝"	6'- 3"	9'- 2"	4	12"	11'- 2"	4	10"	11'- 2"
9	12	9"	9'	8"	8"	18	18'- 0"	18	18'- 0"	10	10'- 0"	6	8"	17'- 1"	5	8"	19'- 8"	4	8"	3'- 3⅝"	6'- 4"	5	8"	3'- 3⅝"	7'- 3"	10'- 3"	4	11½"	13'- 2"	4	11"	13'- 2"
10	4	8½"	8½"	8"	8"	20	20'- 0"	20	20'- 0"	2	2'- 0"	5	9"	18'- 8"	5	9"	21'- 8"	--	---	-----	-----	6	9"	3'- 6"	3'- 2½"	6'- 4"	4	12"	5'- 1"	4	8"	5'- 1"
10	6	8¾"	8¾"	8"	8"	20	20'- 0"	20	20'- 0"	4	4'- 0"	5	9"	18'- 8"	5	9"	21'- 8"	4	9"	3'- 6'	6'- 9"	5	9"	3'- 6"	4'- 2¾"	7'- 5"	4	12"	7'- 2"	4	9"	7'- 2"
10	8	9"	9'	8"	8"	20	20'- 0"	20	20'- 0"	6	6'- 0"	6	12"	18'- 8"	6	12"	21'- 8"	4	12"	3'- 6'	6'- 9"	6	12"	3'- 6"	5'- 3"	8'- 4"	4	12"	9'- 2"	4	10"	9'- 2"
10	10	9¼"	9¼"	8"	8"	20	20'- 0"	20	20'- 0"	8	8'- 0"	5	8"	18'- 8"	5	8"	21'- 8"	4	8"	3'- 6'	6'- 9"	5	8"	3'- 6"	6'- 3¼"	9'- 5"	4	12"	11'- 2"	4	10"	11'- 2"
10	12	9¾"	9¾"	8"	8"	20	20'- 0"	20	20'- 0"	10	10'- 0"	6	10"	18'- 8"	5	10"	21'- 8"	4	10"	3'- 6'	6'- 9"	5	10"	3'- 6"	7'- 3¾"	10'- 6"	4	12"	13'- 3"	4	10"	13'- 3"
12	6	9¾"	9¾"	8"	8"	24	24'- 0"	24	24'- 0"	4	4'- 0"	5	8"	21'-10"	5	8"	25'- 8"	4	8"	3'-10¾"	7'- 6"	5	8"	3'-10¾"	4'- 3¾"	7'-11"	4	12"	7'- 3"	4	7½"	7'- 3"
12	8	9¾"	9¾"	8"	8"	24	24'- 0"	24	24'- 0"	6	6'- 0"	6	11"	21'-10"	6	11"	25'- 8"	4	11"	3'-10¾"	7'- 6"	6	11"	3'-10¾"	5'- 3¾"	8'-10"	4	12"	9'- 3"	4	8"	9'- 3"
12	10	10¼"	10¼"	8"	8"	24	24'- 0"	24	24'- 0"	8	8'- 0"	6	9"	21'-10"	6	9"	25'- 8"	4	9"	3'-10¾"	7'- 6"	6	9"	3'-10¾"	6'- 4¼"	9'-10"	4	12"	11'- 5"	4	10"	11'- 5"
12	12	10¼"	10¼"	8"	8"	24	24'- 0"	24	24'- 0"	10	10'- 0"	7	12"	21'-10"	7	12"	25'- 8"	5	12"	3'-10¾"	7'- 6"	7	12"	3'-10¾"	7'- 4¼"	10'- 9"	4	12"	13'- 5"	4	10"	13'- 5"

Sheet 1 of 2 For Typical Section, notes and other details, refer to standard BCD-DT.

DOUBLE BOX CULVERTS

2 TO 5 FT. FILLS

VIRGINIA DEPARTMENT OF TRANSPORTATION

STRUCTURE AND BRIDGE DIVISION

1003.06

U.S. DEPARTMENT OF TRANSPORTATION
FEDERAL HIGHWAY ADMINISTRATION
EASTERN FEDERAL LANDS HIGHWAY DIVISION
STERLING, VIRGINIA

DETAIL

BOX CULVERT
(DOUBLE BARREL)

DETAIL APPROVED FOR USE --/----

REVISED:

DETAIL
602-B

10/24/2006 9:25:36 AM M:\Projects\VIIS\st_prot\nh66(008)\proj_dev\Contract 2\details\boxstd2.dgn

REG	STATE	PROJECT	SHEET NO.	TOTAL SHEETS
SE	VI	NH 66(008)	M36	193

BCD-05

SPAN (FT.)	HGHT (FT.)	REINFORCING STEEL BT1 SIZE	SPACING C-C	a	b	c	d	e	f	g	LENGTH	NO. BL1 BARS	NO. BL2 BARS	REINFORCING STEEL (LBS/LONG. JT)	QUAN./LF CONCRETE CLASS A4 (CY/LF)	REINFORCING STEEL (LBS/LF)	HEADWALLS G HEADWALL LENGTH	HW1 SIZE	HW1 LENGTH	NO. HW2 BARS	NO. HW3 BARS	INLET CONCRETE CL. A4 (CY)	INLET REINFORCING STEEL (LBS)	OUTLET CONCRETE CL. A4 (CY)	OUTLET REINFORCING STEEL (LBS)	WINGWALL
3	3	4	12"	2'- 8 7/8"	0'- 4 1/2"	1'- 6 5/8"	0'- 5 7/8"	0'- 3 3/4"	7'- 7 7/8"	-----	7'-11"	32	12	30.956	0.695	79.439	9'- 6"	6	9'- 2"	1	4	1.433	67.988	1.425	55.073	A
3	4	4	12"	2'- 8 7/8"	0'- 4 1/2"	1'- 6 5/8"	0'- 5 7/8"	0'- 3 3/4"	7'- 7 7/8"	-----	7'-11"	32	18	33.074	0.768	85.703	9'- 6"	6	9'- 2"	1	5	1.531	71.439	1.517	55.073	C
4	3	4	12"	3'- 6 1/2"	0'- 4 1/2"	1'-11 1/2"	0'- 5 7/8"	0'- 3 3/4"	9'- 8"	-----	9'-11"	40	12	37.636	0.792	92.688	11'- 6"	6	11'- 2"	1	4	1.635	80.004	1.634	67.089	A
4	4	4	12"	3'- 6 1/2"	0'- 4 1/2"	1'-11 1/2"	0'- 5 7/8"	0'- 3 3/4"	9'- 8"	-----	9'-11"	40	18	39.754	0.866	98.952	11'- 6"	6	11'- 2"	1	5	1.734	83.455	1.726	67.089	C
4	5	4	12"	3'- 6 1/2"	0'- 4 1/2"	1'-11 1/2"	0'- 5 7/8"	0'- 3 3/4"	9'- 8"	-----	9'-11"	40	24	41.872	0.940	105.216	11'- 6"	6	11'- 2"	1	6	1.833	86.907	1.819	67.089	E
4	6	4	12"	3'- 6 1/2"	0'- 4 1/2"	1'-11 1/2"	0'- 5 7/8"	0'- 3 3/4"	9'- 8"	-----	9'-11"	40	30	43.990	1.013	111.480	11'- 6"	6	11'- 2"	1	7	1.932	90.358	1.912	67.089	G
5	3	4	12"	4'- 4 1/8"	0'- 4 1/2"	2'- 4 1/4"	0'- 5 7/8"	0'- 3 3/4"	11'- 8"	-----	11'-11"	48	12	44.316	0.890	106.159	13'- 6"	6	13'- 2"	1	4	1.837	92.020	1.843	79.105	A
5	4	4	12"	4'- 4 1/8"	0'- 4 1/2"	2'- 4 1/4"	0'- 5 7/8"	0'- 3 3/4"	11'- 8"	-----	11'-11"	48	18	46.434	0.964	112.423	13'- 6"	6	13'- 2"	1	5	1.936	95.471	1.935	79.105	C
5	5	4	12"	4'- 4 1/8"	0'- 4 1/2"	2'- 4 1/4"	0'- 5 7/8"	0'- 3 3/4"	11'- 8"	-----	11'-11"	48	24	48.552	1.037	118.687	13'- 6"	6	13'- 2"	1	6	2.035	98.923	2.028	79.105	E
5	6	4	12"	4'- 4 1/8"	0'- 4 1/2"	2'- 4 1/4"	0'- 5 7/8"	0'- 3 3/4"	11'- 8"	-----	11'-11"	48	30	50.670	1.111	124.951	13'- 6"	6	13'- 2"	1	7	2.134	102.374	2.121	79.105	G
5	7	4	12"	4'- 4 1/8"	0'- 4 1/2"	2'- 4 1/4"	0'- 5 7/8"	0'- 3 3/4"	11'- 8"	-----	11'-11"	48	36	52.788	1.185	131.215	13'- 6"	6	13'- 2"	1	8	2.233	105.825	2.214	79.105	I
6	4	4	12"	5'- 1 3/4"	0'- 4 1/2"	2'- 9"	0'- 5 7/8"	0'- 3 3/4"	13'- 8"	-----	13'-11"	56	18	53.114	1.060	139.477	15'- 6"	6	15'- 2"	1	5	2.138	107.487	2.144	91.121	C
6	5	4	12"	5'- 1 3/4"	0'- 4 1/2"	2'- 9"	0'- 5 7/8"	0'- 3 3/4"	13'- 8"	-----	13'-11"	56	24	55.232	1.134	145.741	15'- 6"	6	15'- 2"	1	6	2.237	110.939	2.237	91.121	E
6	6	4	12"	5'- 1 3/4"	0'- 4 1/2"	2'- 9"	0'- 5 7/8"	0'- 3 3/4"	13'- 8"	-----	13'-11"	56	30	57.350	1.208	152.005	15'- 6"	6	15'- 2"	1	7	2.336	114.390	2.330	91.121	G
6	7	4	12"	5'- 1 3/4"	0'- 4 1/2"	2'- 9"	0'- 5 7/8"	0'- 3 3/4"	13'- 8"	-----	13'-11"	56	36	59.468	1.281	158.269	15'- 6"	6	15'- 2"	1	8	2.435	117.841	2.423	91.121	I
6	8	4	12"	5'- 1 3/4"	0'- 4 1/2"	2'- 9"	0'- 5 7/8"	0'- 3 3/4"	13'- 8"	-----	13'-11"	56	42	61.586	1.355	164.533	15'- 6"	6	15'- 2"	1	9	2.534	121.293	2.515	91.121	K
7	4	4	11"	5'-11 3/8"	0'- 4 1/2"	3'- 1 7/8"	0'- 5 7/8"	0'- 3 3/4"	15'- 8 1/8"	-----	15'-11"	64	18	59.794	1.158	155.533	17'- 6"	6	17'- 2"	1	5	2.341	119.503	2.353	103.137	C
7	6	4	11"	5'-11 3/8"	0'- 4 1/2"	3'- 1 7/8"	0'- 5 7/8"	0'- 3 3/4"	15'- 8 1/8"	-----	15'-11"	64	30	64.030	1.305	169.650	17'- 6"	6	17'- 2"	1	7	2.539	126.406	2.539	103.137	G
7	8	4	10"	5'-11 3/8"	0'- 4 1/2"	3'- 1 7/8"	0'- 5 7/8"	0'- 3 3/4"	15'- 8 1/8"	-----	15'-11"	64	42	68.266	1.451	198.156	17'- 6"	6	17'- 2"	1	9	2.736	133.309	2.724	103.137	K
7	10	4	9"	5'-11 3/8"	0'- 4 1/2"	3'- 1 7/8"	0'- 5 7/8"	0'- 3 3/4"	15'- 8 1/8"	-----	15'-11"	64	54	72.502	1.597	224.415	17'- 6"	6	17'- 2"	1	11	2.934	140.211	2.910	103.137	O
8	4	4	8"	6'- 8 7/8"	0'- 4 1/2"	3'- 6 5/8"	0'- 5 7/8"	0'- 3 3/4"	17'- 7 7/8"	-----	17'-11"	72	18	66.474	1.252	219.693	19'- 6"	6	19'- 2"	1	5	2.543	131.519	2.562	115.153	C
8	6	5	11"	6'- 8 7/8"	0'- 4 5/8"	3'- 6 5/8"	0'- 6"	0'- 3 3/4"	17'- 7 7/8"	-----	17'-11"	72	30	70.710	1.398	244.924	19'- 6"	6	19'- 2"	1	7	2.741	138.422	2.748	115.153	G
8	8	5	11"	6'- 8 7/8"	0'- 4 5/8"	3'- 6 5/8"	0'- 6"	0'- 3 3/4"	17'- 7 7/8"	-----	17'-11"	72	42	74.946	1.545	259.865	19'- 6"	6	19'- 2"	1	9	2.939	145.325	2.933	115.153	K
8	10	5	10"	6'- 8 7/8"	0'- 4 5/8"	3'- 6 5/8"	0'- 6"	0'- 3 3/4"	17'- 7 7/8"	-----	17'-11"	72	54	79.182	1.691	291.375	19'- 6"	6	19'- 2"	1	11	3.137	152.227	3.119	115.153	O
9	4	5	9"	7'- 6 1/2"	0'- 4 5/8"	3'-11 1/2"	0'- 6"	0'- 3 3/4"	19'- 8"	-----	19'-11"	80	18	73.154	1.347	270.604	21'- 6"	6	21'- 2"	1	5	2.745	143.535	2.771	127.169	C
9	6	5	10"	7'- 6 3/8"	0'- 4 7/8"	3'-11 1/4"	0'- 6 1/4"	0'- 4"	19'- 8"	-----	19'-11"	80	30	77.390	1.525	283.329	21'- 6"	6	21'- 2"	1	7	2.933	150.438	2.946	127.169	G
9	8	5	9"	7'- 6 1/4"	0'- 5 1/8"	3'-11"	0'- 6 5/8"	0'- 4 1/4"	19'- 8"	-----	19'-11"	80	42	81.626	1.701	321.531	21'- 6"	6	21'- 2"	1	9	3.120	157.341	3.121	127.169	K
9	10	6	12"	7'- 6"	0'- 5 3/4"	3'-10 1/2"	0'- 7 1/2"	0'- 4 3/4"	19'- 8"	-----	20'- 0"	80	54	85.862	1.910	330.984	21'- 6"	6	21'- 2"	1	11	3.297	164.243	3.285	127.169	O
9	12	4	8"	7'- 6"	0'- 5 1/2"	3'-10 1/2"	0'- 7 1/4"	0'- 4 3/4"	19'- 8"	-----	20'- 0"	80	66	90.098	2.054	383.924	21'- 6"	6	21'- 2"	1	13	3.495	171.146	3.471	127.169	S
10	4	5	9"	8'- 3 7/8"	0'- 5 1/8"	4'- 3 3/4"	0'- 6 5/8"	0'- 4 1/4"	21'- 8"	-----	21'-11"	88	18	79.834	1.511	306.403	23'- 6"	6	23'- 2"	1	5	2.924	155.551	2.956	139.185	C
10	6	5	9"	8'- 3 3/4"	0'- 5 3/8"	4'- 3 1/2"	0'- 7"	0'- 4 1/2"	21'- 8"	-----	22'- 0"	88	30	84.070	1.691	331.079	23'- 6"	6	23'- 2"	1	7	3.109	162.454	3.129	139.185	G
10	8	6	12"	8'- 3 5/8"	0'- 5 3/4"	4'- 3 1/4"	0'- 7 1/2"	0'- 4 3/4"	21'- 8"	-----	22'- 0"	88	42	88.306	1.871	356.871	23'- 6"	6	23'- 2"	1	9	3.295	169.357	3.303	139.185	K
10	10	5	8"	8'- 3 1/2"	0'- 5 7/8"	4'- 3"	0'- 7 3/4"	0'- 5"	21'- 8"	-----	22'- 0"	88	54	92.542	2.051	392.934	23'- 6"	6	23'- 2"	1	11	3.499	176.259	3.495	139.185	P
10	12	6	10"	8'- 3 1/4"	0'- 6 1/2"	4'- 2 1/2"	0'- 8 1/2"	0'- 5 1/2"	21'- 8"	-----	22'- 0"	88	66	96.778	2.266	397.586	23'- 6"	6	23'- 2"	1	13	3.673	183.162	3.656	139.185	T
12	6	5	8"	9'-10 1/2"	0'- 6 3/8"	5'- 1/8"	0'- 8 3/8"	0'- 5 1/2"	25'- 8 1/8"	-----	26'- 0"	104	30	97.430	2.061	415.520	27'- 6"	6	27'- 2"	1	7	3.463	186.486	3.496	163.217	H
12	8	6	11"	9'-10 1/2"	0'- 6 1/2"	5'- 1/8"	0'- 8 1/2"	0'- 5 1/2"	25'- 8 1/8"	-----	26'- 0"	104	42	101.666	2.208	436.782	27'- 6"	6	27'- 2"	1	9	3.660	193.389	3.681	163.217	L
12	10	6	9"	9'-10 1/4"	0'- 7"	4'-11 5/8"	0'- 9 1/4"	0'- 6"	25'- 8 1/8"	-----	26'- 1"	104	54	105.902	2.429	523.549	27'- 6"	6	27'- 2"	1	11	3.828	200.291	3.837	163.217	P
12	12	7	12"	9'-10 1/4"	0'- 7 1/8"	4'-11 3/4"	0'- 9 1/4"	0'- 5 7/8"	25'- 8"	-----	26'- 1"	104	66	110.138	2.575	553.713	27'- 6"	6	27'- 2"	1	13	4.026	207.194	4.022	163.217	T

Sheet 2 of 2

STRUCTURE AND BRIDGE DIVISION

DOUBLE BOX CULVERTS

2 TO 5 FT. FILLS

VIRGINIA DEPARTMENT OF TRANSPORTATION

1003.07

U.S. DEPARTMENT OF TRANSPORTATION
FEDERAL HIGHWAY ADMINISTRATION
EASTERN FEDERAL LANDS HIGHWAY DIVISION
STERLING, VIRGINIA

DETAIL

BOX CULVERT
(DOUBLE BARREL)

DETAIL APPROVED FOR USE --/----

REVISED:

DETAIL
602-B

10/24/2006 9:26:20 AM M:\Projects\vlis\st_crol\nh66(008)proj_dev\Contract 2\details\boxstd2.dgn

REG	STATE	PROJECT	SHEET NO.	TOTAL SHEETS
SE	VI	NH 66(008)	M37	193

BCD-10

DIMENSIONS						REINFORCING STEEL																													
SPAN	HGHT	T1	T2	T3	T4							BH1			BH2			BH3				BH4					BV1			BV2		
(FT.)	(FT.)	TOP SLAB	BOTTOM SLAB	EXTERIOR WALL (IN.)	INTERIOR WALL (IN.)	A	B	C	D	E	F	SIZE	SPACING C-C	LENGTH	SIZE	SPACING C-C	LENGTH	SIZE	SPACING C-C	a	LENGTH	SIZE	SPACING C-C	a	b	LENGTH	SIZE	SPACING C-C	LENGTH	SIZE	SPACING C-C	LENGTH
3	3	8"	8'	8"	8"	6	6'- 0"	6	6'- 0"	1	1'- 0"	4	12"	7'- 6"	4	12"	7'- 8"	--	---	-----	-----	4	12"	2'- 1 1/4"	2'- 8"	4'- 6"	4	12"	4'- 0"	4	12"	4'- 0"
3	4	8"	8'	8"	8"	6	6'- 0"	6	6'- 0"	2	2'- 0"	4	12"	7'- 6"	4	12"	7'- 8"	--	---	-----	-----	4	12"	2'- 1 1/4"	3'- 2"	5'- 0"	4	12"	5'- 0"	4	12"	5'- 0"
4	3	8"	8'	8"	8"	8	8'- 0"	8	8'- 0"	1	1'- 0"	4	12"	9'- 1"	4	12"	9'- 8"	--	---	-----	-----	4	12"	2'- 3 5/8"	2'- 8"	4'- 8"	4	12"	4'- 0"	4	12"	4'- 0"
4	4	8"	8'	8"	8"	8	8'- 0"	8	8'- 0"	2	2'- 0"	4	12"	9'- 1"	4	12"	9'- 8"	--	---	-----	-----	4	12"	2'- 3 5/8"	3'- 2"	5'- 2"	4	12"	5'- 0"	4	12"	5'- 0"
4	5	8"	8'	8"	8"	8	8'- 0"	8	8'- 0"	3	3'- 0"	4	12"	9'- 1"	4	12"	9'- 8"	--	---	-----	-----	4	12"	2'- 3 5/8"	3'- 8"	5'- 8"	4	12"	6'- 0"	4	12"	6'- 0"
4	6	8"	8'	8"	8"	8	8'- 0"	8	8'- 0"	4	4'- 0"	4	12"	9'- 1"	4	12"	9'- 8"	--	---	-----	-----	4	12"	2'- 3 5/8"	4'- 2"	6'- 2"	4	12"	7'- 0"	4	12"	7'- 0"
5	3	8"	8'	8"	8"	10	10'- 0"	10	10'- 0"	1	1'- 0"	4	12"	10'- 8"	4	12"	11'- 8"	--	---	-----	-----	4	12"	2'- 6"	2'- 8"	4'-11"	4	12"	4'- 0"	4	12"	4'- 0"
5	4	8"	8'	8"	8"	10	10'- 0"	10	10'- 0"	2	2'- 0"	4	12"	10'- 8"	4	12"	11'- 8"	--	---	-----	-----	4	12"	2'- 6"	3'- 2"	5'- 5"	4	12"	5'- 0"	4	12"	5'- 0"
5	5	8"	8'	8"	8"	10	10'- 0"	10	10'- 0"	3	3'- 0"	4	12"	10'- 8"	4	12"	11'- 8"	--	---	-----	-----	4	12"	2'- 6"	3'- 8"	5'-11"	4	12"	6'- 0"	4	12"	6'- 0"
5	6	8"	8'	8"	8"	10	10'- 0"	10	10'- 0"	4	4'- 0"	4	12"	10'- 8"	4	12"	11'- 8"	--	---	-----	-----	4	12"	2'- 6"	4'- 2"	6'- 5"	4	12"	7'- 0"	4	12"	7'- 0"
5	7	8"	8'	8"	8"	10	10'- 0"	10	10'- 0"	5	5'- 0"	4	12"	10'- 8"	4	12"	11'- 8"	--	---	-----	-----	4	12"	2'- 6"	4'- 8"	6'-11"	4	12"	8'- 0"	4	12"	8'- 0"
6	4	8"	8'	8"	8"	12	12'- 0"	12	12'- 0"	2	2'- 0"	4	12"	12'- 3"	4	12"	13'- 8"	--	---	-----	-----	4	12"	2'- 8 3/8"	3'- 2"	5'- 7"	4	12"	5'- 0"	4	12"	5'- 0"
6	5	8"	8'	8"	8"	12	12'- 0"	12	12'- 0"	3	3'- 0"	4	12"	12'- 3"	4	12"	13'- 8"	--	---	-----	-----	4	12"	2'- 8 3/8"	3'- 8"	6'- 1"	4	12"	6'- 0"	4	12"	6'- 0"
6	6	8"	8'	8"	8"	12	12'- 0"	12	12'- 0"	4	4'- 0"	4	12"	12'- 3"	4	12"	13'- 8"	--	---	-----	-----	4	12"	2'- 8 3/8"	4'- 2"	6'- 7"	4	12"	7'- 0"	4	12"	7'- 0"
6	7	8"	8'	8"	8"	12	12'- 0"	12	12'- 0"	5	5'- 0"	4	12"	12'- 3"	4	12"	13'- 8"	--	---	-----	-----	4	12"	2'- 8 3/8"	4'- 8"	7'- 1"	4	12"	8'- 0"	4	12"	8'- 0"
6	8	8"	8'	8"	8"	12	12'- 0"	12	12'- 0"	6	6'- 0"	4	12"	12'- 3"	4	12"	13'- 8"	3	12"	2'- 8 3/8"	5'- 2"	4	12"	2'- 8 3/8"	5'- 2"	7'- 7"	4	12"	9'- 0"	4	12"	9'- 0"
7	4	8"	8'	8"	8"	14	14'- 0"	14	14'- 0"	2	2'- 0"	4	12"	13'-10"	4	12"	15'- 8"	--	---	-----	-----	5	12"	2'-10 3/4"	3'- 2"	5'- 9"	4	12"	5'- 0"	4	12"	5'- 0"
7	6	8"	8'	8"	8"	14	14'- 0"	14	14'- 0"	4	4'- 0"	4	12"	13'-10"	4	12"	15'- 8"	4	12"	2'-10 3/4"	5'- 6"	4	12"	2'-10 3/4"	4'- 2"	6'-10"	4	12"	7'- 0"	4	12"	7'- 0"
7	8	8"	8'	8"	8"	14	14'- 0"	14	14'- 0"	6	6'- 0"	4	12"	13'-10"	4	12"	15'- 8"	4	12"	2'-10 3/4"	5'- 6"	4	12"	2'-10 3/4"	5'- 2"	7'-10"	4	12"	9'- 0"	4	12"	9'- 0"
7	10	8"	8'	8"	8"	14	14'- 0"	14	14'- 0"	8	8'- 0"	4	11"	13'-10"	4	11"	15'- 8"	--	---	-----	-----	5	11"	2'-10 3/4"	6'- 2"	8'- 9"	4	12"	11'- 0"	4	12"	11'- 0"
8	4	8 1/4"	8 1/4"	8"	8"	16	16'- 0"	16	16'- 0"	2	2'- 0"	4	10"	15'- 6"	4	10"	17'- 8"	--	---	-----	-----	5	10"	3'- 1 1/4"	3'- 2 1/4"	6'- 0"	4	9"	5'- 0"	4	12"	5'- 0"
8	6	8 1/2"	8 1/2"	8"	8"	16	16'- 0"	16	16'- 0"	4	4'- 0"	4	10"	15'- 6"	4	10"	17'- 8"	3	10"	3'- 1 1/4"	6'- 0"	4	10"	3'- 1 1/4"	4'- 2 1/2"	7'- 1"	4	12"	7'- 1"	4	12"	7'- 1"
8	8	8 3/4"	8 3/4"	8"	8"	16	16'- 0"	16	16'- 0"	6	6'- 0"	4	9"	15'- 6"	4	9"	17'- 8"	3	9"	3'- 1 1/4"	6'- 0"	4	9"	3'- 1 1/4"	5'- 2 3/4"	8'- 1"	4	12"	9'- 2"	4	12"	9'- 2"
8	10	9"	9"	8"	8"	16	16'- 0"	16	16'- 0"	8	8'- 0"	5	10"	15'- 6"	4	10"	17'- 8"	--	---	-----	-----	5	10"	3'- 1 1/4"	6'- 3"	9'- 0"	4	12"	11'- 2"	4	12"	11'- 2"
9	4	9 1/4"	9 1/4"	8"	8"	18	18'- 0"	18	18'- 0"	2	2'- 0"	5	9"	17'- 1"	4	9"	19'- 8"	4	9"	3'- 3 5/8"	6'- 4"	4	9"	3'- 3 5/8"	3'- 3 1/4"	6'- 4"	4	8 1/2"	5'- 2"	4	12"	5'- 2"
9	6	9 1/2"	9 1/2"	8"	8"	18	18'- 0"	18	18'- 0"	4	4'- 0"	5	9"	17'- 1"	4	9"	19'- 8"	3	9"	3'- 3 5/8"	6'- 5"	4	9"	3'- 3 5/8"	4'- 3 1/2"	7'- 4"	4	12"	7'- 3"	4	12"	7'- 3"
9	8	9 3/4"	9 3/4"	8"	8"	18	18'- 0"	18	18'- 0"	6	6'- 0"	5	9"	17'- 1"	4	9"	19'- 8"	3	9"	3'- 3 5/8"	6'- 5"	4	9"	3'- 3 5/8"	5'- 3 3/4"	8'- 4"	4	12"	9'- 3"	4	12"	9'- 3"
9	10	9 3/4"	9 3/4"	8"	8"	18	18'- 0"	18	18'- 0"	8	8'- 0"	5	9"	17'- 1"	4	9"	19'- 8"	4	9"	3'- 3 5/8"	6'- 4"	4	9"	3'- 3 5/8"	6'- 3 3/4"	9'- 4"	4	12"	11'- 3"	4	12"	11'- 3"
9	12	10"	10"	8"	8"	18	18'- 0"	18	18'- 0"	10	10'- 0"	5	8"	17'- 1"	4	8"	19'- 8"	4	8"	3'- 3 5/8"	6'- 4"	4	8"	3'- 3 5/8"	7'- 4"	10'- 4"	4	8"	13'- 4"	4	12"	13'- 4"
10	4	10"	10"	8"	8"	20	20'- 0"	20	20'- 0"	2	2'- 0"	5	8"	18'- 8"	4	8"	21'- 8"	4	8"	3'- 6"	6'- 9"	4	8"	3'- 6"	3'- 4"	6'- 7"	4	8"	5'- 4"	4	12"	5'- 4"
10	6	10 1/4"	10 1/4"	8"	8"	20	20'- 0"	20	20'- 0"	4	4'- 0"	5	9"	18'- 8"	5	9"	21'- 8"	--	---	-----	-----	5	9"	3'- 6"	4'- 4 1/4"	7'- 6"	4	12"	7'- 5"	4	12"	7'- 5"
10	8	10 1/2"	10 1/2"	8"	8"	20	20'- 0"	20	20'- 0"	6	6'- 0"	5	9"	18'- 8"	5	9"	21'- 8"	--	---	-----	-----	5	9"	3'- 6"	5'- 4 1/2"	8'- 7"	4	12"	9'- 5"	4	12"	9'- 5"
10	10	10 3/4"	10 3/4"	8"	8"	20	20'- 0"	20	20'- 0"	8	8'- 0"	5	10"	18'- 8"	5	10"	21'- 8"	3	10"	3'- 6"	6'-10"	5	10"	3'- 6"	6'- 4 3/4"	9'- 7"	4	12"	11'- 5"	4	12"	11'- 5"
10	12	10 3/4"	10 3/4"	8"	8"	20	20'- 0"	20	20'- 0"	10	10'- 0"	5	10"	18'- 8"	5	10"	21'- 8"	4	10"	3'- 6"	6'- 9"	5	10"	3'- 6"	7'- 4 3/4"	10'- 7"	4	8 1/2"	13'- 5"	4	12"	13'- 5"
12	6	12"	12"	8"	8"	24	24'- 0"	24	24'- 0"	4	4'- 0"	6	9"	21'-10"	5	9"	25'- 8"	4	9"	3'-10 3/4"	7'- 6"	4	9"	3'-10 3/4"	4'- 6"	8'- 2"	4	11"	7'- 8"	4	12"	7'- 8"
12	8	12 1/4"	12 1/4"	8"	8"	24	24'- 0"	24	24'- 0"	6	6'- 0"	6	9"	21'-10"	5	9"	25'- 8"	4	9"	3'-10 3/4"	7'- 6"	4	9"	3'-10 3/4"	5'- 6 1/4"	9'- 2"	4	12"	9'- 9"	4	12"	9'- 9"
12	10	12 1/2"	12 1/2"	8"	8"	24	24'- 0"	24	24'- 0"	8	8'- 0"	6	9"	21'-10"	5	9"	25'- 8"	--	---	-----	-----	5	9"	3'-10 3/4"	6'- 6 1/2"	10'- 1"	4	12"	11'- 9"	4	12"	11'- 9"
12	12	12 1/2"	12 1/2"	8"	8"	24	24'- 0"	24	24'- 0"	10	10'- 0"	6	9"	21'-10"	6	9"	25'- 8"	--	---	-----	-----	6	9"	3'-10 3/4"	7'- 6 1/2"	11'- 0"	4	10"	13'- 9"	4	12"	13'- 9"

Sheet 1 of 2

For Typical Section, notes and other details, refer to standard BCD-DT.

DOUBLE BOX CULVERTS

5 TO 10 FT. FILLS

VIRGINIA DEPARTMENT OF TRANSPORTATION

STRUCTURE AND BRIDGE DIVISION

1003.08

U.S. DEPARTMENT OF TRANSPORTATION
FEDERAL HIGHWAY ADMINISTRATION
EASTERN FEDERAL LANDS HIGHWAY DIVISION
STERLING, VIRGINIA

DETAIL

BOX CULVERT
(DOUBLE BARREL)

DETAIL APPROVED FOR USE --/----

REVISED:

DETAIL
602-B

10/24/2006 9:27:16 AM M:\Projects\vlls\st_crol\vnh66\008\proj_dev\Contract 2\details\boxstd2.dgn

REG	STATE	PROJECT	SHEET NO.	TOTAL SHEETS
SE	VI	NH 66(008)	M38	193

BCD-10

SPAN	HGHT	REINFORCING STEEL													QUAN./LF		HEADWALLS										
		BT1															G	HW1									
(FT.)	(FT.)	SIZE	SPACING C-C	a	b	c	d	e	f	g	LENGTH	NO. BL1 BARS	NO. BL2 BARS	REINFORCING STEEL (LBS/LONG. JT)	CONCRETE CLASS A4 (CY/LF)	REINFORCING STEEL (LBS/LF)	HEADWALL LENGTH	SIZE	LENGTH	NO. HW2 BARS	NO. HW3 BARS	INLET CONCRETE CL. A4 (CY)	INLET REINFORCING STEEL (LBS)	OUTLET CONCRETE CL. A4 (CY)	OUTLET REINFORCING STEEL (LBS)	WINGWALL
3	3	4	12"	2'- 8 7/8"	0'- 4 1/2"	1'- 6 5/8"	0'- 5 7/8"	0'- 3 3/4"	7'- 7 7/8"	-----	7'-11"	32	12	30.956	0.695	79.439	9'- 6"	6	9'- 2"	1	4	1.433	67.988	1.425	55.073	A
3	4	4	12"	2'- 8 7/8"	0'- 4 1/2"	1'- 6 5/8"	0'- 5 7/8"	0'- 3 3/4"	7'- 7 7/8"	-----	7'-11"	32	18	33.074	0.768	85.703	9'- 6"	6	9'- 2"	1	5	1.531	71.439	1.517	55.073	C
4	3	4	12"	3'- 6 1/2"	0'- 4 1/2"	1'-11 1/2"	0'- 5 7/8"	0'- 3 3/4"	9'- 8"	-----	9'-11"	40	12	37.636	0.792	92.688	11'- 6"	6	11'- 2"	1	4	1.635	80.004	1.634	67.089	A
4	4	4	12"	3'- 6 1/2"	0'- 4 1/2"	1'-11 1/2"	0'- 5 7/8"	0'- 3 3/4"	9'- 8"	-----	9'-11"	40	18	39.754	0.866	98.952	11'- 6"	6	11'- 2"	1	5	1.734	83.455	1.726	67.089	C
4	5	4	12"	3'- 6 1/2"	0'- 4 1/2"	1'-11 1/2"	0'- 5 7/8"	0'- 3 3/4"	9'- 8"	-----	9'-11"	40	24	41.872	0.940	105.216	11'- 6"	6	11'- 2"	1	6	1.833	86.907	1.819	67.089	E
4	6	4	12"	3'- 6 1/2"	0'- 4 1/2"	1'-11 1/2"	0'- 5 7/8"	0'- 3 3/4"	9'- 8"	-----	9'-11"	40	30	43.990	1.013	111.480	11'- 6"	6	11'- 2"	1	7	1.932	90.358	1.912	67.089	G
5	3	3	12"	4'- 4"	0'- 4 3/8"	2'- 4 1/8"	0'- 5 7/8"	0'- 3 7/8"	11'- 7 7/8"	-----	11'-11"	48	12	44.316	0.891	99.200	13'- 6"	6	13'- 2"	1	4	1.837	92.020	1.843	79.105	A
5	4	3	12"	4'- 4"	0'- 4 3/8"	2'- 4 1/8"	0'- 5 7/8"	0'- 3 7/8"	11'- 7 7/8"	-----	11'-11"	48	18	46.434	0.964	105.464	13'- 6"	6	13'- 2"	1	5	1.936	95.471	1.935	79.105	C
5	5	4	12"	4'- 4 1/8"	0'- 4 1/2"	2'- 4 1/4"	0'- 5 7/8"	0'- 3 3/4"	11'- 8"	-----	11'-11"	48	24	48.552	1.037	118.687	13'- 6"	6	13'- 2"	1	6	2.035	98.923	2.028	79.105	E
5	6	4	12"	4'- 4 1/8"	0'- 4 1/2"	2'- 4 1/4"	0'- 5 7/8"	0'- 3 3/4"	11'- 8"	-----	11'-11"	48	30	50.670	1.111	124.951	13'- 6"	6	13'- 2"	1	7	2.134	102.374	2.121	79.105	G
5	7	4	12"	4'- 4 1/8"	0'- 4 1/2"	2'- 4 1/4"	0'- 5 7/8"	0'- 3 3/4"	11'- 8"	-----	11'-11"	48	36	52.788	1.185	131.215	13'- 6"	6	13'- 2"	1	8	2.233	105.825	2.214	79.105	I
6	4	4	12"	5'- 1 3/4"	0'- 4 1/2"	2'- 9"	0'- 5 7/8"	0'- 3 3/4"	13'- 8"	-----	13'-11"	56	18	53.114	1.061	125.672	15'- 6"	6	15'- 2"	1	5	2.138	107.487	2.144	91.121	C
6	5	4	12"	5'- 1 3/4"	0'- 4 1/2"	2'- 9"	0'- 5 7/8"	0'- 3 3/4"	13'- 8"	-----	13'-11"	56	24	55.232	1.135	131.936	15'- 6"	6	15'- 2"	1	6	2.237	110.939	2.237	91.121	E
6	6	4	12"	5'- 1 3/4"	0'- 4 1/2"	2'- 9"	0'- 5 7/8"	0'- 3 3/4"	13'- 8"	-----	13'-11"	56	30	57.350	1.209	138.200	15'- 6"	6	15'- 2"	1	7	2.336	114.390	2.330	91.121	G
6	7	4	12"	5'- 1 3/4"	0'- 4 1/2"	2'- 9"	0'- 5 7/8"	0'- 3 3/4"	13'- 8"	-----	13'-11"	56	36	59.468	1.282	144.464	15'- 6"	6	15'- 2"	1	8	2.435	117.841	2.423	91.121	I
6	8	4	12"	5'- 1 3/4"	0'- 4 1/2"	2'- 9"	0'- 5 7/8"	0'- 3 3/4"	13'- 8"	-----	13'-11"	56	42	61.586	1.355	158.499	15'- 6"	6	15'- 2"	1	9	2.534	121.293	2.515	91.121	K
7	4	4	12"	5'-11 3/8"	0'- 4 1/2"	3'- 1 7/8"	0'- 5 7/8"	0'- 3 3/4"	15'- 8 1/8"	-----	15'-11"	64	18	59.794	1.159	147.546	17'- 6"	6	17'- 2"	1	5	2.341	119.503	2.353	103.137	C
7	6	4	12"	5'-11 3/8"	0'- 4 1/2"	3'- 1 7/8"	0'- 5 7/8"	0'- 3 3/4"	15'- 8 1/8"	-----	15'-11"	64	30	64.030	1.305	166.367	17'- 6"	6	17'- 2"	1	7	2.539	126.406	2.539	103.137	G
7	8	4	12"	5'-11 3/8"	0'- 4 1/2"	3'- 1 7/8"	0'- 5 7/8"	0'- 3 3/4"	15'- 8 1/8"	-----	15'-11"	64	42	68.266	1.453	178.895	17'- 6"	6	17'- 2"	1	9	2.736	133.309	2.724	103.137	K
7	10	4	11"	5'-11 3/8"	0'- 4 1/2"	3'- 1 7/8"	0'- 5 7/8"	0'- 3 3/4"	15'- 8 1/8"	-----	15'-11"	64	54	72.502	1.599	198.464	17'- 6"	6	17'- 2"	1	11	2.934	140.211	2.910	103.137	O
8	4	4	10"	6'- 8 3/4"	0'- 4 3/4"	3'- 6 3/8"	0'- 6 1/4"	0'- 4"	17'- 7 7/8"	-----	17'-11"	72	18	66.474	1.283	182.386	19'- 6"	6	19'- 2"	1	5	2.534	131.519	2.553	115.153	C
8	6	4	10"	6'- 8 5/8"	0'- 5"	3'- 6 1/8"	0'- 6 1/2"	0'- 4 1/4"	17'- 7 7/8"	-----	17'-11"	72	30	70.710	1.458	193.740	19'- 6"	6	19'- 2"	1	7	2.723	138.422	2.730	115.153	G
8	8	4	9"	6'- 8 1/2"	0'- 5 1/4"	3'- 5 7/8"	0'- 6 7/8"	0'- 4 1/2"	17'- 7 7/8"	-----	18'- 0"	72	42	74.946	1.631	220.356	19'- 6"	6	19'- 2"	1	9	2.912	145.325	2.906	115.153	K
8	10	4	10"	6'- 8 3/8"	0'- 5 1/2"	3'- 5 5/8"	0'- 7 1/4"	0'- 4 3/4"	17'- 7 7/8"	-----	18'- 0"	72	54	79.182	1.806	239.275	19'- 6"	6	19'- 2"	1	11	3.101	152.227	3.083	115.153	O
9	4	4	9"	7'- 5 7/8"	0'- 5 3/4"	3'-10 1/4"	0'- 7 5/8"	0'- 5"	19'- 8"	-----	20'- 0"	80	18	73.154	1.503	240.157	21'- 6"	6	21'- 2"	1	5	2.711	143.535	2.737	127.169	D
9	6	4	9"	7'- 5 3/4"	0'- 6"	3'-10"	0'- 8"	0'- 5 1/4"	19'- 8"	-----	20'- 0"	80	30	77.390	1.682	241.260	21'- 6"	6	21'- 2"	1	7	2.899	150.438	2.912	127.169	H
9	8	4	9"	7'- 5 5/8"	0'- 6 1/4"	3'- 9 3/4"	0'- 8 3/8"	0'- 5 1/2"	19'- 8"	-----	20'- 1"	80	42	81.626	1.860	254.827	21'- 6"	6	21'- 2"	1	9	3.086	157.341	3.087	127.169	L
9	10	4	9"	7'- 5 5/8"	0'- 6 1/4"	3'- 9 3/4"	0'- 8 3/8"	0'- 5 1/2"	19'- 8"	-----	20'- 1"	80	54	85.862	2.007	277.942	21'- 6"	6	21'- 2"	1	11	3.284	164.243	3.272	127.169	P
9	12	4	8"	7'- 5 1/2"	0'- 6 1/2"	3'- 9 1/2"	0'- 8 5/8"	0'- 5 3/4"	19'- 8"	-----	20'- 1"	80	66	90.098	2.182	322.702	21'- 6"	6	21'- 2"	1	13	3.471	171.146	3.447	127.169	T
10	4	4	8"	8'- 3 1/8"	0'- 6 1/2"	4'- 2 1/4"	0'- 8 5/8"	0'- 5 3/4"	21'- 8"	-----	22'- 1"	88	18	79.834	1.716	282.888	23'- 6"	6	23'- 2"	1	5	2.870	155.551	2.902	139.185	D
10	6	5	9"	8'- 3"	0'- 6 7/8"	4'- 2"	0'- 9 1/8"	0'- 6"	21'- 8"	-----	22'- 1"	88	30	84.070	1.897	305.203	23'- 6"	6	23'- 2"	1	7	3.055	162.454	3.075	139.185	H
10	8	5	9"	8'- 2 7/8"	0'- 7 1/8"	4'- 1 3/4"	0'- 9 1/2"	0'- 6 1/4"	21'- 8"	-----	22'- 1"	88	42	88.306	2.078	321.085	23'- 6"	6	23'- 2"	1	9	3.241	169.357	3.249	139.185	L
10	10	5	10"	8'- 2 3/4"	0'- 7 3/8"	4'- 1 1/2"	0'- 9 7/8"	0'- 6 1/2"	21'- 8"	-----	22'- 1"	88	54	92.542	2.259	326.146	23'- 6"	6	23'- 2"	1	11	3.427	176.259	3.422	139.185	P
10	12	5	10"	8'- 2 3/4"	0'- 7 3/8"	4'- 1 1/2"	0'- 9 7/8"	0'- 6 1/2"	21'- 8"	-----	22'- 1"	88	66	96.778	2.405	357.699	23'- 6"	6	23'- 2"	1	13	3.625	183.162	3.608	139.185	T
12	6	5	9"	9'- 9 3/8"	0'- 8 5/8"	4'- 9 7/8"	0'-11 5/8"	0'- 7 3/4"	25'- 8 1/8"	-----	26'- 2"	104	30	97.430	2.424	389.599	27'- 6"	6	27'- 2"	1	7	3.326	186.486	3.359	163.217	H
12	8	5	9"	9'- 9 1/4"	0'- 8 7/8"	4'- 9 5/8"	1'- 0"	0'- 8"	25'- 8 1/8"	-----	26'- 3"	104	42	101.666	2.612	402.541	27'- 6"	6	27'- 2"	1	9	3.509	193.389	3.530	163.217	L
12	10	5	9"	9'- 9 1/8"	0'- 9 1/8"	4'- 9 3/8"	1'- 1/4"	0'- 8 1/4"	25'- 8 1/8"	-----	26'- 3"	104	54	105.902	2.799	409.110	27'- 6"	6	27'- 2"	1	11	3.691	200.291	3.700	163.217	P
12	12	5	9"	9'- 9 1/8"	0'- 9 1/8"	4'- 9 3/8"	1'- 1/4"	0'- 8 1/4"	25'- 8 1/8"	-----	26'- 3"	104	66	110.138	2.942	486.083	27'- 6"	6	27'- 2"	1	13	3.889	207.194	3.885	163.217	T

Sheet 2 of 2

STRUCTURE AND BRIDGE DIVISION

DOUBLE BOX CULVERTS

5 TO 10 FT. FILLS

VIRGINIA DEPARTMENT OF TRANSPORTATION

1003.09

U.S. DEPARTMENT OF TRANSPORTATION
FEDERAL HIGHWAY ADMINISTRATION
EASTERN FEDERAL LANDS HIGHWAY DIVISION
STERLING, VIRGINIA

DETAIL

BOX CULVERT
(DOUBLE BARREL)

DETAIL APPROVED FOR USE --/----

REVISED:

DETAIL
602-B

10/24/2006 9:27:44 AM M:\Projects\vll\st_crd\rvh66(008)pro1_dev\Contract 2\details\boxstd2.dgn

REG	STATE	PROJECT	SHEET NO.	TOTAL SHEETS
SE	VI	NH-66(008)	M39	193

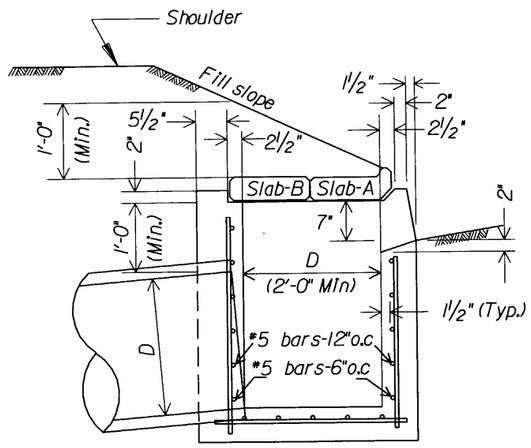

TYPE - 4A

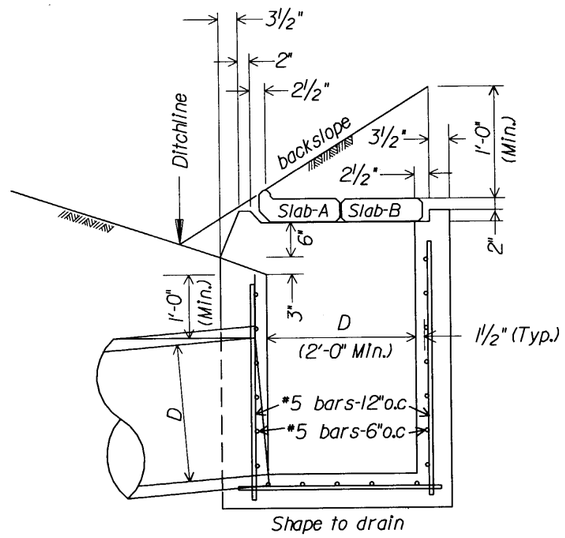

TYPE - 4B

Notes:

1. At the option of the Contractor, walls less than 4 feet deep may be of concrete or concrete block.
2. Inlets to be parallel to roadway centerline and grade. For pipes on skew, adjust inlets as directed.
3. Ditch or paved waterways to be warped and widened near inlets as directed by the CO. to facilitate drainage and to protect slopes at ends of inlets.
4. For payment purposes, one slab A plus one slab B or two slabs B constitute one concrete cover.

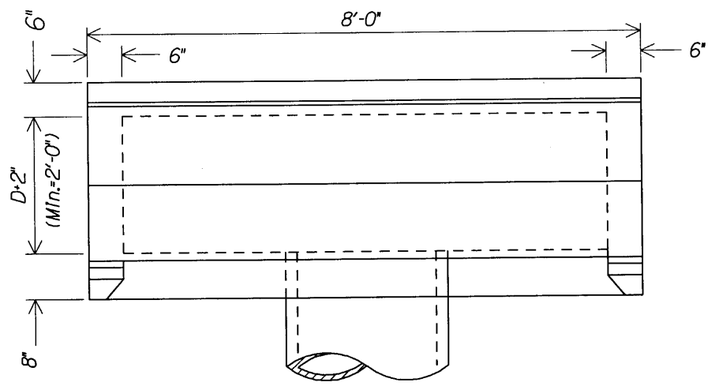

PLAN

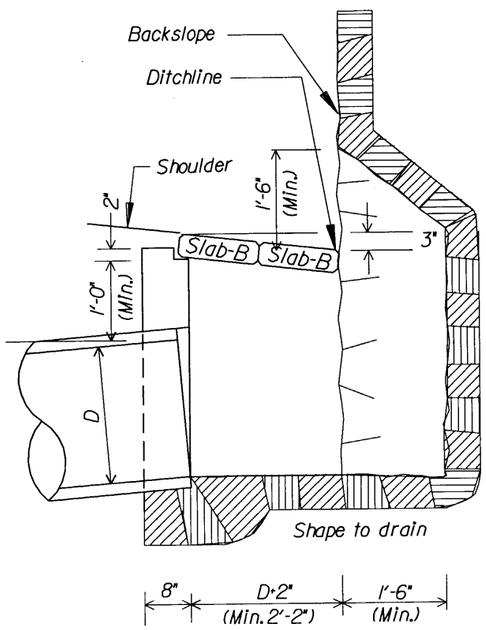

TYPE - 4C

Note: In rock without backwall or floor. Reinforce same as Type 4A

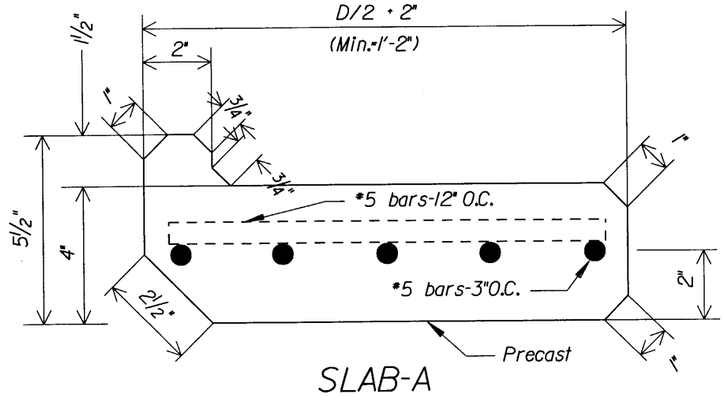

SLAB-A

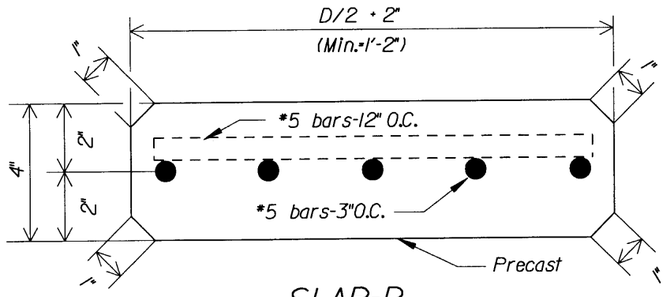

SLAB-B

Length of slabs 8'-0"

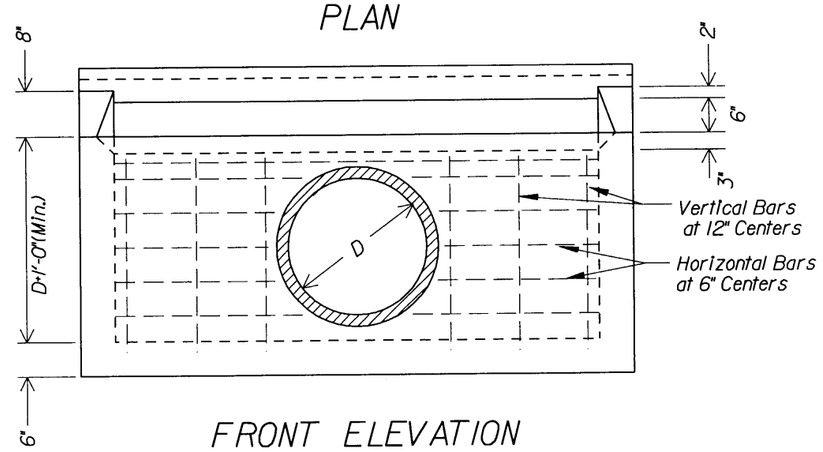

FRONT ELEVATION

(Type 4B, shown, other types comparable)

U.S. DEPARTMENT OF TRANSPORTATION
FEDERAL HIGHWAY ADMINISTRATION
EASTERN FEDERAL LANDS HIGHWAY DIVISION

DETAIL

INLET, TYPE 4A, 4B, and 4C

DETAIL APPROVED FOR USE --/----

REVISED:

DETAIL E604-1

10/18/2006 7:27:38 AM M:\Projects\wlfs\st_crd\x\vt66\008\proj_dev\Contract 2\details\Details\2.dgn

REG	STATE	PROJECT	SHEET NO.	TOTAL SHEETS
SE	VI	NH-66(008)	M40	193

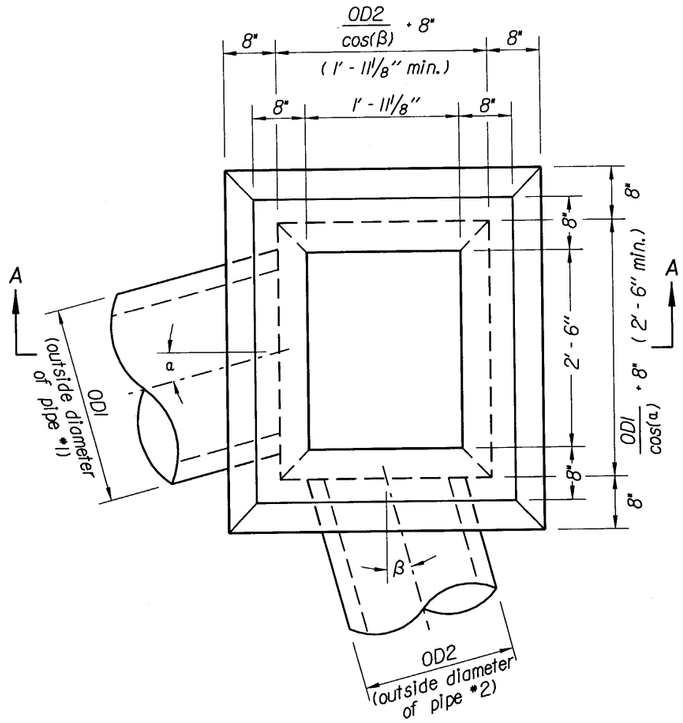

INLET, TYPE 6A

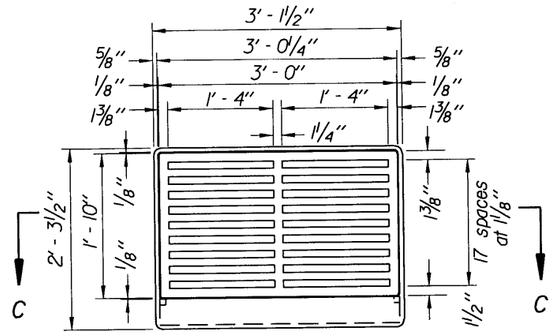

METAL FRAMES AND GRATINGS TYPE 6A

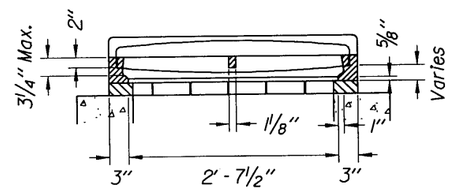

SECTION C-C

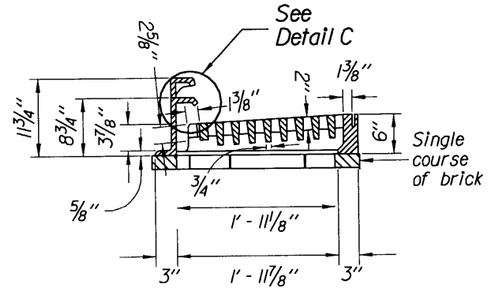

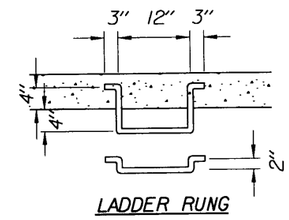

LADDER RUNG

3/4"ø or 3/4"□ Steel or Wrought Iron to be used where depth exceeds 4'-0"

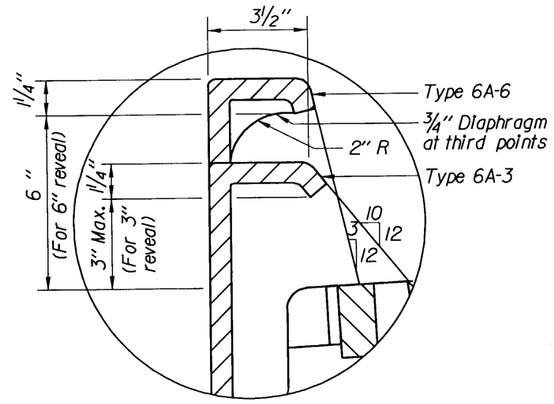

DETAIL C

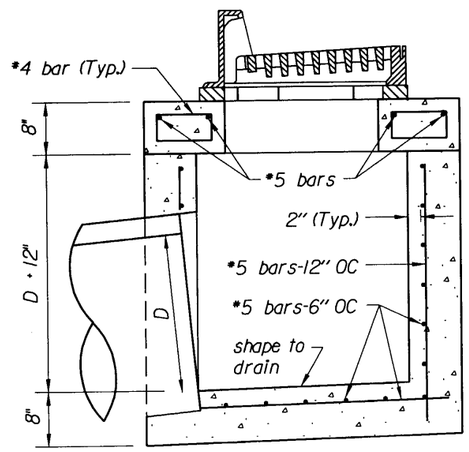

Limited Headroom
SECTION A-A

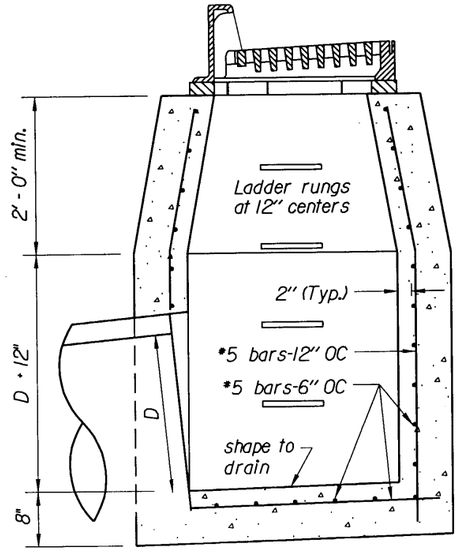

Ample Headroom
SECTION A-A

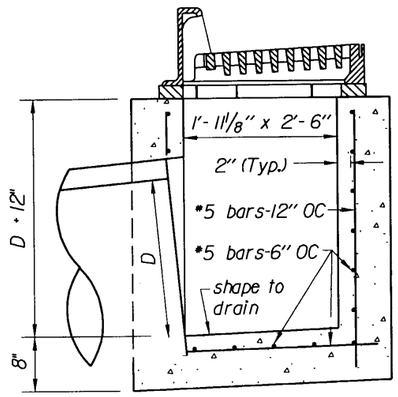

For minimum inside inlet dimensions only
SECTION A-A

Notes:

1. At the option of the Contractor walls less than 4 feet may be of concrete as shown.
2. Construct Type A inlets for pipes 24 inch and larger "For Ample Headroom", unless otherwise directed by the CO.
3. Construct inlets parallel to the roadway centerline and grade. Adapt inlets as directed by the CO.
4. For frames and gratings minor variations in design and dimensions are permitted to allow manufacturers standards.

U.S. DEPARTMENT OF TRANSPORTATION
FEDERAL HIGHWAY ADMINISTRATION
EASTERN FEDERAL LANDS HIGHWAY DIVISION

DETAIL

INLET, TYPE 6A

DETAIL APPROVED FOR USE --/----

REVISED:

DETAIL
E604-5

10/18/2006 7:29:18 AM M:\Projects\vlls\st_crolx\nh66(008)\proj_dev\Contract 2\details\Details\2.dgn

REG	STATE	PROJECT	SHEET NO.	TOTAL SHEETS
SE	VI	NH-66(008)	M41	193

Notes:

1. At the option of the Contractor, walls less than 4 feet may be of concrete or concrete block.

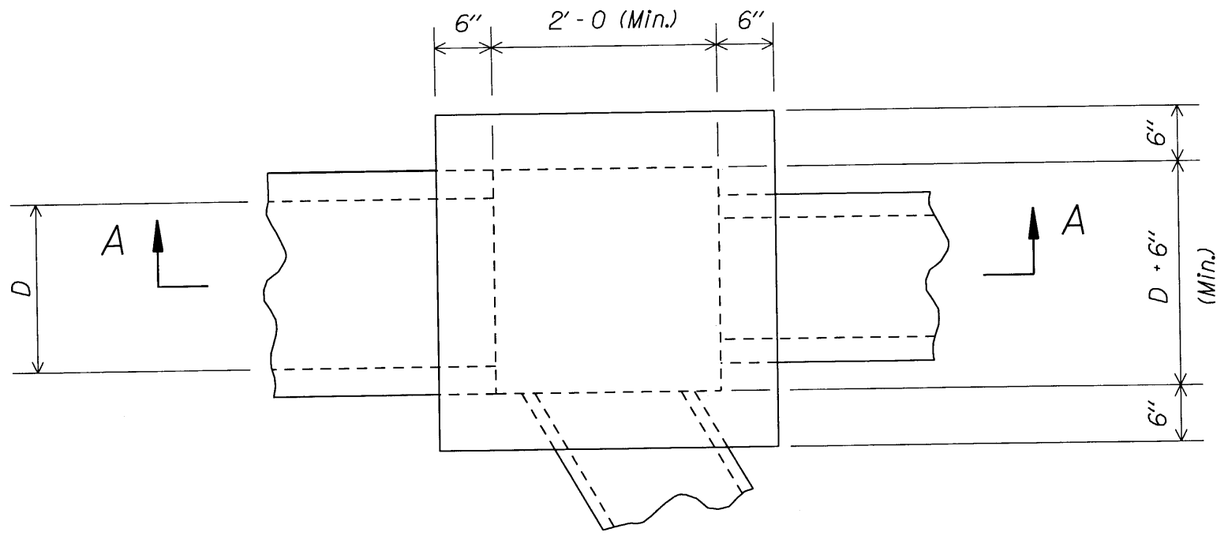

PLAN

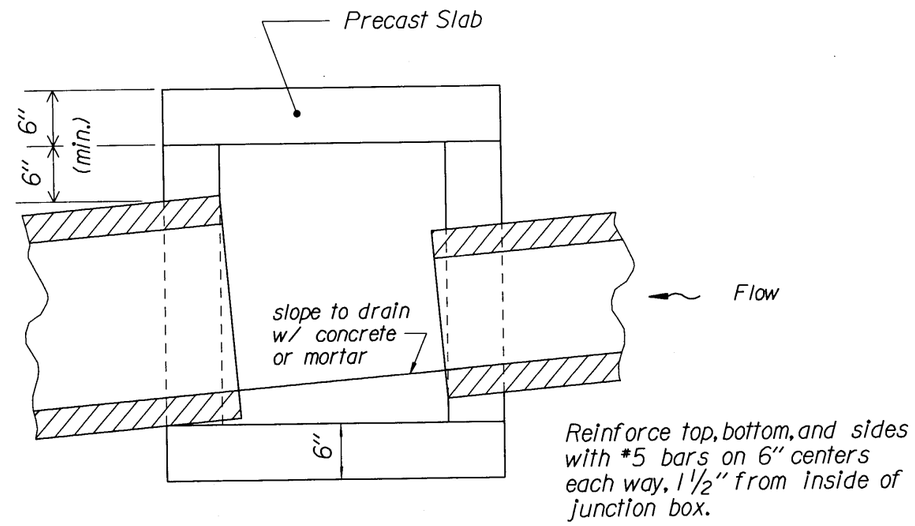

SECTION A-A

U.S. DEPARTMENT OF TRANSPORTATION
FEDERAL HIGHWAY ADMINISTRATION
EASTERN FEDERAL LANDS HIGHWAY DIVISION

DETAIL

JUNCTION BOX

DETAIL APPROVED FOR USE --/----

REVISED:

DETAIL E604-6

10/18/2006 7:30:27 AM M:\Projects\vlfs\st_crol\nh66\008\proj_dev\Contract 2\details\Details\2.dgn

REG	STATE	PROJECT	SHEET NO.	TOTAL SHEETS
SE	VI	NH-66(008)	M42	193

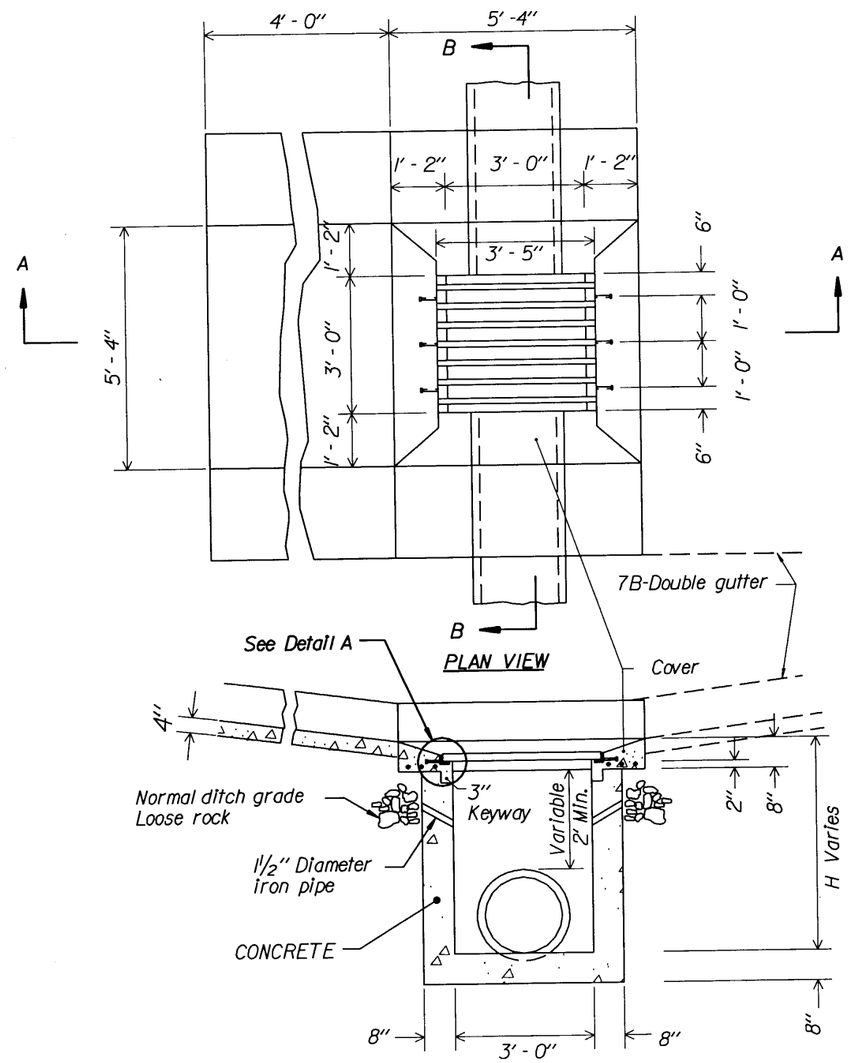

PLAN VIEW

SECTION A-A

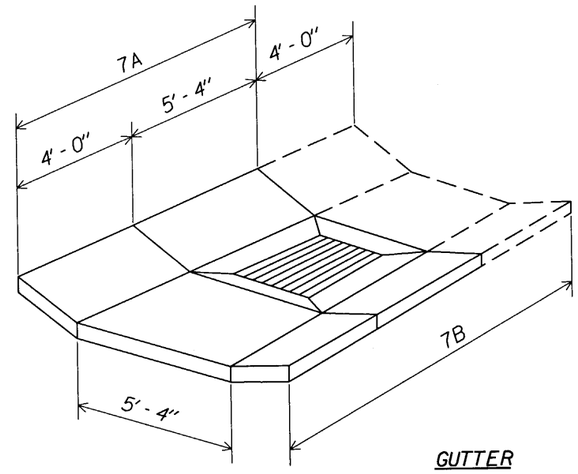

GUTTER

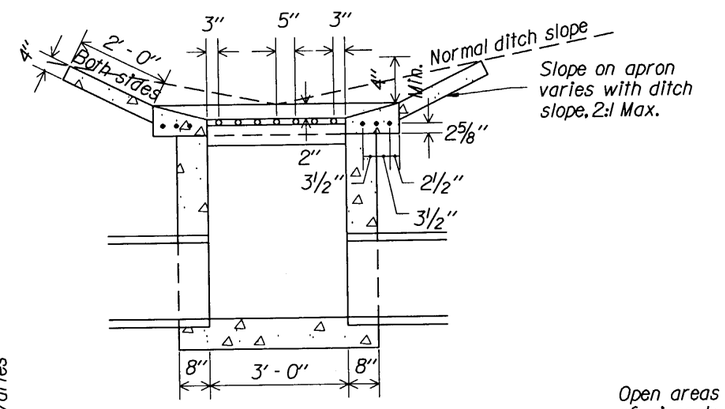

SECTION B-B

Notes:

1. 7A = single gutter when inlet is on a grade.
2. 7B = double gutter when inlet is in a sag between two grades
3. All concrete quantities are calculated without pipe areas deducted.
4. Ditch to be warped to tie smoothly into inlet gutter.
5. Transition all paved ditches to meet inlet gutter.
6. Outside dimensions of grate to be 3' - 4" X 2' - 11¾"
7. Maximum depth (H) to be 12' - 8"
8. Fabricate galvanized grate in accordance with AASHTO-M111.
9. Alternate methods of anchoring angle iron will be acceptable if approved by the CO.

APPROXIMATE QUANTITIES

Pipe Size	12"	15"	18"	24"	30"	36"
Min. depth H	2'-0"	2'-3¼"	2'-6½"	3'-1"	3'-7½"	4'-2"
C.Y. Conc. Inlet	0.947	1.045	1.143	1.339	1.535	1.731

Increment per foot of additional depth, (H)=0.362 Cu.Yds.

Cu.Yds. Concrete for gutter 7A=0.724, & B=1.184

Cu.Yds. Concrete for Cover=0.423 (Not included above)

Reinforcing Steel For Cover=63 lbs.

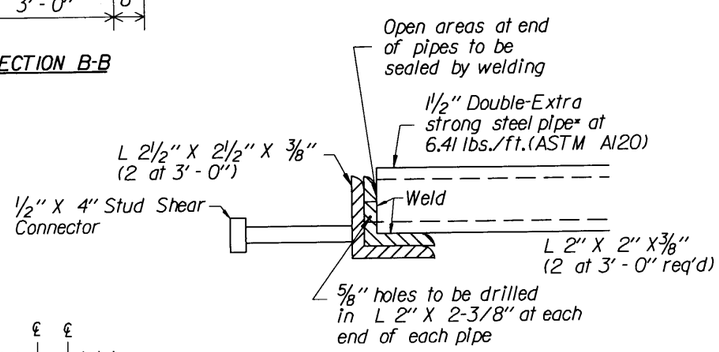

DETAIL A

* 2" Dia. Solid Steel Bar at 10.68 lbs/ft may be substituted.

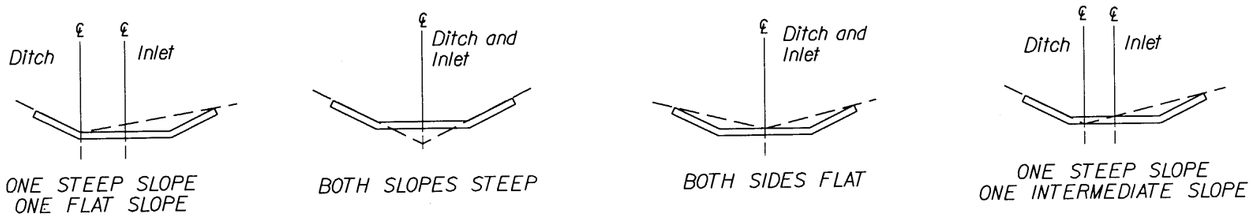

ONE STEEP SLOPE
ONE FLAT SLOPE

BOTH SLOPES STEEP

BOTH SIDES FLAT

ONE STEEP SLOPE
ONE INTERMEDIATE SLOPE

TYPICAL GUTTER PLACEMENT

U.S. DEPARTMENT OF TRANSPORTATION
FEDERAL HIGHWAY ADMINISTRATION
FEDERAL LANDS HIGHWAY

STANDARD

INET TYPE 7A AND 7B
FOR USE WITH 12" to 36" PIPES

STANDARD APPROVED FOR USE --/----

REVISED:

STANDARD
604-8

10/18/2006 7:31:30 AM M:\Projects\vils\st_crolx\nh66(008)proj_dev\Contract 2\details\Details\V2.dgn

REG	STATE	PROJECT	SHEET NO.	TOTAL SHEETS
SE	VI	NH-66(008)	M43	193

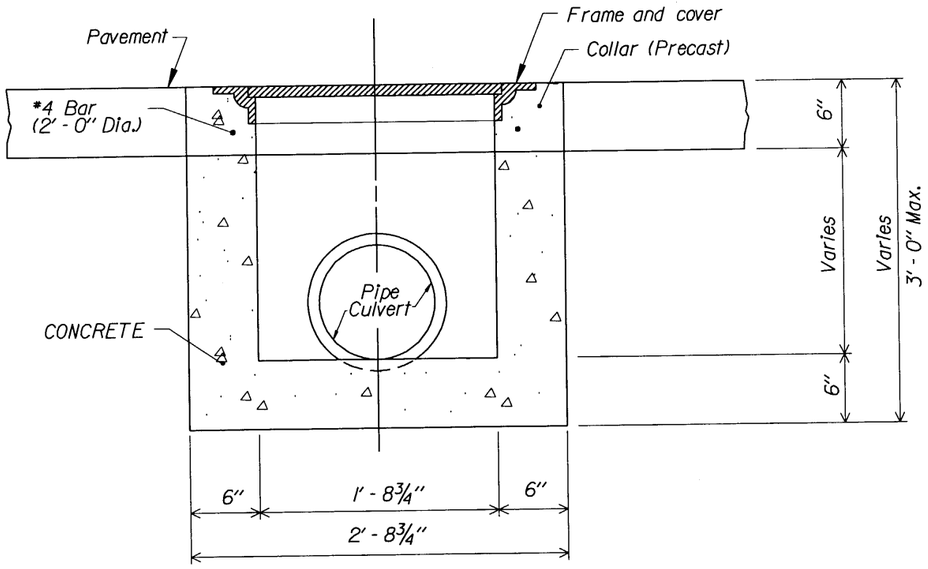

SECTION A-A

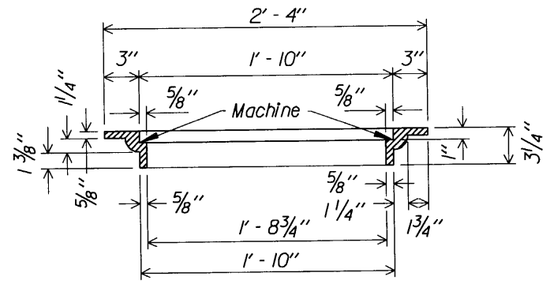

SECTION B-B

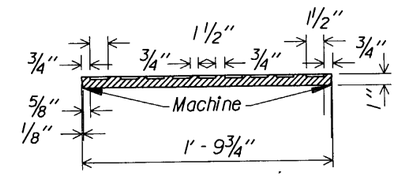

SECTION C-C

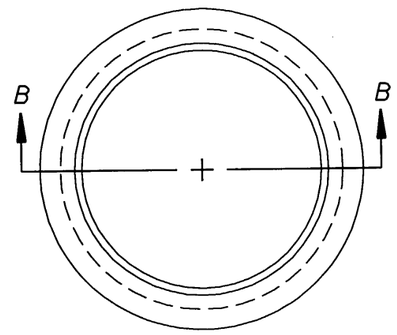

FRAME

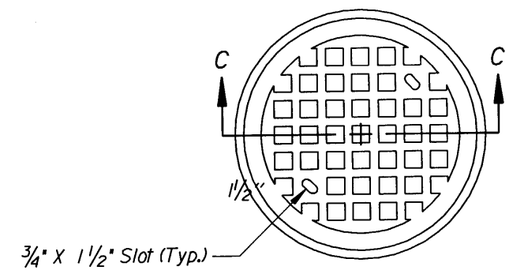

COVER

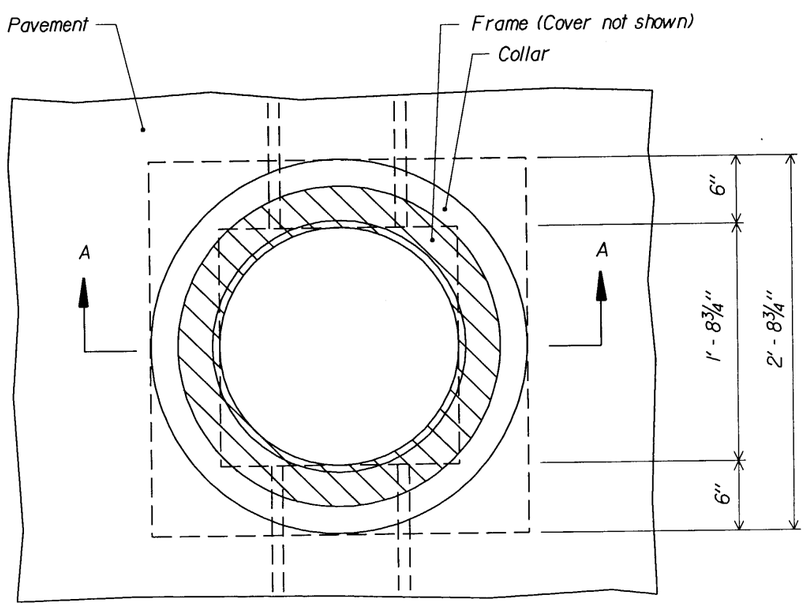

PLAN

Approximate Weight
Cast Iron
Frame 86 ± 4 Lbs.
Cover 83 ± 4 Lbs.

Notes:

1. Frame and cover dimensions may vary slightly to allow manufacturer's standards.

U.S. DEPARTMENT OF TRANSPORTATION
FEDERAL HIGHWAY ADMINISTRATION
FEDERAL LANDS HIGHWAY

STANDARD

MANHOLE

STANDARD APPROVED FOR USE --/----

REVISED:

STANDARD
604-9

10/18/2006 7:32:42 AM M:\Projects\vfls\st_prot\x\nh66(008)proj_dev\Contract 2\details\Details\12.dgn

REG	STATE	PROJECT	SHEET NO	TOTAL SHEETS
SE	VI	NH-66(008)	M44	193

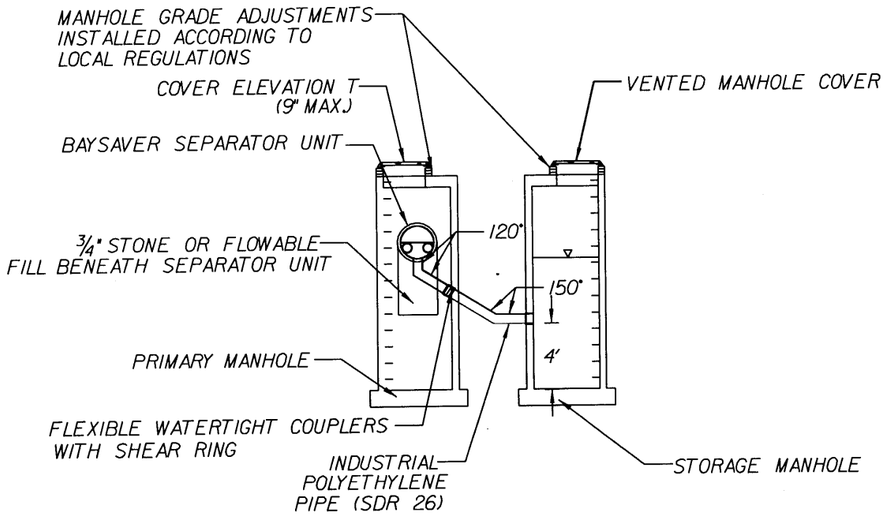

SECTION AA

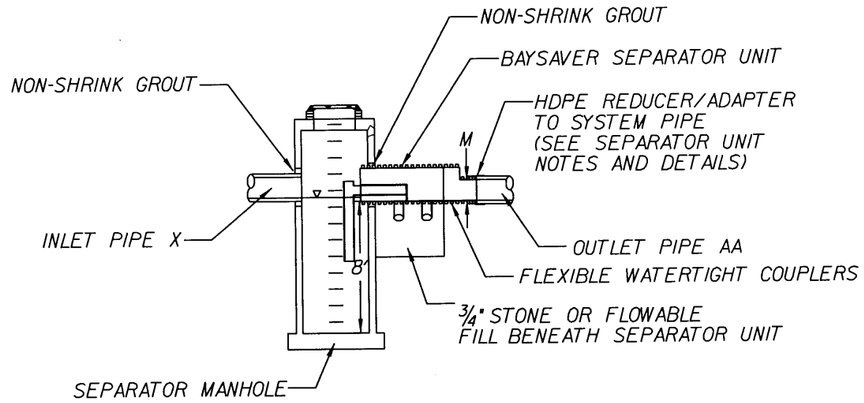

SECTION BB

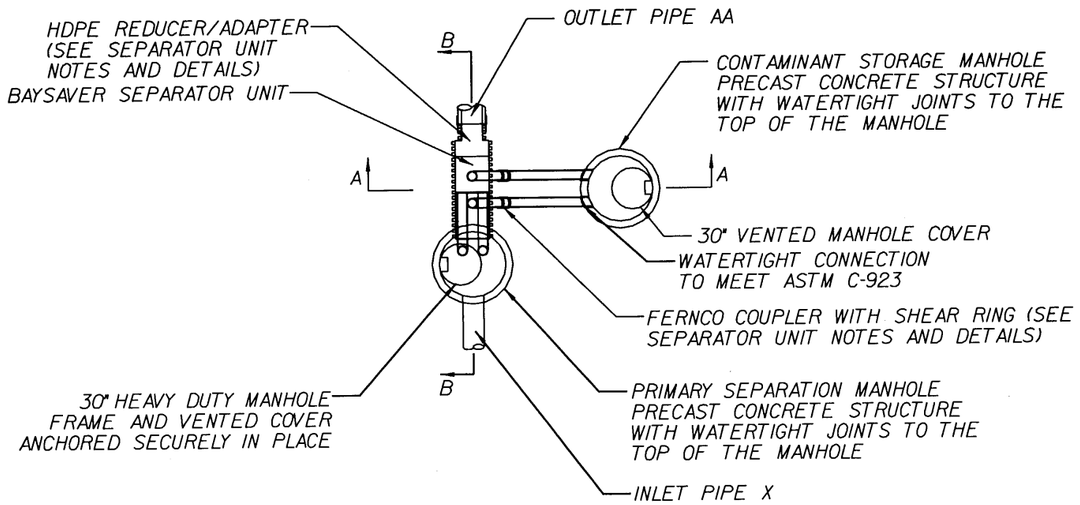

BAYSAVER SEPARATOR UNIT
PLAN VIEW

NOTE

1 FT. MINIMUM COVER REQUIRED OVER SEPARATOR UNIT TO MEET H-20 LOADING CRITERIA.

BAYSAVER, INC. - Ph: 301-829-6470
Fax: 301-829-3747
1010 DEER HOLLOW DRIVE, MOUNT AIRY, MD 21771
THE BAYSAVER SEPARATION SYSTEM IS PROTECTED BY U.S. PATENT #5746911

NO SCALE

U.S. DEPARTMENT OF TRANSPORTATION
FEDERAL HIGHWAY ADMINISTRATION
FEDERAL LANDS HIGHWAY

DETAIL

OIL/GRIT SEPARATION SYSTEM

1 OF 4

REVISED:

DETAIL 604-A

10/18/2006 7:22:09 AM M:\Projects\vlis\st_croix\nh66(008)proj_dev\Contract 2\details\Details\2.dgn

REG	STATE	PROJECT	SHEET NO	TOTAL SHEETS
SE	VI	NH-66(008)	M45	193

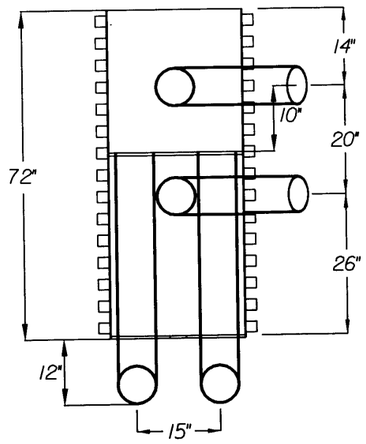

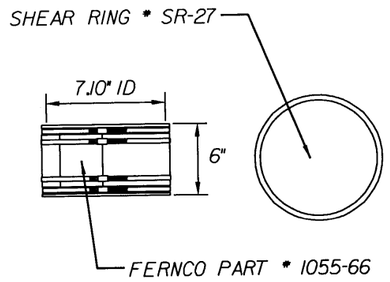

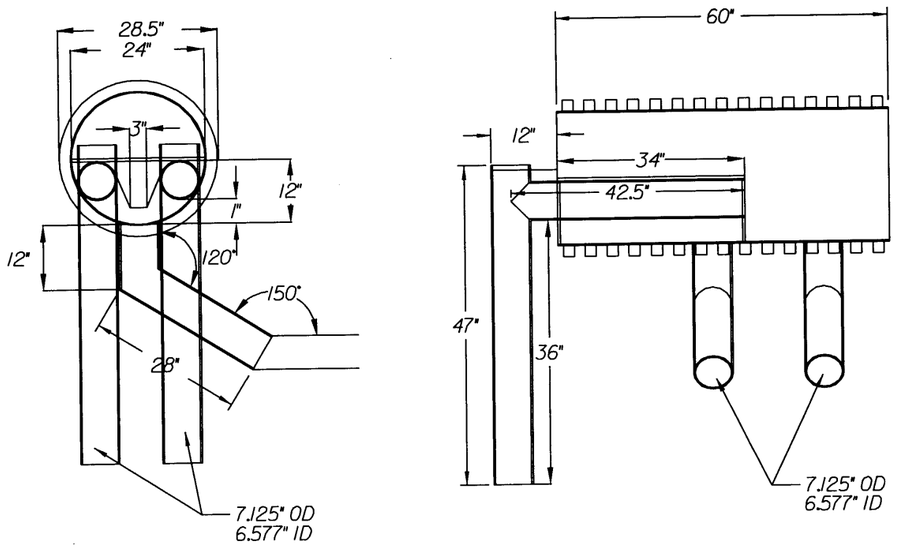

FERNCO FITTING DETAILS

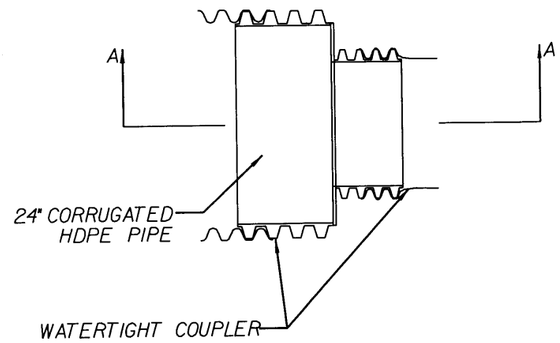

PLAN VIEW

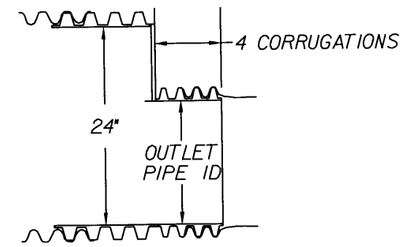

SECTION AA

HDPE-HDPE REDUCER DETAIL

FOR USE WITH OUTLET PIPES

FABRICATION NOTES:

1. Construct separator unit entirely of high density polyethylene. Insure HDPE material contails carbon-black to provide UV resistance.

2. Weld all joints by extrusion welding or butt-fusion welding. Reinforce butt-fused joints with an extruded bead around the fusion area.

3. Use minimum SDR-26 for solid wall HDPE pipe.

4. HDPE plate is ½" thick.

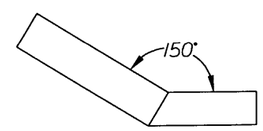

HDPE CONNECTION PIPES

FOR CONNECTION TO STORAGE MANHOLE

NO SCALE

BAYSAVER, INC.- Ph: 301-829-6470
Fax: 301-829-3747
1010 DEER HOLLOW DRIVE, MOUNT AIRY, MD 21771
THE BAYSAVER SEPARATION SYSTEM IS PROTECTED BY U.S. PATENT *5746911

U.S. DEPARTMENT OF TRANSPORTATION
FEDERAL HIGHWAY ADMINISTRATION
FEDERAL LANDS HIGHWAY

DETAIL

OIL/GRIT SEPARATION SYSTEM

½K SEPARATOR UNIT NOTES AND DETAILS

2 OF 4

REVISED:

DETAIL 604-A

10/18/2006 7:25:58 AM Projects\VI\st_croix\nh66(008)\proj_dev\Contract 2\details\Details\Details2.dgn

REG	STATE	PROJECT	SHEET NO	TOTAL SHEETS
SE	VI	NH-66(008)	M46	193

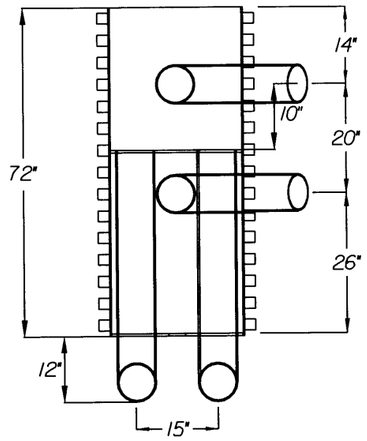

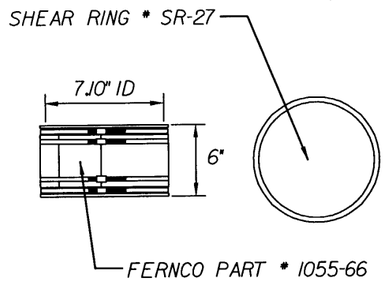

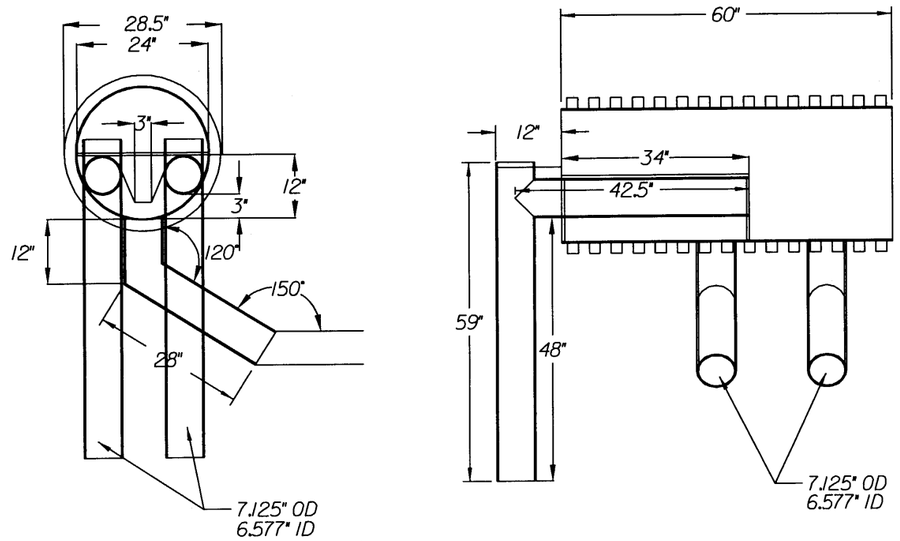

FERNCO FITTING DETAILS

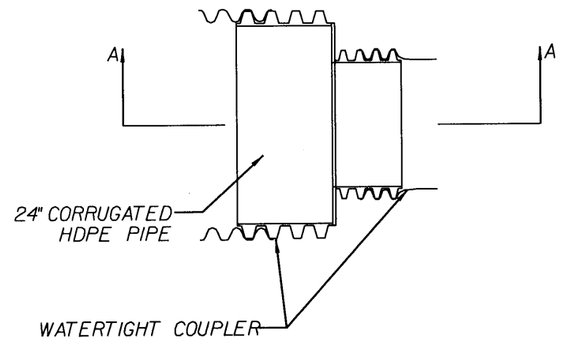

PLAN VIEW

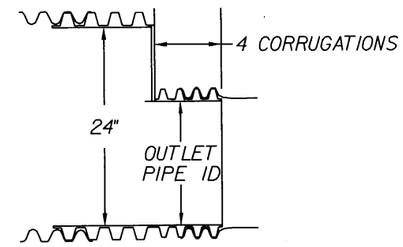

SECTION AA

HDPE-HDPE REDUCER DETAIL

FOR USE WITH OUTLET PIPES

FABRICATION NOTES:

1. Construct separator unit entirely of high density polyethylene. Insure HDPE material contails carbon-black to provide UV resistance.

2. Weld all joints by extrusion welding or butt-fusion welding. Reinforce butt-fused joints with an extruded bead around the fusion area.

3. Use minimum SDR-26 for solid wall HDPE pipe.

4. HDPE plate is 1/2" thick.

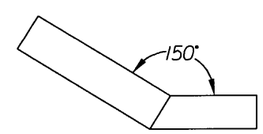

HDPE CONNECTION PIPES

FOR CONNECTION TO STORAGE MANHOLE

NO SCALE

BAYSAVER, INC. - Ph: 301-829-6470
Fax: 301-829-3747
1010 DEER HOLLOW DRIVE, MOUNT AIRY, MD 21771

THE BAYSAVER SEPARATION SYSTEM IS PROTECTED BY U.S. PATENT #5746911

U.S. DEPARTMENT OF TRANSPORTATION
FEDERAL HIGHWAY ADMINISTRATION
FEDERAL LANDS HIGHWAY

DETAIL

OIL/GRIT SEPARATION SYSTEM

1K SEPARATOR UNIT NOTES AND DETAILS

3 OF 4

REVISED:

DETAIL 604-A

10/18/2006 7:23:31 AM:\Projects\vi\st_croix\nh66(008)\proj_dev\Contract 2\details\Details\2.dgn

REG	STATE	PROJECT	SHEET NO	TOTAL SHEETS
SE	VI	NH-66(008)	M47	193

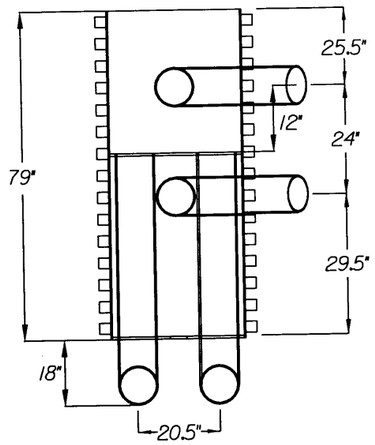

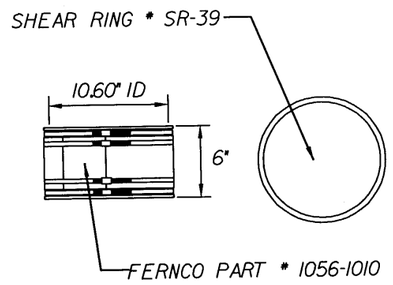

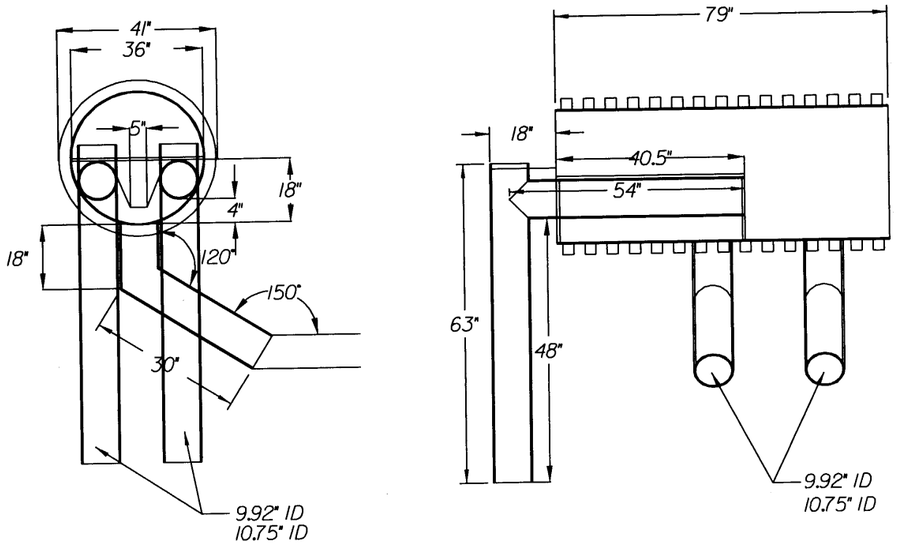

FERNCO FITTING DETAILS

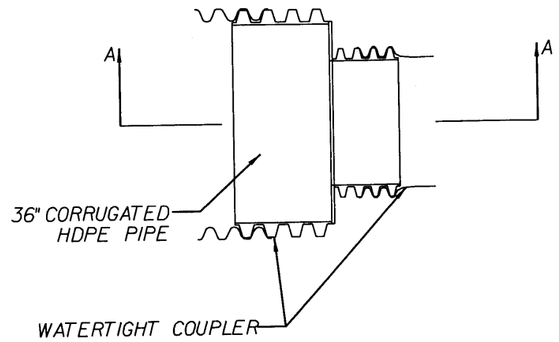

PLAN VIEW

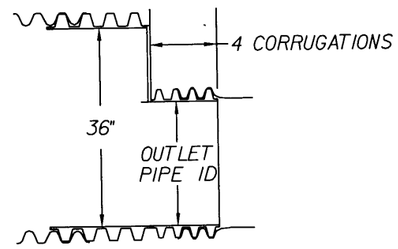

SECTION AA

HDPE-HDPE REDUCER DETAIL

FOR USE WITH OUTLET PIPES

FABRICATION NOTES:

1. Construct separator unit entirely of high density polyethylene. Insure HDPE material contails carbon-black to provide UV resistance.
2. Weld all joints by extrusion welding or butt-fusion welding. Reinforce butt-fused joints with an extruded bead around the fusion area.
3. Use minimum SDR-26 for solid wall HDPE pipe.
4. HDPE plate is 3/4" thick.

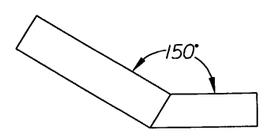

HDPE CONNECTION PIPES

FOR CONNECTION TO STORAGE MANHOLE

NO SCALE

BAYSAVER, INC. - Ph: 301-829-6470
Fax: 301-829-3747
1010 DEER HOLLOW DRIVE, MOUNT AIRY, MD 21771

THE BAYSAVER SEPARATION SYSTEM IS PROTECTED BY U.S. PATENT #5746911

U.S. DEPARTMENT OF TRANSPORTATION
FEDERAL HIGHWAY ADMINISTRATION
FEDERAL LANDS HIGHWAY

DETAIL

OIL/GRIT SEPARATION SYSTEM

3K SEPARATOR UNIT NOTES AND DETAILS

4 OF 4

REVISED:

DETAIL 604-A

10/18/2006 7:24:43 AM\Projects\vils\st_croix\nh66(008)\proj_dev\Contract 2\details\Details\V2.dgn

REG	STATE	PROJECT	SHEET NO.	TOTAL SHEETS
SE	VI	NH-66(008)	M48	193

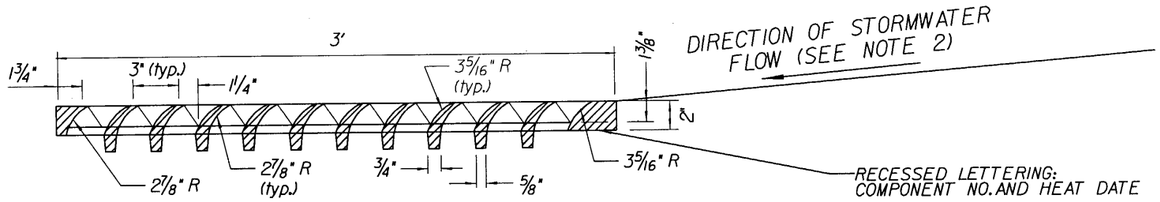

FRONT ELEVATION GRATE TYPE 6A-6 MODIFIED (CURVED VANE GRATINGS)

Notes:

1. For frames and gratings, minor variations in design and dimensions are permitted to allow manufacturers standards. All grates are to be bicycle safe.
2. Orient curved vanes toward direction of stormwater flow. In a sump condition, orientation of curved vanes can be in either direction. Contractor is responsible for correct grate orientation towards stormwater flow.

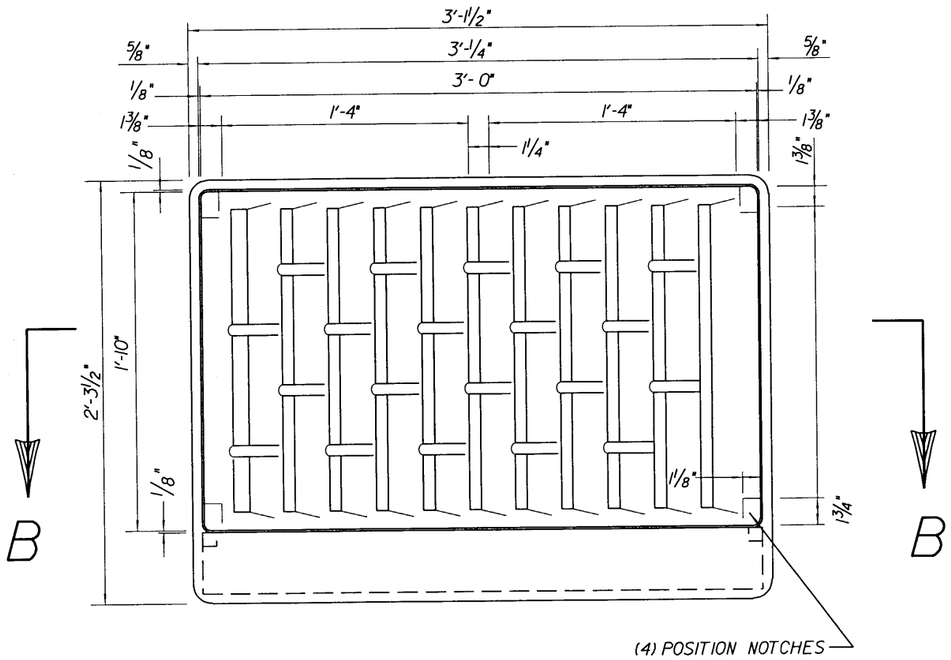

TOP VIEW FRAME AND GRATE TYPE 6A-6 MODIFIED (CURVED VANE GRATINGS)

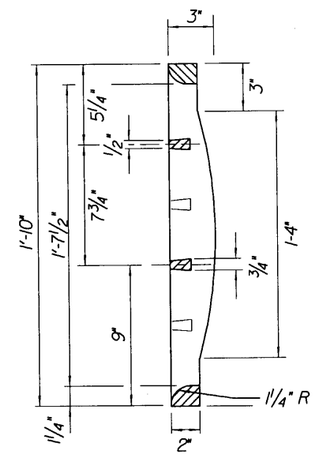

SIDE ELEVATION GRATE TYPE 6A-6 MODIFIED (CURVED VANE GRATINGS)

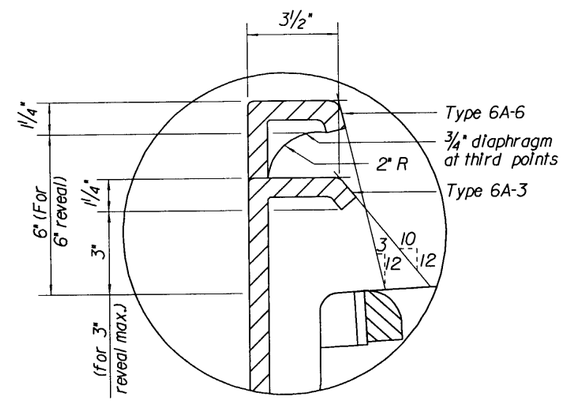

DETAIL A

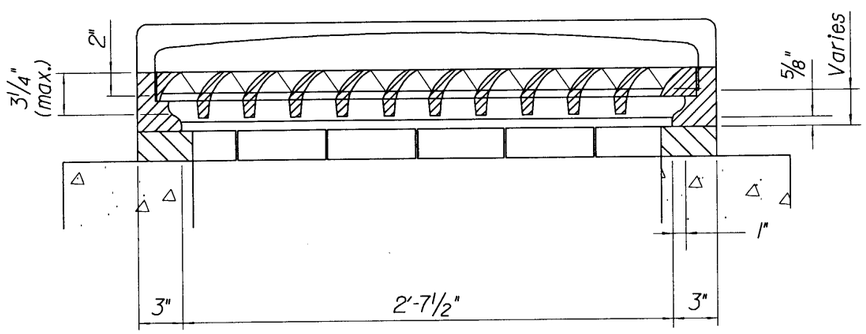

SECTION B-B

METAL FRAMES AND GRATINGS TYPE 6A-6 MODIFIED

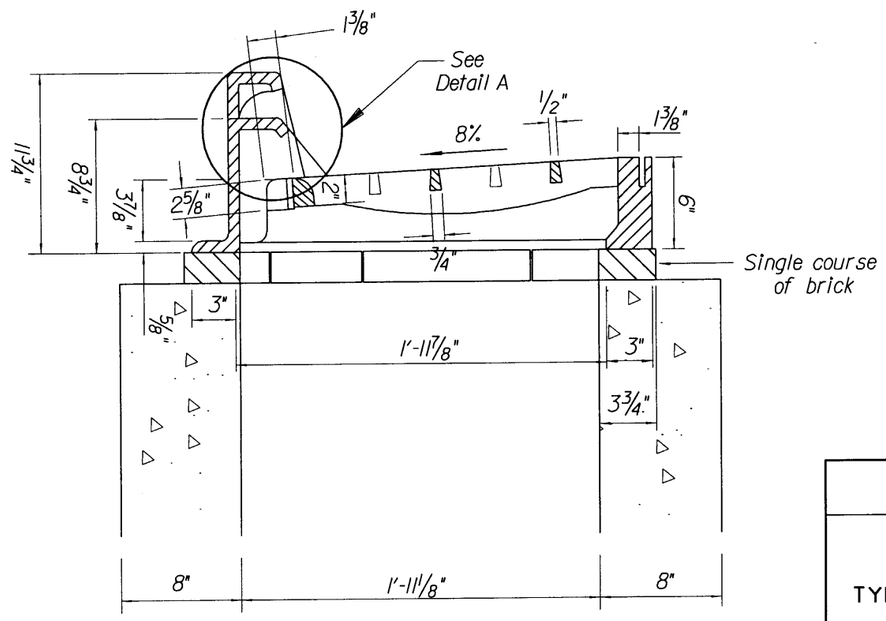

U.S. DEPARTMENT OF TRANSPORTATION
FEDERAL HIGHWAY ADMINISTRATION
EASTERN FEDERAL LANDS HIGHWAY DIVISION

DETAIL

Not to Scale

U.S. DEPARTMENT OF TRANSPORTATION
FEDERAL HIGHWAY ADMINISTRATION
EASTERN FEDERAL LANDS HIGHWAY DIVISION

DETAIL

METAL FRAME AND GRATE, TYPE 6A-6 (CURVED VANE GRATE)

DETAIL APPROVED FOR USE --/----

REVISED: 9/95 7/98 3/02

DETAIL 604-B

10/24/2006 9:29:44 AM M:\Projects\vils\st_croix\nh66(008)proj_dev\Contract 2\details\Details\V2.dgn

REG	STATE	PROJECT	SHEET NO.	TOTAL SHEETS
SE	VI	NH - 66(008)	M49	193

BCW-21

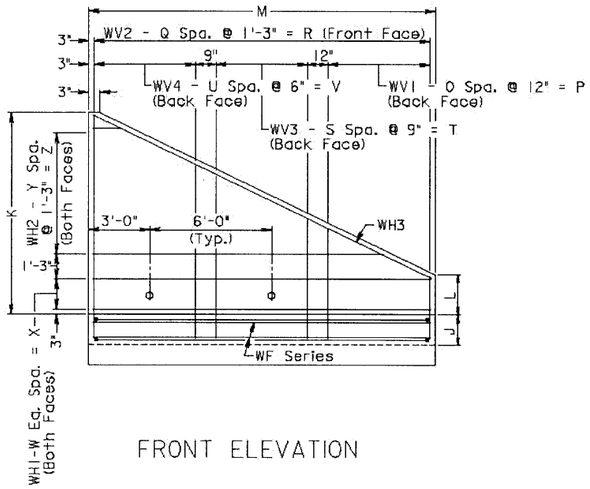

FRONT ELEVATION

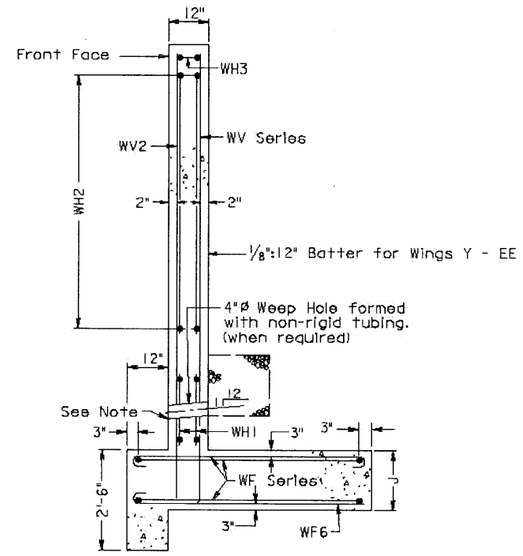

END VIEW

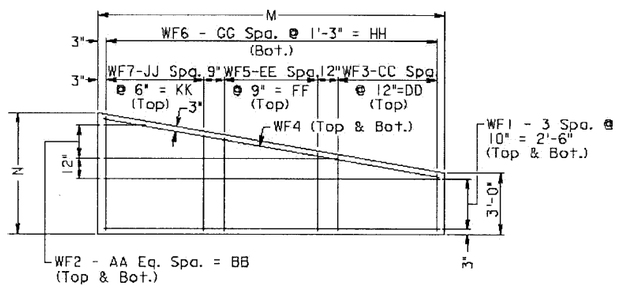

FOOTING PLAN

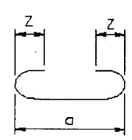

WF3, WF5, WF7

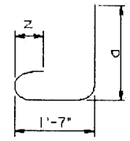

WV1, WV3, WV4

TABLE B		
Bar Size	Pin Dia.	Z
#3	2 1/4"	4"
#4	3"	4 1/2"
#5	3 3/4"	5"
#6	4 1/2"	6"
#7	5 1/4"	7"
#8	6"	8"
#9	9"	10 1/8"

TABLE C	
Bar Size	Splice Length
#4	1'- 4"
#5	1'- 8"
#6	1'-11"
#7	2'- 4"
#8	3'- 1"
#9	3'-11"

Sheet 1 of 7

WING DETAILS

2:1 FILL SLOPE - TYPE I

VIRGINIA DEPARTMENT OF TRANSPORTATION

1006.15

STRUCTURE AND BRIDGE DIVISION

U.S. DEPARTMENT OF TRANSPORTATION
FEDERAL HIGHWAY ADMINISTRATION
EASTERN FEDERAL LANDS HIGHWAY DIVISION

DETAIL

BOX CULVERT
WING DETAIL
(TYPE I)

DETAIL APPROVED FOR USE --/----

REVISED:

DETAIL 604-C

10/24/2006 9:31:45 AM M:\Projects\vlls\st_crolx\nh66(008)\proj_dev\Contract 2\details\boxwing.dgn

REG	STATE	PROJECT	SHEET NO.	TOTAL SHEETS
SE	VI	NH - 66(008)	M50	193

BCW-21

GENERAL NOTE

Specifications:

Construction - Va. Department of Transportation Road and Bridge Specifications, 1991.
Design - AASHTO Standard Specifications for Highway Bridges, 1983, including Interim Specifications, 1984, 1985 and VDOT Modifications, using Load Factor Design.

All concrete shall be Class A4.

Deformed reinforcing bars shall conform to ASTM A615, Grade 60. All reinforcing bar dimensions on the detailed drawing are to centers of bars except where otherwise noted and are subject to fabrication and construction tolerances.

Dimensions on bar diagrams are out-to-out of bars. Bars are straight unless otherwise shown.

The centers of main reinforcing bars shall be 2" from the face of the concrete unless otherwise shown.

At the Contractor's option, WV Series bars may be spliced at the top of footing in order to facilitate construction. Splice lengths shall be in accordance with TABLE C. No additional compensation shall be provided for the increase in reinforcing steel quantity due to the splices.

When concrete protective coating is required, all steel shall be epoxy-coated.

Bearing capacity of foundations shall be 1.5 Tons/Sq. Ft. minimum for wings A - X and 2 Tons/Sq. Ft. minimum for wings Y - EE.

Weepholes shall be placed at lowest point feasible for free drainage away from wing.

Four Type I Wings are to be used for straight crossings and skews up to 20°. Two Type I & two Type II Wings are to be used for skews from 25° to 45°. For skews above 45° special design wings are required. The wingwall to be used for each culvert is shown on the BC series sheets.

The designs shown are applicable for a 45° skew with the roadway and other conditions indicated. Any change in these conditions invalidates these designs.

Quantities shown are for one wing.

WING	Quantity (One Wing) Concrete Cu. Yd.	Reinforcing Steel Lbs.
A	2.334	146.814
B	2.741	179.226
C	3.208	202.300
D	3.658	227.238
E	4.174	268.139
F	4.665	294.699
G	5.412	348.564
H	6.153	378.666
I	6.798	431.368
J	7.621	479.805
K	8.567	531.895
L	9.236	601.618
M	10.275	652.010
N	10.623	706.389
O	11.644	765.083
P	12.804	868.664
Q	13.615	938.923
R	14.852	1247.994
S	16.063	1193.231
T	17.077	1263.468
U	18.343	1566.661
V	19.708	2817.906
W	21.169	1838.465
X	24.710	2352.406
Y	29.398	2856.703
Z	31.458	2680.408
AA	33.355	3557.475
BB	36.175	3205.508
CC	38.270	3362.599
DD	45.675	4925.833
EE	48.208	5122.544

Sheet 2 of 7

STRUCTURE AND BRIDGE DIVISION

WING DETAILS

2:1 FILL SLOPE - TYPE I

VIRGINIA DEPARTMENT OF TRANSPORTATION

1006.16

U.S. DEPARTMENT OF TRANSPORTATION
FEDERAL HIGHWAY ADMINISTRATION
EASTERN FEDERAL LANDS HIGHWAY DIVISION

DETAIL

BOX CULVERT
WING DETAIL
(TYPE I)

DETAIL APPROVED FOR USE --/----

REVISED:

DETAIL
604-C

10/24/2006 9:32:14 AM M:\Projects\vlls\st_crolx\nh66(008)\proj_dev\Contract 2\details\boxwing.dgn

REG	STATE	PROJECT	SHEET NO.	TOTAL SHEETS
SE	VI	NH - 66(008)	M51	193

BCW-21

WING	DIMENSIONS J	K	L	M	N	BAR SPACINGS WV1 O	P	WV2 Q	R	WV3 S	T	WV4 U	V	WH1 W	X	WH2 Y	Z	WF2 AA	BB	WF3 CC	DD	WF5 EE	FF	WF6 GG	HH	WF7 JJ	KK	NO. WEEP HOLES
A	1'- 6"	4'- 0"	1'- 6"	7'- 0"	4'- 0"	6	6'- 0"	5	6'- 3"	--	-----	--	-----	--	-----	1	1'- 3"	--	-----	6	6'- 0"	--	-----	5	6'- 3"	--	-----	--
B	1'- 6"	4'- 6"	1'- 6"	8'- 0"	4'- 0"	7	7'- 0"	6	7'- 6"	--	-----	--	-----	1	0'- 6"	1	1'- 3"	--	-----	7	7'- 0"	--	-----	6	7'- 6"	--	-----	--
C	1'- 6"	5'- 0"	1'- 9"	9'- 0"	4'- 0"	8	8'- 0"	6	7'- 6"	--	-----	--	-----	1	1'- 0"	1	1'- 3"	--	-----	8	8'- 0"	--	-----	6	7'- 6"	--	-----	--
D	1'- 6"	5'- 6"	1'- 9"	10'- 0"	4'- 0"	9	9'- 0"	7	8'- 9"	--	-----	--	-----	--	-----	2	2'- 6"	--	-----	9	9'- 0"	--	-----	7	8'- 9"	--	-----	--
E	1'- 6"	6'- 0"	2'- 0"	11'- 0"	4'- 0"	10	10'- 0"	8	10'- 0"	--	-----	--	-----	1	0'- 9"	2	2'- 6"	--	-----	10	10'- 0"	--	-----	8	10'- 0"	--	-----	--
F	1'- 6"	6'- 6"	2'- 0"	12'- 0"	4'- 0"	11	11'- 0"	9	11'- 3"	--	-----	--	-----	1	1'- 3"	2	2'- 6"	--	-----	11	11'- 0"	--	-----	9	11'- 3"	--	-----	--
G	1'- 6"	7'- 0"	2'- 3"	13'- 0"	4'- 6"	12	12'- 0"	10	12'- 6"	--	-----	--	-----	2	1'- 9"	2	2'- 6"	--	-----	12	12'- 0"	--	-----	10	12'- 6"	--	-----	--
H	1'- 6"	7'- 6"	2'- 3"	14'- 0"	5'- 0"	13	13'- 0"	10	12'- 6"	--	-----	--	-----	1	1'- 0"	3	3'- 9"	--	-----	13	13'- 0"	--	-----	10	12'- 6"	--	-----	--
I	1'- 6"	8'- 0"	2'- 6"	15'- 0"	5'- 0"	14	14'- 0"	11	13'- 9"	--	-----	--	-----	2	1'- 6"	3	3'- 9"	--	-----	14	14'- 0"	--	-----	11	13'- 9"	--	-----	--
J	1'- 6"	8'- 6"	2'- 6"	16'- 0"	5'- 6"	15	15'- 0"	12	15'- 0"	--	-----	--	-----	2	2'- 0"	3	3'- 9"	1	0'- 9"	15	15'- 0"	--	-----	12	15'- 0"	--	-----	--
K	1'- 6"	9'- 0"	2'- 9"	17'- 0"	6'- 0"	16	16'- 0"	13	16'- 3"	--	-----	--	-----	1	1'- 3"	4	5'- 0"	2	1'- 3"	16	16'- 0"	--	-----	13	16'- 3"	--	-----	--
L	1'- 6"	9'- 6"	2'- 9"	18'- 0"	6'- 0"	12	12'- 0"	14	17'- 6"	6	4'- 6"	--	-----	2	1'- 9"	4	5'- 0"	2	1'- 3"	17	17'- 0"	--	-----	14	17'- 6"	--	-----	--
M	1'- 6"	10'- 0"	3'- 0"	19'- 0"	6'- 6"	13	13'- 0"	14	17'- 6"	6	4'- 6"	--	-----	2	2'- 3"	4	5'- 0"	2	1'- 9"	13	13'- 0"	6	4'- 6"	14	17'- 6"	--	-----	--
N	1'- 6"	10'- 6"	3'- 6"	19'- 0"	6'- 6"	10	10'- 0"	14	17'- 6"	6	4'- 6"	4	2'- 0"	3	2'- 9"	4	5'- 0"	2	1'- 9"	13	13'- 0"	6	4'- 6"	14	17'- 6"	--	-----	--
O	1'- 6"	11'- 0"	3'- 6"	20'- 0"	7'- 0"	11	11'- 0"	15	18'- 9"	6	4'- 6"	4	2'- 0"	2	2'- 0"	5	6'- 3"	3	2'- 3"	14	14'- 0"	6	4'- 6"	15	18'- 9"	--	-----	1
P	1'- 6"	11'- 6"	3'- 9"	21'- 0"	7'- 6"	8	8'- 0"	16	20'- 0"	9	6'- 9"	8	4'- 0"	2	2'- 6"	5	6'- 3"	3	2'- 9"	9	9'- 0"	5	3'- 9"	16	20'- 0"	12	6'- 0"	1
Q	1'- 6"	12'- 0"	3'- 9"	22'- 0"	7'- 6"	9	9'- 0"	17	21'- 3"	9	6'- 9"	8	4'- 0"	3	3'- 0"	5	6'- 3"	3	2'- 9"	10	10'- 0"	5	3'- 9"	17	21'- 3"	12	6'- 0"	1
R	1'- 6"	12'- 6"	4'- 0"	23'- 0"	8'- 0"	10	10'- 0"	18	22'- 6"	9	6'- 9"	8	4'- 0"	3	3'- 6"	5	6'- 3"	4	3'- 3"	11	11'- 0"	5	3'- 9"	18	22'- 6"	12	6'- 0"	1
S	1'- 6"	13'- 0"	4'- 0"	24'- 0"	8'- 6"	11	11'- 0"	18	22'- 6"	9	6'- 9"	8	4'- 0"	3	2'- 9"	6	7'- 6"	4	3'- 9"	12	12'- 0"	5	3'- 9"	18	22'- 6"	12	6'- 0"	1
T	1'- 6"	13'- 6"	4'- 3"	25'- 0"	8'- 6"	12	12'- 0"	19	23'- 9"	9	6'- 9"	8	4'- 0"	3	3'- 3"	6	7'- 6"	4	3'- 9"	9	9'- 0"	7	5'- 3"	19	23'- 9"	17	8'- 6"	2
U	1'- 6"	14'- 0"	4'- 3"	26'- 0"	9'- 0"	12	12'- 0"	20	25'- 0"	9	6'- 9"	10	5'- 0"	3	3'- 9"	6	7'- 6"	5	4'- 3"	11	11'- 0"	11	8'- 3"	20	25'- 0"	9	4'- 6"	2
V	1'- 6"	14'- 6"	4'- 6"	27'- 0"	9'- 6"	10	10'- 0"	21	26'- 3"	13	9'- 9"	10	5'- 0"	3	3'- 0"	7	8'- 9"	5	4'- 9"	11	11'- 0"	11	8'- 3"	21	26'- 3"	11	5'- 6"	2
W	1'- 6"	15'- 0"	4'- 6"	28'- 0"	10'- 0"	11	11'- 0"	22	27'- 6"	13	9'- 9"	10	5'- 0"	3	3'- 6"	7	8'- 9"	6	5'- 3"	11	11'- 0"	11	8'- 3"	22	27'- 6"	13	6'- 6"	2
X	1'- 9"	15'- 6"	4'- 9"	29'- 0"	11'- 0"	11	11'- 0"	22	27'- 6"	13	9'- 9"	12	6'- 0"	4	4'- 0"	7	8'- 9"	7	6'- 3"	9	9'- 0"	15	11'- 3"	22	27'- 6"	13	6'- 6"	2
Y	2'- 0"	16'- 0"	4'- 9"	30'- 0"	12'- 0"	10	10'- 0"	23	28'- 9"	17	12'- 9"	10	5'- 0"	3	3'- 3"	8	10'- 0"	8	7'- 3"	9	9'- 0"	15	11'- 3"	23	28'- 9"	15	7'- 6"	3
Z	2'- 0"	16'- 6"	5'- 0"	31'- 0"	12'- 6"	10	10'- 0"	24	30'- 0"	17	12'- 9"	12	6'- 0"	3	3'- 9"	8	10'- 0"	8	7'- 9"	9	9'- 0"	15	11'- 3"	24	30'- 0"	17	8'- 6"	3
AA	2'- 0"	17'- 0"	5'- 0"	32'- 0"	13'- 0"	11	11'- 0"	25	31'- 3"	17	12'- 9"	12	6'- 0"	4	4'- 3"	8	10'- 0"	9	8'- 3"	10	10'- 0"	15	11'- 3"	25	31'- 3"	17	8'- 6"	3
BB	2'- 0"	17'- 6"	5'- 3"	33'- 0"	14'- 0"	12	12'- 0"	26	32'- 6"	17	12'- 9"	12	6'- 0"	4	4'- 9"	8	10'- 0"	10	9'- 3"	11	11'- 0"	15	11'- 3"	26	32'- 6"	17	8'- 6"	3
CC	2'- 0"	18'- 0"	5'- 3"	34'- 0"	14'- 6"	13	13'- 0"	26	32'- 6"	17	12'- 9"	12	6'- 0"	4	4'- 0"	9	11'- 3"	10	9'- 9"	12	12'- 0"	15	11'- 3"	26	32'- 6"	17	8'- 6"	3
DD	2'- 6"	18'- 6"	5'- 6"	35'- 0"	15'- 0"	12	12'- 0"	27	33'- 9"	17	12'- 9"	16	8'- 0"	4	4'- 6"	9	11'- 3"	11	10'- 3"	10	10'- 0"	19	14'- 3"	27	33'- 9"	17	8'- 6"	4
EE	2'- 6"	19'- 0"	5'- 6"	36'- 0"	15'- 6"	12	12'- 0"	28	35'- 0"	17	12'- 9"	18	9'- 0"	4	5'- 0"	9	11'- 3"	11	10'- 9"	11	11'- 0"	19	14'- 3"	28	35'- 0"	17	8'- 6"	4

Sheet 3 of 7

WING DETAILS

2:1 FILL SLOPE - TYPE I

VIRGINIA DEPARTMENT OF TRANSPORTATION

1006.17

STRUCTURE AND BRIDGE DIVISION

U.S. DEPARTMENT OF TRANSPORTATION
FEDERAL HIGHWAY ADMINISTRATION
EASTERN FEDERAL LANDS HIGHWAY DIVISION

DETAIL

BOX CULVERT
WING DETAIL
(TYPE I)

DETAIL APPROVED FOR USE --/----

REVISED:

DETAIL
604-C

10/24/2006 9:44:33 AM M:\Projects\vlfs\st_crol\nh66\008\proj_dev\Contract 2\details\boxwing2.dgn

REG	STATE	PROJECT	SHEET NO.	TOTAL SHEETS
SE	VI	NH - 66(008)	M52	193

BCW-21

WING	WF1 SIZE	WF1 LENGTH	WF2 SIZE	WF2 LENGTH From	WF2 LENGTH To	WF2 LENGTH Vary By	WF2 # Ea	WF3 SIZE	WF3 a From	WF3 a To	WF3 a Vary By	WF3 LENGTH From	WF3 LENGTH To	WF3 LENGTH Vary By	WF4 SIZE	WF4 LENGTH
A	4	6'- 6"	--	-----	-----	-----	--	4	3'- 6"	2'- 7 1/2"	0'- 1 3/4"	4'- 6"	3'- 7 1/2"	0'- 1 3/4"	4	6'- 7"
B	4	7'- 6"	--	-----	-----	-----	--	4	3'- 6"	2'- 7 1/2"	0'- 1 1/2"	4'- 6"	3'- 7 1/2"	0'- 1 1/2"	4	7'- 7"
C	4	8'- 6"	--	-----	-----	-----	--	4	3'- 6"	2'- 7"	0'- 1 3/8"	4'- 6"	3'- 7"	0'- 1 3/8"	4	8'- 7"
D	4	9'- 6"	--	-----	-----	-----	--	4	3'- 6"	2'- 6 3/4"	0'- 1 1/4"	4'- 6"	3'- 6 3/4"	0'- 1 1/4"	4	9'- 7"
E	4	10'- 6"	--	-----	-----	-----	--	4	3'- 6"	2'- 6 3/4"	0'- 1 1/8"	4'- 6"	3'- 6 3/4"	0'- 1 1/8"	4	10'- 7"
F	4	11'- 6"	--	-----	-----	-----	--	4	3'- 6"	2'- 7"	0'- 1"	4'- 6"	3'- 7"	0'- 1"	4	11'- 6"
G	4	12'- 6"	4	4'- 1"	-----	-----	2	4	4'- 0"	2'- 7 1/2"	0'- 1 3/8"	5'- 0"	3'- 7 1/2"	0'- 1 3/8"	4	12'- 7"
H	4	13'- 6"	4	6'- 9"	-----	-----	2	4	4'- 6"	2'- 7 1/4"	0'- 1 3/4"	5'- 6"	3'- 7 1/4"	0'- 1 3/4"	4	13'- 8"
I	4	14'- 6"	4	7'- 3"	-----	-----	2	4	4'- 6"	2'- 7 1/4"	0'- 1 5/8"	5'- 6"	3'- 7 1/4"	0'- 1 5/8"	4	14'- 8"
J	4	15'- 6"	4	9'- 4"	4'- 6 3/8"	4'- 9 5/8"	2	4	4'-11"	2'- 6 7/8"	0'- 1 7/8"	5'-11"	3'- 6 7/8"	0'- 1 7/8"	4	15'- 8"
K	4	16'- 6"	4	11'- 1"	3'-11 3/4"	3'- 6 5/8"	2	4	5'- 5"	2'- 7"	0'- 2 1/8"	6'- 5"	3'- 7"	0'- 2 1/8"	4	16'- 9"
L	4	17'- 6"	4	11'- 9"	4'- 2 3/4"	3'- 9 1/8"	2	4	5'- 5"	2'- 7"	0'- 2"	6'- 5"	3'- 7"	0'- 2"	4	17'- 9"
M	4	18'- 6"	4	13'- 4"	3'- 9 1/2"	4'- 9 1/4"	2	4	4'-11"	2'- 5 3/4"	0'- 2 1/4"	5'-11"	3'- 5 3/4"	0'- 2 1/4"	4	18'-10"
N	4	18'- 6"	4	13'- 4"	3'- 9 1/2"	4'- 9 1/4"	2	4	4'-11"	2'- 5 3/4"	0'- 2 1/4"	5'-11"	3'- 5 3/4"	0'- 2 1/4"	4	18'-10"
O	4	19'- 6"	4	14'- 9"	3'- 5 5/8"	3'- 9 1/8"	2	4	5'- 4"	2'- 6 3/4"	0'- 2 3/8"	6'- 4"	3'- 6 3/4"	0'- 2 3/8"	4	19'-11"
P	4	20'- 6"	4	16'- 1"	3'- 2 1/2"	4'- 3 1/2"	2	4	4'- 6"	2'- 6 3/8"	0'- 2 5/8"	5'- 6"	3'- 6 3/8"	0'- 2 5/8"	4	21'- 0"
Q	4	21'- 6"	4	16'-10"	3'- 4 3/4"	4'- 5 3/4"	2	4	4'- 7"	2'- 6"	0'- 2 1/2"	5'- 7"	3'- 6"	0'- 2 1/2"	4	21'-11"
R	4	22'- 6"	4	18'- 1"	3'- 2"	3'- 8 3/4"	2	4	4'-11"	2'- 6 1/8"	0'- 2 5/8"	5'-11"	3'- 6 1/8"	0'- 2 5/8"	4	23'- 0"
S	4	23'- 6"	4	19'- 4"	3'- 0"	4'- 1"	2	4	5'- 4"	2'- 7"	0'- 2 3/4"	6'- 4"	3'- 7"	0'- 2 3/4"	4	24'- 1"
T	4	24'- 6"	4	20'- 2"	3'- 1 1/2"	4'- 3 1/8"	2	4	4'- 6"	2'- 6 3/8"	0'- 2 5/8"	5'- 6"	3'- 6 3/8"	0'- 2 5/8"	4	25'- 1"
U	4	25'- 6"	4	21'- 5"	2'-11 3/4"	3'- 8 1/4"	2	4	5'- 1"	2'- 6 3/4"	0'- 2 3/4"	6'- 1"	3'- 6 3/4"	0'- 2 3/4"	4	26'- 2"
V	4	26'- 6"	4	22'- 7"	2'-10 1/8"	3'-11 3/8"	2	4	5'- 2"	2'- 6 3/8"	0'- 2 7/8"	6'- 2"	3'- 6 3/8"	0'- 2 7/8"	4	27'- 3"
W	4	27'- 6"	4	23'- 9"	2'- 8 1/4"	3'- 6 1/8"	2	4	5'- 4"	2'- 7"	0'- 3"	6'- 4"	3'- 7"	0'- 3"	4	28'- 4"
X	4	28'- 6"	4	25'- 1"	2'- 4 7/8"	3'- 2 7/8"	2	4	5'- 1"	2'- 6 5/8"	0'- 3 3/8"	6'- 1"	3'- 6 5/8"	0'- 3 3/8"	4	29'- 7"
Y	4	29'- 6"	4	26'- 5"	2'- 2"	3'- 3/8"	2	4	5'- 3"	2'- 6 3/8"	0'- 3 5/8"	6'- 3"	3'- 6 3/8"	0'- 3 5/8"	4	30'-10"
Z	4	30'- 6"	4	27'- 5"	2'- 2"	3'- 1 7/8"	2	4	5'- 4"	2'- 6 1/4"	0'- 3 3/4"	6'- 4"	3'- 6 1/4"	0'- 3 3/4"	4	31'-11"
AA	4	31'- 6"	4	28'- 6"	2'- 1 7/8"	2'-11 1/8"	2	4	5'- 8"	2'- 6 1/2"	0'- 3 3/4"	6'- 8"	3'- 6 1/2"	0'- 3 3/4"	4	33'- 0"
BB	4	32'- 6"	4	29'- 9"	1'-11 1/4"	2'- 9 3/8"	2	4	6'- 3"	2'- 7"	0'- 4"	7'- 3"	3'- 7"	0'- 4"	4	34'- 3"
CC	4	33'- 6"	4	30'- 9"	1'-10 3/4"	2'-10 5/8"	2	4	6'- 8"	2'- 6 1/2"	0'- 4 1/8"	7'- 8"	3'- 6 1/2"	0'- 4 1/8"	4	35'- 4"
DD	4	34'- 6"	4	31'-10"	1'-11 1/8"	2'- 8 5/8"	2	4	6'- 0"	2'- 6 3/4"	0'- 4 1/8"	7'- 0"	3'- 6 3/4"	0'- 4 1/8"	4	36'- 6"
EE	4	35'- 6"	4	32'-10"	1'-10 3/4"	2'- 9 3/4"	2	4	6'- 5"	2'- 6 1/4"	0'- 4 1/4"	7'- 5"	3'- 6 1/4"	0'- 4 1/4"	4	37'- 7"

Sheet 4 of 7

STRUCTURE AND BRIDGE DIVISION

WING DETAILS

2:1 FILL SLOPE - TYPE I

VIRGINIA DEPARTMENT OF TRANSPORTATION

1006.18

U.S. DEPARTMENT OF TRANSPORTATION
FEDERAL HIGHWAY ADMINISTRATION
EASTERN FEDERAL LANDS HIGHWAY DIVISION

DETAIL

BOX CULVERT
WING DETAIL
(TYPE I)

DETAIL APPROVED FOR USE --/----

REVISED:

DETAIL
604-C

10/24/2006 9:45:04 AM W:\Projects\vi\ls\st_crd\nh66\008\proj_dev\Contract 2\details\bcwing2.dgn

REG	STATE	PROJECT	SHEET NO.	TOTAL SHEETS
SE	VI	NH - 66(008)	M53	193

BCW-21

	WF5							WF6				WF7							WH1		WH3	
		a			LENGTH				LENGTH				a			LENGTH						
WING	SIZE	From	To	Vary By	From	To	Vary By	SIZE	From	To	Vary By	SIZE	From	To	Vary By	From	To	Vary By	SIZE	LENGTH	SIZE	LENGTH
A	--	-----	-----	-----	-----	-----	-----	4	3'- 6"	2'- 6¾"	0'- 2¼"	--	-----	-----	-----	-----	-----	-----	4	6'- 6"	4	6'-11"
B	--	-----	-----	-----	-----	-----	-----	4	3'- 6"	2'- 6"	0'- 2"	--	-----	-----	-----	-----	-----	-----	4	7'- 6"	4	8'- 1"
C	--	-----	-----	-----	-----	-----	-----	4	3'- 6"	2'- 7½"	0'- 1¾"	--	-----	-----	-----	-----	-----	-----	4	8'- 6"	4	9'- 1"
D	--	-----	-----	-----	-----	-----	-----	4	3'- 6"	2'- 7½"	0'- 1½"	--	-----	-----	-----	-----	-----	-----	4	9'- 6"	4	10'- 2"
E	--	-----	-----	-----	-----	-----	-----	4	3'- 6"	2'- 7"	0'- 1⅜"	--	-----	-----	-----	-----	-----	-----	4	10'- 6"	4	11'- 2"
F	--	-----	-----	-----	-----	-----	-----	4	3'- 6"	2'- 6¾"	0'- 1¼"	--	-----	-----	-----	-----	-----	-----	4	11'- 6"	4	12'- 4"
G	--	-----	-----	-----	-----	-----	-----	4	4'- 0"	2'- 6½"	0'- 1¾"	--	-----	-----	-----	-----	-----	-----	4	12'- 6"	4	13'- 4"
H	--	-----	-----	-----	-----	-----	-----	4	4'- 6"	2'- 7½"	0'- 2¼"	--	-----	-----	-----	-----	-----	-----	4	13'- 6"	4	14'- 5"
I	--	-----	-----	-----	-----	-----	-----	4	4'- 6"	2'- 8"	0'- 2"	--	-----	-----	-----	-----	-----	-----	4	14'- 6"	4	15'- 6"
J	--	-----	-----	-----	-----	-----	-----	4	4'-11"	2'- 8"	0'- 2¼"	--	-----	-----	-----	-----	-----	-----	4	15'- 6"	4	16'- 7"
K	--	-----	-----	-----	-----	-----	-----	4	5'- 5"	2'- 6⅞"	0'- 2⅝"	--	-----	-----	-----	-----	-----	-----	4	16'- 6"	4	17'- 7"
L	--	-----	-----	-----	-----	-----	-----	4	5'- 5"	2'- 6"	0'- 2½"	--	-----	-----	-----	-----	-----	-----	4	17'- 6"	4	18'- 9"
M	4	5'-11"	5'- 1¼"	0'- 1⅝"	6'-11"	6'- 1¼"	0'- 1⅝"	4	5'-11"	2'- 8½"	0'- 2¾"	--	-----	-----	-----	-----	-----	-----	4	18'- 6"	4	19'- 9"
N	4	5'-11"	5'- 1¼"	0'- 1⅝"	6'-11"	6'- 1¼"	0'- 1⅝"	4	5'-11"	2'- 8½"	0'- 2¾"	--	-----	-----	-----	-----	-----	-----	4	18'- 6"	4	19'- 9"
O	4	6'- 5"	5'- 6½"	0'- 1¾"	7'- 5'	6'- 6½"	0'- 1¾"	4	6'- 5"	2'- 8"	0'- 3"	--	-----	-----	-----	-----	-----	-----	4	19'- 6"	4	20'-10"
P	4	5'- 6"	4'- 8"	0'- 2"	6'- 6"	5'- 8"	0'- 2"	4	6'-11"	2'- 7"	0'- 3¼"	4	6'-11"	5'- 8'	0'- 1¼"	7'-11'	6'- 8"	0'- 1¼'	4	20'- 6"	4	21'-11"
Q	4	5'- 7"	4'- 9⅝"	0'- 1⅞"	6'- 7"	5'- 9⅝"	0'- 1⅞"	4	6'-11"	2'- 8"	0'- 3"	4	6'-11"	5'- 8'	0'- 1¼"	7'-11'	6'- 8"	0'- 1¼'	4	21'- 6"	4	23'- 0"
R	4	6'- 0"	5'- 2"	0'- 2"	7'- 0"	6'- 2"	0'- 2"	4	7'- 5"	2'- 6½"	0'- 3¼"	4	7'- 5'	6'- 2"	0'- 1¼"	8'- 5'	7'- 2"	0'- 1¼'	4	22'- 6"	4	24'- 0"
S	4	6'- 5"	5'- 6⅜"	0'- 2⅛"	7'- 5'	6'- 6⅜"	0'- 2⅛"	4	7'-11"	2'-10¼"	0'- 3⅜"	4	7'-11"	6'- 6½"	0'- 1⅜"	8'-11'	7'- 6½"	0'- 1⅜'	4	23'- 6"	4	25'- 2"
T	4	5'-11"	4'- 9"	0'- 2"	6'-11"	5'- 9"	0'- 2"	4	7'-11"	2'- 9¼"	0'- 3¼"	4	7'-11"	6'- 1¾"	0'- 1¼"	8'-11'	7'- 1¾'	0'- 1¼'	4	24'- 6"	4	26'- 2"
U	5	7'- 2¼"	5'- 4¼"	0'- 2"	8'- 4'	6'- 6"	0'- 2"	4	8'- 5"	2'- 7"	0'- 3½"	5	8'- 5¼"	7'- 4⅞"	0'- 1⅜"	9'- 7'	8'- 6⅝"	0'- 1⅜'	4	25'- 6"	4	27'- 3"
V	5	7'- 5¼"	5'- 5⅞"	0'- 2⅛"	8'- 7'	6'- 7⅝"	0'- 2⅛"	4	8'-11"	2'- 6⅞"	0'- 3⅝"	5	8'-11¼"	7'- 6¾"	0'- 1½"	10'- 1"	8'- 8½"	0'- 1½'	4	26'- 6"	4	28'- 3"
W	5	7'- 7¼"	5'- 6½"	0'- 2¼"	8'- 9'	6'- 8¼"	0'- 2¼"	4	9'- 5"	2'- 6½"	0'- 3¾"	5	9'- 5¼"	7'- 9¾"	0'- 1½"	10'- 7"	8'-11½"	0'- 1½'	4	27'- 6"	4	29'- 5"
X	5	8'- 5¼"	5'- 3¾"	0'- 2½"	9'- 7'	6'- 5½"	0'- 2½"	4	10'- 5"	2'-10¼"	0'- 4⅛"	5	10'- 5¼"	8'- 8⅛"	0'- 1⅝"	11'- 7'	9'- 9⅞"	0'- 1⅝'	4	28'- 6"	4	30'- 5"
Y	5	8'-11¼"	5'- 6"	0'- 2¾"	10'- 1"	6'- 7¾"	0'- 2¾"	4	11'- 5"	2'- 9½"	0'- 4½"	5	11'- 5¼"	9'- 1⅛"	0'- 1⅞"	12'- 7"	10'- 2⅞"	0'- 1⅞'	4	29'- 6"	4	31'- 6"
Z	5	9'- 1¼"	5'- 8"	0'- 2¾"	10'- 3"	6'- 9¾"	0'- 2¾"	4	11'-11"	2'- 8"	0'- 4⅝"	5	11'-11¼"	9'- 3⅜"	0'- 1⅞"	13'- 1"	10'- 5⅛"	0'- 1⅞'	4	30'- 6"	4	32'- 7"
AA	6	9'- 6½"	5'-11⅜"	0'- 2⅞"	10'-11"	7'- 3⅞"	0'- 2⅞"	4	12'- 5"	2'- 6¼"	0'- 4¾"	6	12'- 4½"	9'- 8⅝"	0'- 1⅞"	13'- 9"	11'- 1⅛"	0'- 1⅞'	4	31'- 6"	4	33'- 8"
BB	6	10'- 3½"	6'- 6½"	0'- 3"	11'- 8"	7'-11"	0'- 3"	4	13'- 5"	2'- 7"	0'- 5"	6	13'- 4½"	10'- 6½"	0'- 2"	14'- 9"	11'-11"	0'- 2"	4	32'- 6"	4	34'- 8"
CC	6	10'- 9½"	7'- ½"	0'- 3"	12'- 2"	8'- 5"	0'- 3"	4	13'-11"	2'- 9¾"	0'- 5⅛"	6	13'-10½"	11'- ½"	0'- 2"	15'- 3'	12'- 5"	0'- 2"	4	33'- 6"	4	35'-10"
DD	6	11'- 2½"	6'- 3⅛"	0'- 3⅛"	12'- 7"	7'- 7⅝"	0'- 3⅛"	4	14'- 5"	2'-10⅝"	0'- 5⅛"	6	14'- 4½"	11'- 6½'	0'- 2"	15'- 9'	12'-11"	0'- 2"	4	34'- 6"	4	36'-10"
EE	6	11'- 8½"	6'- 9⅛"	0'- 3⅛"	13'- 1"	8'- 1⅝"	0'- 3⅛"	4	14'-11"	2'- 8"	0'- 5¼"	6	14'-10½"	11'-10⅜"	0'- 2⅛"	16'- 3"	13'- 2⅞"	0'- 2⅛'	4	35'- 6"	4	37'-11"

Sheet 5 of 7

WING DETAILS

2:1 FILL SLOPE - TYPE I

VIRGINIA DEPARTMENT OF TRANSPORTATION

1006.19

STRUCTURE AND BRIDGE DIVISION

U.S. DEPARTMENT OF TRANSPORTATION
FEDERAL HIGHWAY ADMINISTRATION
EASTERN FEDERAL LANDS HIGHWAY DIVISION

DETAIL

BOX CULVERT
WING DETAIL
(TYPE I)

DETAIL APPROVED FOR USE --/----

REVISED:

DETAIL
604-C

10/24/2006 9:45:34 AM M:\Projects\ITS\st_crd\VH66\008\proj_dev\Contract 2\details\boxwing2.dgn

REG	STATE	PROJECT	SHEET NO.	TOTAL SHEETS
SE	VI	NH - 66(008)	M54	193

BCW-21

WING	WH2					WV1							WV2			
		LENGTH					a			LENGTH				LENGTH		
	SIZE	From	To	Vary By	* Ea	SIZE	From	To	Vary By	From	To	Vary By	SIZE	From	To	Vary By
A	4	6'- 0"	2'- 7 7/8"	3'- 4 1/8"	2	4	5'- 1/4"	2'- 9 1/4"	0'- 4 1/2"	7'- 0"	4'- 9"	0'- 4 1/2"	4	5'- 0"	2'- 7 7/8"	0'- 5 5/8"
B	4	5'- 9"	2'- 6 1/2"	3'- 2 1/2"	2	4	5'- 6 1/4"	2'- 9"	0'- 4 3/4"	7'- 6"	4'- 8 3/4"	0'- 4 3/4"	4	5'- 6"	2'- 6 3/4"	0'- 5 7/8"
C	4	6'- 0"	2'- 7 3/4"	3'- 4 1/4"	2	4	6'- 1/4"	3'- 1/4"	0'- 4 1/2"	8'- 0"	5'- 0"	0'- 4 1/2"	4	6'- 0"	3'- 2 1/4"	0'- 5 5/8"
D	4	9'- 1"	2'- 6 1/2"	3'- 3 1/4"	2	4	6'- 6 1/4"	3'- 5/8"	0'- 4 5/8"	8'- 6"	5'- 3/8"	0'- 4 5/8"	4	6'- 6"	3'- 1 3/4"	0'- 5 3/4"
E	4	9'- 4"	2'- 7 3/4"	3'- 4 1/8"	2	4	7'- 1/4"	3'- 3 1/4"	0'- 4 1/2"	9'- 0"	5'- 3"	0'- 4 1/2"	4	7'- 0"	3'- 3"	0'- 5 5/8"
F	4	9'- 1"	2'- 6 3/4"	3'- 3 1/8"	2	4	7'- 6 1/4"	3'- 3 3/8"	0'- 4 5/8"	9'- 6"	5'- 3 1/8"	0'- 4 5/8"	4	7'- 6"	3'- 2 1/4"	0'- 5 3/4"
G	4	9'- 4"	2'- 7 1/2"	3'- 4 1/4"	2	4	8'- 1/4"	3'- 6 1/4'	0'- 4 1/2"	10'- 0"	5'- 6"	0'- 4 1/2"	4	8'- 0"	3'- 3 3/4"	0'- 5 5/8"
H	4	12'- 5"	2'- 6 7/8"	3'- 3 3/8"	2	4	8'- 6 1/4"	3'- 6 1/8'	0'- 4 5/8"	10'- 6"	5'- 5 7/8"	0'- 4 5/8"	4	8'- 6"	3'- 8 1/2"	0'- 5 3/4"
I	4	12'- 8"	2'- 7 5/8"	3'- 4 1/8"	2	4	9'- 1/4"	3'- 9 1/4"	0'- 4 1/2"	11'- 0"	5'- 9"	0'- 4 1/2"	4	9'- 0"	3'-10 1/8"	0'- 5 5/8"
J	4	12'- 5"	2'- 6 7/8"	3'- 3 3/8"	2	4	9'- 6 1/4"	3'- 8 7/8"	0'- 4 5/8"	11'- 6"	5'- 8 5/8"	0'- 4 5/8"	4	9'- 6"	3'- 9"	0'- 5 3/4"
K	4	16'- 0"	2'- 7 1/2"	3'- 4 1/8"	2	4	10'- 1/4'	4'- 1/4"	0'- 4 1/2"	12'- 0"	6'- 0'	0'- 4 1/2"	4	10'- 0"	3'-10 7/8"	0'- 5 5/8"
L	4	15'- 9"	2'- 7"	3'- 3 1/2"	2	4	8'- 4 1/4"	3'-10 1/4"	0'- 4 1/2"	10'- 4"	5'-10"	0'- 4 1/2"	4	10'- 6"	3'- 9 1/2"	0'- 5 3/4"
M	4	16'- 0"	2'- 7 1/2"	3'- 4 1/8"	2	4	8'-11 1/4"	4'- 3/4"	0'- 4 1/2"	10'-11"	6'- 1/2"	0'- 4 1/2"	4	11'- 0"	4'- 5 1/4"	0'- 5 5/8"
N	4	16'- 0"	2'- 7 1/2"	3'- 4 1/8"	2	4	8'- 5 1/4"	4'- 8 1/4"	0'- 4 1/2"	10'- 5"	6'- 8"	0'- 4 1/2"	4	11'- 6"	4'-11 1/4"	0'- 5 5/8"
O	4	19'- 1"	2'- 6 7/8"	3'- 3 5/8"	2	4	8'-10 1/4"	4'- 8 3/4"	0'- 4 1/2"	10'-10"	6'- 8 1/2"	0'- 4 1/2"	4	12'- 0"	4'- 9 3/4"	0'- 5 3/4"
P	4	19'- 4"	2'- 7 3/8"	3'- 4 1/8"	2	4	7'-10 1/4"	4'-10 1/4"	0'- 4 1/2"	9'-10"	6'-10"	0'- 4 1/2"	4	12'- 6"	5'- 0'	0'- 5 5/8"
Q	4	19'- 1"	2'- 6 7/8"	3'- 3 5/8"	2	4	8'- 3 1/4"	4'- 9 5/8"	0'- 4 5/8"	10'- 3"	6'- 9 3/8"	0'- 4 5/8"	4	13'- 0"	4'-10 1/4"	0'- 5 3/4"
R	4	19'- 4"	2'- 7 3/8"	3'- 4 1/8"	2	4	8'-10 1/4"	5'- 1 1/4"	0'- 4 1/2"	10'-10"	7'- 1"	0'- 4 1/2"	4	13'- 6"	5'- 3/4"	0'- 5 5/8"
S	4	22'- 5"	2'- 7 1/4"	3'- 3 5/8"	2	4	9'- 3 1/4"	5'- 3/8"	0'- 4 5/8"	11'- 3"	7'- 1/8"	0'- 4 5/8"	4	14'- 0"	5'- 4 1/2"	0'- 5 3/4"
T	4	22'- 8"	2'- 7 1/4"	3'- 4 1/8"	2	4	9'- 9 1/4"	5'- 3 1/4"	0'- 4 1/2"	11'- 9"	7'- 3"	0'- 4 1/2"	4	14'- 6"	5'- 7 1/8"	0'- 5 5/8"
U	4	22'- 5"	2'- 7 1/4"	3'- 3 5/8"	2	4	9'-10 1/4"	5'- 4 1/4"	0'- 4 1/2"	11'-10"	7'- 4"	0'- 4 1/2"	4	15'- 0"	5'- 5"	0'- 5 3/4"
V	4	26'- 0"	2'- 7 1/8"	3'- 4 1/8"	2	4	9'- 4 1/4"	5'- 7 1/4"	0'- 4 1/2"	11'- 4"	7'- 7"	0'- 4 1/2"	4	15'- 6"	5'- 7 1/8"	0'- 5 5/8"
W	4	25'- 9"	2'- 6 3/4"	3'- 3 3/4"	2	4	9'- 9 1/4"	5'- 6 3/8'	0'- 4 5/8"	11'- 9"	7'- 6 1/8"	0'- 4 5/8"	4	16'- 0"	5'- 5 1/2"	0'- 5 3/4"
X	4	26'- 0"	2'- 7 1/8"	3'- 4 1/8"	2	4	10'- 2 1/4"	6'- 3/4"	0'- 4 1/2"	12'- 2"	8'- 1/2"	0'- 4 1/2"	4	16'- 9"	6'- 5 1/4"	0'- 5 5/8"
Y	4	29'- 1"	2'- 7"	3'- 3 3/4"	2	4	10'- 1 1/4"	6'- 4 1/4'	0'- 4 1/2"	12'- 1"	8'- 4"	0'- 4 1/2"	4	17'- 6"	6'- 8 5/8"	0'- 5 5/8"
Z	4	29'- 4"	2'- 7"	3'- 4 1/8"	2	4	10'- 4 1/4"	6'- 7 1/4'	0'- 4 1/2"	12'- 4"	8'- 7"	0'- 4 1/2"	4	18'- 0"	6'- 9"	0'- 5 5/8"
AA	4	29'- 1"	2'- 7"	3'- 3 3/4"	2	5	10'- 8 3/4"	6'- 7 1/4'	0'- 4 1/2"	12'- 9"	8'- 7 1/2"	0'- 4 1/2"	4	18'- 6"	6'- 9 3/8"	0'- 5 5/8"
BB	4	29'- 4"	2'- 7"	3'- 4 1/8"	2	5	11'- 3 3/4"	6'- 9 3/4'	0'- 4 1/2"	13'- 4"	8'-10"	0'- 4 1/2"	4	19'- 0"	6'- 9 3/4"	0'- 5 5/8"
CC	4	32'- 5"	2'- 7 1/4"	3'- 3 3/4"	2	5	11'- 8 3/4"	6'-10 1/4"	0'- 4 1/2"	13'- 9"	8'-10 1/2"	0'- 4 1/2"	4	19'- 6"	7'- 3 3/4"	0'- 5 5/8"
DD	4	32'- 8"	2'- 8"	3'- 4"	2	5	12'- 3/4"	7'- 6 3/4'	0'- 4 1/2"	14'- 1"	9'- 7"	0'- 4 1/2"	4	20'- 6"	7'-10 1/8"	0'- 5 5/8"
EE	4	32'- 5"	2'- 7 1/4"	3'- 3 3/4"	2	5	12'- 1 3/4"	7'- 6 1/4'	0'- 4 5/8"	14'- 2"	9'- 6 1/2"	0'- 4 5/8"	4	21'- 0"	7'-10 1/2"	0'- 5 5/8"

Sheet 6 of 7

STRUCTURE AND BRIDGE DIVISION

WING DETAILS

2:1 FILL SLOPE - TYPE I

VIRGINIA DEPARTMENT OF TRANSPORTATION

1006.20

U.S. DEPARTMENT OF TRANSPORTATION
FEDERAL HIGHWAY ADMINISTRATION
EASTERN FEDERAL LANDS HIGHWAY DIVISION

DETAIL

BOX CULVERT
WING DETAIL
(TYPE I)

DETAIL APPROVED FOR USE --/----

REVISED:

DETAIL
604-C

10/24/2006 9:46:18 AM M:\Projects\vlfs\st_prot\nh66(008)\proj_dev\Contract 2\details\boxwing2.dgn

REG	STATE	PROJECT	SHEET NO.	TOTAL SHEETS
SE	VI	NH - 66(008)	M55	193

BCW-21

	WV3							WV4						
		a			LENGTH				a			LENGTH		
WING	SIZE	From	To	Vary By	From	To	Vary By	SIZE	From	To	Vary By	From	To	Vary By
A	--	-----	-----	-----	-----	-----	-----	--	-----	-----	-----	-----	-----	-----
B	--	-----	-----	-----	-----	-----	-----	--	-----	-----	-----	-----	-----	-----
C	--	-----	-----	-----	-----	-----	-----	--	-----	-----	-----	-----	-----	-----
D	--	-----	-----	-----	-----	-----	-----	--	-----	-----	-----	-----	-----	-----
E	--	-----	-----	-----	-----	-----	-----	--	-----	-----	-----	-----	-----	-----
F	--	-----	-----	-----	-----	-----	-----	--	-----	-----	-----	-----	-----	-----
G	--	-----	-----	-----	-----	-----	-----	--	-----	-----	-----	-----	-----	-----
H	--	-----	-----	-----	-----	-----	-----	--	-----	-----	-----	-----	-----	-----
I	--	-----	-----	-----	-----	-----	-----	--	-----	-----	-----	-----	-----	-----
J	--	-----	-----	-----	-----	-----	-----	--	-----	-----	-----	-----	-----	-----
K	--	-----	-----	-----	-----	-----	-----	--	-----	-----	-----	-----	-----	-----
L	4	10'- 6 1/4"	8'- 9 1/4"	0'- 3 1/2"	12'- 6"	10'- 9"	0'- 3 1/2"	--	-----	-----	-----	-----	-----	-----
M	4	11'- 1/4"	9'- 3 1/4"	0'- 3 1/2"	13'- 0"	11'- 3"	0'- 3 1/2"	--	-----	-----	-----	-----	-----	-----
N	4	10'- 5 1/4"	8'- 9"	0'- 3 3/8"	12'- 5"	10'- 8 3/4"	0'- 3 3/8"	4	11'- 6 1/4"	10'- 8 3/4"	0'- 2 3/8"	13'- 6"	12'- 8 1/2"	0'- 2 3/8"
O	4	10'-11 1/4"	9'- 3"	0'- 3 3/8"	12'-11"	11'- 2 3/4"	0'- 3 3/8"	4	12'- 1/4"	11'- 2 3/4"	0'- 2 3/8"	14'- 0"	13'- 2 1/2"	0'- 2 3/8"
P	4	10'- 8 1/4"	8'- 1 7/8"	0'- 3 3/8"	12'- 8"	10'- 1 5/8"	0'- 3 3/8"	4	12'- 6 1/4"	11'- 1/4"	0'- 2 1/4"	14'- 6"	13'- 0"	0'- 2 1/4"
Q	4	11'- 2 1/4"	8'- 7 7/8"	0'- 3 3/8"	13'- 2"	10'- 7 5/8"	0'- 3 3/8"	4	13'- 1/4"	11'- 5 1/4"	0'- 2 3/8"	15'- 0"	13'- 5"	0'- 2 3/8"
R	5	11'- 8 3/4"	9'- 2 3/8"	0'- 3 3/8"	13'- 9"	11'- 2 5/8"	0'- 3 3/8"	5	13'- 5 3/4"	11'-11 3/4"	0'- 2 1/4"	15'- 6"	14'- 0"	0'- 2 1/4"
S	5	12'- 1 3/4"	9'- 7 3/8"	0'- 3 3/8"	14'- 2"	11'- 7 5/8"	0'- 3 3/8"	5	13'-11 3/4"	12'- 5 3/4"	0'- 2 1/4"	16'- 0"	14'- 6"	0'- 2 1/4"
T	5	12'- 8 3/4"	10'- 2 3/8"	0'- 3 3/8"	14'- 9"	12'- 2 5/8"	0'- 3 3/8"	5	14'- 5 3/4"	12'-11 3/4"	0'- 2 1/4"	16'- 6"	15'- 0"	0'- 2 1/4"
U	5	12'- 9 3/4"	10'- 3 3/8"	0'- 3 3/8"	14'-10"	12'- 3 5/8"	0'- 3 3/8"	5	14'-11 3/4"	13'- 1 1/4"	0'- 2 1/4"	17'- 0"	15'- 1 1/2"	0'- 2 1/4"
V	6	13'- 3 5/8"	9'- 7 3/4"	0'- 3 3/8"	15'- 5"	11'- 9 1/8"	0'- 3 3/8"	6	15'- 5 5/8"	13'- 7 1/8"	0'- 2 1/4"	17'- 7"	15'- 8 1/2"	0'- 2 1/4"
W	6	13'- 9 5/8"	10'- 1 3/4"	0'- 3 3/8"	15'-11"	12'- 3 1/8"	0'- 3 3/8"	6	15'-11 5/8"	14'- 1 1/8"	0'- 2 1/4"	18'- 1"	16'- 2 1/2"	0'- 2 1/4"
X	6	14'- 2 5/8"	10'- 6 3/4"	0'- 3 3/8"	16'- 4"	12'- 8 1/8"	0'- 3 3/8"	6	16'- 8 5/8"	14'- 5 5/8"	0'- 2 1/4"	18'-10"	16'- 7"	0'- 2 1/4"
Y	6	15'- 3 5/8"	10'- 6 1/4"	0'- 3 3/8"	17'- 5"	12'- 7 5/8"	0'- 3 3/8"	6	17'- 5 5/8"	15'- 7 1/8"	0'- 2 1/4"	19'- 7"	17'- 8 1/2"	0'- 2 1/4"
Z	6	15'- 5 5/8"	10'- 8 1/4"	0'- 3 3/8"	17'- 7"	12'- 9 5/8"	0'- 3 3/8"	6	17'-11 5/8"	15'- 8 5/8"	0'- 2 1/4"	20'- 1"	17'-10"	0'- 2 1/4"
AA	7	15'-11 5/8"	11'- 2 1/4"	0'- 3 3/8"	18'- 2"	13'- 4 5/8"	0'- 3 3/8"	7	18'- 5 5/8"	16'- 2 5/8"	0'- 2 1/4"	20'- 8"	18'- 5"	0'- 2 1/4"
BB	7	16'- 5 5/8"	11'- 8 1/4"	0'- 3 3/8"	18'- 8"	13'-10 5/8"	0'- 3 3/8"	7	18'-11 5/8"	16'- 8 5/8"	0'- 2 1/4"	21'- 2"	18'-11"	0'- 2 1/4"
CC	7	16'-11 5/8"	12'- 2 1/4"	0'- 3 3/8"	19'- 2"	14'- 4 5/8"	0'- 3 3/8"	7	19'- 5 5/8"	17'- 2 5/8"	0'- 2 1/4"	21'- 8"	19'- 5"	0'- 2 1/4"
DD	7	17'- 2 5/8"	12'- 5 1/4"	0'- 3 3/8"	19'- 5"	14'- 7 5/8"	0'- 3 3/8"	7	20'- 5 5/8"	17'- 5 5/8"	0'- 2 1/4"	22'- 8"	19'- 8"	0'- 2 1/4"
EE	7	17'- 3 5/8"	12'- 6 1/4"	0'- 3 3/8"	19'- 6"	14'- 8 5/8"	0'- 3 3/8"	8	20'-11 1/2"	17'- 7"	0'- 2 1/4"	23'- 3"	19'-10 1/2"	0'- 2 1/4"

Sheet 7 of 7

WING DETAILS

2:1 FILL SLOPE - TYPE I

VIRGINIA DEPARTMENT OF TRANSPORTATION

1006.21

STRUCTURE AND BRIDGE DIVISION

U.S. DEPARTMENT OF TRANSPORTATION
FEDERAL HIGHWAY ADMINISTRATION
EASTERN FEDERAL LANDS HIGHWAY DIVISION

DETAIL

BOX CULVERT
WING DETAIL
(TYPE I)

DETAIL APPROVED FOR USE --/----

REVISED:

DETAIL
604-C

10/24/2006 9:46:59 AM M:\Projects\VI\St_crok\nh66(008)pro_dev\Contract 2\details\boxwing2.dgn

REG	STATE	PROJECT	SHEET NO.	TOTAL SHEETS
SE	VI	NH - 66(008)	M56	193

BCW-22

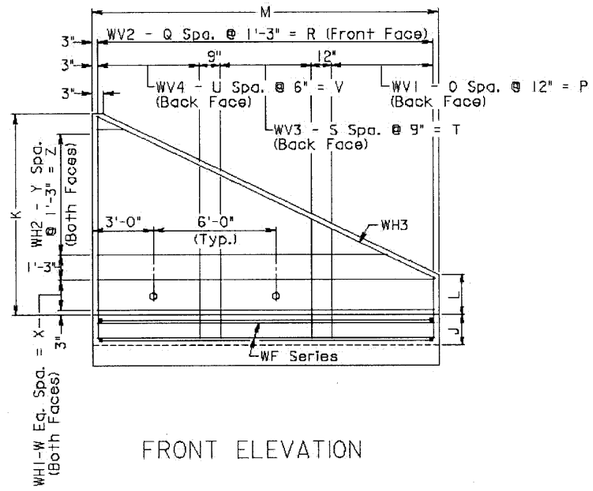

FRONT ELEVATION

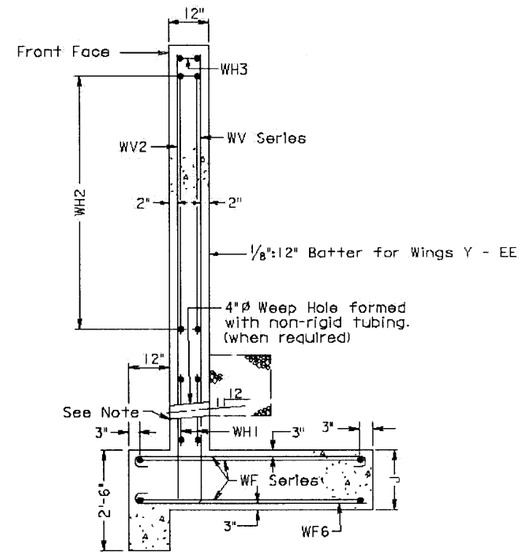

END VIEW

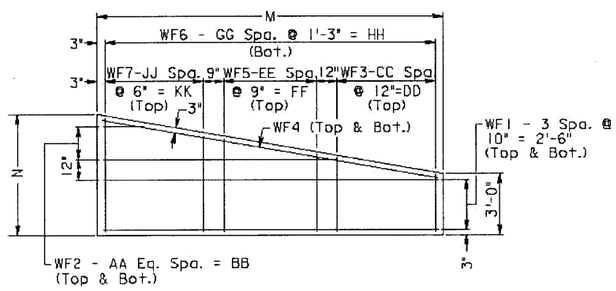

FOOTING PLAN

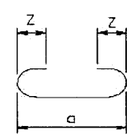

WF3, WF5, WF7

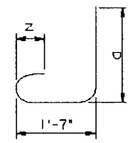

WV1, WV3, WV4

TABLE B		
Bar Size	Pin Dia.	Z
#3	2¼"	4"
#4	3"	4½"
#5	3¾"	5"
#6	4½"	6"
#7	5¼"	7"
#8	6"	8"
#9	9"	10⅛"

TABLE C	
Bar Size	Splice Length
#4	1'- 4"
#5	1'- 8"
#6	1'-11"
#7	2'- 4"
#8	3'- 1"
#9	3'-11"

Sheet 1 of 7

WING DETAILS

2:1 FILL SLOPE - TYPE II

VIRGINIA DEPARTMENT OF TRANSPORTATION

1006.22

STRUCTURE AND BRIDGE DIVISION

U.S. DEPARTMENT OF TRANSPORTATION
FEDERAL HIGHWAY ADMINISTRATION
EASTERN FEDERAL LANDS HIGHWAY DIVISION

DETAIL

BOX CULVERT
WING DETAIL
(TYPE II)

DETAIL APPROVED FOR USE --/----

REVISED:

DETAIL
604-D

10/24/2006 9:42:57 AM N:\Projects\vlts\st_crolx\nh66(008)\proj_dev\Contract 2\details\boxwing2.dgn

REG	STATE	PROJECT	SHEET NO.	TOTAL SHEETS
SE	VI	NH - 66(008)	M57	193

BCW-22

GENERAL NOTE

Specifications:

Construction - Va. Department of Transportation Road and Bridge Specifications, 1991.
Design - AASHTO Standard Specifications for Highway Bridges, 1983, including Interim Specifications, 1984. 1985 and VDOT Modifications, using Load Factor Design.

All concrete shall be Class A4.

Deformed reinforcing bars shall conform to ASTM A615, Grade 60. All reinforcing bar dimensions on the detailed drawing are to centers of bars except where otherwise noted and are subject to fabrication and construction tolerances.

Dimensions on bar diagrams are out-to-out of bars. Bars are straight unless otherwise shown.

The centers of main reinforcing bars shall be 2" from the face of the concrete unless otherwise shown.

At the Contractor's option, WV Series bars may be spliced at the top of footing in order to facilitate construction. Splice lengths shall be in accordance with TABLE C. No additional compensation shall be provided for the increase in reinforcing steel quantity due to the splices.

When concrete protective coating is required, all steel shall be epoxy-coated.

Bearing capacity of foundations shall be 1.5 Tons/Sq. Ft. minimum for wings A - X and 2 Tons/Sq. Ft. minimum for wings Y - EE.

Weepholes shall be placed at lowest point feasible for free drainage away from wing.

Four Type I Wings are to be used for straight crossings and skews up to 20°. Two Type I & two Type II Wings are to be used for skews from 25° to 45°. For skews above 45°, special design wings are required. The wingwall to be used for each culvert is shown on the BC series sheets.

The designs shown are applicable for a 45° skew with the roadway and other conditions indicated. Any change in these conditions invalidates these designs.

Quantities shown are for one wing.

WING	Quantity (One Wing) Concrete Cu. Yd.	Reinforcing Steel Lbs.
A	2.917	182.454
B	3.499	233.188
C	3.939	252.894
D	4.573	286.711
E	5.233	341.981
F	6.145	383.724
G	6.881	445.681
H	7.910	489.811
I	8.512	517.004
J	9.643	613.342
K	10.529	655.405
L	11.777	771.234
M	13.099	837.992
N	14.106	919.335
O	15.275	1017.802
P	16.355	1093.189
Q	17.891	1292.357
R	19.035	1525.633
S	20.691	1704.239
T	21.910	1952.852
U	23.368	2116.654
V	24.678	2112.153
W	28.412	2270.223
X	32.434	3904.347
Y	35.972	2730.572
Z	37.707	2849.343
AA	39.857	3392.164
BB	42.547	3594.334
CC	46.155	4755.614
DD	49.940	5500.464
EE	51.922	6808.705

Sheet 2 of 7

STRUCTURE AND BRIDGE DIVISION

WING DETAILS

2:1 FILL SLOPE - TYPE II

VIRGINIA DEPARTMENT OF TRANSPORTATION

1006.23

U.S. DEPARTMENT OF TRANSPORTATION
FEDERAL HIGHWAY ADMINISTRATION
EASTERN FEDERAL LANDS HIGHWAY DIVISION

DETAIL

BOX CULVERT
WING DETAIL
(TYPE II)

DETAIL APPROVED FOR USE --/----

REVISED:

DETAIL
604-D

10/24/2006 9:43:36 AM M:\Projects\vils\st_croix\nh66(008)\proj_dev\Contract 2\details\boxwing2.dgn

REG	STATE	PROJECT	SHEET NO.	TOTAL SHEETS
SE	VI	NH - 66(008)	M58	193

BCW-22

	DIMENSIONS					BAR SPACINGS																								NO. WEEP HOLES
						WV1		WV2		WV3		WV4		WH1		WH2		WF2		WF3		WF5		WF6		WF7			
WING	J	K	L	M	N	O	P	Q	R	S	T	U	V	W	X	Y	Z	AA	BB	CC	DD	EE	FF	GG	HH	JJ	KK		
A	1'- 6"	4'- 0"	1'- 0"	9'- 0"	4'- 0"	8	8'- 0"	6	7'- 6"	--	-----	--	-----	--	-----	1	1'- 3"	--	-----	8	8'- 0"	--	-----	6	7'- 6"	--	-----	--
B	1'- 6"	4'- 6"	1'- 0"	10'- 6"	4'- 0"	10	10'- 0"	8	10'- 0"	--	-----	--	-----	1	0'- 6"	1	1'- 3"	--	-----	10	10'- 0"	--	-----	8	10'- 0"	--	-----	--
C	1'- 6"	5'- 0"	1'- 0"	11'- 6"	4'- 0"	11	11'- 0"	8	10'- 0"	--	-----	--	-----	--	-----	2	2'- 6"	--	-----	11	11'- 0"	--	-----	8	10'- 0"	--	-----	--
D	1'- 6"	5'- 6"	1'- 0"	13'- 0"	4'- 0"	12	12'- 0"	10	12'- 6"	--	-----	--	-----	--	-----	2	2'- 6"	--	-----	12	12'- 0"	--	-----	10	12'- 6"	--	-----	--
E	1'- 6"	6'- 0"	1'- 0"	14'- 6"	4'- 0"	14	14'- 0"	11	13'- 9"	--	-----	--	-----	--	-----	3	3'- 9"	--	-----	14	14'- 0"	--	-----	11	13'- 9"	--	-----	--
F	1'- 6"	6'- 6"	1'- 0"	16'- 0"	4'- 6"	15	15'- 0"	12	15'- 0"	--	-----	--	-----	--	-----	3	3'- 9"	--	-----	15	15'- 0"	--	-----	12	15'- 0"	--	-----	--
G	1'- 6"	7'- 0"	1'- 0"	17'- 6"	4'- 6"	17	17'- 0"	13	16'- 3"	--	-----	--	-----	1	0'- 6"	3	3'- 9"	--	-----	17	17'- 0"	--	-----	13	16'- 3"	--	-----	--
H	1'- 6"	7'- 6"	1'- 0"	19'- 0"	5'- 0"	18	18'- 0"	14	17'- 6"	--	-----	--	-----	--	-----	4	5'- 0"	--	-----	18	18'- 0"	--	-----	14	17'- 6"	--	-----	--
I	1'- 6"	8'- 0"	1'- 0"	20'- 0"	5'- 0"	19	19'- 0"	15	18'- 9"	--	-----	--	-----	--	-----	4	5'- 0"	--	-----	19	19'- 0"	--	-----	15	18'- 9"	--	-----	--
J	1'- 6"	8'- 6"	1'- 0"	21'- 6"	5'- 6"	21	21'- 0"	16	20'- 0"	--	-----	--	-----	--	-----	5	6'- 3"	1	0'- 9"	21	21'- 0"	--	-----	16	20'- 0"	--	-----	--
K	1'- 6"	9'- 0"	1'- 0"	23'- 0"	5'- 6"	22	22'- 0"	18	22'- 6"	--	-----	--	-----	--	-----	5	6'- 3"	1	0'- 9"	22	22'- 0"	--	-----	18	22'- 6"	--	-----	--
L	1'- 6"	9'- 6"	1'- 0"	24'- 6"	6'- 0"	17	17'- 0"	19	23'- 9"	8	6'- 0"	--	-----	1	0'- 6"	5	6'- 3"	2	1'- 3"	24	24'- 0"	--	-----	19	23'- 9"	--	-----	--
M	1'- 6"	10'- 0"	1'- 0"	26'- 0"	6'- 6"	17	17'- 0"	20	25'- 0"	10	7'- 6"	--	-----	--	-----	6	7'- 6"	2	1'- 9"	20	20'- 0"	6	4'- 6"	20	25'- 0"	--	-----	2
N	1'- 6"	10'- 6"	1'- 0"	27'- 6"	6'- 6"	12	12'- 0"	21	26'- 3"	13	9'- 9"	7	3'- 6"	--	-----	6	7'- 6"	2	1'- 9"	22	22'- 0"	5	3'- 9"	21	26'- 3"	--	-----	2
O	1'- 6"	11'- 0"	1'- 0"	28'- 6"	7'- 0"	13	13'- 0"	22	27'- 6"	13	9'- 9"	7	3'- 6"	--	-----	7	8'- 9"	3	2'- 3"	23	23'- 0"	5	3'- 9"	22	27'- 6"	--	-----	2
P	1'- 6"	11'- 6"	1'- 0"	30'- 0"	7'- 0"	15	15'- 0"	23	28'- 9"	13	9'- 9"	6	3'- 0"	--	-----	7	8'- 9"	3	2'- 3"	17	17'- 0"	9	6'- 9"	23	28'- 9"	8	4'- 0"	3
Q	1'- 6"	12'- 0"	1'- 0"	31'- 6"	7'- 6"	15	15'- 0"	24	30'- 0"	13	9'- 9"	9	4'- 6"	1	0'- 6"	7	8'- 9"	3	2'- 9"	18	18'- 0"	9	6'- 9"	24	30'- 0"	9	4'- 6"	3
R	1'- 6"	12'- 6"	1'- 0"	33'- 0"	7'- 6"	15	15'- 0"	26	32'- 6"	13	9'- 9"	12	6'- 0"	--	-----	8	10'- 0"	3	2'- 9"	19	19'- 0"	9	6'- 9"	26	32'- 6"	10	5'- 0"	3
S	1'- 6"	13'- 0"	1'- 0"	34'- 6"	8'- 0"	15	15'- 0"	27	33'- 9"	13	9'- 9"	15	7'- 6"	--	-----	8	10'- 0"	4	3'- 3"	19	19'- 0"	9	6'- 9"	27	33'- 9"	13	6'- 6"	3
T	1'- 6"	13'- 6"	1'- 0"	36'- 0"	8'- 0"	14	14'- 0"	28	35'- 0"	15	11'- 3"	17	8'- 6"	--	-----	9	11'- 3"	4	3'- 3"	19	19'- 0"	11	8'- 3"	28	35'- 0"	13	6'- 6"	4
U	1'- 6"	14'- 0"	1'- 0"	37'- 0"	8'- 6"	14	14'- 0"	29	36'- 3"	17	12'- 9"	16	8'- 0"	--	-----	9	11'- 3"	4	3'- 9"	19	19'- 0"	13	9'- 9"	29	36'- 3"	12	6'- 0"	4
V	1'- 6"	14'- 6"	1'- 0"	38'- 6"	8'- 6"	15	15'- 0"	30	37'- 6"	17	12'- 9"	17	8'- 6"	1	0'- 6"	9	11'- 3"	4	3'- 9"	20	20'- 0"	13	9'- 9"	30	37'- 6"	13	6'- 6"	4
W	1'- 9"	15'- 0"	1'- 0"	40'- 0"	9'- 0"	15	15'- 0"	31	38'- 9"	19	14'- 3"	17	8'- 6"	--	-----	10	12'- 6"	5	4'- 3"	20	20'- 0"	15	11'- 3"	31	38'- 9"	13	6'- 6"	5
X	2'- 0"	15'- 6"	1'- 0"	41'- 6"	9'- 6"	17	17'- 0"	32	40'- 0"	17	12'- 9"	19	9'- 6"	--	-----	10	12'- 6"	5	4'- 9"	20	20'- 0"	17	12'- 9"	32	40'- 0"	13	6'- 6"	5
Y	2'- 0"	16'- 0"	1'- 0"	43'- 0"	10'- 0"	20	20'- 0"	34	42'- 6"	15	11'- 3"	19	9'- 6"	--	-----	11	13'- 9"	6	5'- 3"	18	18'- 0"	19	14'- 3"	34	42'- 6"	17	8'- 6"	5
Z	2'- 0"	16'- 6"	1'- 0"	44'- 6"	10'- 0"	20	20'- 0"	35	43'- 9"	17	12'- 9"	19	9'- 6"	--	-----	11	13'- 9"	6	5'- 3"	18	18'- 0"	21	15'- 9"	35	43'- 9"	17	8'- 6"	5
AA	2'- 0"	17'- 0"	1'- 0"	45'- 6"	10'- 6"	21	21'- 0"	36	45'- 0"	17	12'- 9"	19	9'- 6"	1	0'- 6"	11	13'- 9"	6	5'- 9"	19	19'- 0"	21	15'- 9"	36	45'- 0"	17	8'- 6"	6
BB	2'- 0"	17'- 6"	1'- 0"	47'- 0"	11'- 0"	21	21'- 0"	37	46'- 3"	19	14'- 3"	19	9'- 6"	--	-----	12	15'- 0"	7	6'- 3"	19	19'- 0"	23	17'- 3"	37	46'- 3"	17	8'- 6"	6
CC	2'- 0"	18'- 0"	1'- 0"	48'- 6"	12'- 0"	19	19'- 0"	38	47'- 6"	21	15'- 9"	23	11'- 6"	--	-----	12	15'- 0"	8	7'- 3"	19	19'- 0"	25	18'- 9"	38	47'- 6"	17	8'- 6"	6
DD	2'- 0"	18'- 6"	1'- 0"	50'- 0"	13'- 0"	18	18'- 0"	39	48'- 9"	23	17'- 3"	25	12'- 6"	--	-----	13	16'- 3"	9	8'- 3"	17	17'- 0"	27	20'- 3"	39	48'- 9"	21	10'- 6"	7
EE	2'- 0"	19'- 0"	1'- 0"	51'- 6"	13'- 0"	18	18'- 0"	40	50'- 0"	25	18'- 9"	25	12'- 6"	--	-----	13	16'- 3"	9	8'- 3"	17	17'- 0"	29	21'- 9"	40	50'- 0"	21	10'- 6"	7

Sheet 3 of 7

WING DETAILS

2:1 FILL SLOPE - TYPE II

VIRGINIA DEPARTMENT OF TRANSPORTATION

1006.24

STRUCTURE AND BRIDGE DIVISION

U.S. DEPARTMENT OF TRANSPORTATION
FEDERAL HIGHWAY ADMINISTRATION
EASTERN FEDERAL LANDS HIGHWAY DIVISION

DETAIL

BOX CULVERT
WING DETAIL
(TYPE II)

DETAIL APPROVED FOR USE --/----

REVISED:

DETAIL
604-D

10/24/2006 9:36:31 AM M:\Projects\VI\st_crol\nh66(008)proj_dev\Contract 2\details\boxwing.dgn

REG	STATE	PROJECT	SHEET NO.	TOTAL SHEETS
SE	VI	NH - 66(008)	M59	193

BCW-22

	WF1		WF2					WF3							WF4	
				LENGTH					a			LENGTH				
WING	SIZE	LENGTH	SIZE	From	To	Vary By	# Ea	SIZE	From	To	Vary By	From	To	Vary By	SIZE	LENGTH
A	4	8'- 6"	--	-----	-----	-----	--	4	3'- 6"	2'- 7"	0'- 1 3/8"	4'- 6"	3'- 7"	0'- 1 3/8"	4	8'- 7"
B	4	10'- 0"	--	-----	-----	-----	--	4	3'- 6"	2'- 6 3/4"	0'- 1 1/8"	4'- 6"	3'- 6 3/4"	0'- 1 1/8"	4	10'- 1"
C	4	11'- 0"	--	-----	-----	-----	--	4	3'- 6"	2'- 5 5/8"	0'- 1 1/8"	4'- 6"	3'- 5 5/8"	0'- 1 1/8"	4	11'- 0"
D	4	12'- 6"	--	-----	-----	-----	--	4	3'- 6"	2'- 6"	0'- 1"	4'- 6"	3'- 6"	0'- 1"	4	12'- 6"
E	4	14'- 0"	--	-----	-----	-----	--	4	3'- 6"	2'- 5 3/4"	0'- 7/8"	4'- 6"	3'- 5 3/4"	0'- 7/8"	4	14'- 0"
F	4	15'- 6"	4	5'- 1"	-----	-----	2	4	4'- 0"	2'- 7 1/8"	0'- 1 1/8"	5'- 0"	3'- 7 1/8"	0'- 1 1/8"	4	15'- 7"
G	4	17'- 0"	4	5'- 7"	-----	-----	2	4	4'- 0"	2'- 7"	0'- 1"	5'- 0"	3'- 7"	0'- 1"	4	17'- 1"
H	4	18'- 6"	4	9'- 3"	-----	-----	2	4	4'- 6"	2'- 7 1/2"	0'- 1 1/4"	5'- 6"	3'- 7 1/2"	0'- 1 1/4"	4	18'- 7"
I	4	19'- 6"	4	9'- 9"	-----	-----	2	4	4'- 6"	2'- 6 1/4"	0'- 1 1/4"	5'- 6"	3'- 6 1/4"	0'- 1 1/4"	4	19'- 7"
J	4	21'- 0"	4	12'- 8"	6'- 2 1/4"	6'- 5 3/4"	2	4	5'- 0"	2'- 7 1/8"	0'- 1 3/8"	6'- 0"	3'- 7 1/8"	0'- 1 3/8"	4	21'- 2"
K	4	22'- 6"	4	13'- 6"	6'- 7 5/8"	6'-10 3/8"	2	4	5'- 0"	2'- 5 3/4"	0'- 1 3/8"	6'- 0"	3'- 5 3/4"	0'- 1 3/8"	4	22'- 8"
L	4	24'- 0"	4	16'- 1"	5'-10 1/4"	5'- 1 3/8"	2	4	5'- 6"	2'- 6"	0'- 1 1/2"	6'- 6"	3'- 6"	0'- 1 1/2"	4	24'- 2"
M	4	25'- 6"	4	18'- 4"	5'- 3 1/2"	6'- 6 1/4"	2	4	5'- 3"	2'- 6 1/2"	0'- 1 5/8"	6'- 3"	3'- 6 1/2"	0'- 1 5/8"	4	25'- 9"
N	4	27'- 0"	4	19'- 5"	5'- 7 1/2"	6'-10 3/4"	2	4	5'- 4"	2'- 7"	0'- 1 1/2"	6'- 4"	3'- 7"	0'- 1 1/2"	4	27'- 3"
O	4	28'- 0"	4	21'- 1"	5'- 1"	5'- 4"	2	4	5'-10"	2'- 5 3/4"	0'- 1 3/4"	6'-10"	3'- 5 3/4"	0'- 1 3/4"	4	28'- 3"
P	4	29'- 6"	4	22'- 3"	5'- 4 1/8"	5'- 7 5/8"	2	4	4'-10"	2'- 6 3/8"	0'- 1 5/8"	5'-10"	3'- 6 3/8"	0'- 1 5/8"	4	29'- 9"
Q	4	31'- 0"	4	24'- 3"	4'-11 5/8"	6'- 5 1/8"	2	4	5'- 1"	2'- 5 1/2"	0'- 1 3/4"	6'- 1"	3'- 5 1/2"	0'- 1 3/4"	4	31'- 4"
R	4	32'- 6"	4	25'- 5"	5'- 2 3/4"	6'- 8 3/4"	2	4	5'- 1"	2'- 6 1/8"	0'- 1 5/8"	6'- 1"	3'- 6 1/8"	0'- 1 5/8"	4	32'-10"
S	4	34'- 0"	4	27'- 4"	4'-11"	5'- 7 1/4"	2	4	5'- 3"	2'- 5 3/4"	0'- 1 3/4"	6'- 3"	3'- 5 3/4"	0'- 1 3/4"	4	34'- 4"
T	4	35'- 6"	4	28'- 6"	5'- 1 1/2"	5'-10 1/8"	2	4	5'- 2"	2'- 7 1/8"	0'- 1 5/8"	6'- 2"	3'- 7 1/8"	0'- 1 5/8"	4	35'-10"
U	4	36'- 6"	4	30'- 0"	4'- 9 1/2"	6'- 3 5/8"	2	4	5'- 4"	2'- 6 3/4"	0'- 1 3/4"	6'- 4"	3'- 6 3/4"	0'- 1 3/4"	4	36'-11"
V	4	38'- 0"	4	31'- 3"	4'-11 1/2"	6'- 6 7/8"	2	4	5'- 5"	2'- 6"	0'- 1 3/4"	6'- 5"	3'- 6"	0'- 1 3/4"	4	38'- 5"
W	4	39'- 6"	4	33'- 1"	4'- 9"	5'- 8"	2	4	5'- 6"	2'- 7"	0'- 1 3/4"	6'- 6"	3'- 7"	0'- 1 3/4"	4	39'-11"
X	4	41'- 0"	4	34'-10"	4'- 6 1/4"	6'- 3/4"	2	4	5'- 8"	2'- 6 1/2"	0'- 1 7/8"	6'- 8"	3'- 6 1/2"	0'- 1 7/8"	4	41'- 6"
Y	4	42'- 6"	4	36'- 7"	4'- 4"	5'- 4 1/2"	2	4	5'- 6"	2'- 6"	0'- 2"	6'- 6"	3'- 6"	0'- 2"	4	43'- 1"
Z	4	44'- 0"	4	37'-10"	4'- 6 1/4"	5'- 6 5/8"	2	4	5'- 4"	2'- 6 1/4"	0'- 1 7/8"	6'- 4"	3'- 6 1/4"	0'- 1 7/8"	4	44'- 6"
AA	4	45'- 0"	4	39'- 2"	4'- 3 1/2"	5'- 9 3/4"	2	4	5'- 8"	2'- 6"	0'- 2"	6'- 8"	3'- 6"	0'- 2"	4	45'- 7"
BB	4	46'- 6"	4	40'-10"	4'- 1 7/8"	5'- 2 7/8"	2	4	5'- 9"	2'- 7"	0'- 2"	6'- 9"	3'- 7"	0'- 2"	4	47'- 2"
CC	4	48'- 0"	4	42'-10"	3'- 9"	4'-10 5/8"	2	4	6'- 1"	2'- 6 1/4"	0'- 2 1/4"	7'- 1"	3'- 6 1/4"	0'- 2 1/4"	4	48'-10"
DD	4	49'- 6"	4	44'- 9"	3'- 6"	4'- 7"	2	4	5'-11"	2'- 6 5/8"	0'- 2 3/8"	6'-11"	3'- 6 5/8"	0'- 2 3/8"	4	50'- 6"
EE	4	51'- 0"	4	46'- 1"	3'- 7 3/8"	4'- 8 5/8"	2	4	5'-10"	2'- 5 5/8"	0'- 2 3/8"	6'-10"	3'- 5 5/8"	0'- 2 3/8"	4	51'-11"

Sheet 4 of 7

STRUCTURE AND BRIDGE DIVISION

WING DETAILS

2:1 FILL SLOPE - TYPE II

VIRGINIA DEPARTMENT OF TRANSPORTATION

1006.25

U.S. DEPARTMENT OF TRANSPORTATION
FEDERAL HIGHWAY ADMINISTRATION
EASTERN FEDERAL LANDS HIGHWAY DIVISION

DETAIL

BOX CULVERT
WING DETAIL
(TYPE II)

DETAIL APPROVED FOR USE --/----

REVISED:

DETAIL
604-D

10/24/2006 9:37:47 AM M:\Projects\vll\st_proj\vh66(008)\proj_dev\Contract 2\details\boxwlrg.dgn

REG	STATE	PROJECT	SHEET NO.	TOTAL SHEETS
SE	VI	NH - 66(008)	M60	193

BCW-22

	WF5							WF6				WF7							WH1		WH3	
		a			LENGTH				LENGTH				a			LENGTH						
WING	SIZE	From	To	Vary By	From	To	Vary By	SIZE	From	To	Vary By	SIZE	From	To	Vary By	From	To	Vary By	SIZE	LENGTH	SIZE	LENGTH
A	--	-----	-----	-----	-----	-----	-----	4	3'- 6"	2'- 7½"	0'- 1¾"	--	-----	-----	-----	-----	-----	-----	4	8'- 6"	4	9'- 0"
B	--	-----	-----	-----	-----	-----	-----	4	3'- 6"	2'- 6"	0'- 1½"	--	-----	-----	-----	-----	-----	-----	4	10'- 0"	4	10'- 7"
C	--	-----	-----	-----	-----	-----	-----	4	3'- 6"	2'- 7"	0'- 1⅜"	--	-----	-----	-----	-----	-----	-----	4	11'- 0"	4	11'- 8"
D	--	-----	-----	-----	-----	-----	-----	4	3'- 6"	2'- 6¾"	0'- 1⅛"	--	-----	-----	-----	-----	-----	-----	4	12'- 6"	4	13'- 3"
E	--	-----	-----	-----	-----	-----	-----	4	3'- 6"	2'- 7"	0'- 1"	--	-----	-----	-----	-----	-----	-----	4	14'- 0"	4	14'-10"
F	--	-----	-----	-----	-----	-----	-----	4	4'- 0'	2'- 7½"	0'- 1⅜"	--	-----	-----	-----	-----	-----	-----	4	15'- 6"	4	16'- 5"
G	--	-----	-----	-----	-----	-----	-----	4	4'- 0'	2'- 7¾"	0'- 1¼"	--	-----	-----	-----	-----	-----	-----	4	17'- 0"	4	18'- 0"
H	--	-----	-----	-----	-----	-----	-----	4	4'- 6"	2'- 7¼"	0'- 1⅝"	--	-----	-----	-----	-----	-----	-----	4	18'- 6"	4	19'- 7"
I	--	-----	-----	-----	-----	-----	-----	4	4'- 6"	2'- 7½"	0'- 1½"	--	-----	-----	-----	-----	-----	-----	4	19'- 6"	4	20'- 8"
J	--	-----	-----	-----	-----	-----	-----	4	5'- 0'	2'- 8"	0'- 1¾"	--	-----	-----	-----	-----	-----	-----	4	21'- 0"	4	22'- 3"
K	--	-----	-----	-----	-----	-----	-----	4	5'- 0'	2'- 6¾"	0'- 1⅝"	--	-----	-----	-----	-----	-----	-----	4	22'- 6"	4	23'-10"
L	--	-----	-----	-----	-----	-----	-----	4	5'- 6"	2'- 6⅞"	0'- 1⅞"	--	-----	-----	-----	-----	-----	-----	4	24'- 0"	4	25'- 5"
M	4	6'- 0"	5'- 4½"	0'- 1¼"	7'- 0"	6'- 4½"	0'- 1¼"	4	6'- 0"	2'- 8"	0'- 2"	--	-----	-----	-----	-----	-----	-----	4	25'- 6"	4	27'- 0"
N	4	6'- 0"	5'- 5¾"	0'- 1¼"	7'- 0"	6'- 5¾"	0'- 1¼"	4	6'- 0"	2'- 8⅝"	0'- 1⅞"	--	-----	-----	-----	-----	-----	-----	4	27'- 0"	4	28'- 7"
O	4	6'- 6"	5'-11⅛"	0'- 1⅜"	7'- 6"	6'-11⅛"	0'- 1⅜"	4	6'- 6"	2'- 7¼"	0'- 2⅛"	--	-----	-----	-----	-----	-----	-----	4	28'- 0"	4	29'- 8"
P	4	5'-10"	4'-10¾"	0'- 1¼"	6'-10"	5'-10¾"	0'- 1¼"	4	6'- 6"	2'- 8"	0'- 2"	4	6'- 6"	5'-11"	0'- ⅞"	7'- 6"	6'-11"	0'- ⅞"	4	29'- 6"	4	31'- 3"
Q	4	6'- 3"	5'- 2⅝"	0'- 1⅜"	7'- 3'	6'- 2⅝"	0'- 1⅜"	4	7'- 0'	2'- 9"	0'- 2⅛"	4	7'- 0"	6'- 4⅛"	0'- ⅞"	8'- 0"	7'- 4⅛"	0'- ⅞"	4	31'- 0"	4	32'-10"
R	4	6'- 2"	5'- 2¾"	0'- 1¼"	7'- 2'	6'- 2¾"	0'- 1¼"	4	7'- 0'	2'- 4¾"	0'- 2⅛"	4	7'- 0"	6'- 3¼"	0'- ⅞"	8'- 0"	7'- 3¼"	0'- ⅞"	4	32'- 6"	4	34'- 5"
S	4	6'- 5"	5'- 4⅝"	0'- 1⅜"	7'- 5'	6'- 4⅝"	0'- 1⅜"	4	7'- 6"	2'- 5¼"	0'- 2¼"	4	7'- 6"	6'- 6⅝"	0'- ⅞"	8'- 6"	7'- 6⅝"	0'- ⅞"	4	34'- 0"	4	36'- 0"
T	5	6'- 5¼'	5'- 3½"	0'- 1¼"	7'- 7'	6'- 5¼"	0'- 1¼"	4	7'- 6"	2'- 6½"	0'- 2⅛"	5	7'- 5¼"	6'- 7½"	0'- ¾"	8'- 7'	7'- 9¼"	0'- ¾"	4	35'- 6"	4	37'- 7"
U	5	6'-11¼"	5'- 5⅜"	0'- 1⅜"	8'- 1'	6'- 7⅛"	0'- 1⅜"	4	8'- 0'	2'- 6¾"	0'- 2¼"	5	7'-11¼"	7'- ¾"	0'- ⅞"	9'- 1'	8'- 2½"	0'- ⅞"	4	36'- 6"	4	38'- 9"
V	5	6'-11¼"	5'- 7"	0'- 1¼"	8'- 1'	6'- 8¾"	0'- 1¼"	4	8'- 0'	2'- 8¼"	0'- 2⅛"	5	7'-11¼"	6'-11⅞'	0'- ⅞"	9'- 1'	8'- 1⅝"	0'- ⅞"	4	38'- 0"	4	40'- 4"
W	5	7'- 4¼"	5'- 7⅝"	0'- 1⅜"	8'- 6"	6'- 9⅜"	0'- 1⅜"	4	8'- 6"	2'- 8¼"	0'- 2¼"	5	8'- 5¼"	7'- 5⅞"	0'- ⅞"	9'- 7'	8'- 7⅝"	0'- ⅞"	4	39'- 6"	4	41'-11"
X	5	7'-10¼"	5'-10⅞"	0'- 1⅜"	9'- 0"	7'- ⅝"	0'- 1⅜"	4	8'-11"	2'- 7"	0'- 2⅜"	5	8'-11¼"	7'-11⅞"	0'- ⅞"	10'- 1"	9'- 1⅝"	0'- ⅞"	4	41'- 0"	4	43'- 6"
Y	5	7'-11¼"	5'- 6¾"	0'- 1½"	9'- 1'	6'- 8½"	0'- 1½"	4	9'- 5"	2'- 8¼"	0'- 2⅜"	5	9'- 5¼"	8'- ¼"	0'- 1"	10'- 7"	9'- 2"	0'- 1"	4	42'- 6"	4	45'- 0"
Z	5	8'- ¼'	5'- 7⅜"	0'- 1⅜"	9'- 2'	6'- 9⅛"	0'- 1⅜"	4	9'- 5"	2'- 5⅞"	0'- 2⅜"	5	9'- 5¼"	8'- 2⅜"	0'- ⅞"	10'- 7"	9'- 4⅛"	0'- ⅞"	4	44'- 0"	4	46'- 7"
AA	6	8'- 5½"	5'-10"	0'- 1½"	9'-10"	7'- 2½"	0'- 1½"	4	9'-11"	2'- 5"	0'- 2½"	6	9'-11½"	8'- 6½"	0'- 1"	11'- 4'	9'-11"	0'- 1"	4	45'- 0"	4	47'- 9"
BB	6	8'-10½"	6'- 0"	0'- 1½"	10'- 3"	7'- 4½"	0'- 1½"	4	10'- 5"	2'- 8½"	0'- 2½"	6	10'- 5½"	9'- ½"	0'- 1"	11'-10"	10'- 5'	0'- 1"	4	46'- 6"	4	49'- 4"
CC	6	9'- 8½"	6'- 3⅞"	0'- 1⅝"	11'- 1"	7'- 8⅜"	0'- 1⅝"	4	11'- 5"	2'- 8½"	0'- 2¾"	6	11'- 5½"	9'-10⅜"	0'- 1⅛"	12'-10'	11'- 2⅞"	0'- 1⅛'	4	48'- 0"	4	50'-11"
DD	6	10'- 2½"	6'- 3¼"	0'- 1¾"	11'- 7"	7'- 7¾"	0'- 1¾"	4	12'- 5"	2'- 8"	0'- 3"	7	12'- 5¾"	10'- 3½"	0'- 1¼"	14'- 1"	11'-10¾"	0'- 1¼'	4	49'- 6"	4	52'- 6"
EE	7	10'- 2¾"	6'- 0"	0'- 1¾"	11'-10"	7'- 7¼"	0'- 1¾"	4	12'- 5"	2'-10"	0'- 2⅞"	7	12'- 5¾"	10'- 6⅛"	0'- 1⅛"	14'- 1"	12'- 1⅜"	0'- 1⅛'	4	51'- 0"	4	54'- 1"

Sheet 5 of 7

WING DETAILS

2:1 FILL SLOPE - TYPE II

VIRGINIA DEPARTMENT OF TRANSPORTATION

1006.26

STRUCTURE AND BRIDGE DIVISION

U.S. DEPARTMENT OF TRANSPORTATION
FEDERAL HIGHWAY ADMINISTRATION
EASTERN FEDERAL LANDS HIGHWAY DIVISION

DETAIL

BOX CULVERT
WING DETAIL
(TYPE II)

DETAIL APPROVED FOR USE --/----

REVISED:

DETAIL
604-D

10/24/2006 9:38:20 AM M:\Projects\vlfs\st_crol\vh66\008\proj_dev\Contract 2\details\boxwing.dgn

REG	STATE	PROJECT	SHEET NO.	TOTAL SHEETS
SE	VI	NH - 66(008)	M61	193

BCW-22

WING	WH2 SIZE	WH2 LENGTH From	WH2 LENGTH To	WH2 LENGTH Vary By	* Eq	WV1 SIZE	WV1 a From	WV1 a To	WV1 a Vary By	WV1 LENGTH From	WV1 LENGTH To	WV1 LENGTH Vary By	WV2 SIZE	WV2 LENGTH From	WV2 LENGTH To	WV2 LENGTH Vary By
A	4	6'- 6"	2'-10½"	3'- 7½"	2	4	5'- ¼"	2'- 3¼"	0'- 4⅛"	7'- 0"	4'- 3"	0'- 4⅛"	4	5'- 0"	2'- 5¼"	0'- 5⅛"
B	4	6'- 7"	2'-10⅝"	3'- 8⅜"	2	4	5'- 6¼"	2'- 1"	0'- 4⅛"	7'- 6"	4'- ¾"	0'- 4⅛"	4	5'- 6"	2'- 1"	0'- 5⅛"
C	4	9'-10"	2'- 9¼"	3'- 6⅜"	2	4	6'- ¼"	2'- 1½"	0'- 4¼"	8'- 0"	4'- 1¼"	0'- 4¼"	4	6'- 0"	2'- 5"	0'- 5⅜"
D	4	9'-10"	2'- 9½"	3'- 6¼"	2	4	6'- 6¼"	2'- 3¼"	0'- 4¼"	8'- 6"	4'- 3"	0'- 4¼"	4	6'- 6"	2'- ¼"	0'- 5⅜"
E	4	13'- 6"	2'- 9¾"	3'- 6¾"	2	4	7'- ¼"	2'- ¾"	0'- 4¼"	9'- 0"	4'- ½"	0'- 4¼"	4	7'- 0"	2'- 2¼"	0'- 5¼"
F	4	13'- 7"	2'-10"	3'- 7"	2	4	7'- 6¼"	2'- 2½"	0'- 4¼"	9'- 6"	4'- 2¼"	0'- 4¼"	4	7'- 6"	2'- 3"	0'- 5¼"
G	4	13'- 7"	2'-10"	3'- 7"	2	4	8'- ¼"	2'- 0"	0'- 4¼"	10'- 0"	3'-11¾"	0'- 4¼"	4	8'- 0"	2'- 3¾"	0'- 5¼"
H	4	17'- 3"	2'-10"	3'- 7¼"	2	4	8'- 6¼"	2'- 4"	0'- 4⅛"	10'- 6"	4'- 3¾"	0'- 4⅛"	4	8'- 6"	2'- 4½"	0'- 5¼"
I	4	16'-11"	2'- 9½"	3'- 6⅜"	2	4	9'- ¼"	2'- 3½"	0'- 4¼"	11'- 0"	4'- 3¼"	0'- 4¼"	4	9'- 0"	2'- 3⅜"	0'- 5⅜"
J	4	20'- 6"	2'- 9½"	3'- 6½"	2	4	9'- 6¼"	2'- 1"	0'- 4¼"	11'- 6"	4'- ¾"	0'- 4¼"	4	9'- 6"	2'- 6"	0'- 5¼"
K	4	20'- 7"	2'- 9⅞"	3'- 6⅝"	2	4	10'- ¼"	2'- 2¾"	0'- 4¼"	12'- 0"	4'- 2½"	0'- 4¼"	4	10'- 0"	2'- 1½"	0'- 5¼"
L	4	20'- 8"	2'- 9⅝"	3'- 6⅞"	2	4	8'- ¼"	2'- 0"	0'- 4¼"	10'- 0"	3'-11¾"	0'- 4¼"	4	10'- 6"	2'- 2¼"	0'- 5¼"
M	4	24'- 3"	2'- 9¾"	3'- 6⅞"	2	4	8'- ¼"	2'- 0"	0'- 4¼"	10'- 0"	3'-11¾"	0'- 4¼"	4	11'- 0"	2'- 3"	0'- 5¼"
N	4	24'- 4"	2'-10"	3'- 7"	2	4	6'- 3¼"	2'- ¼"	0'- 4¼"	8'- 3"	4'- 0"	0'- 4¼"	4	11'- 6"	2'- 3¾"	0'- 5¼"
O	4	27'- 6"	2'- 9⅜"	3'- 6⅜"	2	4	6'- 8¼"	2'- 1"	0'- 4¼"	8'- 8"	4'- ¾"	0'- 4¼"	4	12'- 0"	2'- 1¾"	0'- 5⅜"
P	4	27'- 7"	2'- 9½"	3'- 6½"	2	4	7'- 4¼"	2'- ½"	0'- 4¼"	9'- 4"	4'- ¼"	0'- 4¼"	4	12'- 6"	2'- 5¼"	0'- 5¼"
Q	4	27'- 8"	2'- 9⅝"	3'- 6⅝"	2	4	7'- 4¼"	2'- ½"	0'- 4¼"	9'- 4"	4'- ¼"	0'- 4¼"	4	13'- 0"	2'- 6"	0'- 5¼"
R	4	31'- 3"	2'-10"	3'- 6⅝"	2	4	7'- 4¼"	2'- ½"	0'- 4¼"	9'- 4"	4'- ¼"	0'- 4¼"	4	13'- 6"	2'- 1½"	0'- 5¼"
S	4	31'- 4"	2'-10"	3'- 6¾"	2	4	7'- 4¼"	2'- ½"	0'- 4¼"	9'- 4"	4'- ¼"	0'- 4¼"	4	14'- 0"	2'- 2¼"	0'- 5¼"
T	4	35'- 0"	2'-10⅛"	3'- 6⅞"	2	4	6'-11¼"	2'- 1½"	0'- 4⅛"	8'-11"	4'- 1¼"	0'- 4⅛"	4	14'- 6"	2'- 3"	0'- 5¼"
U	4	34'- 7"	2'- 9⅝"	3'- 6⅜"	2	4	7'- ¼"	2'- ¾"	0'- 4¼"	9'- 0"	4'- ½"	0'- 4¼"	4	15'- 0"	2'- 3¾"	0'- 5¼"
V	4	34'- 8"	2'- 9½"	3'- 6½"	2	4	7'- 4¼"	2'- ½"	0'- 4¼"	9'- 4"	4'- ¼"	0'- 4¼"	4	15'- 6"	2'- 4½"	0'- 5¼"
W	4	38'- 3"	2'-10"	3'- 6½"	2	4	7'- 7¼"	2'- 3½"	0'- 4¼"	9'- 7"	4'- 3¼"	0'- 4¼"	4	16'- 3"	2'- 8¼"	0'- 5¼"
X	4	38'- 4"	2'- 9¾"	3'- 6⅝"	2	4	8'- 6¼"	2'- 6"	0'- 4¼"	10'- 6"	4'- 5¾"	0'- 4¼"	4	17'- 0"	3'- 0"	0'- 5¼"
Y	4	42'- 0"	2'- 9¾"	3'- 6¾"	2	4	9'- 7¼"	2'- 6¼"	0'- 4¼"	11'- 7"	4'- 6"	0'- 4¼"	4	17'- 6"	2'- 7½"	0'- 5¼"
Z	4	42'- 1"	2'- 9⅜"	3'- 6⅞"	2	4	9'- 7¼"	2'- 6¼"	0'- 4¼"	11'- 7"	4'- 6"	0'- 4¼"	4	18'- 0"	2'- 8¼"	0'- 5¼"
AA	4	41'- 8"	2'- 9⅞"	3'- 6⅜"	2	4	10'- ¼"	2'- 7"	0'- 4¼"	12'- 0"	4'- 6¾"	0'- 4¼"	4	18'- 6"	2'- 9"	0'- 5¼"
BB	4	45'- 3"	2'- 9"	3'- 6½"	2	4	10'- ¼"	2'- 7"	0'- 4¼"	12'- 0"	4'- 6¾"	0'- 4¼"	4	19'- 0"	2'- 9¾"	0'- 5¼"
CC	4	45'- 4"	2'-10"	3'- 6½"	2	4	9'- 3¼"	2'- 6½"	0'- 4¼"	11'- 3"	4'- 6¼"	0'- 4¼"	4	19'- 6"	2'-10½"	0'- 5¼"
DD	4	49'- 0"	2'- 9⅞"	3'- 6⅝"	2	4	8'-11¼"	2'- 6¾"	0'- 4¼"	10'-11"	4'- 6½"	0'- 4¼"	4	20'- 0"	2'-11¼"	0'- 5¼"
EE	4	49'- 1"	2'- 9¼"	3'- 6¾"	2	4	8'-10¼"	2'- 5¾"	0'- 4¼"	10'-10"	4'- 5½"	0'- 4¼"	4	20'- 6"	3'- 0"	0'- 5¼"

Sheet 6 of 7

STRUCTURE AND BRIDGE DIVISION

WING DETAILS

2:1 FILL SLOPE - TYPE II

VIRGINIA DEPARTMENT OF TRANSPORTATION

1006.27

U.S. DEPARTMENT OF TRANSPORTATION
FEDERAL HIGHWAY ADMINISTRATION
EASTERN FEDERAL LANDS HIGHWAY DIVISION

DETAIL

BOX CULVERT
WING DETAIL
(TYPE II)

DETAIL APPROVED FOR USE --/----

REVISED:

DETAIL
604-D

10/24/2006 9:38:56 AM M:\Projects\ils\st_crat\nh66\008\proj_dev\Contract 2\details\boxwing.dgn

REG	STATE	PROJECT	SHEET NO.	TOTAL SHEETS
SE	VI	NH - 66(008)	M62	193

BCW-22

	WV3							WV4						
		a			LENGTH				a			LENGTH		
WING	SIZE	From	To	Vary By	From	To	Vary By	SIZE	From	To	Vary By	From	To	Vary By
A	--	-----	-----	-----	-----	-----	-----	--	-----	-----	-----	-----	-----	-----
B	--	-----	-----	-----	-----	-----	-----	--	-----	-----	-----	-----	-----	-----
C	--	-----	-----	-----	-----	-----	-----	--	-----	-----	-----	-----	-----	-----
D	--	-----	-----	-----	-----	-----	-----	--	-----	-----	-----	-----	-----	-----
E	--	-----	-----	-----	-----	-----	-----	--	-----	-----	-----	-----	-----	-----
F	--	-----	-----	-----	-----	-----	-----	--	-----	-----	-----	-----	-----	-----
G	--	-----	-----	-----	-----	-----	-----	--	-----	-----	-----	-----	-----	-----
H	--	-----	-----	-----	-----	-----	-----	--	-----	-----	-----	-----	-----	-----
I	--	-----	-----	-----	-----	-----	-----	--	-----	-----	-----	-----	-----	-----
J	--	-----	-----	-----	-----	-----	-----	--	-----	-----	-----	-----	-----	-----
K	--	-----	-----	-----	-----	-----	-----	--	-----	-----	-----	-----	-----	-----
L	4	10'- 6 1/4"	8'- 4 1/4"	0'- 3 1/4"	12'- 6"	10'- 4"	0'- 3 1/4"	--	-----	-----	-----	-----	-----	-----
M	4	11'- 1/4"	8'- 3 3/4"	0'- 3 1/4"	13'- 0"	10'- 3 1/2"	0'- 3 1/4"	--	-----	-----	-----	-----	-----	-----
N	4	10'- 1/4"	6'- 7 5/8"	0'- 3 1/8"	12'- 0"	8'- 7 3/8"	0'- 3 1/8"	4	11'- 6 1/4"	10'- 3 3/8"	0'- 2 1/8"	13'- 6"	12'- 3 1/8"	0'- 2 1/8"
O	4	10'- 6 1/4"	7'- 0"	0'- 3 1/4"	12'- 6"	8'-11 3/4"	0'- 3 1/4"	4	12'- 1/4"	10'- 9 3/8"	0'- 2 1/8"	14'- 0"	12'- 9 1/8"	0'- 2 1/8"
P	4	11'- 2 1/4"	7'- 8"	0'- 3 1/4"	13'- 2"	9'- 7 3/4"	0'- 3 1/4"	4	12'- 6 1/4"	11'- 4 3/4"	0'- 2 1/4"	14'- 6"	13'- 4 1/2"	0'- 2 1/4"
Q	4	11'- 1 1/4"	7'- 8 5/8"	0'- 3 1/8"	13'- 1"	9'- 8 5/8"	0'- 3 1/8"	4	13'- 1/4"	11'- 5 1/8"	0'- 2 1/8"	15'- 0"	13'- 4 7/8"	0'- 2 1/8"
R	4	11'- 1 1/4"	7'- 8 5/8"	0'- 3 1/8"	13'- 1"	9'- 8 3/8"	0'- 3 1/8"	5	13'- 5 3/4"	11'- 4 1/4"	0'- 2 1/8"	15'- 6"	13'- 4 1/2"	0'- 2 1/8"
S	4	11'- 1 1/4"	7'- 8 5/8"	0'- 3 1/8"	13'- 1"	9'- 8 3/8"	0'- 3 1/8"	5	13'-11 3/4"	11'- 3 7/8"	0'- 2 1/8"	16'- 0"	13'- 4 1/8"	0'- 2 1/8"
T	4	11'- 3 1/4"	7'- 4 3/8"	0'- 3 1/8"	13'- 3"	9'- 4 1/8"	0'- 3 1/8"	5	14'- 5 3/4"	11'- 5 5/8"	0'- 2 1/8"	16'- 6"	13'- 5 7/8"	0'- 2 1/8"
U	5	11'-10 3/4"	7'- 3 1/2"	0'- 3 1/4"	13'-11"	9'- 3 3/4"	0'- 3 1/4"	5	14'-11 3/4"	12'- 1 3/4"	0'- 2 1/8"	17'- 0"	14'- 2"	0'- 2 1/8"
V	5	12'- 2 3/4"	7'- 9 5/8"	0'- 3 1/8"	14'- 3"	9'- 9 7/8"	0'- 3 1/8"	6	15'- 5 5/8"	12'- 5 1/2"	0'- 2 1/8"	17'- 7"	14'- 6 7/8"	0'- 2 1/8"
W	5	12'-11 3/4"	8'- 3/8"	0'- 3 1/8"	15'- 0"	10'- 5/8"	0'- 3 1/8"	6	16'- 2 5/8"	13'- 2 1/2"	0'- 2 1/8"	18'- 4"	15'- 3 7/8"	0'- 2 1/8"
X	6	13'- 4 5/8"	8'-11 1/2"	0'- 3 1/8"	15'- 6"	11'- 7/8"	0'- 3 1/8"	6	16'-11 5/8"	13'- 7 1/4"	0'- 2 1/8"	19'- 1"	15'- 8 5/8"	0'- 2 1/8"
Y	6	13'-10 5/8"	9'-11 3/4"	0'- 3 1/8"	16'- 0"	12'- 1 1/8"	0'- 3 1/8"	6	17'- 5 3/8"	14'- 1 1/4"	0'- 2 1/8"	19'- 7"	16'- 2 5/8"	0'- 2 1/8"
Z	6	14'- 4 5/8"	9'-11 1/2"	0'- 3 1/8"	16'- 6"	12'- 7/8"	0'- 3 1/8"	6	17'-11 5/8"	14'- 7 1/4"	0'- 2 1/8"	20'- 1"	16'- 8 5/8"	0'- 2 1/8"
AA	6	14'-10 5/8"	10'- 3 3/8"	0'- 3 1/4"	17'- 0"	12'- 4 3/4"	0'- 3 1/4"	7	18'- 5 5/8"	15'- 1 1/4"	0'- 2 1/8"	20'- 8"	17'- 3 5/8"	0'- 2 1/8"
BB	6	15'- 4 5/8"	10'- 2 7/8"	0'- 3 1/4"	17'- 6"	12'- 4 1/4"	0'- 3 1/4"	7	18'-11 5/8"	15'- 7 1/4"	0'- 2 1/8"	21'- 2"	17'- 9 5/8"	0'- 2 1/8"
CC	6	15'- 1 5/8"	9'- 8"	0'- 3 1/8"	17'- 3"	11'- 9 3/8"	0'- 3 1/8"	7	19'- 5 5/8"	15'- 4 3/4"	0'- 2 1/8"	21'- 8"	17'- 7 1/8"	0'- 2 1/8"
DD	6	15'- 3 5/8"	9'- 3 3/4"	0'- 3 1/8"	17'- 5"	11'- 5 1/8"	0'- 3 1/8"	7	19'-11 5/8"	15'- 6 1/2"	0'- 2 1/8"	22'- 2"	17'- 8 7/8"	0'- 2 1/8"
EE	7	15'- 9 5/8"	9'- 3 1/2"	0'- 3 1/8"	18'- 0"	11'- 5 7/8"	0'- 3 1/8"	8	20'- 5 1/2"	16'- 3/8"	0'- 2 1/8"	22'- 9"	18'- 3 7/8"	0'- 2 1/8"

Sheet 7 of 7

WING DETAILS

2:1 FILL SLOPE - TYPE II

DEPARTMENT OF TRANSPORTATION

STRUCTURE AND BRIDGE DIVISION

1006.28

U.S. DEPARTMENT OF TRANSPORTATION
FEDERAL HIGHWAY ADMINISTRATION
EASTERN FEDERAL LANDS HIGHWAY DIVISION

DETAIL

BOX CULVERT
WING DETAIL
(TYPE II)

DETAIL APPROVED FOR USE --/----

REVISED:

DETAIL
604-D

10/24/2006 9:39:47 AM M:\Projects\FLS\st_crok\nh66(008)\proj_dev\Contract 2\details\boxwing.dgn

REG	STATE	PROJECT	SHEET NO.	TOTAL SHEETS
SE	VI	NH-66(008)	M63	193

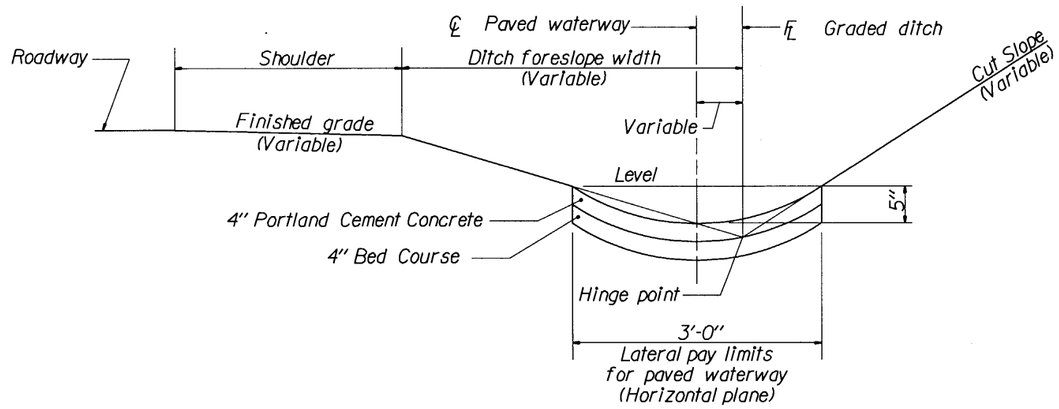

PAVED WATERWAY

NOTES:

1. The approximate shape of the paved waterway is an arc with a radius of 2.9 feet.
2. At inlets and other special locations, widen and shape paved waterway to drain.
3. Construct concrete paved waterway in uniform sections 20 feet in length, except closure sections which are to be not less than 5 feet in length. Place expansion joints, with curtain walls at 100 foot intervals.
4. At the outlet end of each concrete paved waterway, construct a curtain wall on the downstream end of the last section.

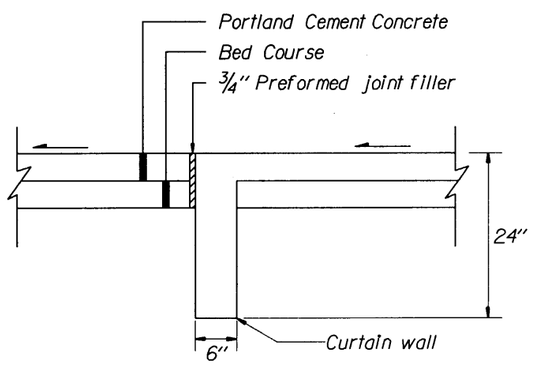

SECTION A-A

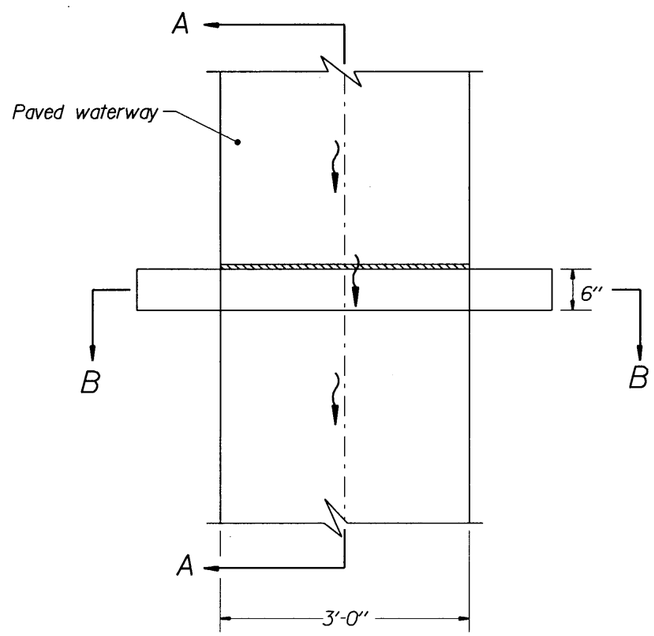

PLAN
EXPANSION JOINT

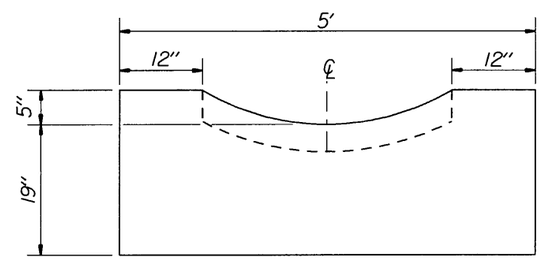

SECTION B-B

NOT TO SCALE

U.S. DEPARTMENT OF TRANSPORTATION
FEDERAL HIGHWAY ADMINISTRATION
EASTERN FEDERAL LANDS HIGHWAY DIVISION

DETAIL
PAVED WATERWAY
TYPE 4

DETAIL APPROVED FOR USE XX/XX
REVISED: XX/XX

DETAIL
E608-1

10/18/2006 7:34:04 AM M:\Projects\vils\st_crdx\nh66(008)proj_dev\Contract 2\details\Details\2.dgn

REG	STATE	PROJECT	SHEET NO.	TOTAL SHEETS
SE	VI	NH-66(008)	M64	193

Note:

1. Place 3-inches, minimum aggregate bed course under all curb and gutter.

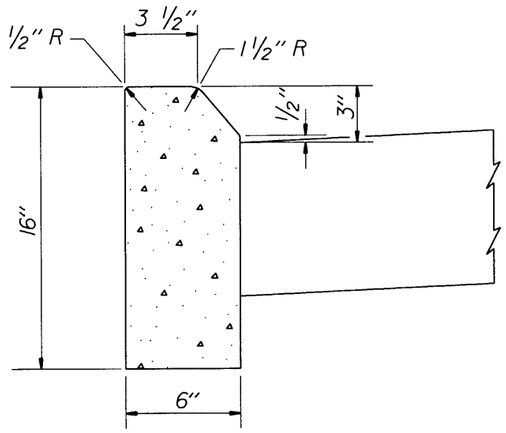

16-INCH DEPTH
(MOUNTABLE)

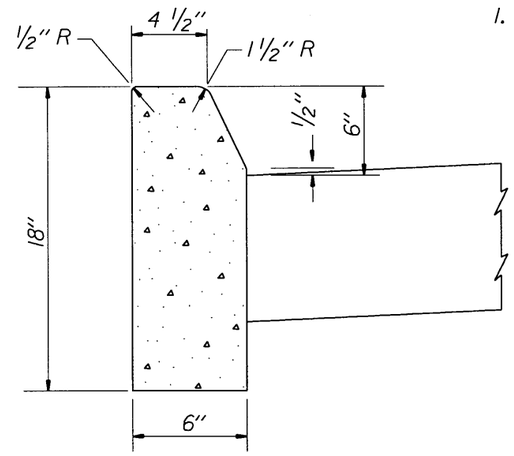

18-INCH DEPTH
(NON- MOUNTABLE)

PORTLAND CEMENT CONCRETE CURB

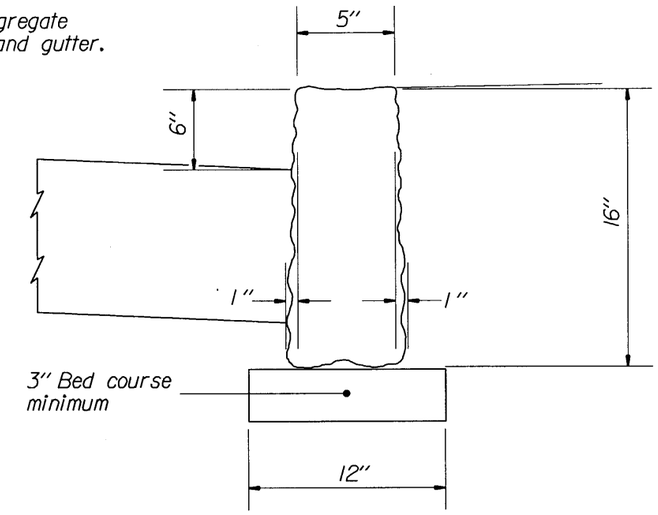

STONE CURB
16-INCH DEPTH
(NON-MOUNTABLE)

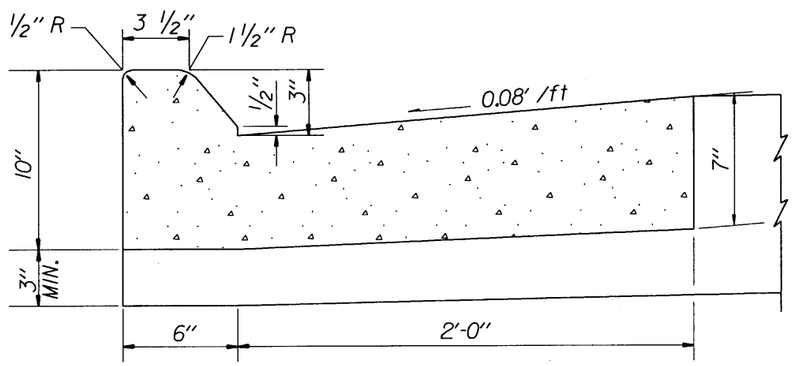

10-INCH DEPTH
(MOUNTABLE)

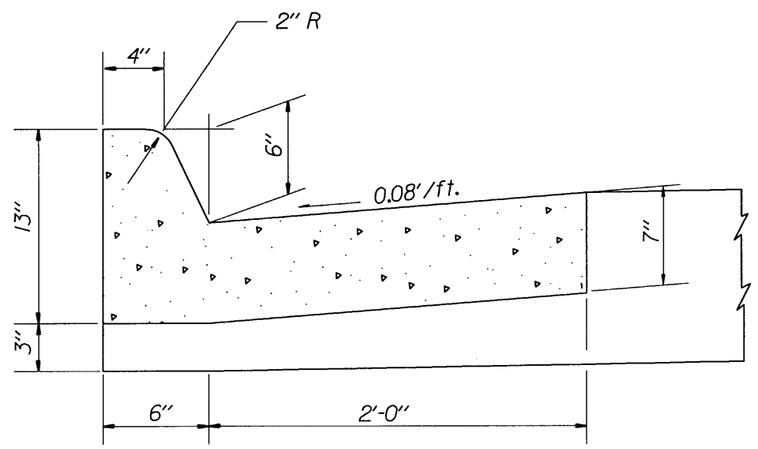

13-INCH DEPTH
(NON- MOUNTABLE)

PORTLAND CEMENT CONCRETE CURB AND GUTTER

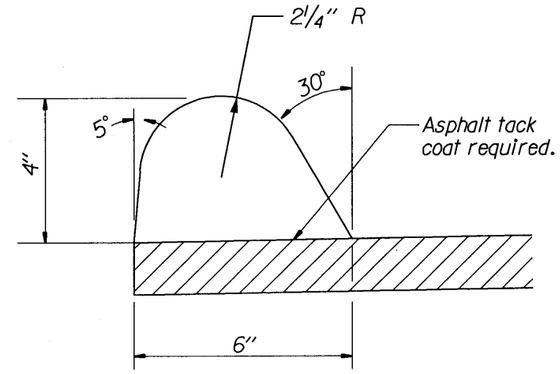

ASPHALT CONCRETE CURB
5-INCH DEPTH
(NON-MOUNTABLE)

Asphalt tack coat may be rapid curing liquid asphalt or emulsified asphalt.

NOT TO SCALE

U.S. DEPARTMENT OF TRANSPORTATION
FEDERAL HIGHWAY ADMINISTRATION
EASTERN FEDERAL LANDS HIGHWAY DIVISION

DETAIL

CURBS

DETAIL APPROVED FOR USE --/----

REVISED:

DETAIL
E609-1

10/18/2006 7:35:09 AM M:\Projects\vlls\st_crol\nh66(008)\proj_dev\Contract 2\details\Details\2.dgn

REG	STATE	PROJECT	SHEET NO.	TOTAL SHEETS
SE	VI	NH-66(008)	M65	193

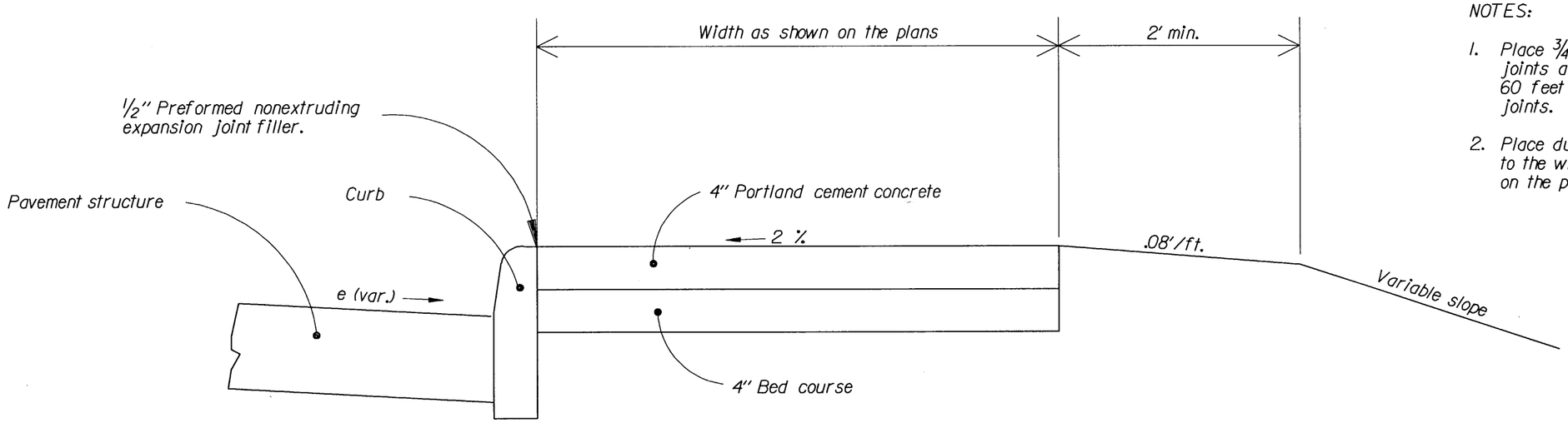

SIDEWALK WITH CURB

NOTES:

1. Place 3/4-inch transverse expansion joints at intervals of not more than 60 feet to match adjacent curb expansion joints.
2. Place dummy joints at intervals equal to the width of the sidewalk as shown on the plans.

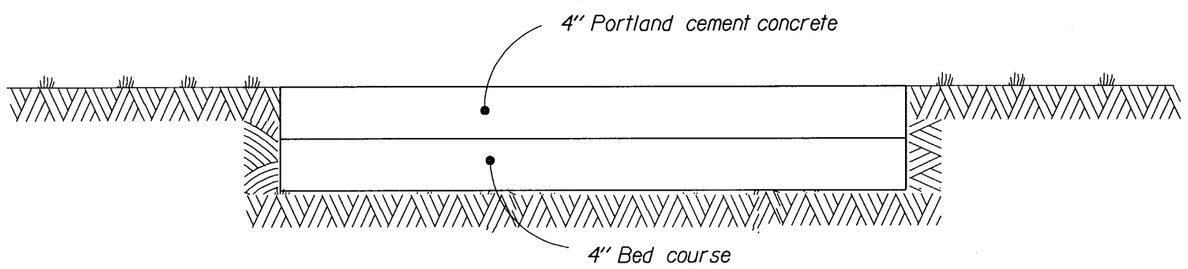

SIDEWALK

NOT TO SCALE

U.S. DEPARTMENT OF TRANSPORTATION
FEDERAL HIGHWAY ADMINISTRATION
EASTERN FEDERAL LANDS HIGHWAY DIVISION

DETAIL

PORTLAND CEMENT CONCRETE SIDEWALK

DETAIL APPROVED FOR USE XX/XX

REVISED: XX/XX

DETAIL E615-1

10/18/2006 7:36:23 AM M:\Projects\vlls\st_crolx\nh66(008)proj_dev\Contract 2\details\Details\V2.dgn

REG	STATE	PROJECT	SHEET NO.	TOTAL SHEETS
SE	VI	NH-66(008)	M66	193

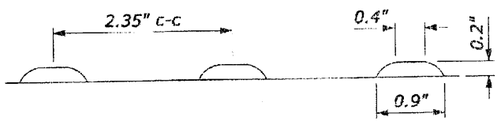

SECTION
TRUNCATED DOME

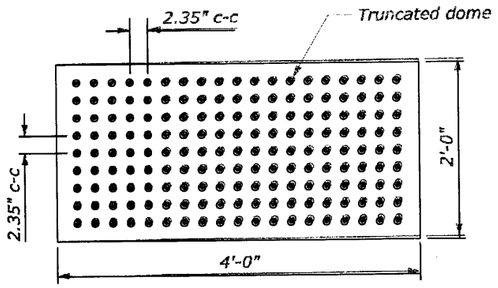

PLAN

DETECTABLE WARNING FIELD WITH TRUNCATED DOMES

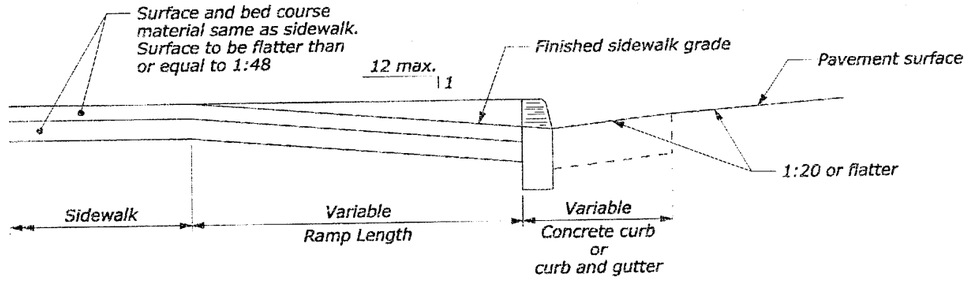

RAMP - TYPICAL SECTION

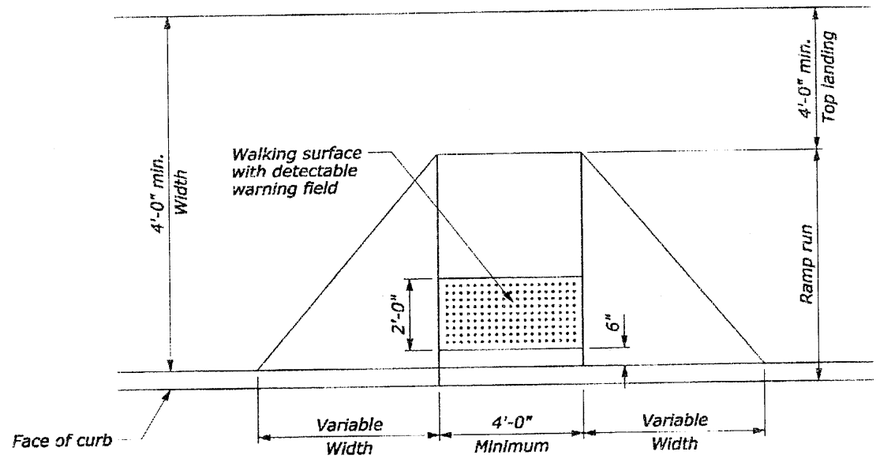

PERPENDICULAR CURB RAMP

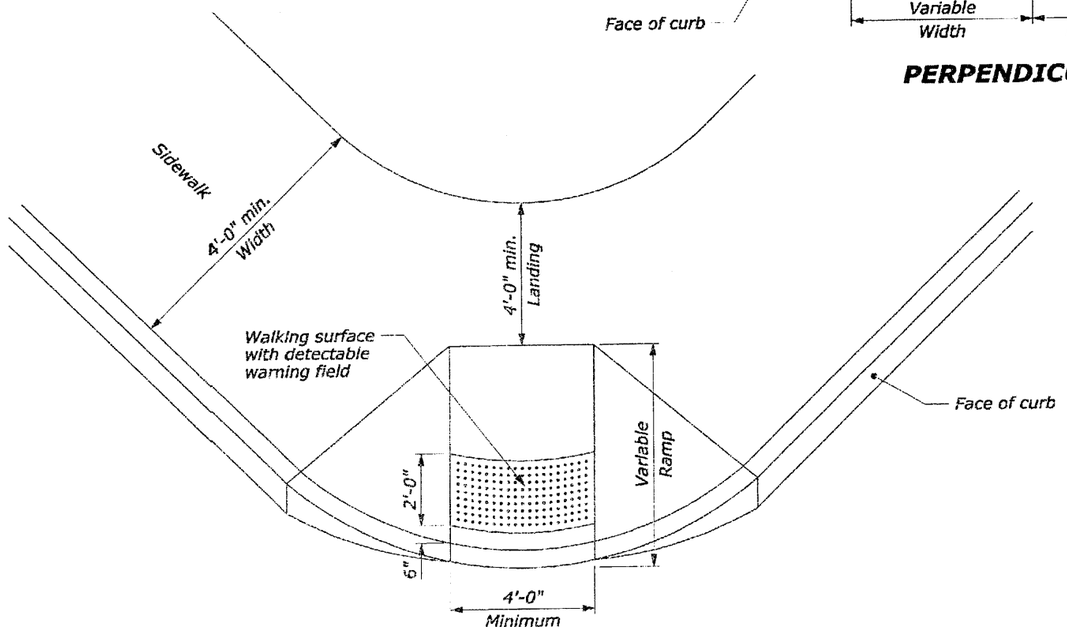

DIAGONAL CURB RAMP

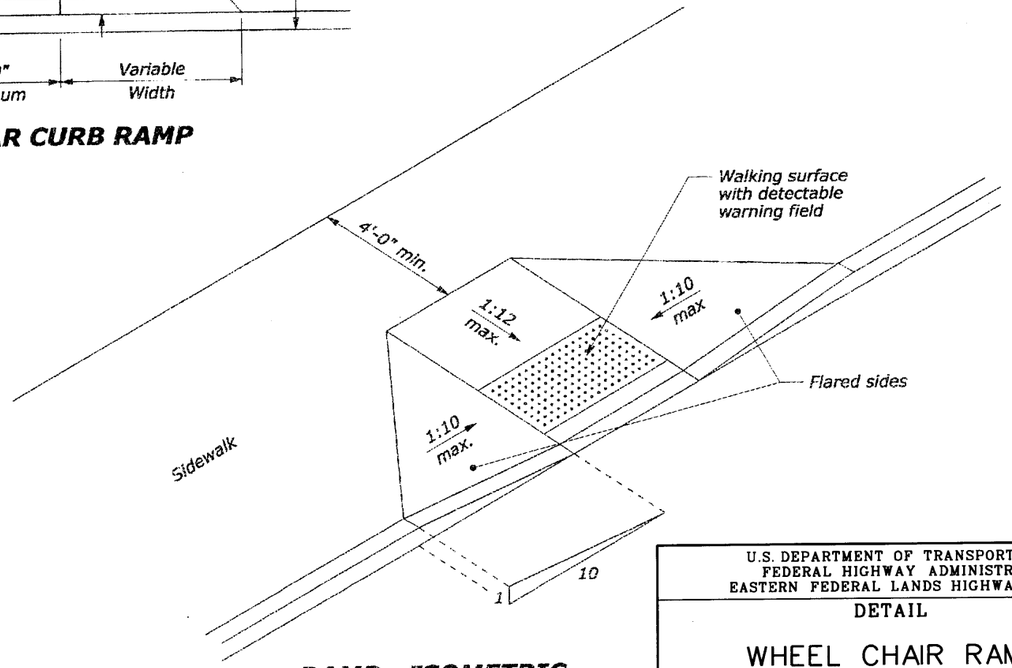

RAMP - ISOMETRIC

NO SCALE

NOTE:

1. The maximum cross slopes of ramps must not exceed 2% in any direction.
2. Use a coarse broom finish running perpendicular to the slope to create a slip resistant surface on concrete ramp surfaces, exclusive of the detectable warning fields.
3. Construct curb ramp perpendicular to the curb. Avoid skewing the ramp face.
4. Construct ramp transitions between walks, gutters, or streets that are flush and free of abrupt vertical changes not to exceed 2.5 inches.
5. Locate drainage inlets and manholes outside of ramp walking surfaces or landings.

U.S. DEPARTMENT OF TRANSPORTATION
FEDERAL HIGHWAY ADMINISTRATION
EASTERN FEDERAL LANDS HIGHWAY DIVISION

DETAIL

WHEEL CHAIR RAMP CURB CUT

DETAIL APPROVED FOR USE --/----

REVISED: 6/2005

DETAIL
E615-3

10/19/2006 1:08:59 PM M:\Projects\vi\st_croix\nh66(008)\proj_dev\Contract 2\details\dt615\5x03.dgn

REG	STATE	PROJECT	SHEET NO.	TOTAL SHEETS
SE	VI	NH-66(008)	M67	193

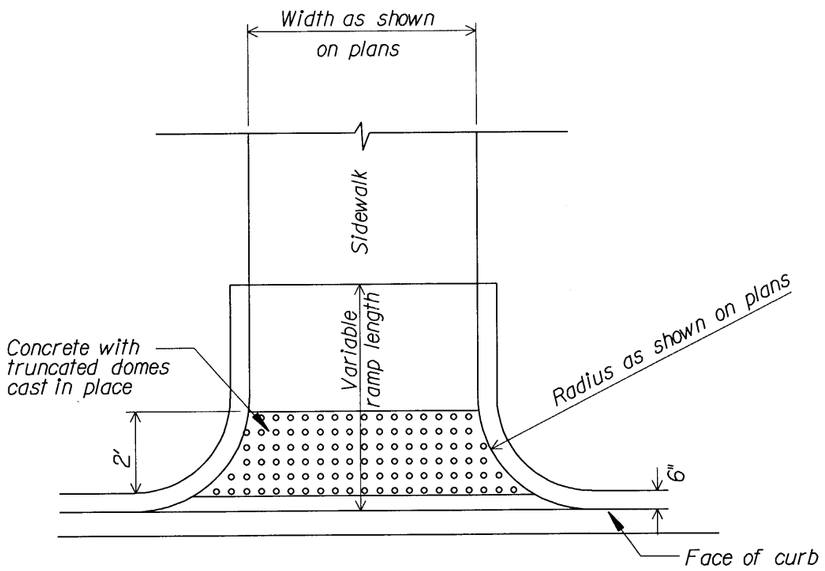

RAMP - PLAN

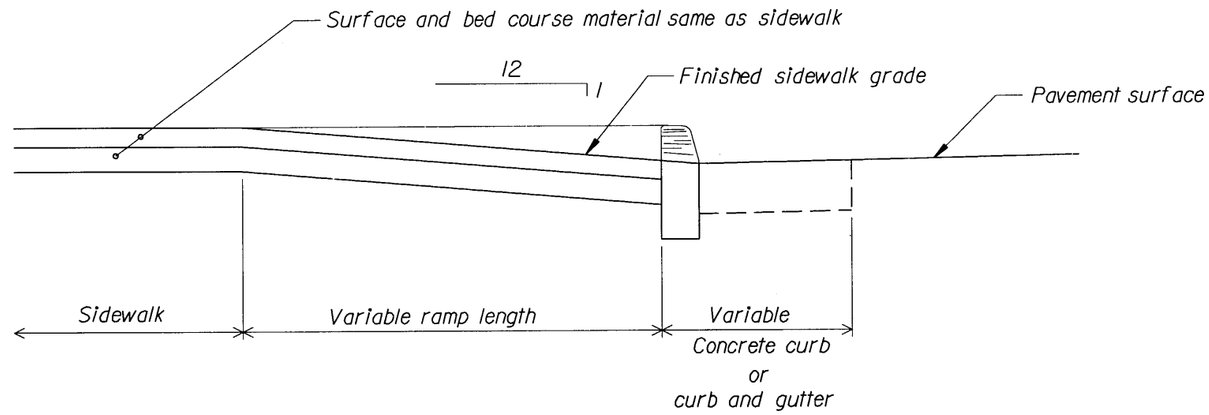

RAMP - TYPICAL SECTION

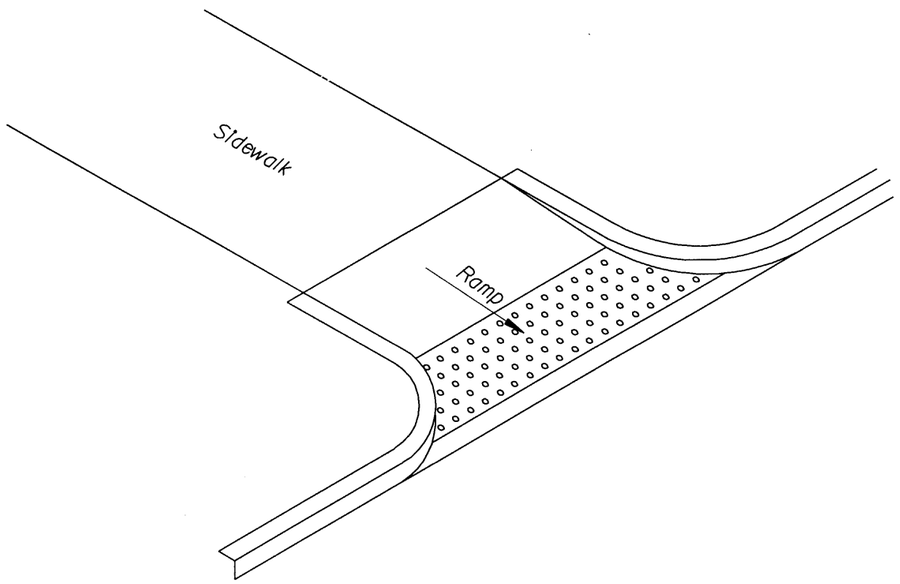

RAMP - ISOMETRIC

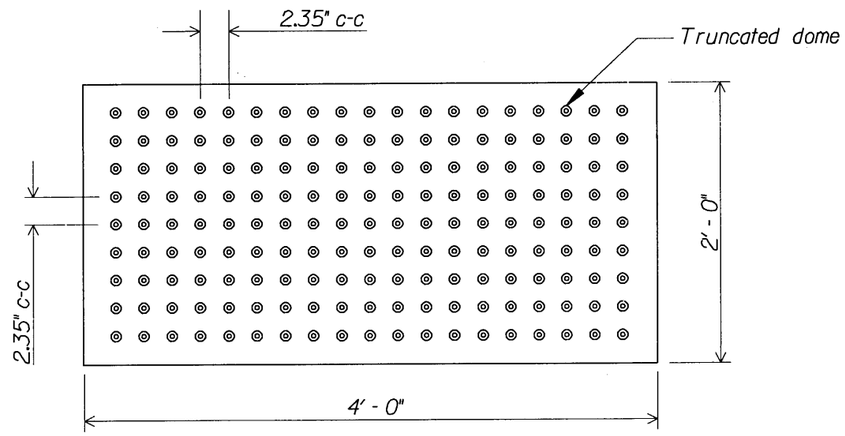

PLAN

DETECTABLE WARNING SURFACE

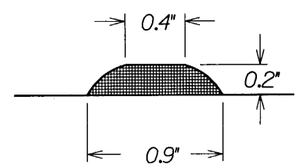

SECTION
TRUNCATED DOME

NOT TO SCALE

U.S. DEPARTMENT OF TRANSPORTATION
FEDERAL HIGHWAY ADMINISTRATION
EASTERN FEDERAL LANDS HIGHWAY DIVISION

DETAIL

WHEEL CHAIR RAMP
CURB RETURN

DETAIL APPROVED FOR USE XX/XX

REVISED: XX/XX

DETAIL
E615-5

10/23/2006 9:54:04 AM M:\Projects\vlis\st_crolx\nh66(008)proj_dev\Contract 2\details\dt615x05.dgn

REG	STATE	PROJECT	SHEET NO.	TOTAL SHEETS
SE	VI	NH 66(008)	M68	193

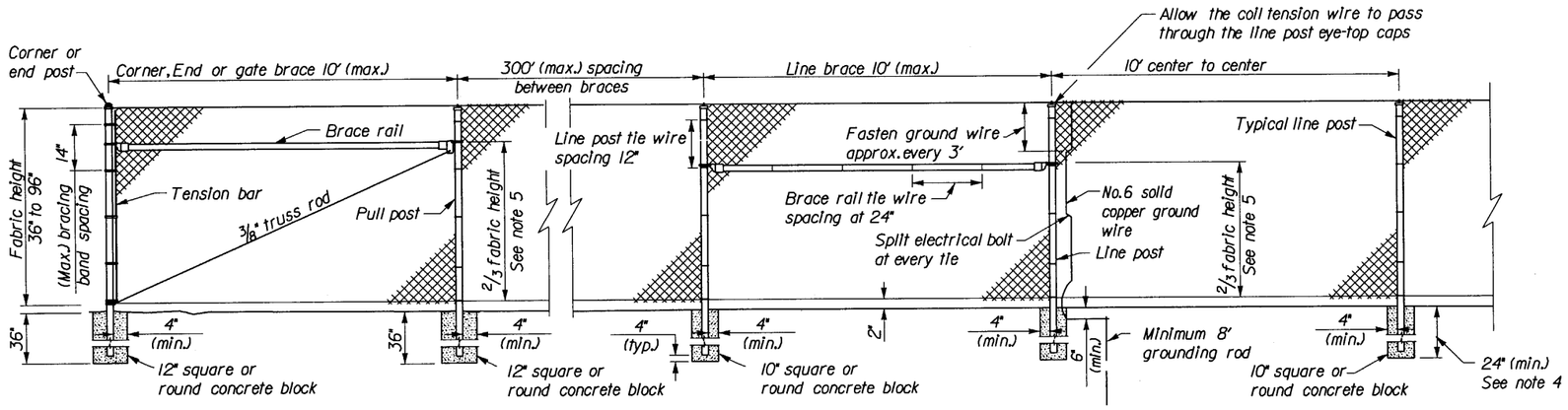

CHAIN LINK FENCE

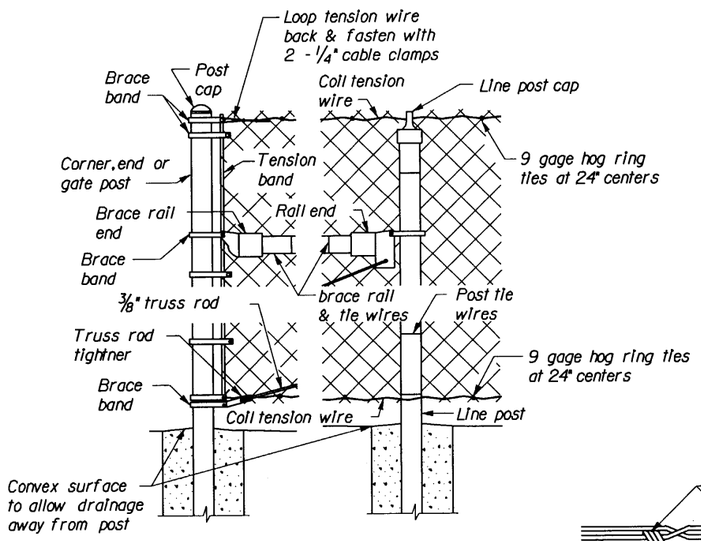

CHAIN LINK DETAIL

CHAIN LINK FENCE POST SIZE AND WEIGHT TABLE											
DESCRIPTION	FENCE TYPE	ROUND PIPE				HOT ROLLED H-SHAPE				ROLLED FORMED	
		Steel		Aluminum		Steel		Steel		Steel	
		Minimum yield strength Psi.									
		25,000		25,000		50,000		45,000		45,000	
		Size and mass									
		dia. inch	mass lbs/ft	dia. inch	mass lbs/ft	dia. inch	mass lbs/ft	dia. inch	mass lbs/ft	dia. inch	mass lbs/ft
Brace rail & top rail	Type 1	1.66	2.27	1.660	0.786	1.66	1.40	---	---	1 1/4 x 1 5/8	1.40
	Type 2	1.66	1.82	---	---	1.66	1.40	---	---	1 1/4 x 1 5/8	1.40
Line post	Type 1	2.375	3.65	2.375	1.264	2.375	3.12	2 1/4 x 1 45/64	3.26	2 1/4 x 1 5/8	2.70
	Type 2	2.375	2.96	---	---	2.375	2.31	---	---	1 7/8 x 1 5/8	2.26
End, corner & pull post	Type 1	2.875	5.79	2.875	2.004	2.875	4.64	---	---	3 1/2 x 3 1/2	5.10
	Type 2	2.875	4.69	---	---	2.875	3.25	---	---	3 1/2 x 3 1/2	5.10

NOTE:

1. Metal post and rails shall conform to ASTM F 669.
2. Use Type I requirements from the chain link fence table unless otherwise specified in the special contract requirements.
3. Set all posts in concrete. Set corner, end, pull posts to the dimensions shown. The minimum depth of concrete for line posts is 24". Increase depth 3" for each additional foot of fence height over 4 feet.
4. Install braces on all terminals on fences without a top rail. No braces are required on fabric 6 feet in height or less where a top rail is specified. Install braces where fabric is over 6 feet in height. Where a top rail is used, attach the brace at the halfway point of the terminal post above grade and, where the rail is omitted, at the two-thirds point above grade. Do not install top rail unless so specified in the special contract requirements.
5. Adjust the post top elevations to provide a smooth visual fence profile. Install corner posts at horizontal breaks in the fence of 15° or more.
6. If alternate steel posts are used, provide fastening bands, caps, brace rail, rail ends, and truss rod attaching hardware compatible with the post sizes and styles selected.
7. Provide fence fabric with a 2" mesh. Use 11 gage wire in fabric heights of 48 inches or less and 9 gage wire in fabric heights greater than 48 inches. Provide a Class D coating when zinc-coated steel fence fabric is provided. Knuckle both selvages on fabric less than 72 inches high. For fabic 72 inches high or higher, knuckle one selvage and twist the other.
8. See Detail E619-10 for hardware and gate requirements.

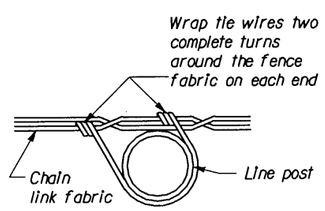

CHAIN LINK FENCE TIE DETAIL

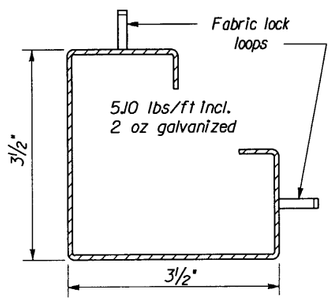

END OR CORNER POST

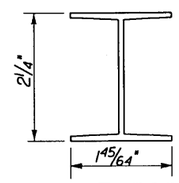

LINE POST

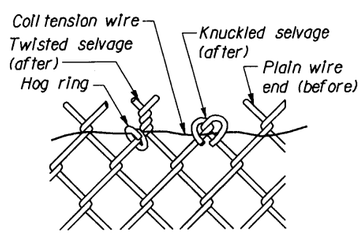

WIRE SELVAGE DETAIL

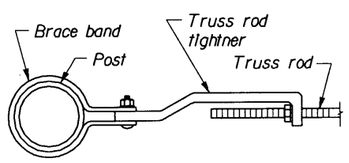

TRUSS ROD TIGHTNER DETAIL

2.08 kg/m incl.
2 oz galvanized

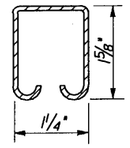

TOP & BRACE RAIL

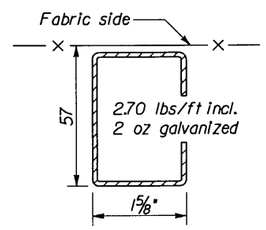

LINE POST

ALTERNATE STEEL POST & BRACE SECTIONS

NO SCALE

U.S. DEPARTMENT OF TRANSPORTATION
FEDERAL HIGHWAY ADMINISTRATION
EASTERN FEDERAL LANDS HIGHWAY DIVISION

DETAIL

CHAIN LINK FENCE

DETAIL APPROVED FOR USE --/----

REVISED:

DETAIL E619-09

10/19/2006 1:11:49 PM M:\Projects\vlls\st_crak\nh66(008)\proj_dev\Contract 2\details\d1619x09.dgn

REG	STATE	PROJECT	SHEET NO.	TOTAL SHEETS
SE	VI	NH 66(008)	M69	193

HARDWARE ITEM DESCRIPTION	STANDARD REQUIREMENTS
Brace rail and top rail	See table on Detail W619-09
Line post	See table on Detail W619-09
Corner, end and pull posts	See table on Detail W619-09
Post cap	Cast non-ferrous alloy or galvanized pressed steel cap must fit snuggly on post and gate top
Line post cap	Galvanized pressed steel minimum 3/32" thickness or galvanized mallable ferrous alloy
Tension band	Minimum 1/8" x 3/4" galvanized steel
Brace band	Minimum 1/8" x 3/4" galvanized steel
Band bolt	Minimum 3/8" x 1 3/4" galvanized carriage bolt. (Lock washer & flat washer for each band)
Rail end	Galvanized pressed steel or galvanized mallable ferrous alloy minimum 3/8" thickness on back bolting appendage
Brace rail end	Galvanized pressed steel or galvanized mallable ferrous alloy minimum 3/8" thickness on back bolting appendage
Truss rod tightner	Minimum 3/8" formed galvanized steel
Truss rod	3/8" galvanized, nc threaded rod, lock washer, & flat washer with two 90° bends opposite of threaded end
Top rail sleeve	Galvanized steel 0.051" minimum thickness by 6" minimum length
Tension bar	Minimum 3/16" x 3/4" galvanized steel
Fence fabric	2" diamond mesh fabric, See note no.7 on Detail W619-09
Tie wires	Minimum 9 gage aluminum with one hooked end
Coil tension wire	0.177" minimum diameter metallic coated wire
Gate latch	Minimum 1/8" galvanized pressed steel or mallable ferrous alloy. 1 latch per each single gate with bent minimum 3/8" attachment bolt, washer & nut.
Frame hinge (Fence side / Gate side)	Minimum 1/8" galvanized pressed steel with 2 - 3/8" U-bolts, lockwasher & nuts per hinge. Use 2 hinges per gate leaf up to 8' in width and 3 hinges per gate leaf widths greater than 8'.
Drop rod latch & guide (1/4")	Minimum 1/8" galvanized pressed steel. Drop rod guide includes 3/8" x 3" carriage bolt with lock washer & nut. Weld drop rod fork to rod & paint with an approved zinc rich paint.

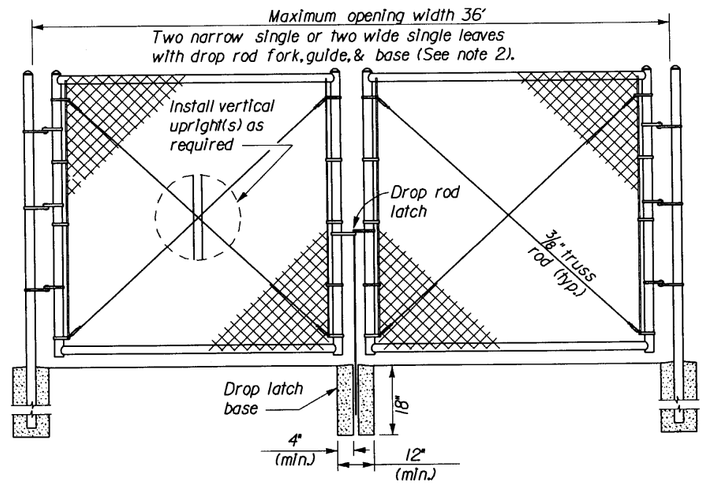

DOUBLE LEAF GATE

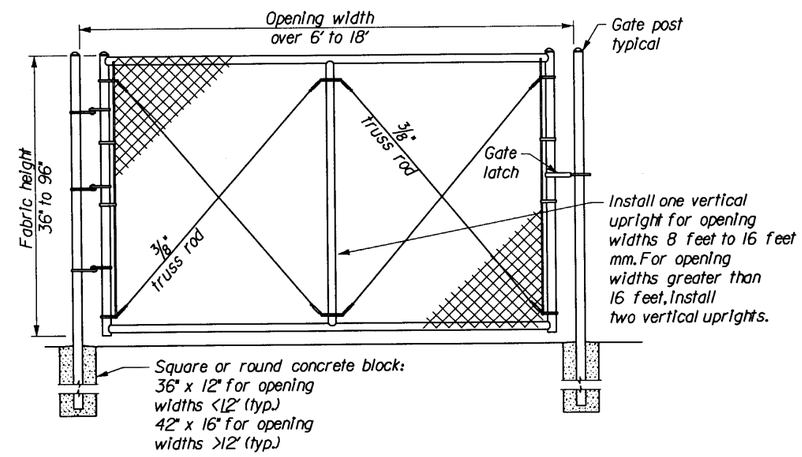

WIDE SINGLE LEAF GATE

CHAIN LINK GATE							
POST AND FRAME SIZE AND WEIGHT TABLE							
GATE LEAF WIDTHS		ROUND PIPE					
		Steel		Aluminum		Steel	
		Minimum yield strength Psi.					
		25,000		25,000		50,000	
		Size and mass					
		dia. inch	lb/ft (min.)	dia. inch	lb/ft (min.)	dia. inch	lb/ft (min.)
6 feet or less	Gate	2.875	4.64	2.875	1.94	2.875	4.64
Over 6 feet to 12 feet	post	4.000	8.65	4.000	2.99	4.000	6.56
Over 12 feet to 18 feet	size	6.625	18.02	---	---	---	---
Outside frame member	frame	1.900	2.28	1.900	0.91	1.900	2.28
Interior bracing member	size	1.660	1.83	1.900	0.91	1.660	1.84

NOTE:

1. Reinforce the gate frame corners with a malleable iron or pressed steel fitting designed for the purpose or shop weld the corners. Grind smooth all welds and paint with an approved zinc rich paint. Furnish each gate with the necessary hinges, latch, and drop rod locking device designed for the type of gate posts and gate used on the project. Provide positive type latching devices with provisions for pad locking at all gates. Provide keepers to retain the gate in the open position.
2. Approved alternate gate frames constructed of steel sections, other than pipe, may be used.
3. The design of the chain link hardware may vary from the details shown, however, all hardware and materials used in a single installations shall be uniform and compatible.

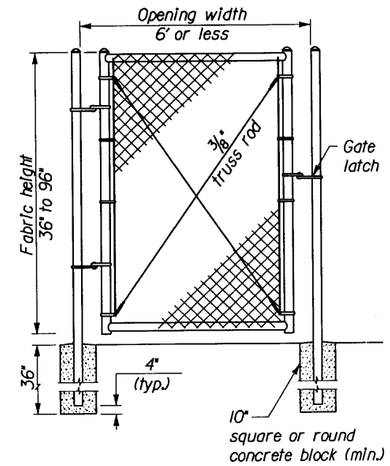

NARROW SINGLE LEAF GATE

NO SCALE

U.S. DEPARTMENT OF TRANSPORTATION
FEDERAL HIGHWAY ADMINISTRATION
EASTERN FEDERAL LANDS HIGHWAY DIVISION

DETAIL

CHAIN LINK HARDWARE AND GATE

DETAIL APPROVED FOR USE --/----

REVISED:

DETAIL E619-10

10/19/2006 1:15:57 PM M:\Projects\Wlfs\st_croix\nh66(008)\proj_dev\Contract 2\details\dt619x10.dgn

REG	STATE	PROJECT	SHEET NO.	TOTAL SHEETS
SE	VI	NH 66(008)	M70	193

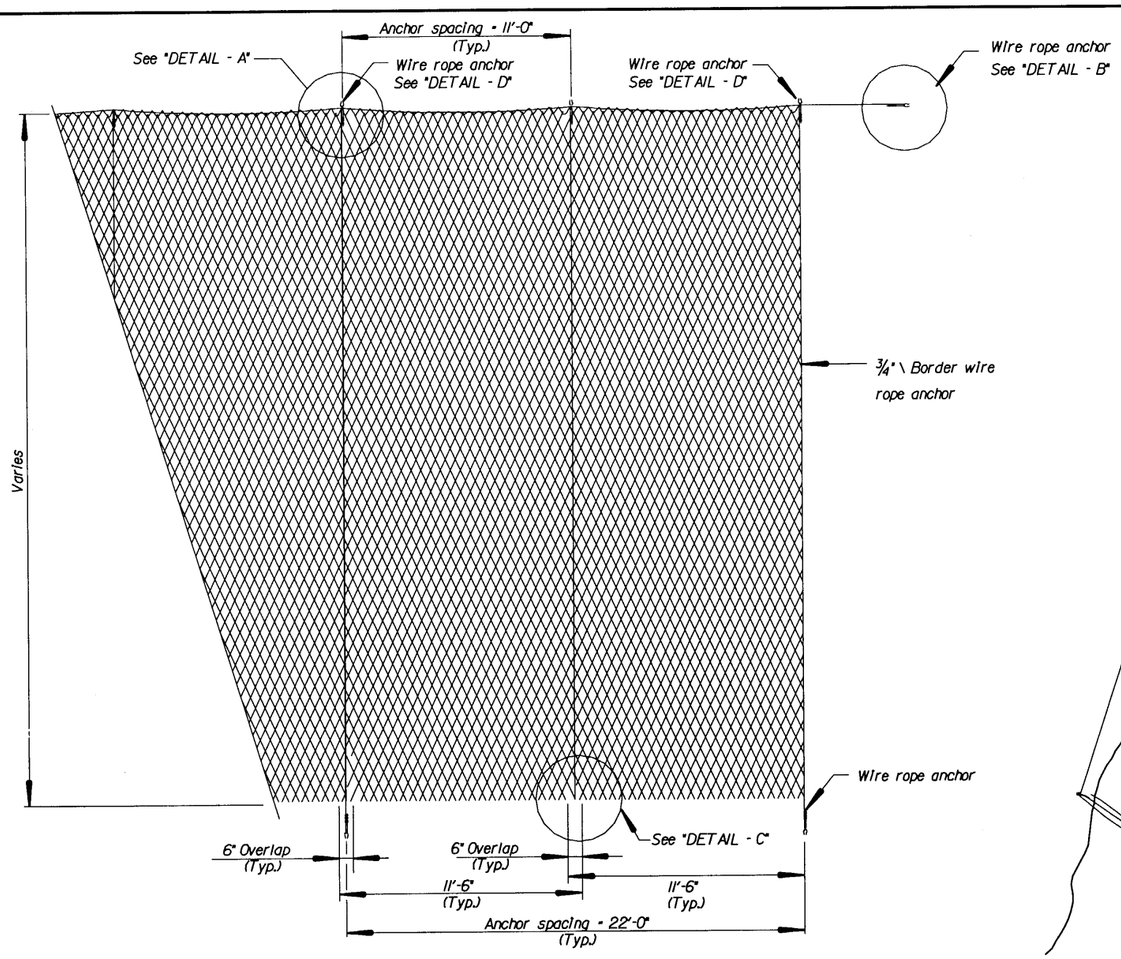

ELEVATION VIEW

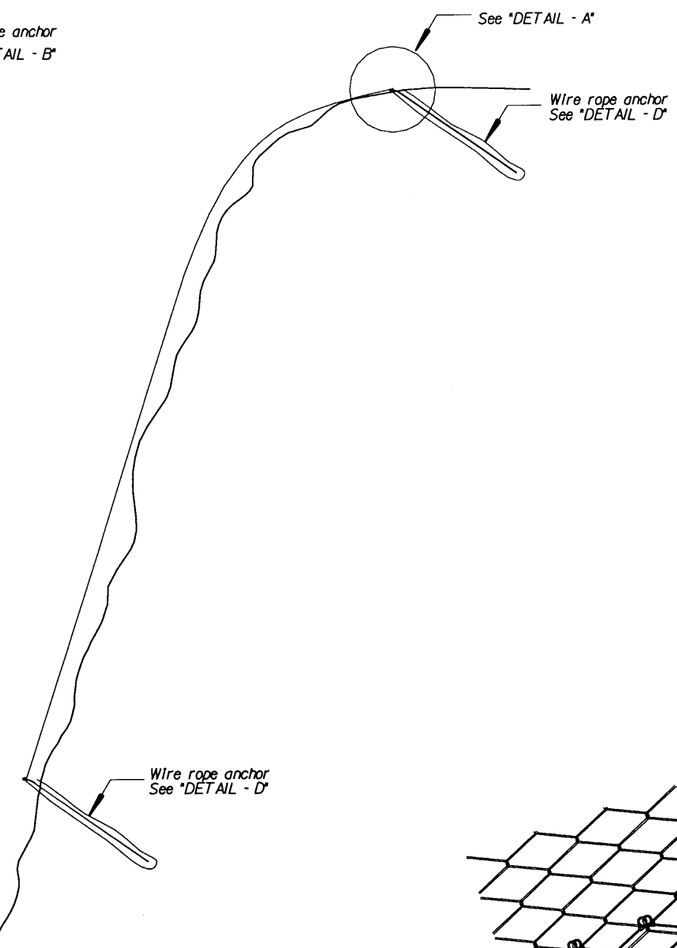

TYPICAL SECTION

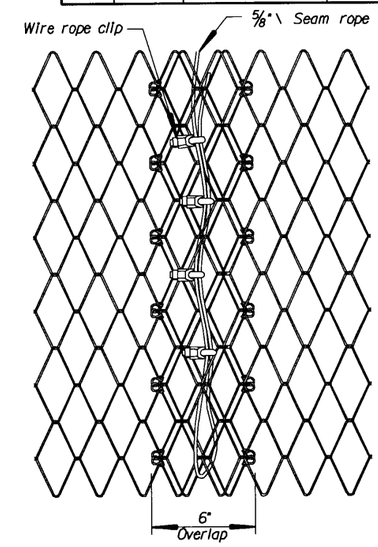

DETAIL - C

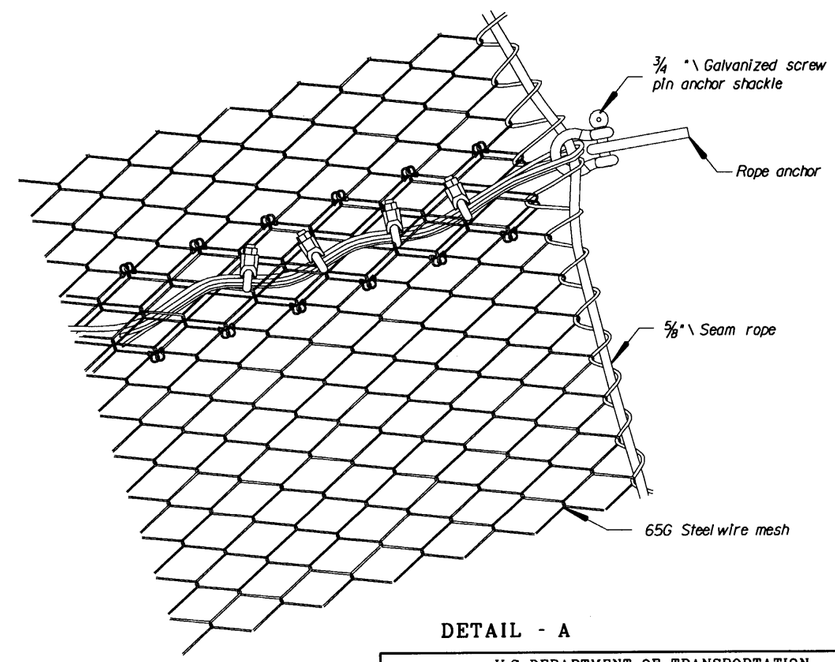

DETAIL - A

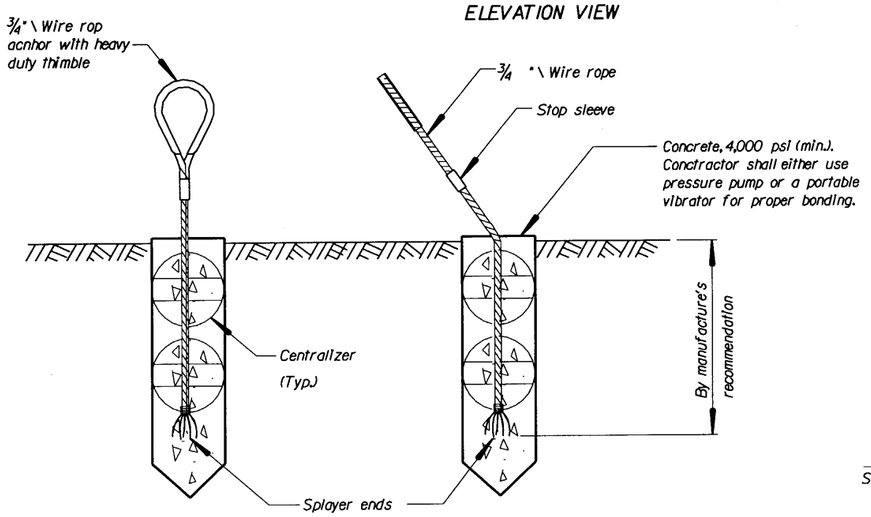

DETAIL - D
(Wire rope anchor detail or equivalent)

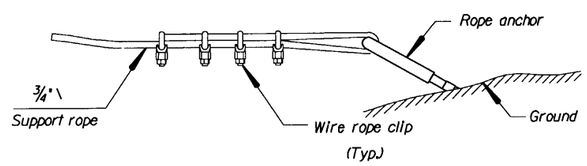

DETAIL - B

Note:

The contractor shall submit manufacture's detail shop drawings and installation procedures of the proposed Fence, Rock Fall Netting system, or equivalent, to CO for approval prior to purchase.

U.S. DEPARTMENT OF TRANSPORTATION
FEDERAL HIGHWAY ADMINISTRATION
EASTERN FEDERAL LANDS HIGHWAY DIVISION

DETAIL

CHRISTIANSTED BY-PASS

FENCE, ROCK FALL NETTING DETAILS

DETAIL APPROVED FOR USE --/----

REVISED:

DETAIL 619-A

10/19/2006 7:32:43 AM:\Projects\Vi\st_oral\x\nh66(008)\proj_dev\Contract 2\details\Rockfall Net.dgn

REG	STATE	PROJECT	SHEET NO.	TOTAL SHEETS
SE	VI	NH 66(008)	M71	193

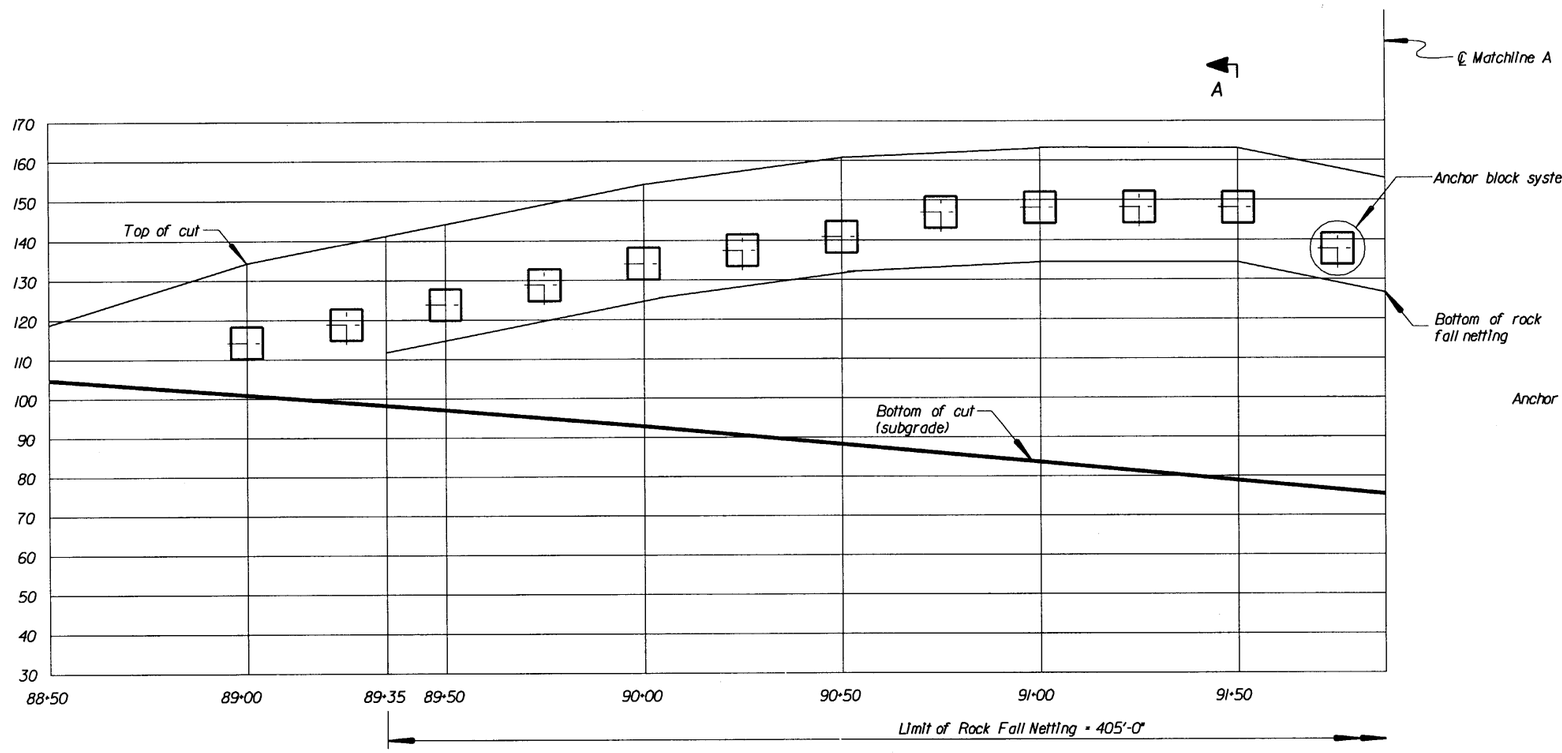

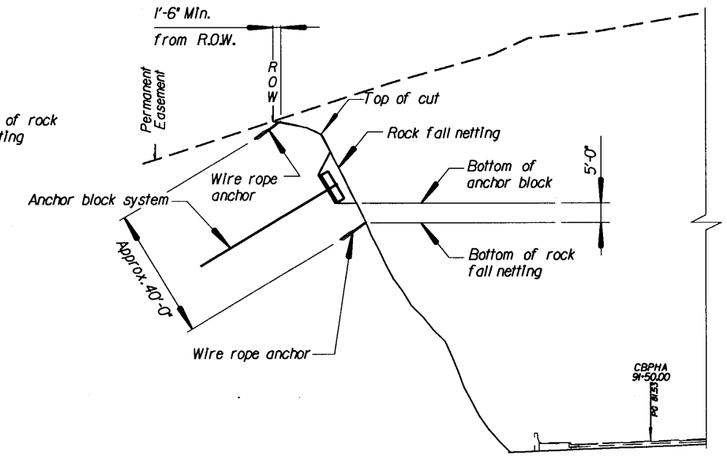

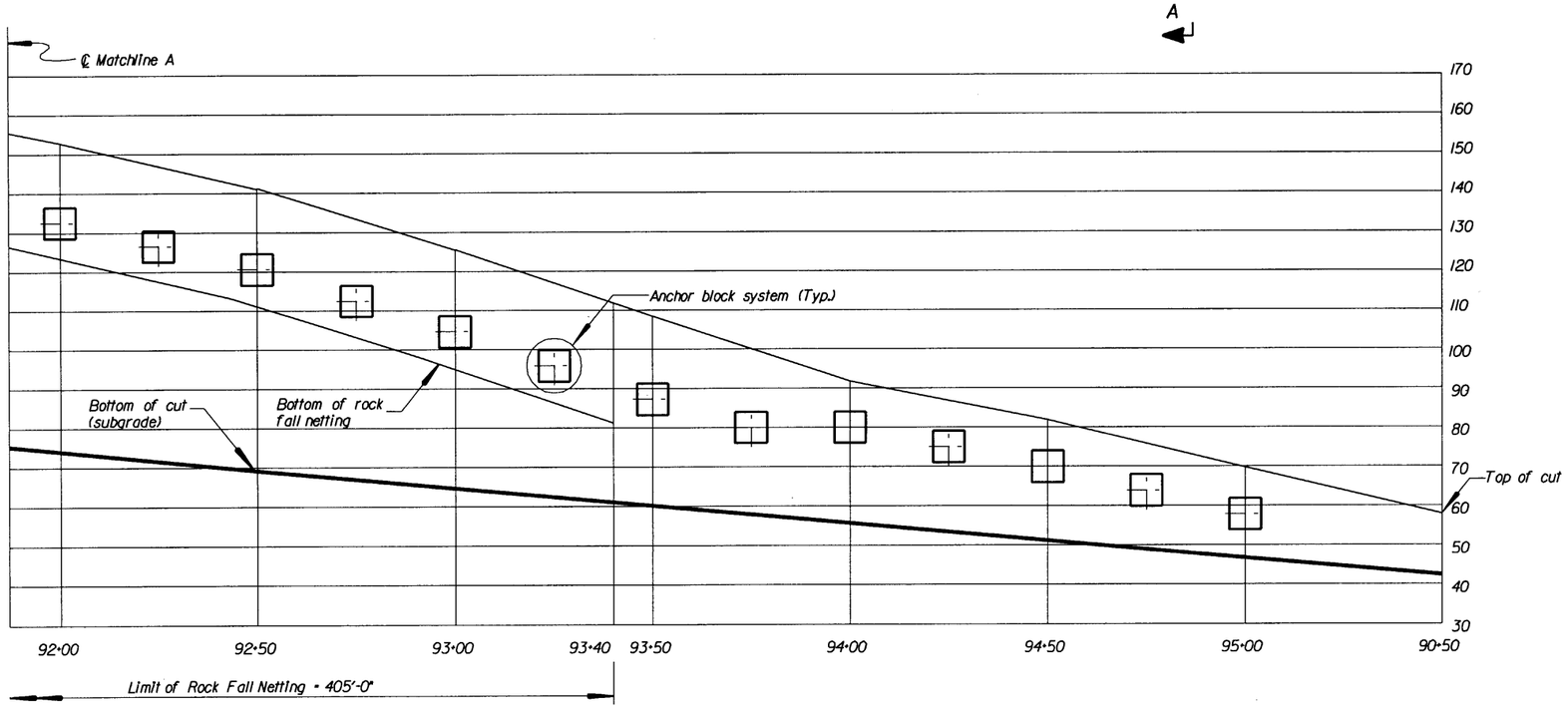

LEFT PROFILE OF CUT SLOPE - B

ESTIMATED QUANTITIES	
PER RIGHT PROFILE OF CUT SLOPE B	
Fence, Rock Fall Netting	16,200 SQFT

Notes:

1. Install "Fence, Rock Fall Netting" in according with manufacture's recommendations.

2. See "FENCE, ROCK FALL NETTING DETAILS" sheet for additional information and details.

U.S. DEPARTMENT OF TRANSPORTATION
FEDERAL HIGHWAY ADMINISTRATION
EASTERN FEDERAL LANDS HIGHWAY DIVISION

DETAIL
CHRISTIANSTED BY-PASS
ROCK FALL NETTING AT
CUT SLOPE - B (LEFT)
STA. 90+00 TO STA. 95+00

DETAIL APPROVED FOR USE --/----

REVISED:

DETAIL
619-B

10/20/2006 3:09:56 PM:\Projects\vlis\st_croix\nh66(008)\proj_dev\Contract 2\details\cut options.dgn

REG	STATE	PROJECT	SHEET NO.	TOTAL SHEETS
SE	VI	NH 66(008)	M72	193

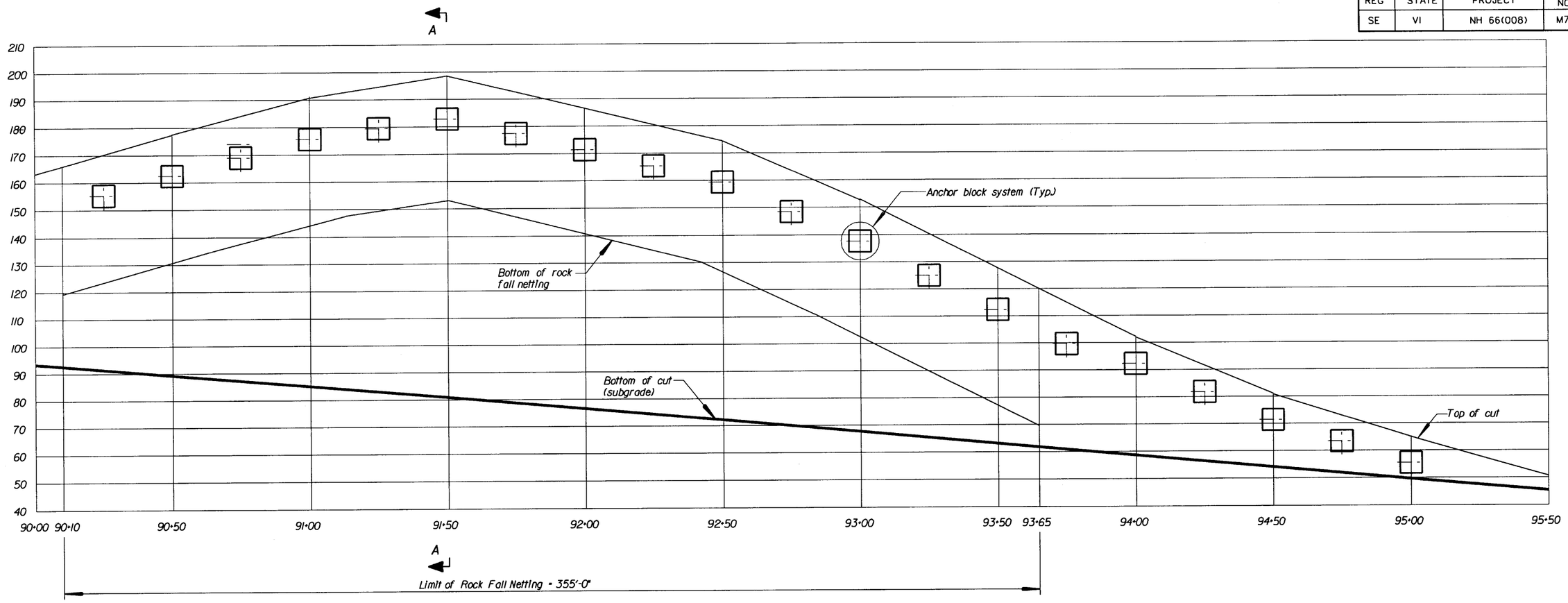

RIGHT PROFILE OF CUT SLOPE - B

ESTIMATED QUANTITIES	
PER RIGHT PROFILE OF CUT SLOPE B	
Fence, Rock Fall Netting	17,750 SQFT

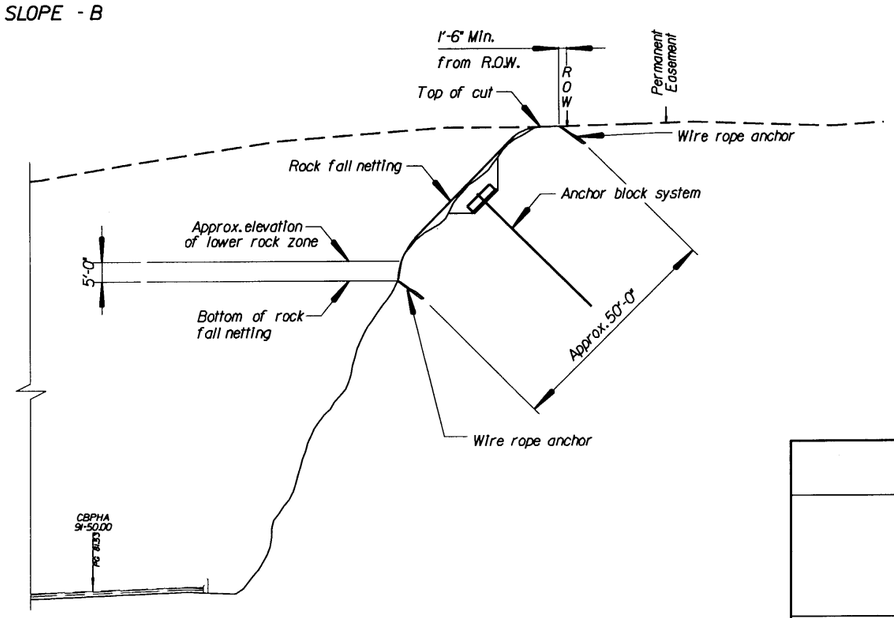

TYPICAL SECTION (SECTION A-A SHOWN)

Notes:

1. Install "Fence, Rock Fall Netting" in according with manufacture's recommendations.

2. See "FENCE, ROCK FALL NETTING DETAILS" sheet for additional information and details.

U.S. DEPARTMENT OF TRANSPORTATION
FEDERAL HIGHWAY ADMINISTRATION
EASTERN FEDERAL LANDS HIGHWAY DIVISION

DETAIL

CHRISTIANSTED BY-PASS
ROCK FALL NETTING AT
CUT SLOPE - B (RIGHT)
STA. 90+00 TO STA. 95+50

DETAIL APPROVED FOR USE --/----

REVISED:

DETAIL
619-B

10/17/2006 5:20:14 PW:\Projects\vlls\st_crolx\nh66(008)\proj_dev\Contract 2\details\cut options.dgn

REG	STATE	PROJECT	SHEET NO.	TOTAL SHEETS
SE	VI	NH 66(008)	M73	193

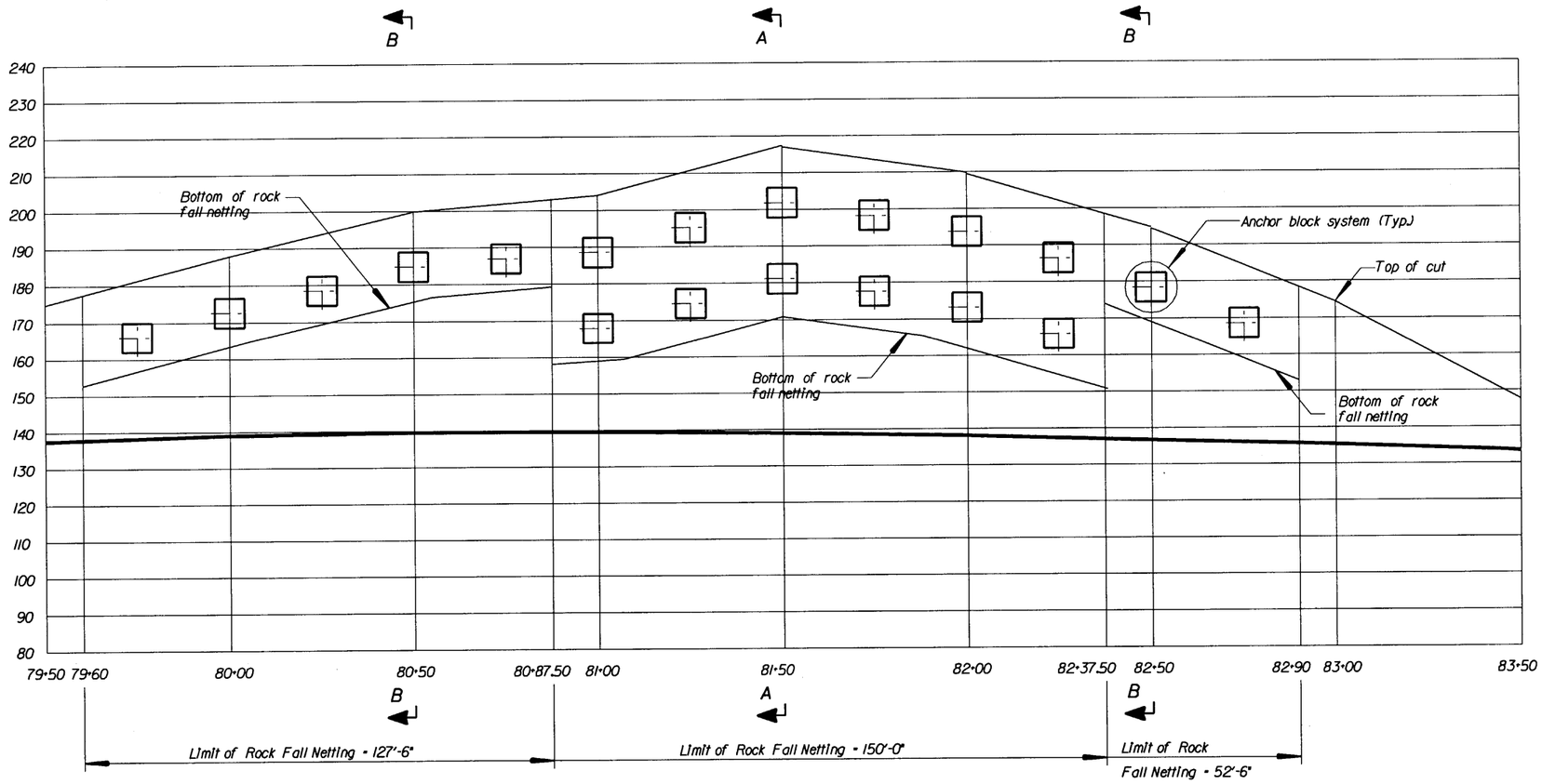

RIGHT PROFILE OF CUT SLOPE - C

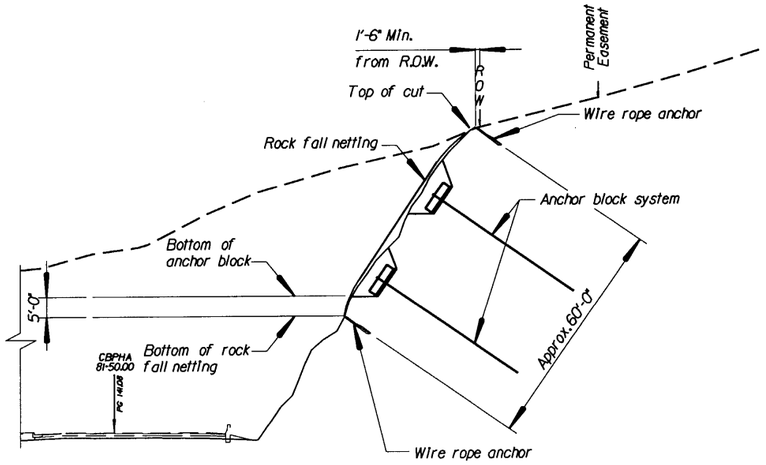

TYPICAL SECTION (SECTION A-A SHOWN)

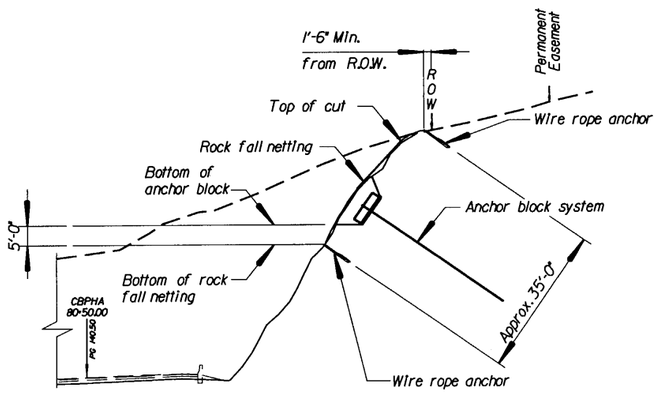

TYPICAL SECTION (SECTION B-B SHOWN)

ESTIMATED QUANTITIES	
PER RIGHT PROFILE OF CUT SLOPE C	
Fence, Rock Fall Netting	15,300 SQFT

Notes:

1. Install "Fence, Rock Fall Netting" in according with manufacture's recommendations.

2. See "FENCE, ROCK FALL NETTING DETAILS" sheet for additional information and details.

U.S. DEPARTMENT OF TRANSPORTATION
FEDERAL HIGHWAY ADMINISTRATION
EASTERN FEDERAL LANDS HIGHWAY DIVISION

DETAIL

CHRISTIANSTED BY-PASS
ROCK FALL NETTING AT
CUT SLOPE - C (RIGHT)
STA. 79+50 TO STA. 83+50

DETAIL APPROVED FOR USE --/----

REVISED:

DETAIL
619-C

10/17/2006 5:20:03 FHWA Projects\vi\st_crd\x\nh66(008)\proj_dev\Contract 2\details\cut options.dgn

REG	STATE	PROJECT	SHEET NO.	TOTAL SHEETS
SE	VI	NH-66(008)	M74	193

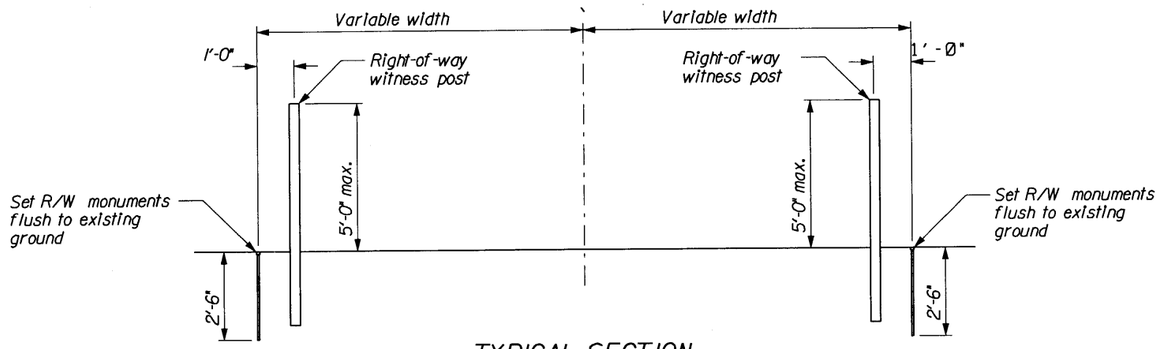

TYPICAL SECTION
RIGHT-OF-WAY MONUMENTATION

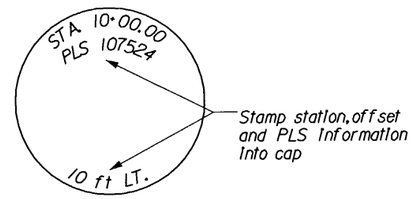

CAP DETAIL

NOTE:

1. Right-of-Way Witness Post:
   Set a 6 ft long flexible plastic post. Right-of-Way witness posts should be brown, green or other suitable colors to match surroundings. Attach a "Survey Marker Witness" plaque to the post. Station, offset and PLS date of survey should be permanently attached to the front of the post facing the designed alignment.
2. Witness post to be used when Right-of-Way witness post assembly is required.
3. Set monuments using a professional land surveyor according to the requirements of the state code.
4. Station and distances based on Right-of-Way centerline.
5. Install markers so that the center of the cap is not more than 1/2" from the point established.

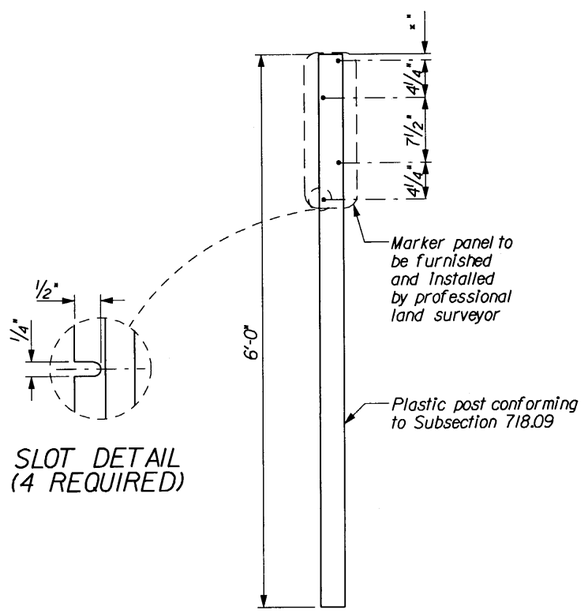

SLOT DETAIL
(4 REQUIRED)

RIGHT-OF-WAY WITNESS POST
ASSEMBLY DETAIL

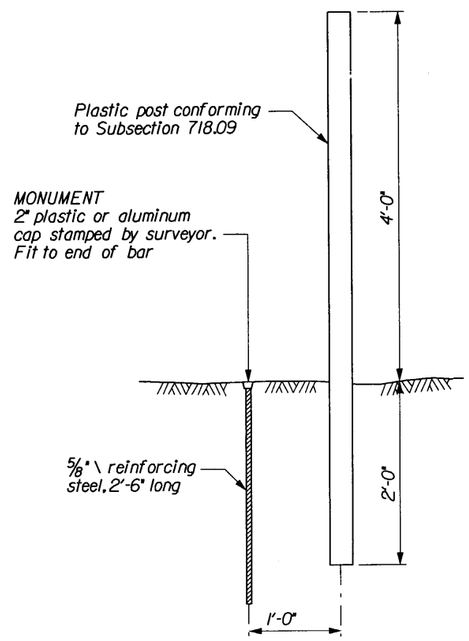

RIGHT-OF-WAY MONUMENT
AND WITNESS POST
EARTH INSTALLATION

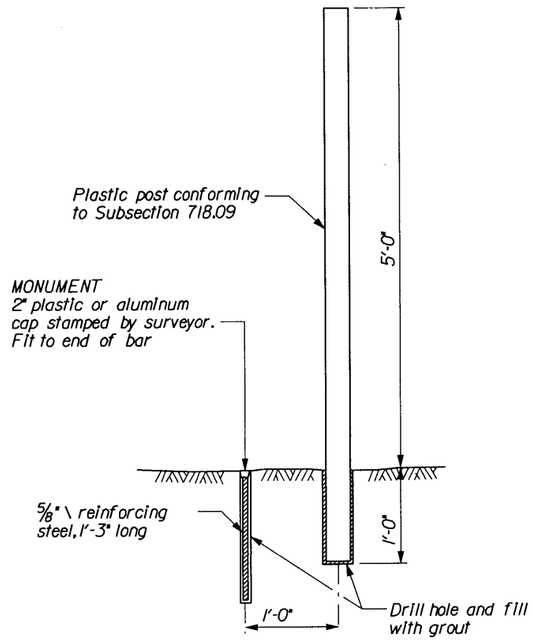

RIGHT-OF-WAY MONUMENT
AND WITNESS POST
SOLID ROCK INSTALLATION

U.S. DEPARTMENT OF TRANSPORTATION
FEDERAL HIGHWAY ADMINISTRATION
EASTERN FEDERAL LANDS HIGHWAY DIVISION

DETAIL

RIGHT-OF-WAY
MONUMENTATION

DETAIL APPROVED FOR USE 5/2003

REVISED:

DETAIL
E621-1

10/19/2006 7:54:17 AM M:\Projects\vlis\st_croix\nh66\008\proj_dev\Contract 2\details\dt621-01.dgn

REG	STATE	PROJECT	SHEET NO.	TOTAL SHEETS
SE	VI	NH-66(008)	M75	193

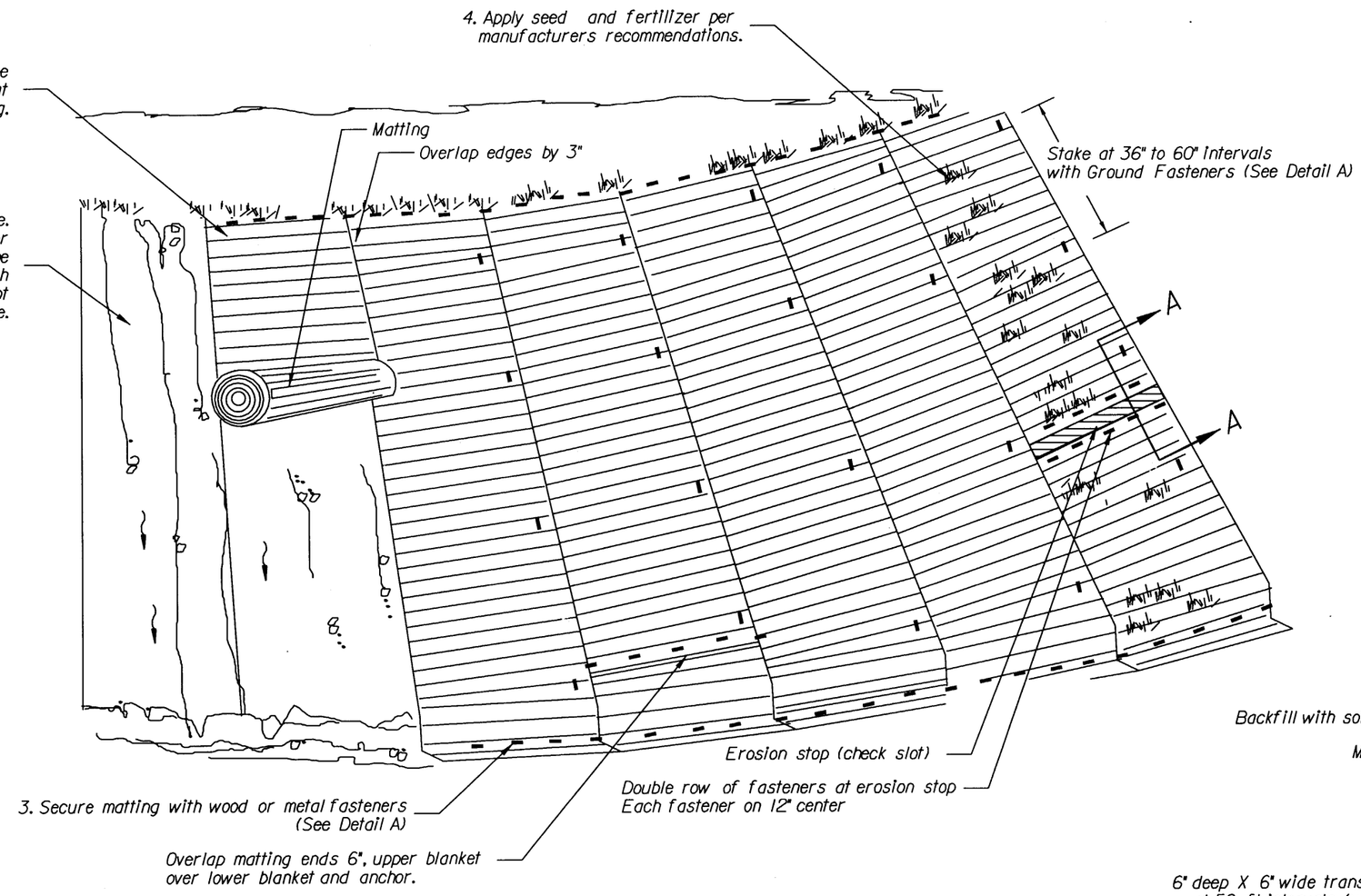

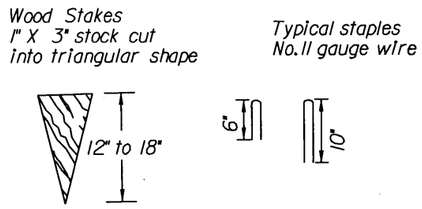

DETAIL A
Typical Ground Fasteners

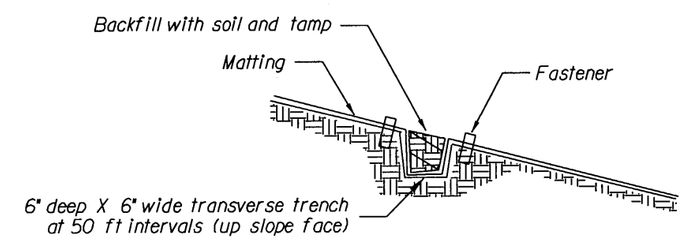

SECTION A-A
Erosion Stop (Check Slot) Detail

DETAIL FOR STABILIZING SLOPES WITH MATTING

NO SCALE

U.S. DEPARTMENT OF TRANSPORTATION
FEDERAL HIGHWAY ADMINISTRATION
EASTERN FEDERAL LANDS HIGHWAY DIVISION

DETAIL

SLOPE STABILIZATION WITH MATTING

DETAIL APPROVED FOR USE --/----

REVISED:

DETAIL
E629-1

10/18/2006 5:12:19 PM M:\Projects\vlts\st_croix\nh66\008\proj_dev\Contract 2\details\Details\2.dgn

REG	STATE	PROJECT	SHEET NO.	TOTAL SHEETS
SE	VI	NH-66(008)	M76	193

Install matting along the bottom of all ditches and up the side slopes as follows:

Step 1: Bury the top end of the mat strip in a trench 6" or more in depth.

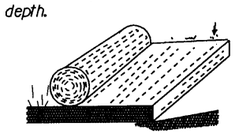

Step 2: Tamp the trench full of soil. Secure with row of fasteners: 6" spacing, 4" down from the trench.

Step 3: Overlap- bury upper end of lower strip as in (1) and (2). Overlap end of top strip 4" and fasten.

Step 4: Erosion stop (check slot): Every 50 ft, bury fold of mat in slit trench and tamp; fasten with double row of fasteners. See Section A-A

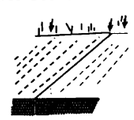

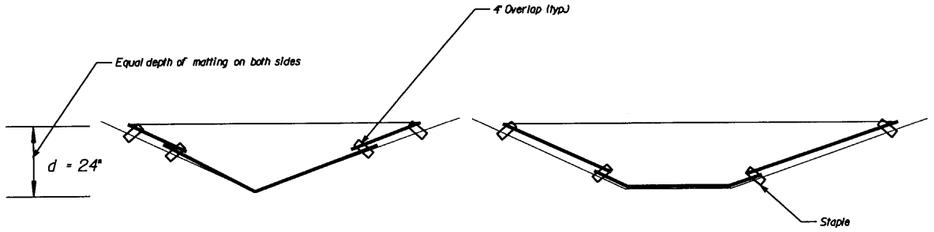

CROSS SECTION THROUGH V AND FLAT BOTTOM DITCHES

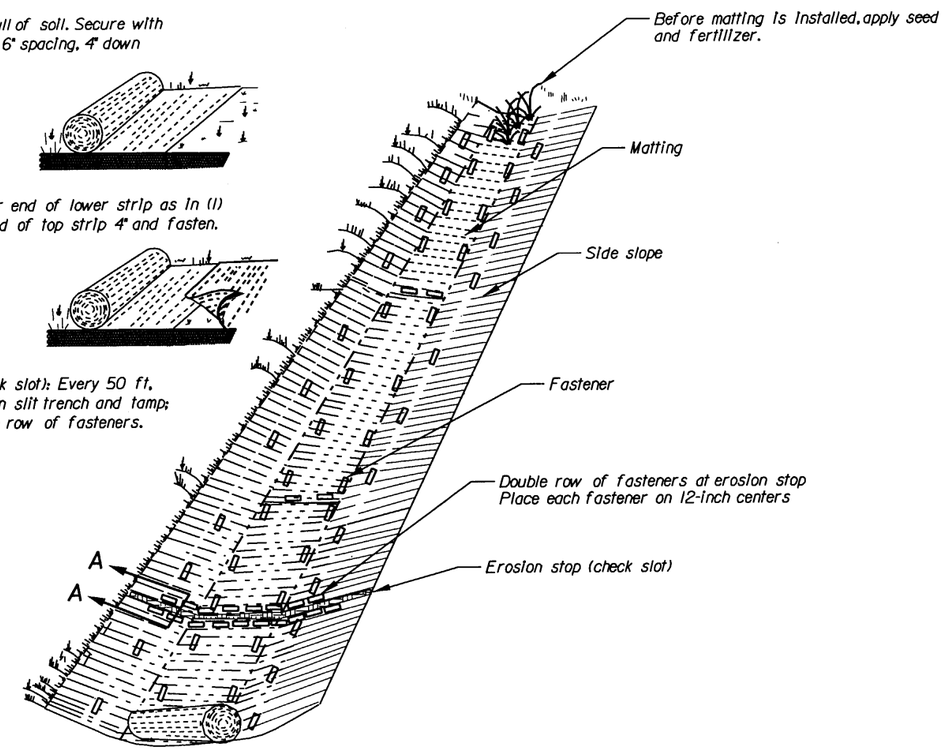

DETAIL FOR PERMANENTLY STABILIZING DITCHES WITH MATTING

NOTE:

1. Apply seed, fertilizer, and mulch, as directed in the plans and special contract requirements, before placing matting.

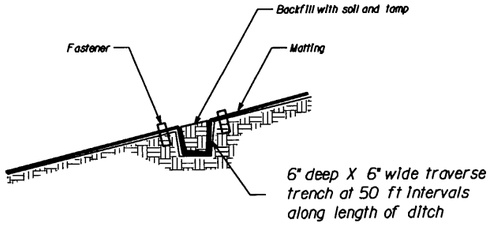

SECTION A-A
Erosion Stop (Check Slot) Detail

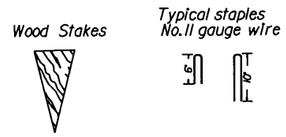

DETAIL A
Typical Ground Fasteners

NO SCALE

U.S. DEPARTMENT OF TRANSPORTATION
FEDERAL HIGHWAY ADMINISTRATION
EASTERN FEDERAL LANDS HIGHWAY DIVISION

DETAIL

DITCH STABILIZATION WITH MATTING

DETAIL APPROVED FOR USE --/----

REVISED: 08/00

DETAIL E629-2

10/18/2006 5:13:51 PM M:\Projects\vlls\st_croix\nh66(008)proj_dev\Contract 2\details\Details\V2.dgn

REG	STATE	PROJECT	SHEET NO.	TOTAL SHEETS
SE	VI	NH-66(008)	M77	193

ROADSIDE SIGN RURAL DISTRICT NO SHOULDER

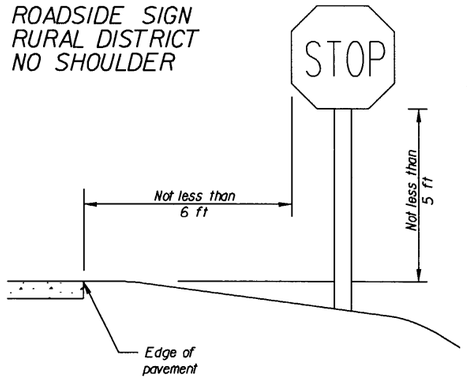

WARNING SIGN WITH ADVISORY SPEED PLAQUE RURAL DISTRICT

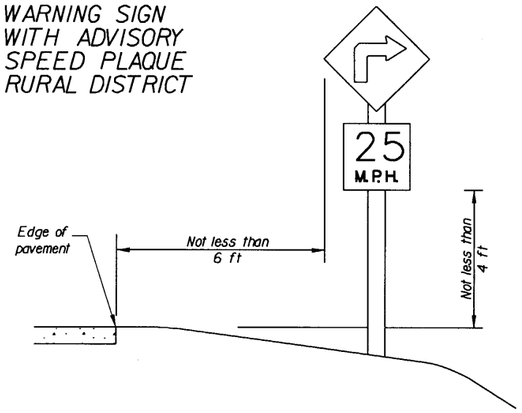

ROADSIDE SIGN BUSINESS OR RESIDENCE DISTRICT

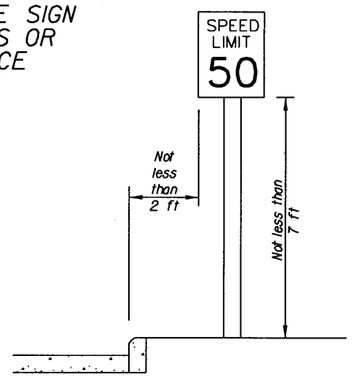

ROADSIDE SIGN RURAL DISTRICT WITH SHOULDER

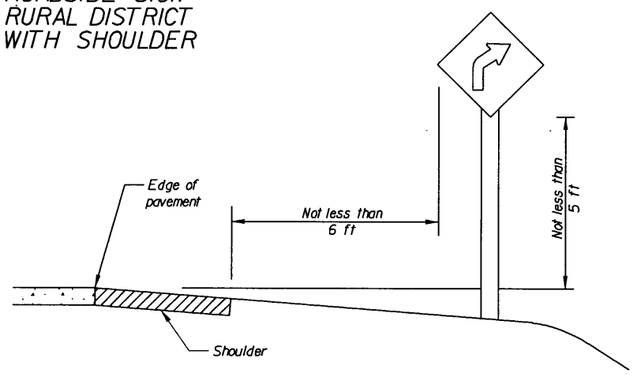

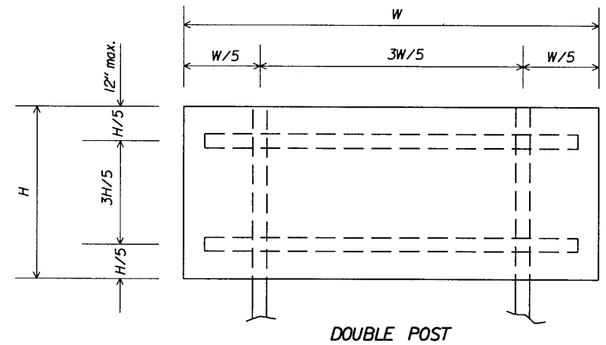

DOUBLE POST

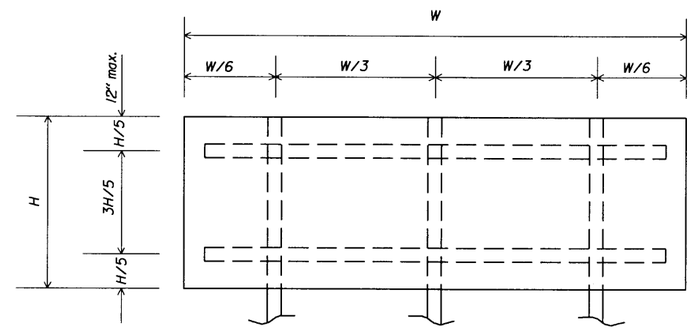

TRIPLE POST

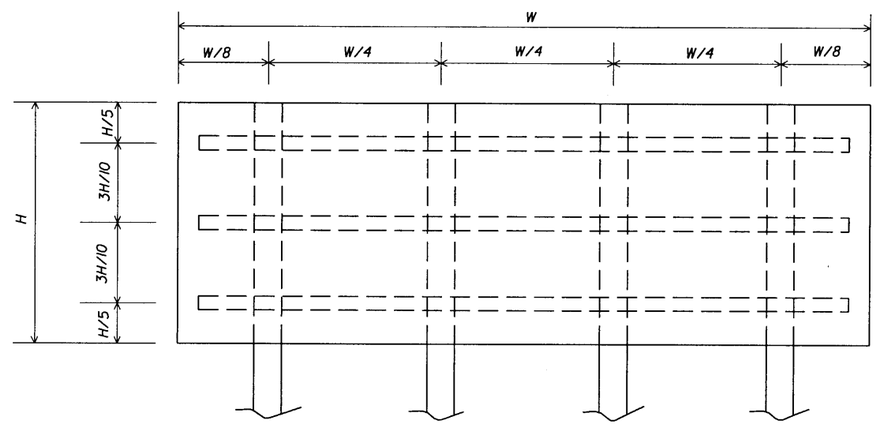

QUADRUPLE POST

Notes:

1. Locations and height to be in accordance with the 'Manual on Uniform Traffic Control Devices for Streets and Highways' (MUTCD), latest edition.
2. Use wood battens bolted to post at vertical spacings not to exceed 30-inches.
3. Use double posts if W is over 3 feet.
4. For sign punching details, see the blank standards in the "Standard Highway Signs" as specified in the MUTCD, latest edition.
5. For steel posts, provide a 1/4" x 6" soil plate. Use the same type of steel for the soil plate as for the post. Soil plate is not required for breakaway design.
6. For signs requiring posts sizes 6 x 6 and greater, signs are considered to be non-breakaway if multiple posts are required and posts cannot be spaced a minimum of 7 feet apart. Place non-breakaway signs outside the clearzone or shield with approved barrier. Do not place holes in posts of non-breakaway signs.
7. Depth, D, is to be in accordance with the 'Manual on Uniform Traffic Control Devices for Streets and Highways' (MUTCD), latest edition, Section 2A.21 and the AASHTO manual 'Specifications for Structural Supports for Highway Signs, Luminaires, and Traffic Signals', latest edition or as directed by the CO. D (min) is given in CHART A.

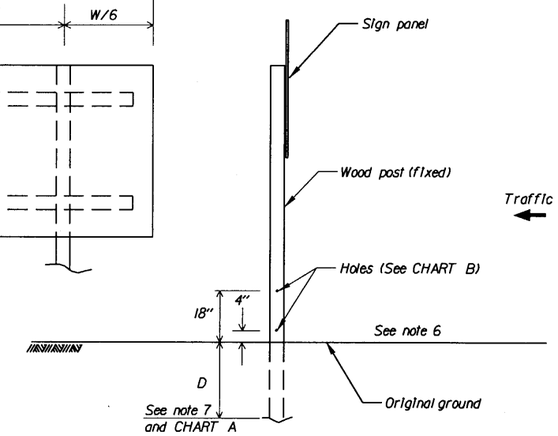

BREAKAWAY SUPPORT DETAIL

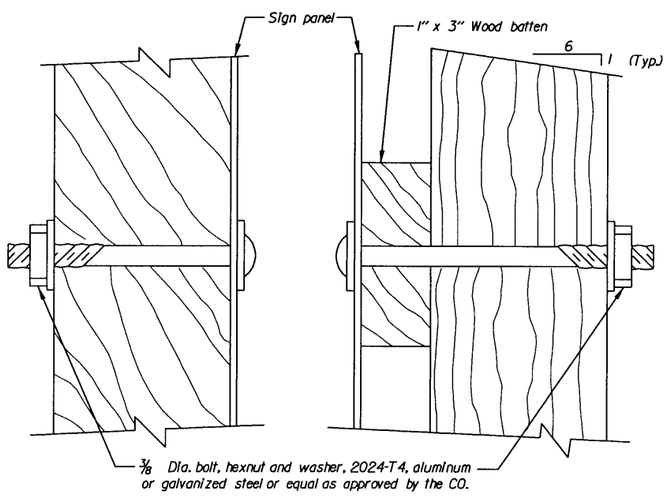

WITHOUT BATTEN

WITH BATTEN

FASTENER DETAIL

CHART B	
Post Size	Hole Diameter
4" x 4"	None Required
4" x 6"	1.5"
6" x 6"	2"
6" x 8"	3"

CHART A					
Post Size (Inch)	D (min) *	Maximum Sign Area (sq. ft.)			
		Single Post	Double Post	Triple Post	Quadruple Post
4 x 4 (Wood)	3'	10	20	X	X
4 x 6 (Wood)	4'	15	35	45	60
6 x 6 (Wood)	4'	20	50	75	100

*See note 7

No scale

U.S. DEPARTMENT OF TRANSPORTATION
FEDERAL HIGHWAY ADMINISTRATION
EASTERN FEDERAL LANDS HIGHWAY DIVISION

DETAIL

SIGN STRUCTURES

DETAIL APPROVED FOR USE --/----

REVISED: 3/2004 12/2004

DETAIL E633-1

10/23/2006 10:59:49 AM M:\Projects\vlls\st_crolx\nh66(008)proj_dev\Contract 2\details\dl633x01.dgn

REG	STATE	PROJECT	SHEET NO.	TOTAL SHEETS
SE	VI	NH-66(008)	M78	193

STEEL POST FOOTING DATA TABLE					
POST SIZE	NOMINAL SIZE (IN.)	STUB		FOOTING	
		PROJ.	LENGTH	DIA.	MINIMUM DEPTH
a	2 X 2	4"	2'	12"	3'
b	3 X 4	4"	2'	15"	3'
c	4 X 6	4"	2'	15"	3'

STEEL POSTS FOR GROUND MOUNTED SIGNS												
POST SIZE	NOMINAL SIZE (IN.)	BOLT SPECIFICATIONS	BASE CONNECTION DATA TABLE (Inches)									
			A	B	C	D	E	F	t_1	t_2	w	R
a	2 X 2	5/8"Ø X 2 1/2" HS 450 IN.-LBS.	6 1/2	4	5	1 3/4	3/4	1 1/8	5/8	3/16	3/16	11/16
b	3 X 4		8 1/2	4	7	1 3/4	3/4	1 1/8	5/8	3/16	1/4	11/16
c	4 X 6	5/8"Ø X 3" HS 450 IN - LB	10	5	8 1/2	2 1/2	3/4	1 1/4	3/4	1/4	5/16	11/16

FUSE PLATE DATA TABLE (Inches)												
POST SIZE	G	H	J	K	L	M	N	d_1	t_3	c_1	BOLT DIAM.	TORQUE FT.-LBS.
a	4	2 1/4	1 1/8	2	7/8	9/16	5/8	7/16	1/4	1/4	3/8	200
b	4	2 1/4	1 1/8	3	1 1/4	7/8	5/8	9/16	5/16	1/4	1/2	200
c	4 1/2	2 3/8	1 1/4	4	1 3/4	1 1/8	7/8	11/16	3/8	3/8	5/8	200

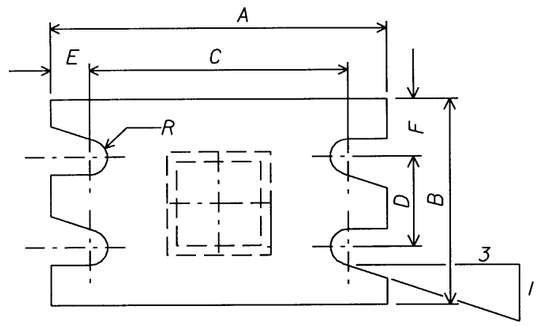

BREAKAWAY PLATE SECTION A-A

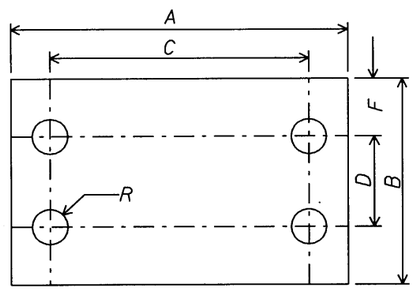

BOND BREAKING PLATE

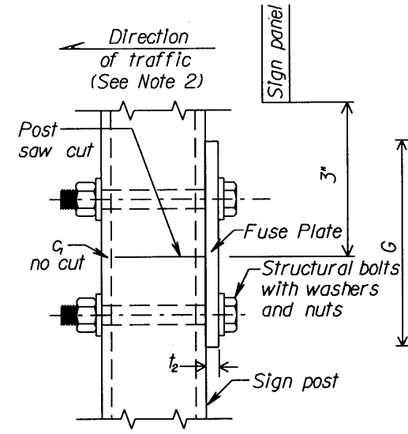

FUSE PLATE SIDE ELEVATION

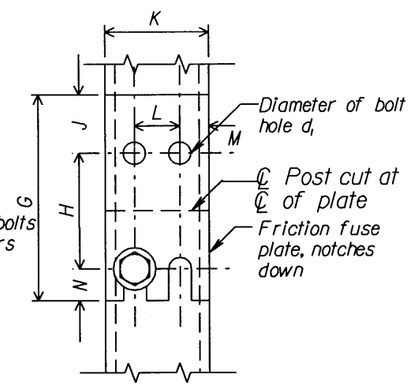

FUSE PLATE FRONT ELEVATION (See Note 4)

NOTES:

1. Breakaway design is not required for signs placed behind protective barriers.
2. Breakaway assembly to be installed in the direction of major traffic.
3. The multiple post breakaway detail to be used on single posts in medians where exposed to opposing lanes of traffic.
4. Fuse plates are to be used on multiple post installations only.
5. The breakaway plates, only are to be painted brown to match the final appearance of the weathering steel posts.

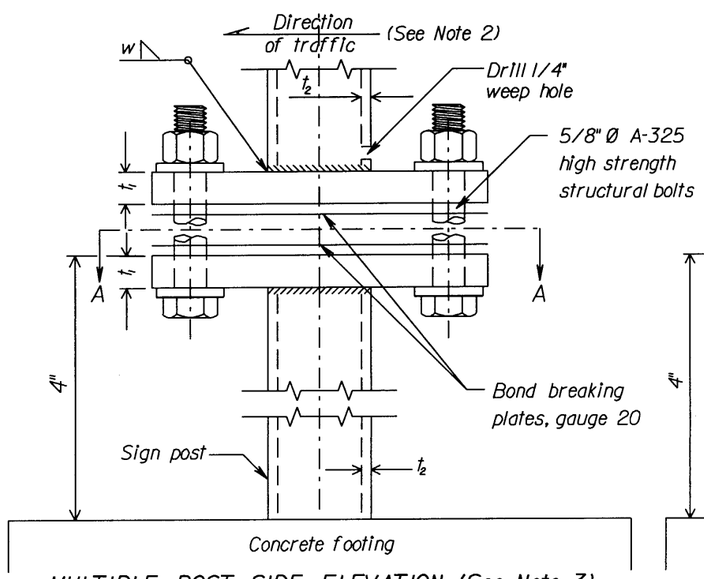

MULTIPLE POST SIDE ELEVATION (See Note 3)

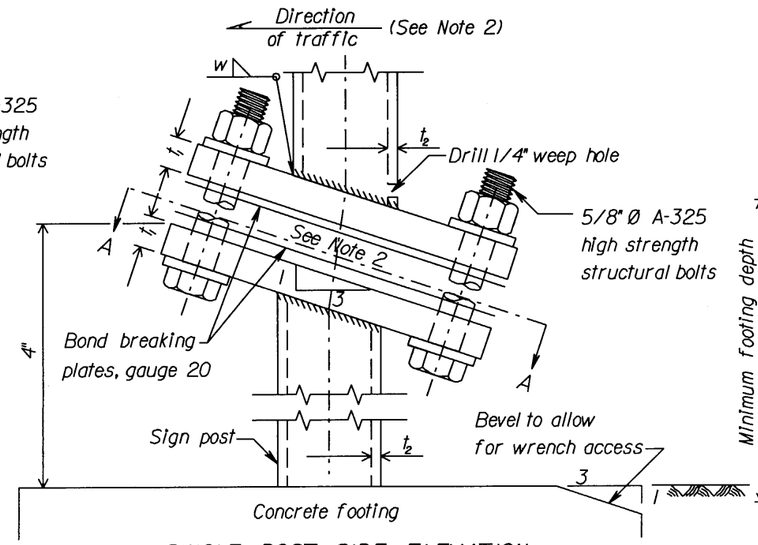

SINGLE POST SIDE ELEVATION

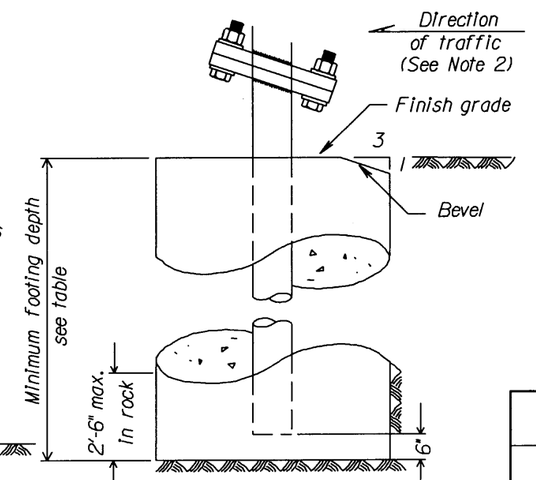

CONCRETE FOOTING DETAILS

U.S. DEPARTMENT OF TRANSPORTATION
FEDERAL HIGHWAY ADMINISTRATION
EASTERN FEDERAL LANDS HIGHWAY DIVISION

DETAIL

BREAKAWAY SIGN SUPPORT, WEATHERING STEEL

DETAIL APPROVED FOR USE --/----

REVISED:

DETAIL E633-2

10/18/2006 5:06:59 PM M:\Projects\vlis\st_crolx\nh66(008)\proj_dev\Contract 2\details\Details\V2.dgn

REG	STATE	PROJECT	SHEET NO.	TOTAL SHEETS
SE	VI	NH-66(008)	M79	193

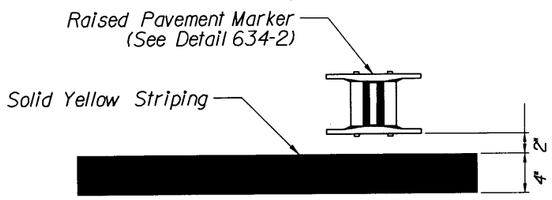

DETAIL A

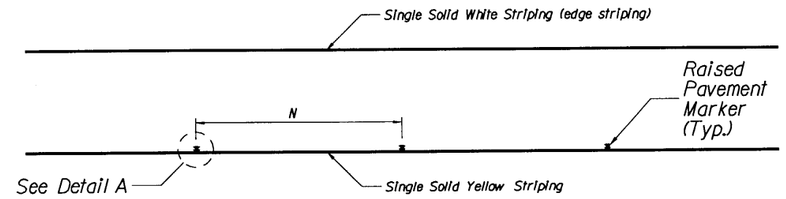

SINGLE SOLID YELLOW STRIPING WITH RAISED PAVEMENT MARKERS

NOTES:

1. All striping shall be in accordance with the Manual on Uniform Traffic Control Devices (MUTCD) latest edition.
2. Space and install Raised Pavement Markers in accordance with the MUTCD and as shown in this detail or as directed by the CO.

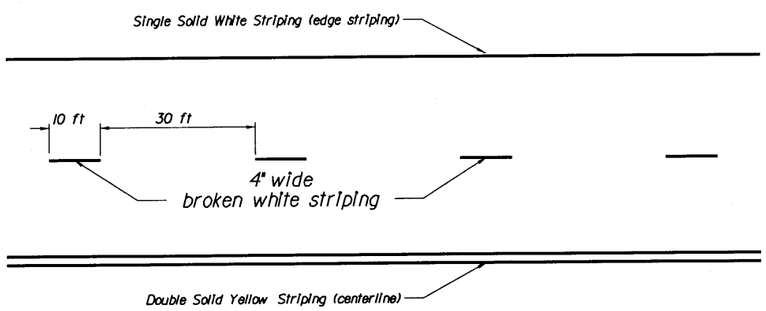

BROKEN SINGLE WHITE AND DOUBLE SOLID YELLOW STRIPING

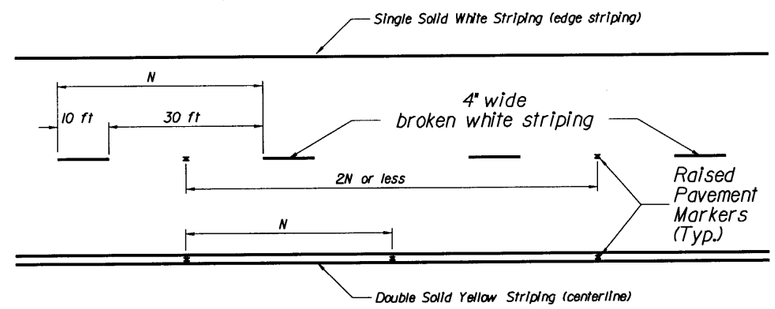

BROKEN SINGLE WHITE AND DOUBLE SOLID YELLOW STRIPING WITH RAISED PAVEMENT MARKERS

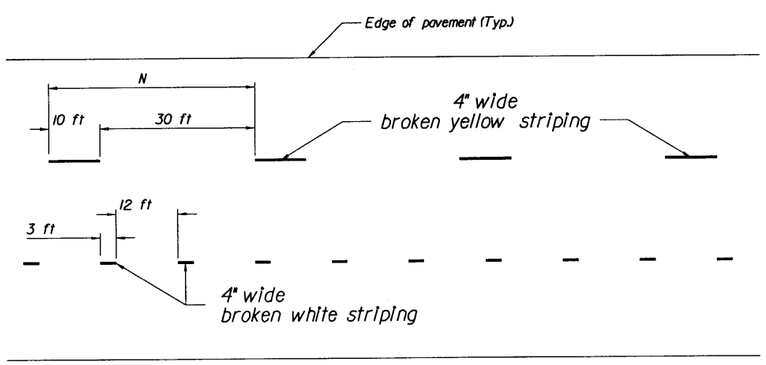

BROKEN SINGLE YELLOW AND DOTTED WHITE STRIPING

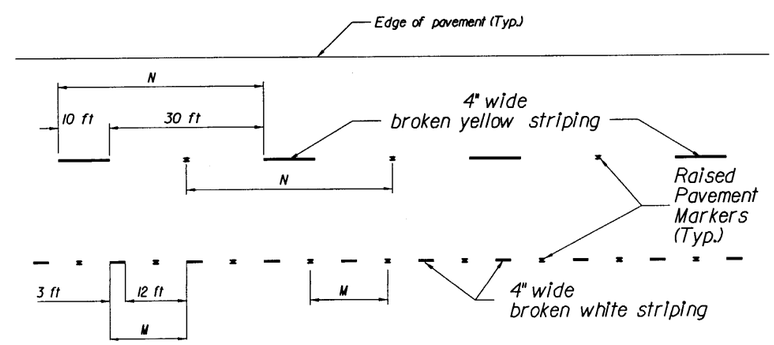

BROKEN SINGLE YELLOW AND DOTTED WHITE STRIPING WITH RAISED PAVEMENT MARKERS

U.S. DEPARTMENT OF TRANSPORTATION
FEDERAL HIGHWAY ADMINISTRATION
EASTERN FEDERAL LANDS HIGHWAY DIVISION

DETAIL
PAVEMENT MARKINGS WITH AND WITHOUT RAISED PAVEMENT MARKERS

DETAIL APPROVED FOR USE XX/XX
REVISED: XX/XX

DETAIL E634-3

10/18/2006 5:09:01 PM M:\Projects\vlis\st_croix\nh66(008)\proj_dev\Contract 2\details\DetailsV2.dgn

REG	STATE	PROJECT	SHEET NO.	TOTAL SHEETS
SE	VI	NH-66(008)	M80	193

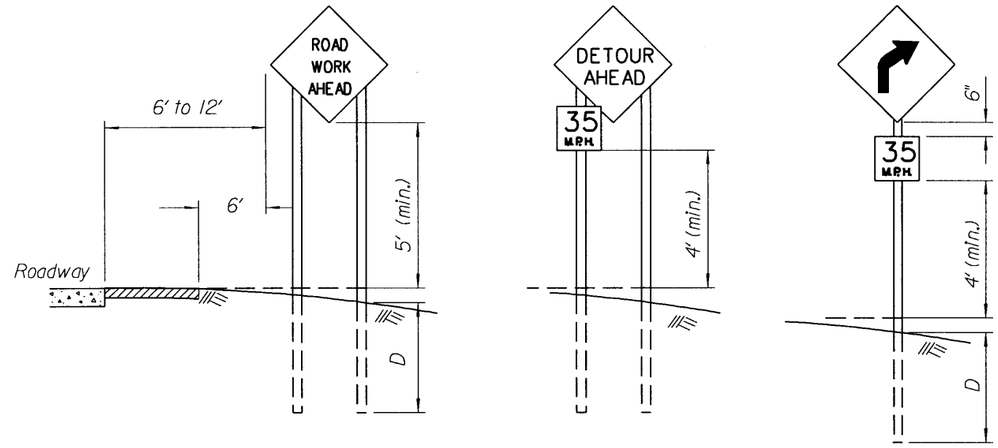

RURAL AREA

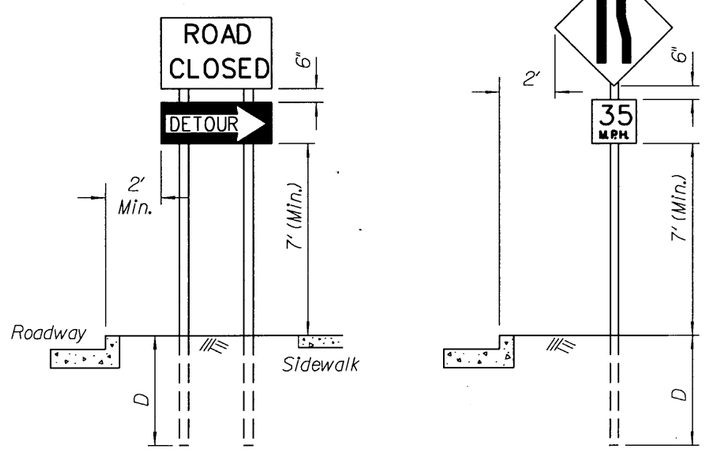

URBAN AREA

FIXED ROADWAY SIGNS

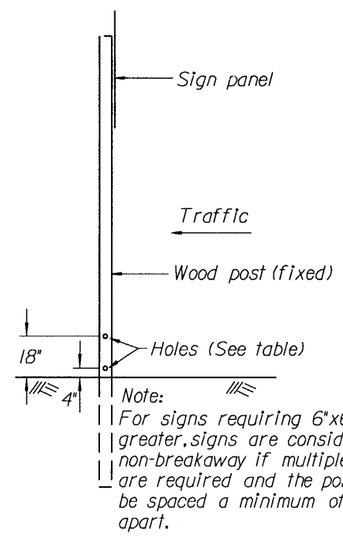

Note:
For signs requiring 6"x6" posts and greater, signs are considered to be non-breakaway if multiple posts are required and the posts cannot be spaced a minimum of 7 feet apart.

BREAKAWAY SUPPORT DETAIL
(FIXED SIGNS - 4" x 6" AND GREATER POSTS)

Post size	D	Hole Dia.	Maximum Sign Area - Sq.ft.			
			1 Post	2 Posts	3 Posts	4 Posts
4" x 4"	4'	None Req'd	10	20	X	X
4" x 6"	4'	1.5"	X	35	50	70
6" x 6"	5'	2"	X	50	75	100
6" x 8"	5'	3"	X	85	125	165

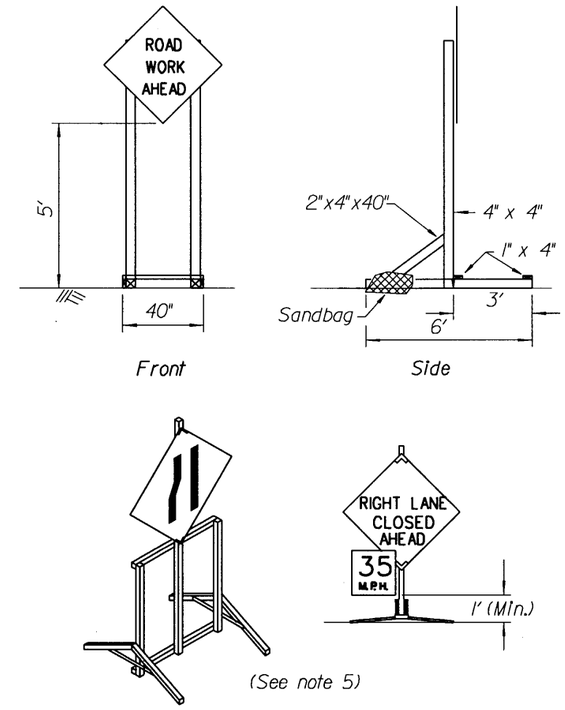

PORTABLE SIGNS

Notes:

1. Wood posts are 4"x 4" unless otherwise indicated.
2. Mount signs that are wider than 3-feet or larger than 10 square feet on double posts.
3. All lumber dimensions are nominal.
4. The Contractor may submit alternate details for portable signs, however, sign mounts hold the sign face in a vertical plane. Portable signs may be mounted lower than fixed signs when approved by the CO.
5. When parking is permitted within 200 feet of the sign, mount the sign a minimum of 7 feet above the pavement surface.
6. When approved by the CO and the Utility Company, utility poles may be used for sign mounting.
7. For posts greater than 4" x 4" see the Breakaway Support Detail. If breakaway design cannot be used, due to post spacing, the sign should be placed outside the clearzone or be shielded by barrier. Do not place holes in posts of non-breakaway signs

U.S. DEPARTMENT OF TRANSPORTATION
FEDERAL HIGHWAY ADMINISTRATION
EASTERN FEDERAL LANDS HIGHWAY DIVISION

DETAIL

CONSTRUCTION TRAFFIC CONTROL SIGN MOUNTING

DETAIL APPROVED FOR USE --/----
REVISED: 08/00

DETAIL
E635-1

10/18/2006 5:10:10 PM M:\Projects\vlts\st_crolx\nh66(008)proj_dev\Contract 2\details\Details\2.dgn

REG	STATE	PROJECT	SHEET NO.	TOTAL SHEETS
SE	VI	NH-66(008)	MB1	193

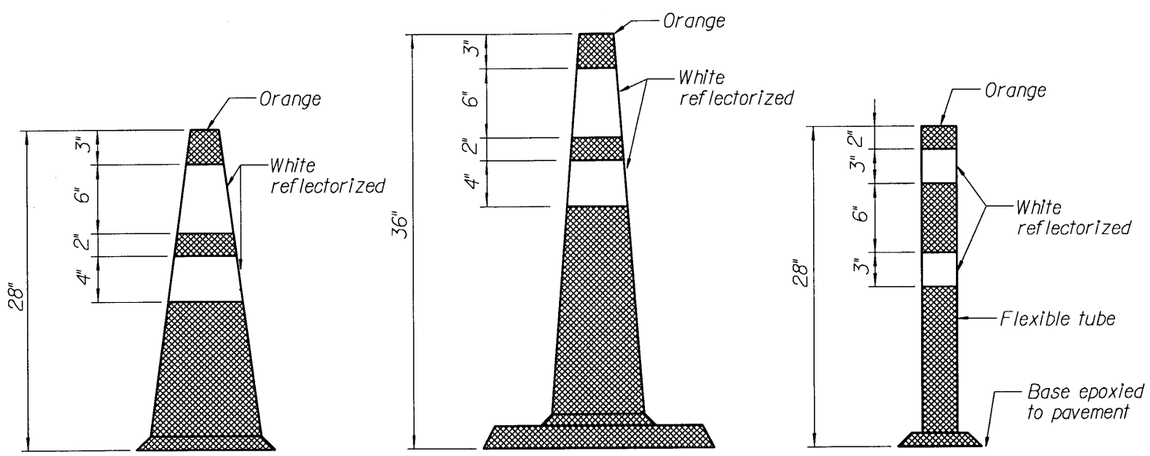

(Standard Cone)
TYPE A

(High Ballasted Cone)
TYPE B

(Flexible Cone)
TYPE C

CONES

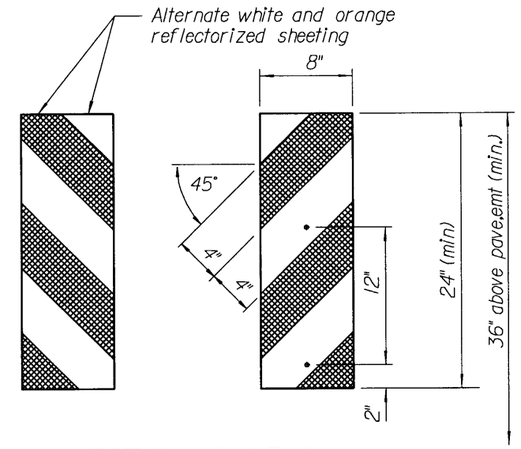

VERTICAL PANELS (ORANGE AND WHITE)

Notes:

1. Reflectorize vertical panels with alternate orange and white stripes as shown.
2. Mount delineators 4 feet above the pavement surface.
3. Drums may be weighted with 20 pounds (maximum of sand, and contain no moisture.
4. Temporary raised pavement marker's color to match corresponding pavement striping, clear for white and amber for yellow.
5. Cones, type A may be ballasted with weighted rings.

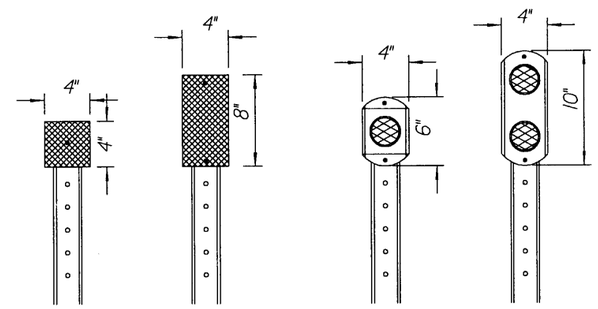

Type III
Reflective Sheeting

3" Diameter
Reflector

DELINEATORS

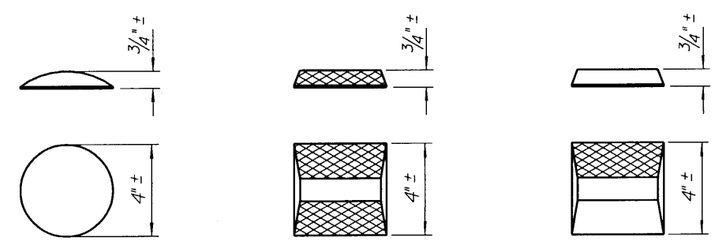

TYPE A

TYPE B

TYPE C

TEMPORARY RAISED PAVEMENT MARKERS

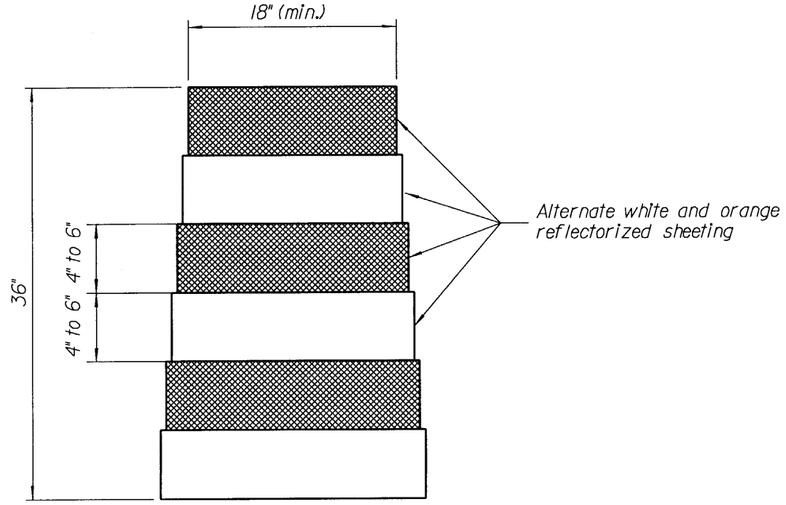

(Non-metal Drum)
TYPE B

DRUM

U.S. DEPARTMENT OF TRANSPORTATION
FEDERAL HIGHWAY ADMINISTRATION
EASTERN FEDERAL LANDS HIGHWAY DIVISION

DETAIL

CONSTRUCTION TRAFFIC CONTROL
CHANNELIZING DEVICES

DETAIL APPROVED FOR USE XX/XX	DETAIL
REVISED: XX/XX	E635-3

10/18/2006 4:51:14 PM M:\Projects\VI\st_croix\nh66(008)\proj_dev\Contract 2\details\Details\2.dgn

REG	STATE	PROJECT	SHEET NO.	TOTAL SHEETS
SE	VI	NH-66(008)	M82	193

TYPICAL APPLICATION: TWO WAY, TWO LANE ROADWAY, CLOSING ONE LANE USING FLAGGERS

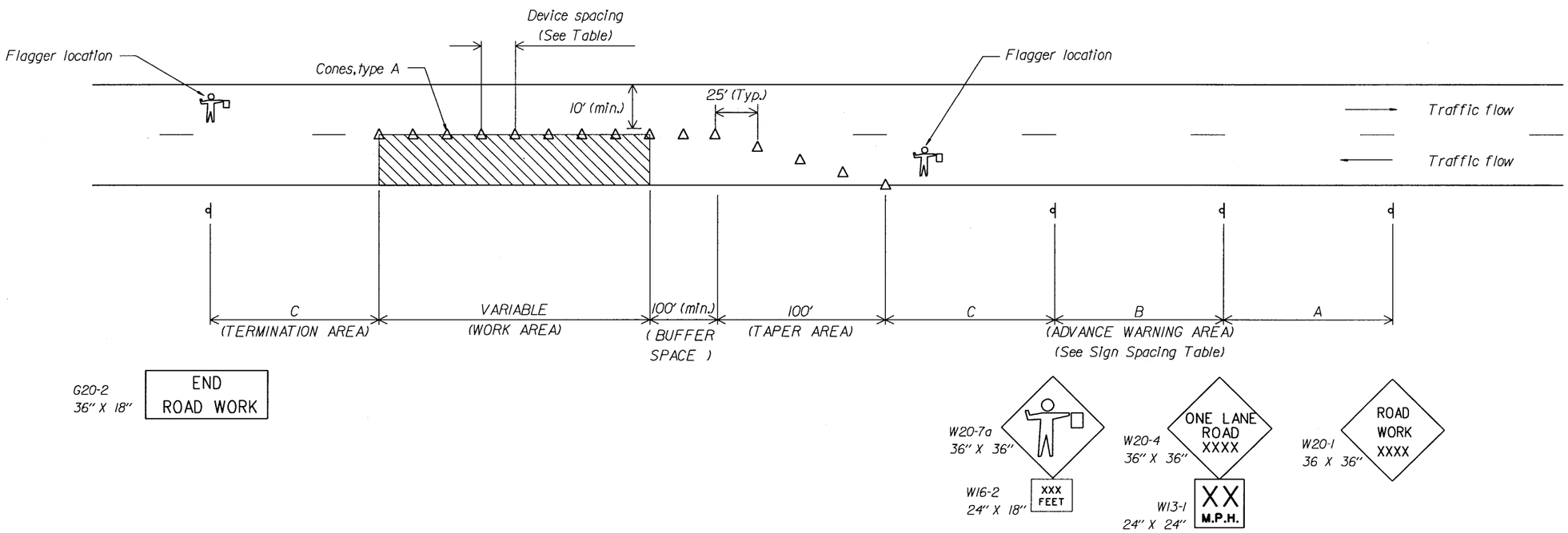

APPROACH SPEED (MPH)	CHANNELIZING DEVICE SPACING (FT) WORK AREA
25	50
30	60
35	70
40	80
45	90
50	100
55	100

Road Type	Distance Between Signs		
	A	B	C
Urban (30 MPH and less)	200	200	200
Urban (35 MPH and greater)	350	350	350
Rural	500	500	500

NOTES:

1. Final location and spacing of signs and devices may be changed to fit field conditions as approved by the CO.
2. Signs shown are for one direction only. Repeat the signing for the opposite direction.

U.S. DEPARTMENT OF TRANSPORTATION
FEDERAL HIGHWAY ADMINISTRATION
EASTERN FEDERAL LANDS HIGHWAY DIVISION

DETAIL

CONSTRUCTION TRAFFIC CONTROL
SINGLE LANE CLOSURE LAYOUT
(WITH FLAGGERS)

DETAIL APPROVED FOR USE --/----

REVISED: 10/01

DETAIL
VI635-A

10/18/2006 4:52:37 PM M:\Projects\vlis\st_crat\nh66(008)pro_dev\Contract 2\details\Details\2.dgn

REG	STATE	PROJECT	SHEET NO.	TOTAL SHEETS
SE	VI	NH-66(008)	M83	193

TYPICAL APPLICATION: ONE WAY OR TWO WAY, TWO LANE ROADWAY, CLOSING SHOULDER

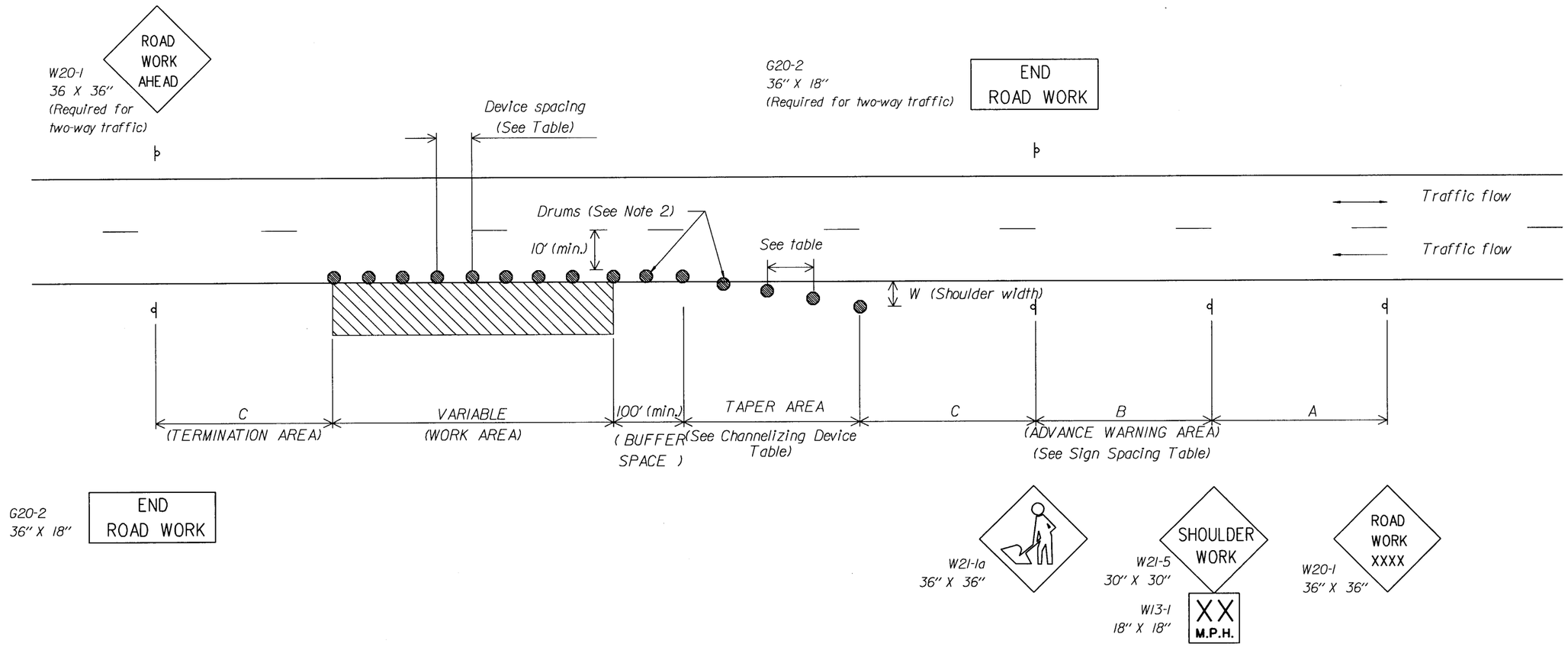

NOTES:

1. Final location and spacing of signs and devices may be changed to fit field conditions as approved by the CO.
2. For operations that require a shoulder closure for a day or less, drums may be substituted with cones, type A in the Work Area.

CHANNELIZING DEVICE TABLE			
APPROACH SPEED (MPH)	MINIMUM TAPER LENGTH (FT)	CHANNELIZING DEVICE SPACING (FT)	
		TAPER AREA	WORK AREA
25	Taper formula:	25	50
30	$L = \frac{W \times S}{3}$ for speeds of 45 or greater	30	60
35	$L = \frac{WS^2}{180}$ for speeds of 40 or less	35	70
40	Where:	40	80
45	L = Minimum length of taper	45	90
50	S = Numerical value of posted speed limit prior to work area or 85 percentile speed	50	100
55	W = Width of offset	55	100

SIGN SPACING TABLE			
Road Type	Distance Between Signs		
	A	B	C
Urban (30 MPH and less)	200	200	200
Urban (35 MPH and greater)	350	350	350
Rural	500	500	500
Expressway/Urban Parkway	2600	1600	1000

U.S. DEPARTMENT OF TRANSPORTATION
FEDERAL HIGHWAY ADMINISTRATION
EASTERN FEDERAL LANDS HIGHWAY DIVISION

DETAIL

CONSTRUCTION TRAFFIC CONTROL
SHOULDER CLOSURE LAYOUT

DETAIL APPROVED FOR USE --/----

REVISED:

DETAIL
VI635-B

10/18/2006 4:57:41 PM M:\Projects\vlis\st_crolx\nh66(008)proj_dev\Contract 2\details\Details\V2.dgn

U.S. DEPARTMENT OF TRANSPORTATION
FEDERAL HIGHWAY ADMINISTRATION
EASTERN FEDERAL LANDS HIGHWAY DIVISION
STERLING, VIRGINIA

CHRISTIANSTED BY-PASS DESIGN CROSS SECTION

REG	STATE	PROJECT	SHEET NO.	TOTAL SHEETS
SE	VI	NH-66(008)	N1	193

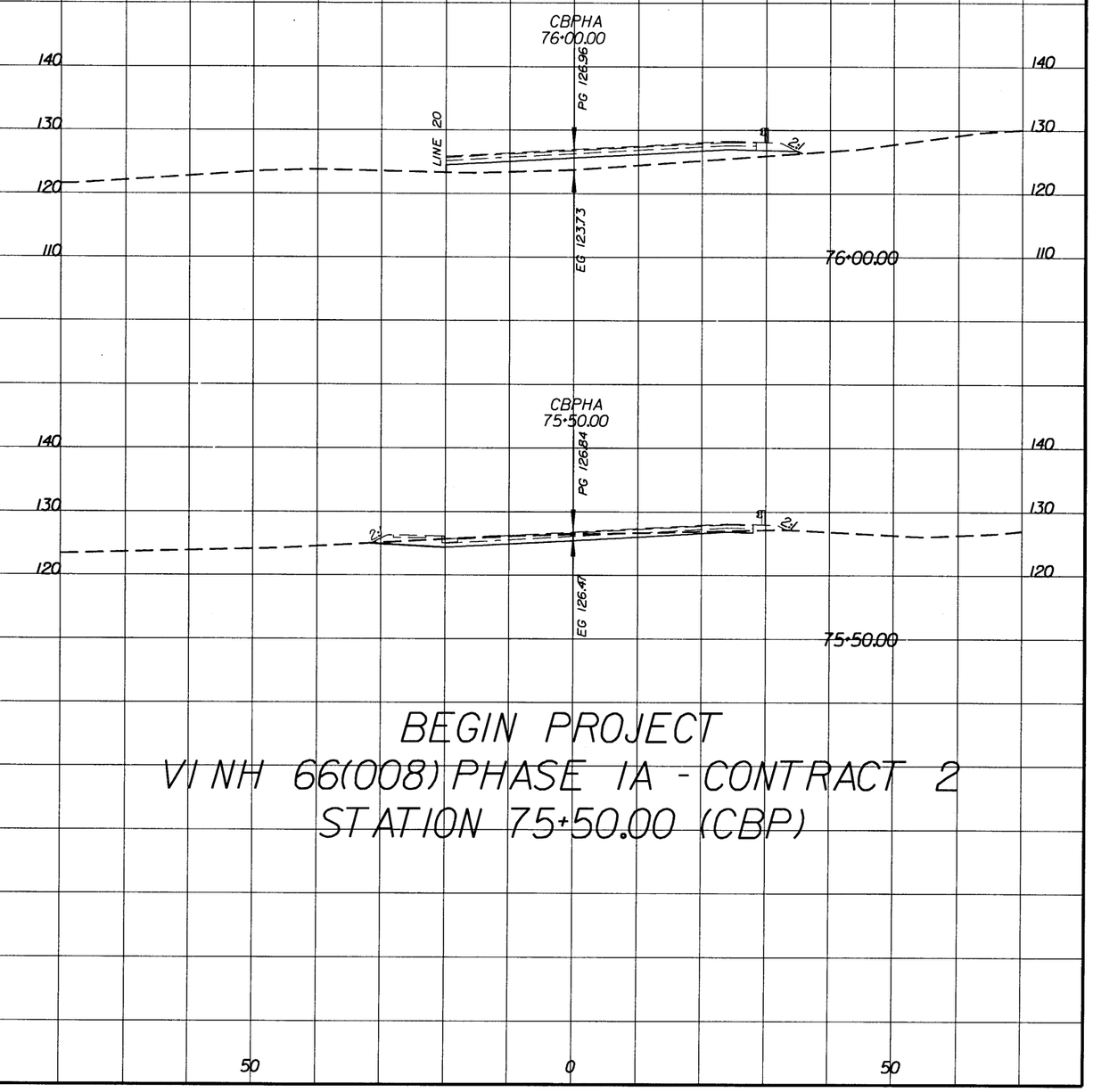

BEGIN PROJECT
VI NH 66(008) PHASE IA - CONTRACT 2
STATION 75+50.00 (CBP)

U.S. DEPARTMENT OF TRANSPORTATION
FEDERAL HIGHWAY ADMINISTRATION
EASTERN FEDERAL LANDS HIGHWAY DIVISION
STERLING, VIRGINIA

CHRISTIANSTED BY-PASS DESIGN CROSS SECTION

REG	STATE	PROJECT	SHEET NO.	TOTAL SHEETS
SE	VI	NH-66(008)	N2	193

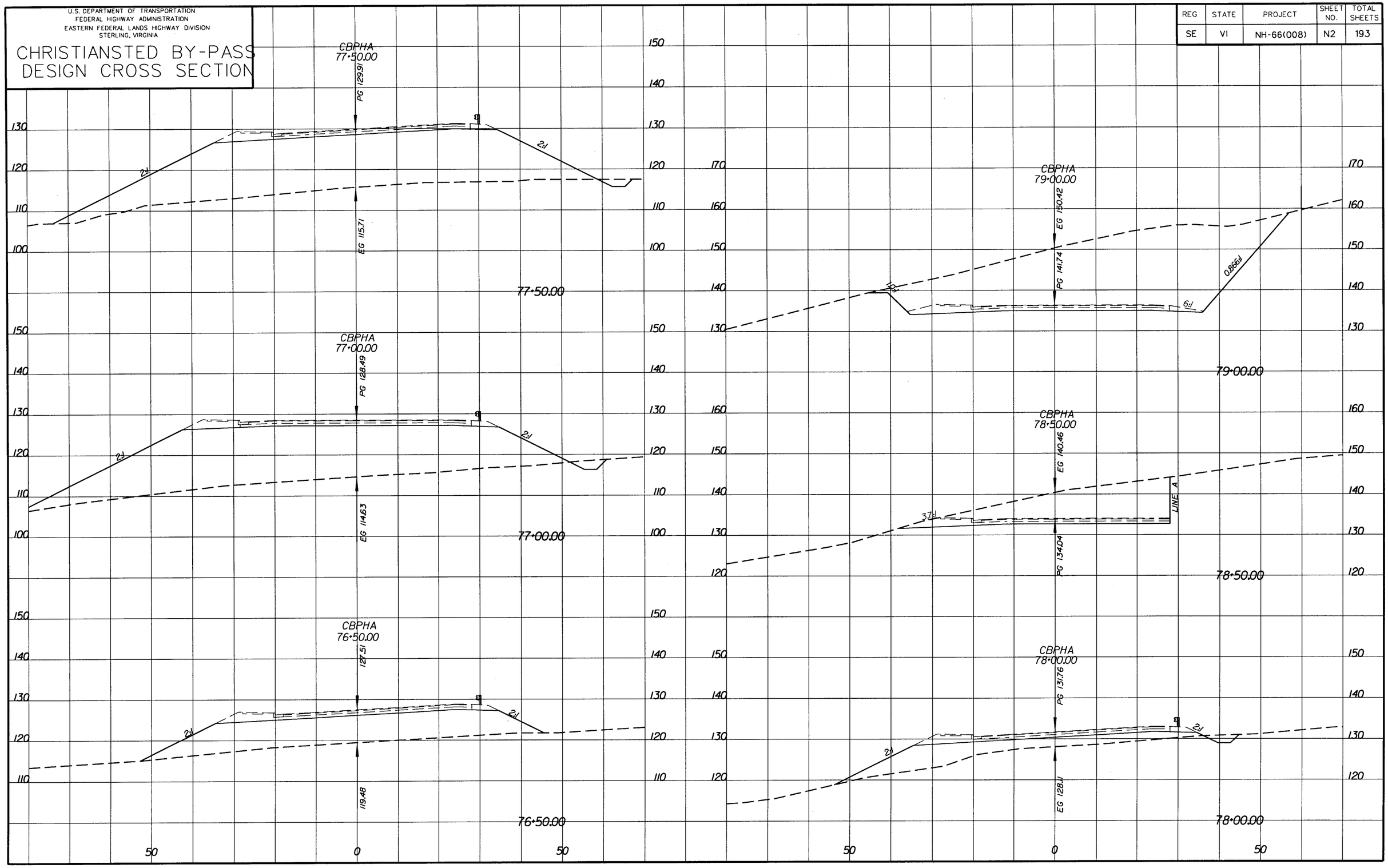

U.S. DEPARTMENT OF TRANSPORTATION
FEDERAL HIGHWAY ADMINISTRATION
EASTERN FEDERAL LANDS HIGHWAY DIVISION
STERLING, VIRGINIA

CHRISTIANSTED BY-PASS DESIGN CROSS SECTION

REG	STATE	PROJECT	SHEET NO.	TOTAL SHEETS
SE	VI	NH-66(008)	N3	193

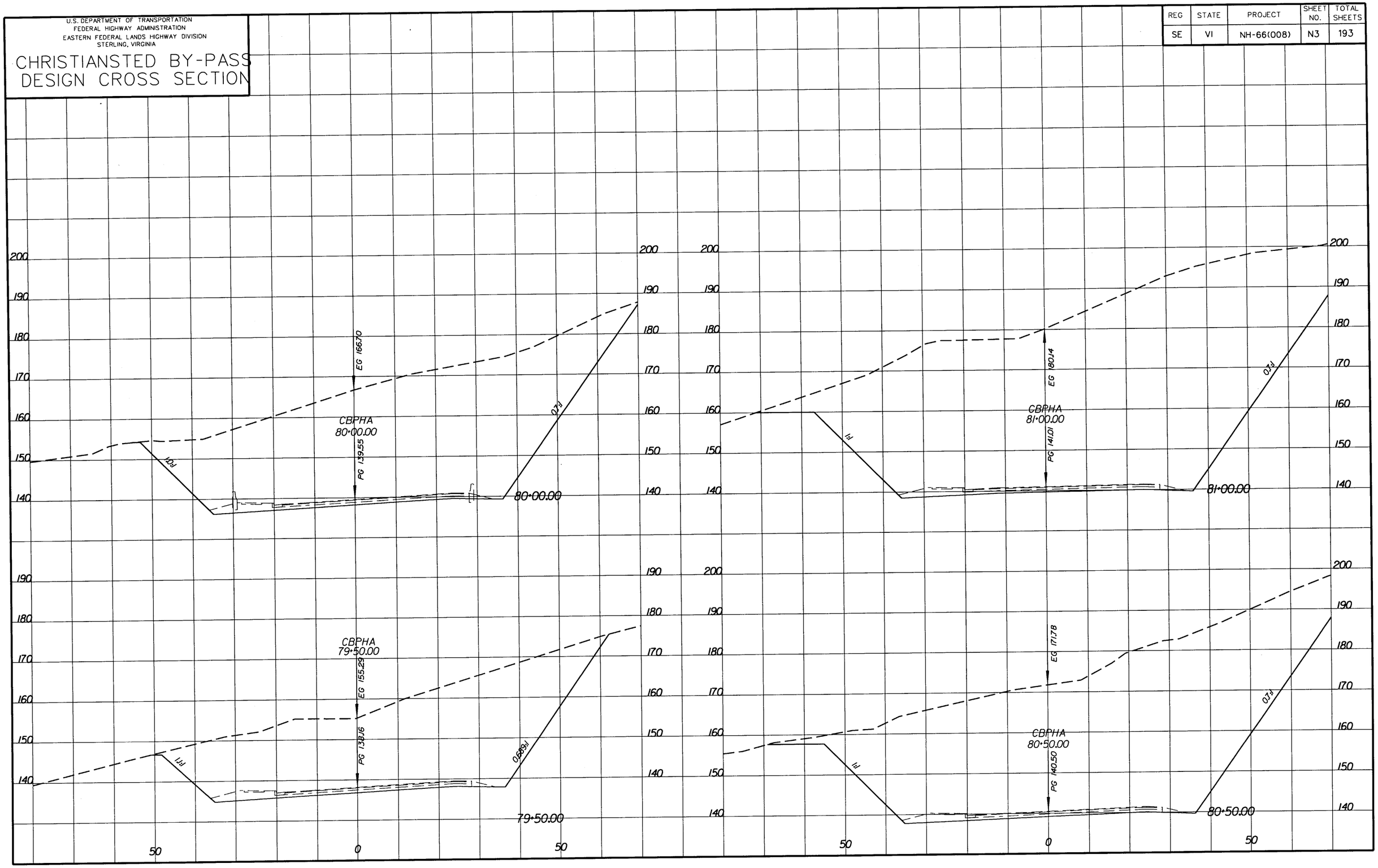

U.S. DEPARTMENT OF TRANSPORTATION
FEDERAL HIGHWAY ADMINISTRATION
EASTERN FEDERAL LANDS HIGHWAY DIVISION
STERLING, VIRGINIA

CHRISTIANSTED BY-PASS DESIGN CROSS SECTION

REG	STATE	PROJECT	SHEET NO.	TOTAL SHEETS
SE	VI	NH-66(008)	N4	193

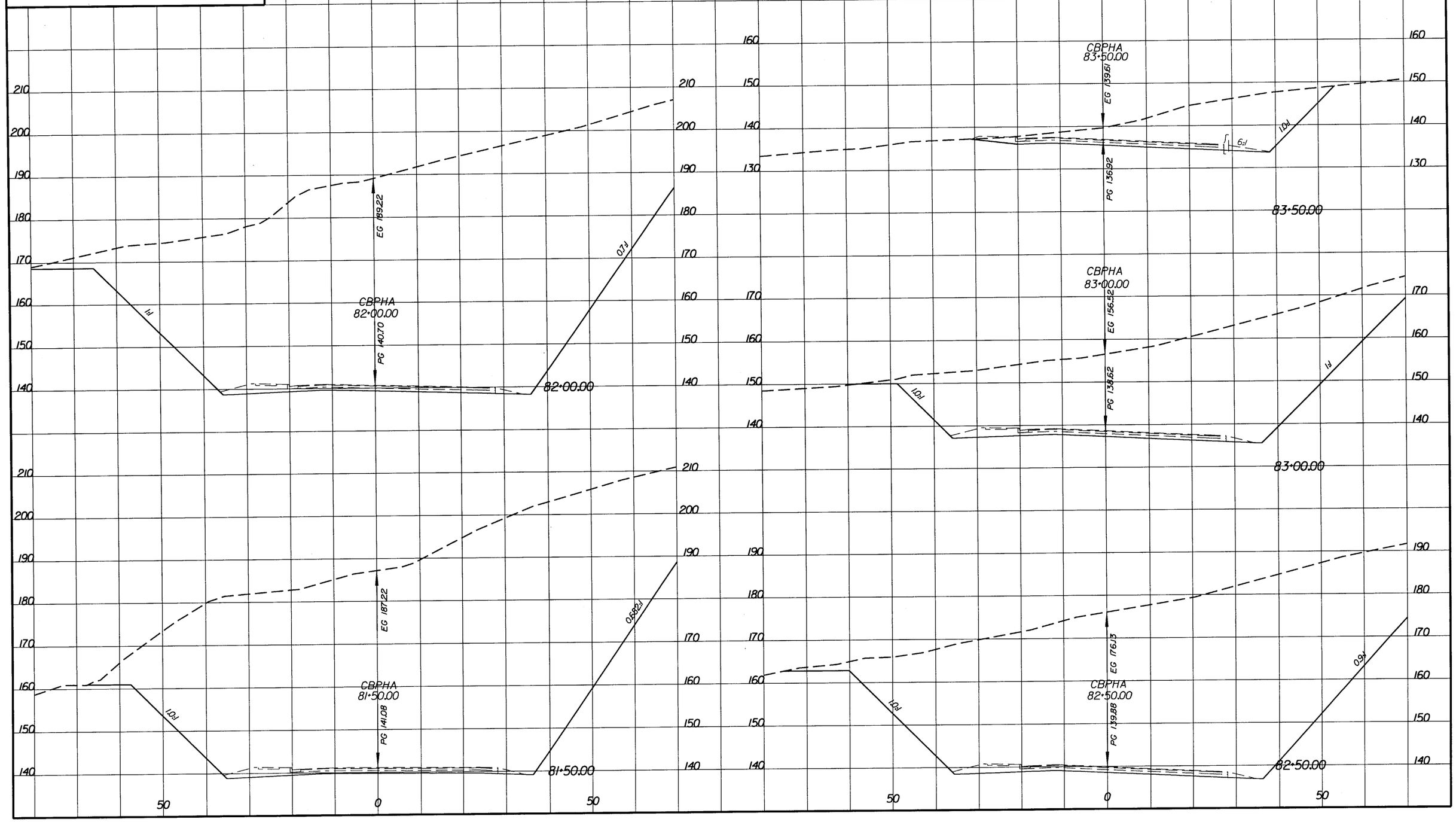

U.S. DEPARTMENT OF TRANSPORTATION
FEDERAL HIGHWAY ADMINISTRATION
EASTERN FEDERAL LANDS HIGHWAY DIVISION
STERLING, VIRGINIA

CHRISTIANSTED BY-PASS DESIGN CROSS SECTION

REG	STATE	PROJECT	SHEET NO.	TOTAL SHEETS
SE	VI	NH-66(008)	N5	193

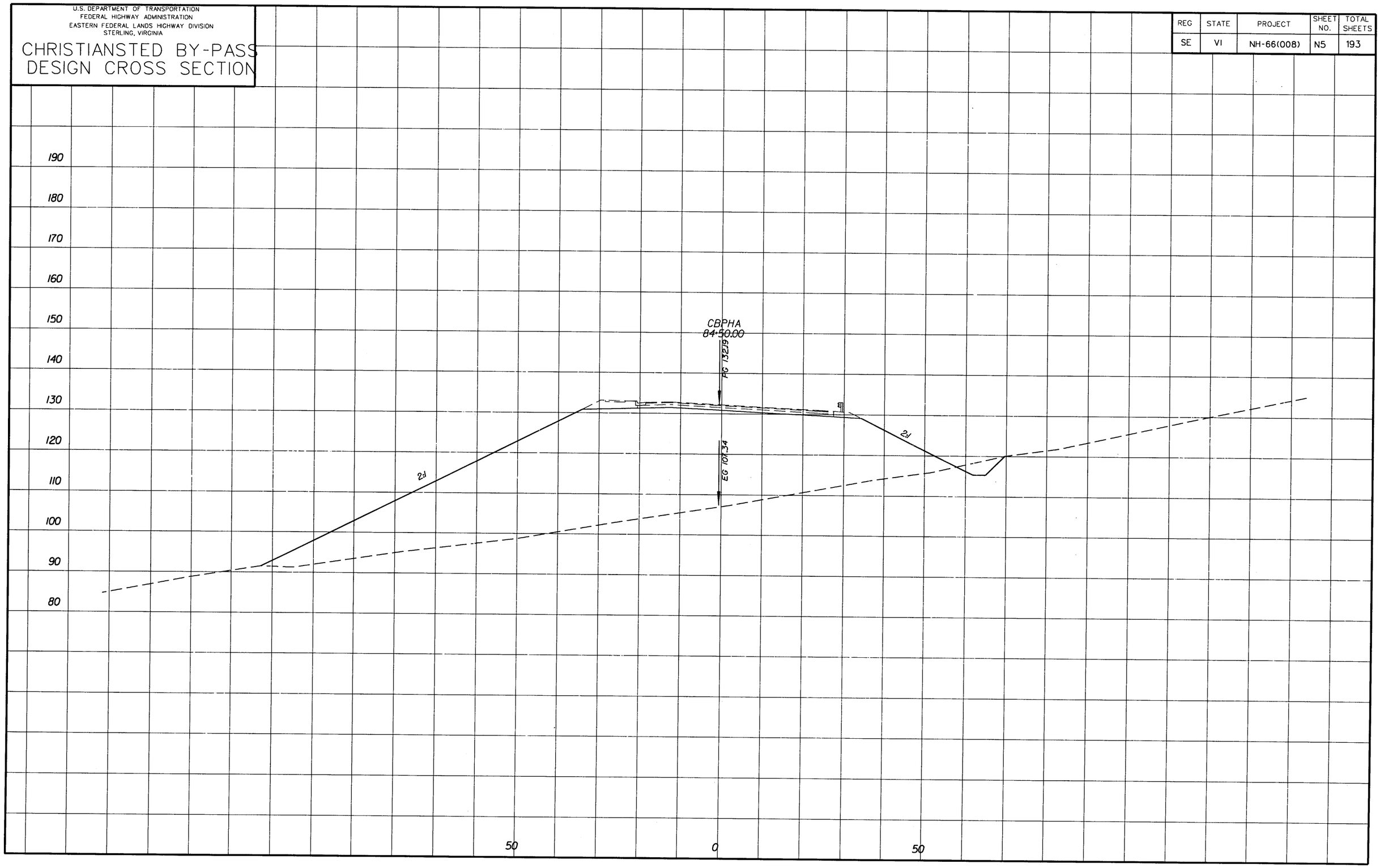

U.S. DEPARTMENT OF TRANSPORTATION
FEDERAL HIGHWAY ADMINISTRATION
EASTERN FEDERAL LANDS HIGHWAY DIVISION
STERLING, VIRGINIA

CHRISTIANSTED BY-PASS DESIGN CROSS SECTION

REG	STATE	PROJECT	SHEET NO.	TOTAL SHEETS
SE	VI	NH-66(008)	N6	193

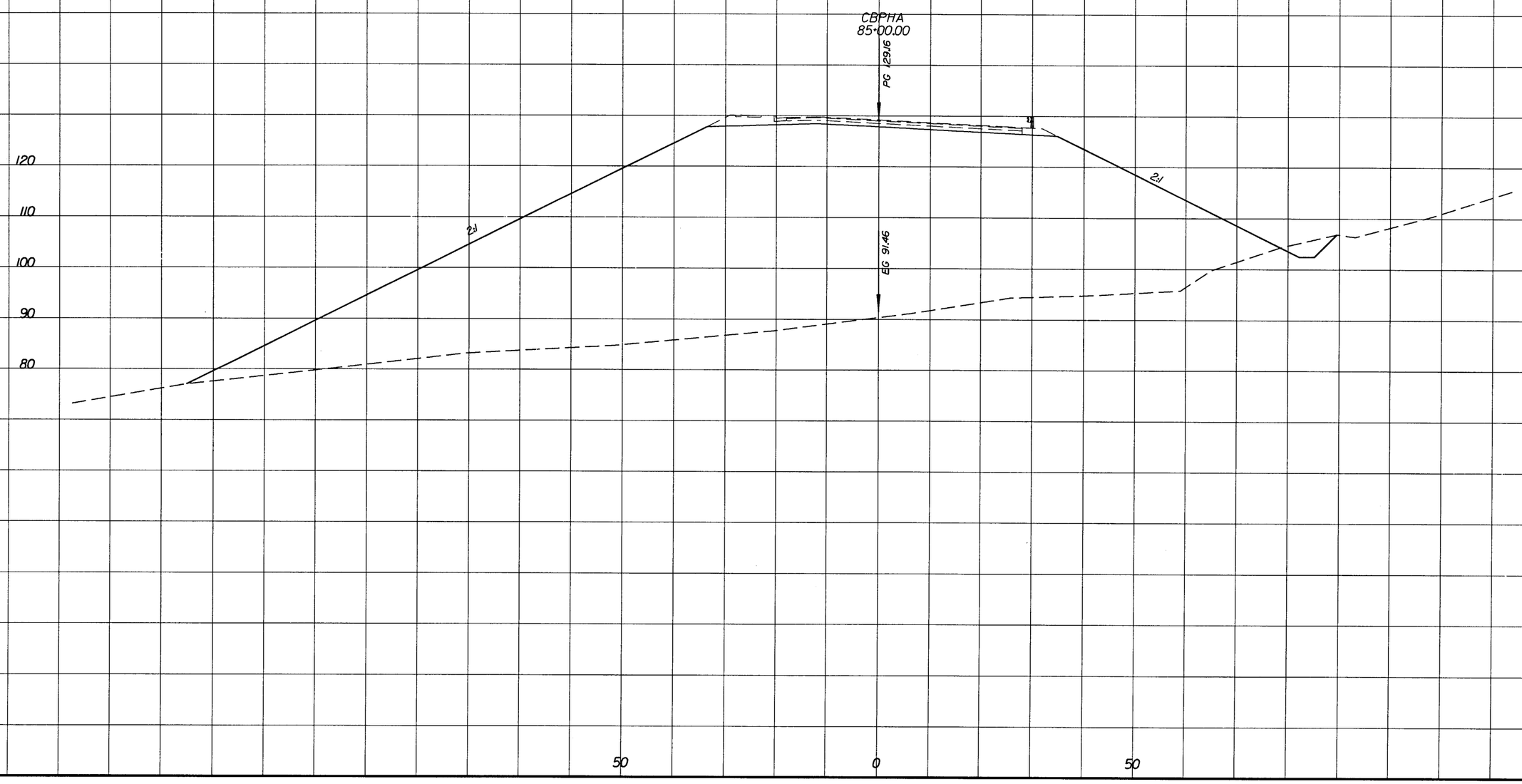

U.S. DEPARTMENT OF TRANSPORTATION
FEDERAL HIGHWAY ADMINISTRATION
EASTERN FEDERAL LANDS HIGHWAY DIVISION
STERLING, VIRGINIA

CHRISTIANSTED BY-PASS DESIGN CROSS SECTION

REG	STATE	PROJECT	SHEET NO.	TOTAL SHEETS
SE	VI	NH-66(008)	N7	193

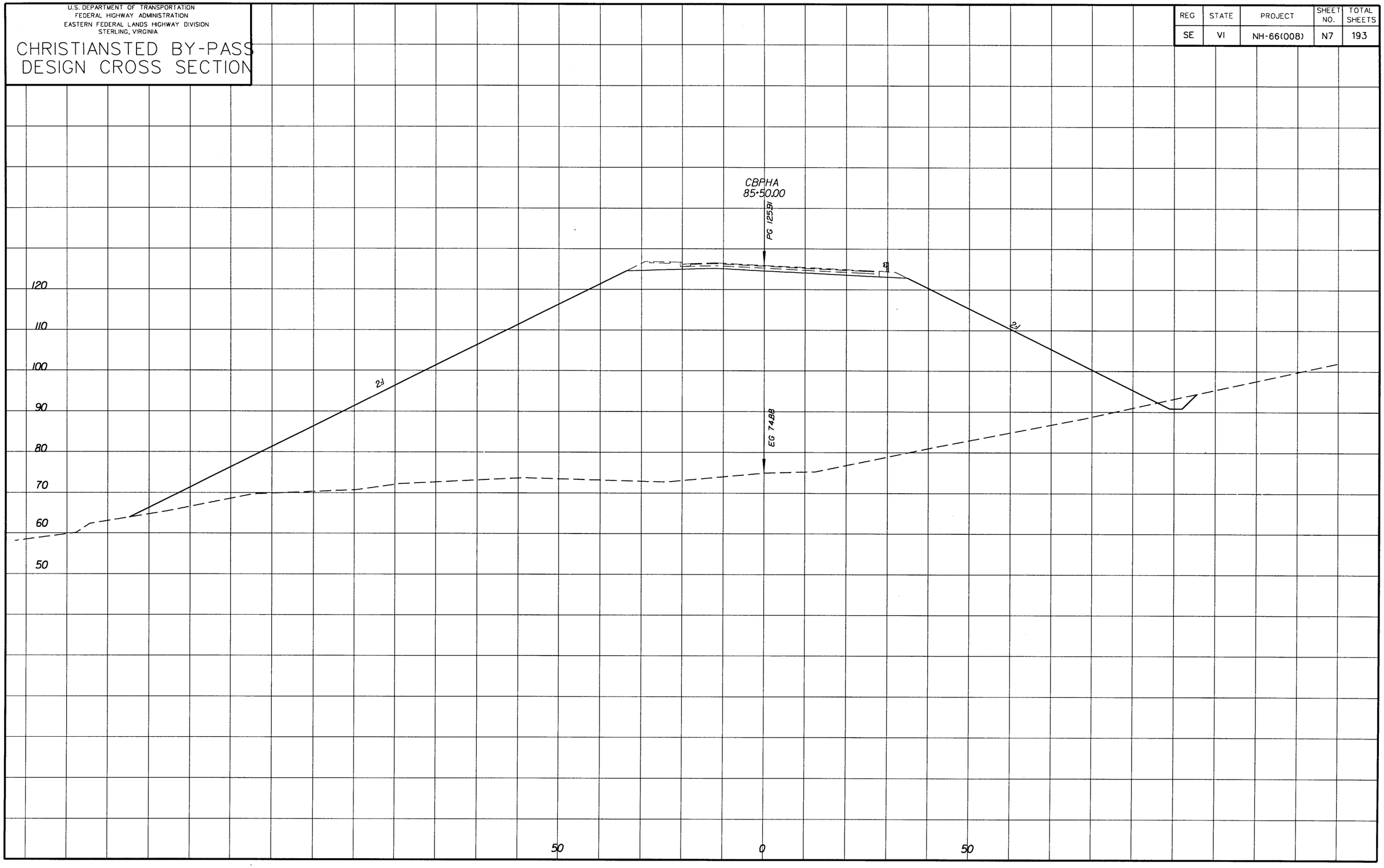

U.S. DEPARTMENT OF TRANSPORTATION
FEDERAL HIGHWAY ADMINISTRATION
EASTERN FEDERAL LANDS HIGHWAY DIVISION
STERLING, VIRGINIA

CHRISTIANSTED BY-PASS DESIGN CROSS SECTION

REG	STATE	PROJECT	SHEET NO.	TOTAL SHEETS
SE	VI	NH-66(008)	N8	193

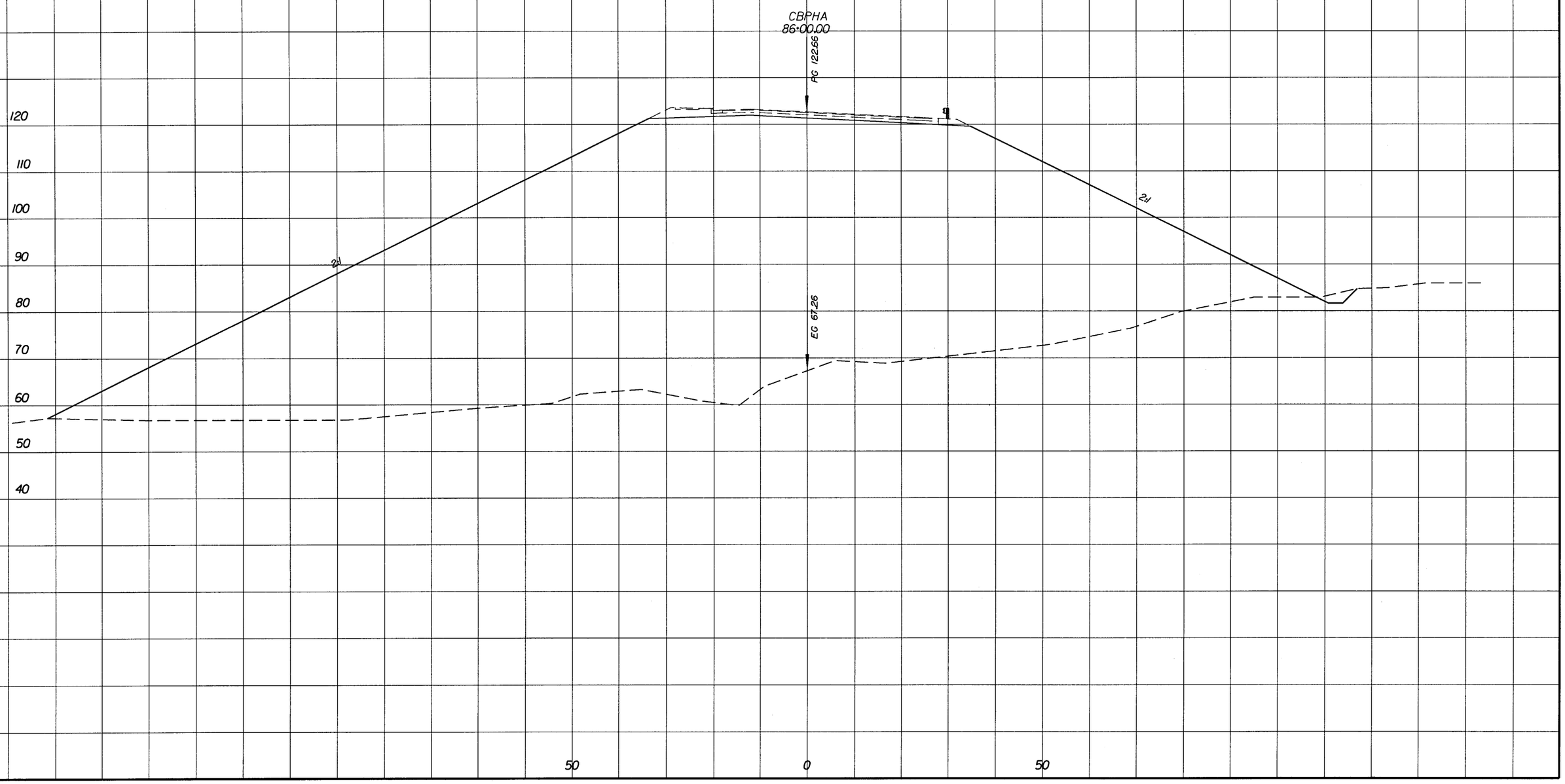

U.S. DEPARTMENT OF TRANSPORTATION
FEDERAL HIGHWAY ADMINISTRATION
EASTERN FEDERAL LANDS HIGHWAY DIVISION
STERLING, VIRGINIA

CHRISTIANSTED BY-PASS DESIGN CROSS SECTION

REG	STATE	PROJECT	SHEET NO.	TOTAL SHEETS
SE	VI	NH-66(008)	N9	193

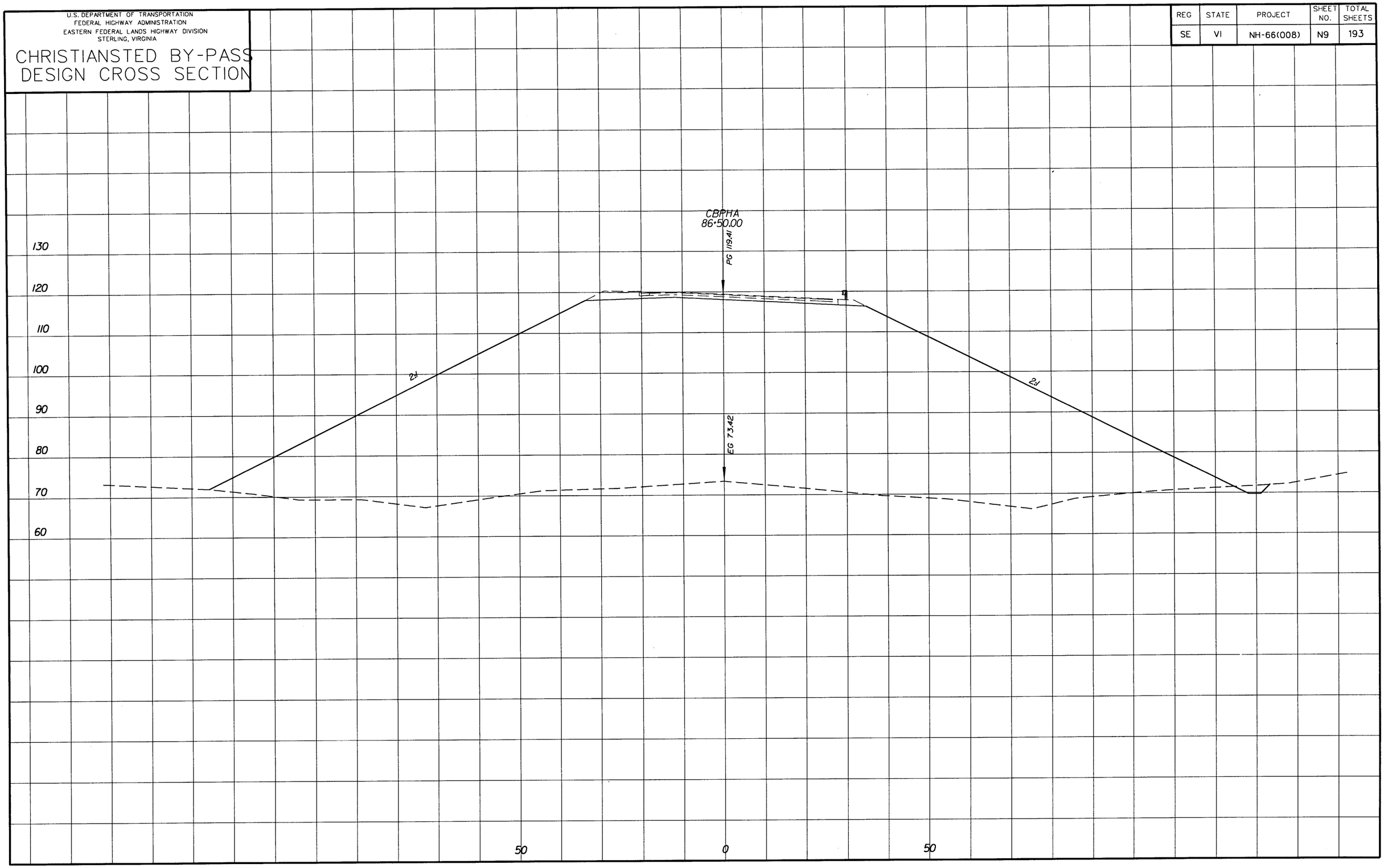

U.S. DEPARTMENT OF TRANSPORTATION
FEDERAL HIGHWAY ADMINISTRATION
EASTERN FEDERAL LANDS HIGHWAY DIVISION
STERLING, VIRGINIA

CHRISTIANSTED BY-PASS DESIGN CROSS SECTION

REG	STATE	PROJECT	SHEET NO.	TOTAL SHEETS
SE	VI	NH-66(008)	N10	193

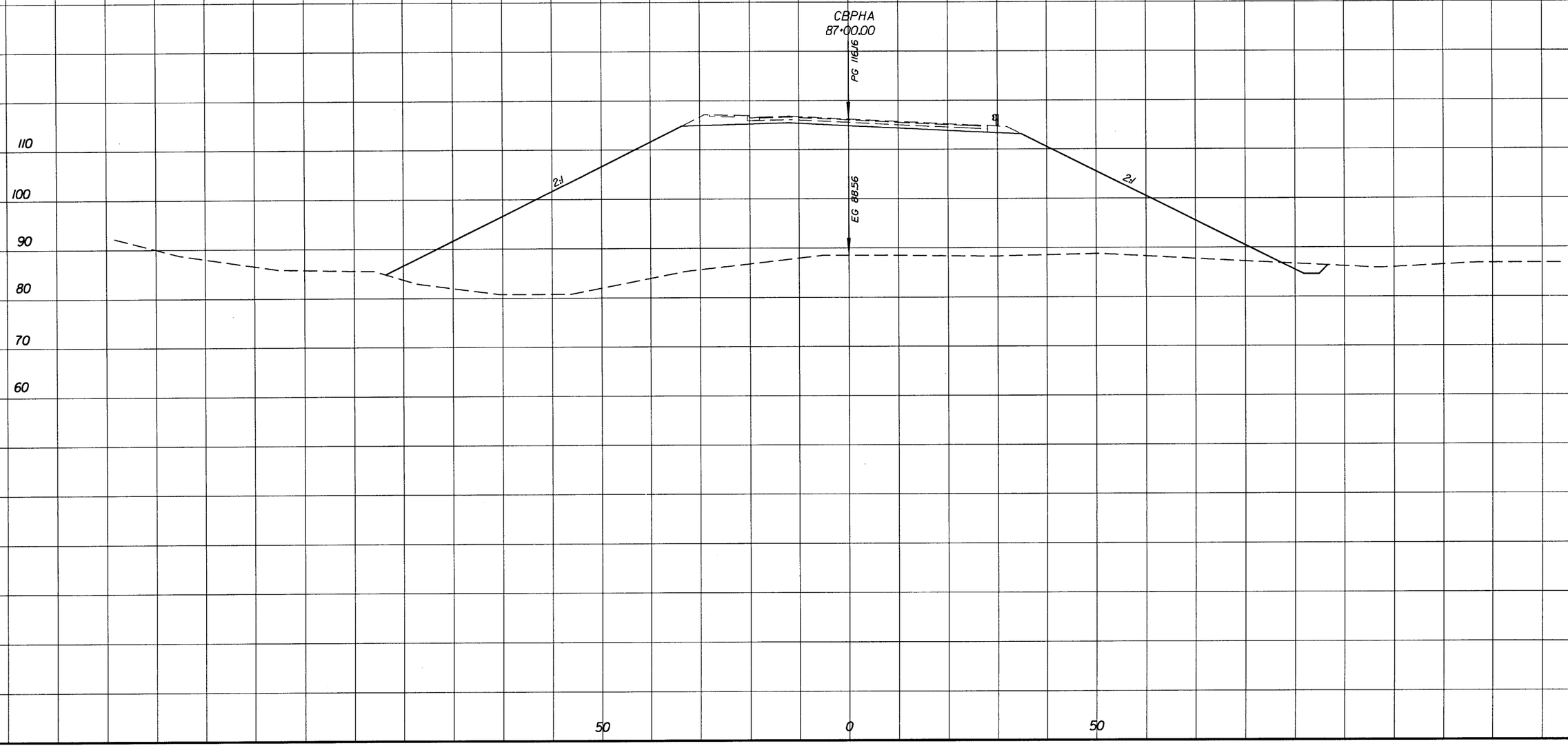

U.S. DEPARTMENT OF TRANSPORTATION
FEDERAL HIGHWAY ADMINISTRATION
EASTERN FEDERAL LANDS HIGHWAY DIVISION
STERLING, VIRGINIA

CHRISTIANSTED BY-PASS DESIGN CROSS SECTION

REG	STATE	PROJECT	SHEET NO.	TOTAL SHEETS
SE	VI	NH-66(008)	N11	193

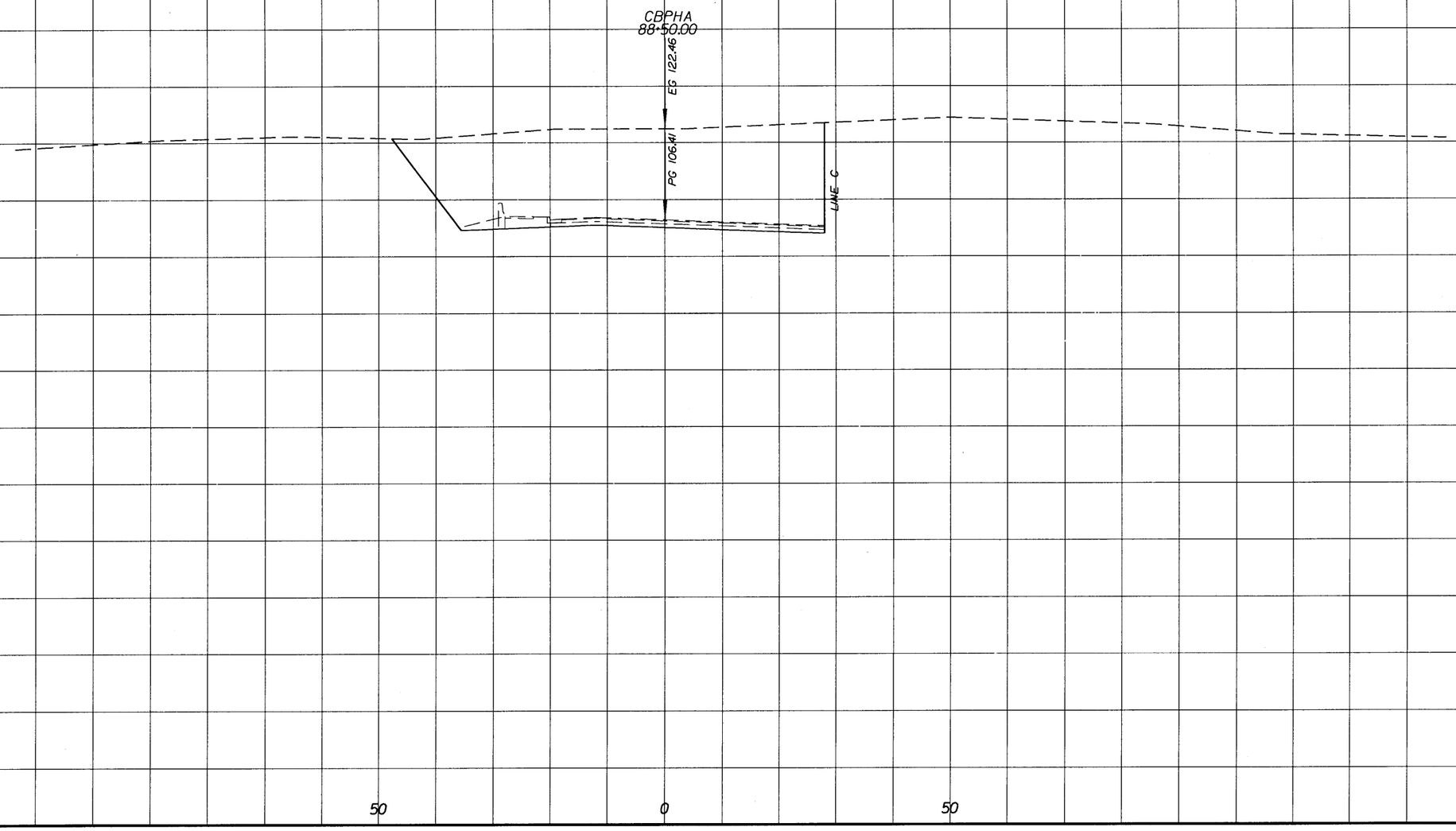

U.S. DEPARTMENT OF TRANSPORTATION
FEDERAL HIGHWAY ADMINISTRATION
EASTERN FEDERAL LANDS HIGHWAY DIVISION
STERLING, VIRGINIA

CHRISTIANSTED BY-PASS DESIGN CROSS SECTION

REG	STATE	PROJECT	SHEET NO.	TOTAL SHEETS
SE	VI	NH-66(008)	N12	193

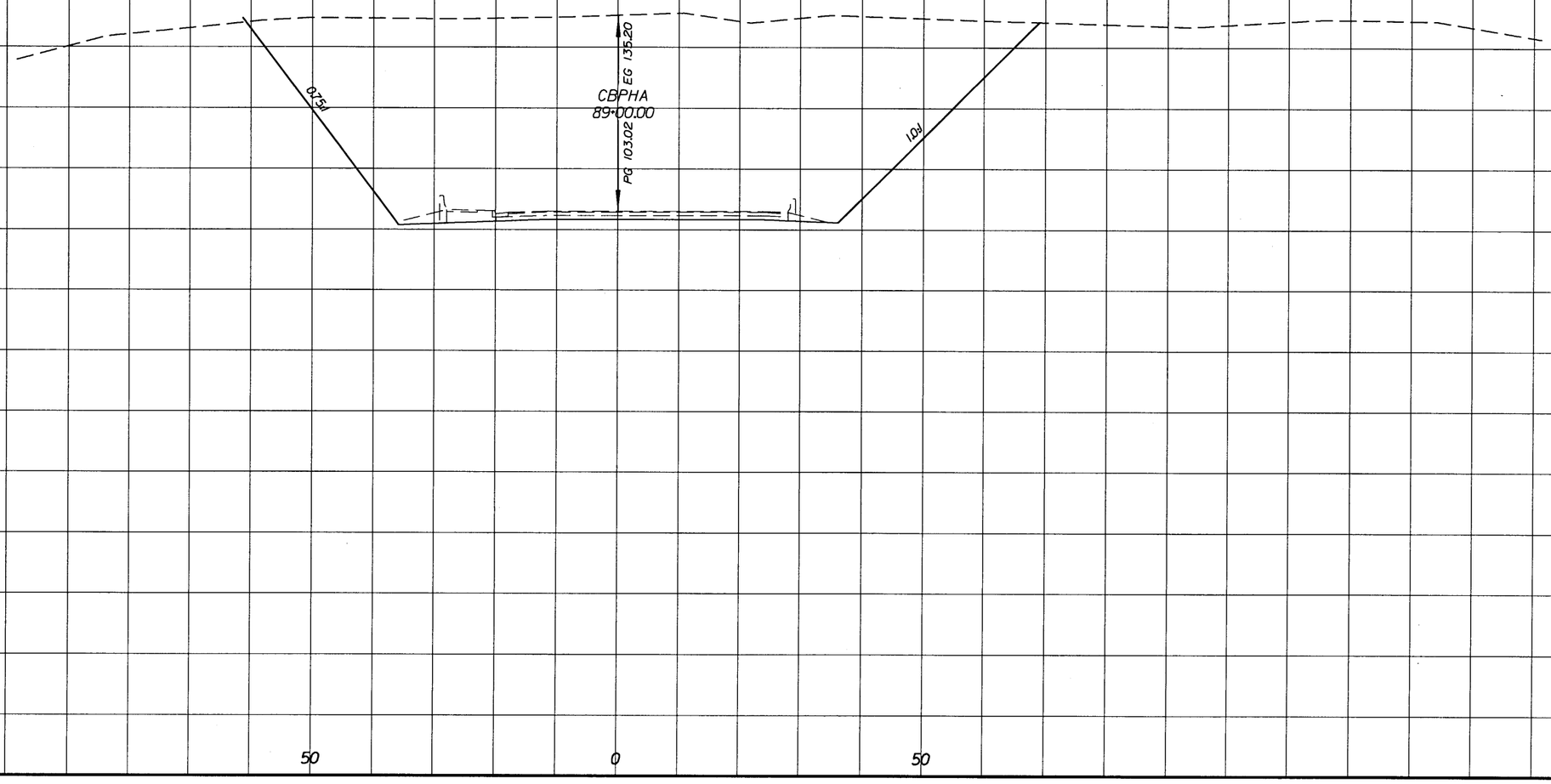

U.S. DEPARTMENT OF TRANSPORTATION
FEDERAL HIGHWAY ADMINISTRATION
EASTERN FEDERAL LANDS HIGHWAY DIVISION
STERLING, VIRGINIA

CHRISTIANSTED BY-PASS DESIGN CROSS SECTION

REG	STATE	PROJECT	SHEET NO.	TOTAL SHEETS
SE	VI	NH-66(008)	N13	193

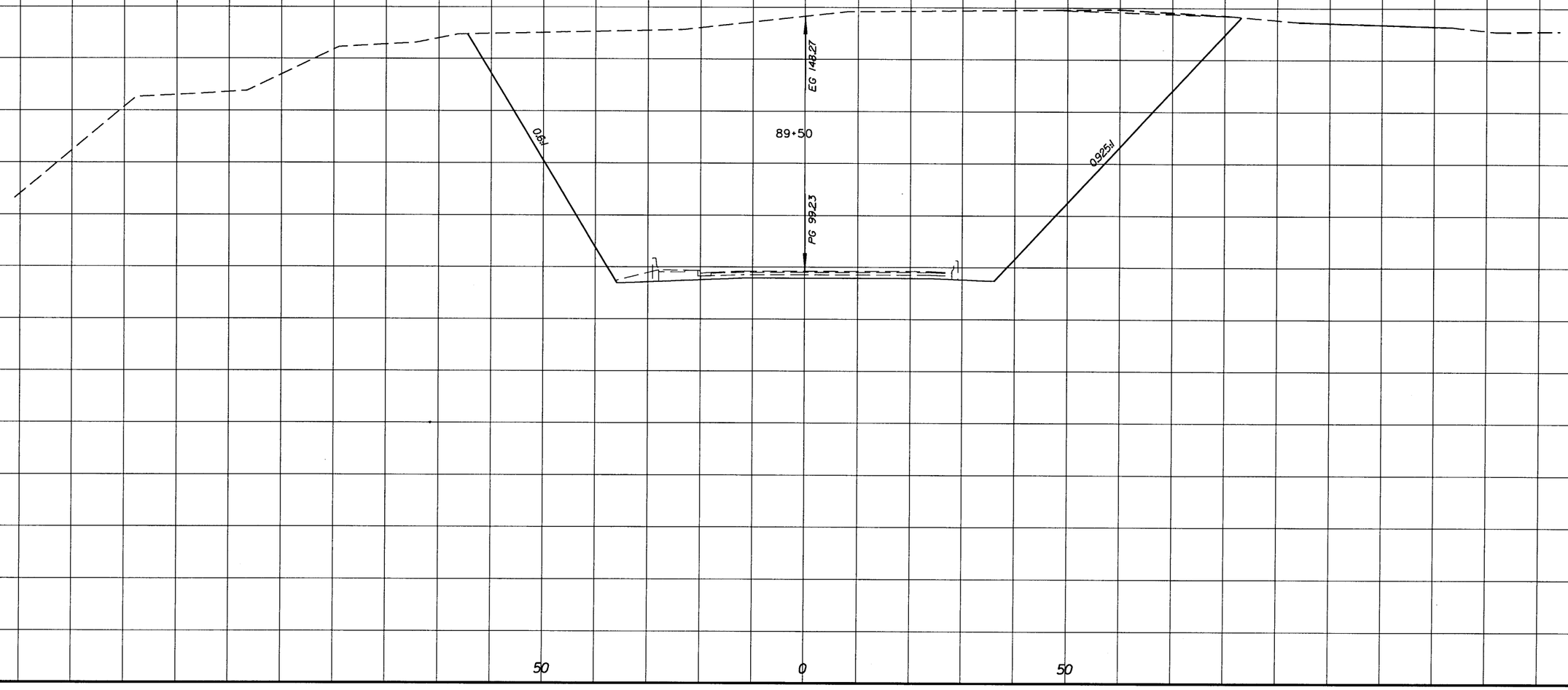

U.S. DEPARTMENT OF TRANSPORTATION
FEDERAL HIGHWAY ADMINISTRATION
EASTERN FEDERAL LANDS HIGHWAY DIVISION
STERLING, VIRGINIA

CHRISTIANSTED BY-PASS DESIGN CROSS SECTION

REG	STATE	PROJECT	SHEET NO.	TOTAL SHEETS
SE	VI	NH-66(008)	N14	193

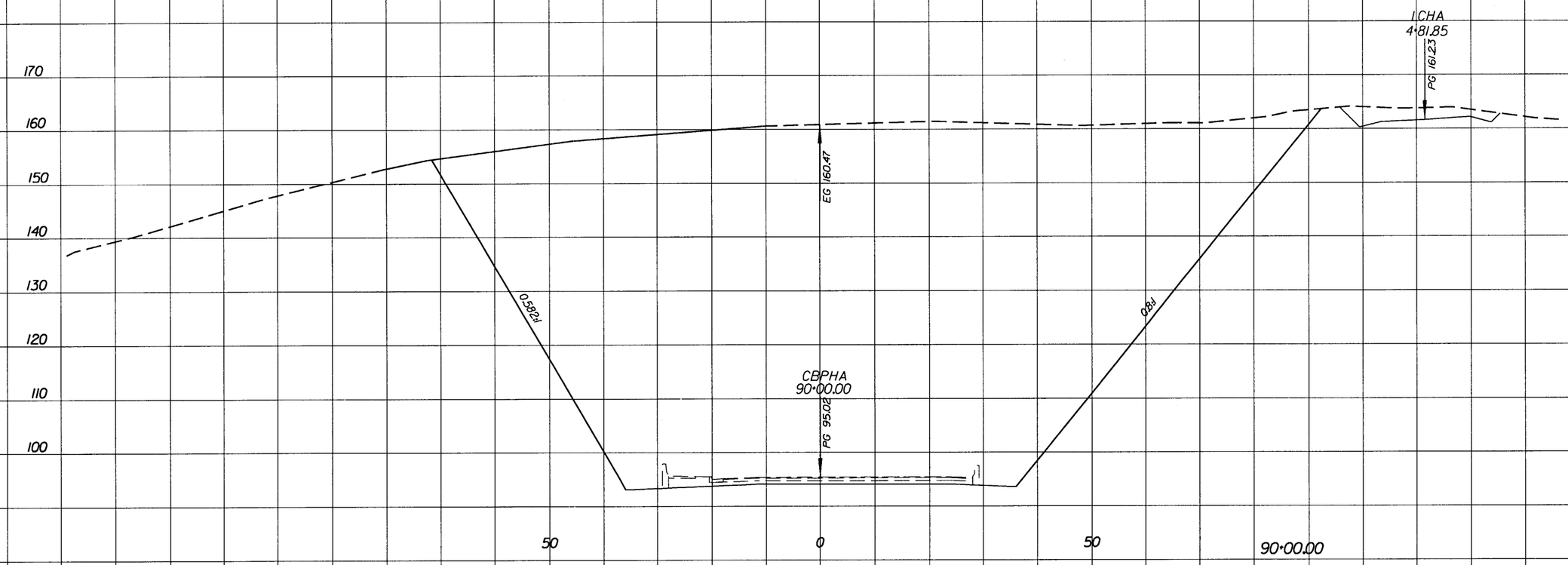

U.S. DEPARTMENT OF TRANSPORTATION
FEDERAL HIGHWAY ADMINISTRATION
EASTERN FEDERAL LANDS HIGHWAY DIVISION
STERLING, VIRGINIA

CHRISTIANSTED BY-PASS DESIGN CROSS SECTION

REG	STATE	PROJECT	SHEET NO.	TOTAL SHEETS
SE	VI	NH-66(008)	N15	193

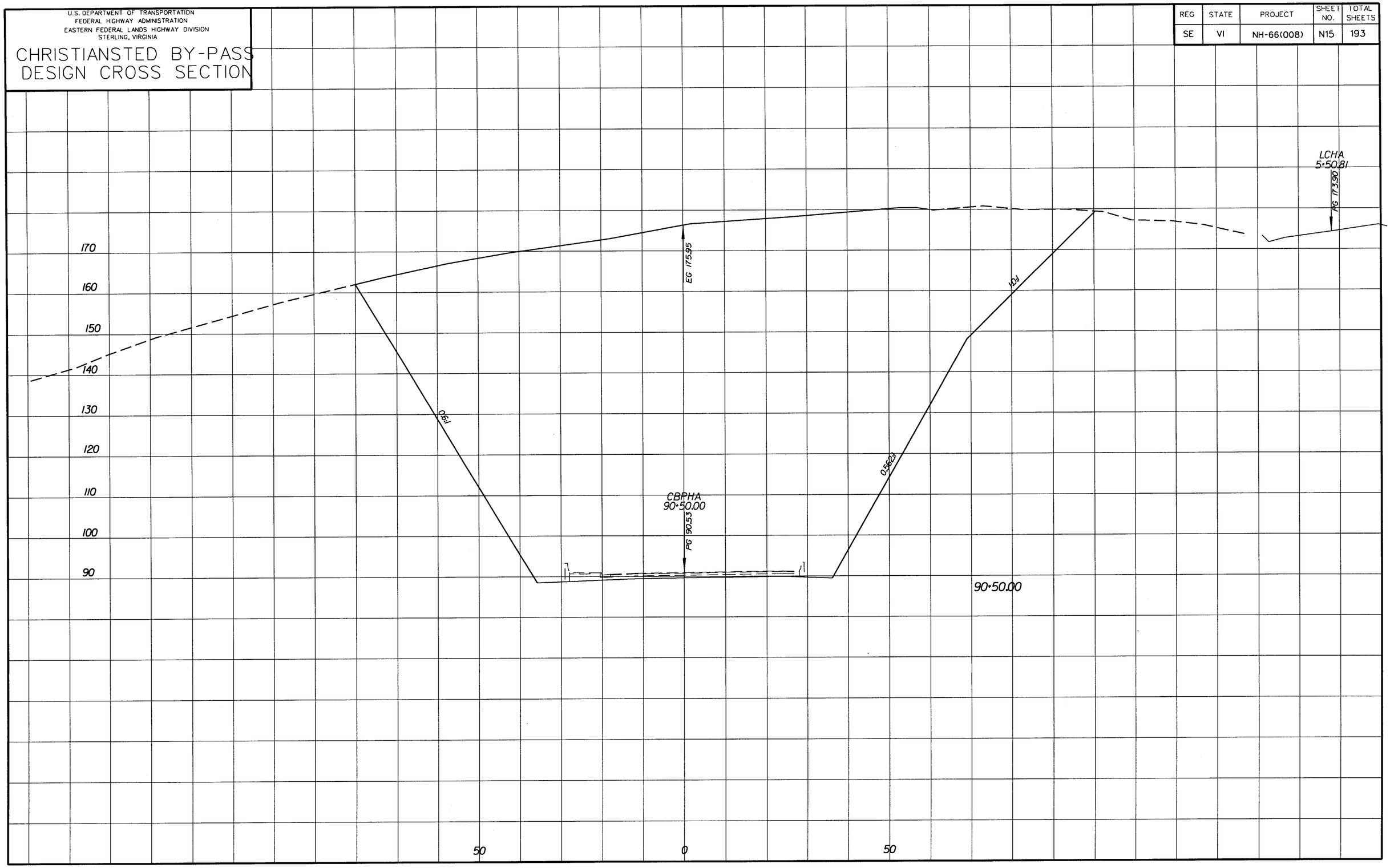

U.S. DEPARTMENT OF TRANSPORTATION
FEDERAL HIGHWAY ADMINISTRATION
EASTERN FEDERAL LANDS HIGHWAY DIVISION
STERLING, VIRGINIA

CHRISTIANSTED BY-PASS DESIGN CROSS SECTION

REG	STATE	PROJECT	SHEET NO.	TOTAL SHEETS
SE	VI	NH-66(008)	N16	193

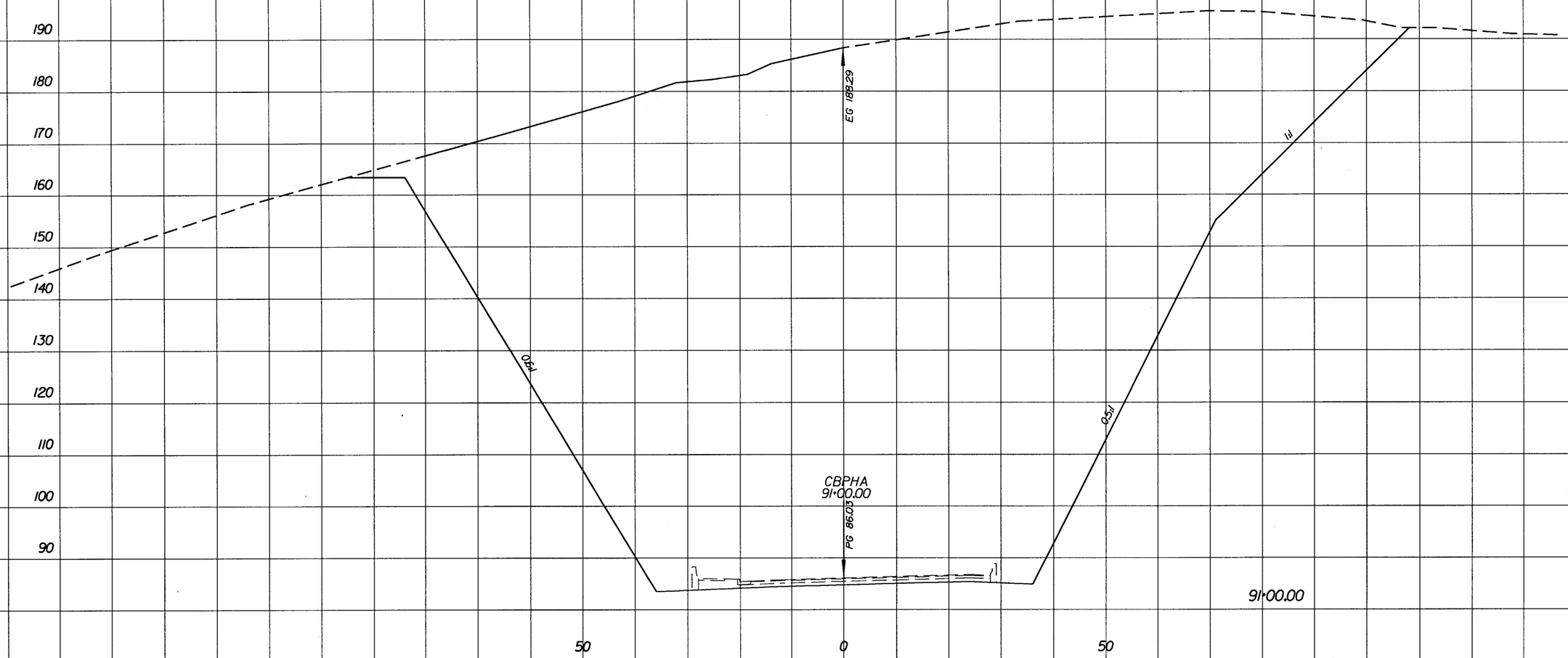

U.S. DEPARTMENT OF TRANSPORTATION
FEDERAL HIGHWAY ADMINISTRATION
EASTERN FEDERAL LANDS HIGHWAY DIVISION
STERLING, VIRGINIA

CHRISTIANSTED BY-PASS DESIGN CROSS SECTION

REG	STATE	PROJECT	SHEET NO.	TOTAL SHEETS
SE	VI	NH-66(008)	N17	193

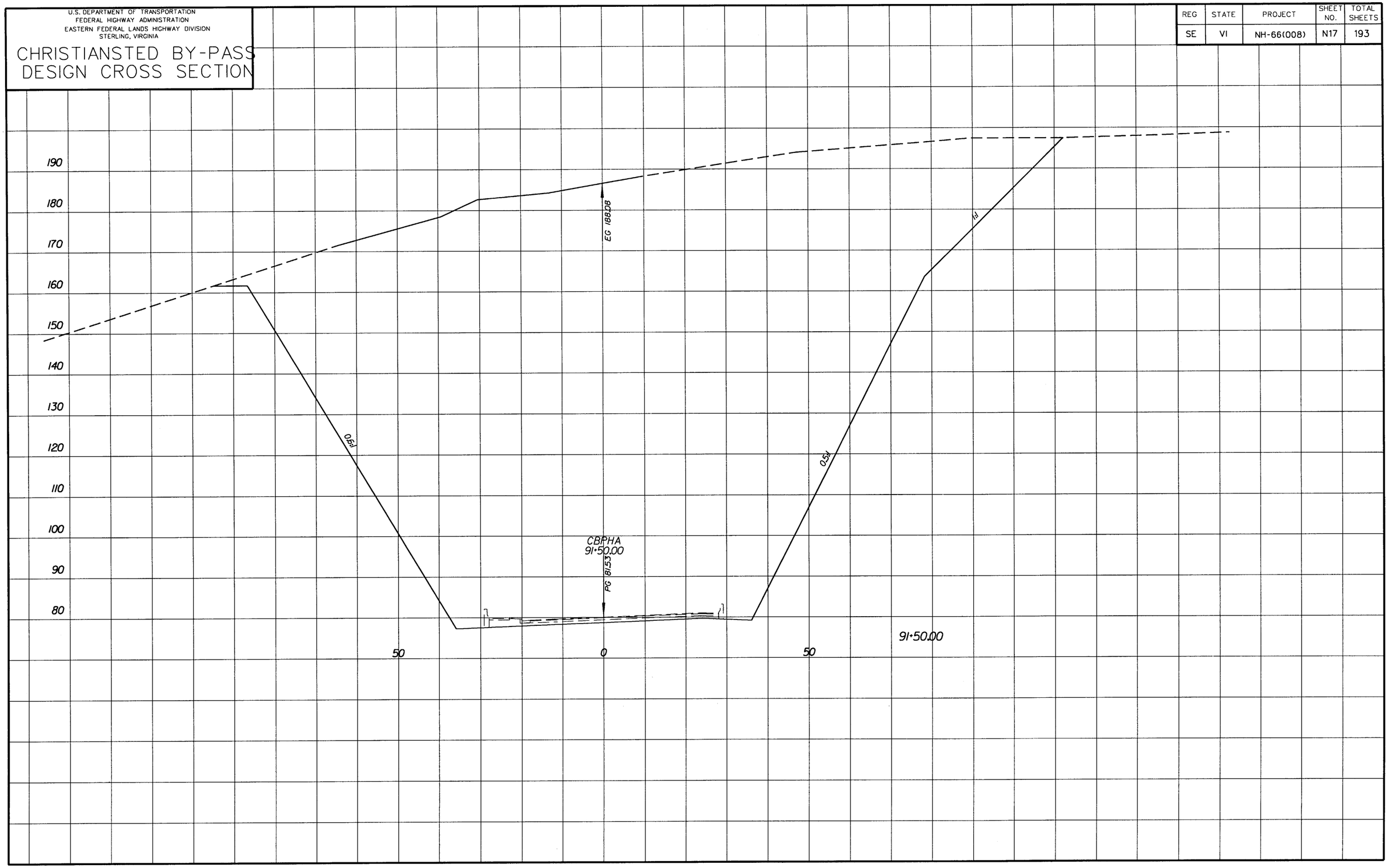

U.S. DEPARTMENT OF TRANSPORTATION
FEDERAL HIGHWAY ADMINISTRATION
EASTERN FEDERAL LANDS HIGHWAY DIVISION
STERLING, VIRGINIA

CHRISTIANSTED BY-PASS DESIGN CROSS SECTION

REG	STATE	PROJECT	SHEET NO.	TOTAL SHEETS
SE	VI	NH-66(008)	N18	193

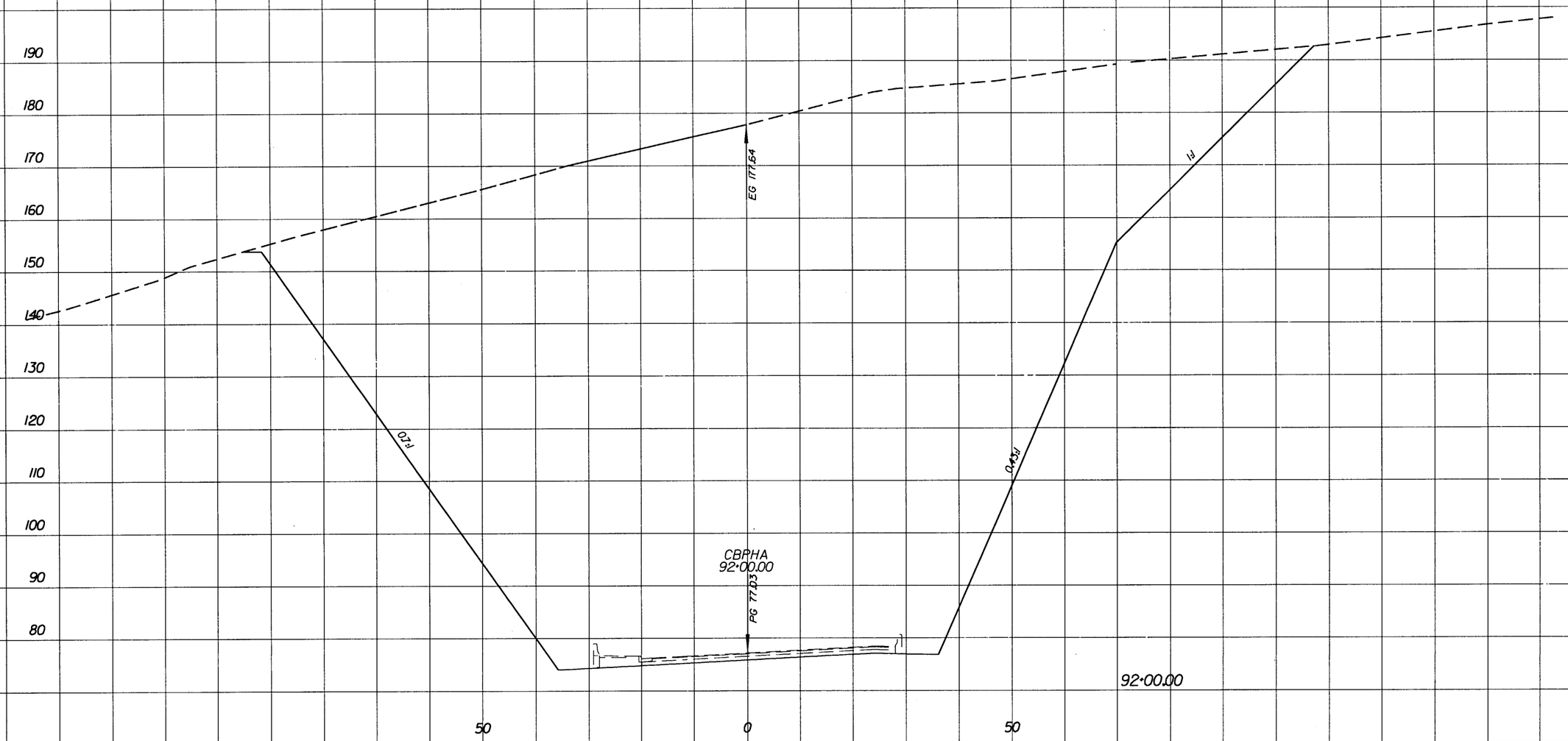

U.S. DEPARTMENT OF TRANSPORTATION
FEDERAL HIGHWAY ADMINISTRATION
EASTERN FEDERAL LANDS HIGHWAY DIVISION
STERLING, VIRGINIA

CHRISTIANSTED BY-PASS DESIGN CROSS SECTION

REG	STATE	PROJECT	SHEET NO.	TOTAL SHEETS
SE	VI	NH-66(008)	N19	193

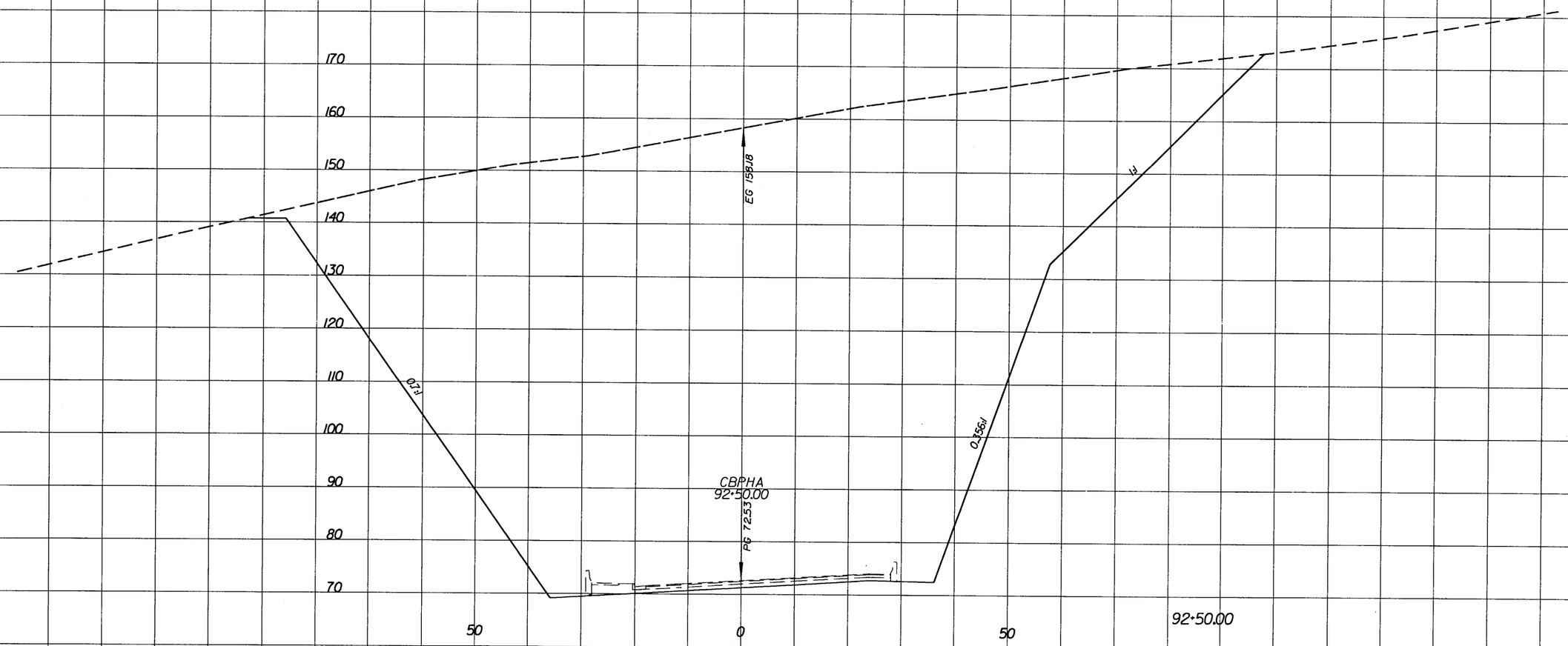

U.S. DEPARTMENT OF TRANSPORTATION
FEDERAL HIGHWAY ADMINISTRATION
EASTERN FEDERAL LANDS HIGHWAY DIVISION
STERLING, VIRGINIA

CHRISTIANSTED BY-PASS DESIGN CROSS SECTION

REG	STATE	PROJECT	SHEET NO.	TOTAL SHEETS
SE	VI	NH-66(008)	N20	193

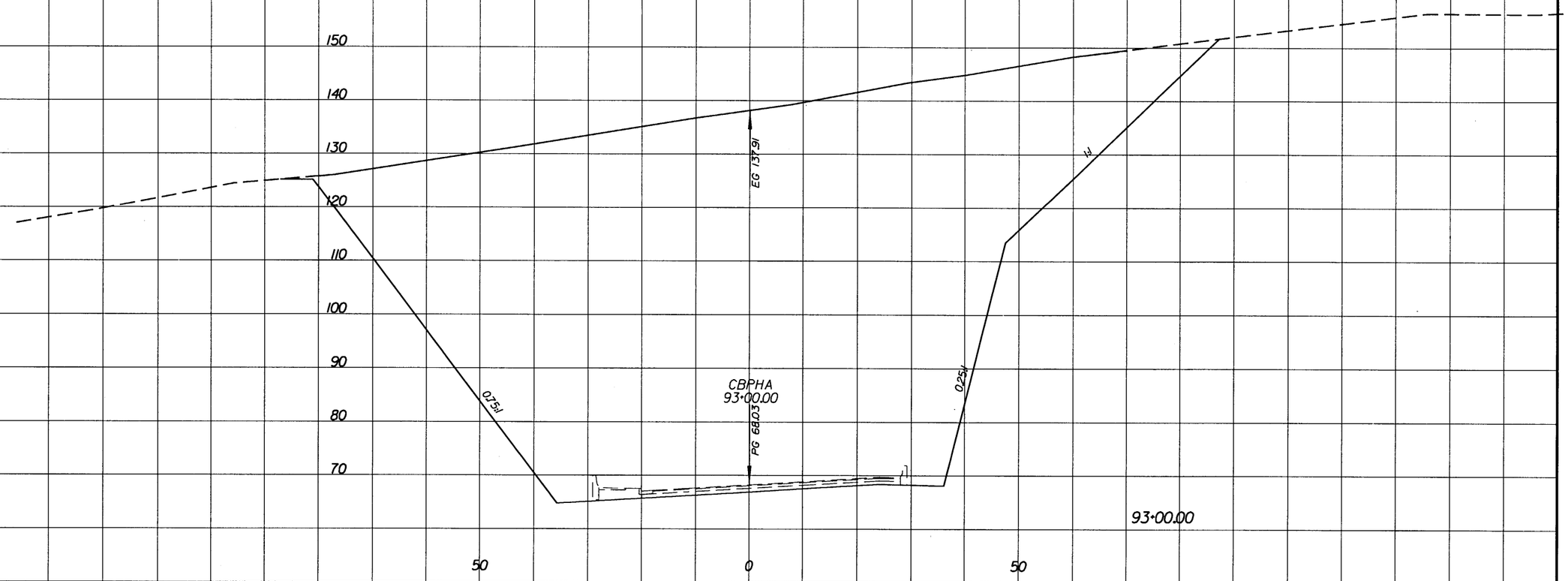

U.S. DEPARTMENT OF TRANSPORTATION
FEDERAL HIGHWAY ADMINISTRATION
EASTERN FEDERAL LANDS HIGHWAY DIVISION
STERLING, VIRGINIA

CHRISTIANSTED BY-PASS DESIGN CROSS SECTION

REG	STATE	PROJECT	SHEET NO.	TOTAL SHEETS
SE	VI	NH-66(008)	N21	193

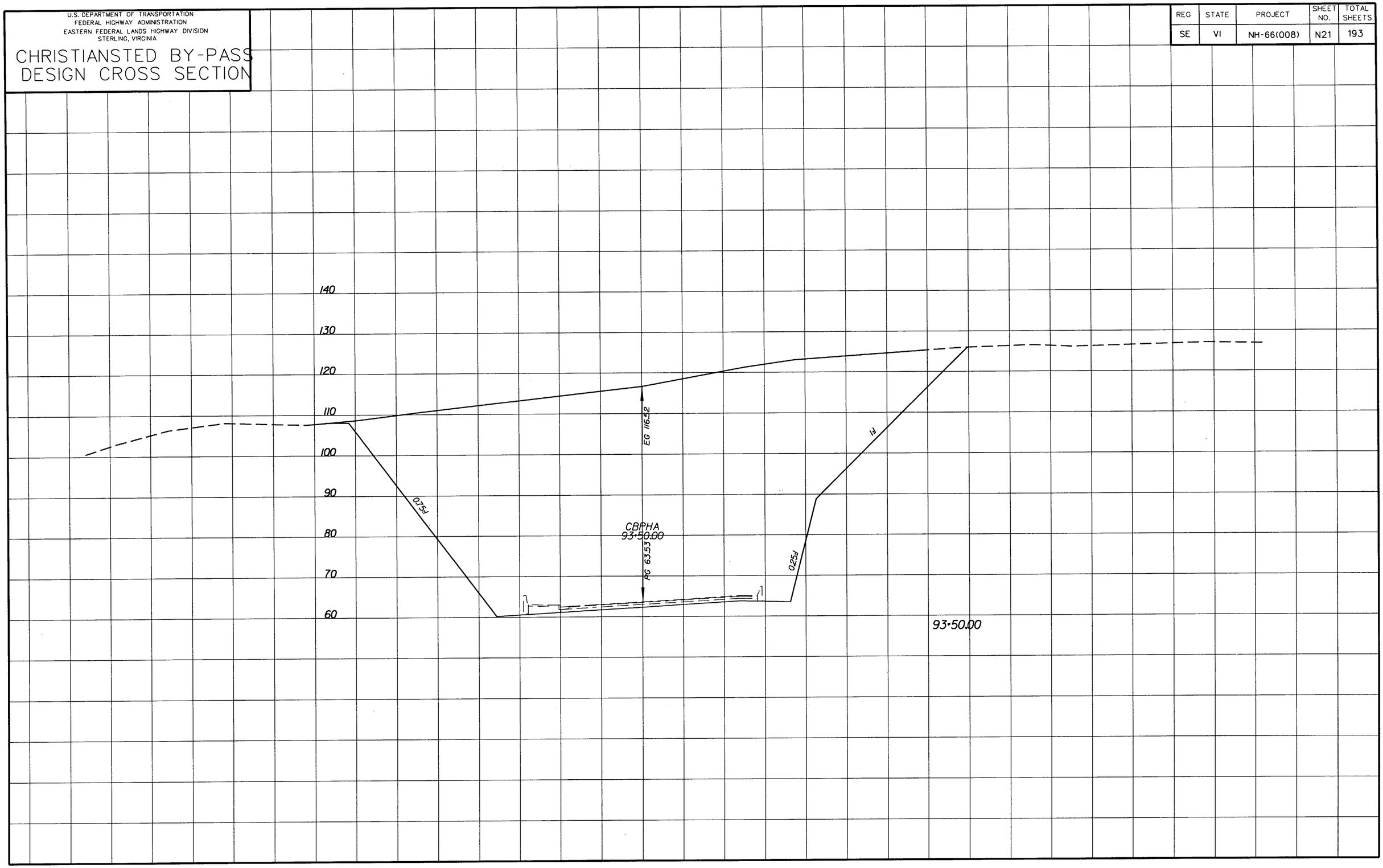

U.S. DEPARTMENT OF TRANSPORTATION
FEDERAL HIGHWAY ADMINISTRATION
EASTERN FEDERAL LANDS HIGHWAY DIVISION
STERLING, VIRGINIA

CHRISTIANSTED BY-PASS DESIGN CROSS SECTION

REG	STATE	PROJECT	SHEET NO.	TOTAL SHEETS
SE	VI	NH-66(008)	N22	193

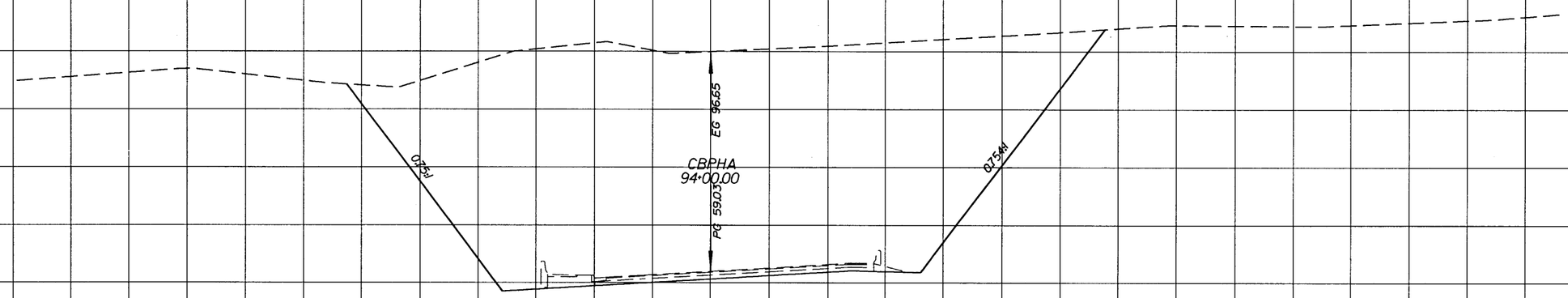

U.S. DEPARTMENT OF TRANSPORTATION
FEDERAL HIGHWAY ADMINISTRATION
EASTERN FEDERAL LANDS HIGHWAY DIVISION
STERLING, VIRGINIA

CHRISTIANSTED BY-PASS DESIGN CROSS SECTION

REG	STATE	PROJECT	SHEET NO.	TOTAL SHEETS
SE	VI	NH-66(008)	N23	193

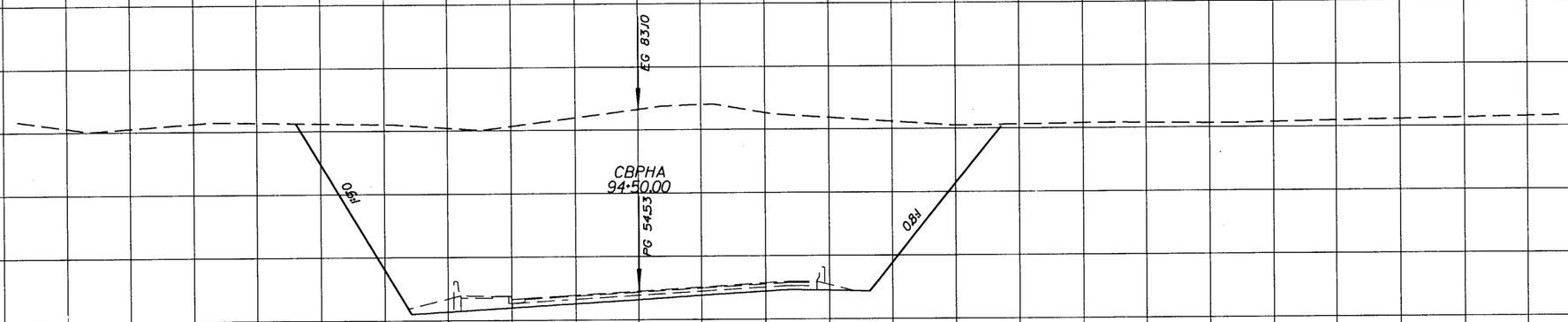

U.S. DEPARTMENT OF TRANSPORTATION
FEDERAL HIGHWAY ADMINISTRATION
EASTERN FEDERAL LANDS HIGHWAY DIVISION
STERLING, VIRGINIA

CHRISTIANSTED BY-PASS DESIGN CROSS SECTION

REG	STATE	PROJECT	SHEET NO.	TOTAL SHEETS
SE	VI	NH-66(008)	N24	193

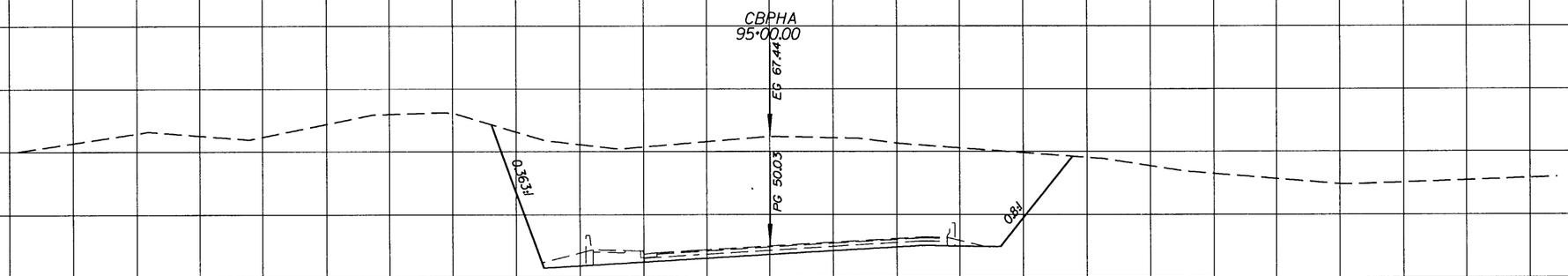

U.S. DEPARTMENT OF TRANSPORTATION
FEDERAL HIGHWAY ADMINISTRATION
EASTERN FEDERAL LANDS HIGHWAY DIVISION
STERLING, VIRGINIA

CHRISTIANSTED BY-PASS DESIGN CROSS SECTION

REG	STATE	PROJECT	SHEET NO.	TOTAL SHEETS
SE	VI	NH-66(008)	N25	193

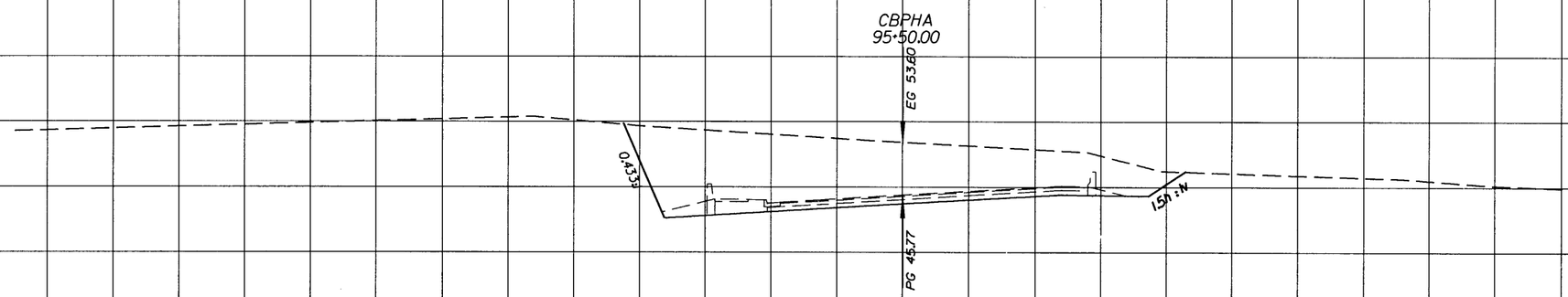

U.S. DEPARTMENT OF TRANSPORTATION
FEDERAL HIGHWAY ADMINISTRATION
EASTERN FEDERAL LANDS HIGHWAY DIVISION
STERLING, VIRGINIA

CHRISTIANSTED BY-PASS DESIGN CROSS SECTION

REG	STATE	PROJECT	SHEET NO.	TOTAL SHEETS
SE	VI	NH-66(008)	N26	193

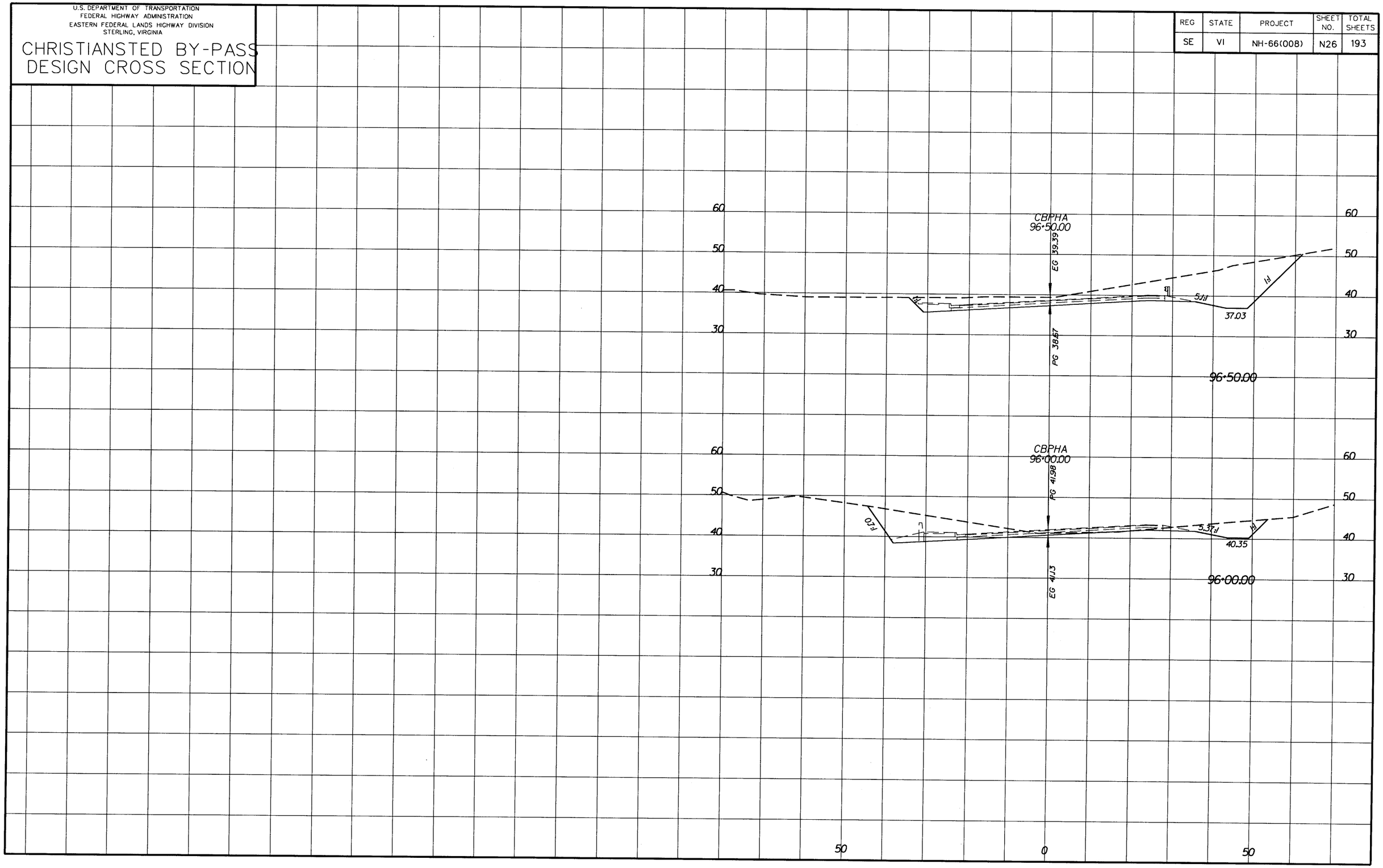

U.S. DEPARTMENT OF TRANSPORTATION
FEDERAL HIGHWAY ADMINISTRATION
EASTERN FEDERAL LANDS HIGHWAY DIVISION
STERLING, VIRGINIA

CHRISTIANSTED BY-PASS DESIGN CROSS SECTION

REG	STATE	PROJECT	SHEET NO.	TOTAL SHEETS
SE	VI	NH-66(008)	N27	193

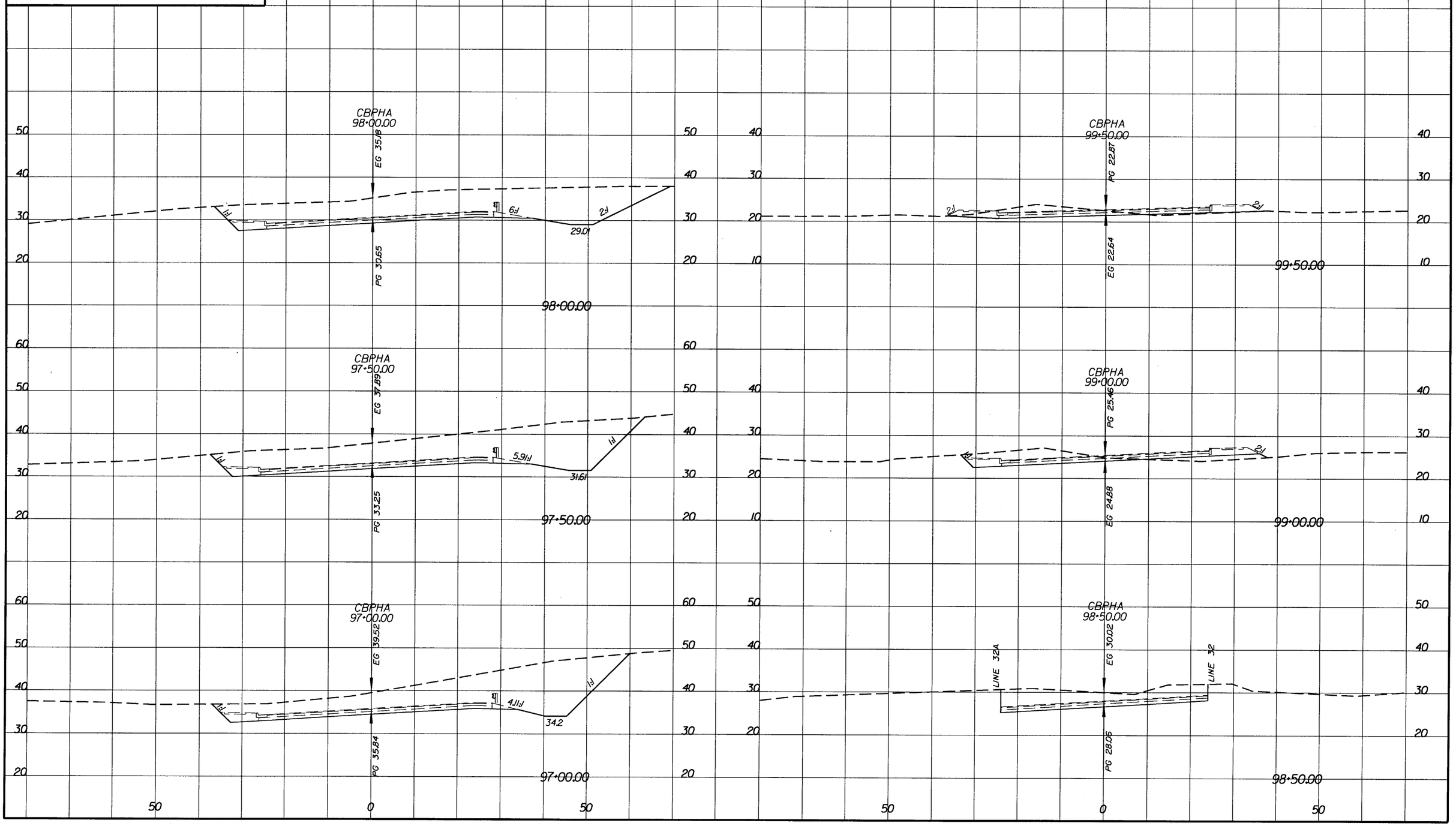

U.S. DEPARTMENT OF TRANSPORTATION
FEDERAL HIGHWAY ADMINISTRATION
EASTERN FEDERAL LANDS HIGHWAY DIVISION
STERLING, VIRGINIA

LINE II
DESIGN CROSS SECTION

REG	STATE	PROJECT	SHEET NO.	TOTAL SHEETS
SE	VI	NH-66(008)	N28	193

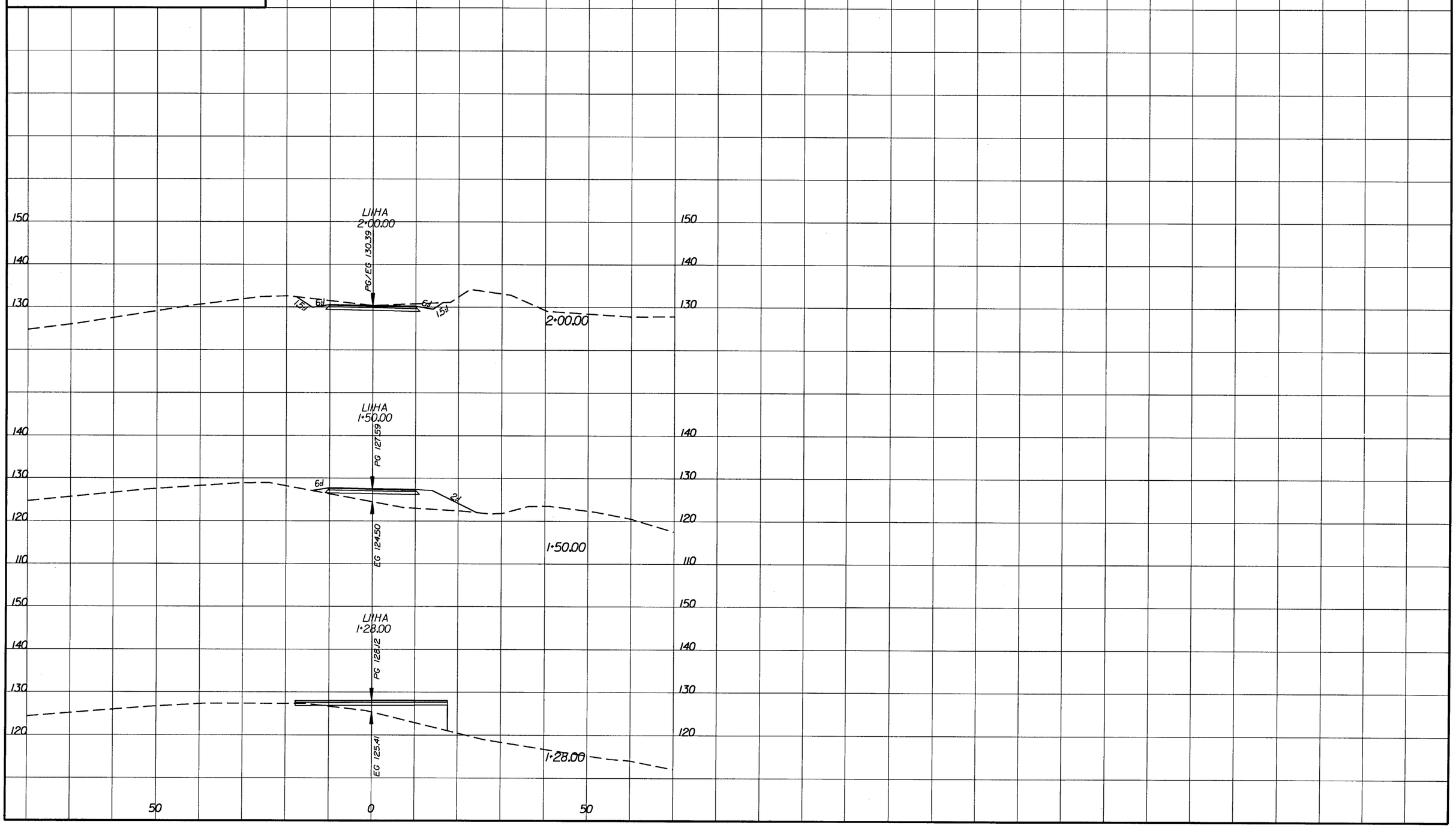

U.S. DEPARTMENT OF TRANSPORTATION
FEDERAL HIGHWAY ADMINISTRATION
EASTERN FEDERAL LANDS HIGHWAY DIVISION
STERLING, VIRGINIA

LINE A
DESIGN CROSS SECTION

REG	STATE	PROJECT	SHEET NO.	TOTAL SHEETS
SE	VI	NH-66(008)	N29	193

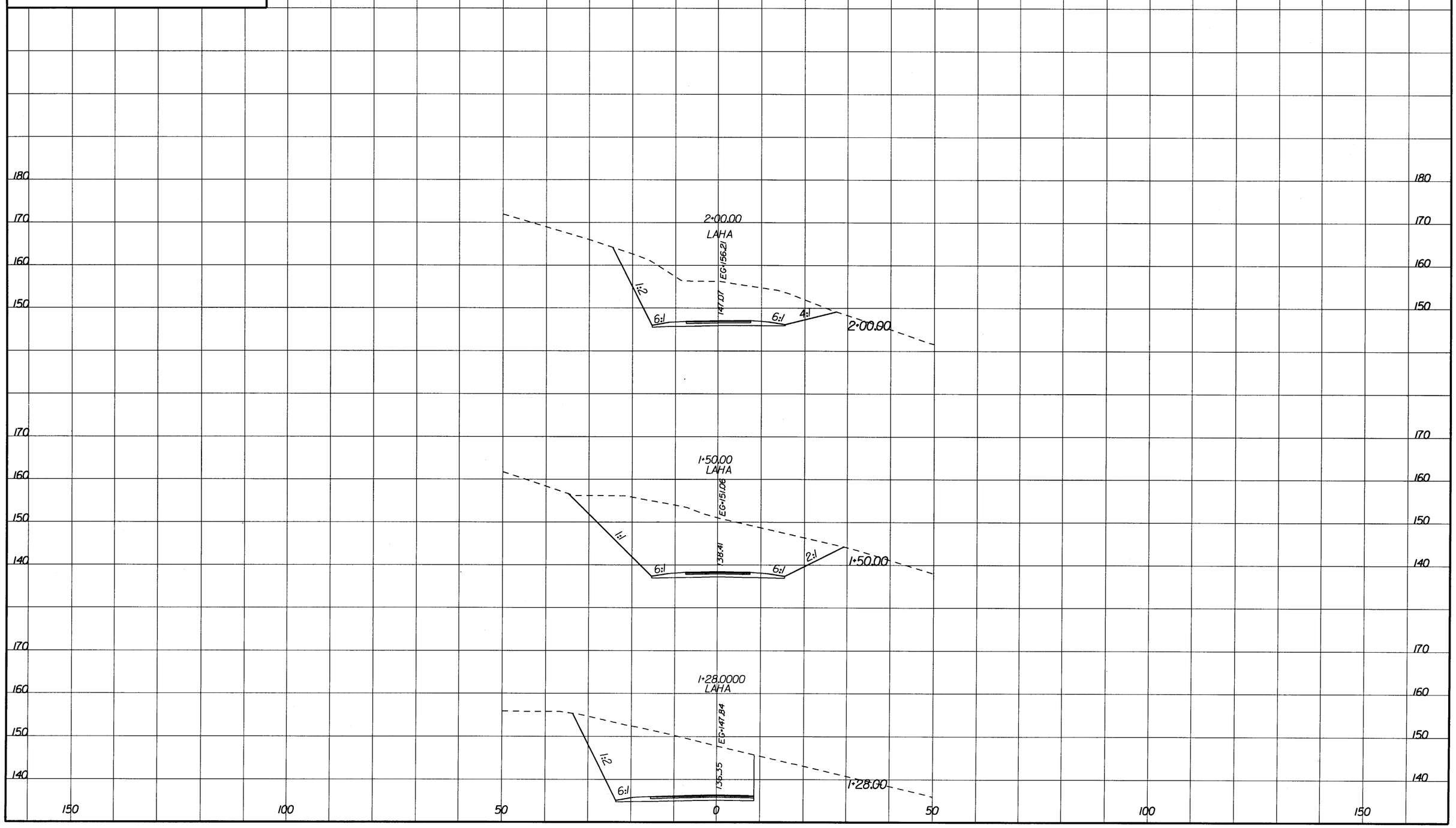

U.S. DEPARTMENT OF TRANSPORTATION
FEDERAL HIGHWAY ADMINISTRATION
EASTERN FEDERAL LANDS HIGHWAY DIVISION
STERLING, VIRGINIA

LINE A
DESIGN CROSS SECTION

REG	STATE	PROJECT	SHEET NO.	TOTAL SHEETS
SE	VI	NH-66(008)	N30	193

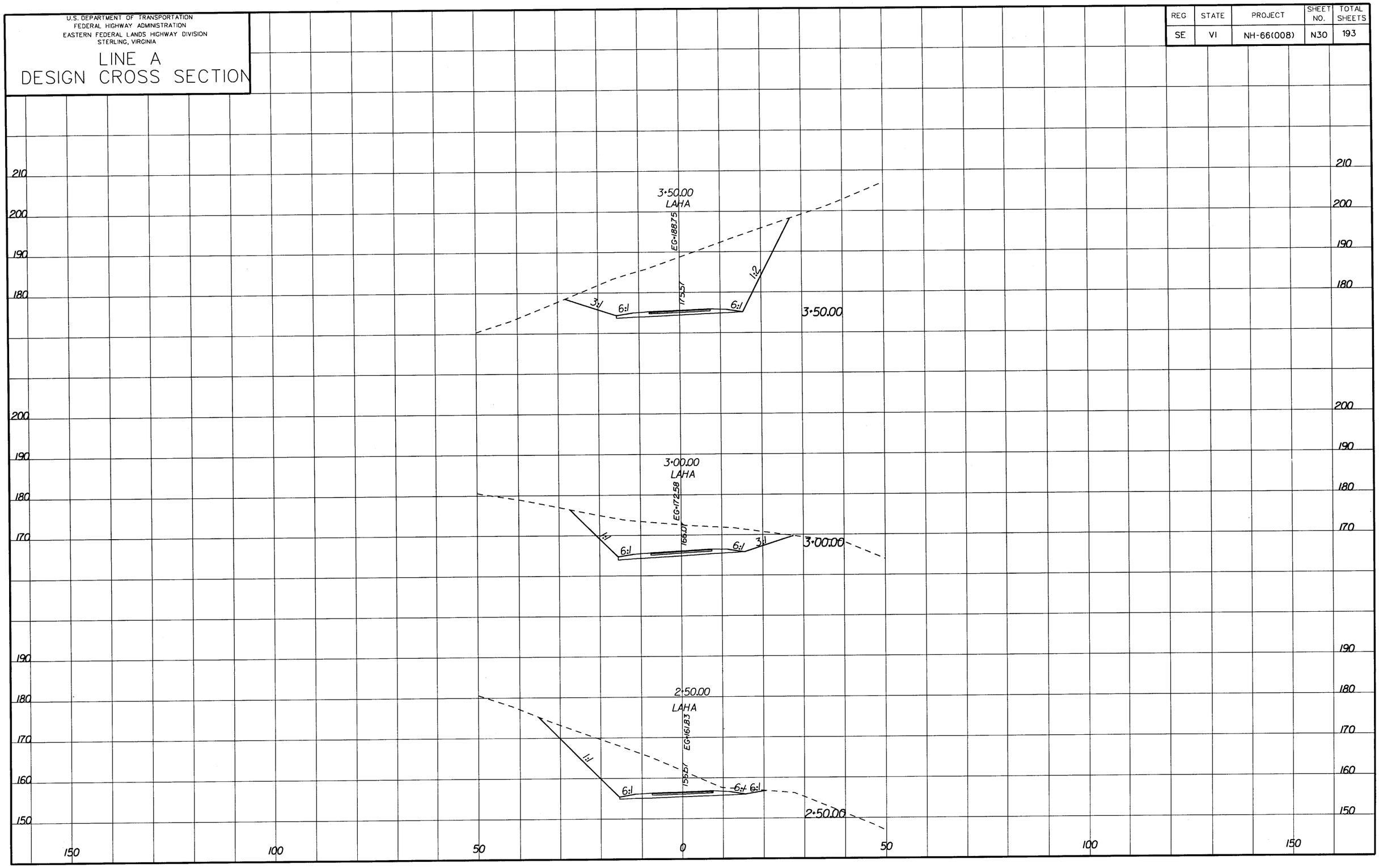

U.S. DEPARTMENT OF TRANSPORTATION
FEDERAL HIGHWAY ADMINISTRATION
EASTERN FEDERAL LANDS HIGHWAY DIVISION
STERLING, VIRGINIA

LINE A DESIGN CROSS SECTION

REG	STATE	PROJECT	SHEET NO.	TOTAL SHEETS
SE	VI	NH-66(008)	N31	193

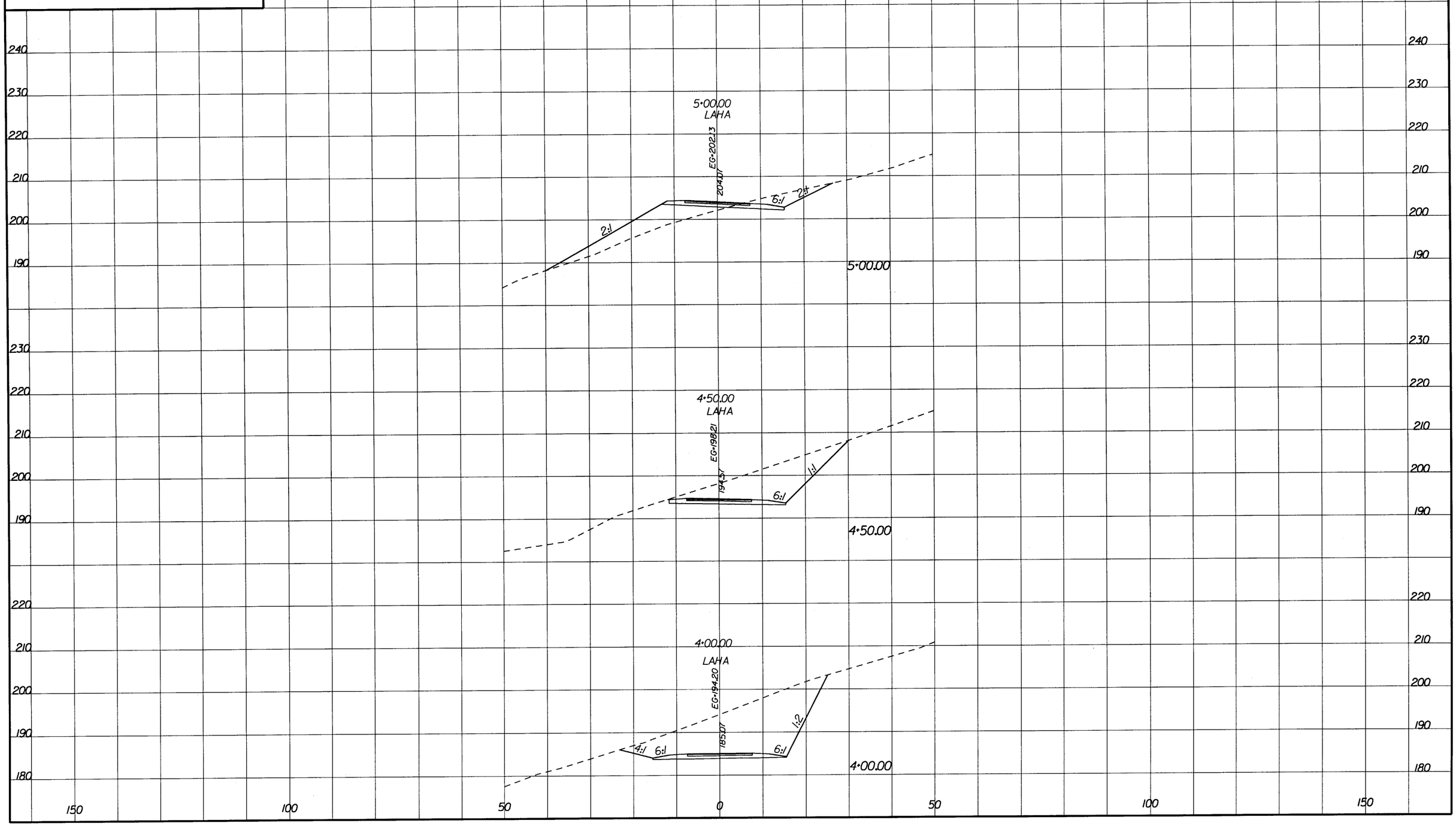

U.S. DEPARTMENT OF TRANSPORTATION
FEDERAL HIGHWAY ADMINISTRATION
EASTERN FEDERAL LANDS HIGHWAY DIVISION
STERLING, VIRGINIA

LINE A
DESIGN CROSS SECTION

REG	STATE	PROJECT	SHEET NO.	TOTAL SHEETS
SE	VI	NH-66(008)	N32	193

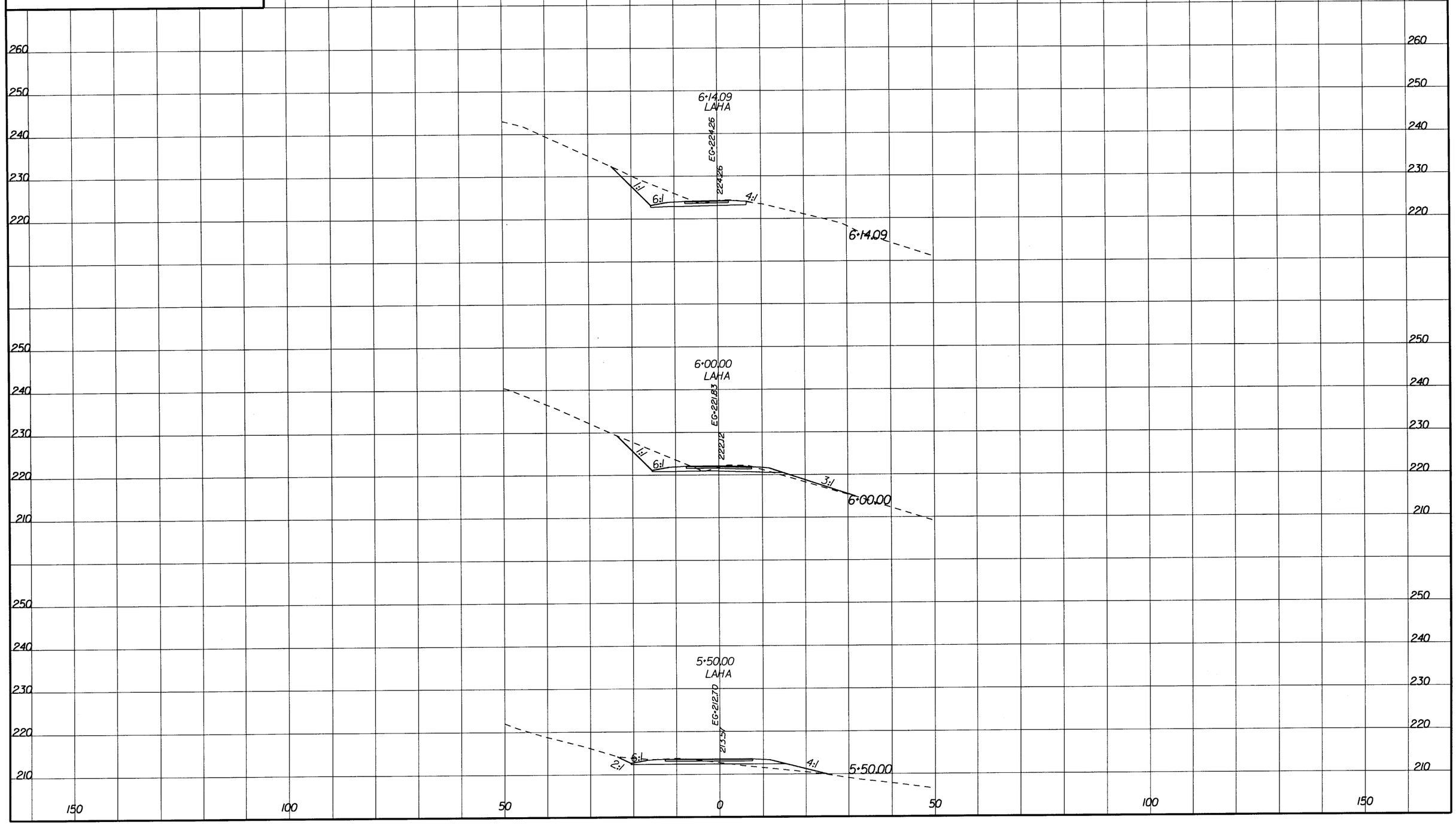

U.S. DEPARTMENT OF TRANSPORTATION
FEDERAL HIGHWAY ADMINISTRATION
EASTERN FEDERAL LANDS HIGHWAY DIVISION
STERLING, VIRGINIA

LINE B
DESIGN CROSS SECTION

REG	STATE	PROJECT	SHEET NO.	TOTAL SHEETS
SE	VI	NH-66(008)	N33	193

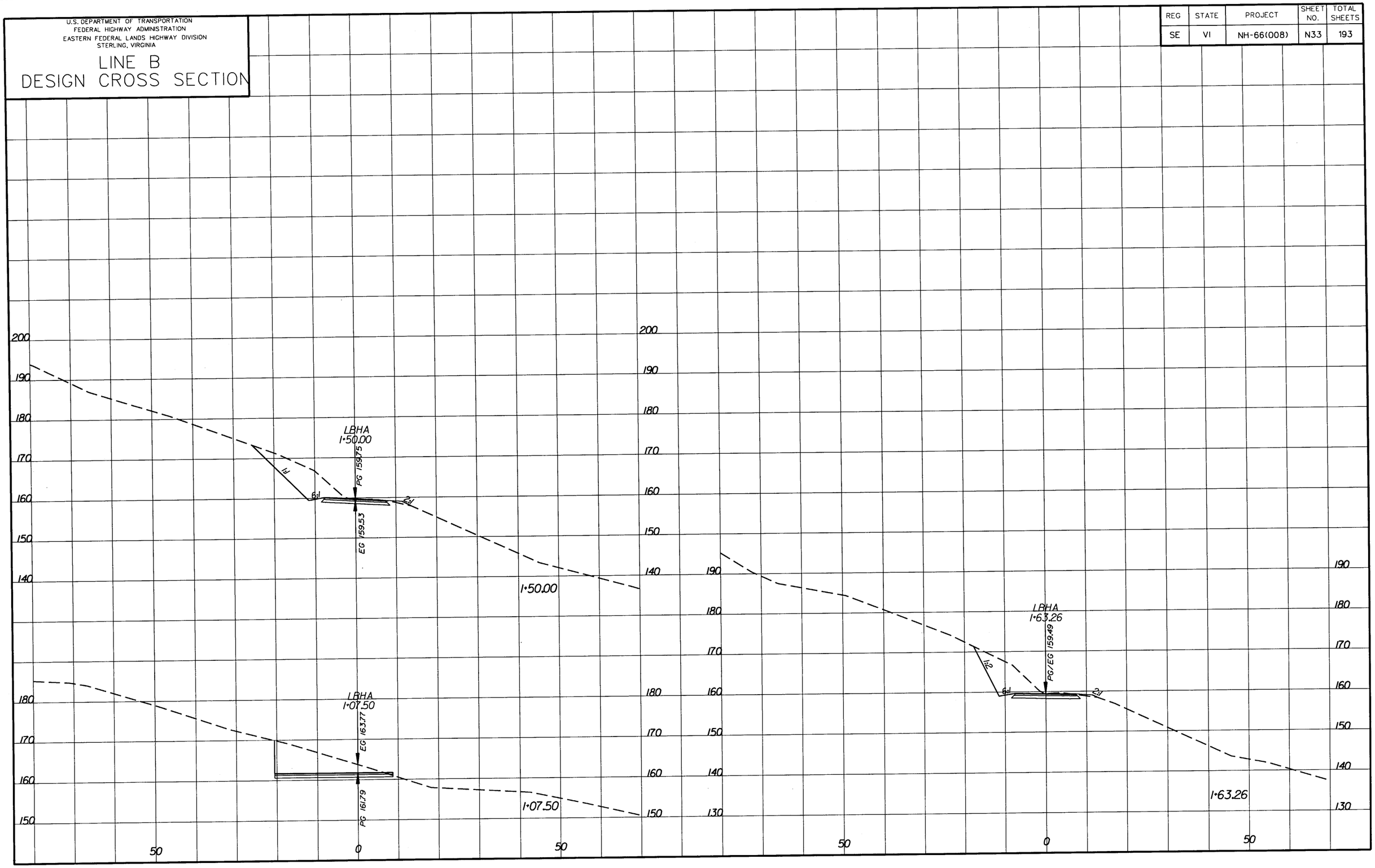

U.S. DEPARTMENT OF TRANSPORTATION
FEDERAL HIGHWAY ADMINISTRATION
EASTERN FEDERAL LANDS HIGHWAY DIVISION
STERLING, VIRGINIA

LINE C
DESIGN CROSS SECTION

REG	STATE	PROJECT	SHEET NO.	TOTAL SHEETS
SE	VI	NH-66(008)	N34	193

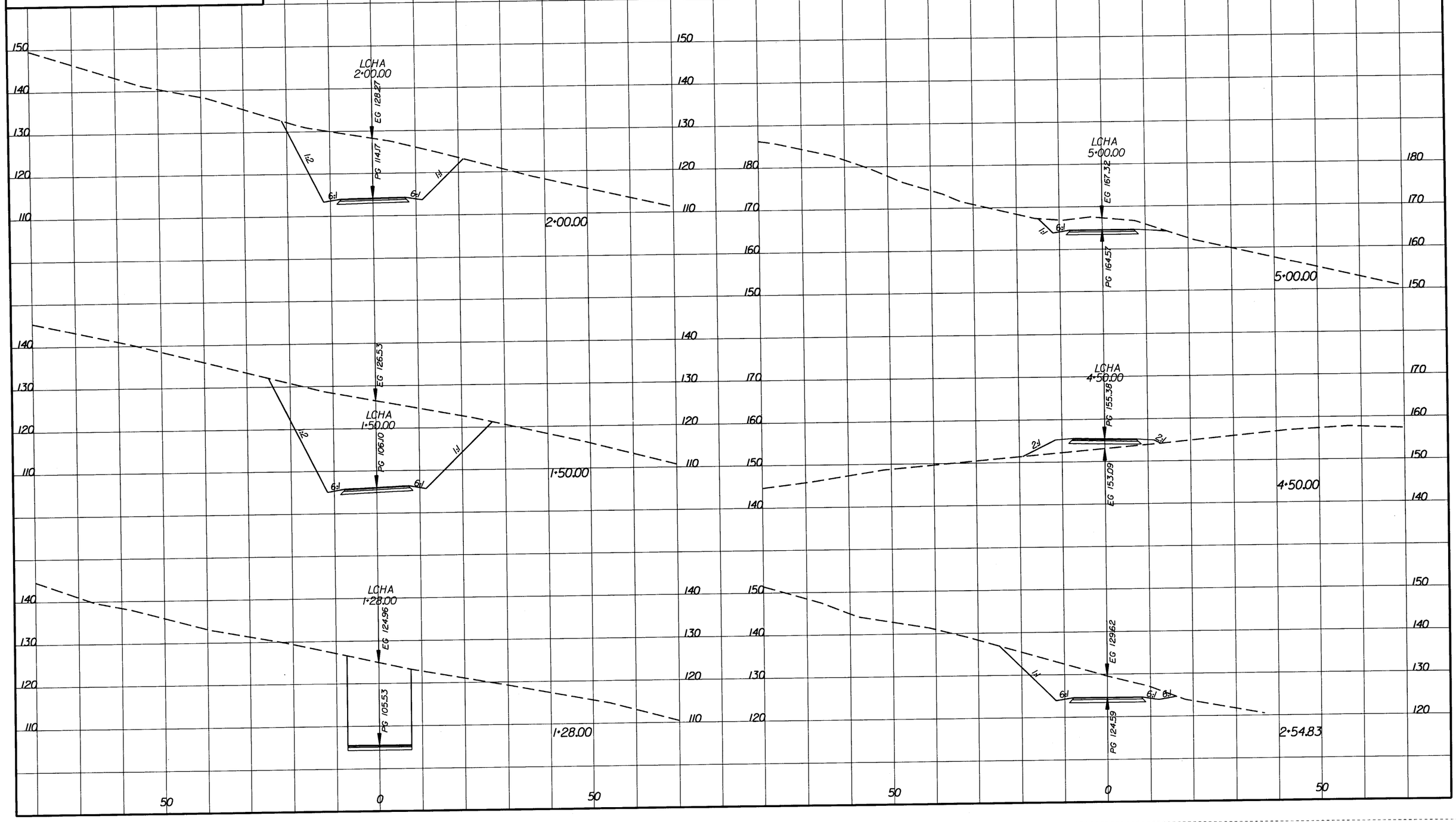

U.S. DEPARTMENT OF TRANSPORTATION
FEDERAL HIGHWAY ADMINISTRATION
EASTERN FEDERAL LANDS HIGHWAY DIVISION
STERLING, VIRGINIA

LINE C
DESIGN CROSS SECTION

REG	STATE	PROJECT	SHEET NO.	TOTAL SHEETS
SE	VI	NH-66(008)	N35	193

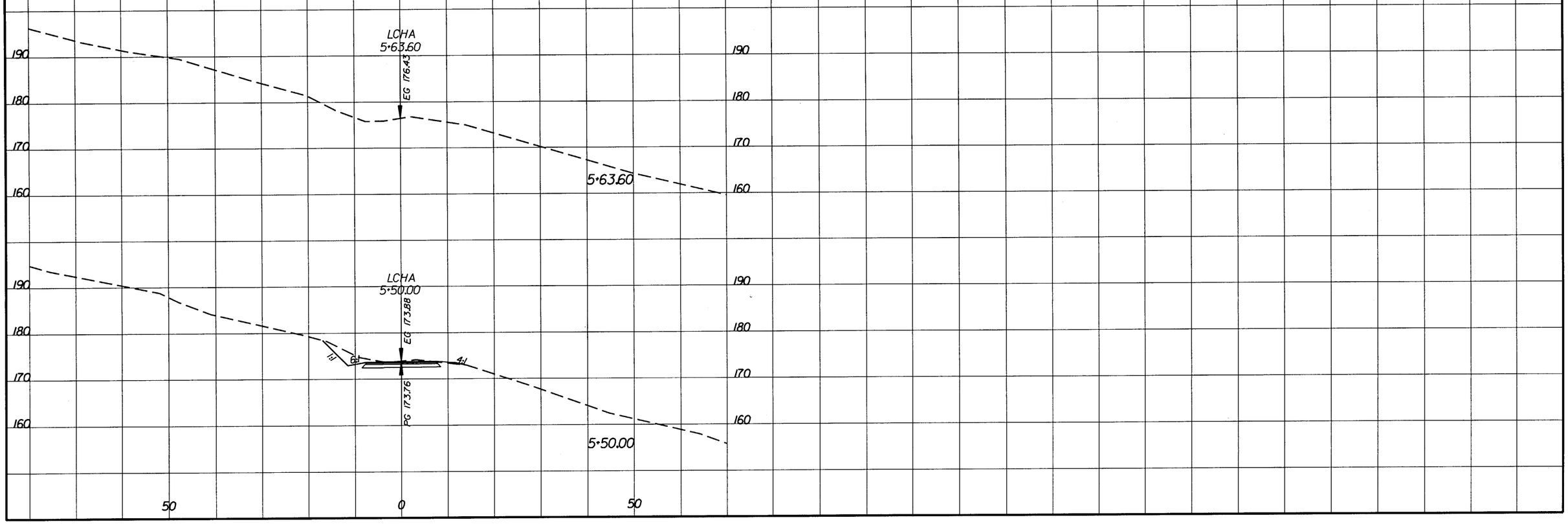

U.S. DEPARTMENT OF TRANSPORTATION
FEDERAL HIGHWAY ADMINISTRATION
EASTERN FEDERAL LANDS HIGHWAY DIVISION
STERLING, VIRGINIA

LINE 32
DESIGN CROSS SECTION

REG	STATE	PROJECT	SHEET NO.	TOTAL SHEETS
SE	VI	NH-66(008)	N36	193

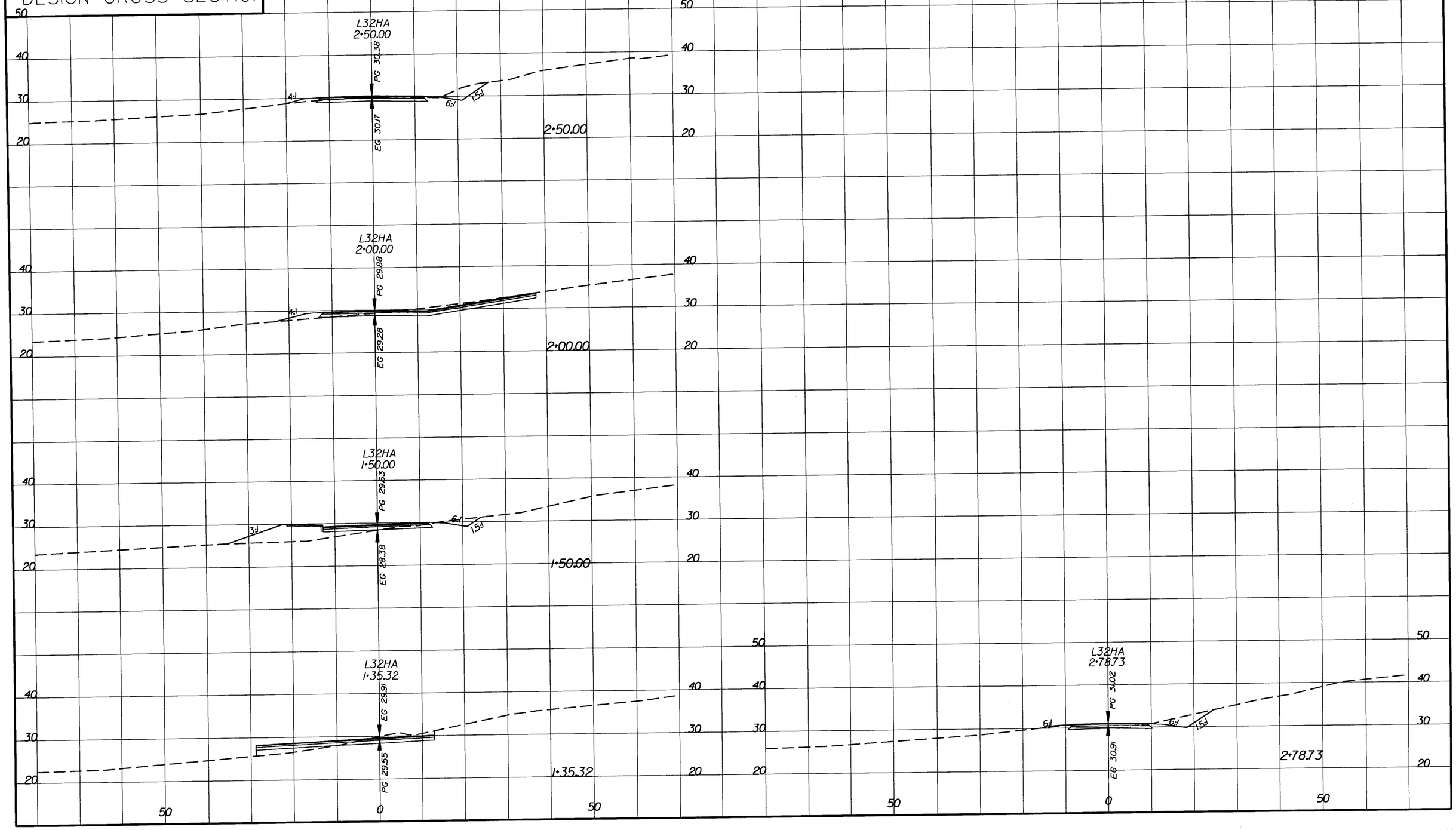

U.S. DEPARTMENT OF TRANSPORTATION
FEDERAL HIGHWAY ADMINISTRATION
EASTERN FEDERAL LANDS HIGHWAY DIVISION
STERLING, VIRGINIA

LINE 32A
DESIGN CROSS SECTION

REG	STATE	PROJECT	SHEET NO.	TOTAL SHEETS
SE	VI	NH-66(008)	N37	193

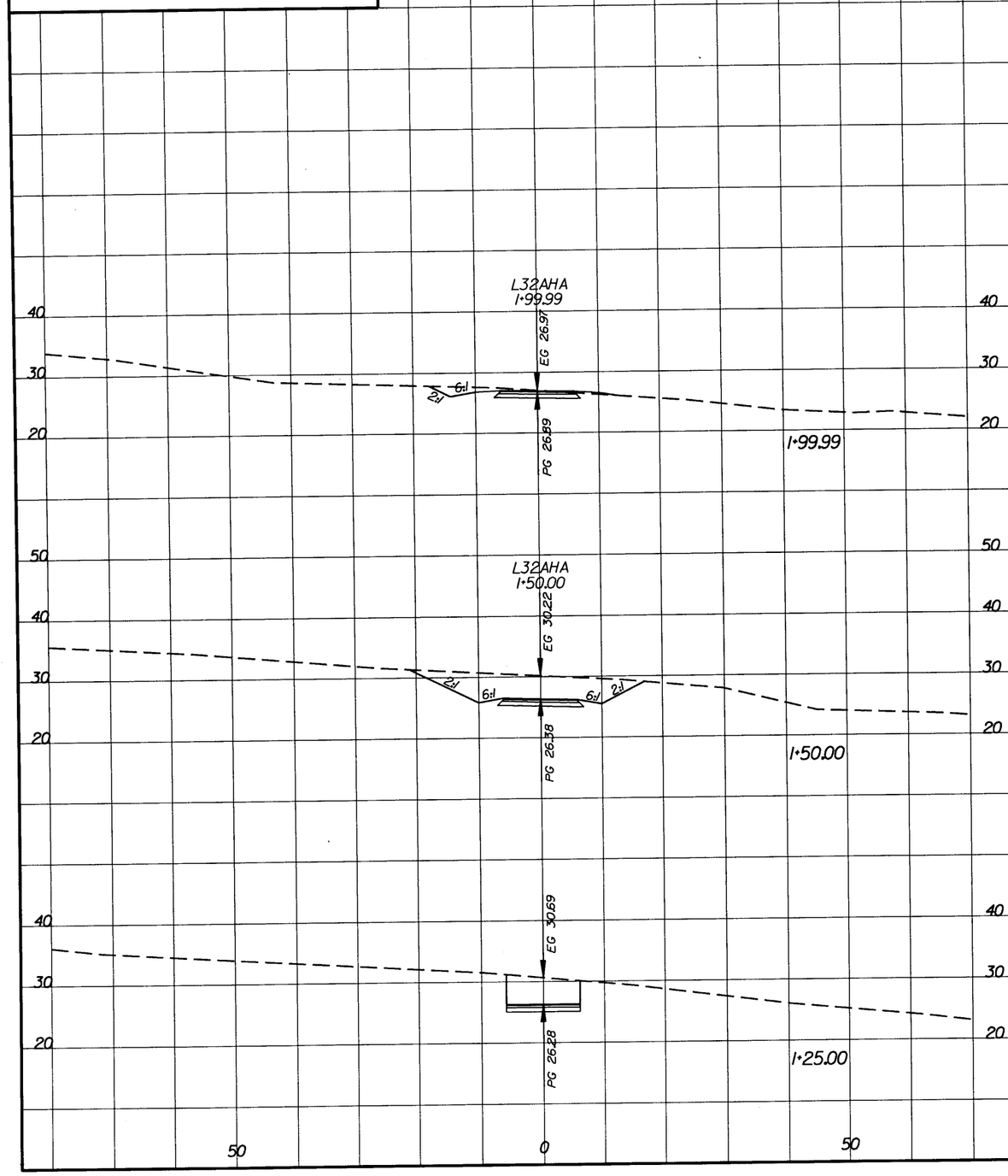

U.S. DEPARTMENT OF TRANSPORTATION
FEDERAL HIGHWAY ADMINISTRATION
EASTERN FEDERAL LANDS HIGHWAY DIVISION
STERLING, VIRGINIA

LINE A1
DESIGN CROSS SECTION

REG	STATE	PROJECT	SHEET NO.	TOTAL SHEETS
SE	VI	NH-66(008)	N38	193

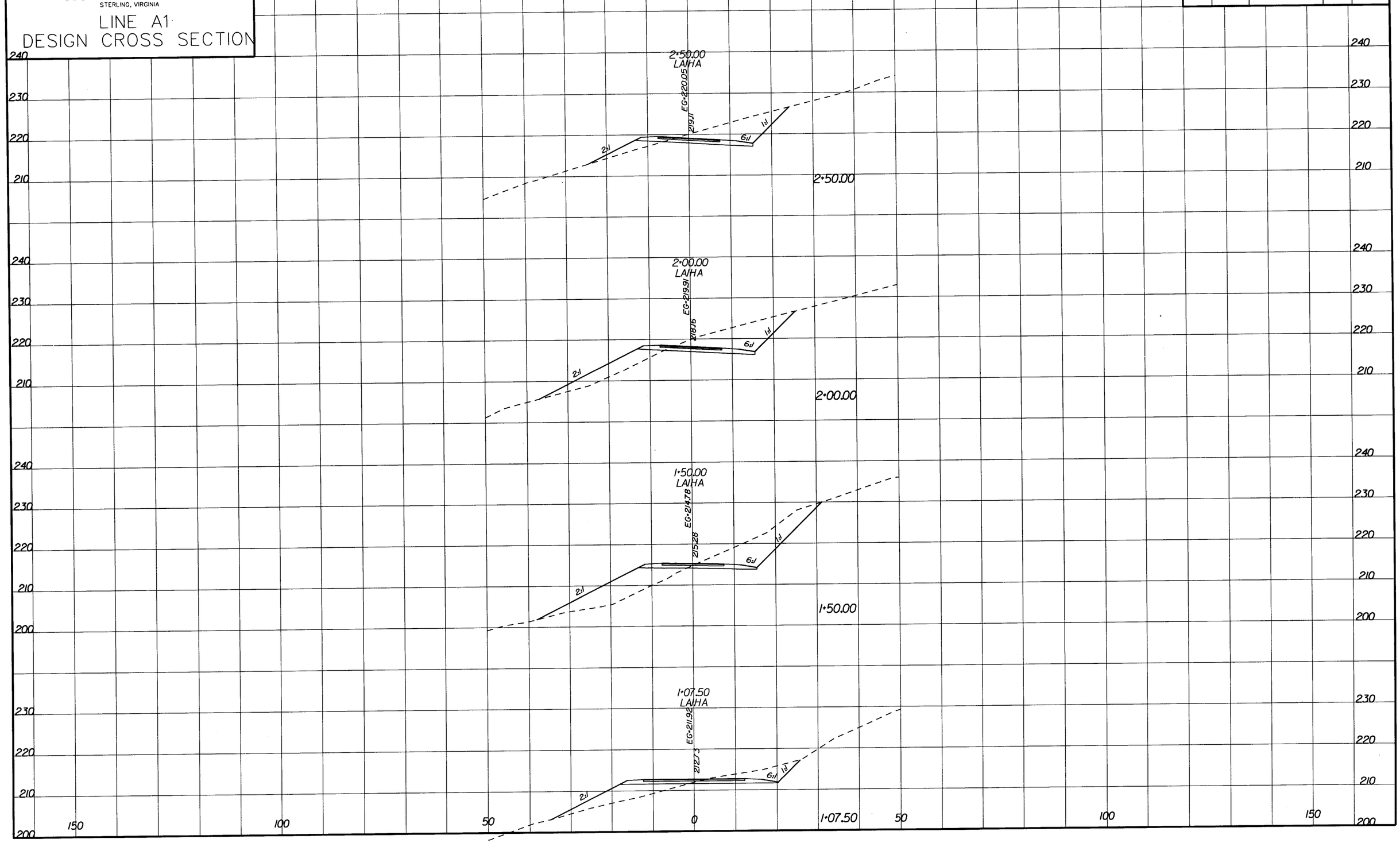

U.S. DEPARTMENT OF TRANSPORTATION
FEDERAL HIGHWAY ADMINISTRATION
EASTERN FEDERAL LANDS HIGHWAY DIVISION
STERLING, VIRGINIA

LINE A1
DESIGN CROSS SECTION

REG	STATE	PROJECT	SHEET NO.	TOTAL SHEETS
SE	VI	NH-66(008)	N39	193

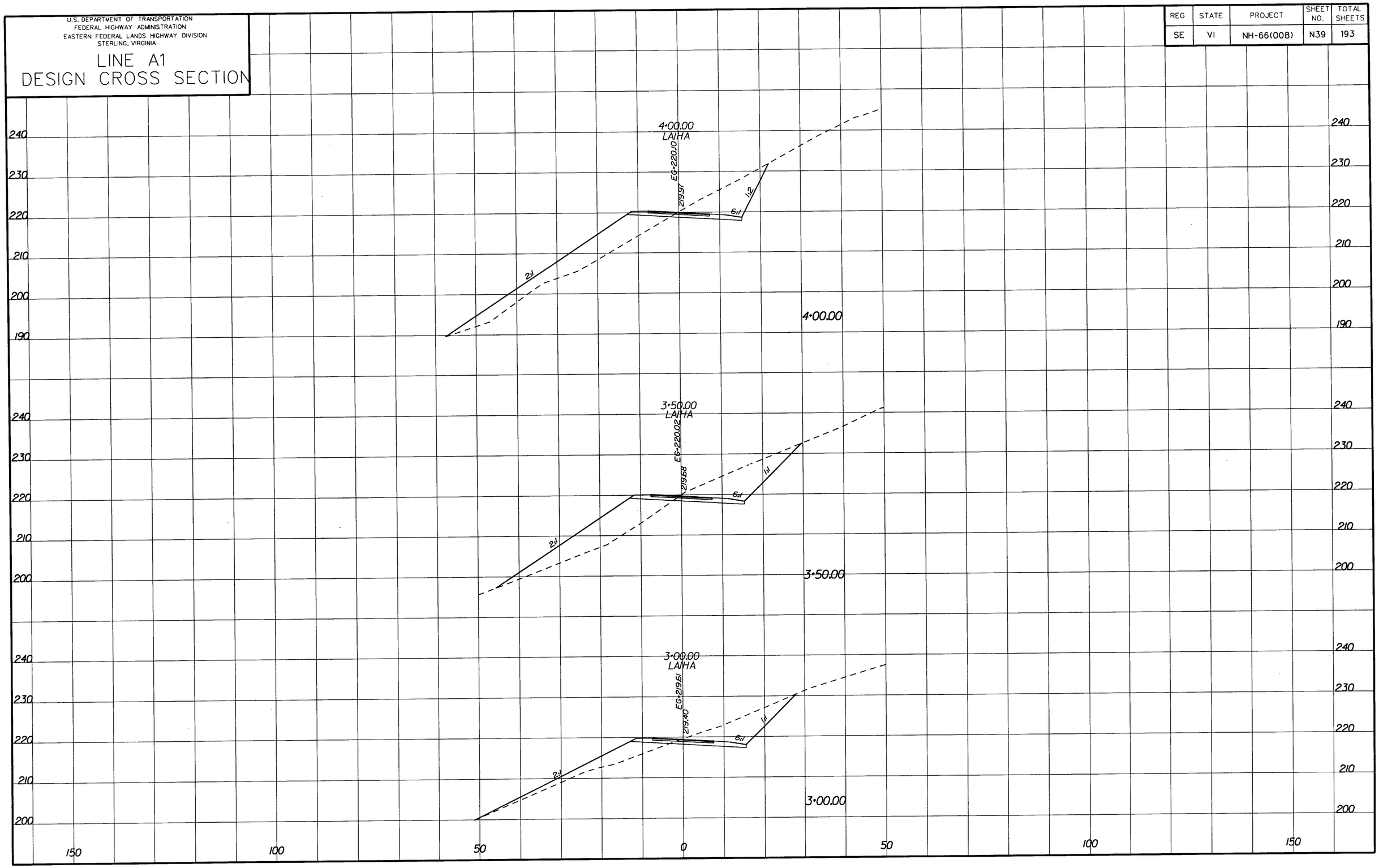

U.S. DEPARTMENT OF TRANSPORTATION
FEDERAL HIGHWAY ADMINISTRATION
EASTERN FEDERAL LANDS HIGHWAY DIVISION
STERLING, VIRGINIA

LINE A1
DESIGN CROSS SECTION

REG	STATE	PROJECT	SHEET NO.	TOTAL SHEETS
SE	VI	NH-66(008)	N40	193

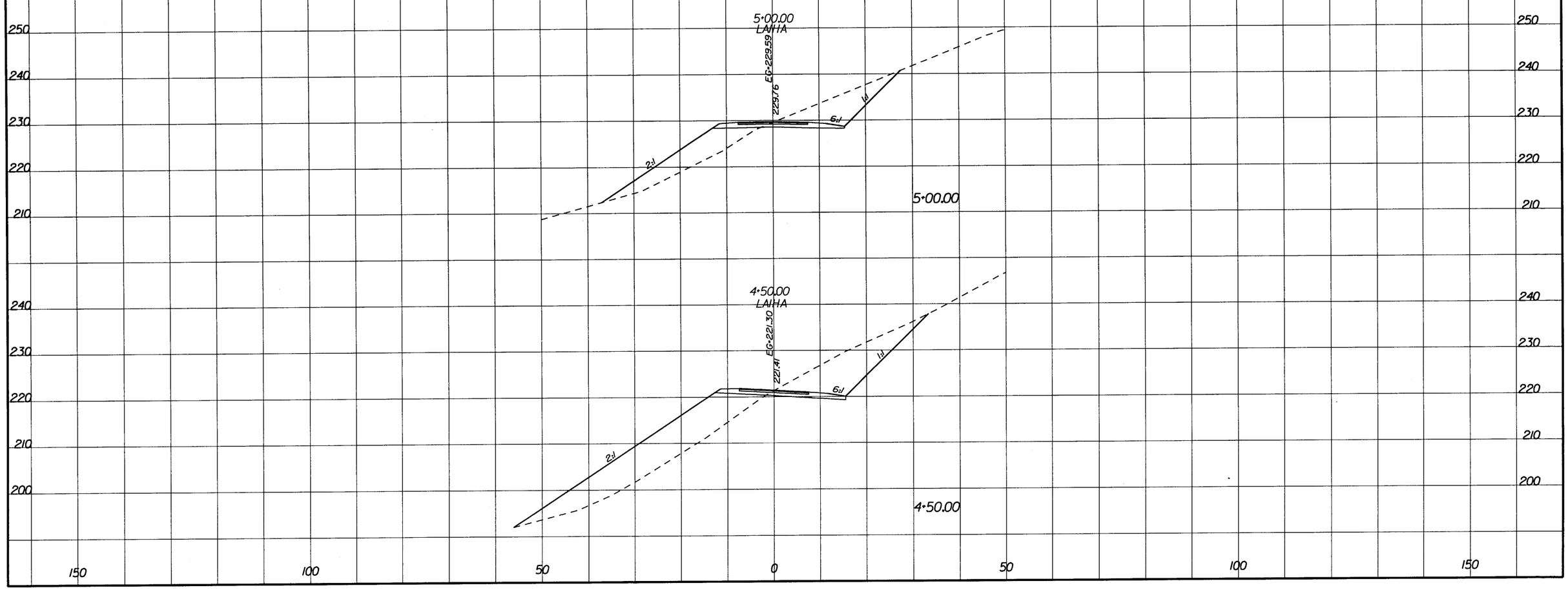

U.S. DEPARTMENT OF TRANSPORTATION
FEDERAL HIGHWAY ADMINISTRATION
EASTERN FEDERAL LANDS HIGHWAY DIVISION
STERLING, VIRGINIA

LINE 20
DESIGN CROSS SECTION

REG	STATE	PROJECT	SHEET NO.	TOTAL SHEETS
SE	VI	NH-66(008)	N41	193

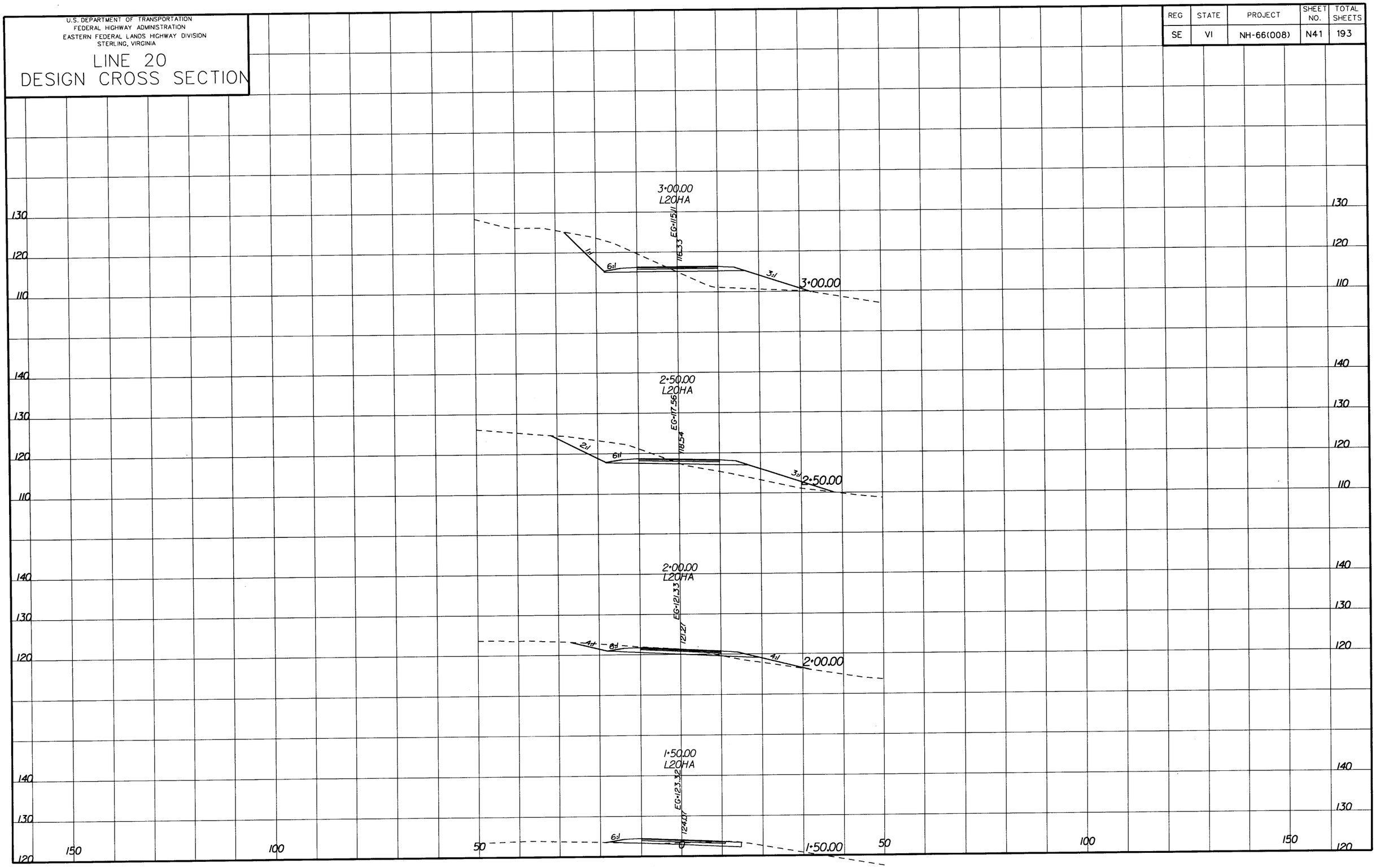

U.S. DEPARTMENT OF TRANSPORTATION
FEDERAL HIGHWAY ADMINISTRATION
EASTERN FEDERAL LANDS HIGHWAY DIVISION
STERLING, VIRGINIA

LINE 20
DESIGN CROSS SECTION

REG	STATE	PROJECT	SHEET NO.	TOTAL SHEETS
SE	VI	NH-66(008)	N42	193

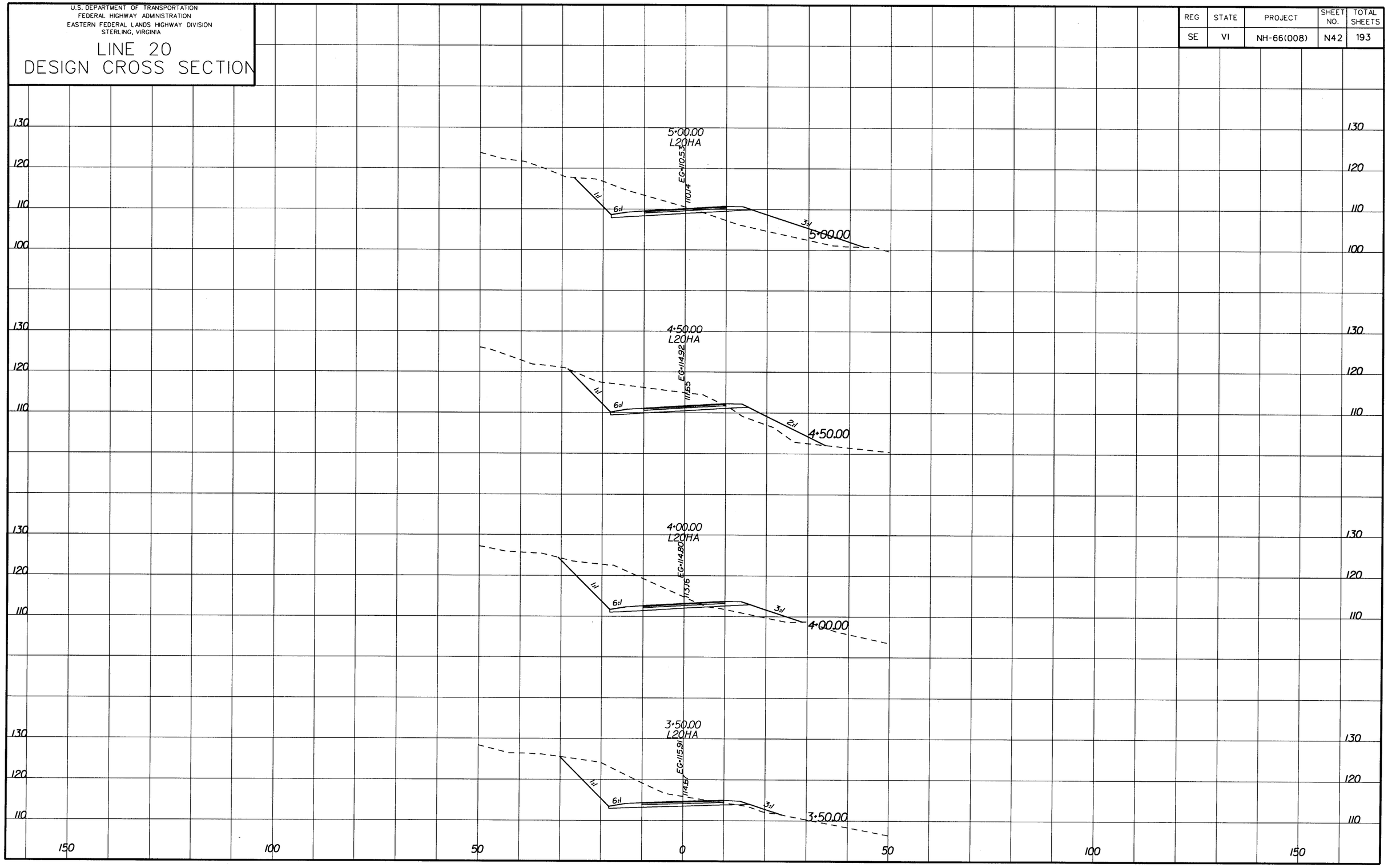

U.S. DEPARTMENT OF TRANSPORTATION
FEDERAL HIGHWAY ADMINISTRATION
EASTERN FEDERAL LANDS HIGHWAY DIVISION
STERLING, VIRGINIA

LINE 20
DESIGN CROSS SECTION

REG	STATE	PROJECT	SHEET NO.	TOTAL SHEETS
SE	VI	NH-66(008)	N43	193

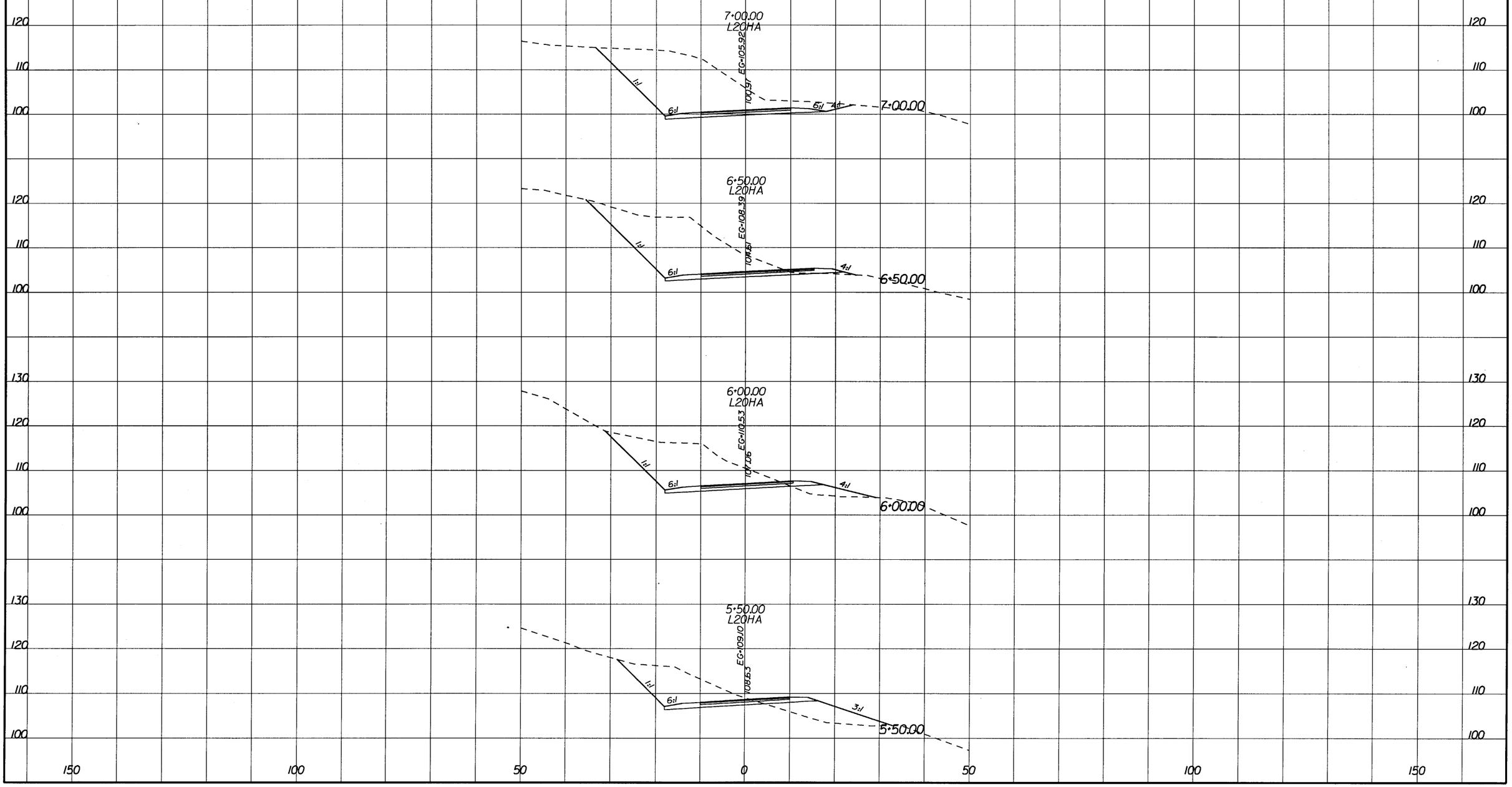

U.S. DEPARTMENT OF TRANSPORTATION
FEDERAL HIGHWAY ADMINISTRATION
EASTERN FEDERAL LANDS HIGHWAY DIVISION
STERLING, VIRGINIA

LINE 20
DESIGN CROSS SECTION
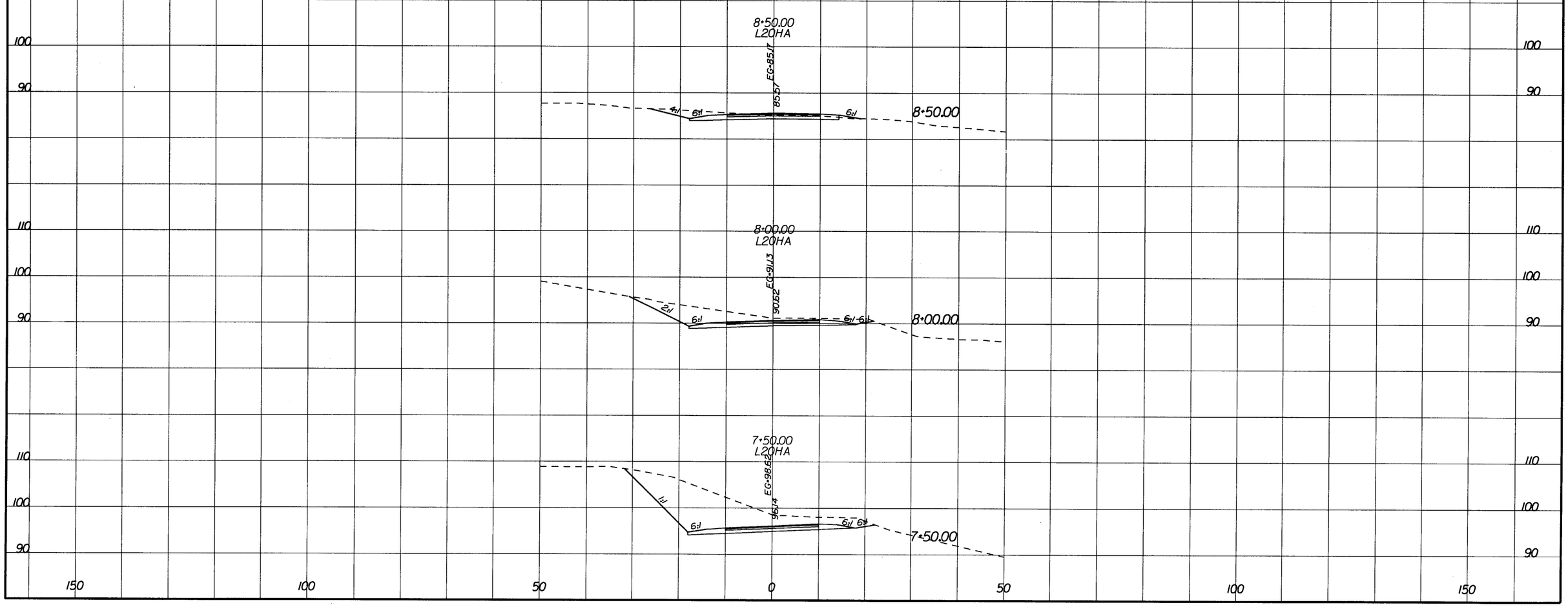
REG	STATE	PROJECT	SHEET NO.	TOTAL SHEETS
SE	VI	NH-66(008)	N44	193