04/02/09

I = 1400 A x 24 / 30 = 1120 A
S = 300 sq. mm (copper)
s = 31.6 sq. mm (water)

PANCAKE #1: 7 x 2 = 14 turns
L = 48 m
Two water circuits per pancake
V = 1.95 m/s
Q = 0.125 L/s = 2 GPM
R = 0.0029 Ohms
P = 3.65 kW
Delta T = 7 C

PANCAKE #2: 8 x 2 = 16 turns
L = 54 m
Two water circuits per pancake
V = 1.86 m/s
Q = 0.117 L/s = 1.86 GPM
R = 0.00324 Ohms
P = 4.064 kW
Delta T = 8.5 C

TOTAL MAGNET WINDING RESISTANCE = .0122 Ohms
TOTAL POWER LOSSES = 15.43 kW/MAGNET
TOTAL WATER FLOW = 7.75 GPM/MAGNET

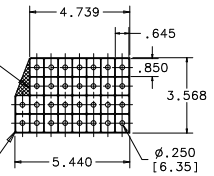

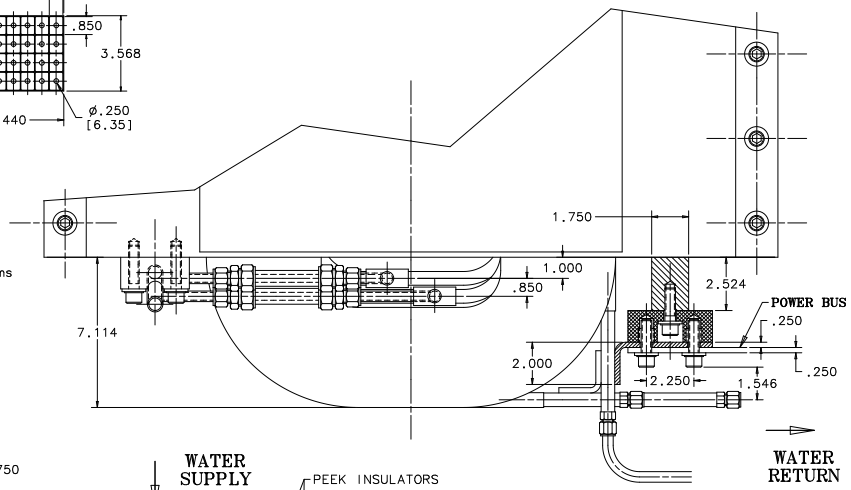

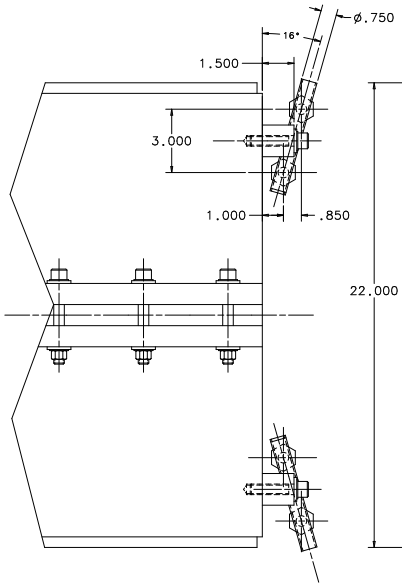

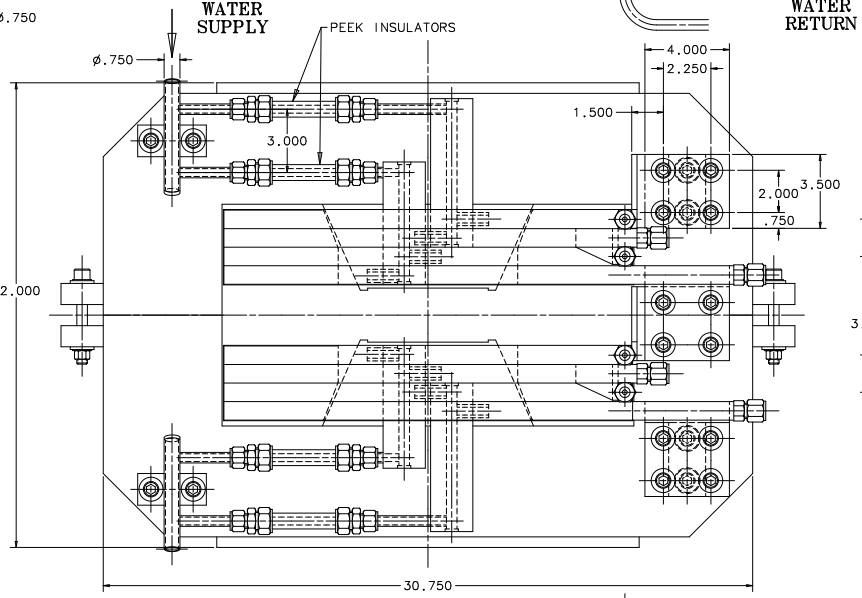

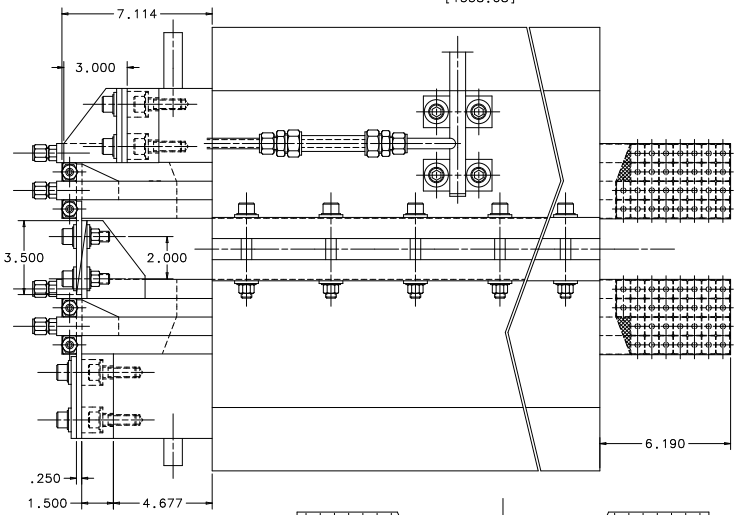

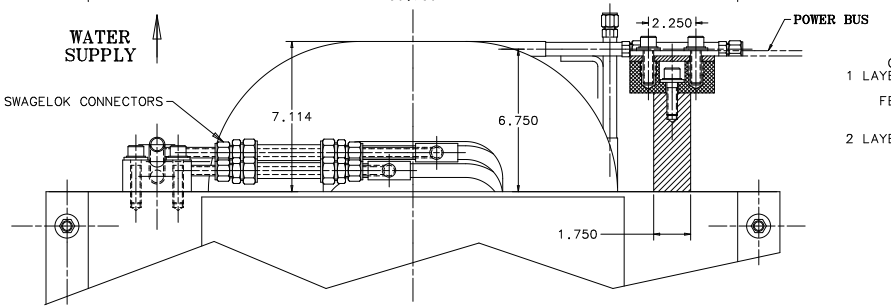

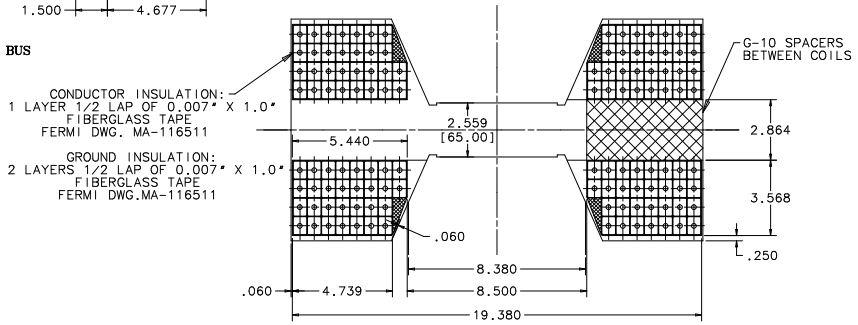

PANCAKE #1
7 TURNS PER LAYER

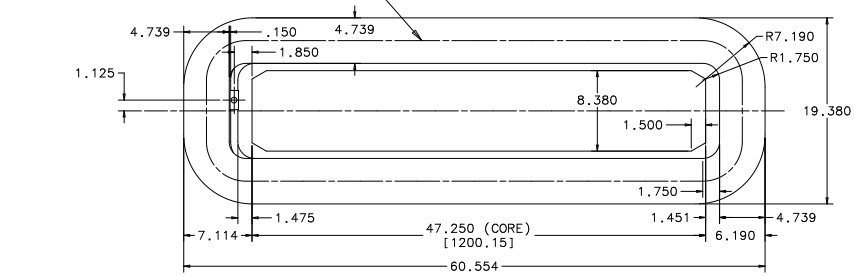
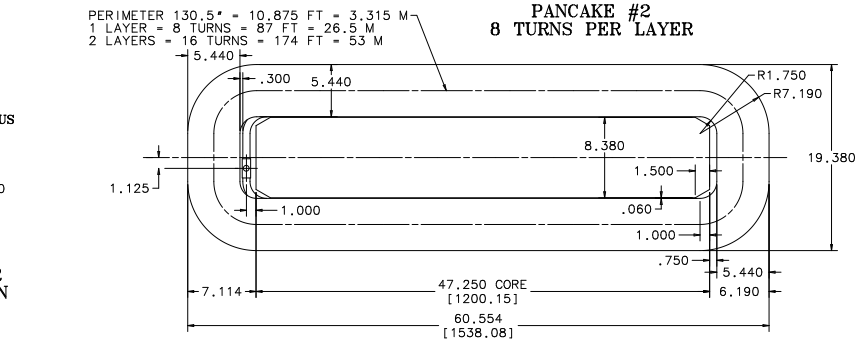
PANCAKE #2
8 TURNS PER LAYER