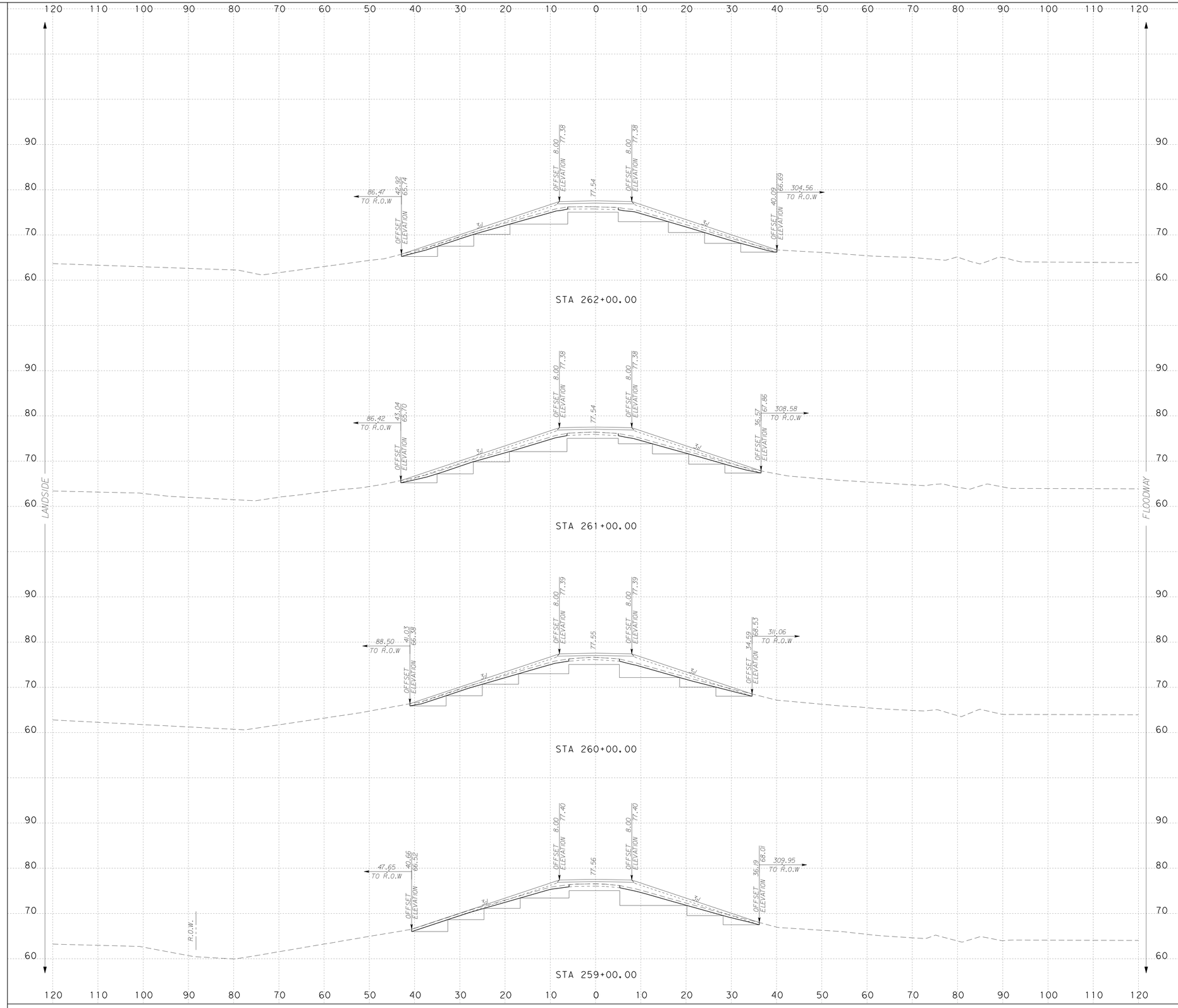

NOTES:

SURFACE DRAINAGE SHALL BE ESTABLISHED BY THE CONTRACTOR PRIOR TO AND DURING CONSTRUCTION TO PREVENT WATER FROM PONDING WITHIN OR ADJACENT TO THE LEVEE STRUCTURE.

IT IS INTENDED THAT THE FINAL SECTION OF THE PROPOSED LEVEE SHALL FACILITATE RAPID DRAINAGE AWAY FROM THE LEVEE STRUCTURE.

SCALE: H : 1"=10'
V : 1"=10'

INTERNATIONAL BOUNDARY AND WATER COMMISSION
COMISION INTERNACIONAL DE LIMITES Y AGUAS

S&B INFRASTRUCTURE, LTD.
Engineering Management Technology

S&B Infrastructure, Ltd. Firm Registration Number: 1582

STATE OF TEXAS
PHILLIP J. PAWELEK
82739
REGISTERED PROFESSIONAL ENGINEER

The seal appearing on this document was authorized by PHILLIP J. PAWELEK P.E. 82739, on 6-11, 2009

Phillip J. Pawelek, P.E.

NORTH FLOODWAY NORTH (NFN1)
PROPOSED CROSS SECTIONS

SHEET 65 OF 112 SHEET

STATE	COUNTY	DRAWN BY: JL	CHECKED BY: JL	
TEXAS	HIDALGO	PROJECT NO. IBM09T0018		SHEET NO.
REHABILITATION OF NORTH FLOODWAY NORTH AND SOUTH LEVEES (FM 1015 - BASELINE RD.)				10.65

6:58:19 PM 6/10/2009

N:\Project\u0450\U0450515\8004\WorkingFiles\Dgn\0450NFN1sLVpxs02.dgn

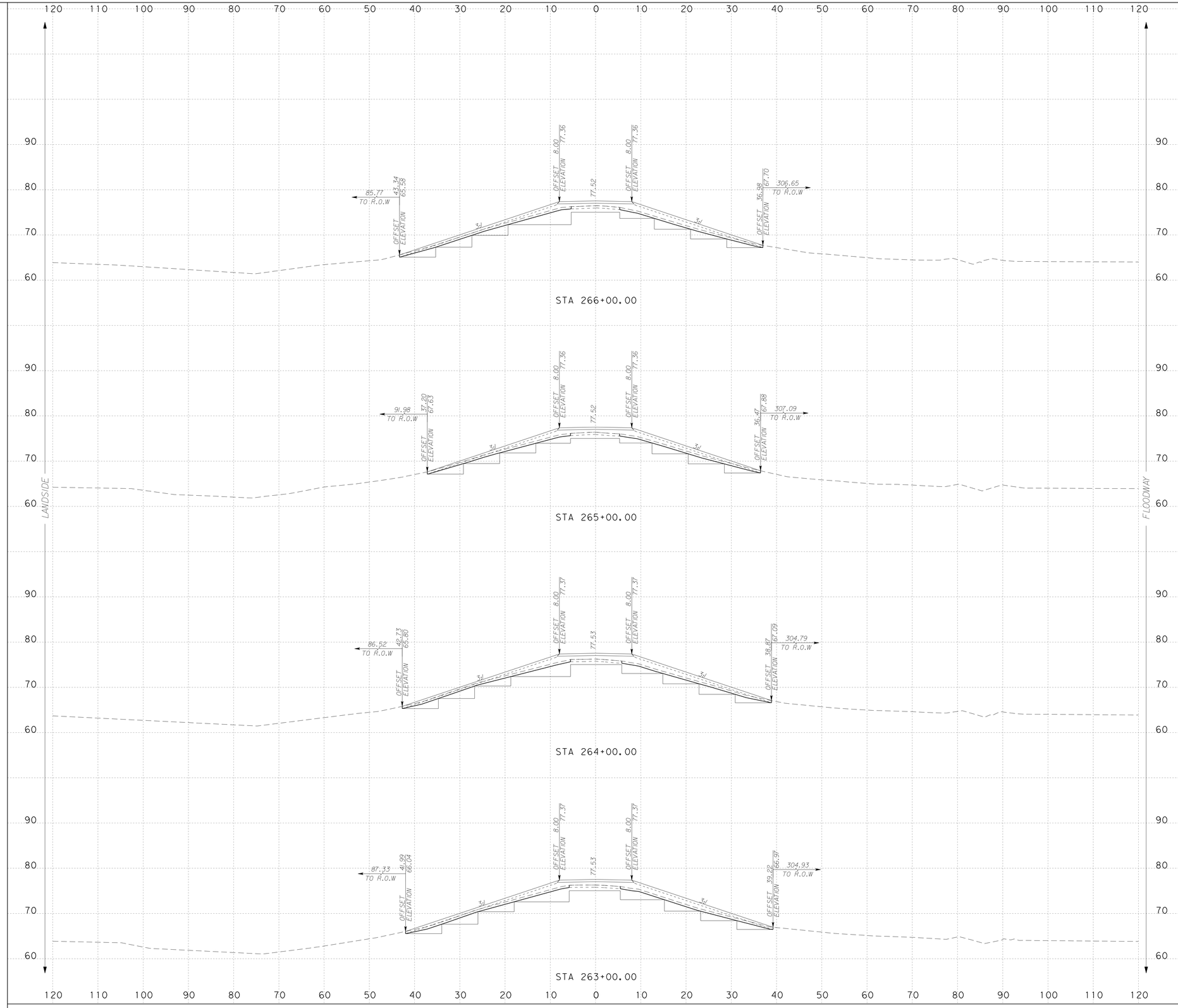

NOTES:

SURFACE DRAINAGE SHALL BE ESTABLISHED BY THE CONTRACTOR PRIOR TO AND DURING CONSTRUCTION TO PREVENT WATER FROM PONDING WITHIN OR ADJACENT TO THE LEVEE STRUCTURE.

IT IS INTENDED THAT THE FINAL SECTION OF THE PROPOSED LEVEE SHALL FACILITATE RAPID DRAINAGE AWAY FROM THE LEVEE STRUCTURE.

SCALE: H : 1"=10'
V : 1"=10'

INTERNATIONAL BOUNDARY AND WATER COMMISSION
COMISION INTERNACIONAL DE LIMITES Y AGUAS

S&B INFRASTRUCTURE, LTD.
Engineering Management Technology

S&B Infrastructure, Ltd. Firm Registration Number: 1582

STATE OF TEXAS
PHILLIP J. PAWELEK
82739
REGISTERED PROFESSIONAL ENGINEER

The seal appearing on this document was authorized by PHILLIP J. PAWELEK P.E. 82739, on 6-11, 2009.

Phillip J. Pawelek, P.E.

NORTH FLOODWAY NORTH (NFN1)
PROPOSED CROSS SECTIONS

SHEET 66 OF 112 SHEET

STATE	COUNTY	DRAWN BY: JL	CHECKED BY: JL	
TEXAS	HIDALGO	PROJECT NO. IBM09T0018		SHEET NO.
REHABILITATION OF NORTH FLOODWAY NORTH AND SOUTH LEVEES (FM 1015 - BASELINE RD.)				10.66

6:58:22 PM 6/10/2009

N:\Project\U0450\U0450515\800\WorkingFiles\Dgn\0450NFN1sLVpxs02.dgn

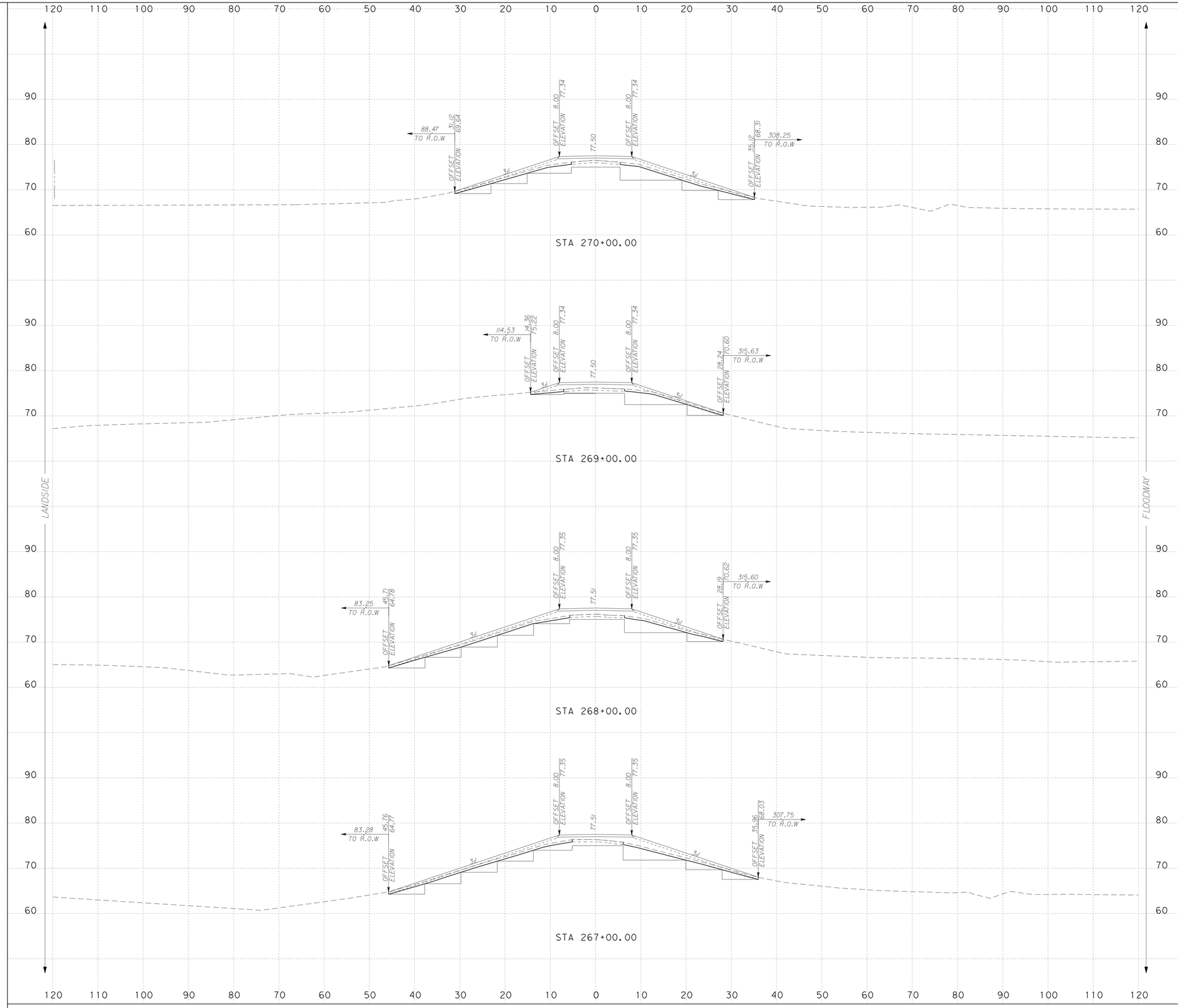

...\Dgn\0450NFN1sLVpxs02.dgn

NOTES:

SURFACE DRAINAGE SHALL BE ESTABLISHED BY THE CONTRACTOR PRIOR TO AND DURING CONSTRUCTION TO PREVENT WATER FROM PONDING WITHIN OR ADJACENT TO THE LEVEE STRUCTURE.

IT IS INTENDED THAT THE FINAL SECTION OF THE PROPOSED LEVEE SHALL FACILITATE RAPID DRAINAGE AWAY FROM THE LEVEE STRUCTURE.

SCALE: H : 1"=10'
V : 1"=10'

S&B INFRASTRUCTURE, LTD.
Engineering Management Technology

S&B Infrastructure, Ltd. Firm Registration Number: 1582

STATE OF TEXAS
PHILLIP J. PAWELEK
82739
REGISTERED PROFESSIONAL ENGINEER

The seal appearing on this document was authorized by PHILLIP J. PAWELEK P.E. 82739, on 6-11, 2009

Phillip J. Pawelek, P.E.

NORTH FLOODWAY NORTH (NFN1)
PROPOSED CROSS SECTIONS

SHEET 67 OF 112 SHEET

STATE	COUNTY	DRAWN BY: JL	CHECKED BY: JL	
TEXAS	HIDALGO	PROJECT NO. IBM09T0018		SHEET NO.
REHABILITATION OF NORTH FLOODWAY NORTH AND SOUTH LEVEES (FM 1015 - BASELINE RD.)				10.67

6:58:25 PM
6/10/2009
N:\Project\u0450\U0450515\800*WorkingFiles\Dgn\0450NFN1sLVpxs02.dgn

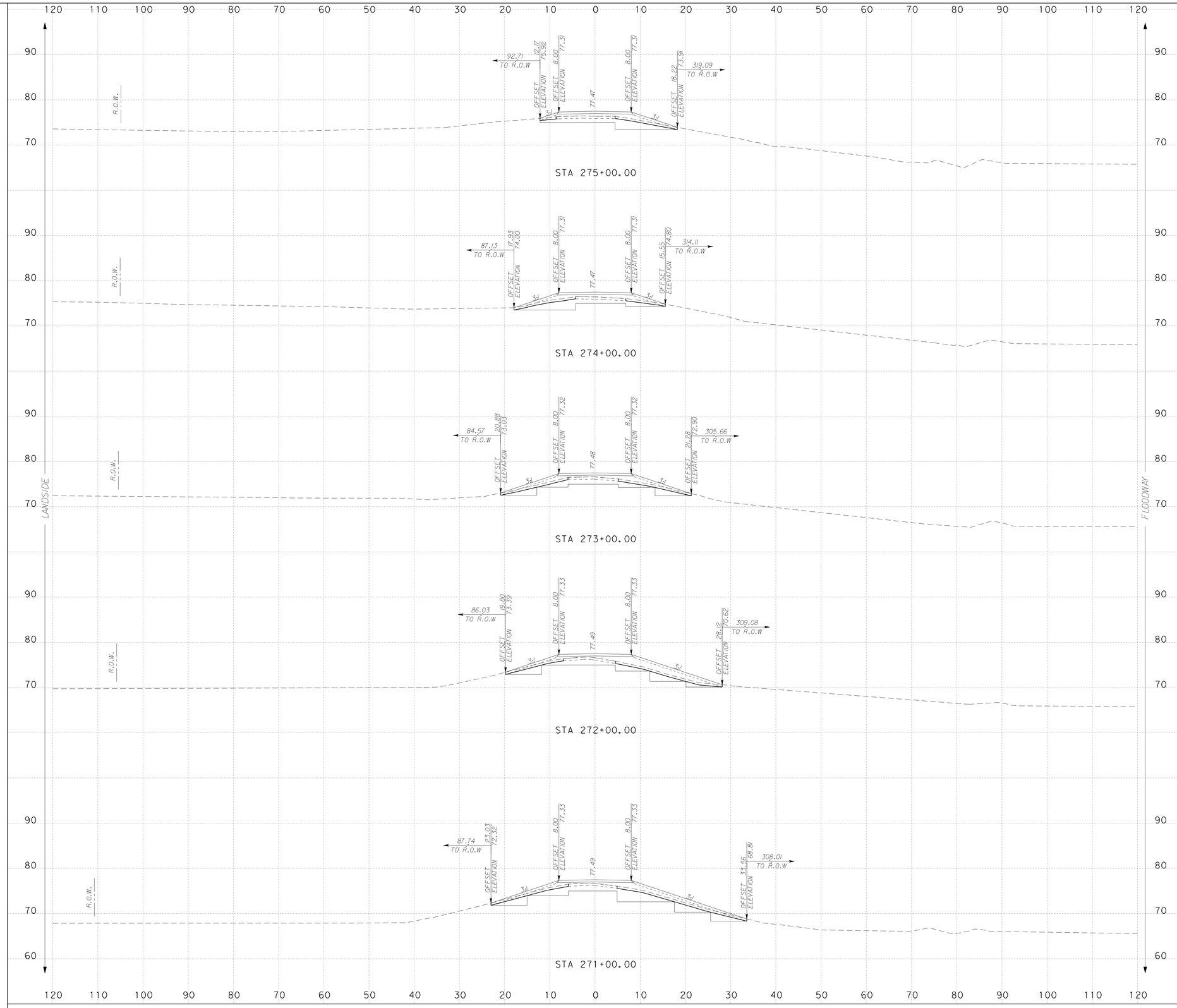

NOTES:

SURFACE DRAINAGE SHALL BE ESTABLISHED BY THE CONTRACTOR PRIOR TO AND DURING CONSTRUCTION TO PREVENT WATER FROM PONDING WITHIN OR ADJACENT TO THE LEVEE STRUCTURE.

IT IS INTENDED THAT THE FINAL SECTION OF THE PROPOSED LEVEE SHALL FACILITATE RAPID DRAINAGE AWAY FROM THE LEVEE STRUCTURE.

SCALE: H : 1"=10'
V : 1"=10'

S&B INFRASTRUCTURE, LTD.
Engineering Management Technology

S&B Infrastructure, Ltd. Firm Registration Number: 1582

STATE OF TEXAS
PHILLIP J. PAWELEK
82739
REGISTERED PROFESSIONAL ENGINEER

The seal appearing on this document was authorized by PHILLIP J. PAWELEK P.E. 82739, on 6-11, 2009.

Phillip J. Pawelek, P.E.

NORTH FLOODWAY NORTH (NFN1) PROPOSED CROSS SECTIONS

SHEET 68 OF 112 SHEET

STATE	COUNTY	DRAWN BY: JL	CHECKED BY: JL	
TEXAS	HIDALGO	PROJECT NO. IBM09T0018		SHEET NO.
REHABILITATION OF NORTH FLOODWAY NORTH AND SOUTH LEVEES (FM 1015 - BASELINE RD.)				10.68

6:58:28 PM 6/10/2009 N:\Project\0450\0450515\800\WorkingFiles\Dgn\0450NFN1sLVpxs02.dgn

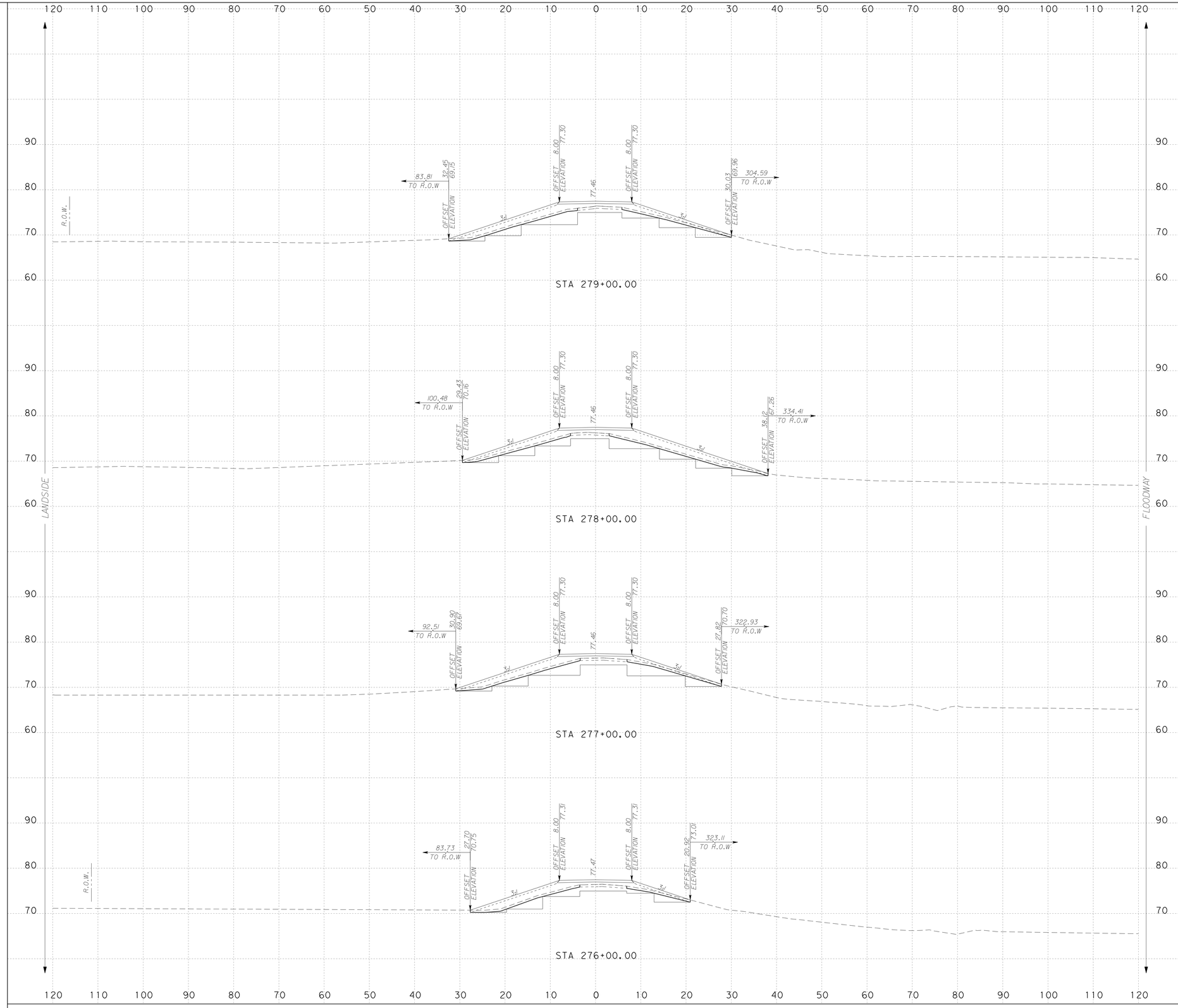

NOTES:

SURFACE DRAINAGE SHALL BE ESTABLISHED BY THE CONTRACTOR PRIOR TO AND DURING CONSTRUCTION TO PREVENT WATER FROM PONDING WITHIN OR ADJACENT TO THE LEVEE STRUCTURE.

IT IS INTENDED THAT THE FINAL SECTION OF THE PROPOSED LEVEE SHALL FACILITATE RAPID DRAINAGE AWAY FROM THE LEVEE STRUCTURE.

SCALE: H : 1"=10'
V : 1"=10'

S&B INFRASTRUCTURE, LTD.
Engineering Management Technology

S&B Infrastructure, Ltd. Firm Registration Number: 1582

STATE OF TEXAS
PHILLIP J. PAWELEK
82739
REGISTERED PROFESSIONAL ENGINEER

The seal appearing on this document was authorized by PHILLIP J. PAWELEK P.E. 82739, on 6-11, 2009.

Phillip J. Pawelek, P.E.

NORTH FLOODWAY NORTH (NFN1) PROPOSED CROSS SECTIONS

SHEET 69 OF 112 SHEET

STATE	COUNTY	DRAWN BY: JL	CHECKED BY: JL	
TEXAS	HIDALGO	PROJECT NO. IBM09T0018		SHEET NO.
REHABILITATION OF NORTH FLOODWAY NORTH AND SOUTH LEVEES (FM 1015 - BASELINE RD.)				10.69

6:58:31 PM 6/10/2009 N:\Project\u0450\U045051S\800\WorkingFiles\Dgn\0450NFN1sLVpxs02.dgn

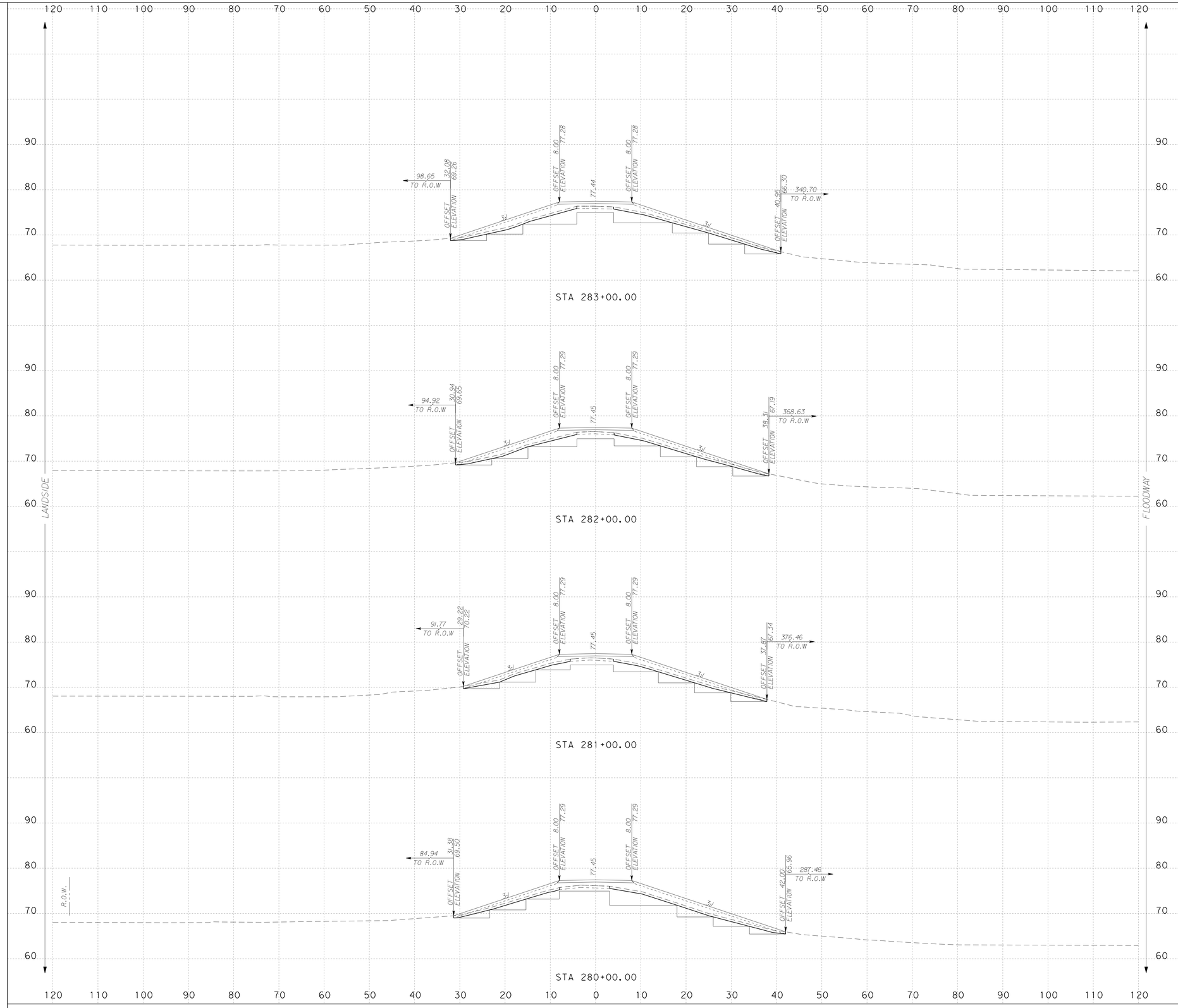

NOTES:

SURFACE DRAINAGE SHALL BE ESTABLISHED BY THE CONTRACTOR PRIOR TO AND DURING CONSTRUCTION TO PREVENT WATER FROM PONDING WITHIN OR ADJACENT TO THE LEVEE STRUCTURE.

IT IS INTENDED THAT THE FINAL SECTION OF THE PROPOSED LEVEE SHALL FACILITATE RAPID DRAINAGE AWAY FROM THE LEVEE STRUCTURE.

SCALE: H : 1"=10'
V : 1"=10'

S&B INFRASTRUCTURE, LTD.
Engineering Management Technology
S&B Infrastructure, Ltd. Firm Registration Number: 1582

STATE OF TEXAS
PHILLIP J. PAWELEK
82739
REGISTERED PROFESSIONAL ENGINEER

The seal appearing on this document was authorized by PHILLIP J. PAWELEK P.E. 82739, on 6-11, 2009

Phillip J. Pawelek, P.E.

NORTH FLOODWAY NORTH (NFN1) PROPOSED CROSS SECTIONS

SHEET 70 OF 112 SHEET

STATE	COUNTY	DRAWN BY: JL	CHECKED BY: JL	
TEXAS	HIDALGO	PROJECT NO. IBM09T0018		SHEET NO.
REHABILITATION OF NORTH FLOODWAY NORTH AND SOUTH LEVEES (FM 1015 - BASELINE RD.)				10.70

6:58:34 PM
6/10/2009
N:\Project\u0450\U045015\800\WorkingFiles\Dgn\0450NFN1sLVpxs02.dgn

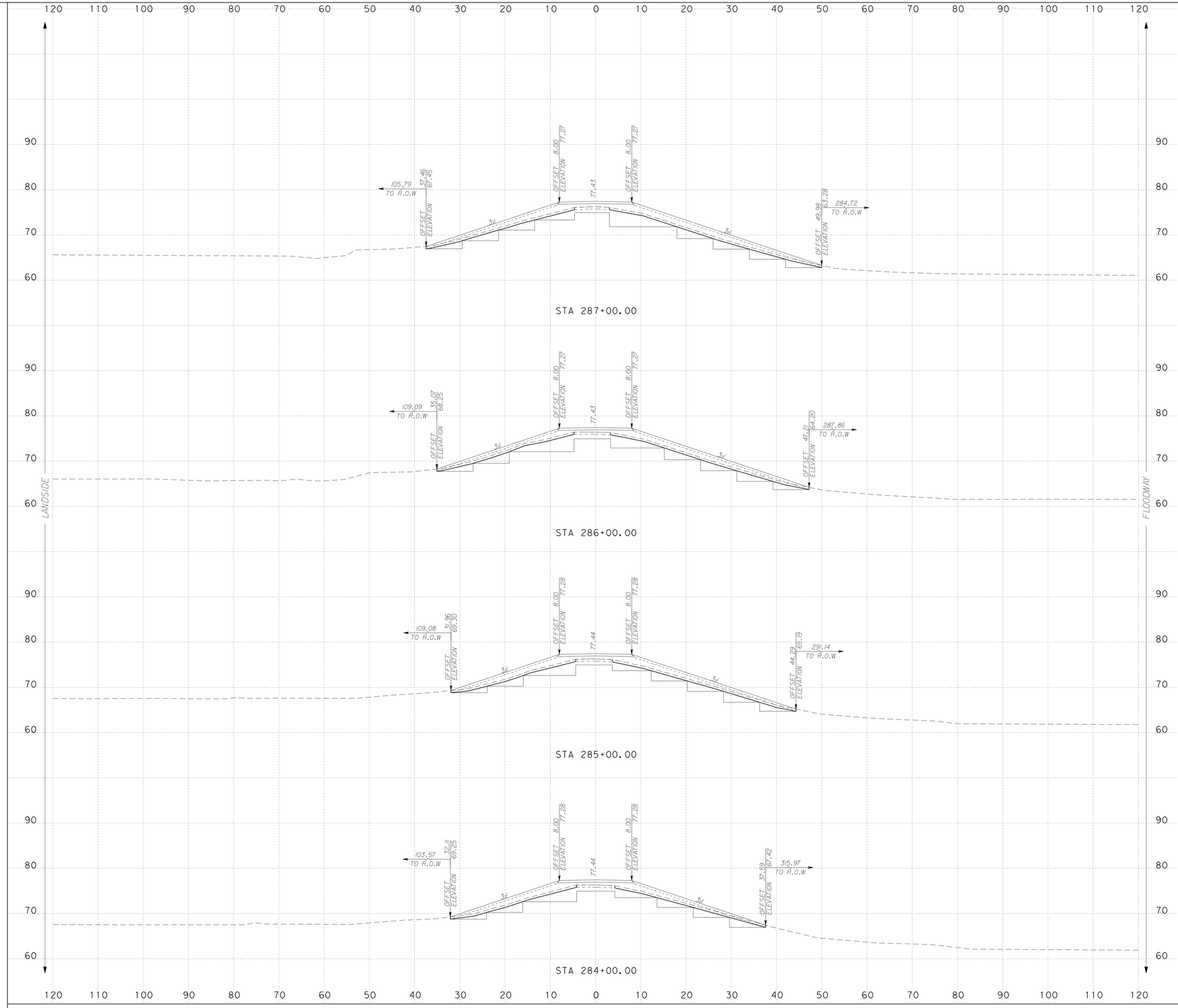

...\Dgn\0450NFN1sLVpxs02.dgn

NOTES:

SURFACE DRAINAGE SHALL BE ESTABLISHED BY THE CONTRACTOR PRIOR TO AND DURING CONSTRUCTION TO PREVENT WATER FROM PONDING WITHIN OR ADJACENT TO THE LEVEE STRUCTURE.

IT IS INTENDED THAT THE FINAL SECTION OF THE PROPOSED LEVEE SHALL FACILITATE RAPID DRAINAGE AWAY FROM THE LEVEE STRUCTURE.

SCALE: H : 1"=10'
V : 1"=10'

S&B INFRASTRUCTURE, LTD.
Engineering Management Technology

S&B Infrastructure, Ltd. Firm Registration Number: 1582

STATE OF TEXAS
PHILLIP J. PAWELEK
82739
REGISTERED PROFESSIONAL ENGINEER

The seal appearing on this document was authorized by PHILLIP J. PAWELEK P.E. 82739, on 6-11, 2009.

Phillip J. Pawelek, P.E.

NORTH FLOODWAY NORTH (NFN1)
PROPOSED CROSS SECTIONS

SHEET 71 OF 112 SHEET

STATE	COUNTY	DRAWN BY: JL	CHECKED BY: JL	
TEXAS	HIDALGO	PROJECT NO. IBM09T0018		SHEET NO.
REHABILITATION OF NORTH FLOODWAY NORTH AND SOUTH LEVEES (FM 1015 - BASELINE RD.)				10.71

6:58:37 PM
6/10/2009
N:\Project\u0450\U0450515\800*WorkingFiles\Dgn\0450NFN1sLVpxs02.dgn

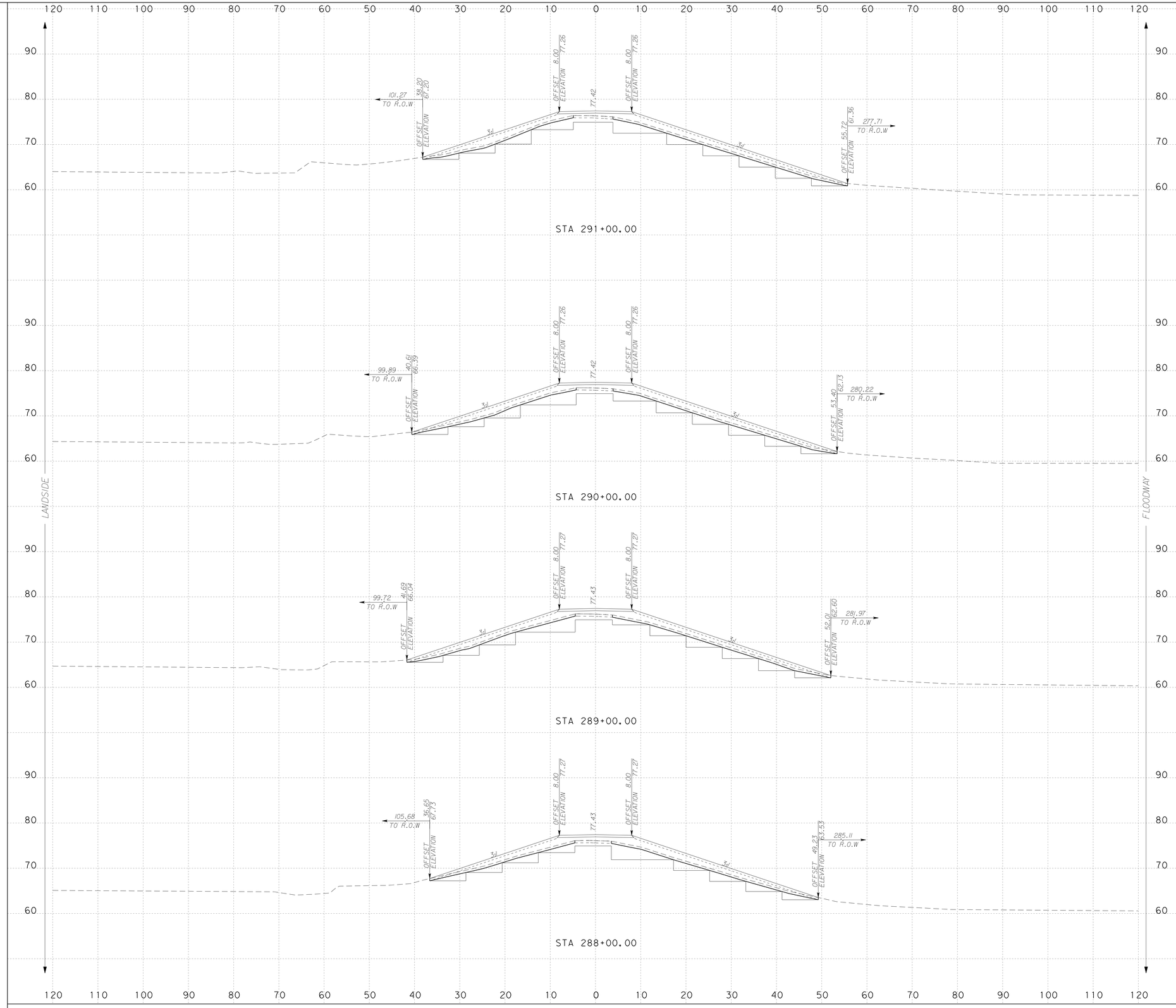

NOTES:

SURFACE DRAINAGE SHALL BE ESTABLISHED BY THE CONTRACTOR PRIOR TO AND DURING CONSTRUCTION TO PREVENT WATER FROM PONDING WITHIN OR ADJACENT TO THE LEVEE STRUCTURE.

IT IS INTENDED THAT THE FINAL SECTION OF THE PROPOSED LEVEE SHALL FACILITATE RAPID DRAINAGE AWAY FROM THE LEVEE STRUCTURE.

SCALE: H : 1"=10'
V : 1"=10'

INTERNATIONAL BOUNDARY AND WATER COMMISSION
COMISION INTERNACIONAL DE LIMITES Y AGUAS

S&B INFRASTRUCTURE, LTD.
Engineering Management Technology

S&B Infrastructure, Ltd. Firm Registration Number: 1582

STATE OF TEXAS
PHILLIP J. PAWELEK
82739
REGISTERED PROFESSIONAL ENGINEER

The seal appearing on this document was authorized by PHILLIP J. PAWELEK P.E. 82739, on 6-11, 2009

Phillip J. Pawelek, P.E.

NORTH FLOODWAY NORTH (NFN1)
PROPOSED CROSS SECTIONS

SHEET 72 OF 112 SHEET

STATE	COUNTY	DRAWN BY: JL	CHECKED BY: JL	
TEXAS	HIDALGO	PROJECT NO. IBM09T0018		SHEET NO.
REHABILITATION OF NORTH FLOODWAY NORTH AND SOUTH LEVEES (FM 1015 - BASELINE RD.)				10.72

6:58:40 PM
6/10/2009
N:\Project\u0450\U045051\800\WorkingFiles\Dgn\0450NFN1sLVpxs02.dgn

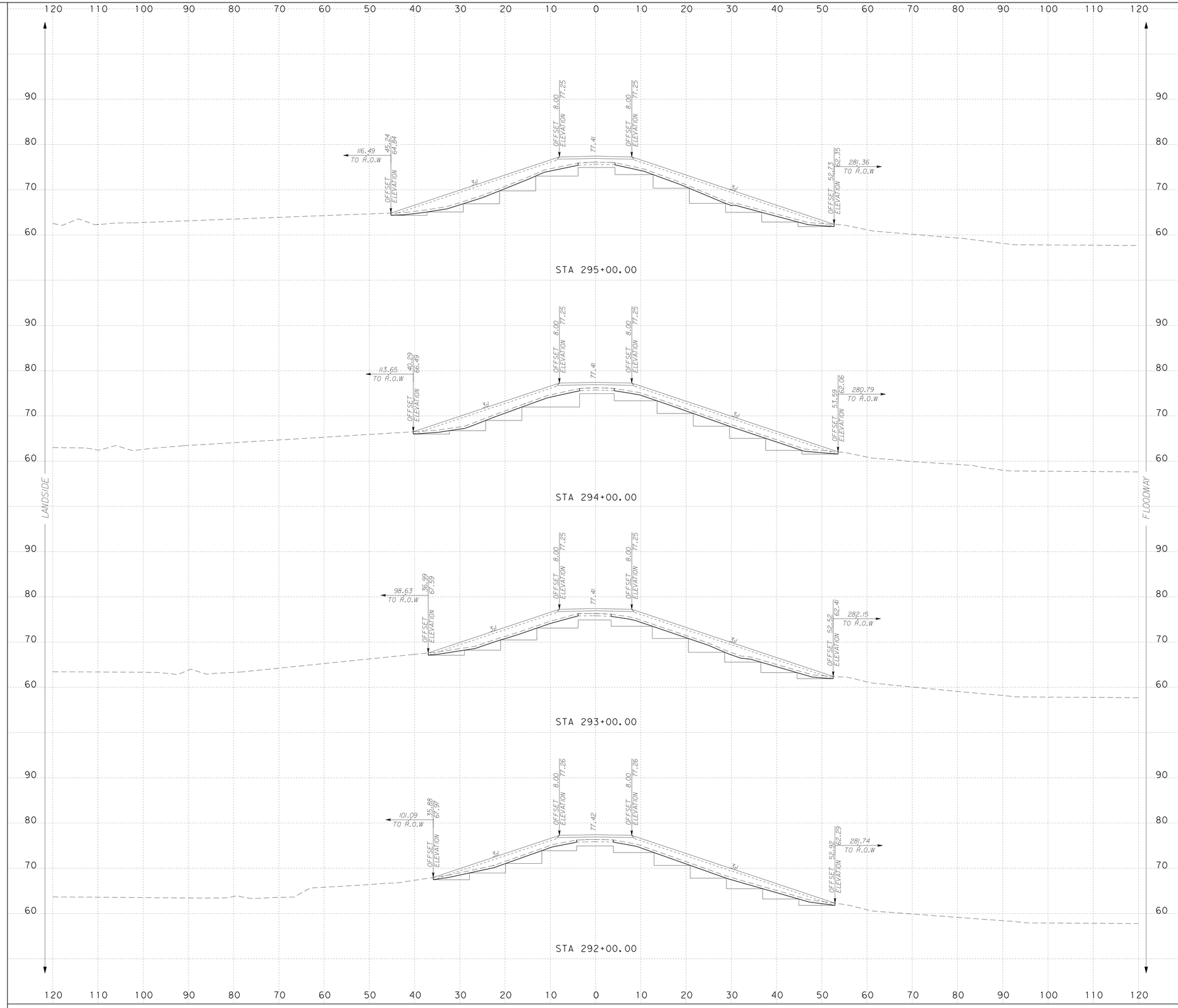

NOTES:

SURFACE DRAINAGE SHALL BE ESTABLISHED BY THE CONTRACTOR PRIOR TO AND DURING CONSTRUCTION TO PREVENT WATER FROM PONDING WITHIN OR ADJACENT TO THE LEVEE STRUCTURE.

IT IS INTENDED THAT THE FINAL SECTION OF THE PROPOSED LEVEE SHALL FACILITATE RAPID DRAINAGE AWAY FROM THE LEVEE STRUCTURE.

SCALE: H : 1"=10'
V : 1"=10'

S&B INFRASTRUCTURE, LTD.
Engineering Management Technology

S&B Infrastructure, Ltd. Firm Registration Number: 1582

STATE OF TEXAS
PHILLIP J. PAWELEK
82739
REGISTERED PROFESSIONAL ENGINEER

The seal appearing on this document was authorized by PHILLIP J. PAWELEK P.E. 82739, on 6-11, 2009

Phillip J. Pawelek, P.E.

NORTH FLOODWAY NORTH (NFN1) PROPOSED CROSS SECTIONS

SHEET 73 OF 112 SHEET

STATE	COUNTY	DRAWN BY: JL	CHECKED BY: JL	
TEXAS	HIDALGO	PROJECT NO. IBM09T0018		SHEET NO.
REHABILITATION OF NORTH FLOODWAY NORTH AND SOUTH LEVEES (FM 1015 - BASELINE RD.)				10.73

6:58:43 PM 6/10/2009 N:\Project\u0450\U045051\800\WorkingFiles\Dgn\0450NFN1sLVpxs02.dgn

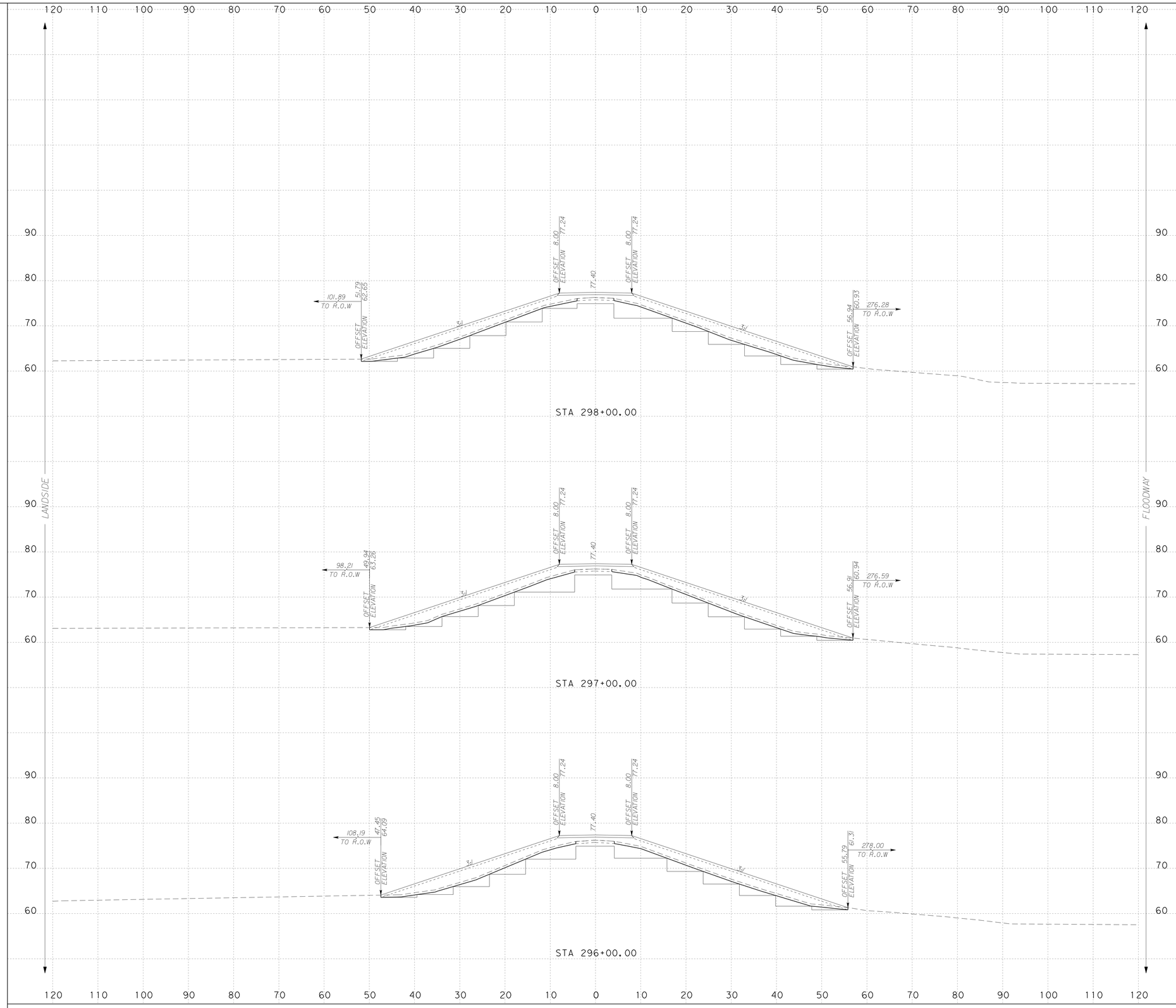

NOTES:

SURFACE DRAINAGE SHALL BE ESTABLISHED BY THE CONTRACTOR PRIOR TO AND DURING CONSTRUCTION TO PREVENT WATER FROM PONDING WITHIN OR ADJACENT TO THE LEVEE STRUCTURE.

IT IS INTENDED THAT THE FINAL SECTION OF THE PROPOSED LEVEE SHALL FACILITATE RAPID DRAINAGE AWAY FROM THE LEVEE STRUCTURE.

SCALE: H : 1"=10'
V : 1"=10'

S&B INFRASTRUCTURE, LTD.
Engineering Management Technology
S&B Infrastructure, Ltd. Firm Registration Number: 1582

STATE OF TEXAS
PHILLIP J. PAWELEK
82739
REGISTERED PROFESSIONAL ENGINEER

The seal appearing on this document was authorized by PHILLIP J. PAWELEK P.E. 82739, on 6-11, 2009

Phillip J. Pawelek, P.E.

NORTH FLOODWAY NORTH (NFN1)
PROPOSED CROSS SECTIONS

SHEET 74 OF 112 SHEET

STATE	COUNTY	DRAWN BY: JL	CHECKED BY: JL	
TEXAS	HIDALGO	PROJECT NO. IBM09T0018		SHEET NO.
REHABILITATION OF NORTH FLOODWAY NORTH AND SOUTH LEVEES (FM 1015 - BASELINE RD.)				10.74

6:58:46 PM
6/10/2009
N:\Project\u0450\U0450515\800*WorkingFiles\Dgn\0450NFN1sLVpxs02.dgn

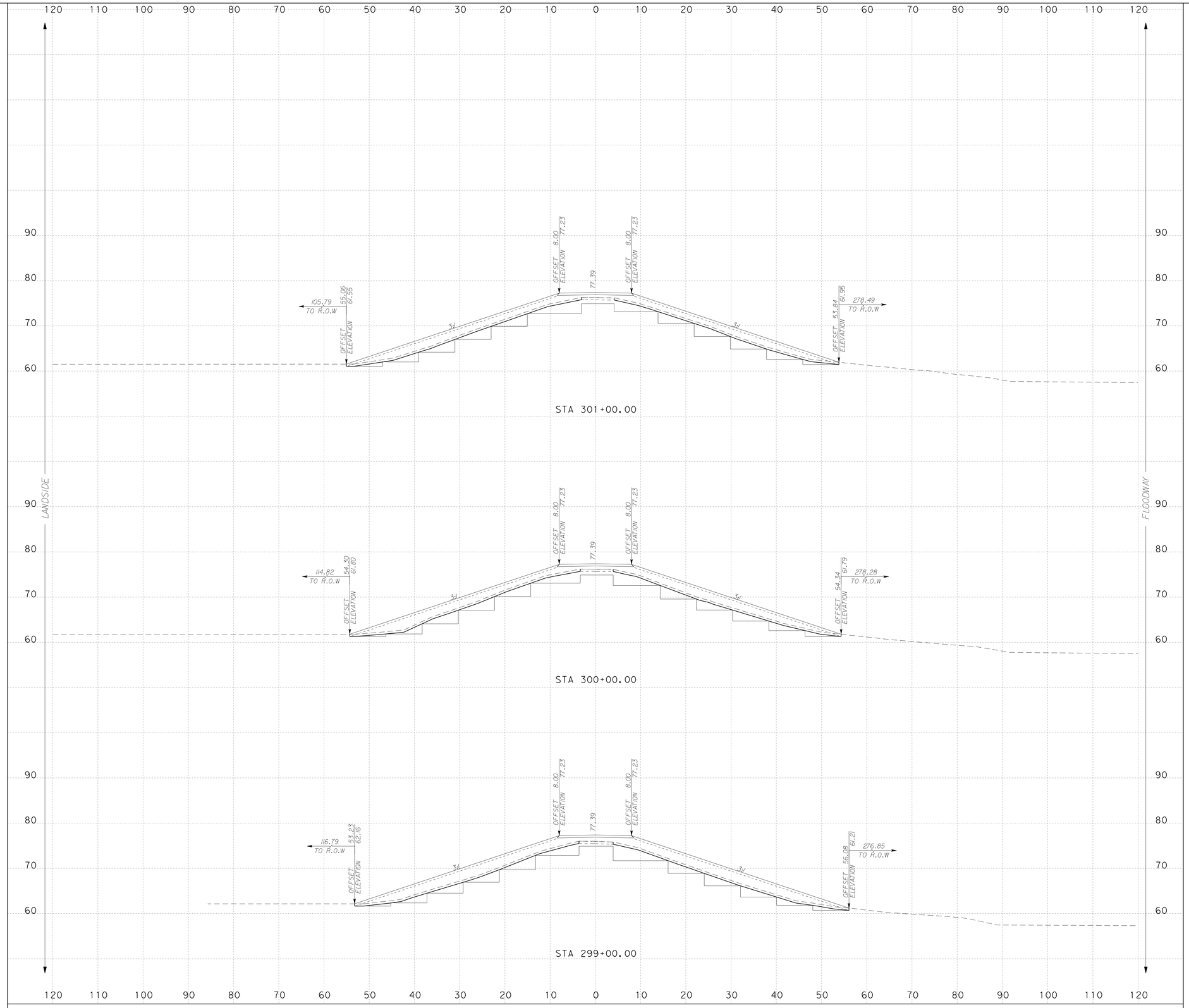

NOTES:

SURFACE DRAINAGE SHALL BE ESTABLISHED BY THE CONTRACTOR PRIOR TO AND DURING CONSTRUCTION TO PREVENT WATER FROM PONDING WITHIN OR ADJACENT TO THE LEVEE STRUCTURE.

IT IS INTENDED THAT THE FINAL SECTION OF THE PROPOSED LEVEE SHALL FACILITATE RAPID DRAINAGE AWAY FROM THE LEVEE STRUCTURE.

SCALE: H : 1"=10'
V : 1"=10'

INTERNATIONAL BOUNDARY AND WATER COMMISSION
COMISION INTERNACIONAL DE LIMITES Y AGUAS

S&B INFRASTRUCTURE, LTD.
Engineering Management Technology

S&B Infrastructure, Ltd. Firm Registration Number: 1582

STATE OF TEXAS
PHILLIP J. PAWELEK
82739
REGISTERED PROFESSIONAL ENGINEER

The seal appearing on this document was authorized by PHILLIP J. PAWELEK P.E. 82739, on 6-11, 2009.

Phillip J. Pawelek, P.E.

NORTH FLOODWAY NORTH (NFN1) PROPOSED CROSS SECTIONS

SHEET 75 OF 112 SHEET

STATE	COUNTY	DRAWN BY: JL	CHECKED BY: JL	
TEXAS	HIDALGO	PROJECT NO. IBM09T0018		SHEET NO.
REHABILITATION OF NORTH FLOODWAY NORTH AND SOUTH LEVEES (FM 1015 - BASELINE RD.)				10.75

N:\Project\u0450\U045015\800*WorkingFiles\Dgn\0450NFN1sLVpxs02.dgn
6/10/2009
6:58:48 PM

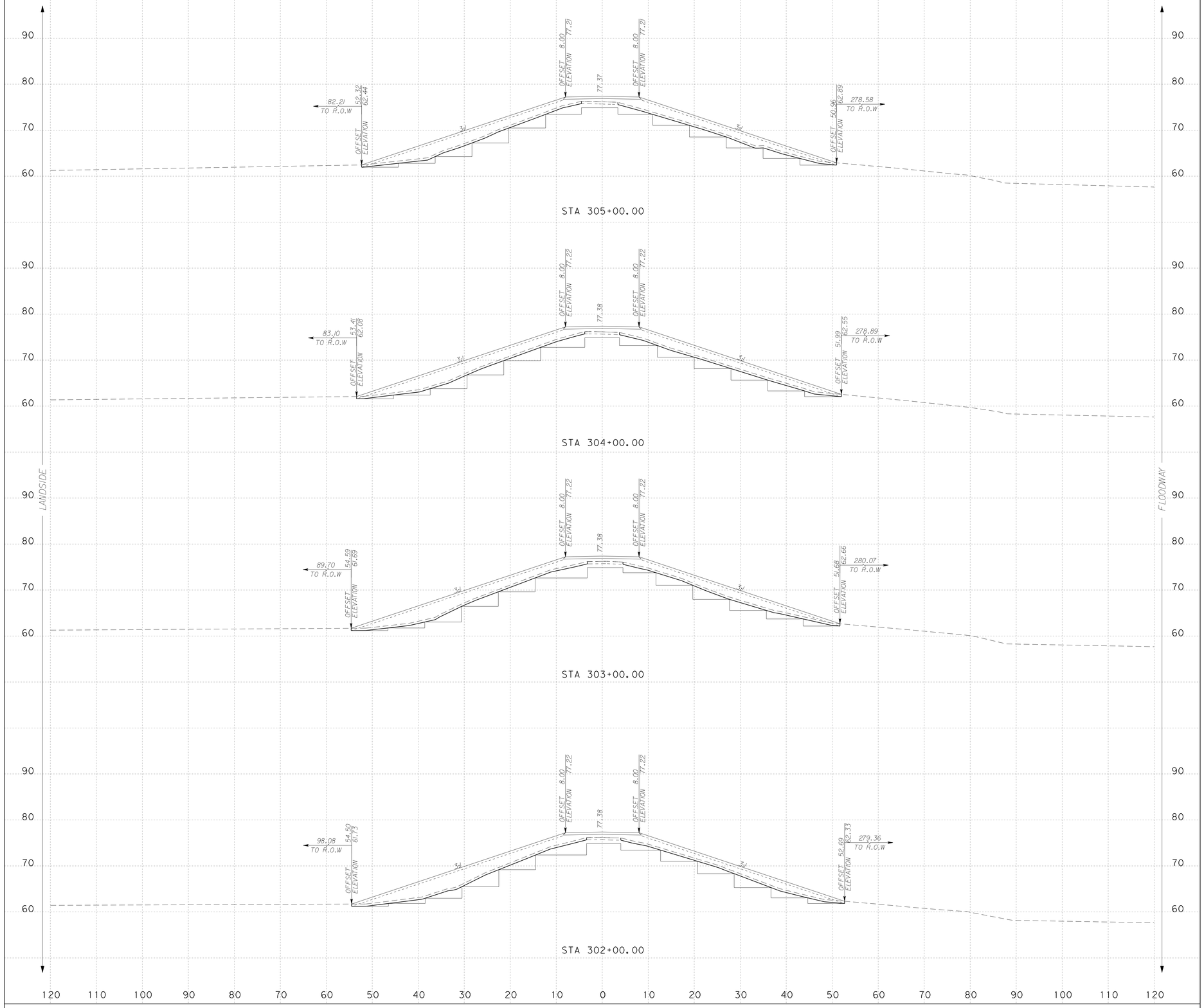

...\Dgn\0450NFN1sLVpxs02.dgn

NOTES:

SURFACE DRAINAGE SHALL BE ESTABLISHED BY THE CONTRACTOR PRIOR TO AND DURING CONSTRUCTION TO PREVENT WATER FROM PONDING WITHIN OR ADJACENT TO THE LEVEE STRUCTURE.

IT IS INTENDED THAT THE FINAL SECTION OF THE PROPOSED LEVEE SHALL FACILITATE RAPID DRAINAGE AWAY FROM THE LEVEE STRUCTURE.

SCALE: H : 1"=10'
V : 1"=10'

S&B INFRASTRUCTURE, LTD.
Engineering Management Technology
S&B Infrastructure, Ltd. Firm Registration Number: 1582

STATE OF TEXAS
PHILLIP J. PAWELEK
82739
REGISTERED PROFESSIONAL ENGINEER

The seal appearing on this document was authorized by PHILLIP J. PAWELEK P.E. 82739, on 6-11, 2009

Phillip J. Pawelek, P.E.

NORTH FLOODWAY NORTH (NFN1)
PROPOSED CROSS SECTIONS

SHEET 76 OF 112 SHEET

STATE	COUNTY	DRAWN BY: JL	CHECKED BY: JL	
TEXAS	HIDALGO	PROJECT NO. IBM09T0018		SHEET NO.
REHABILITATION OF NORTH FLOODWAY NORTH AND SOUTH LEVEES (FM 1015 - BASELINE RD.)				10.76

6:58:51 PM
6/10/2009
N:\Project\u0450\U0450515\800+WorkingFiles\Dgn\0450NFN1sLVpxs02.dgn

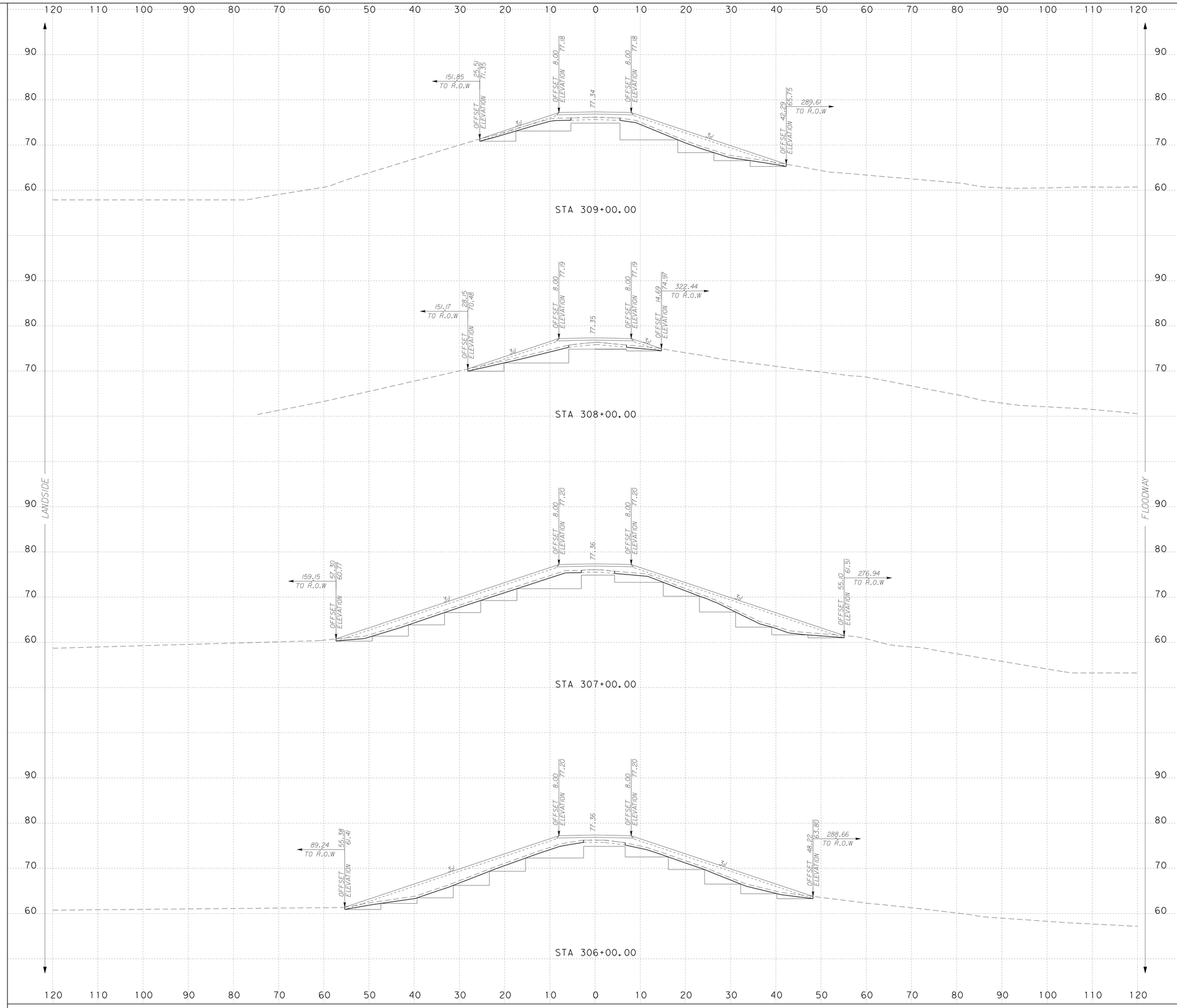

NOTES:

SURFACE DRAINAGE SHALL BE ESTABLISHED BY THE CONTRACTOR PRIOR TO AND DURING CONSTRUCTION TO PREVENT WATER FROM PONDING WITHIN OR ADJACENT TO THE LEVEE STRUCTURE.

IT IS INTENDED THAT THE FINAL SECTION OF THE PROPOSED LEVEE SHALL FACILITATE RAPID DRAINAGE AWAY FROM THE LEVEE STRUCTURE.

SCALE: H : 1"=10'
V : 1"=10'

INTERNATIONAL BOUNDARY AND WATER COMMISSION
COMISION INTERNACIONAL DE LIMITES Y AGUAS

S&B INFRASTRUCTURE, LTD.
Engineering Management Technology

S&B Infrastructure, Ltd. Firm Registration Number: 1582

STATE OF TEXAS
PHILLIP J. PAWELEK
82739
REGISTERED PROFESSIONAL ENGINEER

The seal appearing on this document was authorized by PHILLIP J. PAWELEK P.E. 82739, on 6-11, 2009.

Phillip J. Pawelek, P.E.

NORTH FLOODWAY NORTH (NFN1)
PROPOSED CROSS SECTIONS

SHEET 77 OF 112 SHEET

STATE	COUNTY	DRAWN BY: JL	CHECKED BY: JL	
TEXAS	HIDALGO	PROJECT NO. IBM09T0018		SHEET NO.
REHABILITATION OF NORTH FLOODWAY NORTH AND SOUTH LEVEES (FM 1015 - BASELINE RD.)				10.77

6/10/2009 6:58:54 PM

N:\Project\U0450\U045015\800*WorkingFiles\Dgn\0450NFN1sLVpxs02.dgn

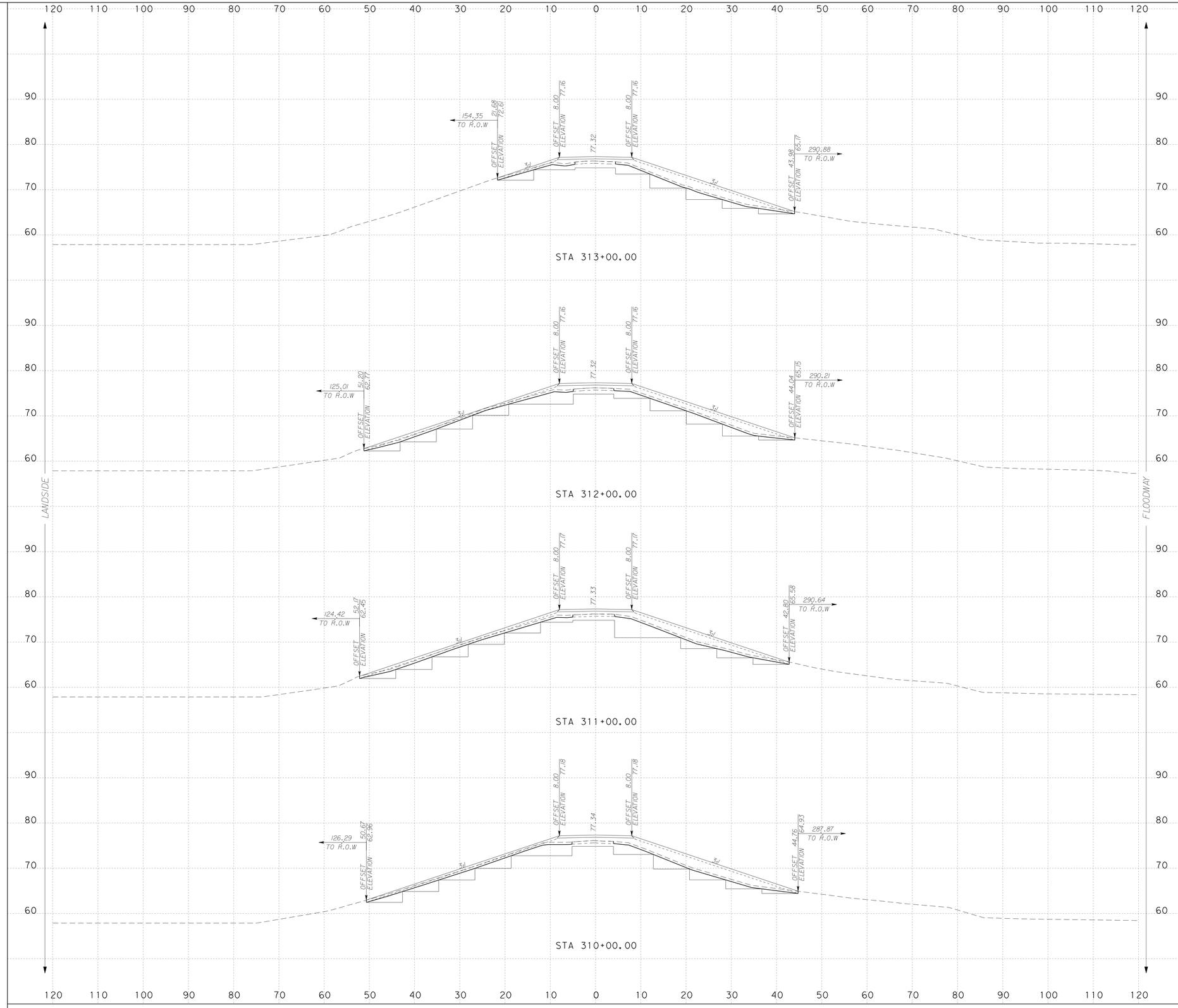

NOTES:

SURFACE DRAINAGE SHALL BE ESTABLISHED BY THE CONTRACTOR PRIOR TO AND DURING CONSTRUCTION TO PREVENT WATER FROM PONDING WITHIN OR ADJACENT TO THE LEVEE STRUCTURE.

IT IS INTENDED THAT THE FINAL SECTION OF THE PROPOSED LEVEE SHALL FACILITATE RAPID DRAINAGE AWAY FROM THE LEVEE STRUCTURE.

SCALE: H : 1"=10'
V : 1"=10'

S&B INFRASTRUCTURE, LTD.
Engineering Management Technology

S&B Infrastructure, Ltd. Firm Registration Number: 1582

STATE OF TEXAS
PHILLIP J. PAWELEK
82739
REGISTERED PROFESSIONAL ENGINEER

The seal appearing on this document was authorized by PHILLIP J. PAWELEK P.E. 82739, on 6-11, 2009

Phillip J. Pawelek, P.E.

NORTH FLOODWAY NORTH (NFN1) PROPOSED CROSS SECTIONS

SHEET 78 OF 112 SHEET

STATE	COUNTY	DRAWN BY: JL	CHECKED BY: JL	
TEXAS	HIDALGO	PROJECT NO. IBM09T0018		SHEET NO.
REHABILITATION OF NORTH FLOODWAY NORTH AND SOUTH LEVEES (FM 1015 - BASELINE RD.)				10.78

6:58:57 PM 6/10/2009

N:\Project\u0450\U045051S\800#WorkingFiles\Dgn\0450NFN1sLVpxs02.dgn

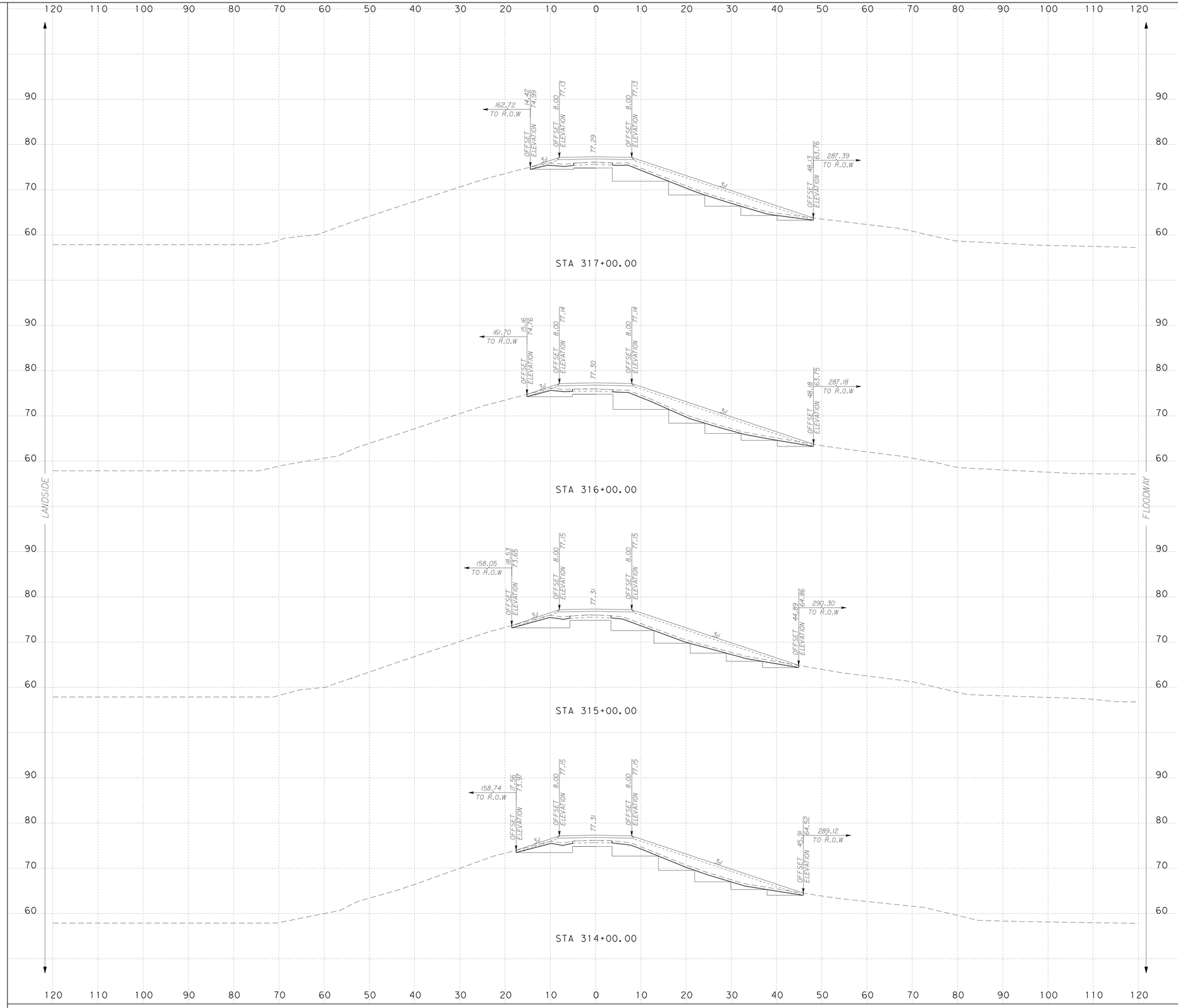

...\Dgn\0450NFN1sLVpxs02.dgn

NOTES:

SURFACE DRAINAGE SHALL BE ESTABLISHED BY THE CONTRACTOR PRIOR TO AND DURING CONSTRUCTION TO PREVENT WATER FROM PONDING WITHIN OR ADJACENT TO THE LEVEE STRUCTURE.

IT IS INTENDED THAT THE FINAL SECTION OF THE PROPOSED LEVEE SHALL FACILITATE RAPID DRAINAGE AWAY FROM THE LEVEE STRUCTURE.

SCALE: H : 1"=10'
V : 1"=10'

S&B INFRASTRUCTURE, LTD.
Engineering Management Technology

S&B Infrastructure, Ltd. Firm Registration Number: 1582

STATE OF TEXAS
PHILLIP J. PAWELEK
82739
REGISTERED PROFESSIONAL ENGINEER

The seal appearing on this document was authorized by PHILLIP J. PAWELEK P.E. 82739, on 6-11, 2009.

Phillip J. Pawelek, P.E.

NORTH FLOODWAY NORTH (NFN1)
PROPOSED CROSS SECTIONS

SHEET 79 OF 112 SHEET

STATE	COUNTY	DRAWN BY: JL	CHECKED BY: JL	
TEXAS	HIDALGO	PROJECT NO. IBM09T0018		SHEET NO.
REHABILITATION OF NORTH FLOODWAY NORTH AND SOUTH LEVEES (FM 1015 - BASELINE RD.)				10.79

6:59:00 PM
6/10/2009
N:\Project\u0450\U0450515\800*WorkingFiles\Dgn\0450NFN1sLVpxs02.dgn

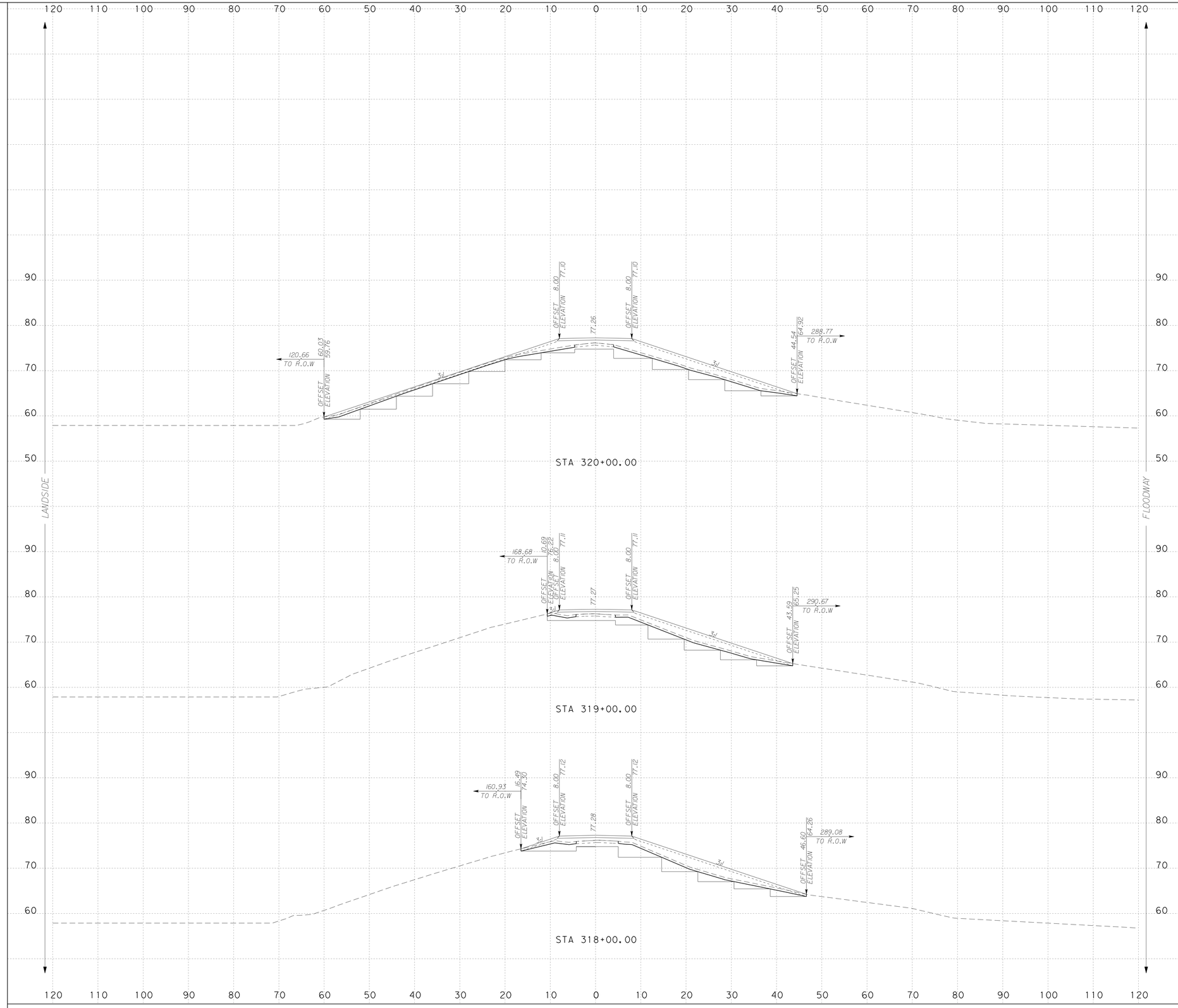

NOTES:

SURFACE DRAINAGE SHALL BE ESTABLISHED BY THE CONTRACTOR PRIOR TO AND DURING CONSTRUCTION TO PREVENT WATER FROM PONDING WITHIN OR ADJACENT TO THE LEVEE STRUCTURE.

IT IS INTENDED THAT THE FINAL SECTION OF THE PROPOSED LEVEE SHALL FACILITATE RAPID DRAINAGE AWAY FROM THE LEVEE STRUCTURE.

SCALE: H : 1"=10'
V : 1"=10'

S&B INFRASTRUCTURE, LTD.
Engineering Management Technology

S&B Infrastructure, Ltd. Firm Registration Number: 1582

STATE OF TEXAS
PHILLIP J. PAWELEK
82739
REGISTERED PROFESSIONAL ENGINEER

The seal appearing on this document was authorized by PHILLIP J. PAWELEK P.E. 82739, on 6-11, 2009.

Phillip J. Pawelek, P.E.

NORTH FLOODWAY NORTH (NFN1)
PROPOSED CROSS SECTIONS

SHEET 80 OF 112 SHEET

STATE	COUNTY	DRAWN BY: JL	CHECKED BY: JL	
TEXAS	HIDALGO	PROJECT NO. IBM09T0018		SHEET NO.
REHABILITATION OF NORTH FLOODWAY NORTH AND SOUTH LEVEES (FM 1015 - BASELINE RD.)				10.80

6:59:03 PM
6/10/2009
N:\Project\u0450\U0450515\800*WorkingFiles\Dgn\0450NFN1sLVpxs02.dgn

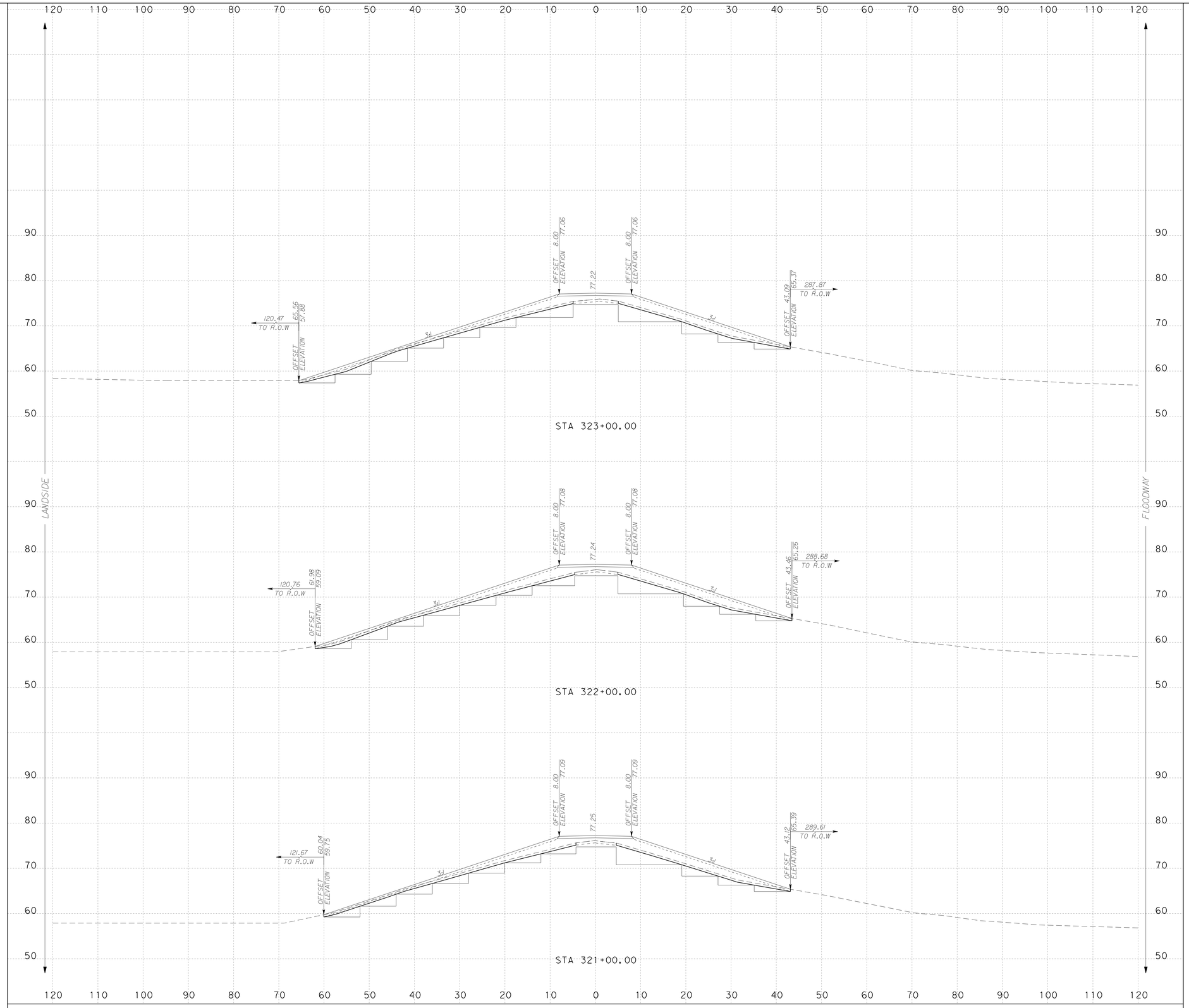

NOTES:

SURFACE DRAINAGE SHALL BE ESTABLISHED BY THE CONTRACTOR PRIOR TO AND DURING CONSTRUCTION TO PREVENT WATER FROM PONDING WITHIN OR ADJACENT TO THE LEVEE STRUCTURE.

IT IS INTENDED THAT THE FINAL SECTION OF THE PROPOSED LEVEE SHALL FACILITATE RAPID DRAINAGE AWAY FROM THE LEVEE STRUCTURE.

SCALE: H : 1"=10'
V : 1"=10'

S&B INFRASTRUCTURE, LTD.
Engineering Management Technology
S&B Infrastructure, Ltd. Firm Registration Number: 1582

STATE OF TEXAS
PHILLIP J. PAWELEK
82739
REGISTERED PROFESSIONAL ENGINEER

The seal appearing on this document was authorized by PHILLIP J. PAWELEK P.E. 82739, on 6-11, 2009.

Phillip J. Pawelek, P.E.

NORTH FLOODWAY NORTH (NFN1)
PROPOSED CROSS SECTIONS

SHEET 81 OF 112 SHEET

STATE	COUNTY	DRAWN BY: JL	CHECKED BY: JL	
TEXAS	HIDALGO	PROJECT NO. IBM09T0018		SHEET NO.
REHABILITATION OF NORTH FLOODWAY NORTH AND SOUTH LEVEES (FM 1015 - BASELINE RD.)				10.81

6:59:06 PM
6/10/2009
N:\Project\u0450\U0450515\800+WorkingFiles\Dgn\0450NFN1sLVpxs02.dgn

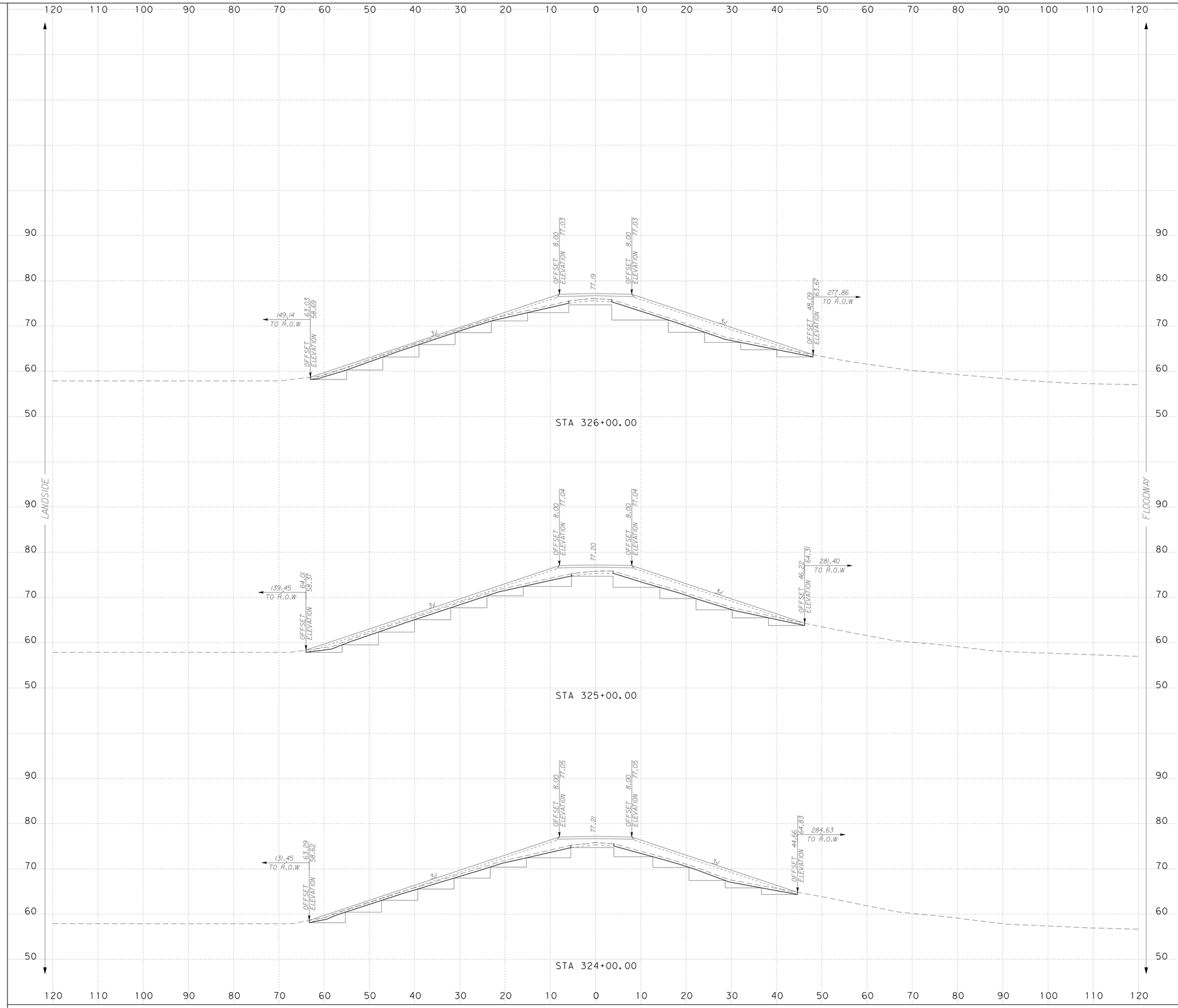

NOTES:

SURFACE DRAINAGE SHALL BE ESTABLISHED BY THE CONTRACTOR PRIOR TO AND DURING CONSTRUCTION TO PREVENT WATER FROM PONDING WITHIN OR ADJACENT TO THE LEVEE STRUCTURE.

IT IS INTENDED THAT THE FINAL SECTION OF THE PROPOSED LEVEE SHALL FACILITATE RAPID DRAINAGE AWAY FROM THE LEVEE STRUCTURE.

SCALE: H : 1"=10'
V : 1"=10'

INTERNATIONAL BOUNDARY AND WATER COMMISSION
COMISION INTERNACIONAL DE LIMITES Y AGUAS

S&B INFRASTRUCTURE, LTD.
Engineering Management Technology

S&B Infrastructure, Ltd. Firm Registration Number: 1582

STATE OF TEXAS
PHILLIP J. PAWELEK
82739
REGISTERED PROFESSIONAL ENGINEER

The seal appearing on this document was authorized by PHILLIP J. PAWELEK P.E. 82739, on 6-11, 2009.

Phillip J. Pawelek, P.E.

NORTH FLOODWAY NORTH (NFN1)
PROPOSED CROSS SECTIONS

SHEET 82 OF 112 SHEET

STATE	COUNTY	DRAWN BY: JL	CHECKED BY: JL	
TEXAS	HIDALGO	PROJECT NO. IBM09T0018		SHEET NO.
REHABILITATION OF NORTH FLOODWAY NORTH AND SOUTH LEVEES (FM 1015 - BASELINE RD.)				10.82

6:59:09 PM 6/10/2009

N:\Project\0450\0450515\800\WorkingFiles\Dgn\0450NFN1sLVpxs02.dgn

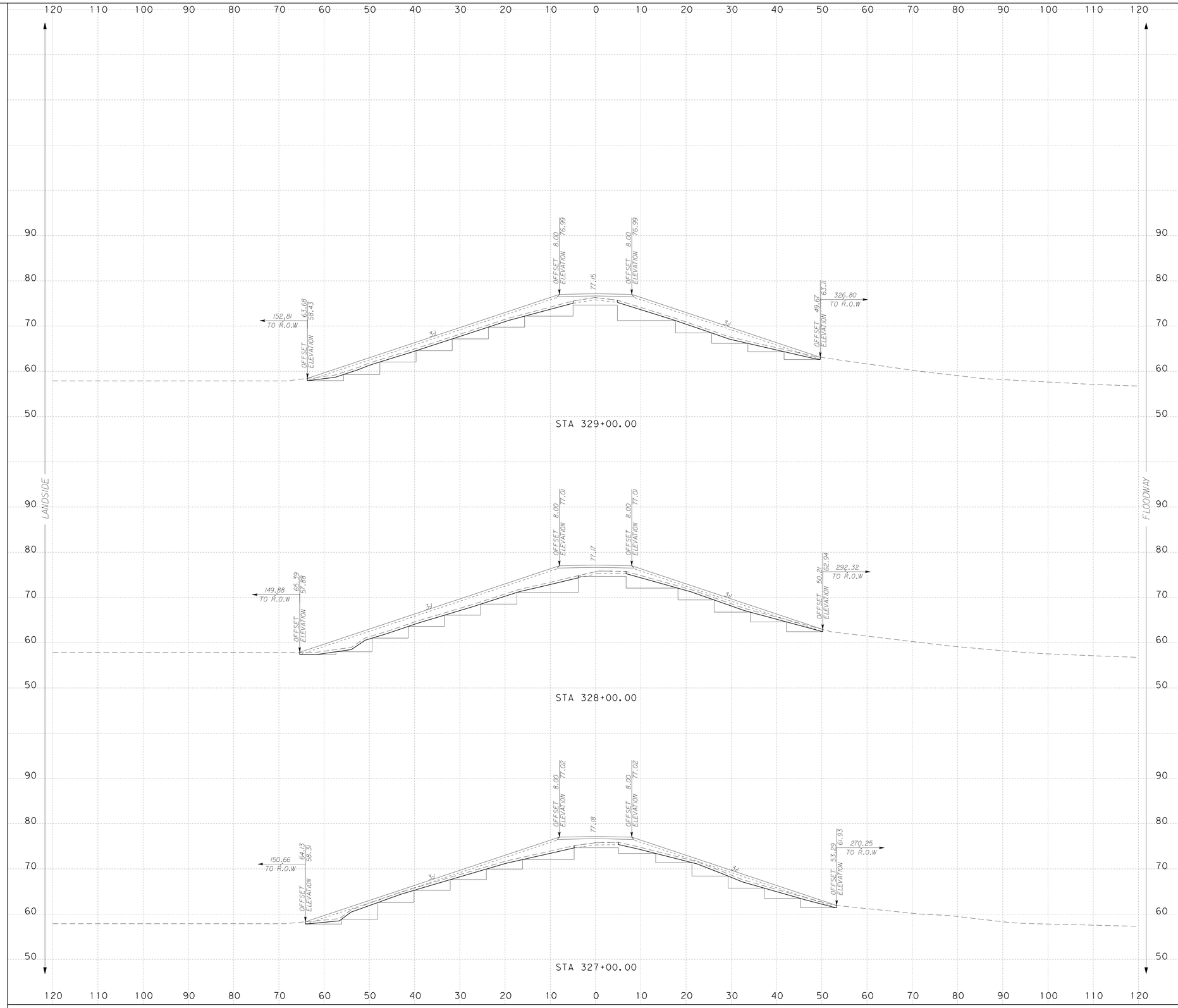

NOTES:

SURFACE DRAINAGE SHALL BE ESTABLISHED BY THE CONTRACTOR PRIOR TO AND DURING CONSTRUCTION TO PREVENT WATER FROM PONDING WITHIN OR ADJACENT TO THE LEVEE STRUCTURE.

IT IS INTENDED THAT THE FINAL SECTION OF THE PROPOSED LEVEE SHALL FACILITATE RAPID DRAINAGE AWAY FROM THE LEVEE STRUCTURE.

SCALE: H : 1"=10'
V : 1"=10'

INTERNATIONAL BOUNDARY AND WATER COMMISSION
COMISION INTERNACIONAL DE LIMITES Y AGUAS

S&B INFRASTRUCTURE, LTD.
Engineering Management Technology

S&B Infrastructure, Ltd. Firm Registration Number: 1582

STATE OF TEXAS
PHILLIP J. PAWELEK
82739
REGISTERED PROFESSIONAL ENGINEER

The seal appearing on this document was authorized by PHILLIP J. PAWELEK P.E. 82739, on 6-11, 2009.

Phillip J. Pawelek, P.E.

NORTH FLOODWAY NORTH (NFN1) PROPOSED CROSS SECTIONS

SHEET 83 OF 112 SHEET

STATE	COUNTY	DRAWN BY: JL	CHECKED BY: JL	
TEXAS	HIDALGO	PROJECT NO. IBM09T0018		SHEET NO.
REHABILITATION OF NORTH FLOODWAY NORTH AND SOUTH LEVEES (FM 1015 - BASELINE RD.)				10.83

N:\Project\0450\0450515\800#WorkingFiles\Dgn\0450NFN1sLVpxs02.dgn
6/10/2009 6:59:12 PM

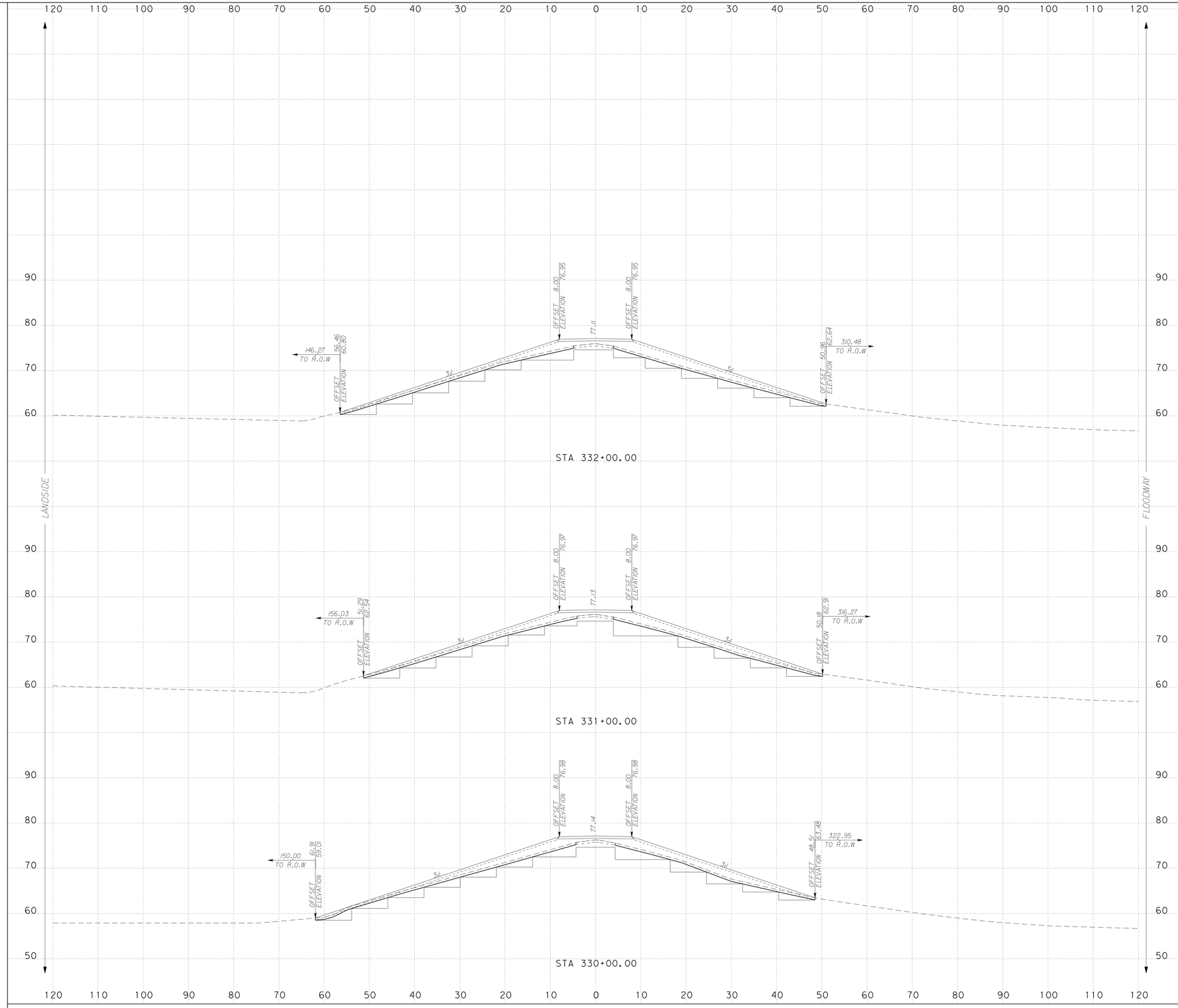

NOTES:

SURFACE DRAINAGE SHALL BE ESTABLISHED BY THE CONTRACTOR PRIOR TO AND DURING CONSTRUCTION TO PREVENT WATER FROM PONDING WITHIN OR ADJACENT TO THE LEVEE STRUCTURE.

IT IS INTENDED THAT THE FINAL SECTION OF THE PROPOSED LEVEE SHALL FACILITATE RAPID DRAINAGE AWAY FROM THE LEVEE STRUCTURE.

SCALE: H : 1"=10'
V : 1"=10'

S&B INFRASTRUCTURE, LTD.
Engineering Management Technology

S&B Infrastructure, Ltd. Firm Registration Number: 1582

STATE OF TEXAS
PHILLIP J. PAWELEK
82739
REGISTERED PROFESSIONAL ENGINEER

The seal appearing on this document was authorized by PHILLIP J. PAWELEK P.E. 82739, on 6-11, 2009

Phillip J. Pawelek, P.E.

NORTH FLOODWAY NORTH (NFN1)
PROPOSED CROSS SECTIONS

SHEET 84 OF 112 SHEET

STATE	COUNTY	DRAWN BY: JL	CHECKED BY: JL	
TEXAS	HIDALGO	PROJECT NO. IBM09T0018		SHEET NO.
REHABILITATION OF NORTH FLOODWAY NORTH AND SOUTH LEVEES (FM 1015 - BASELINE RD.)				10.84

6:59:14 PM
6/10/2009
N:\Project\u0450\U045051\800\WorkingFiles\Dgn\0450NFN1sLVpxs02.dgn

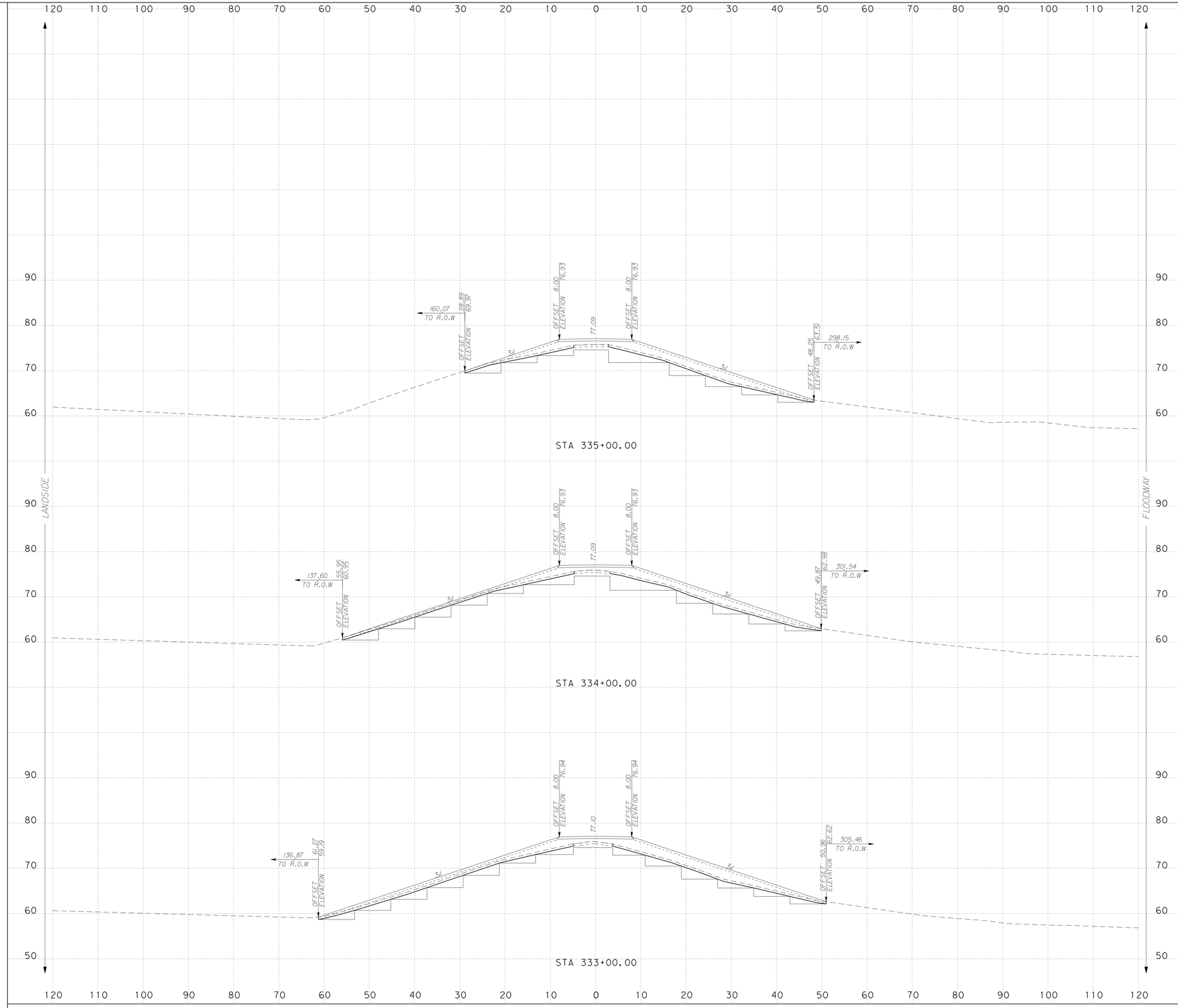

NOTES:

SURFACE DRAINAGE SHALL BE ESTABLISHED BY THE CONTRACTOR PRIOR TO AND DURING CONSTRUCTION TO PREVENT WATER FROM PONDING WITHIN OR ADJACENT TO THE LEVEE STRUCTURE.

IT IS INTENDED THAT THE FINAL SECTION OF THE PROPOSED LEVEE SHALL FACILITATE RAPID DRAINAGE AWAY FROM THE LEVEE STRUCTURE.

SCALE: H : 1"=10'
V : 1"=10'

INTERNATIONAL BOUNDARY AND WATER COMMISSION
COMISION INTERNACIONAL DE LIMITES Y AGUAS

S&B INFRASTRUCTURE, LTD.
Engineering Management Technology

S&B Infrastructure, Ltd. Firm Registration Number: 1582

STATE OF TEXAS
PHILLIP J. PAWELEK
82739
REGISTERED PROFESSIONAL ENGINEER

The seal appearing on this document was authorized by PHILLIP J. PAWELEK P.E. 82739, on 6-11, 2009

Phillip J. Pawelek, P.E.

NORTH FLOODWAY NORTH (NFN1)
PROPOSED CROSS SECTIONS

SHEET 85 OF 112 SHEET

STATE	COUNTY	DRAWN BY: JL	CHECKED BY: JL	
TEXAS	HIDALGO	PROJECT NO. IBM09T0018		SHEET NO.
REHABILITATION OF NORTH FLOODWAY NORTH AND SOUTH LEVEES (FM 1015 - BASELINE RD.)				10.85

6/10/2009 6:59:17 PM

N:\Project\u0450\U0450515\8204\WorkingFiles\Dgn\0450NFN1sLVpxs02.dgn

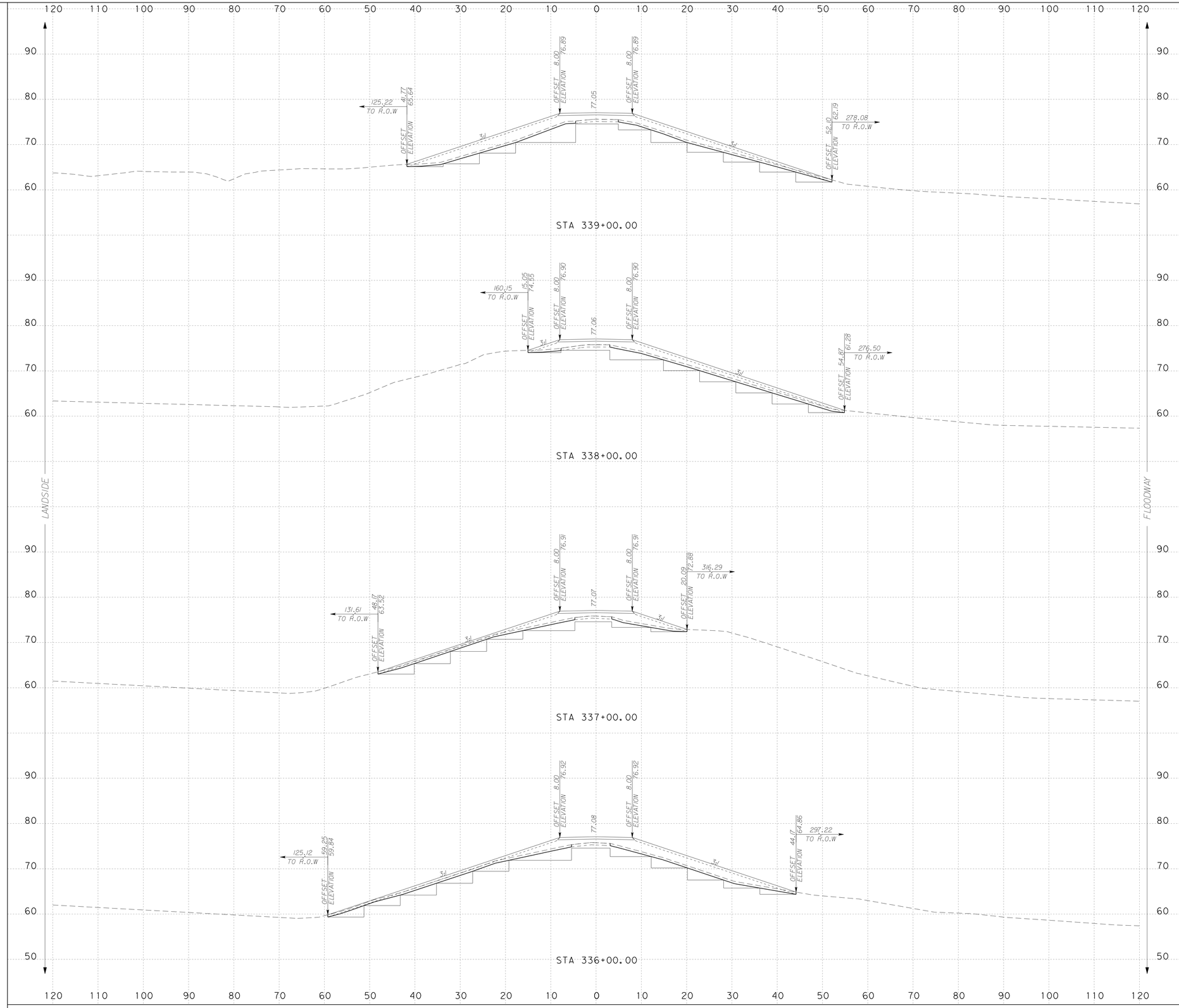

...\Dgn\0450NFN1sLVpxs02.dgn

NOTES:

SURFACE DRAINAGE SHALL BE ESTABLISHED BY THE CONTRACTOR PRIOR TO AND DURING CONSTRUCTION TO PREVENT WATER FROM PONDING WITHIN OR ADJACENT TO THE LEVEE STRUCTURE.

IT IS INTENDED THAT THE FINAL SECTION OF THE PROPOSED LEVEE SHALL FACILITATE RAPID DRAINAGE AWAY FROM THE LEVEE STRUCTURE.

SCALE: H : 1"=10'
V : 1"=10'

S&B INFRASTRUCTURE, LTD.
Engineering Management Technology

S&B Infrastructure, Ltd. Firm Registration Number: 1582

STATE OF TEXAS
PHILLIP J. PAWELEK
82739
REGISTERED PROFESSIONAL ENGINEER

The seal appearing on this document was authorized by PHILLIP J. PAWELEK P.E. 82739, on 6-11, 2009.

Phillip J. Pawelek, P.E.

NORTH FLOODWAY NORTH (NFN1)
PROPOSED CROSS SECTIONS

SHEET 86 OF 112 SHEET

STATE	COUNTY	DRAWN BY: JL	CHECKED BY: JL	
TEXAS	HIDALGO	PROJECT NO. IBM09T0018		SHEET NO.
REHABILITATION OF NORTH FLOODWAY NORTH AND SOUTH LEVEES (FM 1015 - BASELINE RD.)				10.86

6:59:20 PM
6/10/2009
N:\Project\u0450\U0450515\800+WorkingFiles\Dgn\0450NFN1sLVpxs02.dgn

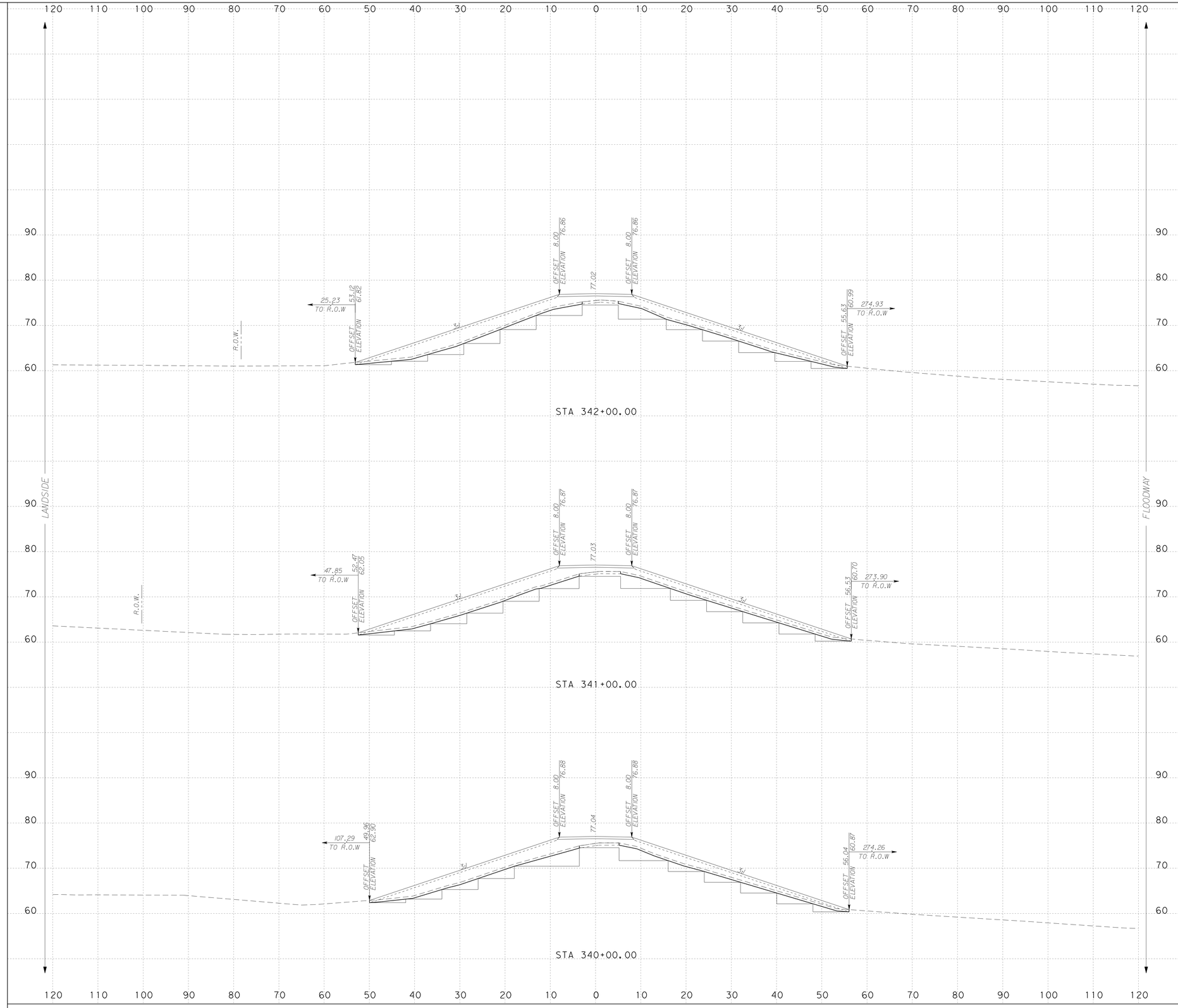

NOTES:

SURFACE DRAINAGE SHALL BE ESTABLISHED BY THE CONTRACTOR PRIOR TO AND DURING CONSTRUCTION TO PREVENT WATER FROM PONDING WITHIN OR ADJACENT TO THE LEVEE STRUCTURE.

IT IS INTENDED THAT THE FINAL SECTION OF THE PROPOSED LEVEE SHALL FACILITATE RAPID DRAINAGE AWAY FROM THE LEVEE STRUCTURE.

SCALE: H : 1"=10'
V : 1"=10'

S&B INFRASTRUCTURE, LTD.
Engineering Management Technology
S&B Infrastructure, Ltd. Firm Registration Number: 1582

STATE OF TEXAS
PHILLIP J. PAWELEK
82739
REGISTERED PROFESSIONAL ENGINEER

The seal appearing on this document was authorized by PHILLIP J. PAWELEK P.E. 82739, on 6-11, 2009

Phillip J. Pawelek, P.E.

NORTH FLOODWAY NORTH (NFN1)
PROPOSED CROSS SECTIONS

SHEET 87 OF 112 SHEET

STATE	COUNTY	DRAWN BY: JL	CHECKED BY: JL	
TEXAS	HIDALGO	PROJECT NO. IBM09T0018		SHEET NO.
REHABILITATION OF NORTH FLOODWAY NORTH AND SOUTH LEVEES (FM 1015 - BASELINE RD.)				10.87

6:59:23 PM
6/10/2009
N:\Project\U0450\U0450515\8204\WorkingFiles\Dgn\0450NFN1sLVpxs02.dgn

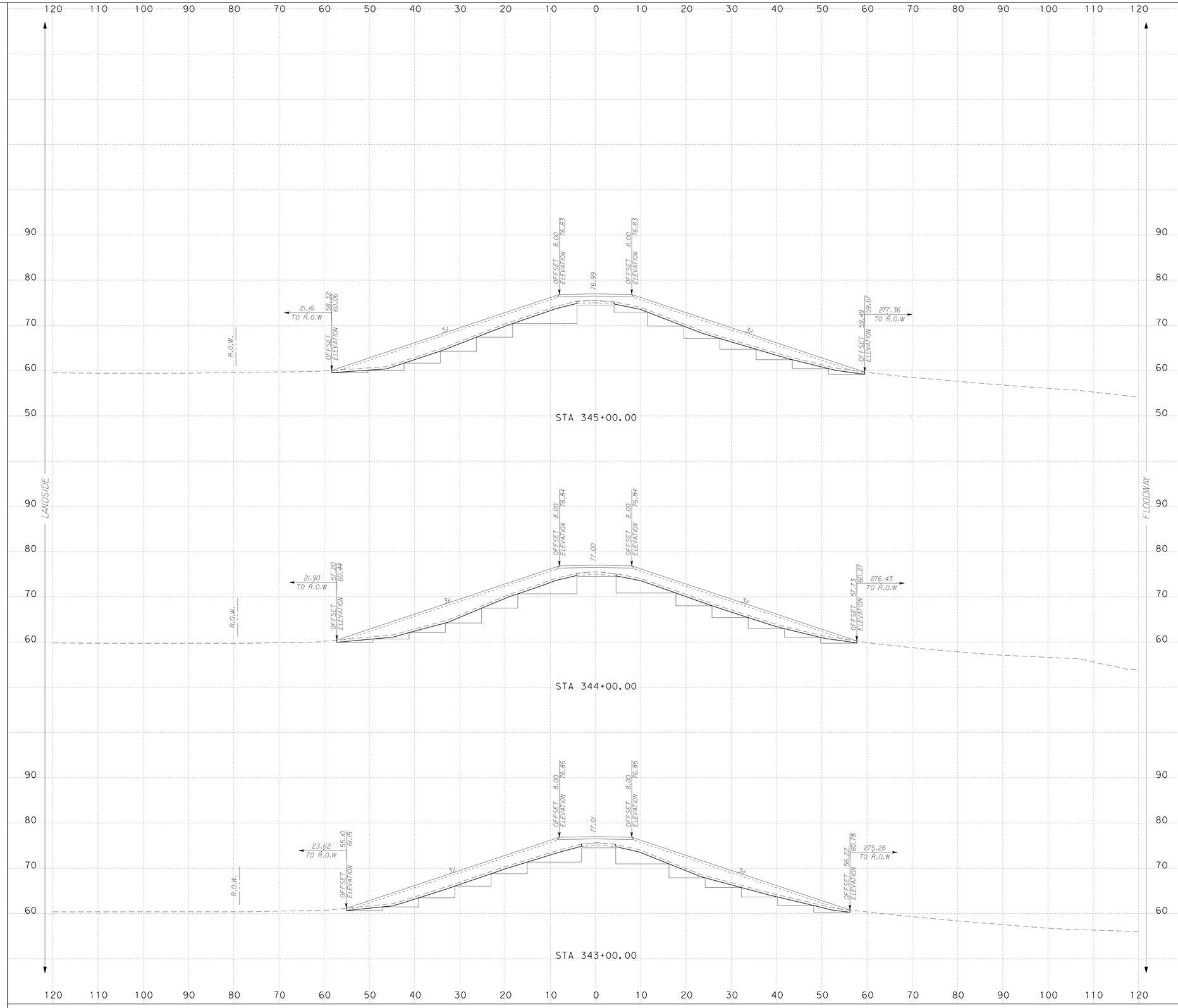

NOTES:

SURFACE DRAINAGE SHALL BE ESTABLISHED BY THE CONTRACTOR PRIOR TO AND DURING CONSTRUCTION TO PREVENT WATER FROM PONDING WITHIN OR ADJACENT TO THE LEVEE STRUCTURE.

IT IS INTENDED THAT THE FINAL SECTION OF THE PROPOSED LEVEE SHALL FACILITATE RAPID DRAINAGE AWAY FROM THE LEVEE STRUCTURE.

SCALE: H : 1"=10'
V : 1"=10'

S&B INFRASTRUCTURE, LTD.
Engineering Management Technology
S&B Infrastructure, Ltd. Firm Registration Number: 1582

STATE OF TEXAS
PHILLIP J. PAWELEK
82739
REGISTERED PROFESSIONAL ENGINEER

The seal appearing on this document was authorized by PHILLIP J. PAWELEK P.E. 82739, on 6-11, 2009.

Phillip J. Pawelek, P.E.

NORTH FLOODWAY NORTH (NFN1)
PROPOSED CROSS SECTIONS

SHEET 88 OF 112 SHEET

STATE	COUNTY	DRAWN BY: JL	CHECKED BY: JL	
TEXAS	HIDALGO	PROJECT NO. IBM09T0018		SHEET NO.
REHABILITATION OF NORTH FLOODWAY NORTH AND SOUTH LEVEES (FM 1015 - BASELINE RD.)				10.88

6:59:26 PM
6/10/2009
N:\Project\u0450\U0450515\800*WorkingFiles\Dgn\0450NFN1sLVpxs02.dgn

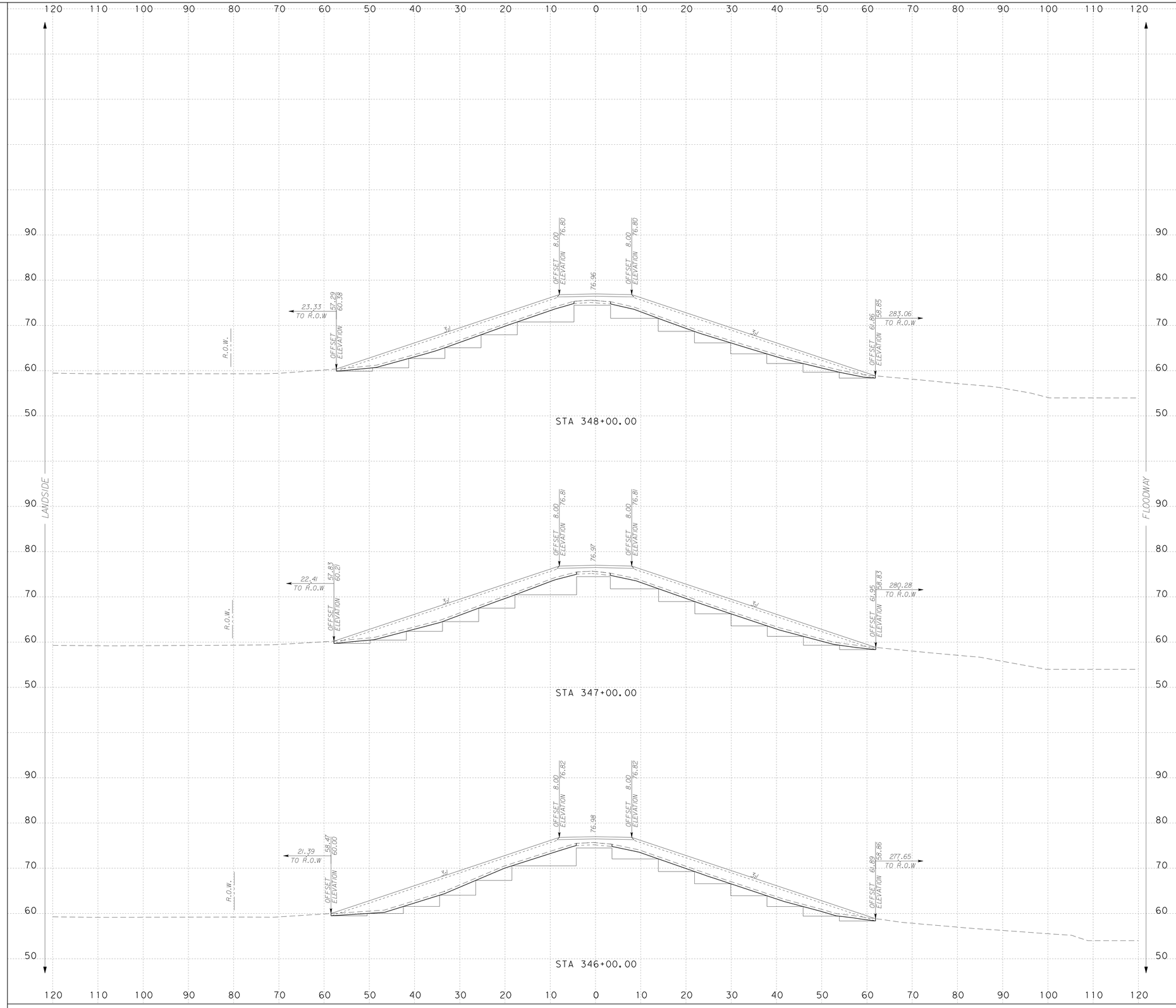

NOTES:

SURFACE DRAINAGE SHALL BE ESTABLISHED BY THE CONTRACTOR PRIOR TO AND DURING CONSTRUCTION TO PREVENT WATER FROM PONDING WITHIN OR ADJACENT TO THE LEVEE STRUCTURE.

IT IS INTENDED THAT THE FINAL SECTION OF THE PROPOSED LEVEE SHALL FACILITATE RAPID DRAINAGE AWAY FROM THE LEVEE STRUCTURE.

SCALE: H : 1"=10'
V : 1"=10'

S&B INFRASTRUCTURE, LTD.
Engineering Management Technology

S&B Infrastructure, Ltd. Firm Registration Number: 1582

STATE OF TEXAS
PHILLIP J. PAWELEK
82739
REGISTERED PROFESSIONAL ENGINEER

The seal appearing on this document was authorized by PHILLIP J. PAWELEK P.E. 82739, on 6-11, 2009.

Phillip J. Pawelek, P.E.

NORTH FLOODWAY NORTH (NFN1)
PROPOSED CROSS SECTIONS

SHEET 89 OF 112 SHEET

STATE	COUNTY	DRAWN BY: JL	CHECKED BY: JL	
TEXAS	HIDALGO	PROJECT NO. IBM09T0018		SHEET NO.
REHABILITATION OF NORTH FLOODWAY NORTH AND SOUTH LEVEES (FM 1015 - BASELINE RD.)				10.89

6:59:28 PM
6/10/2009
N:\Project\u0450\U0450515\800*WorkingFiles\Dgn\0450NFN1sLVpxs02.dgn

...\Dgn\0450NFN1sLVpxs02.dgn

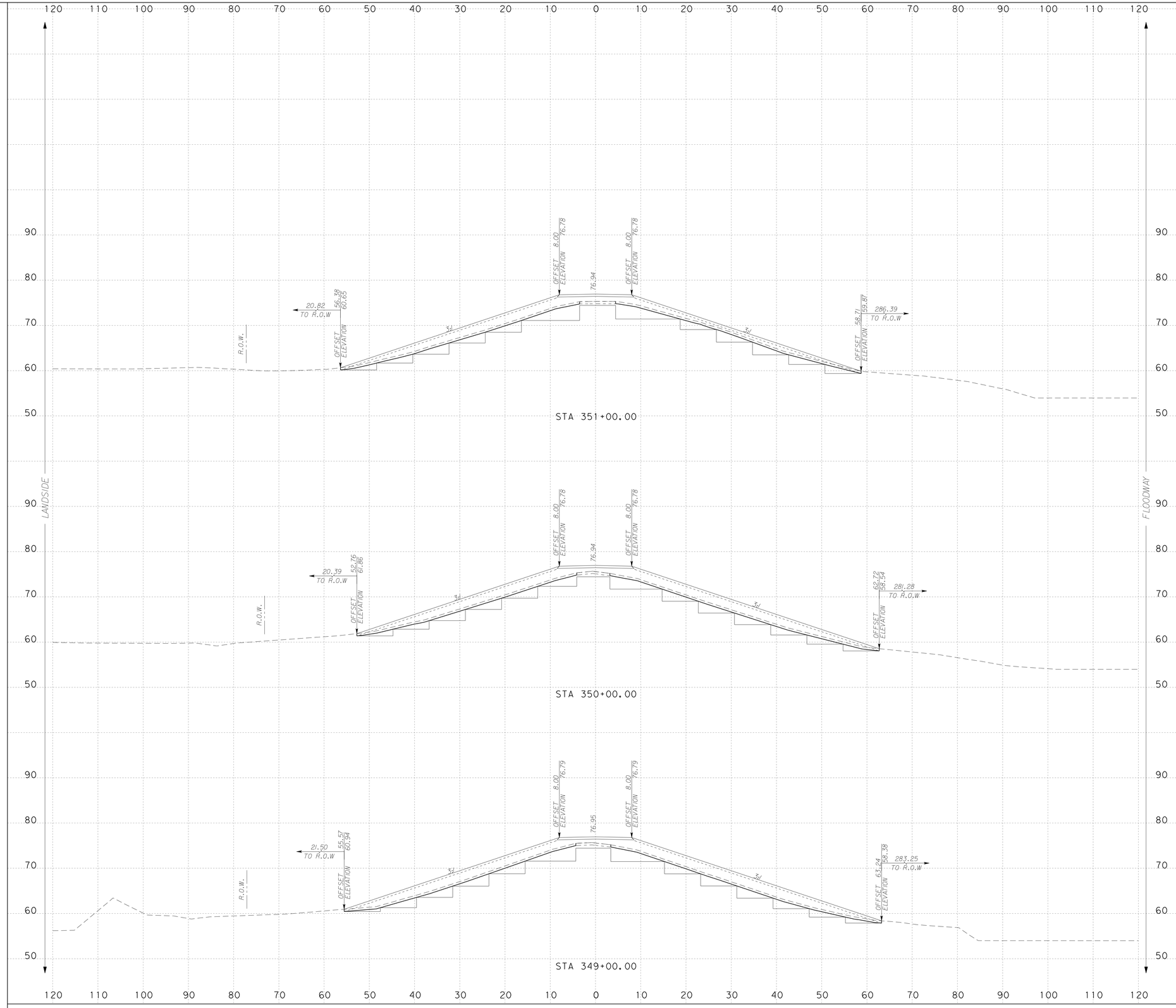

NOTES:

SURFACE DRAINAGE SHALL BE ESTABLISHED BY THE CONTRACTOR PRIOR TO AND DURING CONSTRUCTION TO PREVENT WATER FROM PONDING WITHIN OR ADJACENT TO THE LEVEE STRUCTURE.

IT IS INTENDED THAT THE FINAL SECTION OF THE PROPOSED LEVEE SHALL FACILITATE RAPID DRAINAGE AWAY FROM THE LEVEE STRUCTURE.

SCALE: H : 1"=10'
V : 1"=10'

S&B INFRASTRUCTURE, LTD.
Engineering Management Technology

S&B Infrastructure, Ltd. Firm Registration Number: 1582

STATE OF TEXAS
PHILLIP J. PAWELEK
82739
REGISTERED PROFESSIONAL ENGINEER

The seal appearing on this document was authorized by PHILLIP J. PAWELEK P.E. 82739, on 6-11, 2009

Phillip J. Pawelek, P.E.

NORTH FLOODWAY NORTH (NFN1)
PROPOSED CROSS SECTIONS

SHEET 90 OF 112 SHEET

STATE	COUNTY	DRAWN BY: JL	CHECKED BY: JL	
TEXAS	HIDALGO	PROJECT NO. IBM09T0018		SHEET NO.
REHABILITATION OF NORTH FLOODWAY NORTH AND SOUTH LEVEES (FM 1015 - BASELINE RD.)				10.90

6:59:31 PM 6/10/2009

N:\Project\u0450\U045051S\800\WorkingFiles\Dgn\0450NFN1sLVpxs02.dgn

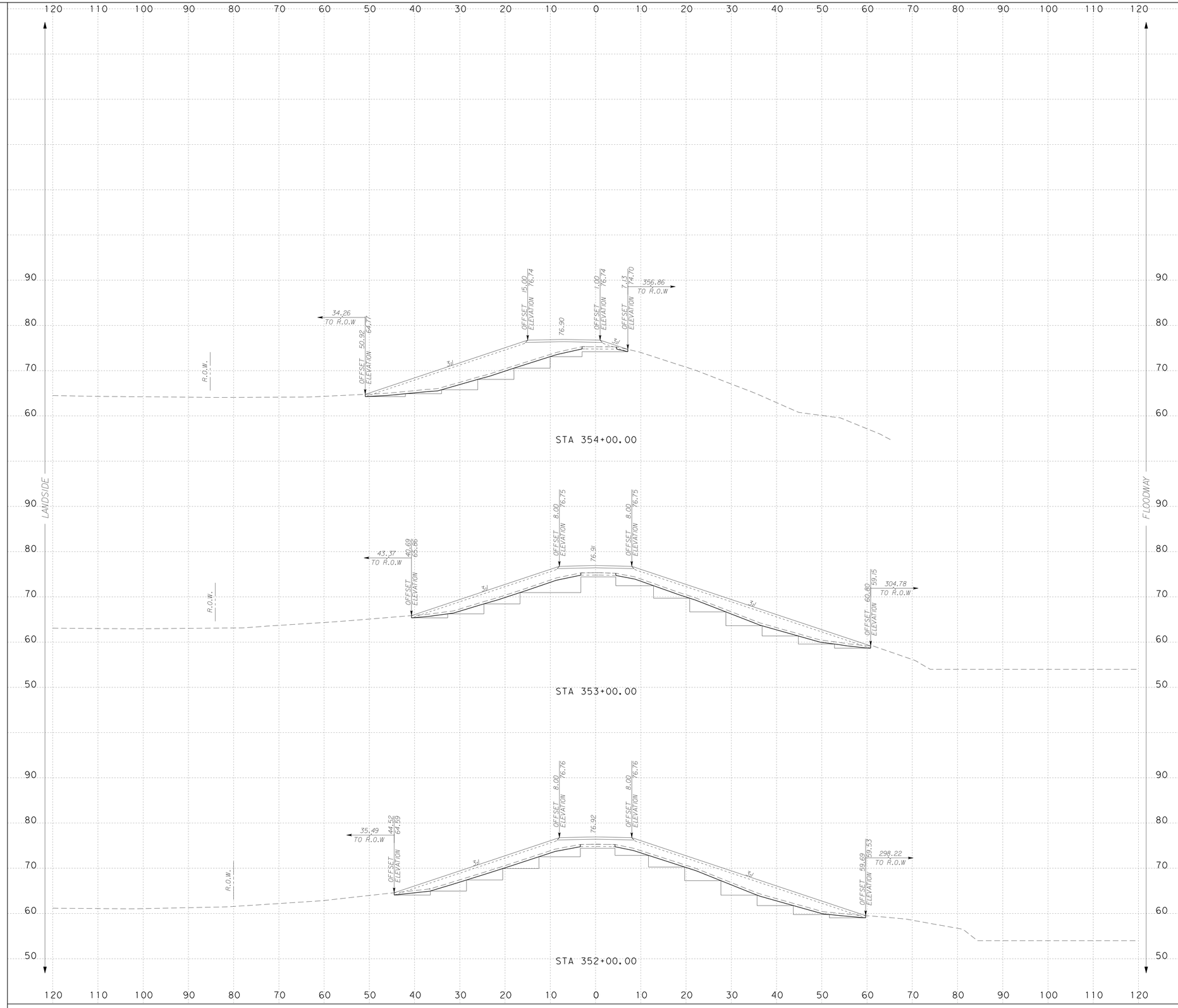

NOTES:

SURFACE DRAINAGE SHALL BE ESTABLISHED BY THE CONTRACTOR PRIOR TO AND DURING CONSTRUCTION TO PREVENT WATER FROM PONDING WITHIN OR ADJACENT TO THE LEVEE STRUCTURE.

IT IS INTENDED THAT THE FINAL SECTION OF THE PROPOSED LEVEE SHALL FACILITATE RAPID DRAINAGE AWAY FROM THE LEVEE STRUCTURE.

SCALE: H : 1"=10'
V : 1"=10'

S&B INFRASTRUCTURE, LTD.
Engineering Management Technology

S&B Infrastructure, Ltd. Firm Registration Number: 1582

STATE OF TEXAS
PHILLIP J. PAWELEK
82739
REGISTERED PROFESSIONAL ENGINEER

The seal appearing on this document was authorized by PHILLIP J. PAWELEK P.E. 82739, on 6-11, 2009

Phillip J. Pawelek, P.E.

NORTH FLOODWAY NORTH (NFN1)
PROPOSED CROSS SECTIONS

SHEET 91 OF 112 SHEET

STATE	COUNTY	DRAWN BY: JL	CHECKED BY: JL	
TEXAS	HIDALGO	PROJECT NO. IBM09T0018		SHEET NO.
REHABILITATION OF NORTH FLOODWAY NORTH AND SOUTH LEVEES (FM 1015 - BASELINE RD.)				10.91

6:59:34 PM 6/10/2009 N:\Project\u0450\U045051S\800\WorkingFiles\Dgn\0450NFN1sLVpxs02.dgn

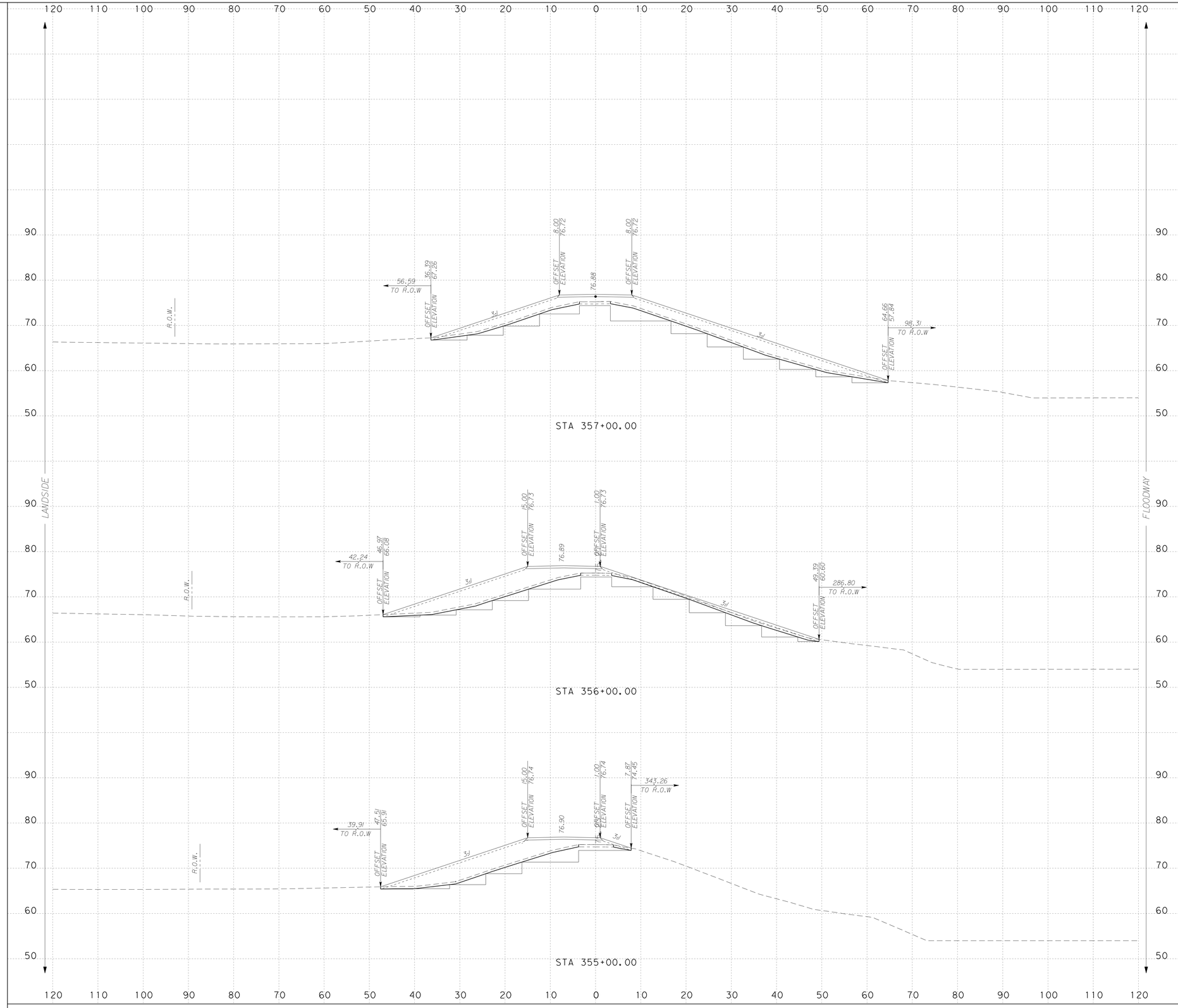

NOTES:

SURFACE DRAINAGE SHALL BE ESTABLISHED BY THE CONTRACTOR PRIOR TO AND DURING CONSTRUCTION TO PREVENT WATER FROM PONDING WITHIN OR ADJACENT TO THE LEVEE STRUCTURE.

IT IS INTENDED THAT THE FINAL SECTION OF THE PROPOSED LEVEE SHALL FACILITATE RAPID DRAINAGE AWAY FROM THE LEVEE STRUCTURE.

SCALE: H : 1"=10'
V : 1"=10'

S&B INFRASTRUCTURE, LTD.
Engineering Management Technology

S&B Infrastructure, Ltd. Firm Registration Number: 1582

STATE OF TEXAS
PHILLIP J. PAWELEK
82739
REGISTERED PROFESSIONAL ENGINEER

The seal appearing on this document was authorized by PHILLIP J. PAWELEK P.E. 82739, on 6-11, 2009.

Phillip J. Pawelek, P.E.

NORTH FLOODWAY NORTH (NFN1)
PROPOSED CROSS SECTIONS

SHEET 92 OF 112 SHEET

STATE	COUNTY	DRAWN BY: JL	CHECKED BY: JL	
TEXAS	HIDALGO	PROJECT NO. IBM09T0018		SHEET NO.
REHABILITATION OF NORTH FLOODWAY NORTH AND SOUTH LEVEES (FM 1015 - BASELINE RD.)				10.92

6:59:37 PM
6/10/2009
N:\Project\u0450\U0450515\800*WorkingFiles\Dgn\0450NFN1sLVpxs02.dgn

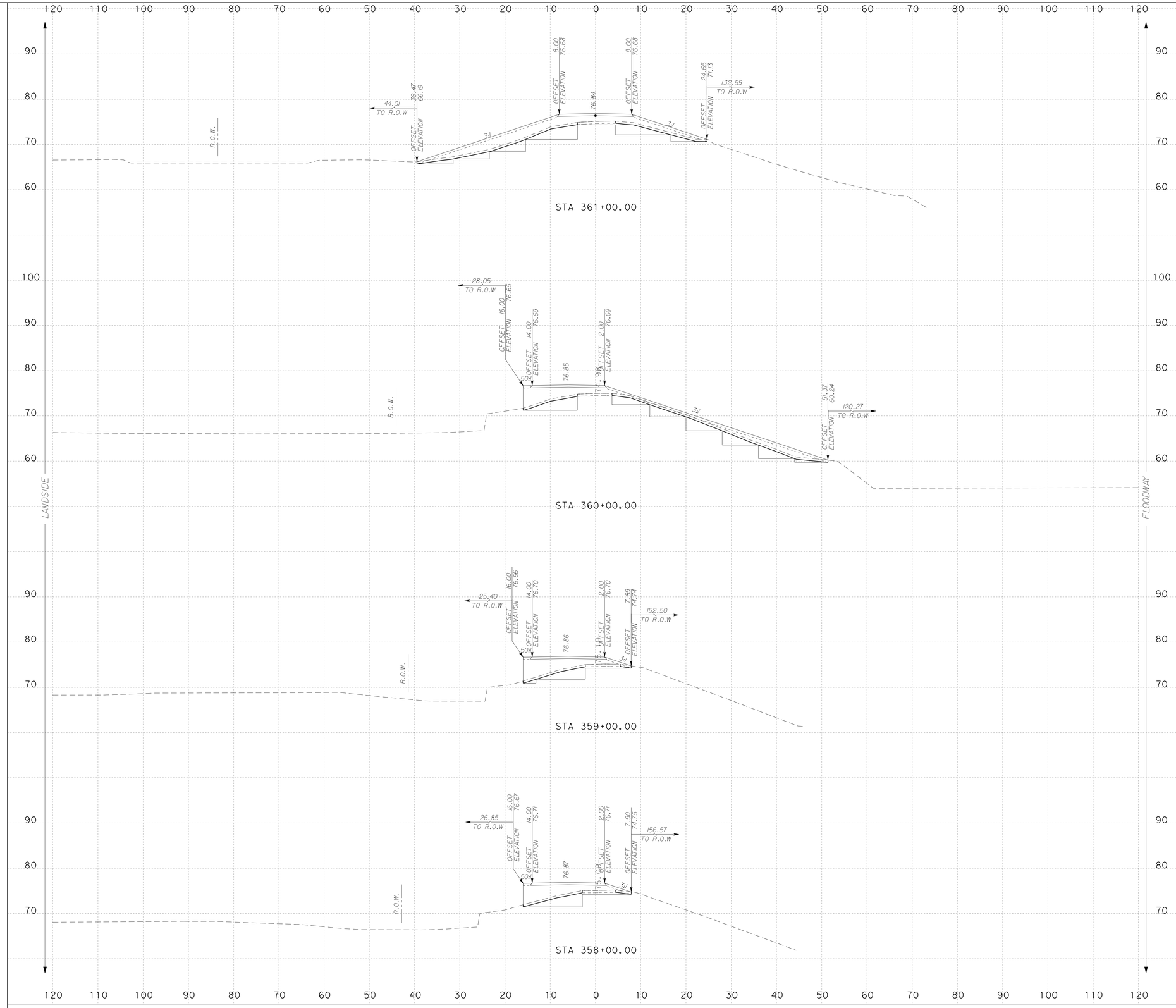

NOTES:

SURFACE DRAINAGE SHALL BE ESTABLISHED BY THE CONTRACTOR PRIOR TO AND DURING CONSTRUCTION TO PREVENT WATER FROM PONDING WITHIN OR ADJACENT TO THE LEVEE STRUCTURE.

IT IS INTENDED THAT THE FINAL SECTION OF THE PROPOSED LEVEE SHALL FACILITATE RAPID DRAINAGE AWAY FROM THE LEVEE STRUCTURE.

SCALE: H : 1"=10'
V : 1"=10'

S&B INFRASTRUCTURE, LTD.
Engineering Management Technology

S&B Infrastructure, Ltd. Firm Registration Number: 1582

STATE OF TEXAS
PHILLIP J. PAWELEK
82739
REGISTERED PROFESSIONAL ENGINEER

The seal appearing on this document was authorized by PHILLIP J. PAWELEK P.E. 82739, on 6-11, 2009.

Phillip J. Pawelek, P.E.

NORTH FLOODWAY NORTH (NFN1)
PROPOSED CROSS SECTIONS

SHEET 93 OF 112 SHEET

STATE	COUNTY	DRAWN BY: JL	CHECKED BY: JL	
TEXAS	HIDALGO	PROJECT NO. IBM09T0018		SHEET NO.
REHABILITATION OF NORTH FLOODWAY NORTH AND SOUTH LEVEES (FM 1015 - BASELINE RD.)				10.93

6:59:40 PM
6/10/2009
N:\Project\u0450\U0450515\800\WorkingFiles\Dgn\0450NFN1sLVpxs02.dgn

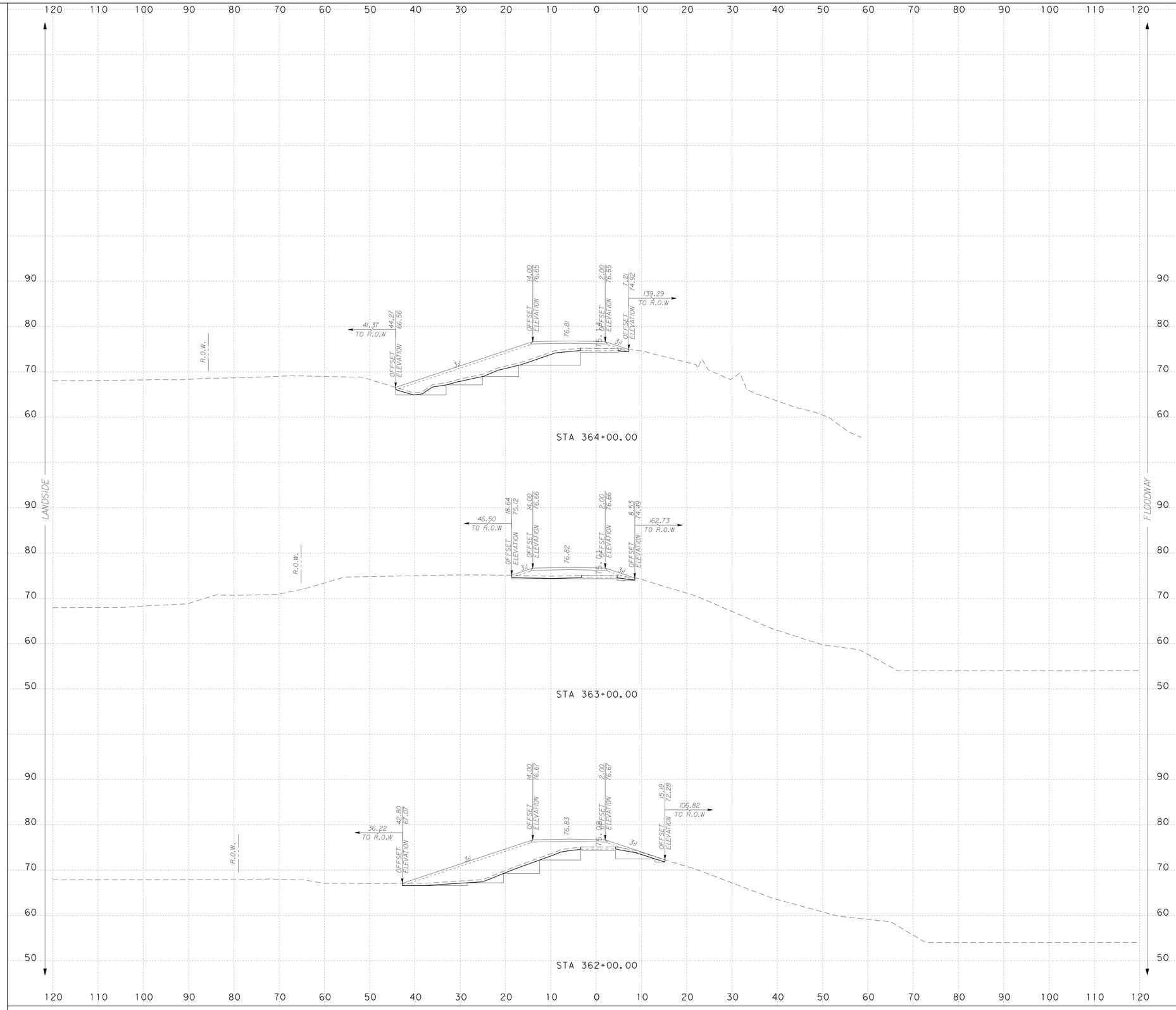

NOTES:

SURFACE DRAINAGE SHALL BE ESTABLISHED BY THE CONTRACTOR PRIOR TO AND DURING CONSTRUCTION TO PREVENT WATER FROM PONDING WITHIN OR ADJACENT TO THE LEVEE STRUCTURE.

IT IS INTENDED THAT THE FINAL SECTION OF THE PROPOSED LEVEE SHALL FACILITATE RAPID DRAINAGE AWAY FROM THE LEVEE STRUCTURE.

SCALE: H : 1"=10'
V : 1"=10'

S&B INFRASTRUCTURE, LTD.
Engineering Management Technology
S&B Infrastructure, Ltd. Firm Registration Number: 1582

STATE OF TEXAS
PHILLIP J. PAWELEK
82739
REGISTERED PROFESSIONAL ENGINEER

The seal appearing on this document was authorized by PHILLIP J. PAWELEK P.E. 82739, on 6-11, 2009.

Phillip J. Pawelek, P.E.

NORTH FLOODWAY NORTH (NFN1) PROPOSED CROSS SECTIONS

SHEET 94 OF 112 SHEET

STATE	COUNTY	DRAWN BY: JL	CHECKED BY: JL	
TEXAS	HIDALGO	PROJECT NO. IBM09T0018		SHEET NO.
REHABILITATION OF NORTH FLOODWAY NORTH AND SOUTH LEVEES (FM 1015 - BASELINE RD.)				10.94

6:59:43 PM
6/10/2009
N:\Project\U450\U450515\800-WorkingFiles\Dgn\0450NFN1sLVpxs02.dgn

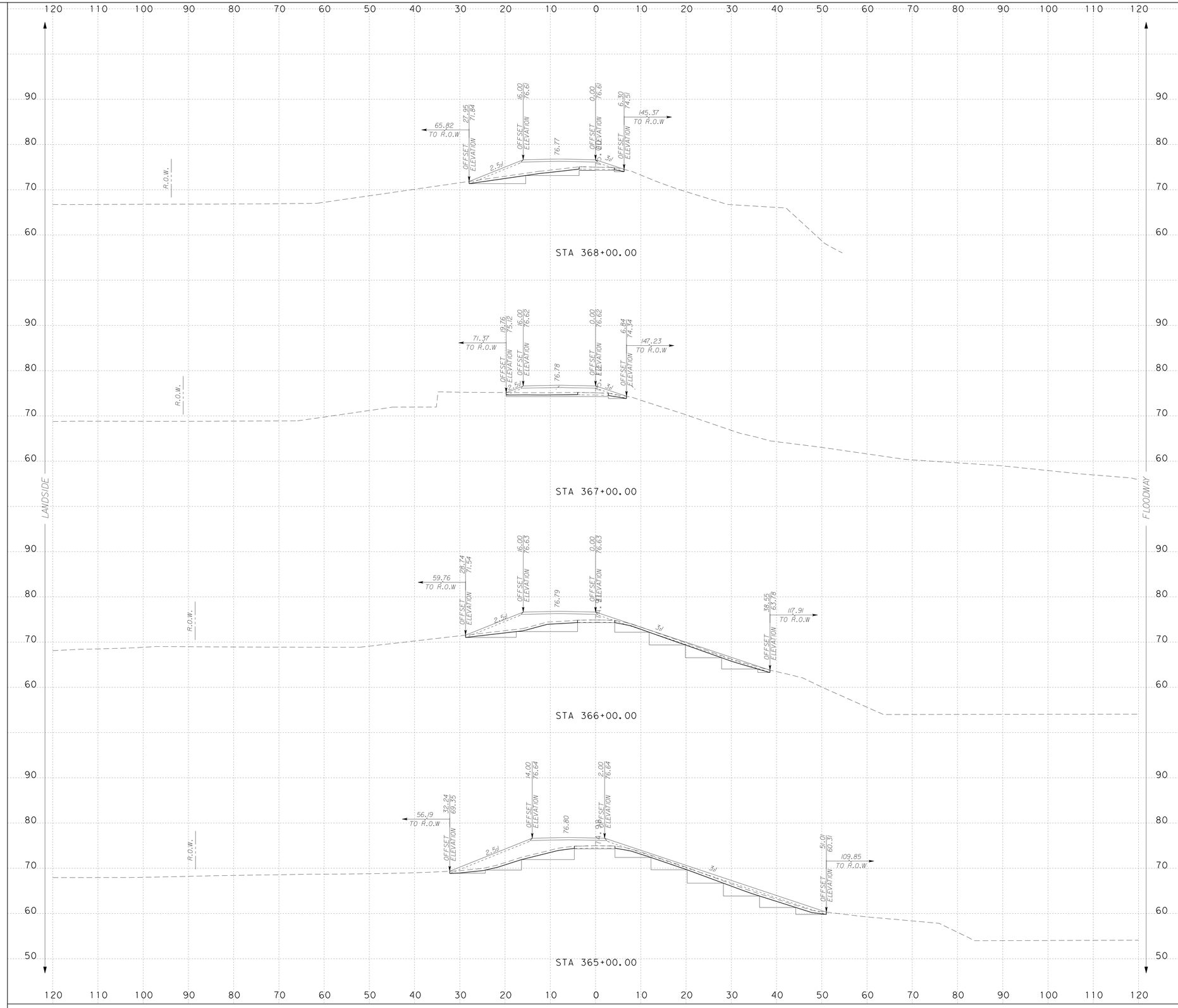

NOTES:

SURFACE DRAINAGE SHALL BE ESTABLISHED BY THE CONTRACTOR PRIOR TO AND DURING CONSTRUCTION TO PREVENT WATER FROM PONDING WITHIN OR ADJACENT TO THE LEVEE STRUCTURE.

IT IS INTENDED THAT THE FINAL SECTION OF THE PROPOSED LEVEE SHALL FACILITATE RAPID DRAINAGE AWAY FROM THE LEVEE STRUCTURE.

SCALE: H : 1"=10'
V : 1"=10'

S&B INFRASTRUCTURE, LTD.
Engineering Management Technology
S&B Infrastructure, Ltd. Firm Registration Number: 1582

STATE OF TEXAS
PHILLIP J. PAWELEK
82739
REGISTERED PROFESSIONAL ENGINEER

The seal appearing on this document was authorized by PHILLIP J. PAWELEK P.E. 82739, on 6-11, 2009

Phillip J. Pawelek, P.E.

NORTH FLOODWAY NORTH (NFN1)
PROPOSED CROSS SECTIONS

SHEET 95 OF 112 SHEET

STATE	COUNTY	DRAWN BY: JL	CHECKED BY: JL	
TEXAS	HIDALGO	PROJECT NO. IBM09T0018		SHEET NO.
REHABILITATION OF NORTH FLOODWAY NORTH AND SOUTH LEVEES (FM 1015 - BASELINE RD.)				10.95

6:59:45 PM
6/10/2009
N:\Project\u0450\U045051\800\WorkingFiles\Dgn\0450NFN1sLVpxs02.dgn

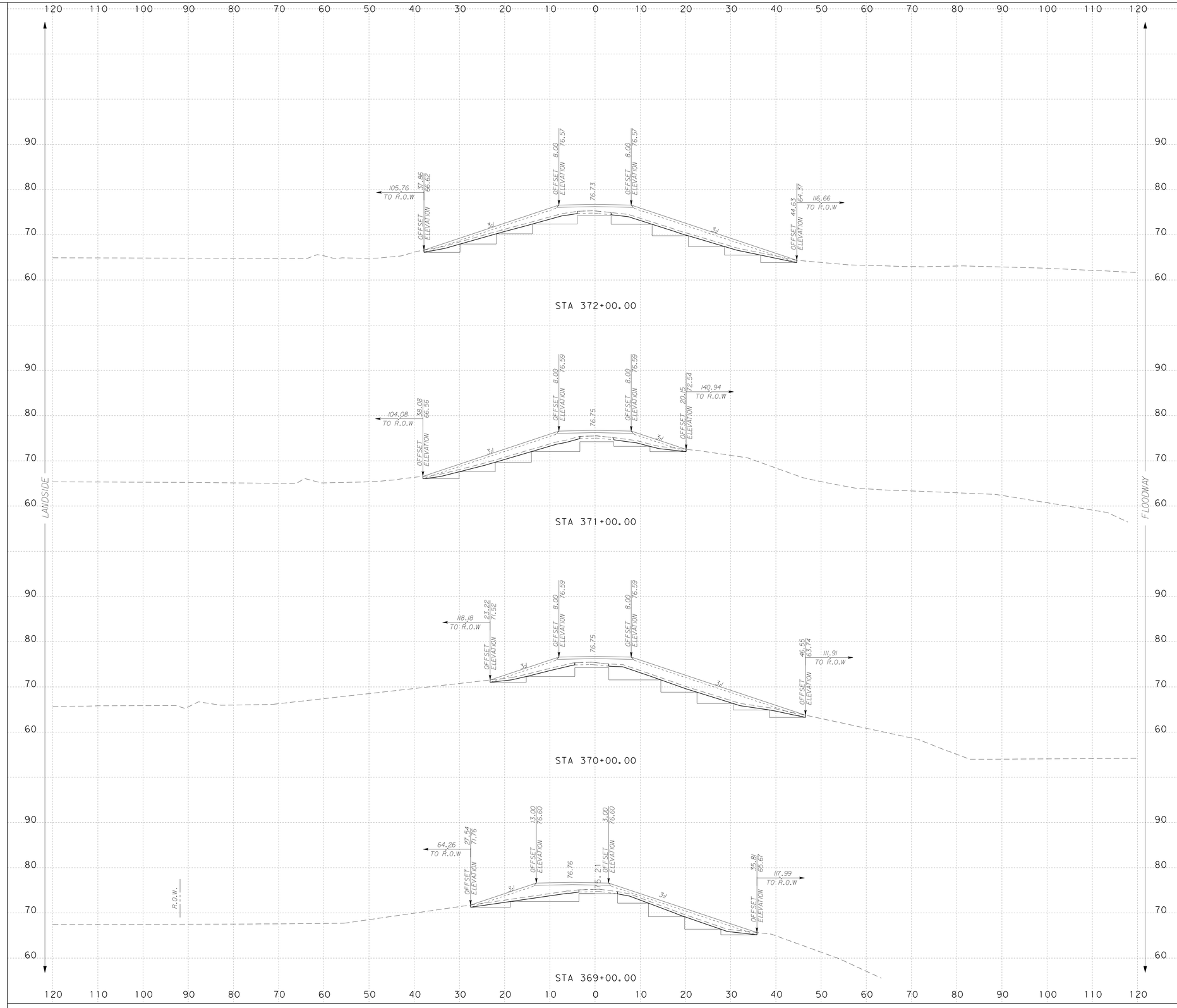

NOTES:

SURFACE DRAINAGE SHALL BE ESTABLISHED BY THE CONTRACTOR PRIOR TO AND DURING CONSTRUCTION TO PREVENT WATER FROM PONDING WITHIN OR ADJACENT TO THE LEVEE STRUCTURE.

IT IS INTENDED THAT THE FINAL SECTION OF THE PROPOSED LEVEE SHALL FACILITATE RAPID DRAINAGE AWAY FROM THE LEVEE STRUCTURE.

SCALE: H : 1"=10'
V : 1"=10'

S&B INFRASTRUCTURE, LTD.
Engineering Management Technology
S&B Infrastructure, Ltd. Firm Registration Number: 1582

STATE OF TEXAS
PHILLIP J. PAWELEK
82739
REGISTERED PROFESSIONAL ENGINEER

The seal appearing on this document was authorized by PHILLIP J. PAWELEK P.E. 82739, on 6-11, 2009.

Phillip J. Pawelek, P.E.

NORTH FLOODWAY NORTH (NFN1)
PROPOSED CROSS SECTIONS

SHEET 96 OF 112 SHEET

STATE	COUNTY	DRAWN BY: JL	CHECKED BY: JL	
TEXAS	HIDALGO	PROJECT NO. IBM09T0018		SHEET NO.
REHABILITATION OF NORTH FLOODWAY NORTH AND SOUTH LEVEES (FM 1015 - BASELINE RD.)				10.96

6:59:48 PM
6/10/2009
N:\Project\0450\0450515\800-WorkingFiles\Dgn\0450NFN1sLVpxs02.dgn

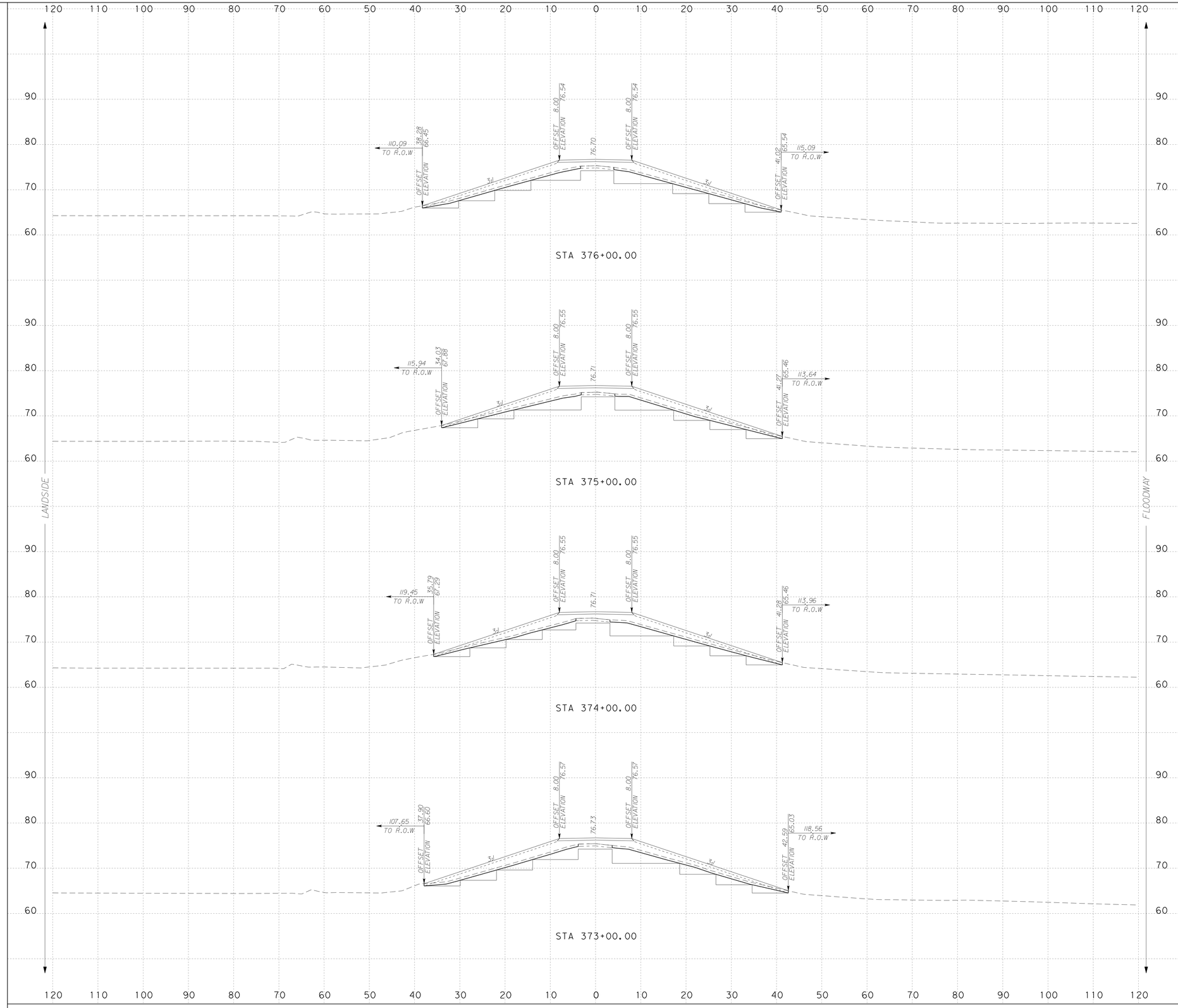

NOTES:

SURFACE DRAINAGE SHALL BE ESTABLISHED BY THE CONTRACTOR PRIOR TO AND DURING CONSTRUCTION TO PREVENT WATER FROM PONDING WITHIN OR ADJACENT TO THE LEVEE STRUCTURE.

IT IS INTENDED THAT THE FINAL SECTION OF THE PROPOSED LEVEE SHALL FACILITATE RAPID DRAINAGE AWAY FROM THE LEVEE STRUCTURE.

SCALE: H : 1"=10'
V : 1"=10'

S&B INFRASTRUCTURE, LTD.
Engineering Management Technology

S&B Infrastructure, Ltd. Firm Registration Number: 1582

STATE OF TEXAS
PHILLIP J. PAWELEK
82739
REGISTERED PROFESSIONAL ENGINEER

The seal appearing on this document was authorized by PHILLIP J. PAWELEK P.E. 82739, on 6-11, 2009

Phillip J. Pawelek, P.E.

NORTH FLOODWAY NORTH (NFN1) PROPOSED CROSS SECTIONS

SHEET 97 OF 112 SHEET

STATE	COUNTY	DRAWN BY: JL	CHECKED BY: JL	
TEXAS	HIDALGO	PROJECT NO. IBM09T0018		SHEET NO.
REHABILITATION OF NORTH FLOODWAY NORTH AND SOUTH LEVEES (FM 1015 - BASELINE RD.)				10.97

N:\Project\u0450\U045051S\800\WorkingFiles\Dgn\0450NFN1sLVpxs02.dgn 6/10/2009 6:59:51 PM

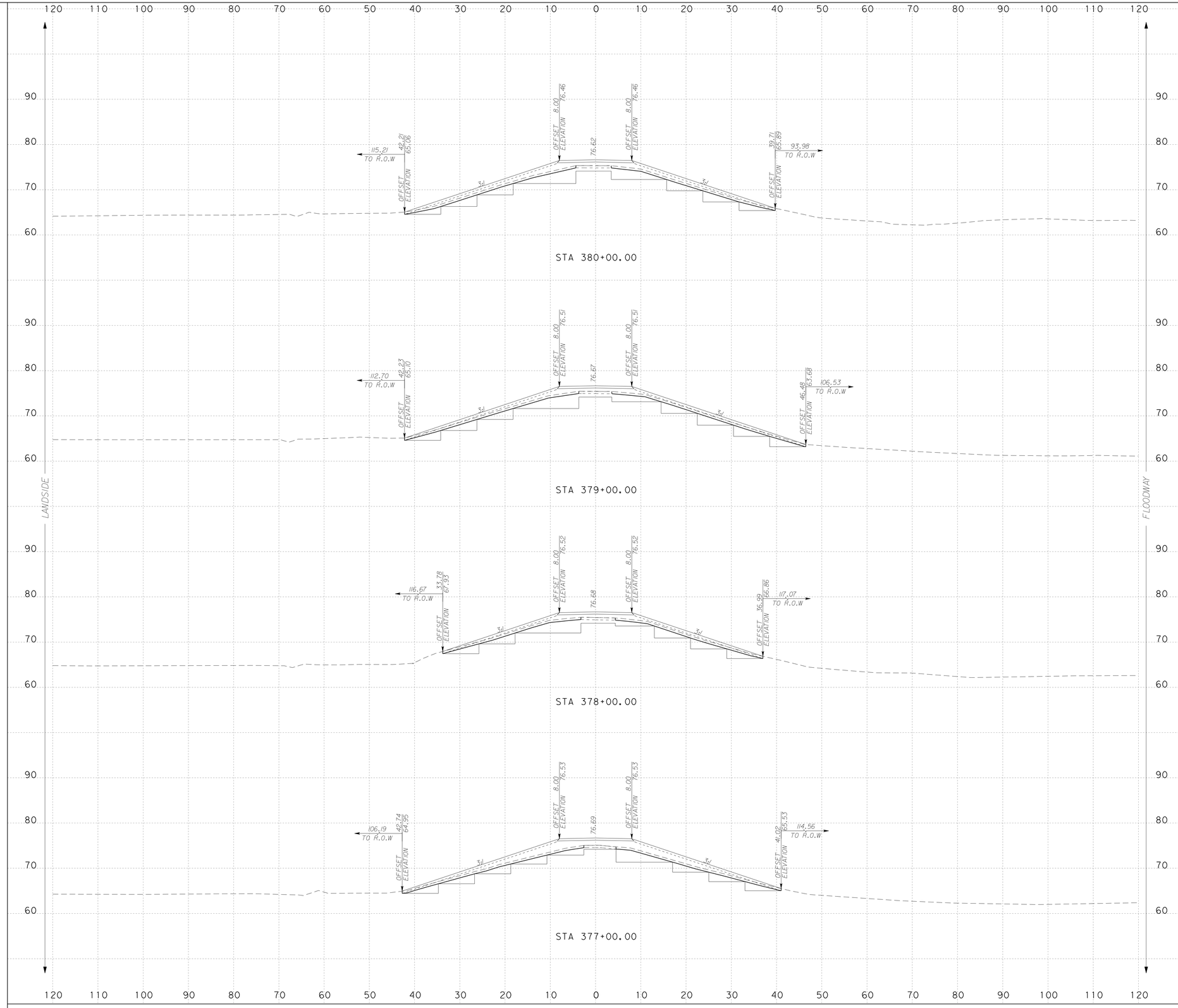

NOTES:

SURFACE DRAINAGE SHALL BE ESTABLISHED BY THE CONTRACTOR PRIOR TO AND DURING CONSTRUCTION TO PREVENT WATER FROM PONDING WITHIN OR ADJACENT TO THE LEVEE STRUCTURE.

IT IS INTENDED THAT THE FINAL SECTION OF THE PROPOSED LEVEE SHALL FACILITATE RAPID DRAINAGE AWAY FROM THE LEVEE STRUCTURE.

SCALE: H : 1"=10'
V : 1"=10'

S&B INFRASTRUCTURE, LTD.
Engineering Management Technology

S&B Infrastructure, Ltd. Firm Registration Number: 1582

STATE OF TEXAS
PHILLIP J. PAWELEK
82739
REGISTERED PROFESSIONAL ENGINEER

The seal appearing on this document was authorized by PHILLIP J. PAWELEK P.E. 82739, on 6-11, 2009

Phillip J. Pawelek, P.E.

NORTH FLOODWAY NORTH (NFN1)
PROPOSED CROSS SECTIONS

SHEET 98 OF 112 SHEET

STATE	COUNTY	DRAWN BY: JL	CHECKED BY: JL	
TEXAS	HIDALGO	PROJECT NO. IBM09T0018		SHEET NO.
REHABILITATION OF NORTH FLOODWAY NORTH AND SOUTH LEVEES (FM 1015 - BASELINE RD.)				10.98

N:\Project\u0450\U045051\800\WorkingFiles\Dgn\0450NFN1sLVpxs02.dgn 6:10/2009 6:59:54 PM

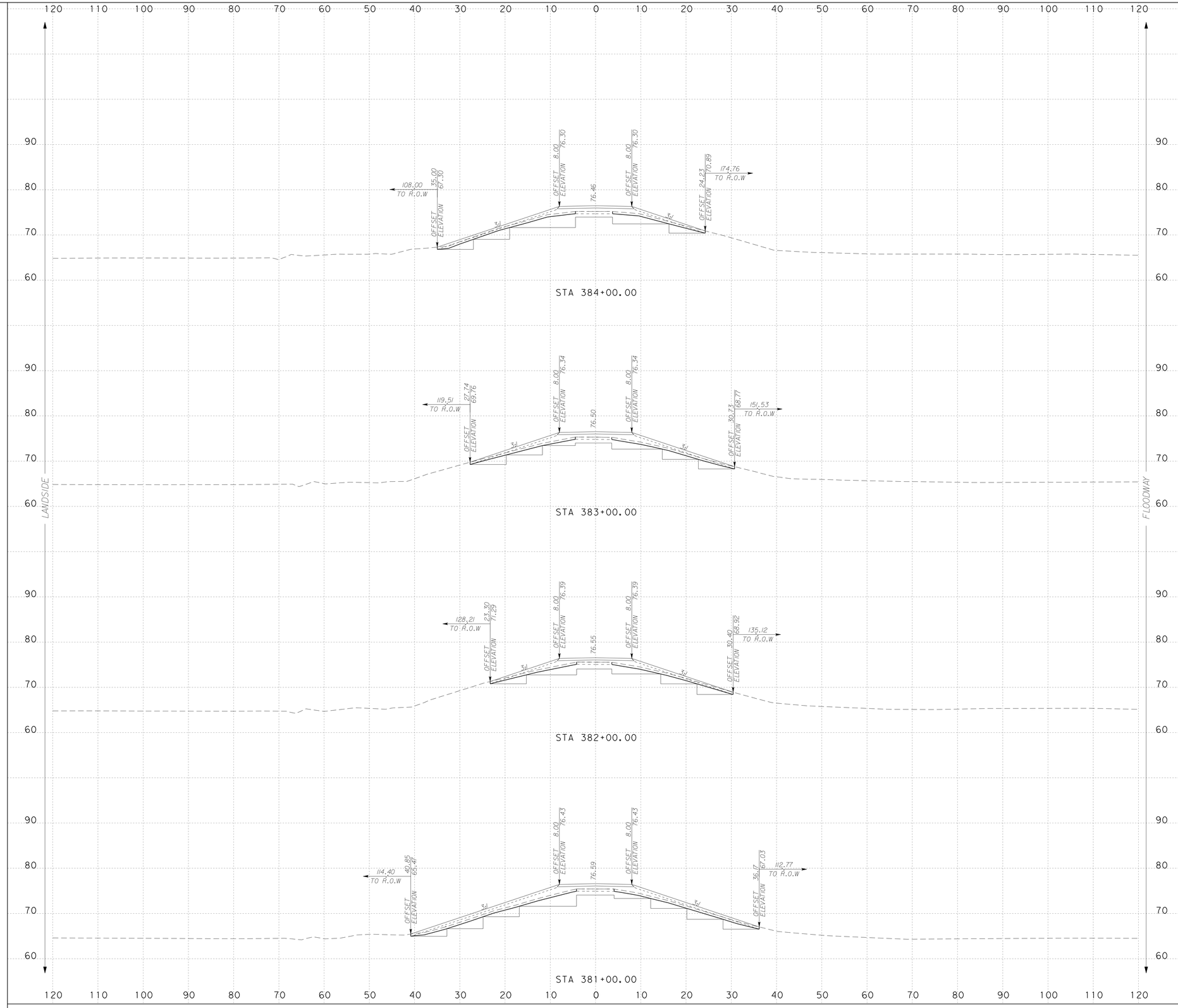

NOTES:

SURFACE DRAINAGE SHALL BE ESTABLISHED BY THE CONTRACTOR PRIOR TO AND DURING CONSTRUCTION TO PREVENT WATER FROM PONDING WITHIN OR ADJACENT TO THE LEVEE STRUCTURE.

IT IS INTENDED THAT THE FINAL SECTION OF THE PROPOSED LEVEE SHALL FACILITATE RAPID DRAINAGE AWAY FROM THE LEVEE STRUCTURE.

SCALE: H : 1"=10'
V : 1"=10'

S&B INFRASTRUCTURE, LTD.
Engineering Management Technology

S&B Infrastructure, Ltd. Firm Registration Number: 1582

STATE OF TEXAS
PHILLIP J. PAWELEK
82739
REGISTERED PROFESSIONAL ENGINEER

The seal appearing on this document was authorized by PHILLIP J. PAWELEK P.E. 82739, on 6-11, 2009.

Phillip J. Pawelek, P.E.

NORTH FLOODWAY NORTH (NFN1)
PROPOSED CROSS SECTIONS

SHEET 99 OF 112 SHEET

STATE	COUNTY	DRAWN BY: JL	CHECKED BY: JL	
TEXAS	HIDALGO	PROJECT NO. IBM09T0018		SHEET NO.
REHABILITATION OF NORTH FLOODWAY NORTH AND SOUTH LEVEES (FM 1015 - BASELINE RD.)				10.99

6:59:57 PM
6/10/2009
N:\Project\u0450\U0450515\800+WorkingFiles\Dgn\0450NFN1sLVpxs02.dgn

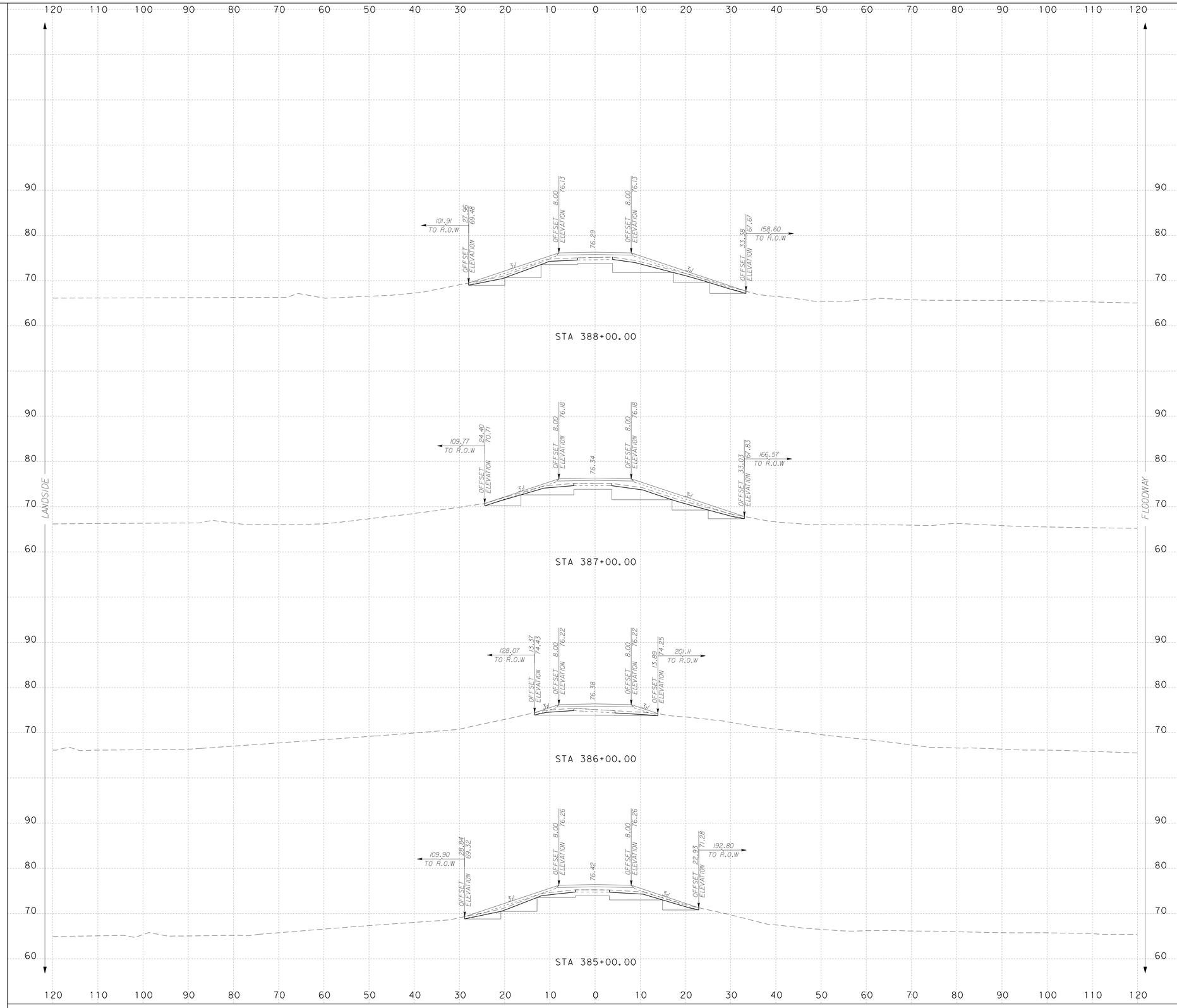

...\Dgn\0450NFN1sLVpxs02.dgn

NOTES:

SURFACE DRAINAGE SHALL BE ESTABLISHED BY THE CONTRACTOR PRIOR TO AND DURING CONSTRUCTION TO PREVENT WATER FROM PONDING WITHIN OR ADJACENT TO THE LEVEE STRUCTURE.

IT IS INTENDED THAT THE FINAL SECTION OF THE PROPOSED LEVEE SHALL FACILITATE RAPID DRAINAGE AWAY FROM THE LEVEE STRUCTURE.

SCALE: H : 1"=10'
V : 1"=10'

S&B INFRASTRUCTURE, LTD.
Engineering Management Technology
S&B Infrastructure, Ltd. Firm Registration Number: 1582

STATE OF TEXAS
PHILLIP J. PAWELEK
82739
REGISTERED PROFESSIONAL ENGINEER

The seal appearing on this document was authorized by PHILLIP J. PAWELEK P.E. 82739, on 6-11, 2009.

Phillip J. Pawelek, P.E.

NORTH FLOODWAY NORTH (NFN1)
PROPOSED CROSS SECTIONS

SHEET 100 OF 112 SHEET

STATE	COUNTY	DRAWN BY: JL	CHECKED BY: JL	
TEXAS	HIDALGO	PROJECT NO.	IBM09T0018	SHEET NO.
REHABILITATION OF NORTH FLOODWAY NORTH AND SOUTH LEVEES (FM 1015 - BASELINE RD.)				10.100

7:00:00 PM
6/10/2009
N:\Project\u0450\U0450515\800+WorkingFiles\Dgn\0450NFN1sLVpxs02.dgn

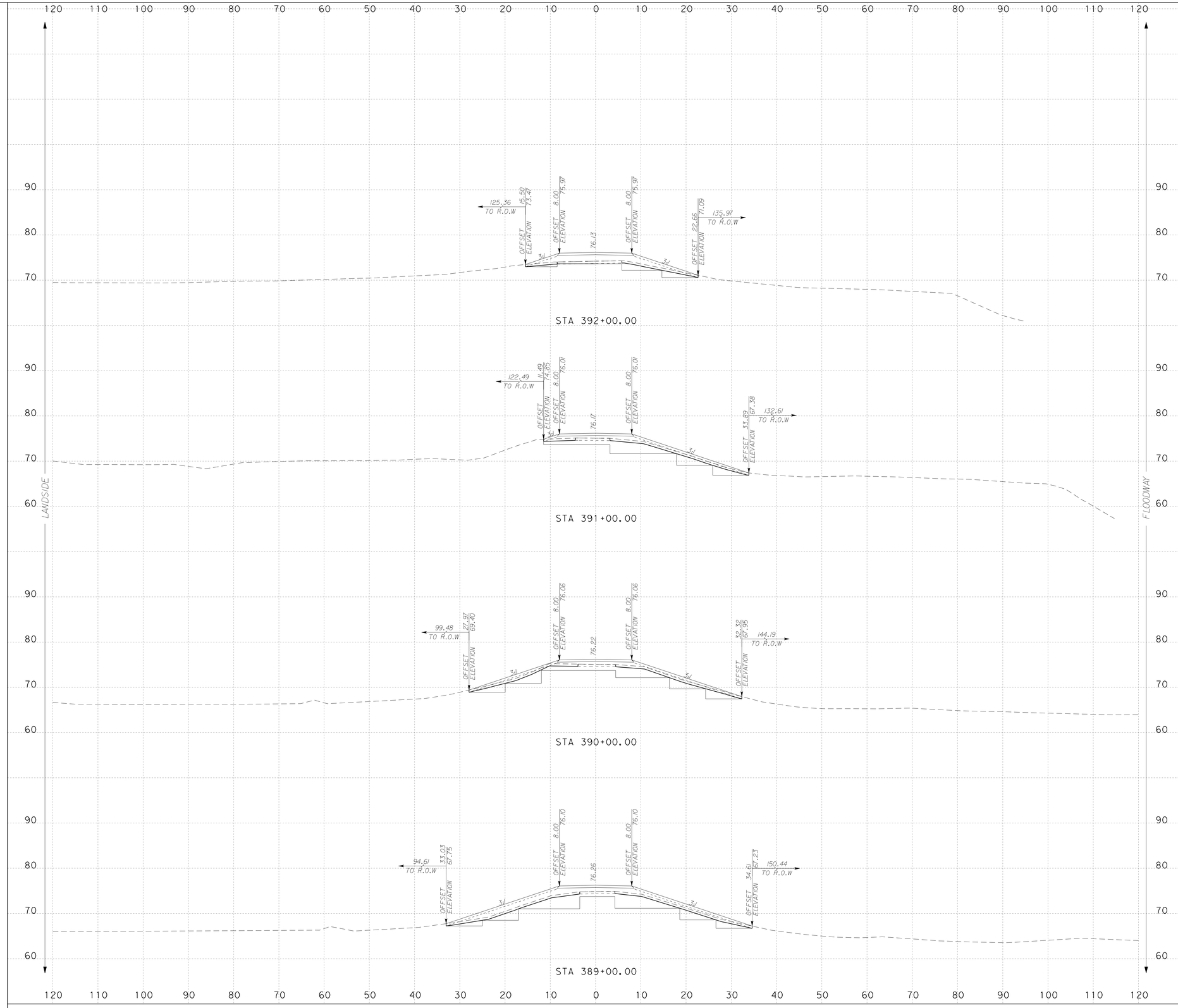

NOTES:

SURFACE DRAINAGE SHALL BE ESTABLISHED BY THE CONTRACTOR PRIOR TO AND DURING CONSTRUCTION TO PREVENT WATER FROM PONDING WITHIN OR ADJACENT TO THE LEVEE STRUCTURE.

IT IS INTENDED THAT THE FINAL SECTION OF THE PROPOSED LEVEE SHALL FACILITATE RAPID DRAINAGE AWAY FROM THE LEVEE STRUCTURE.

SCALE: H : 1"=10'
V : 1"=10'

S&B INFRASTRUCTURE, LTD.
Engineering Management Technology

S&B Infrastructure, Ltd. Firm Registration Number: 1582

STATE OF TEXAS
PHILLIP J. PAWELEK
82739
REGISTERED PROFESSIONAL ENGINEER

The seal appearing on this document was authorized by PHILLIP J. PAWELEK P.E. 82739, on 6-11, 2009

Phillip J. Pawelek, P.E.

NORTH FLOODWAY NORTH (NFN1) PROPOSED CROSS SECTIONS

SHEET 101 OF 112 SHEET

STATE	COUNTY	DRAWN BY: JL	CHECKED BY: JL	
TEXAS	HIDALGO	PROJECT NO. IBM09T0018		SHEET NO.
REHABILITATION OF NORTH FLOODWAY NORTH AND SOUTH LEVEES (FM 1015 - BASELINE RD.)				10.101

7:00:03 PM 6/10/2009
N:\Project\u0450\U045051\800\WorkingFiles\Dgn\0450NFN1sLVpxs02.dgn

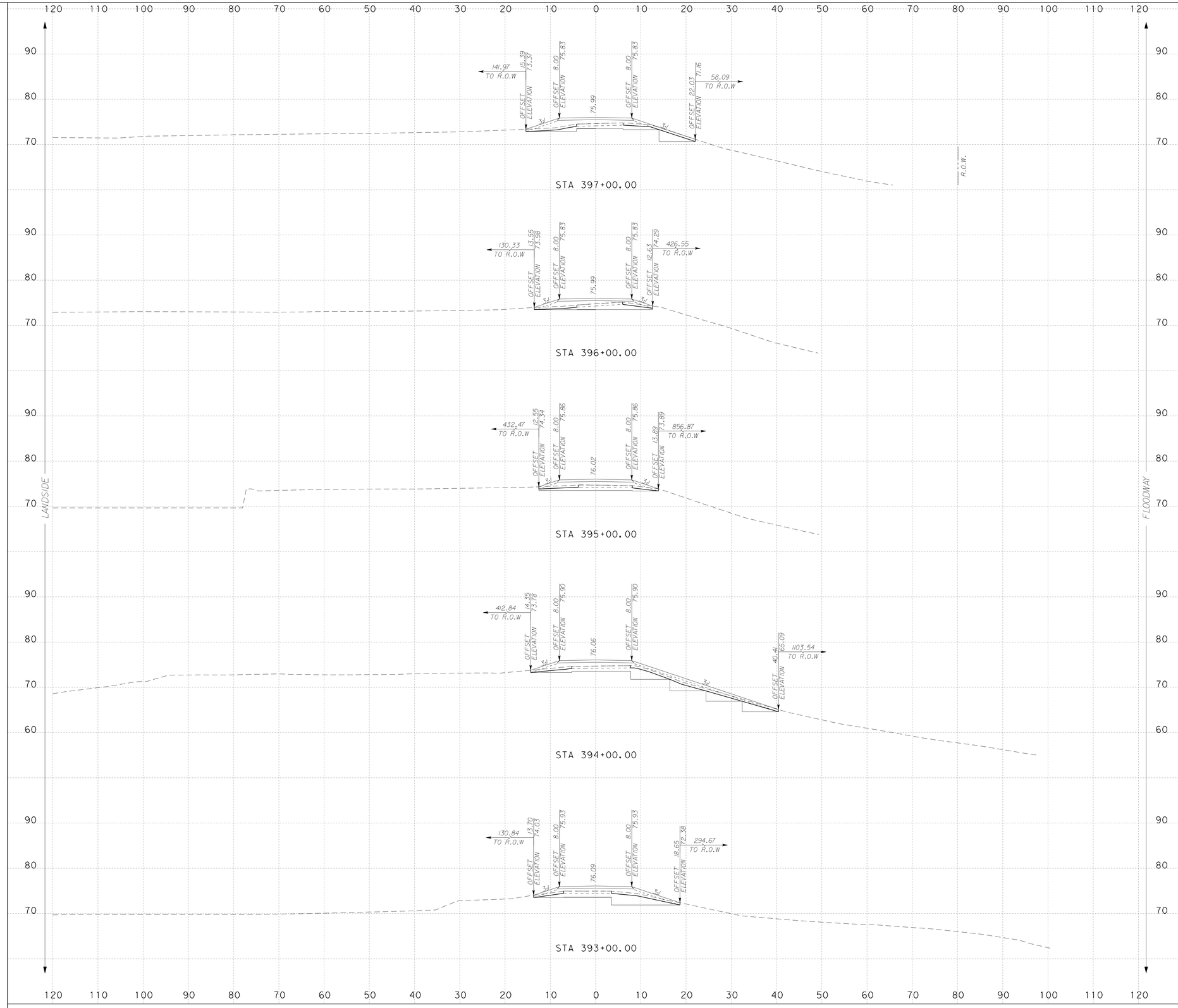

NOTES:

SURFACE DRAINAGE SHALL BE ESTABLISHED BY THE CONTRACTOR PRIOR TO AND DURING CONSTRUCTION TO PREVENT WATER FROM PONDING WITHIN OR ADJACENT TO THE LEVEE STRUCTURE.

IT IS INTENDED THAT THE FINAL SECTION OF THE PROPOSED LEVEE SHALL FACILITATE RAPID DRAINAGE AWAY FROM THE LEVEE STRUCTURE.

SCALE: H : 1"=10'
V : 1"=10'

S&B INFRASTRUCTURE, LTD.
Engineering Management Technology

S&B Infrastructure, Ltd. Firm Registration Number: 1582

STATE OF TEXAS
PHILLIP J. PAWELEK
82739
REGISTERED PROFESSIONAL ENGINEER

The seal appearing on this document was authorized by PHILLIP J. PAWELEK P.E. 82739, on 6-11, 2009.

Phillip J. Pawelek, P.E.

NORTH FLOODWAY NORTH (NFN1)
PROPOSED CROSS SECTIONS

SHEET 102 OF 112 SHEET

STATE	COUNTY	DRAWN BY: JL	CHECKED BY: JL	
TEXAS	HIDALGO	PROJECT NO. IBM09T0018		SHEET NO.
REHABILITATION OF NORTH FLOODWAY NORTH AND SOUTH LEVEES (FM 1015 - BASELINE RD.)				10.102

7:00:06 PM
6/10/2009
N:\Project\u0450\U0450515\800+WorkingFiles\Dgn\0450NFN1sLVpxs02.dgn

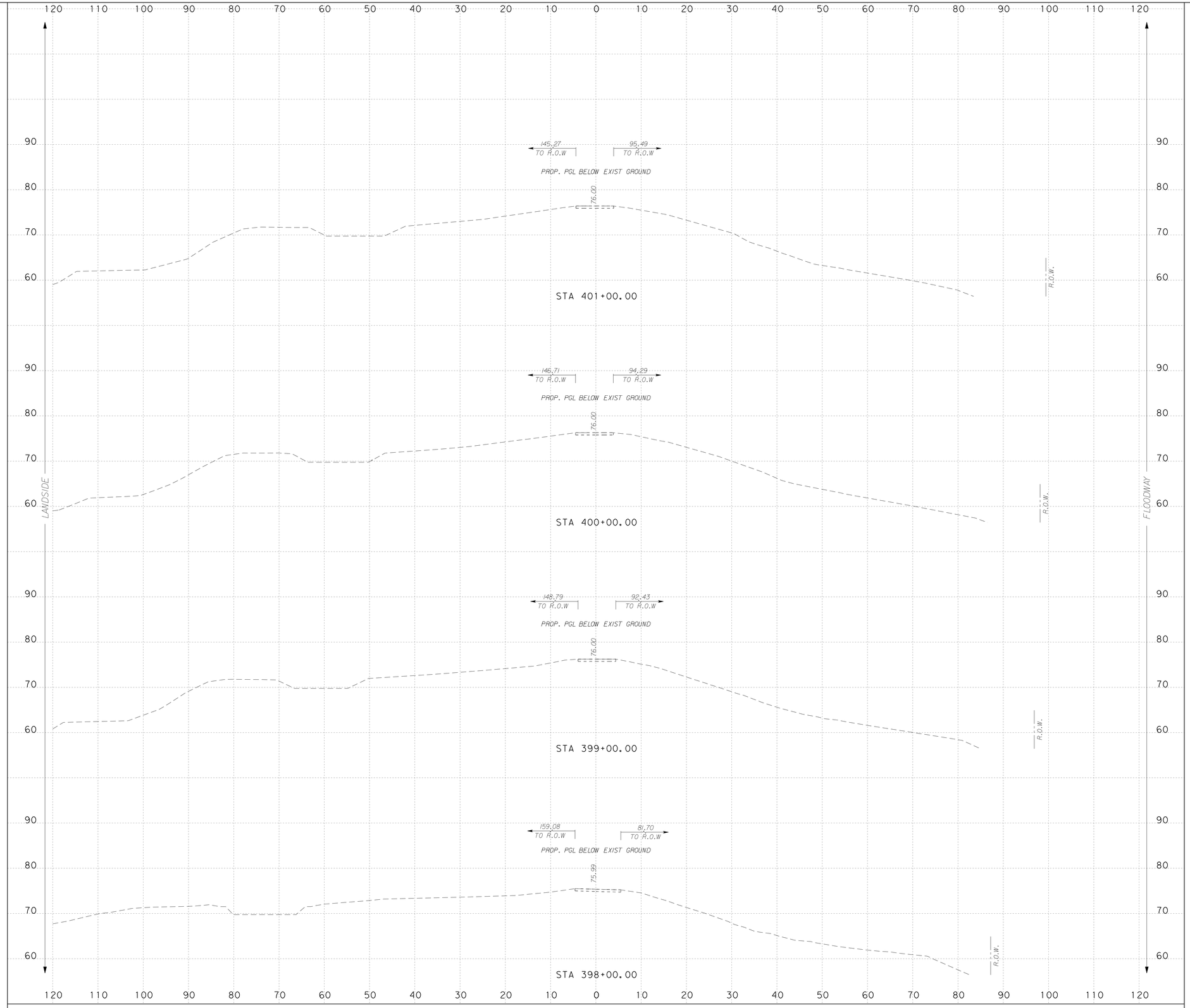

NOTES:

SURFACE DRAINAGE SHALL BE ESTABLISHED BY THE CONTRACTOR PRIOR TO AND DURING CONSTRUCTION TO PREVENT WATER FROM PONDING WITHIN OR ADJACENT TO THE LEVEE STRUCTURE.

IT IS INTENDED THAT THE FINAL SECTION OF THE PROPOSED LEVEE SHALL FACILITATE RAPID DRAINAGE AWAY FROM THE LEVEE STRUCTURE.

SCALE: H : 1"=10'
V : 1"=10'

INTERNATIONAL BOUNDARY AND WATER COMMISSION
COMISION INTERNACIONAL DE LIMITES Y AGUAS

S&B INFRASTRUCTURE, LTD.
Engineering Management Technology

S&B Infrastructure, Ltd. Firm Registration Number: 1582

STATE OF TEXAS
PHILLIP J. PAWELEK
82739
REGISTERED PROFESSIONAL ENGINEER

The seal appearing on this document was authorized by PHILLIP J. PAWELEK P.E. 82739, on 6-11, 2009.

Phillip J. Pawelek, P.E.

NORTH FLOODWAY NORTH (NFN1) PROPOSED CROSS SECTIONS

SHEET 103 OF 112 SHEET

STATE	COUNTY	DRAWN BY: JL	CHECKED BY: JL	
TEXAS	HIDALGO	PROJECT NO. IBM09T0018		SHEET NO.
REHABILITATION OF NORTH FLOODWAY NORTH AND SOUTH LEVEES (FM 1015 - BASELINE RD.)				10.103

7:00:09 PM 6/10/2009 N:\Project\0450\0450515\800\WorkingFiles\Dgn\0450NFN1sLVpxs02.dgn

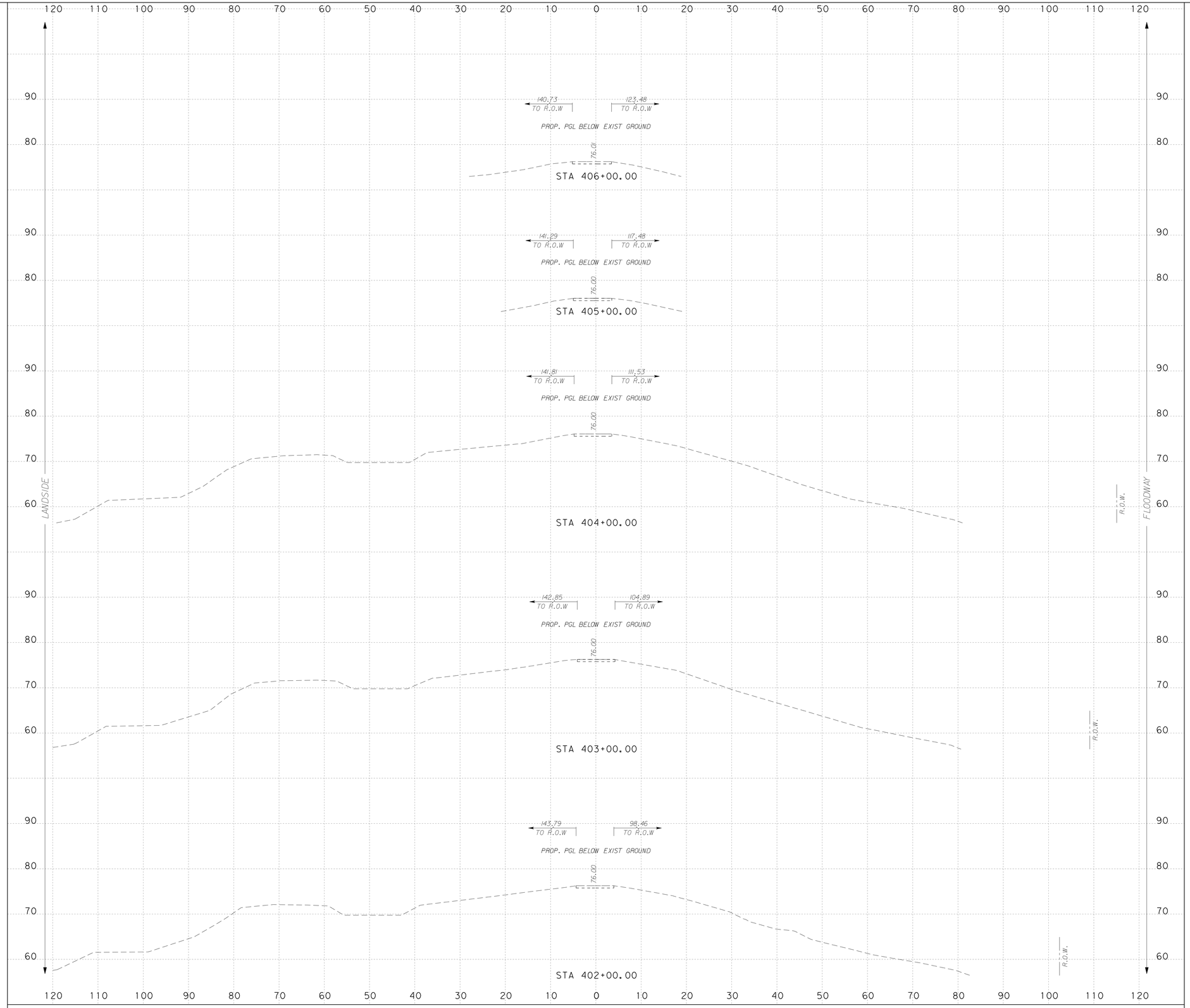

NOTES:

SURFACE DRAINAGE SHALL BE ESTABLISHED BY THE CONTRACTOR PRIOR TO AND DURING CONSTRUCTION TO PREVENT WATER FROM PONDING WITHIN OR ADJACENT TO THE LEVEE STRUCTURE.

IT IS INTENDED THAT THE FINAL SECTION OF THE PROPOSED LEVEE SHALL FACILITATE RAPID DRAINAGE AWAY FROM THE LEVEE STRUCTURE.

SCALE: H : 1"=10'
V : 1"=10'

INTERNATIONAL BOUNDARY AND WATER COMMISSION
COMISION INTERNACIONAL DE LIMITES Y AGUAS

S&B INFRASTRUCTURE, LTD.
Engineering Management Technology

S&B Infrastructure, Ltd. Firm Registration Number: 1582

STATE OF TEXAS
PHILLIP J. PAWELEK
82739
REGISTERED PROFESSIONAL ENGINEER

The seal appearing on this document was authorized by PHILLIP J. PAWELEK P.E. 82739, on 6-11, 2009.

Phillip J. Pawelek, P.E.

NORTH FLOODWAY NORTH (NFN1) PROPOSED CROSS SECTIONS

SHEET 104 OF 112 SHEET

STATE	COUNTY	DRAWN BY: JL	CHECKED BY: JL	
TEXAS	HIDALGO	PROJECT NO. IBM09T0018		SHEET NO.
REHABILITATION OF NORTH FLOODWAY NORTH AND SOUTH LEVEES (FM 1015 - BASELINE RD.)				10.104

N:\Project\0450\0450515\800-WorkingFiles\Dgn\0450NFN1sLVpxs02.dgn
6/10/2009 7:00:12 PM

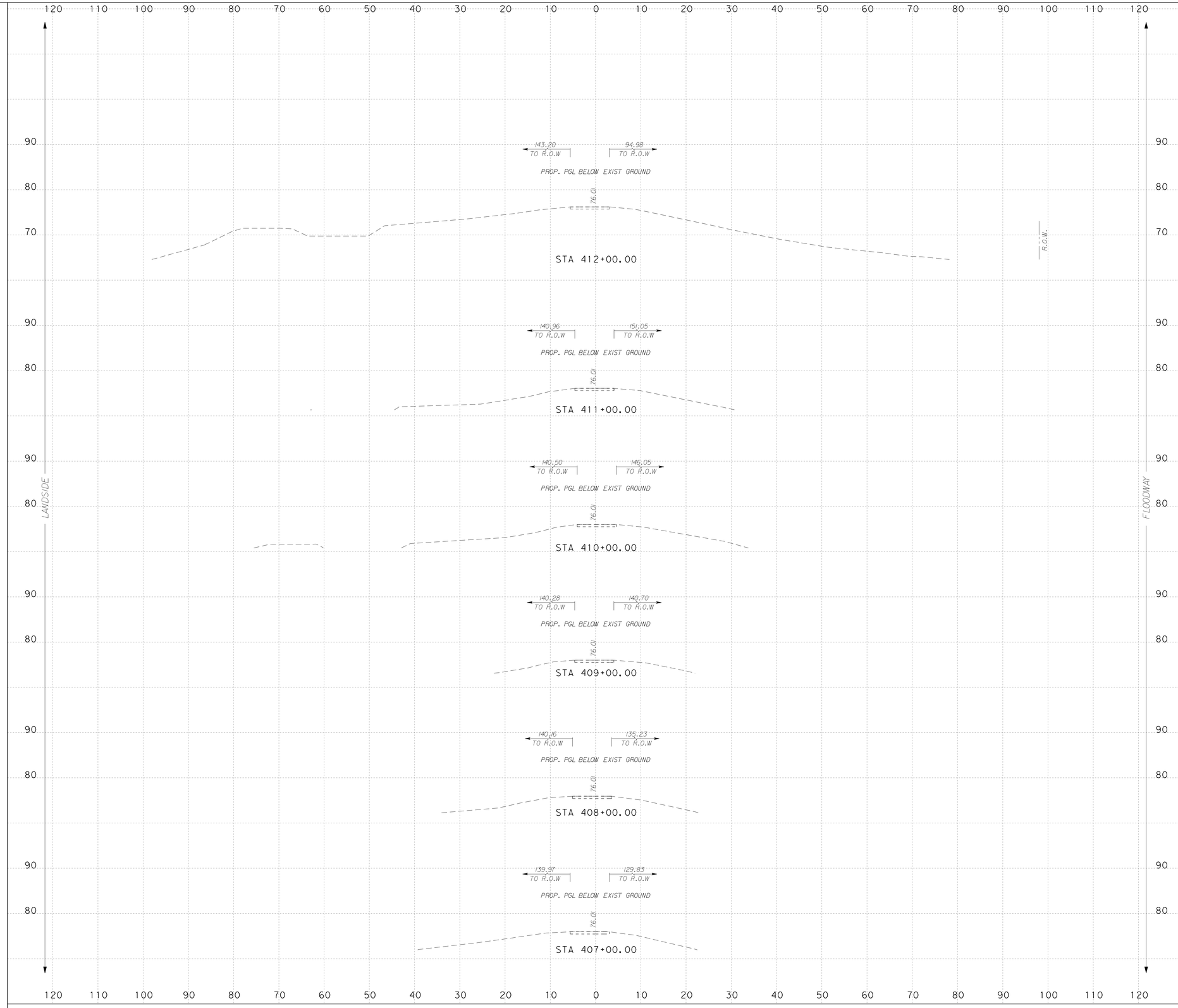

...\Dgn\0450NFN1sLVpxs02.dgn

NOTES:

SURFACE DRAINAGE SHALL BE ESTABLISHED BY THE CONTRACTOR PRIOR TO AND DURING CONSTRUCTION TO PREVENT WATER FROM PONDING WITHIN OR ADJACENT TO THE LEVEE STRUCTURE.

IT IS INTENDED THAT THE FINAL SECTION OF THE PROPOSED LEVEE SHALL FACILITATE RAPID DRAINAGE AWAY FROM THE LEVEE STRUCTURE.

SCALE: H : 1"=10'
V : 1"=10'

S&B INFRASTRUCTURE, LTD.
Engineering Management Technology

S&B Infrastructure, Ltd. Firm Registration Number: 1582

STATE OF TEXAS
PHILLIP J. PAWELEK
82739
REGISTERED PROFESSIONAL ENGINEER

The seal appearing on this document was authorized by PHILLIP J. PAWELEK P.E. 82739, on 6-11, 2009.

Phillip J. Pawelek, P.E.

NORTH FLOODWAY NORTH (NFN1)
PROPOSED CROSS SECTIONS

SHEET 105 OF 112 SHEET

STATE	COUNTY	DRAWN BY: JL	CHECKED BY: JL	
TEXAS	HIDALGO	PROJECT NO. IBM09T0018		SHEET NO.
REHABILITATION OF NORTH FLOODWAY NORTH AND SOUTH LEVEES (FM 1015 - BASELINE RD.)				10.105

7:00:15 PM
6/10/2009
N:\Project\u0450\U0450515\800*WorkingFiles\Dgn\0450NFN1sLVpxs02.dgn

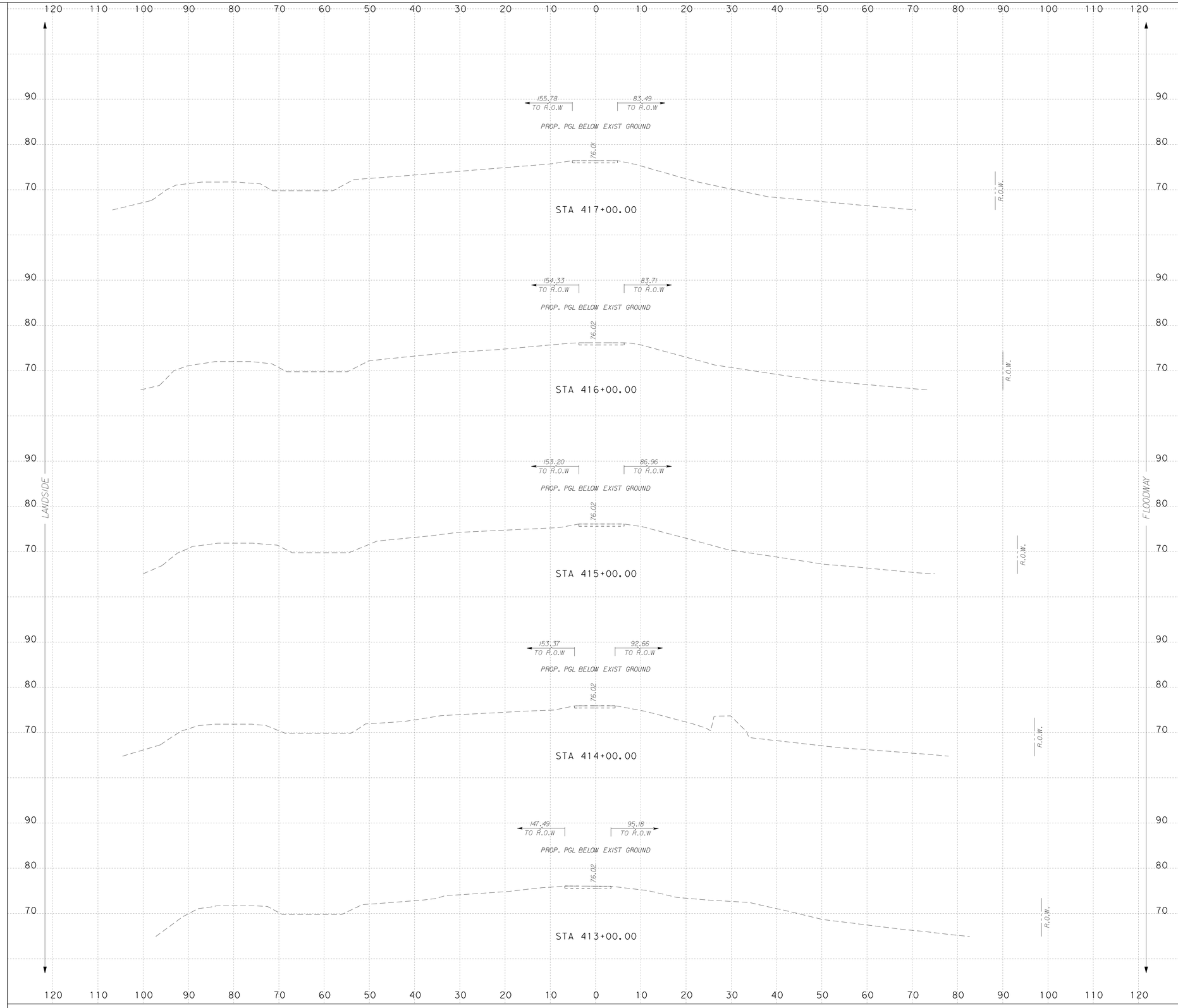

...\Dgn\0450NFN1sLVpxs02.dgn

NOTES:

SURFACE DRAINAGE SHALL BE ESTABLISHED BY THE CONTRACTOR PRIOR TO AND DURING CONSTRUCTION TO PREVENT WATER FROM PONDING WITHIN OR ADJACENT TO THE LEVEE STRUCTURE.

IT IS INTENDED THAT THE FINAL SECTION OF THE PROPOSED LEVEE SHALL FACILITATE RAPID DRAINAGE AWAY FROM THE LEVEE STRUCTURE.

SCALE: H : 1"=10'
V : 1"=10'

S&B INFRASTRUCTURE, LTD.
Engineering Management Technology

S&B Infrastructure, Ltd. Firm Registration Number: 1582

STATE OF TEXAS
PHILLIP J. PAWELEK
82739
REGISTERED PROFESSIONAL ENGINEER

The seal appearing on this document was authorized by PHILLIP J. PAWELEK P.E. 82739, on 6-11, 2009.

Phillip J. Pawelek, P.E.

NORTH FLOODWAY NORTH (NFN1)
PROPOSED CROSS SECTIONS

SHEET 106 OF 112 SHEET

STATE	COUNTY	DRAWN BY: JL	CHECKED BY: JL	
TEXAS	HIDALGO	PROJECT NO. IBM09T0018		SHEET NO.
REHABILITATION OF NORTH FLOODWAY NORTH AND SOUTH LEVEES (FM 1015 - BASELINE RD.)				10.106

7:00:17 PM
6/10/2009
N:\Project\u0450\U0450515\800+WorkingFiles\Dgn\0450NFN1sLVpxs02.dgn

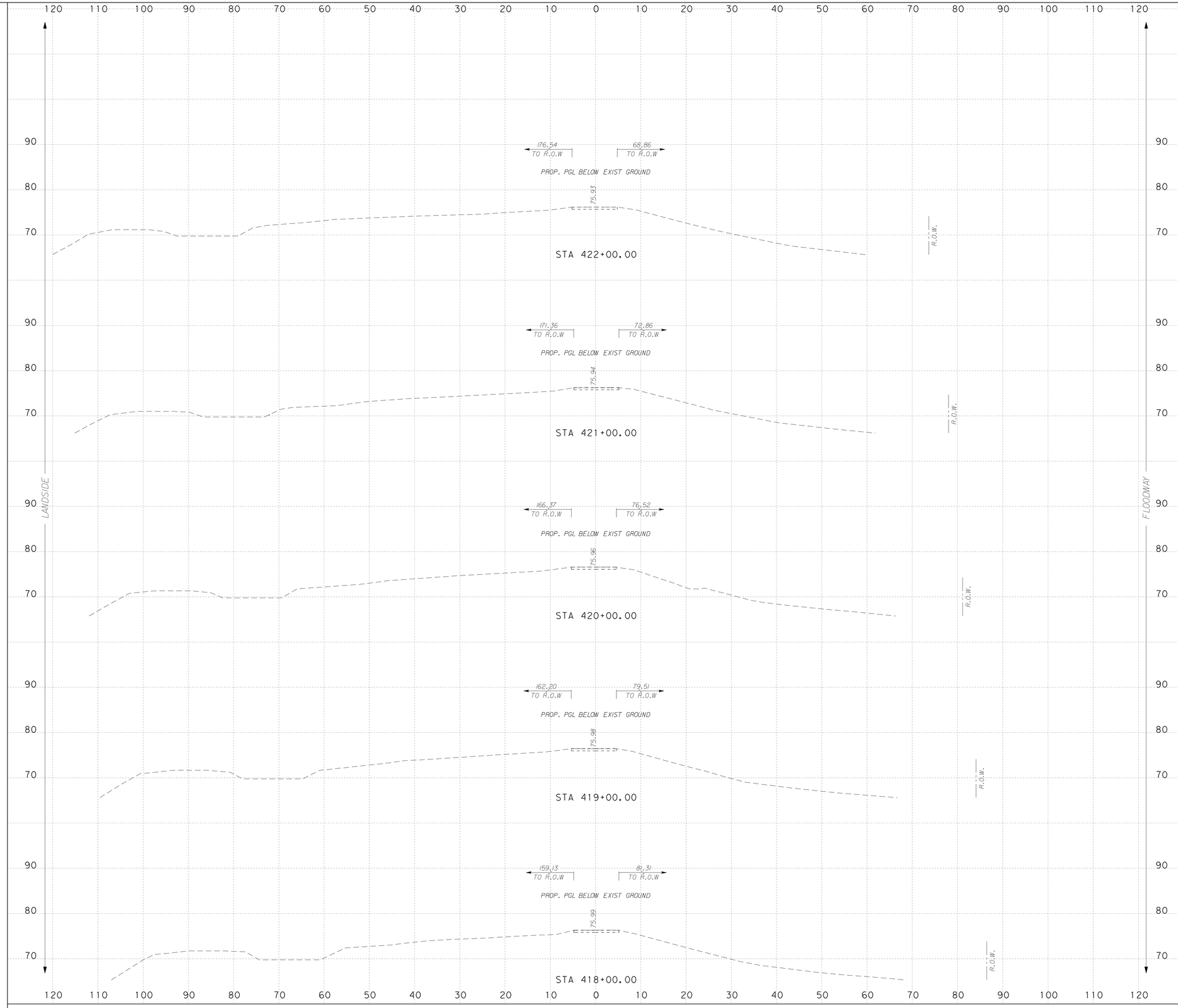

NOTES:

SURFACE DRAINAGE SHALL BE ESTABLISHED BY THE CONTRACTOR PRIOR TO AND DURING CONSTRUCTION TO PREVENT WATER FROM PONDING WITHIN OR ADJACENT TO THE LEVEE STRUCTURE.

IT IS INTENDED THAT THE FINAL SECTION OF THE PROPOSED LEVEE SHALL FACILITATE RAPID DRAINAGE AWAY FROM THE LEVEE STRUCTURE.

SCALE: H : 1"=10'
V : 1"=10'

INTERNATIONAL BOUNDARY AND WATER COMMISSION
COMISION INTERNACIONAL DE LIMITES Y AGUAS

S&B INFRASTRUCTURE, LTD.
Engineering Management Technology

S&B Infrastructure, Ltd. Firm Registration Number: 1582

STATE OF TEXAS
PHILLIP J. PAWELEK
82739
REGISTERED PROFESSIONAL ENGINEER

The seal appearing on this document was authorized by PHILLIP J. PAWELEK P.E. 82739, on 6-11, 2009

Phillip J. Pawelek, P.E.

NORTH FLOODWAY NORTH (NFN1)
PROPOSED CROSS SECTIONS

SHEET 107 OF 112 SHEET

STATE	COUNTY	DRAWN BY: JL	CHECKED BY: JL	
TEXAS	HIDALGO	PROJECT NO. IBM09T0018		SHEET NO.
REHABILITATION OF NORTH FLOODWAY NORTH AND SOUTH LEVEES (FM 1015 - BASELINE RD.)				10.107

7:00:20 PM 6/10/2009 N:\Project\u0450\U045051\800\WorkingFiles\Dgn\0450NFN1sLVpxs02.dgn

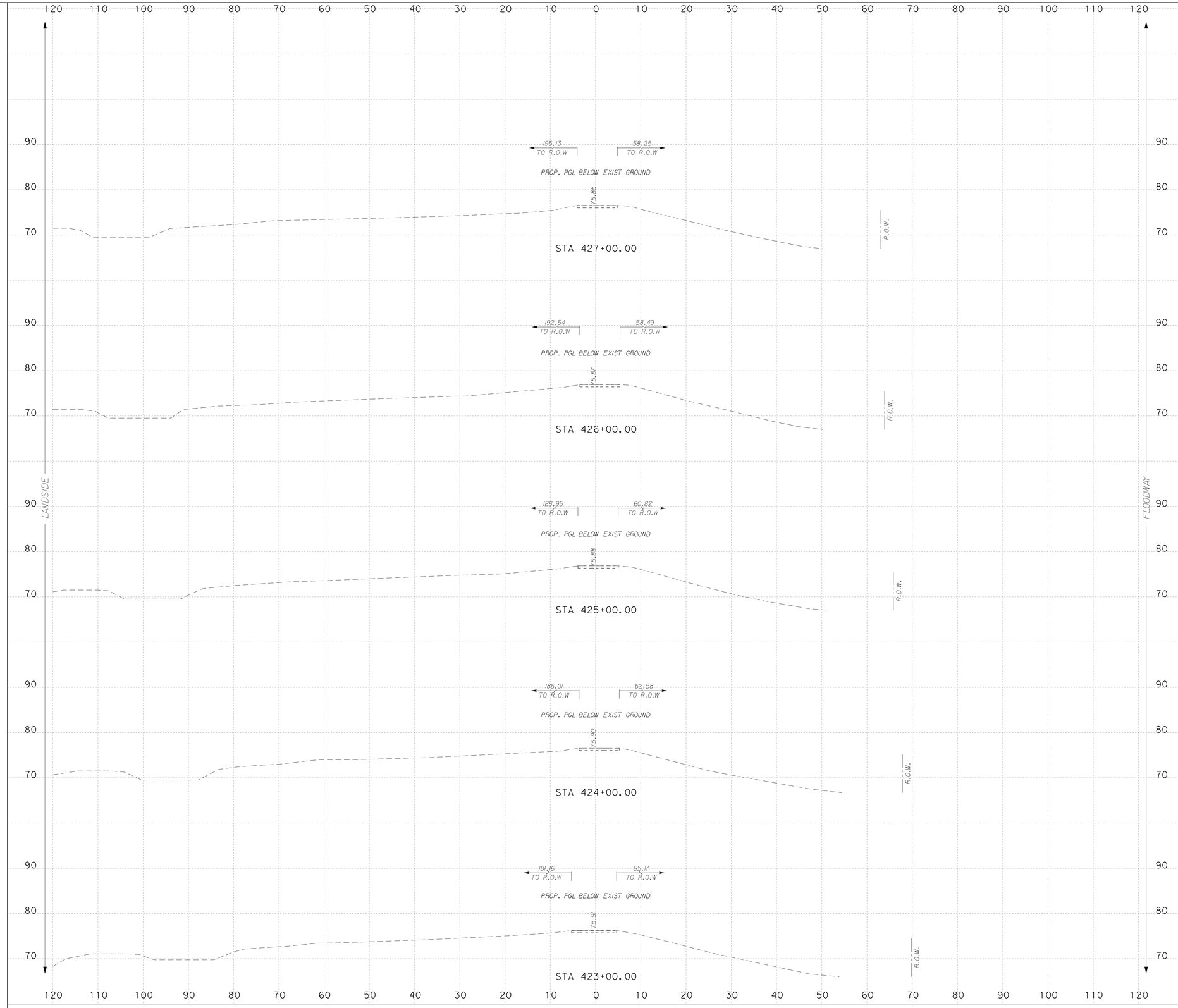

...\Dgn\0450NFN1sLVpxs02.dgn

NOTES:

SURFACE DRAINAGE SHALL BE ESTABLISHED BY THE CONTRACTOR PRIOR TO AND DURING CONSTRUCTION TO PREVENT WATER FROM PONDING WITHIN OR ADJACENT TO THE LEVEE STRUCTURE.

IT IS INTENDED THAT THE FINAL SECTION OF THE PROPOSED LEVEE SHALL FACILITATE RAPID DRAINAGE AWAY FROM THE LEVEE STRUCTURE.

SCALE: H : 1"=10'
V : 1"=10'

S&B INFRASTRUCTURE, LTD.
Engineering Management Technology

S&B Infrastructure, Ltd. Firm Registration Number: 1582

STATE OF TEXAS
PHILLIP J. PAWELEK
82739
REGISTERED PROFESSIONAL ENGINEER

The seal appearing on this document was authorized by PHILLIP J. PAWELEK P.E. 82739, on 6-11, 2009.

Phillip J. Pawelek, P.E.

NORTH FLOODWAY NORTH (NFN1)
PROPOSED CROSS SECTIONS

SHEET 108 OF 112 SHEET

STATE	COUNTY	DRAWN BY: JL	CHECKED BY: JL	
TEXAS	HIDALGO	PROJECT NO. IBM09T0018		SHEET NO.
REHABILITATION OF NORTH FLOODWAY NORTH AND SOUTH LEVEES (FM 1015 - BASELINE RD.)				10.108

7:00:23 PM
6/10/2009
N:\Project\u0450\U0450515\800\WorkingFiles\Dgn\0450NFN1sLVpxs02.dgn

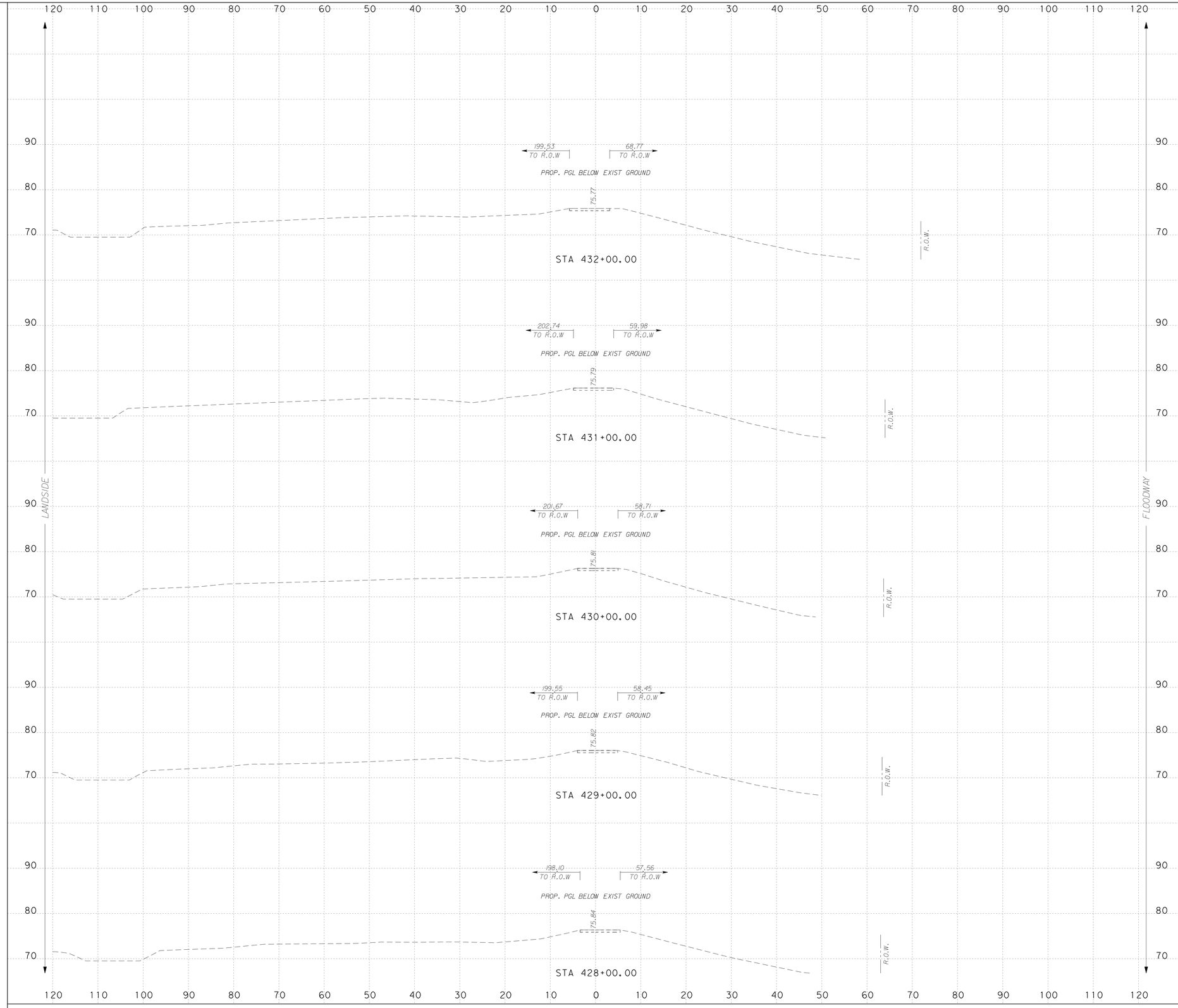

...\Dgn\0450NFN1sLVpxs02.dgn

NOTES:

SURFACE DRAINAGE SHALL BE ESTABLISHED BY THE CONTRACTOR PRIOR TO AND DURING CONSTRUCTION TO PREVENT WATER FROM PONDING WITHIN OR ADJACENT TO THE LEVEE STRUCTURE.

IT IS INTENDED THAT THE FINAL SECTION OF THE PROPOSED LEVEE SHALL FACILITATE RAPID DRAINAGE AWAY FROM THE LEVEE STRUCTURE.

SCALE: H : 1"=10'
V : 1"=10'

S&B INFRASTRUCTURE, LTD.
Engineering Management Technology
S&B Infrastructure, Ltd. Firm Registration Number: 1582

STATE OF TEXAS
PHILLIP J. PAWELEK
82739
REGISTERED PROFESSIONAL ENGINEER

The seal appearing on this document was authorized by PHILLIP J. PAWELEK P.E. 82739, on 6-11, 2009.

Phillip J. Pawelek, P.E.

NORTH FLOODWAY NORTH (NFN1)
PROPOSED CROSS SECTIONS

SHEET 109 OF 112 SHEET

STATE	COUNTY	DRAWN BY: JL	CHECKED BY: JL	
TEXAS	HIDALGO	PROJECT NO. IBM09T0018		SHEET NO.
REHABILITATION OF NORTH FLOODWAY NORTH AND SOUTH LEVEES (FM 1015 - BASELINE RD.)				10.109

7:00:26 PM
6/10/2009
N:\Project\u0450\U0450515\800*WorkingFiles\Dgn\0450NFN1sLVpxs02.dgn

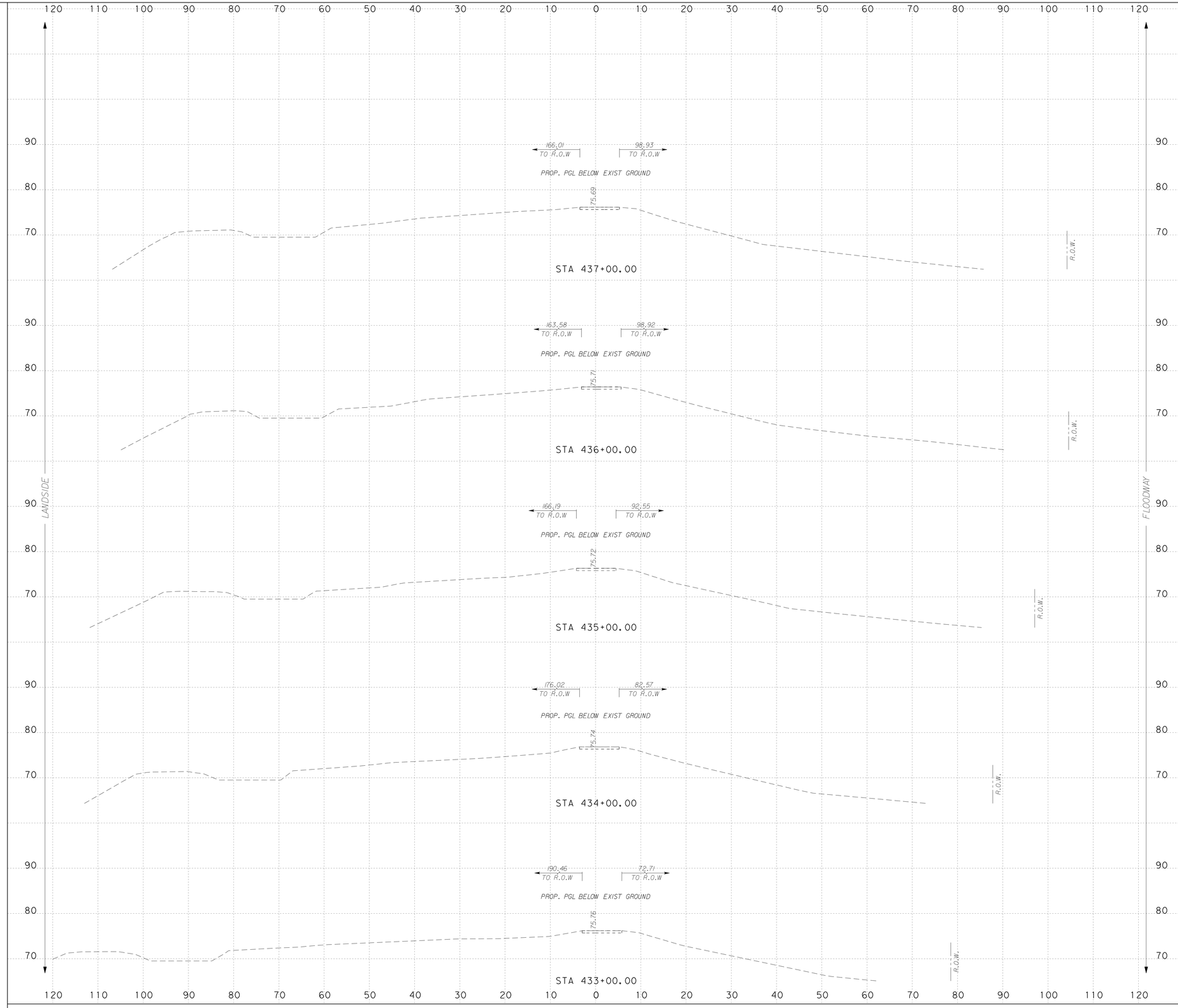

...\Dgn\0450NFN1sLVpxs02.dgn

NOTES:

SURFACE DRAINAGE SHALL BE ESTABLISHED BY THE CONTRACTOR PRIOR TO AND DURING CONSTRUCTION TO PREVENT WATER FROM PONDING WITHIN OR ADJACENT TO THE LEVEE STRUCTURE.

IT IS INTENDED THAT THE FINAL SECTION OF THE PROPOSED LEVEE SHALL FACILITATE RAPID DRAINAGE AWAY FROM THE LEVEE STRUCTURE.

SCALE: H : 1"=10'
V : 1"=10'

S&B INFRASTRUCTURE, LTD.
Engineering Management Technology

S&B Infrastructure, Ltd. Firm Registration Number: 1582

STATE OF TEXAS
PHILLIP J. PAWELEK
82739
REGISTERED PROFESSIONAL ENGINEER

The seal appearing on this document was authorized by PHILLIP J. PAWELEK P.E. 82739, on 6-11, 2009.

Phillip J. Pawelek, P.E.

NORTH FLOODWAY NORTH (NFN1)
PROPOSED CROSS SECTIONS

SHEET 110 OF 112 SHEET

STATE	COUNTY	DRAWN BY: JL	CHECKED BY: JL	
TEXAS	HIDALGO	PROJECT NO. IBM09T0018		SHEET NO.
REHABILITATION OF NORTH FLOODWAY NORTH AND SOUTH LEVEES (FM 1015 - BASELINE RD.)				10.110

7:00:29 PM
6/10/2009
N:\Project\u0450\U0450515\800*WorkingFiles\Dgn\0450NFN1sLVpxs02.dgn

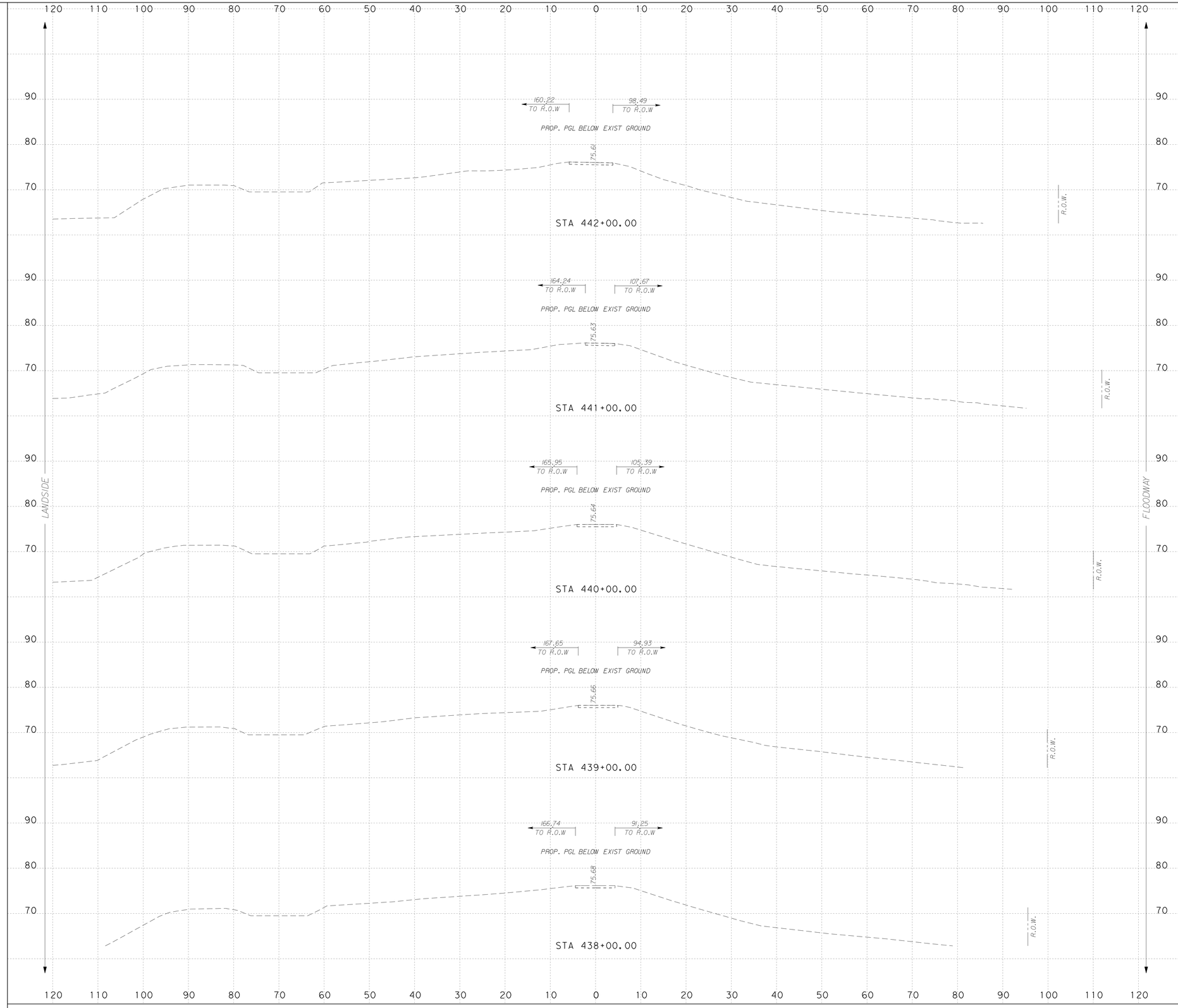

...\Dgn\0450NFN1sLVpxs02.dgn

NOTES:

SURFACE DRAINAGE SHALL BE ESTABLISHED BY THE CONTRACTOR PRIOR TO AND DURING CONSTRUCTION TO PREVENT WATER FROM PONDING WITHIN OR ADJACENT TO THE LEVEE STRUCTURE.

IT IS INTENDED THAT THE FINAL SECTION OF THE PROPOSED LEVEE SHALL FACILITATE RAPID DRAINAGE AWAY FROM THE LEVEE STRUCTURE.

SCALE: H : 1"=10'
V : 1"=10'

S&B INFRASTRUCTURE, LTD.
Engineering Management Technology
S&B Infrastructure, Ltd. Firm Registration Number: 1582

STATE OF TEXAS
PHILLIP J. PAWELEK
82739
REGISTERED PROFESSIONAL ENGINEER

The seal appearing on this document was authorized by PHILLIP J. PAWELEK P.E. 82739, on 6-11, 2009.

Phillip J. Pawelek, P.E.

NORTH FLOODWAY NORTH (NFN1)
PROPOSED CROSS SECTIONS

SHEET 111 OF 112 SHEET

STATE	COUNTY	DRAWN BY: JL	CHECKED BY: JL	
TEXAS	HIDALGO	PROJECT NO. IBM09T0018		SHEET NO.
REHABILITATION OF NORTH FLOODWAY NORTH AND SOUTH LEVEES (FM 1015 - BASELINE RD.)				10.111

7:00:32 PM
6/10/2009
N:\Project\u0450\U0450515\800+WorkingFiles\Dgn\0450NFN1sLVpxs02.dgn

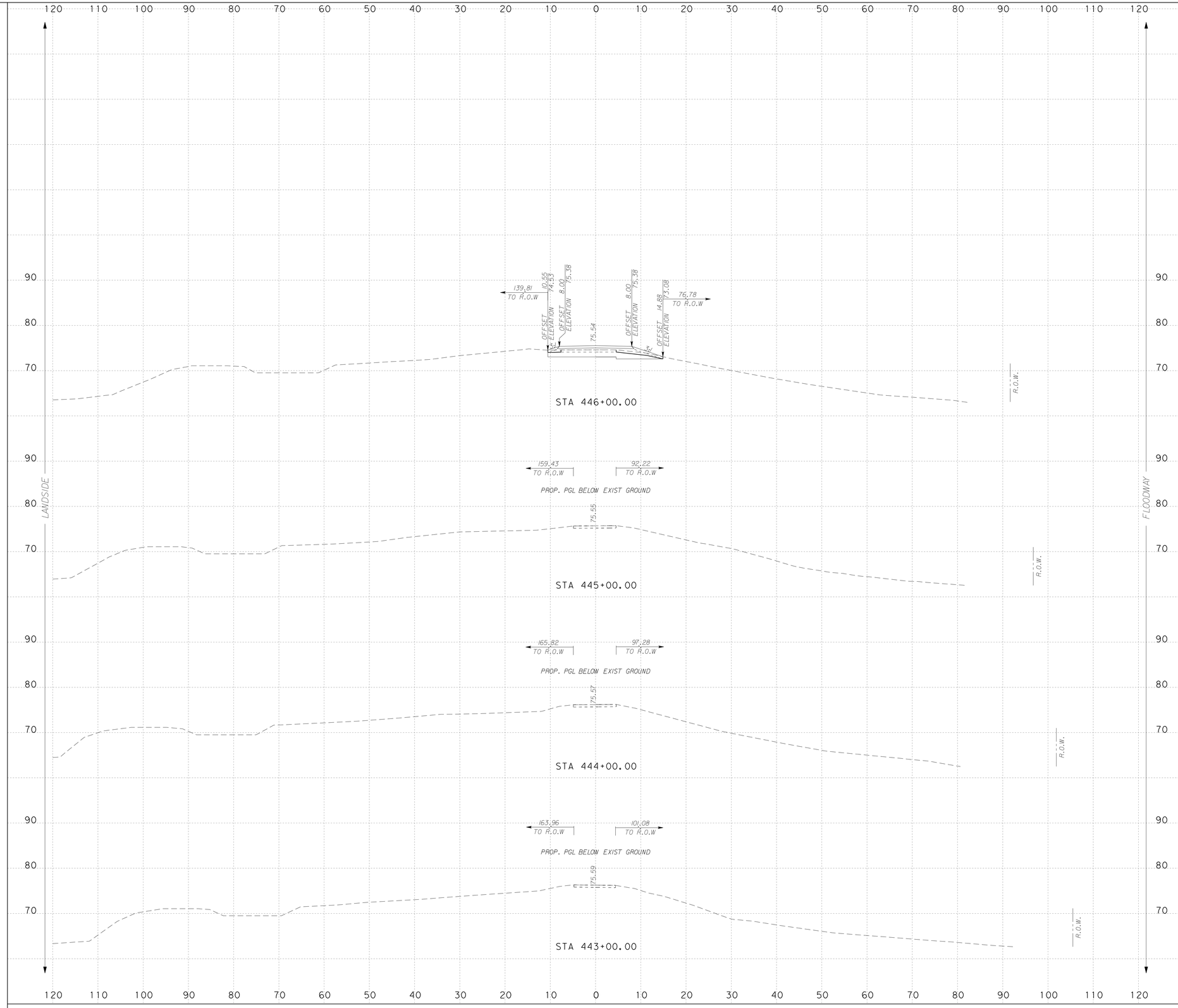

NOTES:

SURFACE DRAINAGE SHALL BE ESTABLISHED BY THE CONTRACTOR PRIOR TO AND DURING CONSTRUCTION TO PREVENT WATER FROM PONDING WITHIN OR ADJACENT TO THE LEVEE STRUCTURE.

IT IS INTENDED THAT THE FINAL SECTION OF THE PROPOSED LEVEE SHALL FACILITATE RAPID DRAINAGE AWAY FROM THE LEVEE STRUCTURE.

SCALE: H : 1"=10'
V : 1"=10'

S&B INFRASTRUCTURE, LTD.
Engineering Management Technology
S&B Infrastructure, Ltd. Firm Registration Number: 1582

STATE OF TEXAS
PHILLIP J. PAWELEK
82739
REGISTERED PROFESSIONAL ENGINEER

The seal appearing on this document was authorized by PHILLIP J. PAWELEK P.E. 82739, on 6-11, 2009

Phillip J. Pawelek, P.E.

NORTH FLOODWAY NORTH (NFN1) PROPOSED CROSS SECTIONS

SHEET 112 OF 112 SHEET

STATE	COUNTY	DRAWN BY: JL	CHECKED BY: JL	
TEXAS	HIDALGO	PROJECT NO. IBM09T0018		SHEET NO.
REHABILITATION OF NORTH FLOODWAY NORTH AND SOUTH LEVEES (FM 1015 - BASELINE RD.)				10.112

7:01:35 PM 6/10/2009 N:\Project\u0450\U045051S\800\WorkingFiles\Dgn\0450NFN1sLVpxs02.dgn

...\Dgn\0450NFS1sLVpxs02.dgn

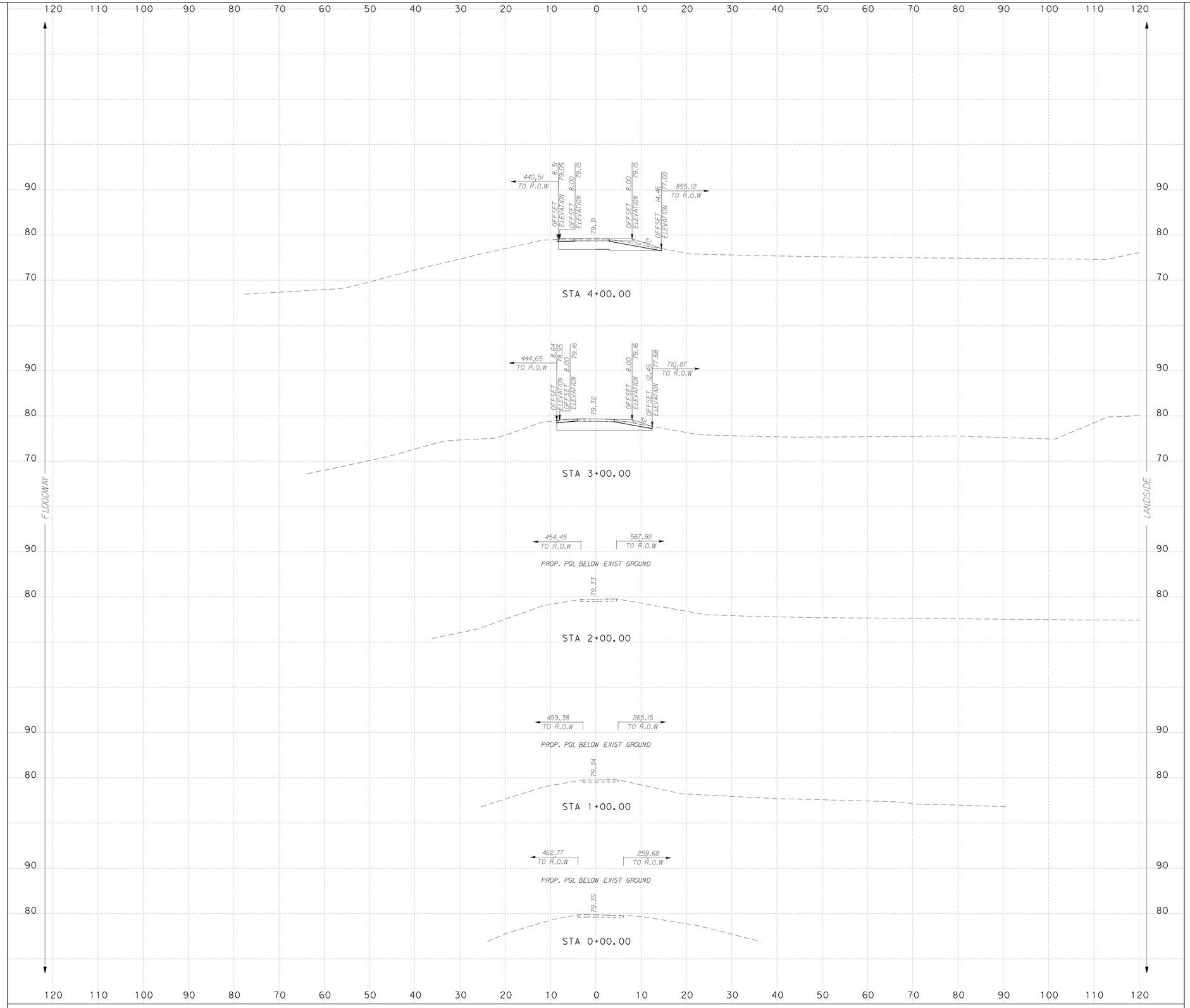

NOTES:

SURFACE DRAINAGE SHALL BE ESTABLISHED BY THE CONTRACTOR PRIOR TO AND DURING CONSTRUCTION TO PREVENT WATER FROM PONDING WITHIN OR ADJACENT TO THE LEVEE STRUCTURE.

IT IS INTENDED THAT THE FINAL SECTION OF THE PROPOSED LEVEE SHALL FACILITATE RAPID DRAINAGE AWAY FROM THE LEVEE STRUCTURE.

SCALE: H : 1"=10'
V : 1"=10'

S&B INFRASTRUCTURE, LTD.
Engineering Management Technology

S&B Infrastructure, Ltd. Firm Registration Number: 1582

STATE OF TEXAS
PHILLIP J. PAWELEK
82739
REGISTERED PROFESSIONAL ENGINEER

The seal appearing on this document was authorized by PHILLIP J. PAWELEK P.E. 82739, on 6-11, 2009

Phillip J. Pawelek, P.E.

NORTH FLOODWAY SOUTH (NFS1)
PROPOSED CROSS SECTIONS

SHEET 1 OF 60 SHEET

STATE	COUNTY	DRAWN BY: JL	CHECKED BY: JL	
TEXAS	HIDALGO	PROJECT NO. IBM09T0018		SHEET NO.
REHABILITATION OF NORTH FLOODWAY NORTH AND SOUTH LEVEES (FM 1015 - BASELINE RD.)				10.113

N:\Project\u0450\U045051\8000\WorkingFiles\Dgn\0450NFS1sLVpxs02.dgn

6/10/2009 7:06:09 PM

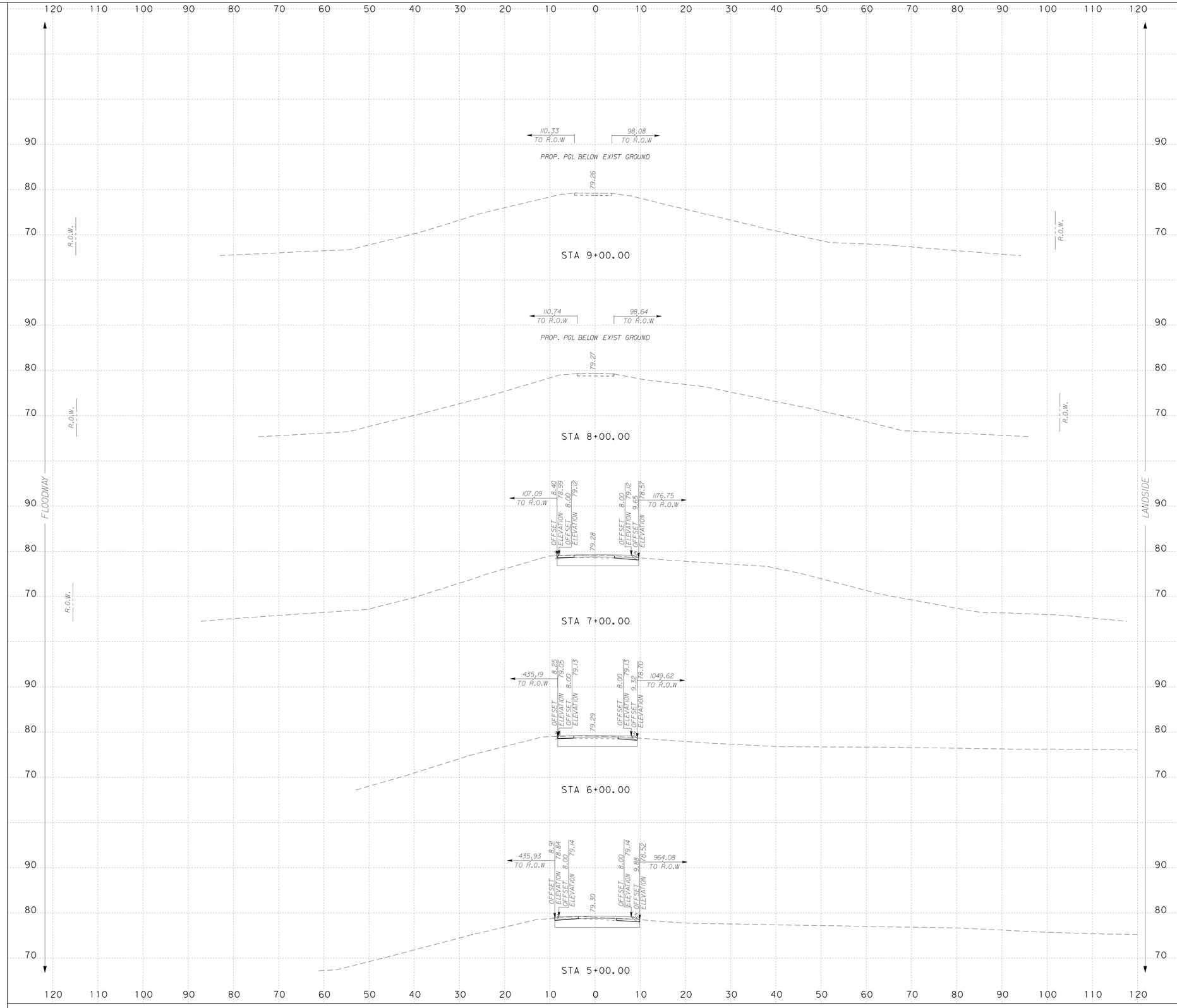

NOTES:

SURFACE DRAINAGE SHALL BE ESTABLISHED BY THE CONTRACTOR PRIOR TO AND DURING CONSTRUCTION TO PREVENT WATER FROM PONDING WITHIN OR ADJACENT TO THE LEVEE STRUCTURE.

IT IS INTENDED THAT THE FINAL SECTION OF THE PROPOSED LEVEE SHALL FACILITATE RAPID DRAINAGE AWAY FROM THE LEVEE STRUCTURE.

SCALE: H : 1"=10'
V : 1"=10'

INTERNATIONAL BOUNDARY AND WATER COMMISSION
COMISION INTERNACIONAL DE LIMITES Y AGUAS

S&B INFRASTRUCTURE, LTD.
Engineering Management Technology

S&B Infrastructure, Ltd. Firm Registration Number: 1582

STATE OF TEXAS
PHILLIP J. PAWELEK
82739
REGISTERED PROFESSIONAL ENGINEER

The seal appearing on this document was authorized by PHILLIP J. PAWELEK P.E. 82739, on 6-11, 2009.

Phillip J. Pawelek, P.E.

NORTH FLOODWAY SOUTH (NFS1) PROPOSED CROSS SECTIONS

SHEET 2 OF 60 SHEET

STATE	COUNTY	DRAWN BY: JL	CHECKED BY: JL	
TEXAS	HIDALGO	PROJECT NO. IBM09T0018		SHEET NO.
REHABILITATION OF NORTH FLOODWAY NORTH AND SOUTH LEVEES (FM 1015 - BASELINE RD.)				10.114

7:06:12 PM 6/10/2009 N:\Project\U0450\U045015\800*WorkingFiles\Dgn\0450NFS1sLVpxs02.dgn

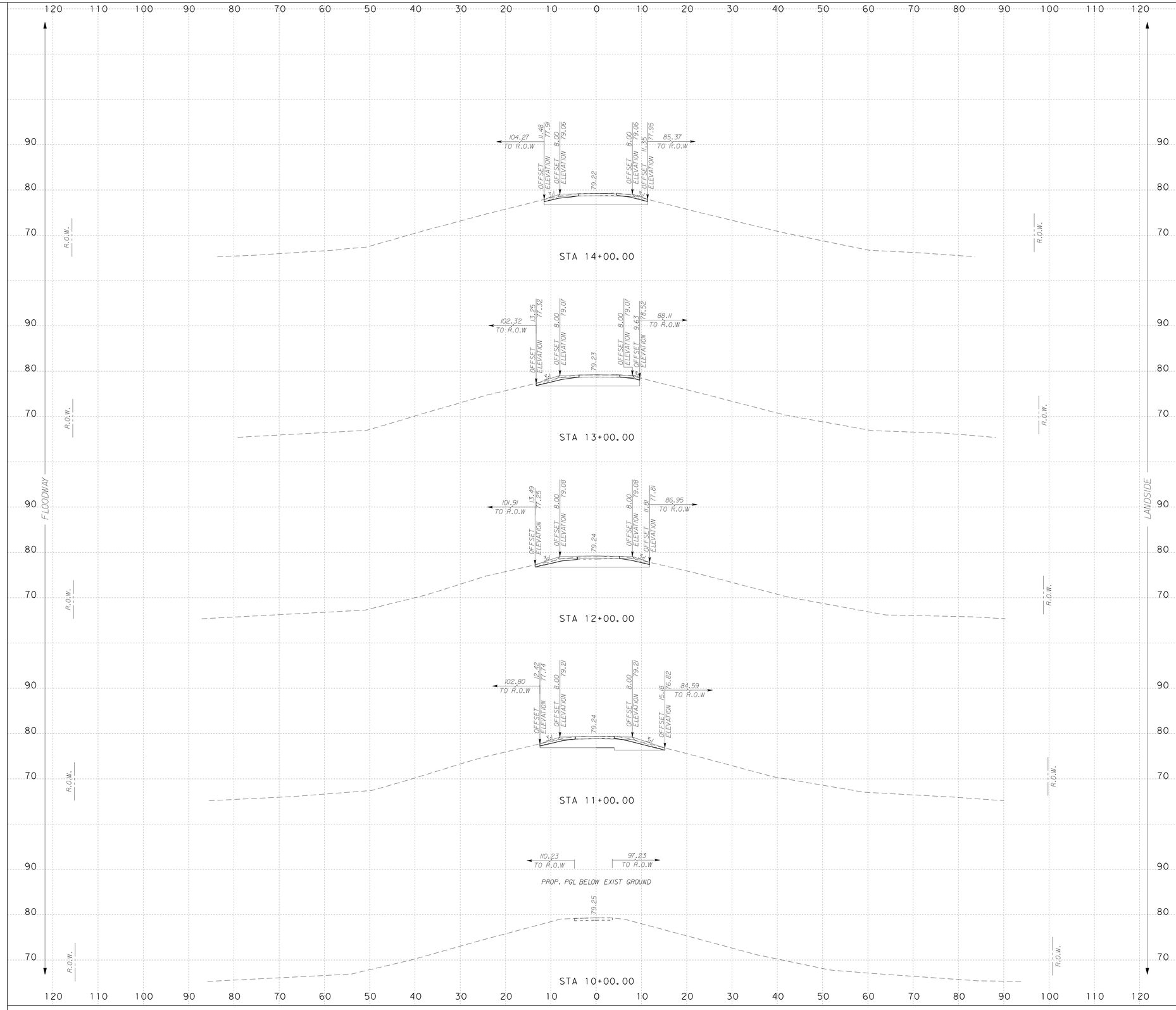

NOTES:

SURFACE DRAINAGE SHALL BE ESTABLISHED BY THE CONTRACTOR PRIOR TO AND DURING CONSTRUCTION TO PREVENT WATER FROM PONDING WITHIN OR ADJACENT TO THE LEVEE STRUCTURE.

IT IS INTENDED THAT THE FINAL SECTION OF THE PROPOSED LEVEE SHALL FACILITATE RAPID DRAINAGE AWAY FROM THE LEVEE STRUCTURE.

SCALE: H : 1"=10'
V : 1"=10'

INTERNATIONAL BOUNDARY AND WATER COMMISSION
COMISION INTERNACIONAL DE LIMITES Y AGUAS

S&B INFRASTRUCTURE, LTD.
Engineering Management Technology

S&B Infrastructure, Ltd. Firm Registration Number: 1582

STATE OF TEXAS
PHILLIP J. PAWELEK
82739
REGISTERED PROFESSIONAL ENGINEER

The seal appearing on this document was authorized by PHILLIP J. PAWELEK P.E. 82739, on 6-11, 2009

Phillip J. Pawelek, P.E.

NORTH FLOODWAY SOUTH (NFS1)
PROPOSED CROSS SECTIONS

SHEET 3 OF 60 SHEET

STATE	COUNTY	DRAWN BY: JL	CHECKED BY: JL	
TEXAS	HIDALGO	PROJECT NO. IBM09T0018		SHEET NO.
REHABILITATION OF NORTH FLOODWAY NORTH AND SOUTH LEVEES (FM 1015 - BASELINE RD.)				10.115

7:06:15 PM 6/10/2009 N:\Project\u0450\U0450515\800\WorkingFiles\Dgn\0450NFS1sLVpxs02.dgn

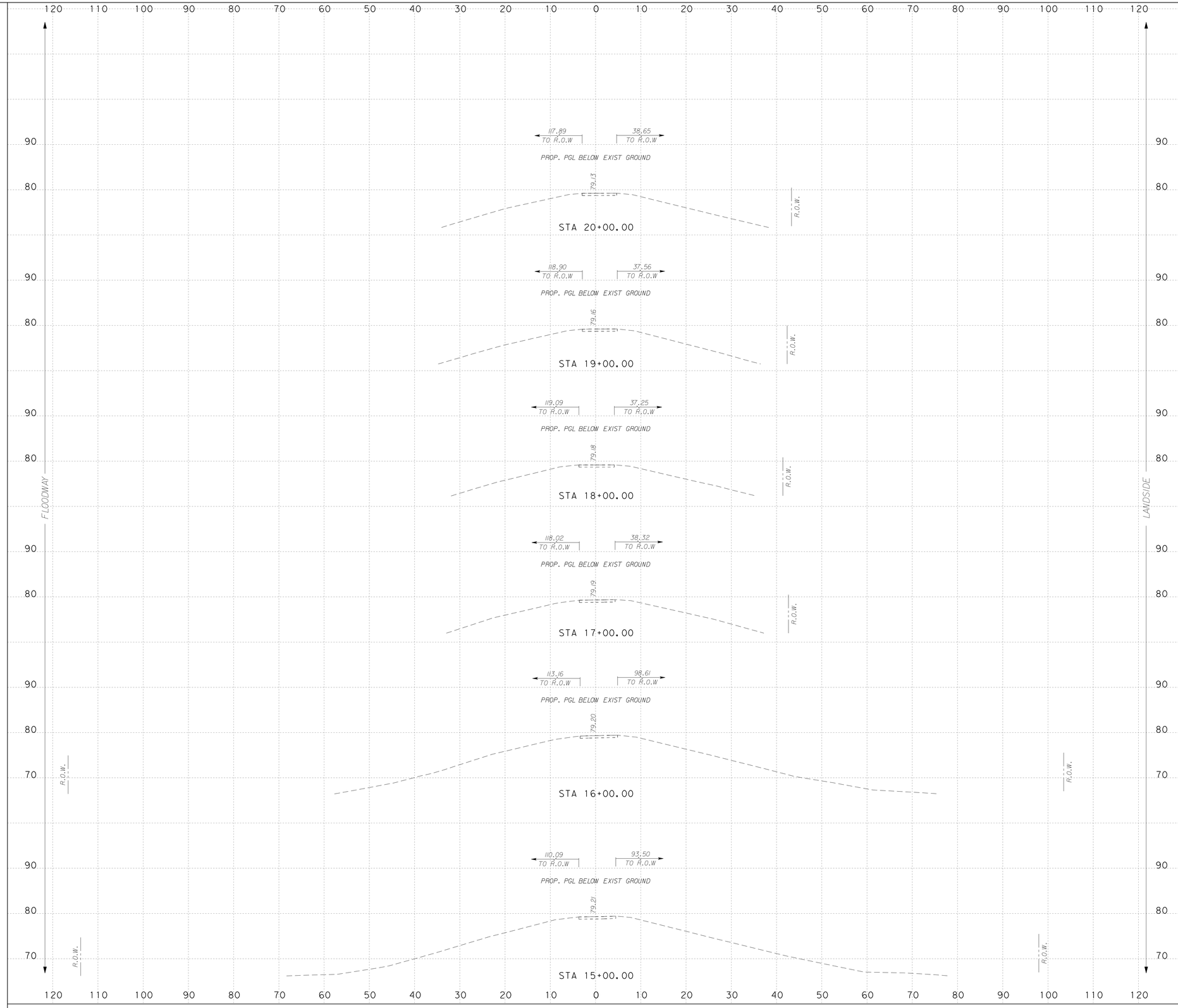

NOTES:

SURFACE DRAINAGE SHALL BE ESTABLISHED BY THE CONTRACTOR PRIOR TO AND DURING CONSTRUCTION TO PREVENT WATER FROM PONDING WITHIN OR ADJACENT TO THE LEVEE STRUCTURE.

IT IS INTENDED THAT THE FINAL SECTION OF THE PROPOSED LEVEE SHALL FACILITATE RAPID DRAINAGE AWAY FROM THE LEVEE STRUCTURE.

SCALE: H : 1"=10'
V : 1"=10'

S&B INFRASTRUCTURE, LTD.
Engineering Management Technology

S&B Infrastructure, Ltd. Firm Registration Number: 1582

STATE OF TEXAS
PHILLIP J. PAWELEK
82739
REGISTERED PROFESSIONAL ENGINEER

The seal appearing on this document was authorized by PHILLIP J. PAWELEK P.E. 82739, on 6-11, 2009

Phillip J. Pawelek, P.E.

NORTH FLOODWAY SOUTH (NFS1) PROPOSED CROSS SECTIONS

SHEET 4 OF 60 SHEET

STATE	COUNTY	DRAWN BY: JL	CHECKED BY: JL	
TEXAS	HIDALGO	PROJECT NO. IBM09T0018		SHEET NO.
REHABILITATION OF NORTH FLOODWAY NORTH AND SOUTH LEVEES (FM 1015 - BASELINE RD.)				10.116

N:\Project\u0450\U045051\800\WorkingFiles\Dgn\0450NFS1sLVpxs02.dgn 6/10/2009 7:06:18 PM

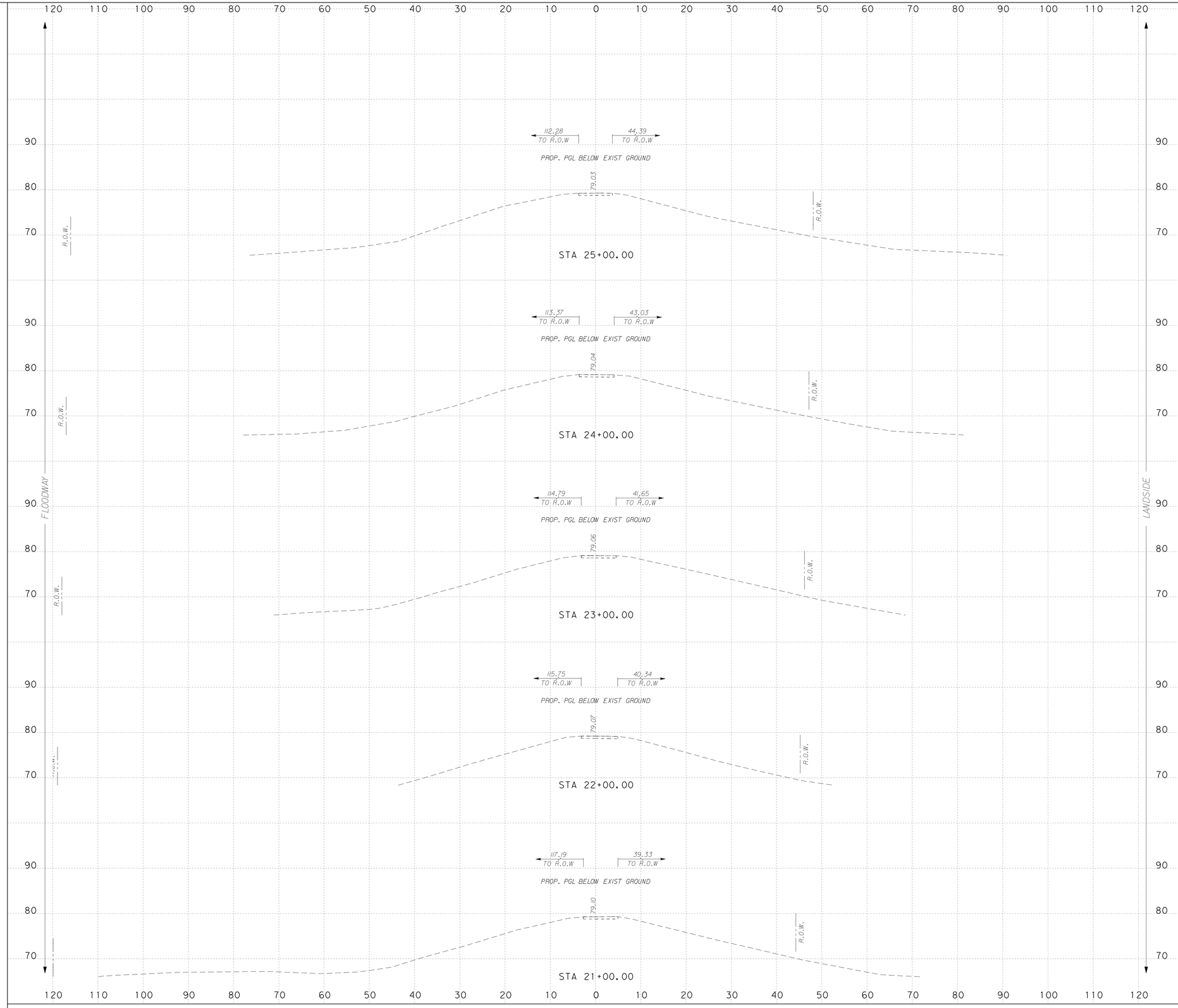

NOTES:

SURFACE DRAINAGE SHALL BE ESTABLISHED BY THE CONTRACTOR PRIOR TO AND DURING CONSTRUCTION TO PREVENT WATER FROM PONDING WITHIN OR ADJACENT TO THE LEVEE STRUCTURE.

IT IS INTENDED THAT THE FINAL SECTION OF THE PROPOSED LEVEE SHALL FACILITATE RAPID DRAINAGE AWAY FROM THE LEVEE STRUCTURE.

SCALE: H : 1"=10'
V : 1"=10'

S&B INFRASTRUCTURE, LTD.
Engineering Management Technology
S&B Infrastructure, Ltd. Firm Registration Number: 1582

STATE OF TEXAS
PHILLIP J. PAWELEK
82739
REGISTERED PROFESSIONAL ENGINEER

The seal appearing on this document was authorized by PHILLIP J. PAWELEK P.E. 82739, on 6-11, 2009

Phillip J. Pawelek, P.E.

NORTH FLOODWAY SOUTH (NFS1)
PROPOSED CROSS SECTIONS

SHEET 5 OF 60 SHEET

STATE	COUNTY	DRAWN BY: JL	CHECKED BY: JL	
TEXAS	HIDALGO	PROJECT NO. IBM09T0018		SHEET NO.
REHABILITATION OF NORTH FLOODWAY NORTH AND SOUTH LEVEES (FM 1015 - BASELINE RD.)				10.117

7:06:21 PM 6/10/2009 N:\Project\u0450\U045051\800\WorkingFiles\Dgn\0450NFS1sLVpxs02.dgn

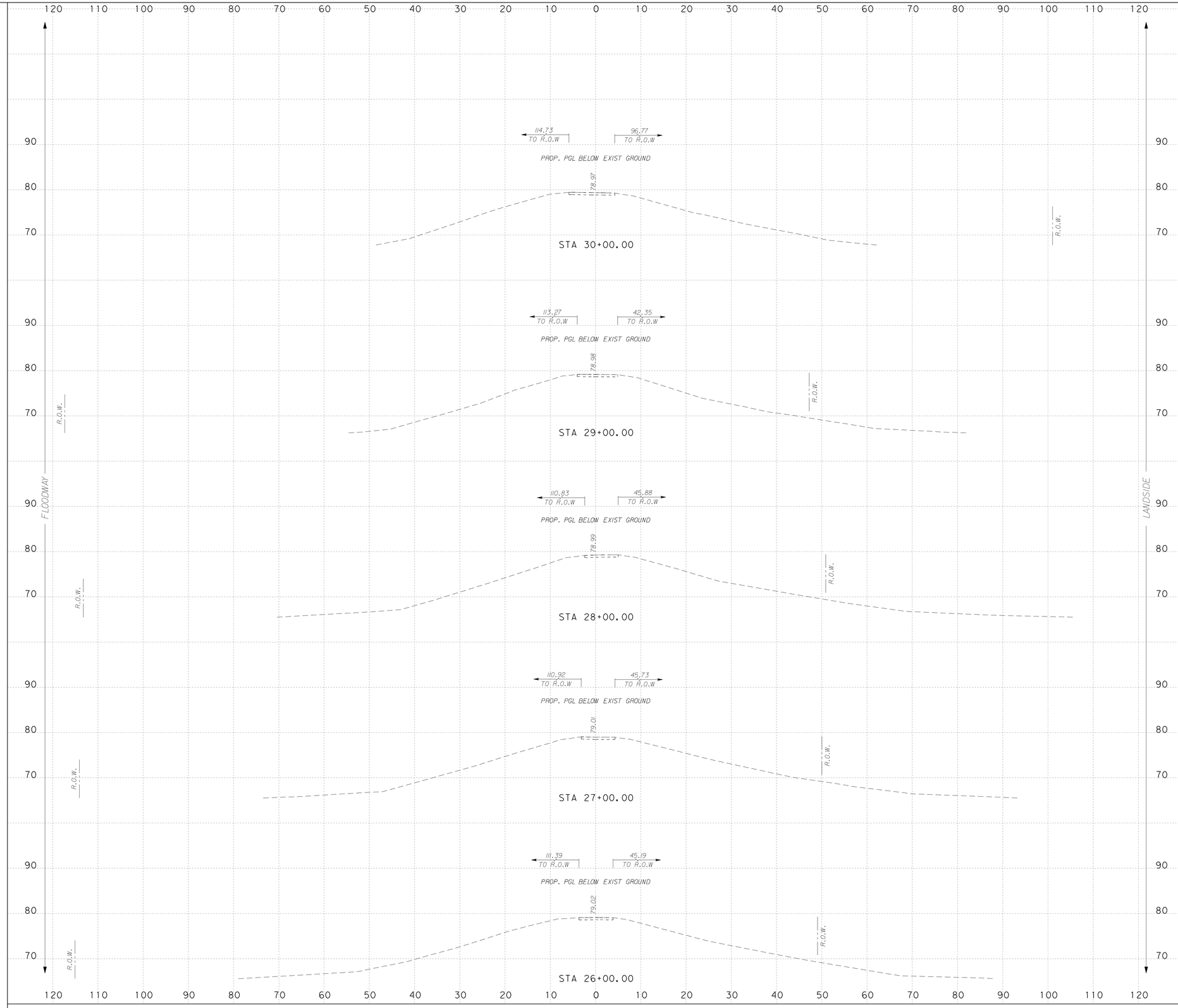

...\Dgn\0450NFS1sLVpxs02.dgn

NOTES:

SURFACE DRAINAGE SHALL BE ESTABLISHED BY THE CONTRACTOR PRIOR TO AND DURING CONSTRUCTION TO PREVENT WATER FROM PONDING WITHIN OR ADJACENT TO THE LEVEE STRUCTURE.

IT IS INTENDED THAT THE FINAL SECTION OF THE PROPOSED LEVEE SHALL FACILITATE RAPID DRAINAGE AWAY FROM THE LEVEE STRUCTURE.

SCALE: H : 1"=10'
V : 1"=10'

S&B INFRASTRUCTURE, LTD.
Engineering Management Technology

S&B Infrastructure, Ltd. Firm Registration Number: 1582

STATE OF TEXAS
PHILLIP J. PAWELEK
82739
REGISTERED PROFESSIONAL ENGINEER

The seal appearing on this document was authorized by PHILLIP J. PAWELEK P.E. 82739, on 6-11, 2009.

Phillip J. Pawelek, P.E.

NORTH FLOODWAY SOUTH (NFS1)
PROPOSED CROSS SECTIONS

SHEET 6 OF 60 SHEET

STATE	COUNTY	DRAWN BY: JL	CHECKED BY: JL	
TEXAS	HIDALGO	PROJECT NO. IBM09T0018		SHEET NO.
REHABILITATION OF NORTH FLOODWAY NORTH AND SOUTH LEVEES (FM 1015 - BASELINE RD.)				10.118

7:06:24 PM
6/10/2009
N:\Project\u0450\U0450515\800*WorkingFiles\Dgn\0450NFS1sLVpxs02.dgn

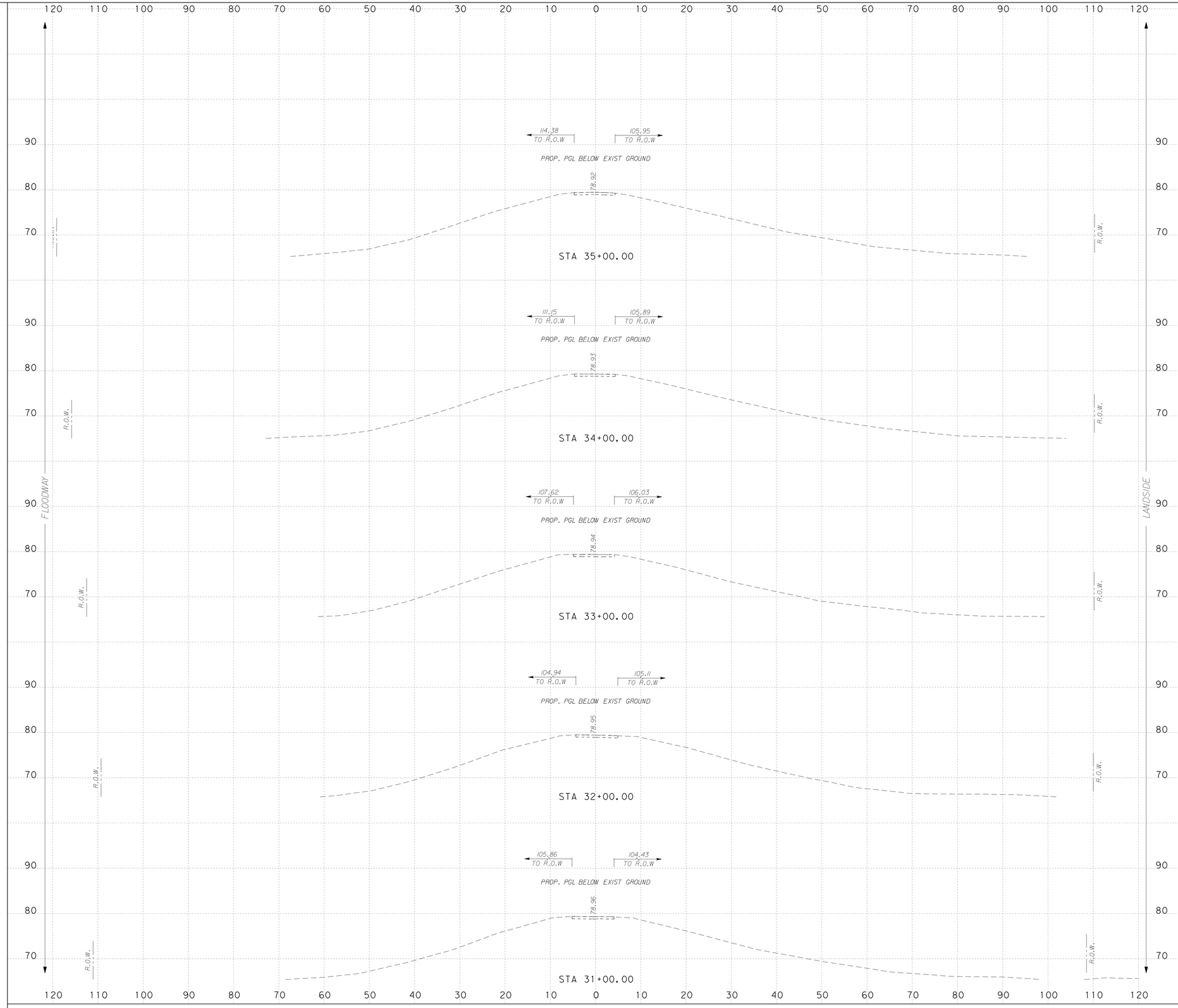

NOTES:

SURFACE DRAINAGE SHALL BE ESTABLISHED BY THE CONTRACTOR PRIOR TO AND DURING CONSTRUCTION TO PREVENT WATER FROM PONDING WITHIN OR ADJACENT TO THE LEVEE STRUCTURE.

IT IS INTENDED THAT THE FINAL SECTION OF THE PROPOSED LEVEE SHALL FACILITATE RAPID DRAINAGE AWAY FROM THE LEVEE STRUCTURE.

SCALE: H : 1"=10'
V : 1"=10'

S&B INFRASTRUCTURE, LTD.
Engineering Management Technology
S&B Infrastructure, Ltd. Firm Registration Number: 1582

STATE OF TEXAS
PHILLIP J. PAWELEK
82739
REGISTERED PROFESSIONAL ENGINEER

The seal appearing on this document was authorized by PHILLIP J. PAWELEK P.E. 82739, on 6-11, 2009

Phillip J. Pawelek, P.E.

NORTH FLOODWAY SOUTH (NFS1)
PROPOSED CROSS SECTIONS

SHEET 7 OF 60 SHEET

STATE	COUNTY	DRAWN BY: JL	CHECKED BY: JL	
TEXAS	HIDALGO	PROJECT NO. IBM09T0018		SHEET NO.
REHABILITATION OF NORTH FLOODWAY NORTH AND SOUTH LEVEES (FM 1015 - BASELINE RD.)				10.119

7:06:26 PM 6/10/2009 N:\Project\u0450\U045015\800\WorkingFiles\Dgn\0450NFS1sLVpxs02.dgn

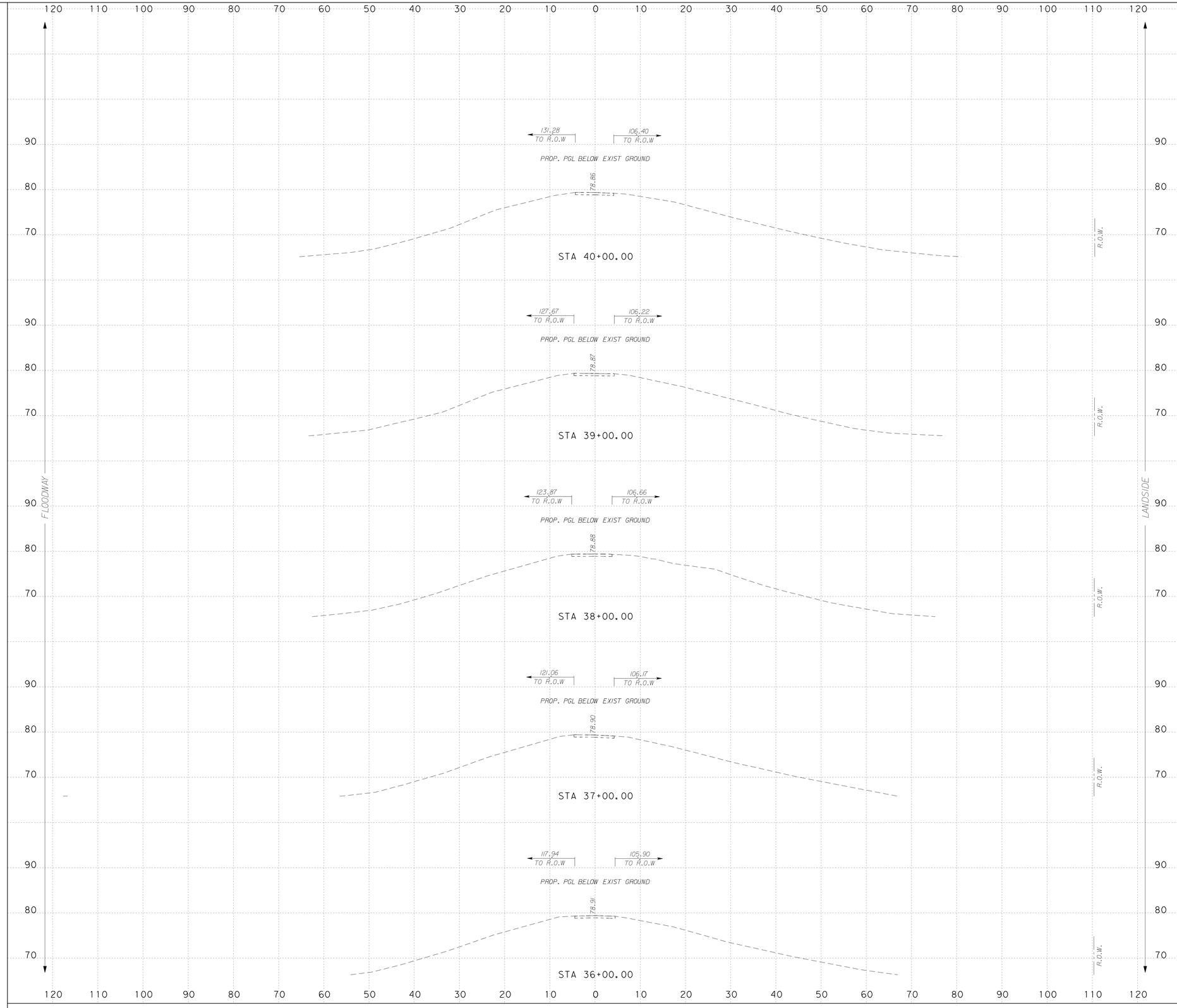

NOTES:

SURFACE DRAINAGE SHALL BE ESTABLISHED BY THE CONTRACTOR PRIOR TO AND DURING CONSTRUCTION TO PREVENT WATER FROM PONDING WITHIN OR ADJACENT TO THE LEVEE STRUCTURE.

IT IS INTENDED THAT THE FINAL SECTION OF THE PROPOSED LEVEE SHALL FACILITATE RAPID DRAINAGE AWAY FROM THE LEVEE STRUCTURE.

SCALE: H : 1"=10'
V : 1"=10'

S&B INFRASTRUCTURE, LTD.
Engineering Management Technology

S&B Infrastructure, Ltd. Firm Registration Number: 1582

STATE OF TEXAS
PHILLIP J. PAWELEK
82739
REGISTERED PROFESSIONAL ENGINEER

The seal appearing on this document was authorized by PHILLIP J. PAWELEK P.E. 82739, on 6-11, 2009

Phillip J. Pawelek, P.E.

NORTH FLOODWAY SOUTH (NFS1)
PROPOSED CROSS SECTIONS

SHEET 8 OF 60 SHEET

STATE	COUNTY	DRAWN BY: JL	CHECKED BY: JL	
TEXAS	HIDALGO	PROJECT NO. IBM09T0018		SHEET NO.
REHABILITATION OF NORTH FLOODWAY NORTH AND SOUTH LEVEES (FM 1015 - BASELINE RD.)				10.120

7:06:29 PM 6/10/2009 N:\Project\u0450\U045015\800\WorkingFiles\Dgn\0450NFS1sLVpxs02.dgn

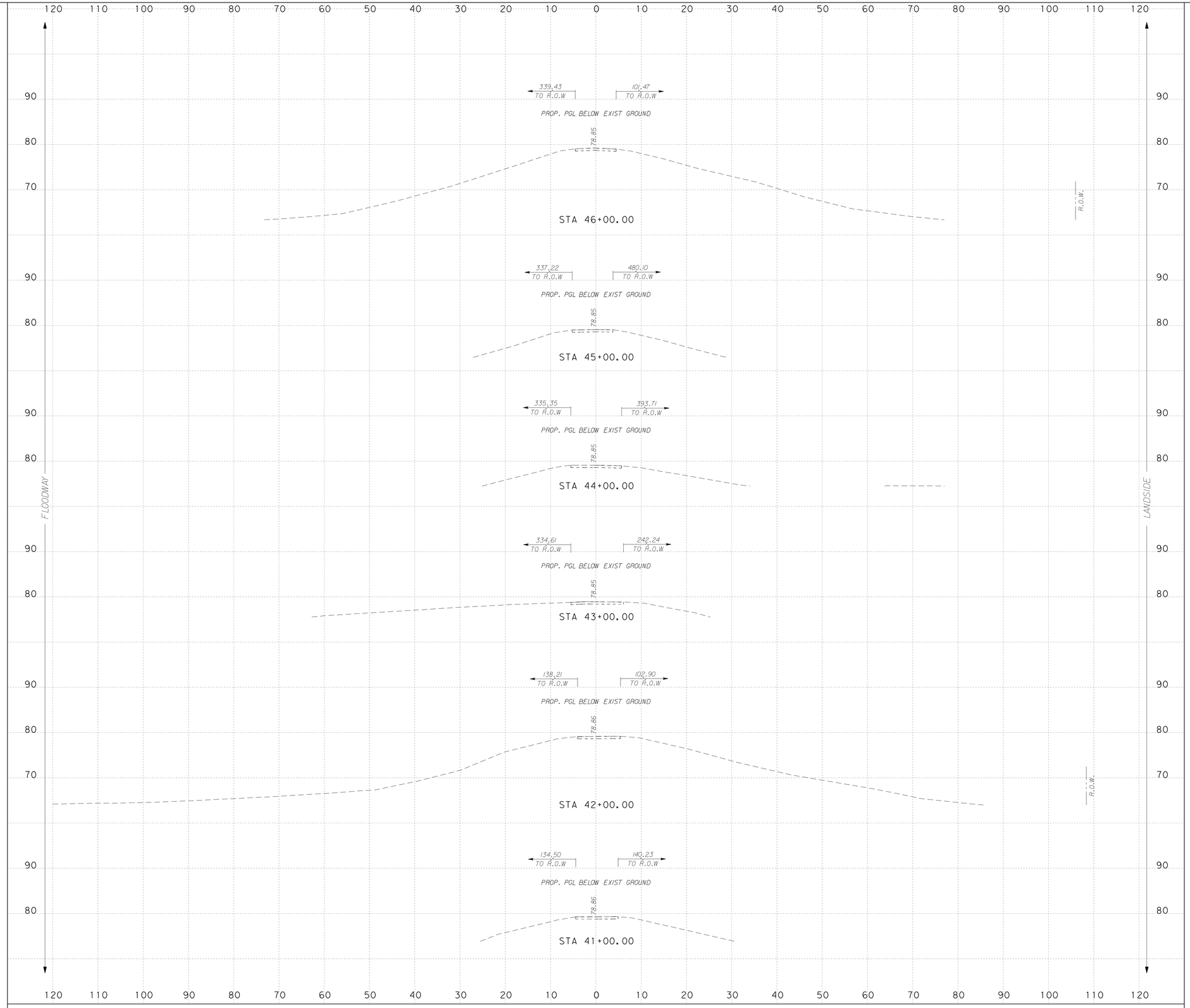

...\Dgn\0450NFS1sLVpxs02.dgn

NOTES:

SURFACE DRAINAGE SHALL BE ESTABLISHED BY THE CONTRACTOR PRIOR TO AND DURING CONSTRUCTION TO PREVENT WATER FROM PONDING WITHIN OR ADJACENT TO THE LEVEE STRUCTURE.

IT IS INTENDED THAT THE FINAL SECTION OF THE PROPOSED LEVEE SHALL FACILITATE RAPID DRAINAGE AWAY FROM THE LEVEE STRUCTURE.

SCALE: H : 1"=10'
V : 1"=10'

S&B INFRASTRUCTURE, LTD.
Engineering Management Technology

S&B Infrastructure, Ltd. Firm Registration Number: 1582

STATE OF TEXAS
PHILLIP J. PAWELEK
82739
REGISTERED PROFESSIONAL ENGINEER

The seal appearing on this document was authorized by PHILLIP J. PAWELEK P.E. 82739, on 6-11, 2009.

Phillip J. Pawelek, P.E.

NORTH FLOODWAY SOUTH (NFS1)
PROPOSED CROSS SECTIONS

SHEET 9 OF 60 SHEET

STATE	COUNTY	DRAWN BY: JL	CHECKED BY: JL	
TEXAS	HIDALGO	PROJECT NO. IBM09T0018		SHEET NO.
REHABILITATION OF NORTH FLOODWAY NORTH AND SOUTH LEVEES (FM 1015 - BASELINE RD.)				10.121

7:06:32 PM
6/10/2009
N:\Project\u0450\U0450515\800*WorkingFiles\Dgn\0450NFS1sLVpxs02.dgn

...\Dgn\0450NFS1sLVpxs02.dgn

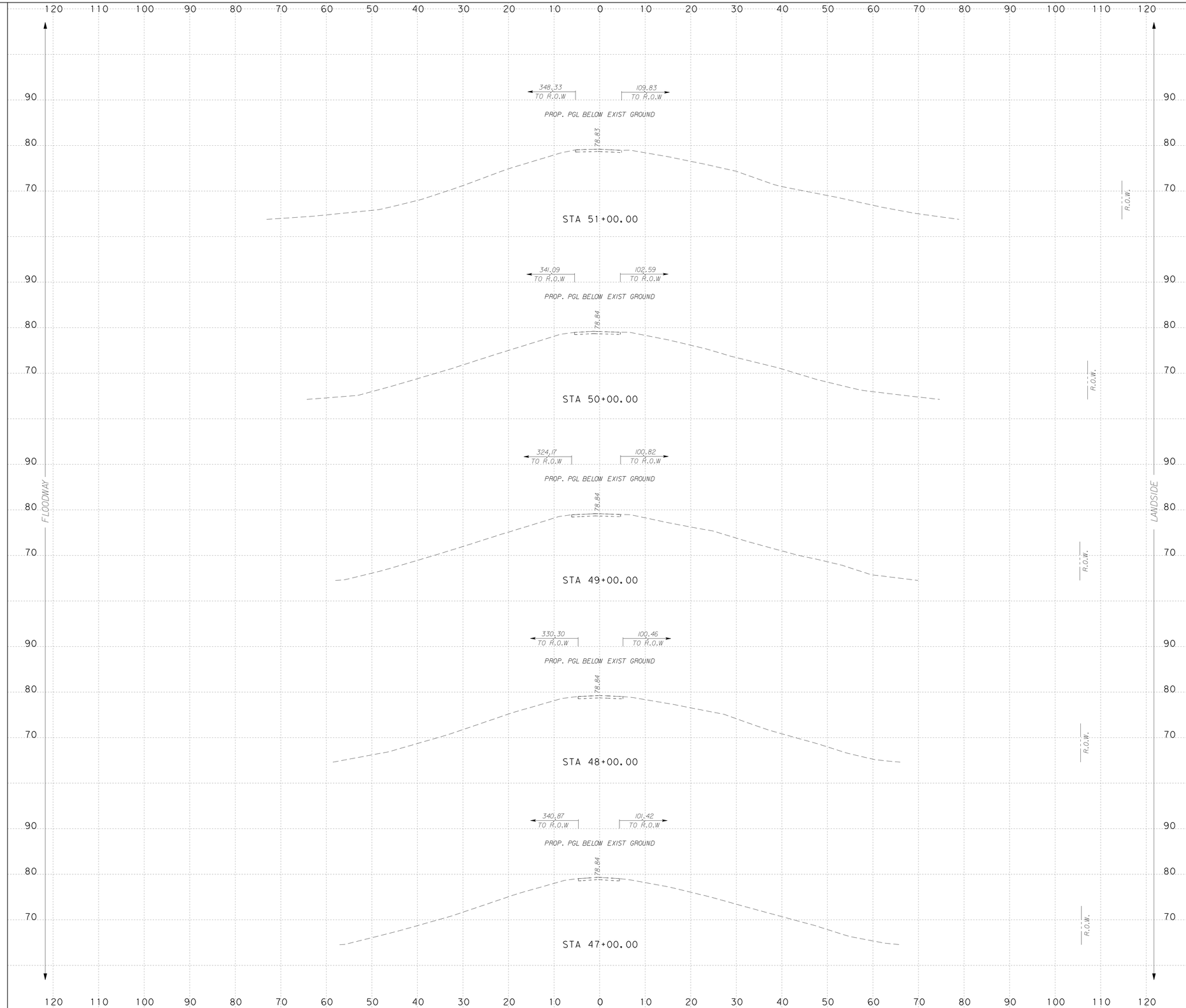

NOTES:

SURFACE DRAINAGE SHALL BE ESTABLISHED BY THE CONTRACTOR PRIOR TO AND DURING CONSTRUCTION TO PREVENT WATER FROM PONDING WITHIN OR ADJACENT TO THE LEVEE STRUCTURE.

IT IS INTENDED THAT THE FINAL SECTION OF THE PROPOSED LEVEE SHALL FACILITATE RAPID DRAINAGE AWAY FROM THE LEVEE STRUCTURE.

SCALE: H : 1"=10'
V : 1"=10'

INTERNATIONAL BOUNDARY AND WATER COMMISSION
COMISION INTERNACIONAL DE LIMITES Y AGUAS

S&B INFRASTRUCTURE, LTD.
Engineering Management Technology

S&B Infrastructure, Ltd. Firm Registration Number: 1582

STATE OF TEXAS
PHILLIP J. PAWELEK
82739
REGISTERED PROFESSIONAL ENGINEER

The seal appearing on this document was authorized by PHILLIP J. PAWELEK P.E. 82739, on 6-11, 2009.

Phillip J. Pawelek, P.E.

NORTH FLOODWAY SOUTH (NFS1)
PROPOSED CROSS SECTIONS

SHEET 10 OF 60 SHEET

STATE	COUNTY	DRAWN BY: JL	CHECKED BY: JL	
TEXAS	HIDALGO	PROJECT NO. IBM09T0018		SHEET NO.
REHABILITATION OF NORTH FLOODWAY NORTH AND SOUTH LEVEES (FM 1015 - BASELINE RD.)				10.122

7:06:35 PM 6/10/2009

N:\Project\0450\0450515\800-WorkingFiles\Dgn\0450NFS1sLVpxs02.dgn

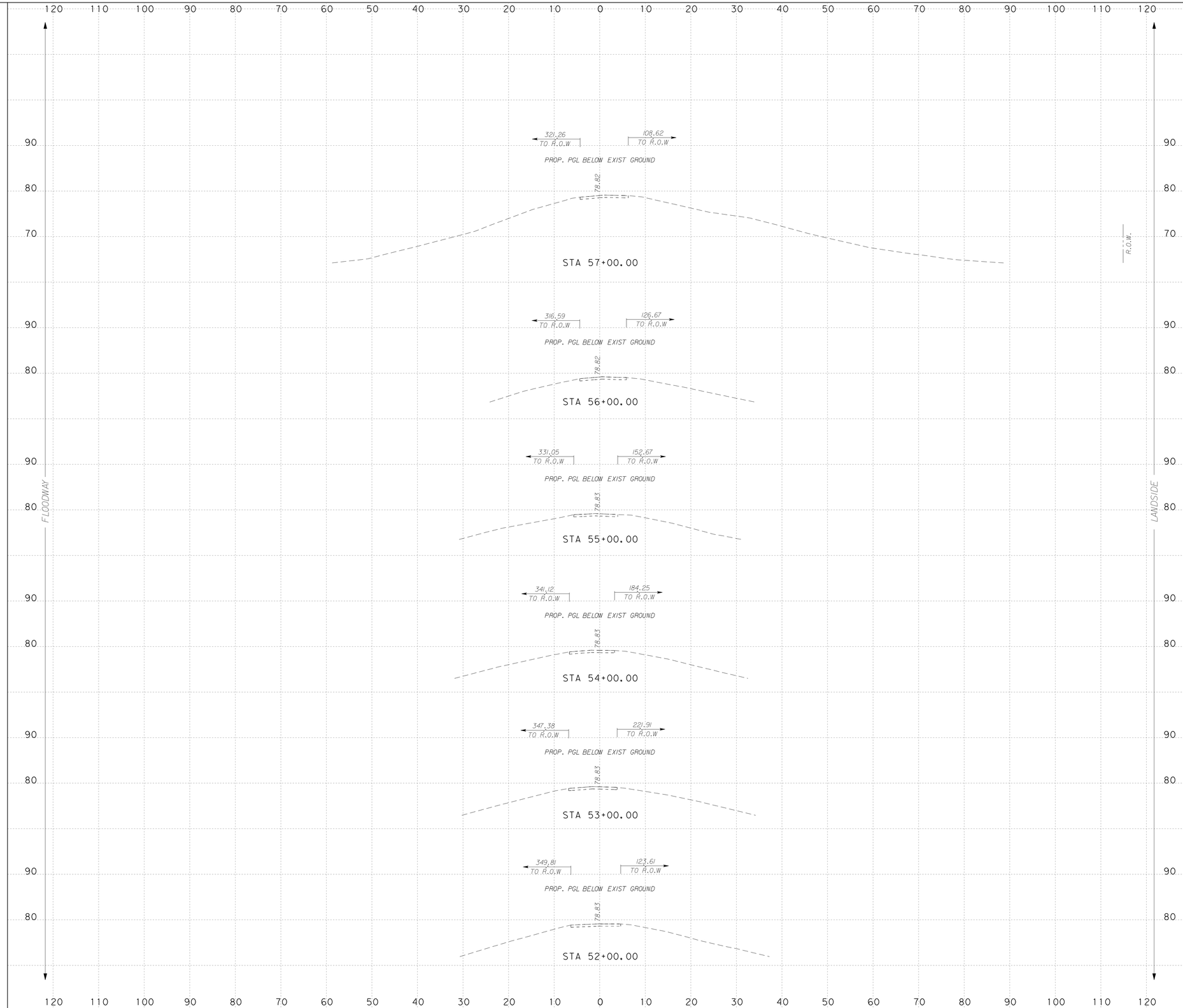

NOTES:

SURFACE DRAINAGE SHALL BE ESTABLISHED BY THE CONTRACTOR PRIOR TO AND DURING CONSTRUCTION TO PREVENT WATER FROM PONDING WITHIN OR ADJACENT TO THE LEVEE STRUCTURE.

IT IS INTENDED THAT THE FINAL SECTION OF THE PROPOSED LEVEE SHALL FACILITATE RAPID DRAINAGE AWAY FROM THE LEVEE STRUCTURE.

SCALE: H : 1"=10'
V : 1"=10'

S&B INFRASTRUCTURE, LTD.
Engineering Management Technology
S&B Infrastructure, Ltd. Firm Registration Number: 1582

STATE OF TEXAS
PHILLIP J. PAWELEK
82739
REGISTERED PROFESSIONAL ENGINEER

The seal appearing on this document was authorized by PHILLIP J. PAWELEK P.E. 82739, on 6-11, 2009.

Phillip J. Pawelek, P.E.

NORTH FLOODWAY SOUTH (NFS1)
PROPOSED CROSS SECTIONS

SHEET 11 OF 60 SHEET

STATE	COUNTY	DRAWN BY: JL	CHECKED BY: JL	
TEXAS	HIDALGO	PROJECT NO. IBM09T0018		SHEET NO.
REHABILITATION OF NORTH FLOODWAY NORTH AND SOUTH LEVEES (FM 1015 - BASELINE RD.)				10.123

7:06:38 PM 6/10/2009 N:\Project\0450\0450515\800-WorkingFiles\Dgn\0450NFS1sLVpxs02.dgn

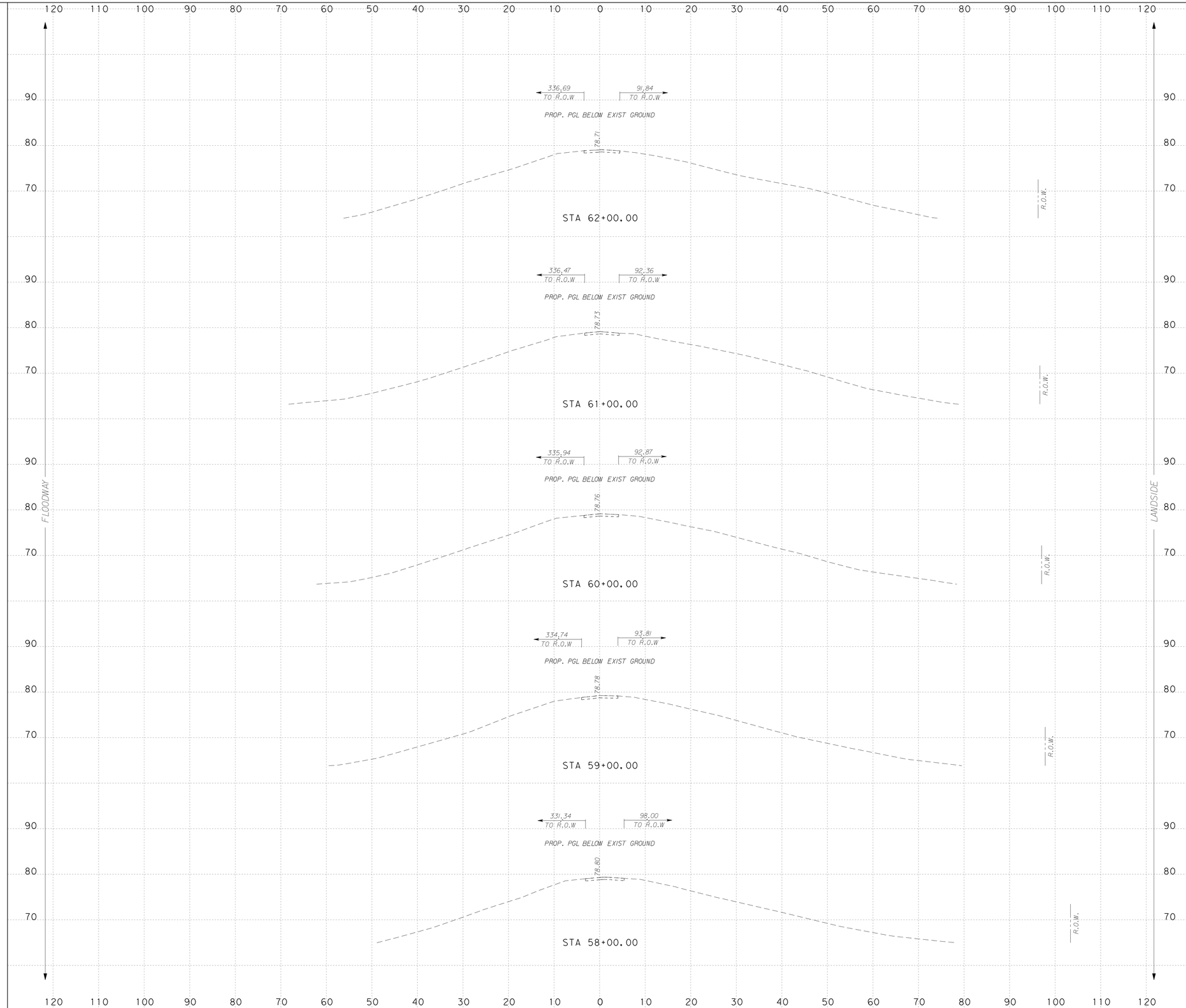

NOTES:

SURFACE DRAINAGE SHALL BE ESTABLISHED BY THE CONTRACTOR PRIOR TO AND DURING CONSTRUCTION TO PREVENT WATER FROM PONDING WITHIN OR ADJACENT TO THE LEVEE STRUCTURE.

IT IS INTENDED THAT THE FINAL SECTION OF THE PROPOSED LEVEE SHALL FACILITATE RAPID DRAINAGE AWAY FROM THE LEVEE STRUCTURE.

SCALE: H : 1"=10'
V : 1"=10'

INTERNATIONAL BOUNDARY AND WATER COMMISSION
COMISION INTERNACIONAL DE LIMITES Y AGUAS

S&B INFRASTRUCTURE, LTD.
Engineering Management Technology

S&B Infrastructure, Ltd. Firm Registration Number: 1582

STATE OF TEXAS
PHILLIP J. PAWELEK
82739
REGISTERED PROFESSIONAL ENGINEER

The seal appearing on this document was authorized by PHILLIP J. PAWELEK P.E. 82739, on 6-11, 2009.

Phillip J. Pawelek, P.E.

NORTH FLOODWAY SOUTH (NFS1) PROPOSED CROSS SECTIONS

SHEET 12 OF 60 SHEET

STATE	COUNTY	DRAWN BY: JL	CHECKED BY: JL	
TEXAS	HIDALGO	PROJECT NO. IBM09T0018		SHEET NO.
REHABILITATION OF NORTH FLOODWAY NORTH AND SOUTH LEVEES (FM 1015 - BASELINE RD.)				10.124

N:\Project\0450\0450515\800-WorkingFiles\Dgn\0450NFS1sLVpxs02.dgn
6/10/2009 7:06:41 PM

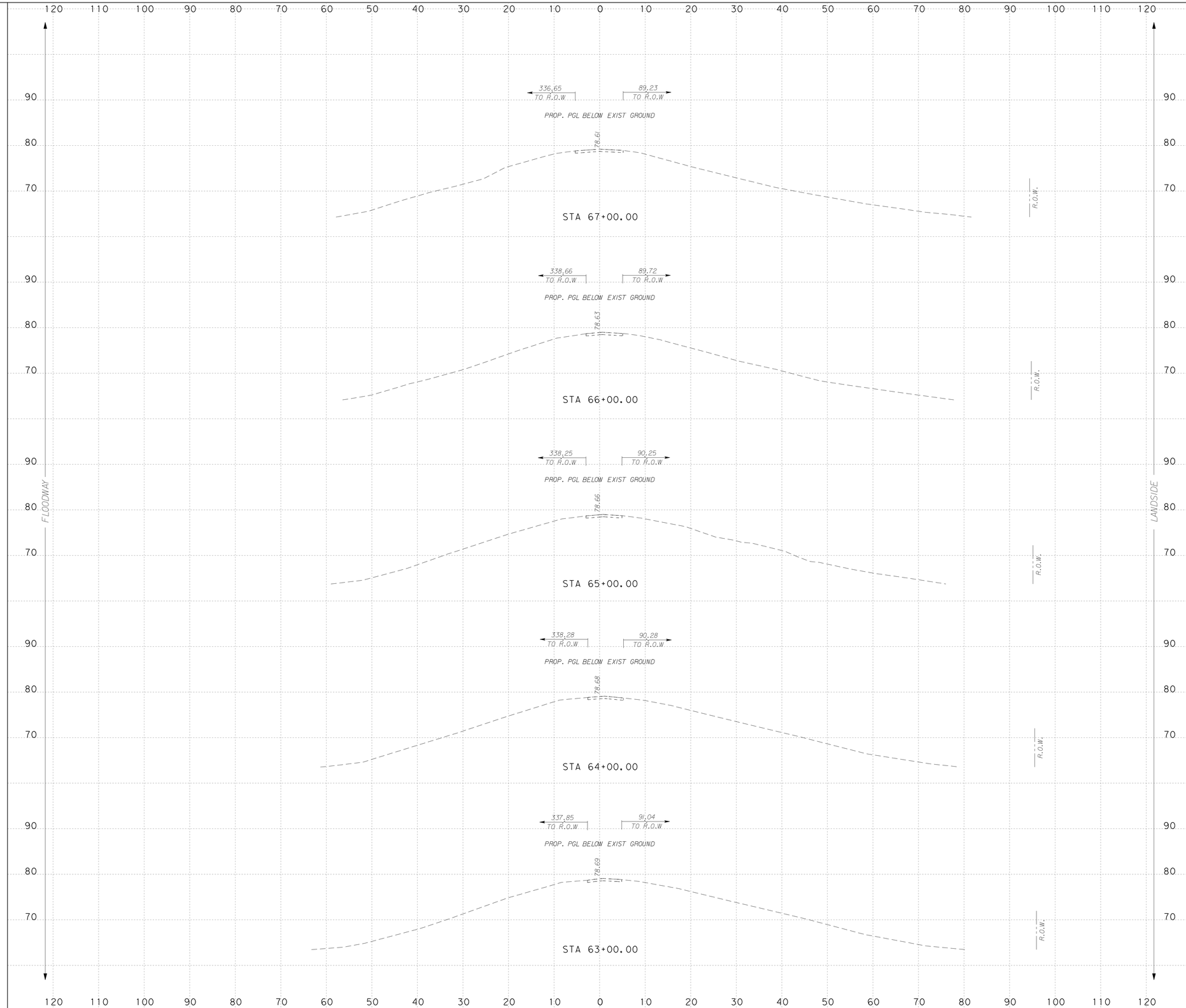

NOTES:

SURFACE DRAINAGE SHALL BE ESTABLISHED BY THE CONTRACTOR PRIOR TO AND DURING CONSTRUCTION TO PREVENT WATER FROM PONDING WITHIN OR ADJACENT TO THE LEVEE STRUCTURE.

IT IS INTENDED THAT THE FINAL SECTION OF THE PROPOSED LEVEE SHALL FACILITATE RAPID DRAINAGE AWAY FROM THE LEVEE STRUCTURE.

SCALE: H : 1"=10'
V : 1"=10'

INTERNATIONAL BOUNDARY AND WATER COMMISSION
COMISION INTERNACIONAL DE LIMITES Y AGUAS

S&B INFRASTRUCTURE, LTD.
Engineering Management Technology

S&B Infrastructure, Ltd. Firm Registration Number: 1582

STATE OF TEXAS
PHILLIP J. PAWELEK
82739
REGISTERED PROFESSIONAL ENGINEER

The seal appearing on this document was authorized by PHILLIP J. PAWELEK P.E. 82739, on 6-11, 2009.

Phillip J. Pawelek, P.E.

NORTH FLOODWAY SOUTH (NFS1) PROPOSED CROSS SECTIONS

SHEET 13 OF 60 SHEET

STATE	COUNTY	DRAWN BY: JL	CHECKED BY: JL	
TEXAS	HIDALGO	PROJECT NO. IBM09T0018		SHEET NO.
REHABILITATION OF NORTH FLOODWAY NORTH AND SOUTH LEVEES (FM 1015 - BASELINE RD.)				10.125

7:06:44 PM 6/10/2009
N:\Project\0450\0450515\800-WorkingFiles\Dgn\0450NFS1sLVpxs02.dgn

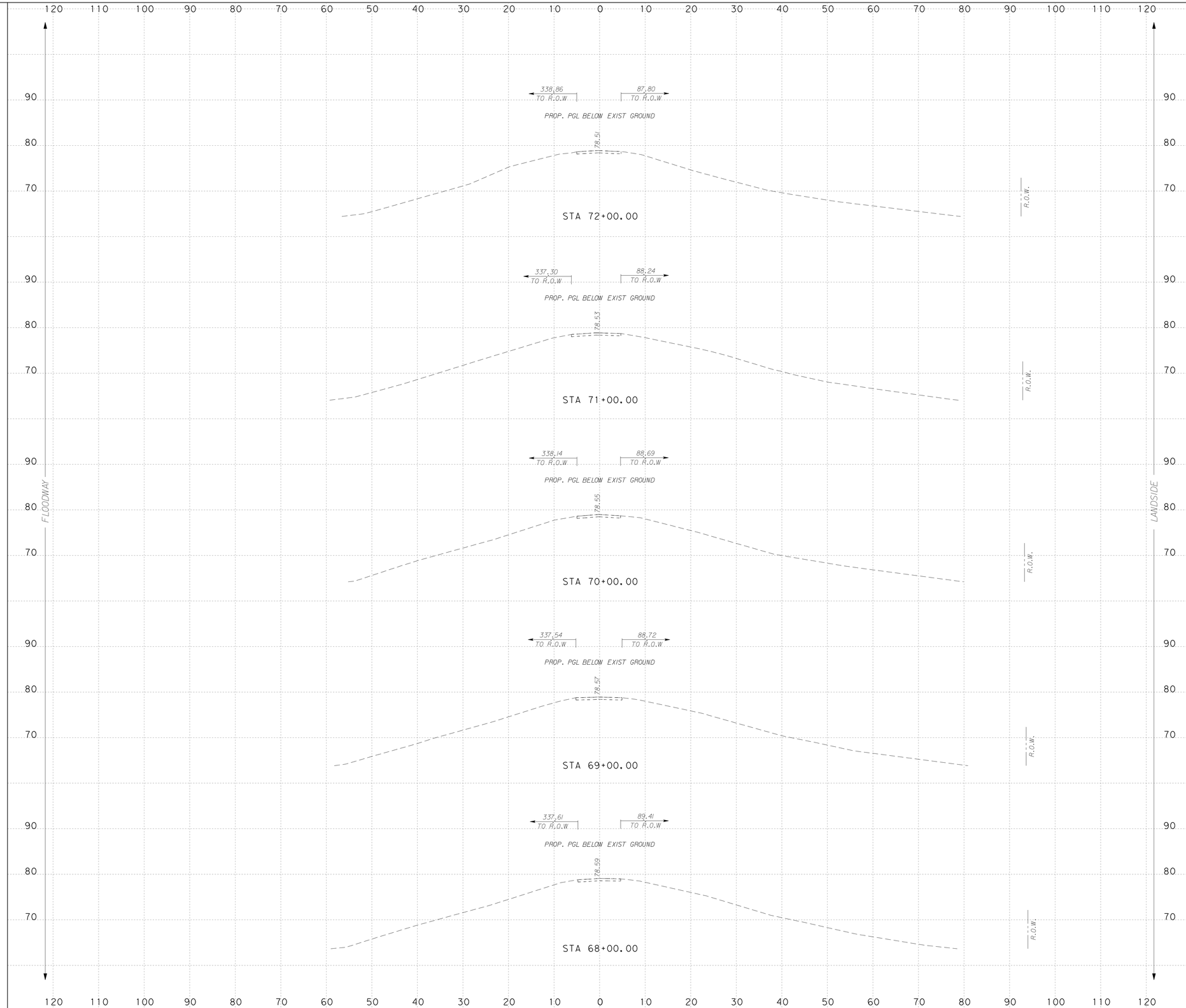

NOTES:

SURFACE DRAINAGE SHALL BE ESTABLISHED BY THE CONTRACTOR PRIOR TO AND DURING CONSTRUCTION TO PREVENT WATER FROM PONDING WITHIN OR ADJACENT TO THE LEVEE STRUCTURE.

IT IS INTENDED THAT THE FINAL SECTION OF THE PROPOSED LEVEE SHALL FACILITATE RAPID DRAINAGE AWAY FROM THE LEVEE STRUCTURE.

SCALE: H : 1"=10'
V : 1"=10'

INTERNATIONAL BOUNDARY AND WATER COMMISSION
COMISION INTERNACIONAL DE LIMITES Y AGUAS

S&B INFRASTRUCTURE, LTD.
Engineering Management Technology

S&B Infrastructure, Ltd. Firm Registration Number: 1582

STATE OF TEXAS
PHILLIP J. PAWELEK
82739
REGISTERED PROFESSIONAL ENGINEER

The seal appearing on this document was authorized by PHILLIP J. PAWELEK P.E. 82739, on 6-11, 2009.

Phillip J. Pawelek, P.E.

NORTH FLOODWAY SOUTH (NFS1) PROPOSED CROSS SECTIONS

SHEET 14 OF 60 SHEET

STATE	COUNTY	DRAWN BY: JL	CHECKED BY: JL	
TEXAS	HIDALGO	PROJECT NO. IBM09T0018		SHEET NO.
REHABILITATION OF NORTH FLOODWAY NORTH AND SOUTH LEVEES (FM 1015 - BASELINE RD.)				10.126

7:06:46 PM 6/10/2009 N:\Project\0450\0450515\800-WorkingFiles\Dgn\0450NFS1sLVpxs02.dgn

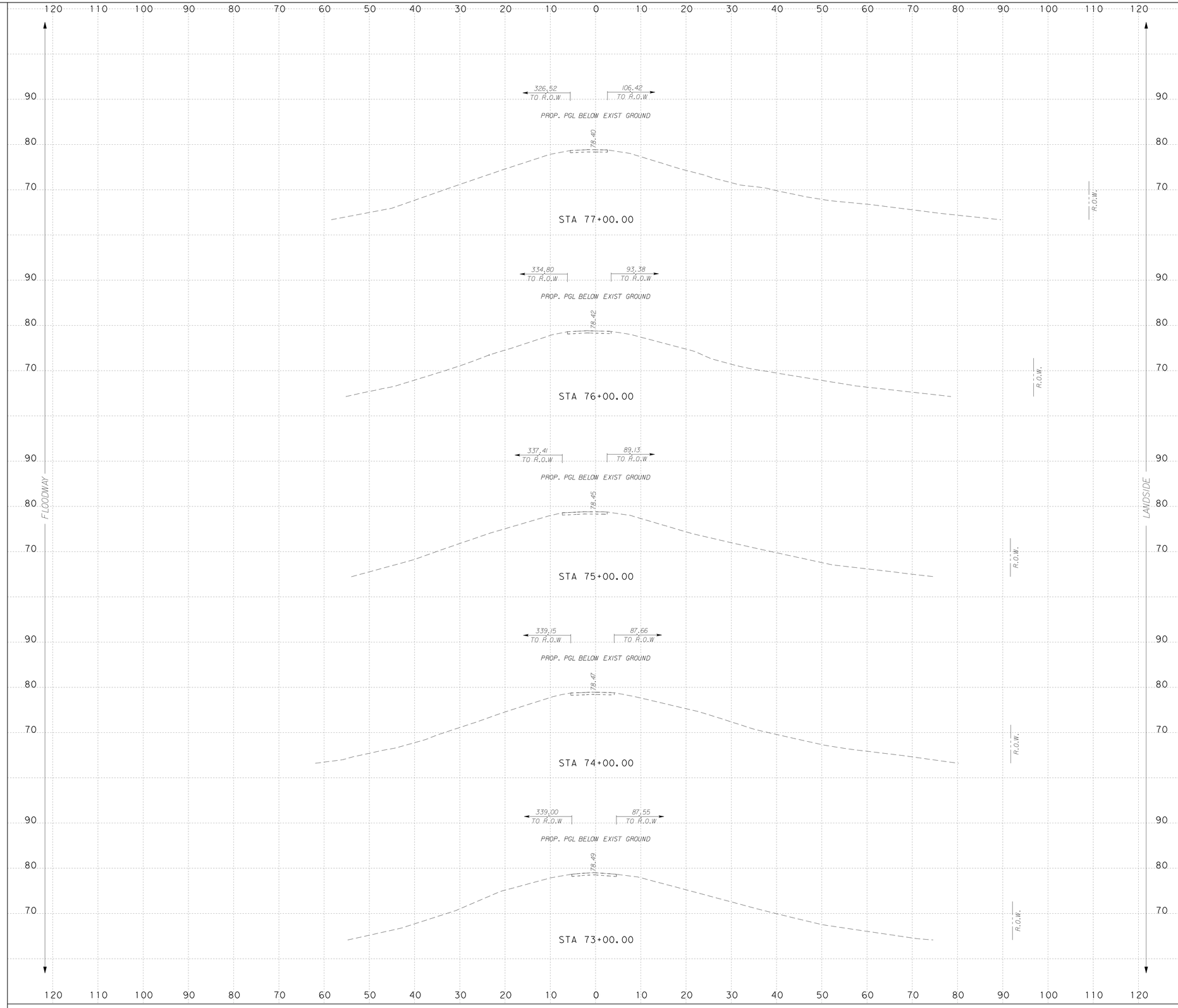

NOTES:

SURFACE DRAINAGE SHALL BE ESTABLISHED BY THE CONTRACTOR PRIOR TO AND DURING CONSTRUCTION TO PREVENT WATER FROM PONDING WITHIN OR ADJACENT TO THE LEVEE STRUCTURE.

IT IS INTENDED THAT THE FINAL SECTION OF THE PROPOSED LEVEE SHALL FACILITATE RAPID DRAINAGE AWAY FROM THE LEVEE STRUCTURE.

SCALE: H : 1"=10'
V : 1"=10'

S&B INFRASTRUCTURE, LTD.
Engineering Management Technology
S&B Infrastructure, Ltd. Firm Registration Number: 1582

STATE OF TEXAS
PHILLIP J. PAWELEK
82739
REGISTERED PROFESSIONAL ENGINEER

The seal appearing on this document was authorized by PHILLIP J. PAWELEK P.E. 82739, on 6-11, 2009

Phillip J. Pawelek, P.E.

NORTH FLOODWAY SOUTH (NFS1)
PROPOSED CROSS SECTIONS

SHEET 15 OF 60 SHEET

STATE	COUNTY	DRAWN BY: JL	CHECKED BY: JL	
TEXAS	HIDALGO	PROJECT NO. IBM09T0018		SHEET NO.
REHABILITATION OF NORTH FLOODWAY NORTH AND SOUTH LEVEES (FM 1015 - BASELINE RD.)				10.127

7:06:49 PM 6/10/2009
N:\Project\u0450\U0450515\8204\WorkingFiles\Dgn\0450NFS1sLVpxs02.dgn

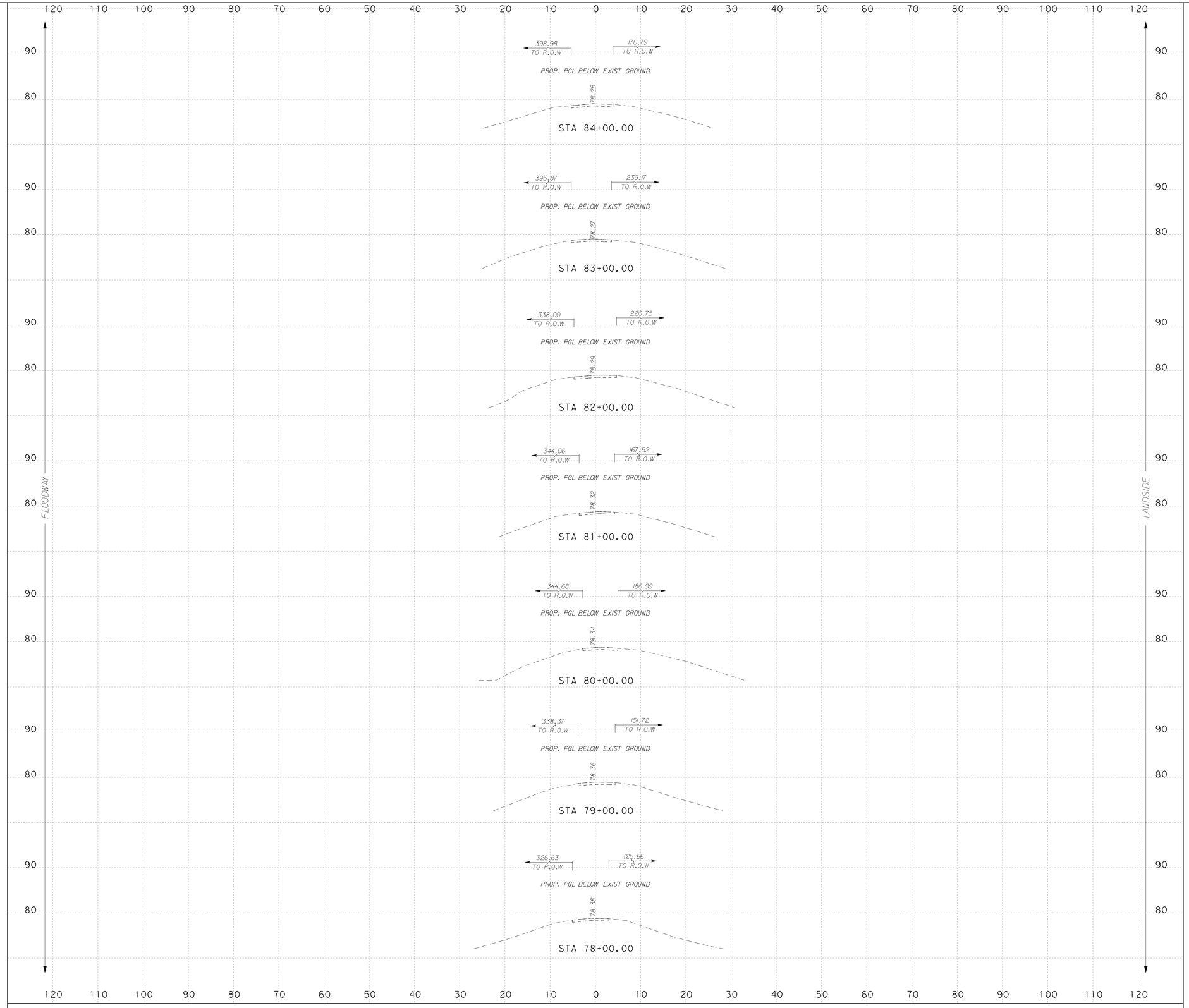

NOTES:

SURFACE DRAINAGE SHALL BE ESTABLISHED BY THE CONTRACTOR PRIOR TO AND DURING CONSTRUCTION TO PREVENT WATER FROM PONDING WITHIN OR ADJACENT TO THE LEVEE STRUCTURE.

IT IS INTENDED THAT THE FINAL SECTION OF THE PROPOSED LEVEE SHALL FACILITATE RAPID DRAINAGE AWAY FROM THE LEVEE STRUCTURE.

SCALE: H : 1"=10'
V : 1"=10'

S&B INFRASTRUCTURE, LTD.
Engineering Management Technology
S&B Infrastructure, Ltd. Firm Registration Number: 1582

STATE OF TEXAS
PHILLIP J. PAWELEK
82739
REGISTERED PROFESSIONAL ENGINEER

The seal appearing on this document was authorized by PHILLIP J. PAWELEK P.E. 82739, on 6-11, 20 09

Phillip J. Pawelek, P.E.

NORTH FLOODWAY SOUTH (NFS1)
PROPOSED CROSS SECTIONS

SHEET 16 OF 60 SHEET

STATE	COUNTY	DRAWN BY: JL	CHECKED BY: JL	
TEXAS	HIDALGO	PROJECT NO. IBM09T0018		SHEET NO.
REHABILITATION OF NORTH FLOODWAY NORTH AND SOUTH LEVEES (FM 1015 - BASELINE RD.)				10.128

7:06:52 PM 6/10/2009 N:\Project\u0450\U045015\800\WorkingFiles\Dgn\0450NFS1sLVpxs02.dgn

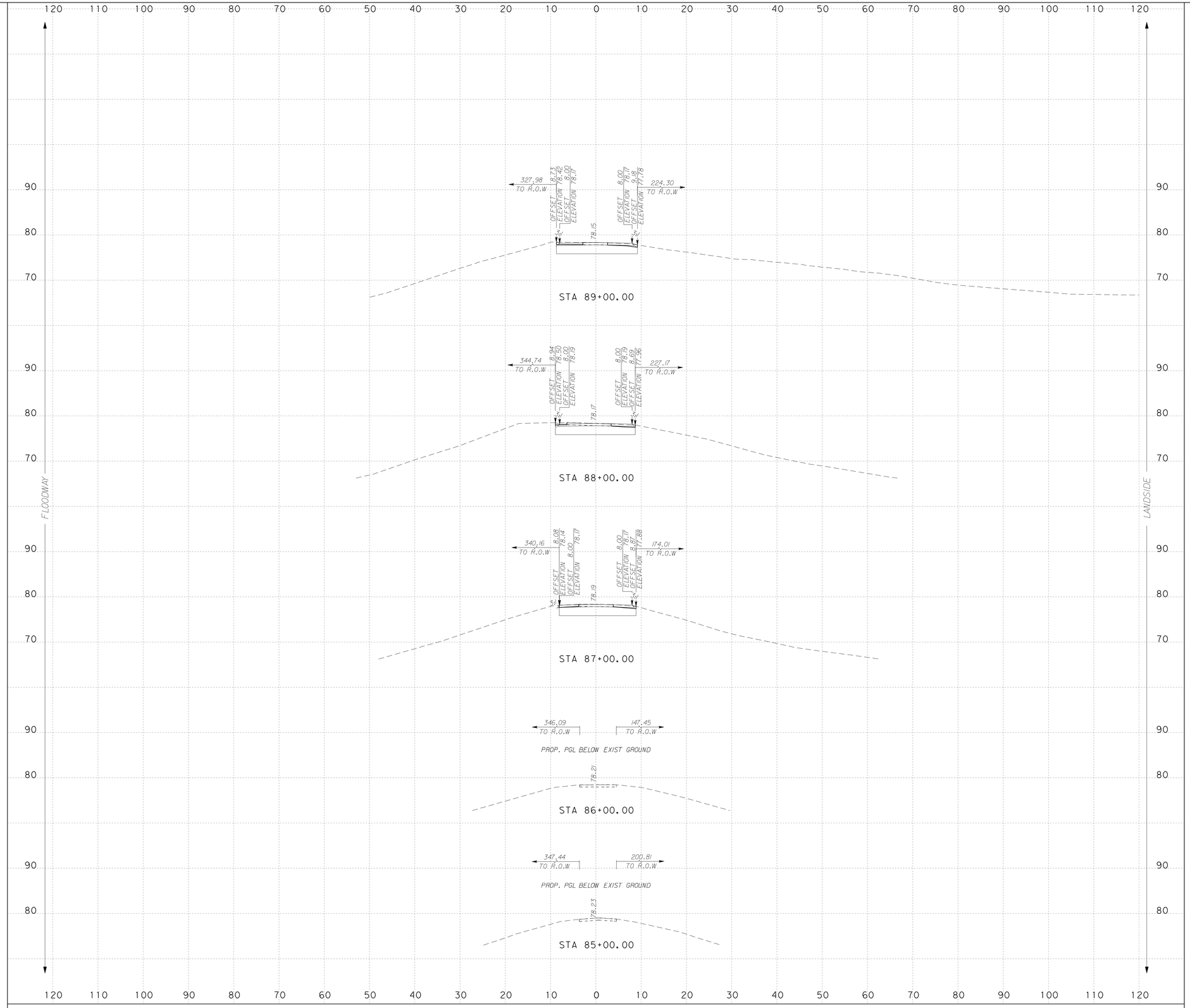

NOTES:

SURFACE DRAINAGE SHALL BE ESTABLISHED BY THE CONTRACTOR PRIOR TO AND DURING CONSTRUCTION TO PREVENT WATER FROM PONDING WITHIN OR ADJACENT TO THE LEVEE STRUCTURE.

IT IS INTENDED THAT THE FINAL SECTION OF THE PROPOSED LEVEE SHALL FACILITATE RAPID DRAINAGE AWAY FROM THE LEVEE STRUCTURE.

SCALE: H : 1"=10'
V : 1"=10'

S&B INFRASTRUCTURE, LTD.
Engineering Management Technology

S&B Infrastructure, Ltd. Firm Registration Number: 1582

STATE OF TEXAS
PHILLIP J. PAWELEK
82739
REGISTERED PROFESSIONAL ENGINEER

The seal appearing on this document was authorized by PHILLIP J. PAWELEK P.E. 82739, on 6-11, 2009

Phillip J. Pawelek, P.E.

NORTH FLOODWAY SOUTH (NFS1)
PROPOSED CROSS SECTIONS

SHEET 17 OF 60 SHEET

STATE	COUNTY	DRAWN BY: JL	CHECKED BY: JL	
TEXAS	HIDALGO	PROJECT NO. IBM09T0018		SHEET NO.
REHABILITATION OF NORTH FLOODWAY NORTH AND SOUTH LEVEES (FM 1015 - BASELINE RD.)				10.129

7:06:55 PM 6/10/2009 N:\Project\u0450\U045051\800\WorkingFiles\Dgn\0450NFS1sLVpxs02.dgn

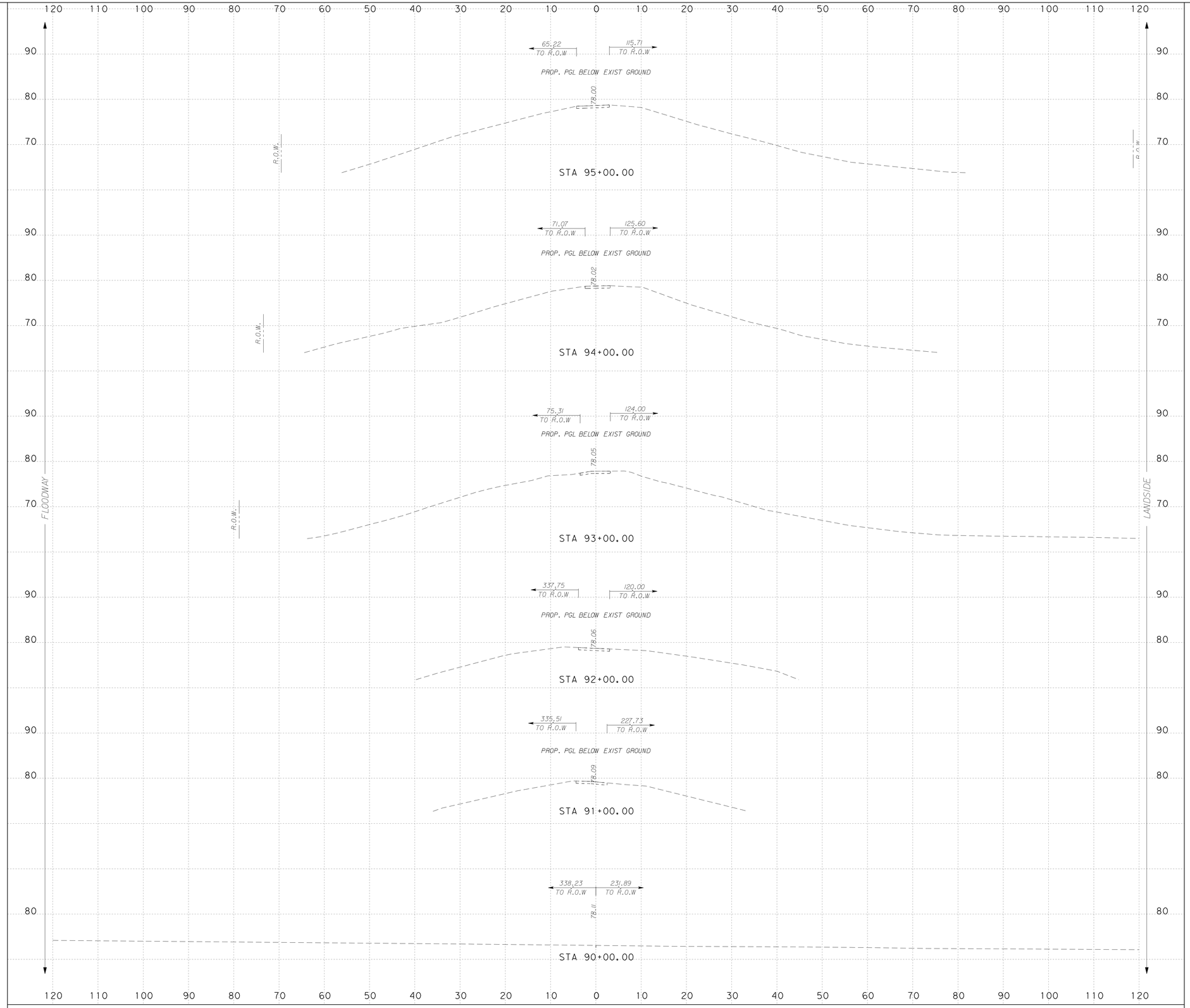

NOTES:

SURFACE DRAINAGE SHALL BE ESTABLISHED BY THE CONTRACTOR PRIOR TO AND DURING CONSTRUCTION TO PREVENT WATER FROM PONDING WITHIN OR ADJACENT TO THE LEVEE STRUCTURE.

IT IS INTENDED THAT THE FINAL SECTION OF THE PROPOSED LEVEE SHALL FACILITATE RAPID DRAINAGE AWAY FROM THE LEVEE STRUCTURE.

SCALE: H : 1"=10'
V : 1"=10'

INTERNATIONAL BOUNDARY AND WATER COMMISSION
COMISION INTERNACIONAL DE LIMITES Y AGUAS NORTE

S&B INFRASTRUCTURE, LTD.
Engineering Management Technology

S&B Infrastructure, Ltd. Firm Registration Number: 1582

STATE OF TEXAS
PHILLIP J. PAWELEK
82739
REGISTERED PROFESSIONAL ENGINEER

The seal appearing on this document was authorized by PHILLIP J. PAWELEK P.E. 82739, on 6-11, 2009.

Phillip J. Pawelek, P.E.

NORTH FLOODWAY SOUTH (NFS1) PROPOSED CROSS SECTIONS

SHEET 18 OF 60 SHEET

STATE	COUNTY	DRAWN BY: JL	CHECKED BY: JL	
TEXAS	HIDALGO	PROJECT NO. IBM09T0018		SHEET NO.
REHABILITATION OF NORTH FLOODWAY NORTH AND SOUTH LEVEES (FM 1015 - BASELINE RD.)				10.130

7:06:58 PM 6/10/2009 N:\Project\U0450\U045015\800*WorkingFiles\Dgn\0450NFS1sLVpxs02.dgn

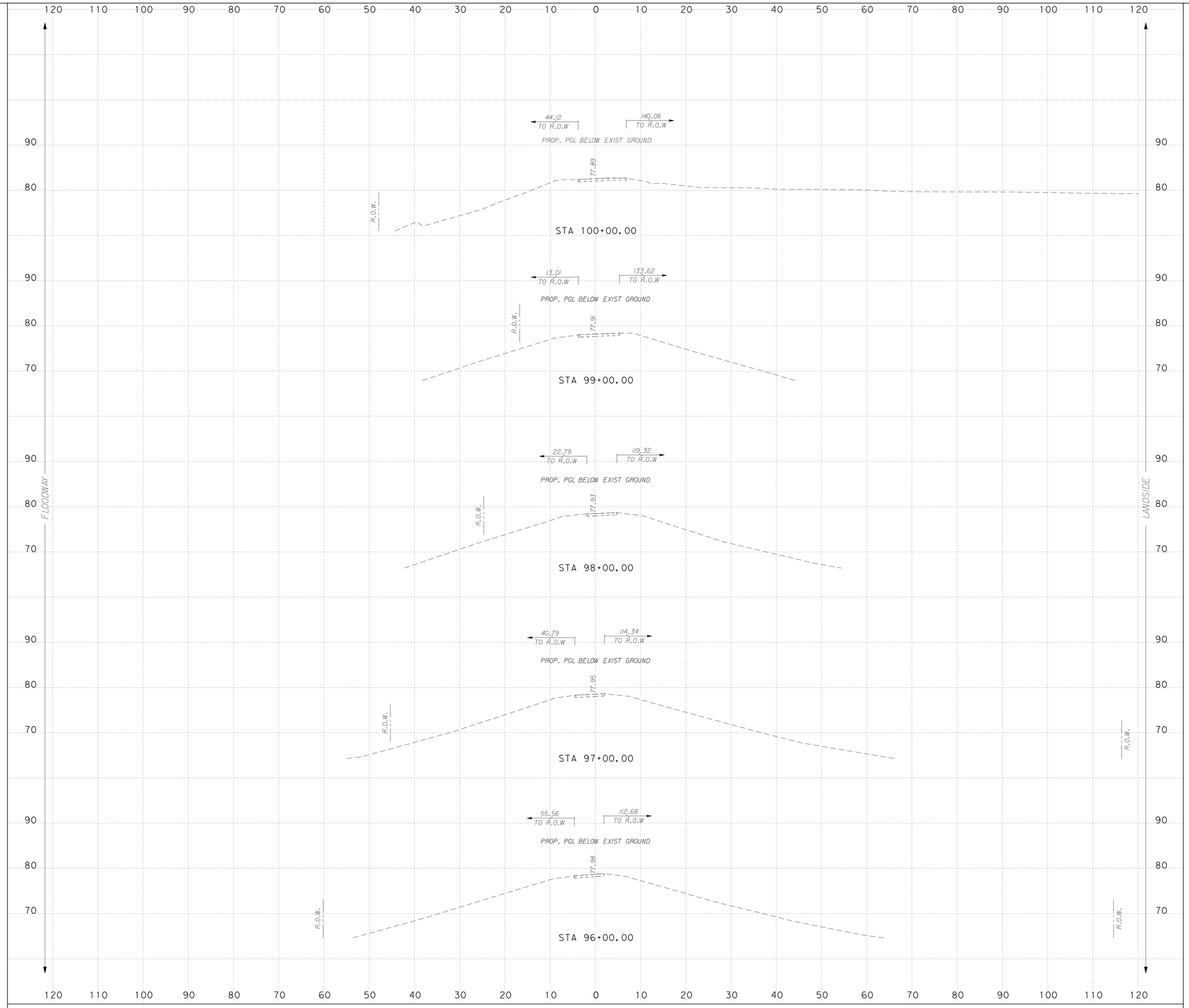

...\Dgn\0450NFS1sLVpxs02.dgn

NOTES:

SURFACE DRAINAGE SHALL BE ESTABLISHED BY THE CONTRACTOR PRIOR TO AND DURING CONSTRUCTION TO PREVENT WATER FROM PONDING WITHIN OR ADJACENT TO THE LEVEE STRUCTURE.

IT IS INTENDED THAT THE FINAL SECTION OF THE PROPOSED LEVEE SHALL FACILITATE RAPID DRAINAGE AWAY FROM THE LEVEE STRUCTURE.

SCALE: H : 1"=10'
V : 1"=10'

S&B INFRASTRUCTURE, LTD.
Engineering Management Technology
S&B Infrastructure, Ltd. Firm Registration Number: 1582

STATE OF TEXAS
PHILLIP J. PAWELEK
82739
REGISTERED PROFESSIONAL ENGINEER

The seal appearing on this document was authorized by PHILLIP J. PAWELEK P.E. 82739, on 6-11, 2009.

Phillip J. Pawelek, P.E.

NORTH FLOODWAY SOUTH (NFS1)
PROPOSED CROSS SECTIONS

SHEET 19 OF 60 SHEET

STATE	COUNTY	DRAWN BY: JL	CHECKED BY: JL	
TEXAS	HIDALGO	PROJECT NO. IBM09T0018		SHEET NO.
REHABILITATION OF NORTH FLOODWAY NORTH AND SOUTH LEVEES (FM 1015 - BASELINE RD.)				10.131

7:07:01 PM
6/10/2009
N:\Project\u0450\U0450S15\800*WorkingFiles\Dgn\0450NFS1sLVpxs02.dgn

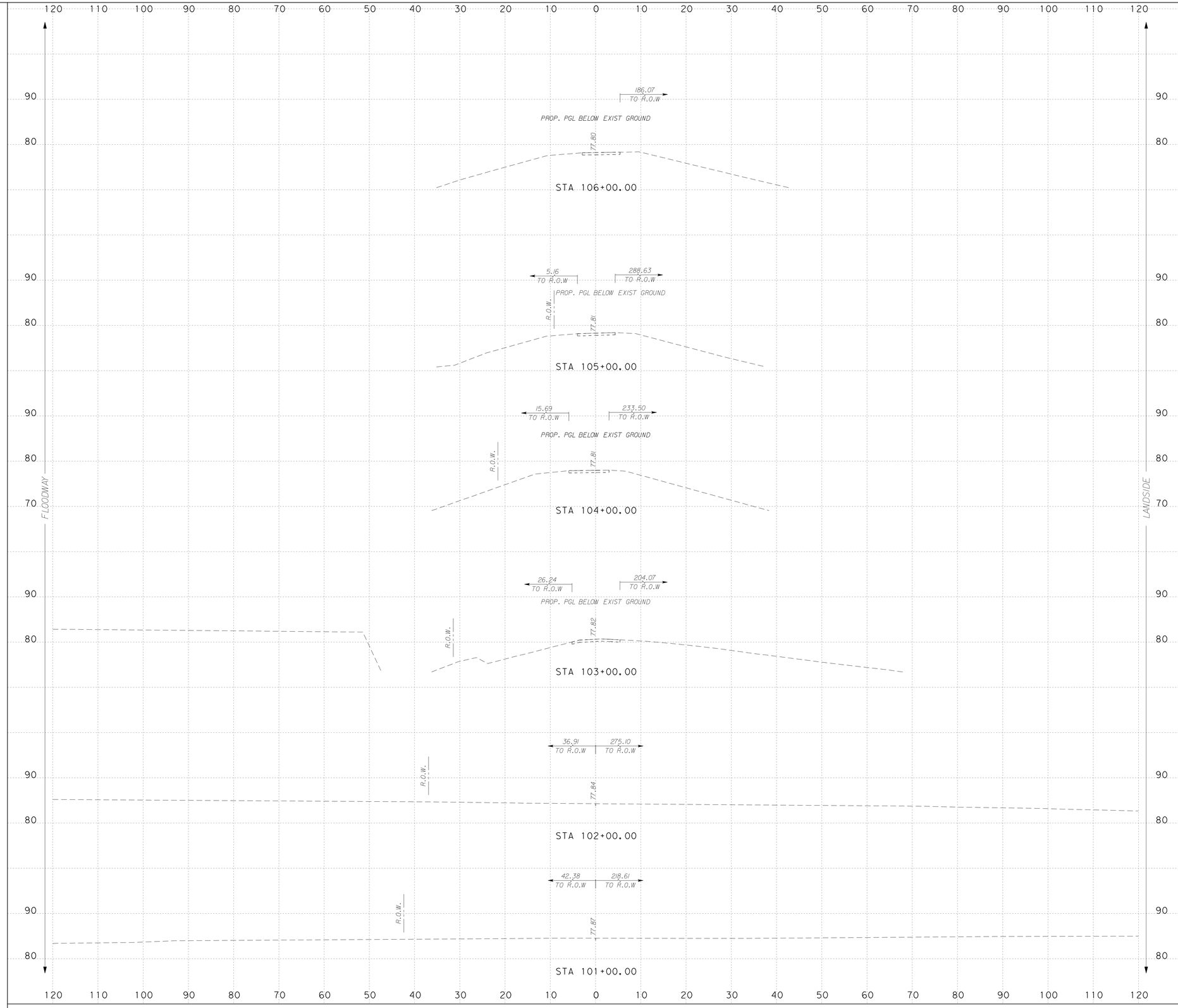

NOTES:

SURFACE DRAINAGE SHALL BE ESTABLISHED BY THE CONTRACTOR PRIOR TO AND DURING CONSTRUCTION TO PREVENT WATER FROM PONDING WITHIN OR ADJACENT TO THE LEVEE STRUCTURE.

IT IS INTENDED THAT THE FINAL SECTION OF THE PROPOSED LEVEE SHALL FACILITATE RAPID DRAINAGE AWAY FROM THE LEVEE STRUCTURE.

SCALE: H : 1"=10'
V : 1"=10'

S&B INFRASTRUCTURE, LTD.
Engineering Management Technology

S&B Infrastructure, Ltd. Firm Registration Number: 1582

STATE OF TEXAS
PHILLIP J. PAWELEK
82739
REGISTERED PROFESSIONAL ENGINEER

The seal appearing on this document was authorized by PHILLIP J. PAWELEK P.E. 82739, on 6-11, 2009

Phillip J. Pawelek, P.E.

NORTH FLOODWAY SOUTH (NFS1)
PROPOSED CROSS SECTIONS

SHEET 20 OF 60 SHEET

STATE	COUNTY	DRAWN BY: JL	CHECKED BY: JL	
TEXAS	HIDALGO	PROJECT NO. IBM09T0018		SHEET NO.
REHABILITATION OF NORTH FLOODWAY NORTH AND SOUTH LEVEES (FM 1015 - BASELINE RD.)				10.132

7:09:04 PM 6/10/2009 N:\Project\u0450\U045051S\800\WorkingFiles\Dgn\0450NFS1sLVpxs02.dgn

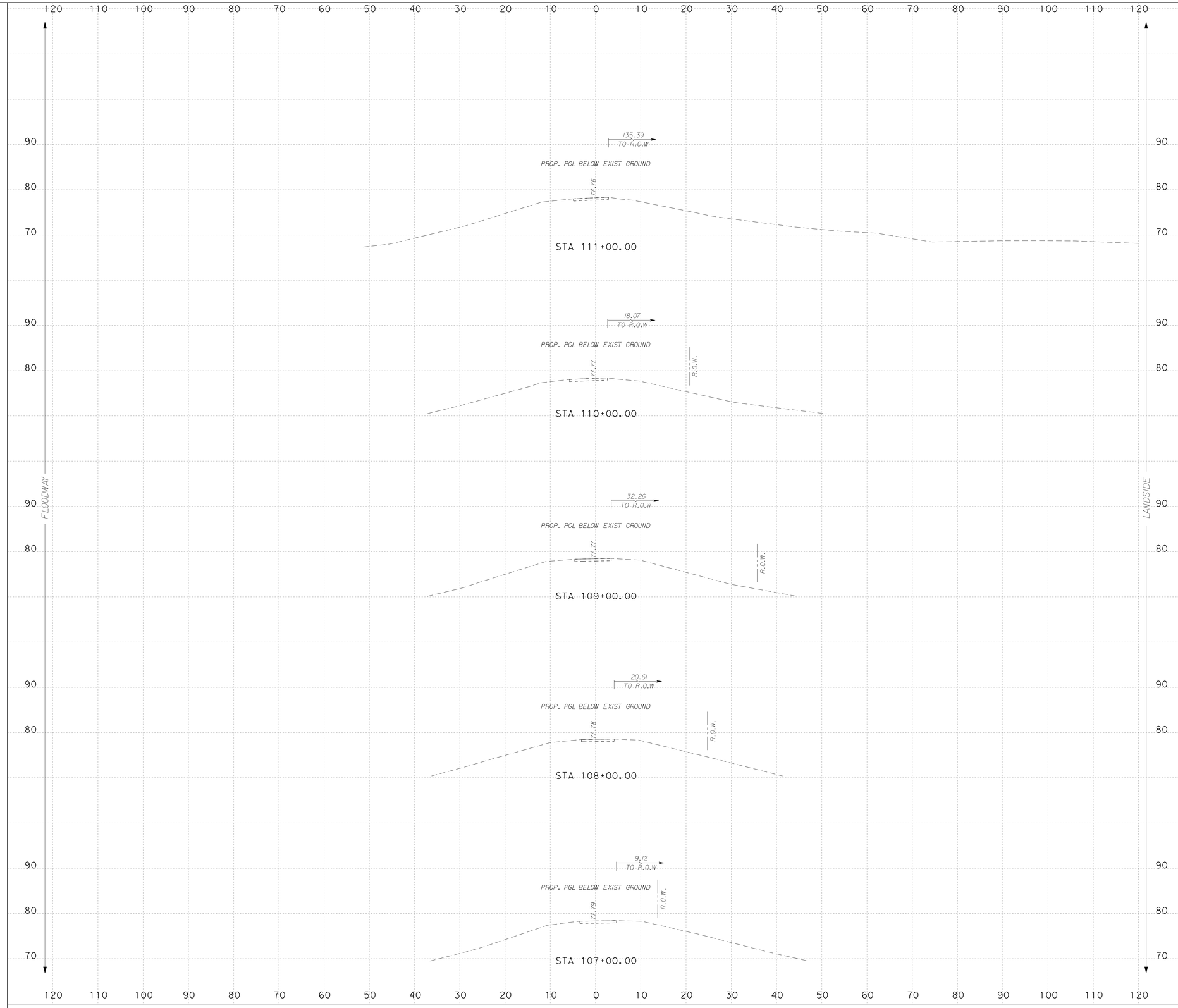

...\Dgn\0450NFS1sLVpxs02.dgn

NOTES:

SURFACE DRAINAGE SHALL BE ESTABLISHED BY THE CONTRACTOR PRIOR TO AND DURING CONSTRUCTION TO PREVENT WATER FROM PONDING WITHIN OR ADJACENT TO THE LEVEE STRUCTURE.

IT IS INTENDED THAT THE FINAL SECTION OF THE PROPOSED LEVEE SHALL FACILITATE RAPID DRAINAGE AWAY FROM THE LEVEE STRUCTURE.

SCALE: H : 1"=10'
V : 1"=10'

S&B INFRASTRUCTURE, LTD.
Engineering Management Technology

S&B Infrastructure, Ltd. Firm Registration Number: 1582

STATE OF TEXAS
PHILLIP J. PAWELEK
82739
REGISTERED PROFESSIONAL ENGINEER

The seal appearing on this document was authorized by PHILLIP J. PAWELEK P.E. 82739, on 6-11, 2009.

Phillip J. Pawelek, P.E.

NORTH FLOODWAY SOUTH (NFS1)
PROPOSED CROSS SECTIONS

SHEET 21 OF 60 SHEET

STATE	COUNTY	DRAWN BY: JL	CHECKED BY: JL	
TEXAS	HIDALGO	PROJECT NO. IBM09T0018		SHEET NO.
REHABILITATION OF NORTH FLOODWAY NORTH AND SOUTH LEVEES (FM 1015 - BASELINE RD.)				10.133

7:07:06 PM
6/10/2009
N:\Project\u0450\U0450515\800*WorkingFiles\Dgn\0450NFS1sLVpxs02.dgn

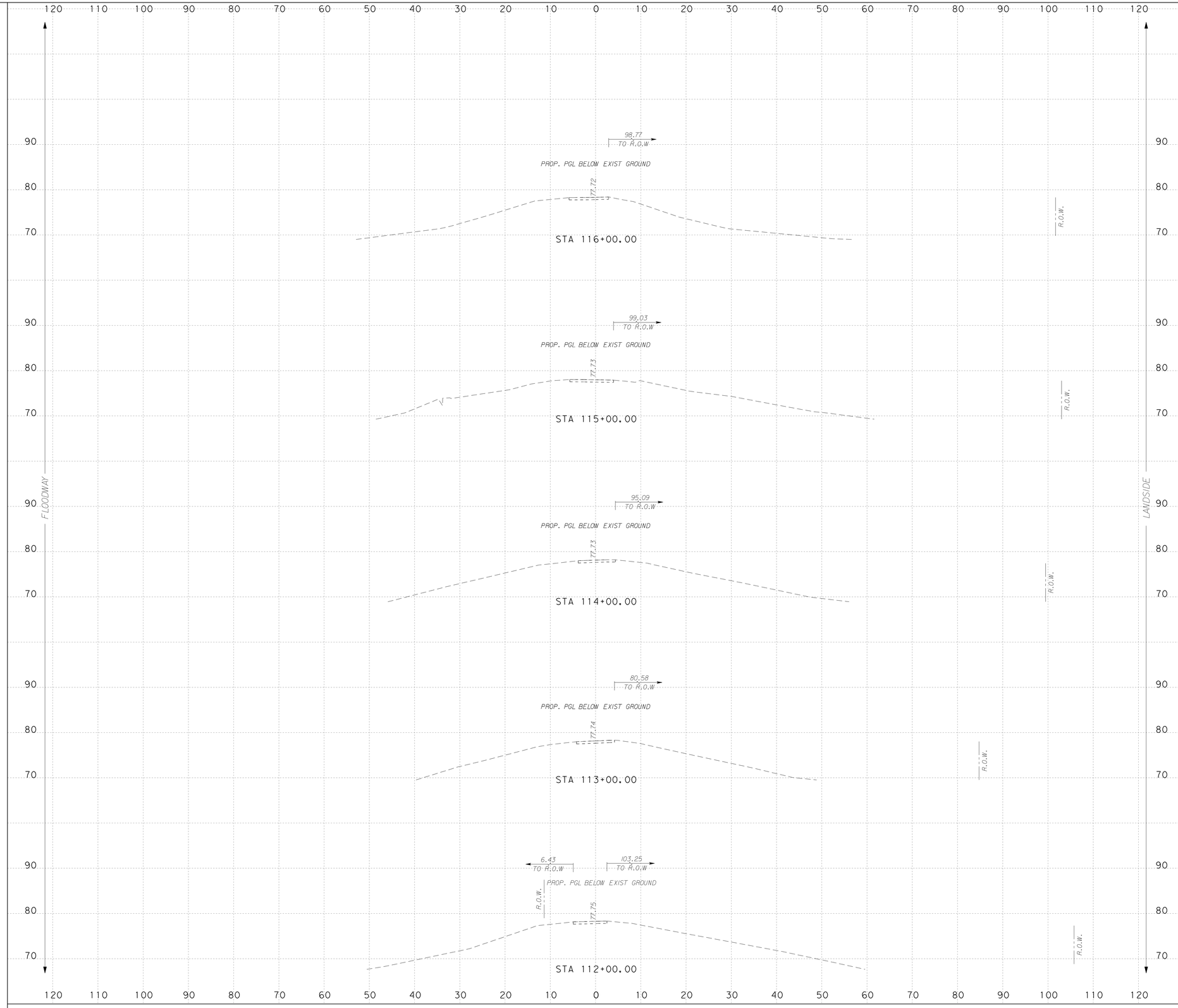

...\Dgn\0450NFS1sLVpxs02.dgn

NOTES:

SURFACE DRAINAGE SHALL BE ESTABLISHED BY THE CONTRACTOR PRIOR TO AND DURING CONSTRUCTION TO PREVENT WATER FROM PONDING WITHIN OR ADJACENT TO THE LEVEE STRUCTURE.

IT IS INTENDED THAT THE FINAL SECTION OF THE PROPOSED LEVEE SHALL FACILITATE RAPID DRAINAGE AWAY FROM THE LEVEE STRUCTURE.

SCALE: H : 1"=10'
V : 1"=10'

S&B INFRASTRUCTURE, LTD.
Engineering Management Technology

S&B Infrastructure, Ltd. Firm Registration Number: 1582

STATE OF TEXAS
PHILLIP J. PAWELEK
82739
REGISTERED PROFESSIONAL ENGINEER

The seal appearing on this document was authorized by PHILLIP J. PAWELEK P.E. 82739, on 6-11, 2009.

Phillip J. Pawelek, P.E.

NORTH FLOODWAY SOUTH (NFS1)
PROPOSED CROSS SECTIONS

SHEET 22 OF 60 SHEET

STATE	COUNTY	DRAWN BY: JL	CHECKED BY: JL	
TEXAS	HIDALGO	PROJECT NO. IBM09T0018		SHEET NO.
REHABILITATION OF NORTH FLOODWAY NORTH AND SOUTH LEVEES (FM 1015 - BASELINE RD.)				10.134

7:07:09 PM
6/10/2009
N:\Project\u0450\U0450515\800*WorkingFiles\Dgn\0450NFS1sLVpxs02.dgn

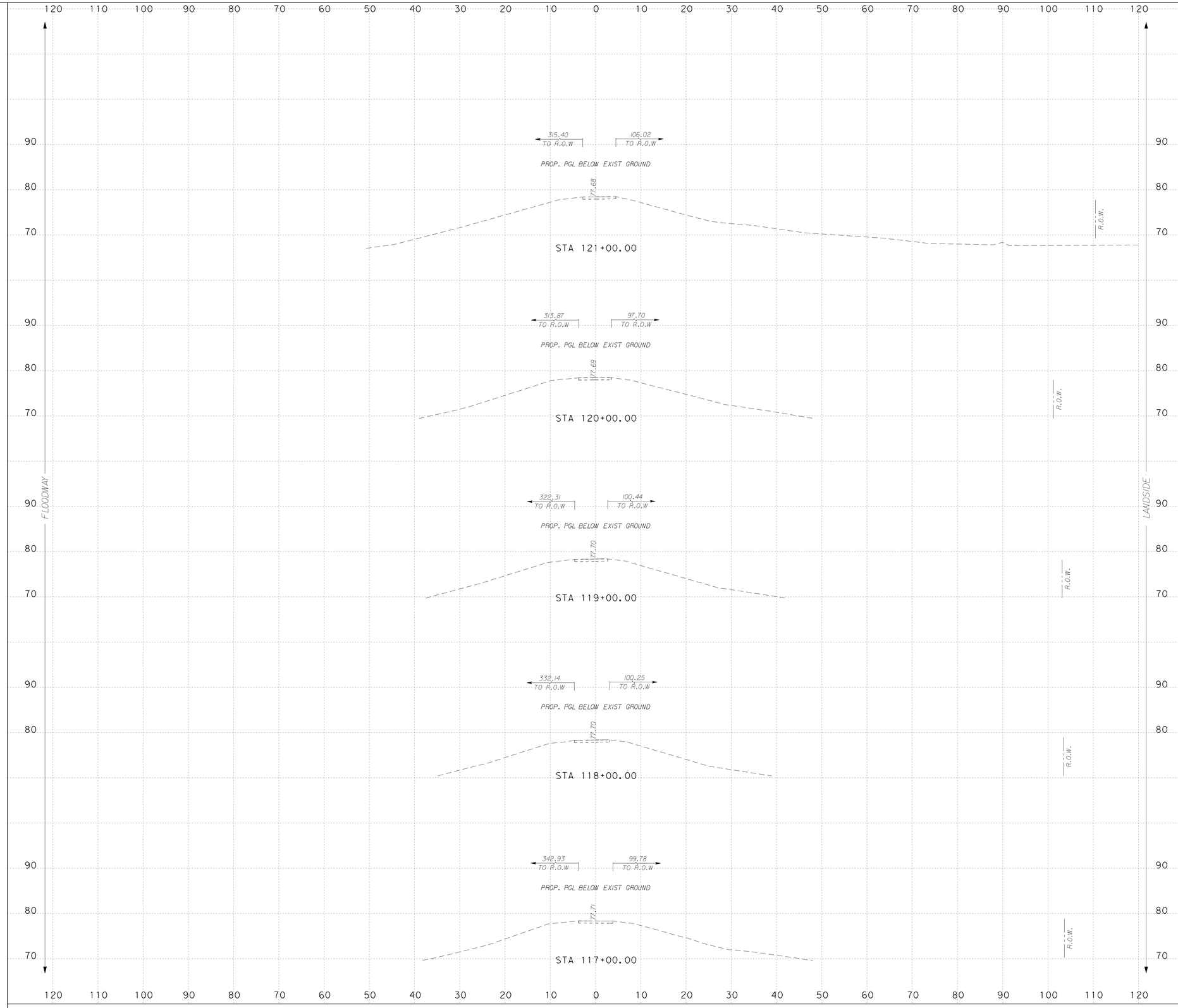

...\Dgn\0450NFS1sLVpxs02.dgn

NOTES:

SURFACE DRAINAGE SHALL BE ESTABLISHED BY THE CONTRACTOR PRIOR TO AND DURING CONSTRUCTION TO PREVENT WATER FROM PONDING WITHIN OR ADJACENT TO THE LEVEE STRUCTURE.

IT IS INTENDED THAT THE FINAL SECTION OF THE PROPOSED LEVEE SHALL FACILITATE RAPID DRAINAGE AWAY FROM THE LEVEE STRUCTURE.

SCALE: H : 1"=10'
V : 1"=10'

S&B INFRASTRUCTURE, LTD.
Engineering Management Technology

S&B Infrastructure, Ltd. Firm Registration Number: 1582

STATE OF TEXAS
PHILLIP J. PAWELEK
82739
REGISTERED PROFESSIONAL ENGINEER

The seal appearing on this document was authorized by PHILLIP J. PAWELEK P.E. 82739, on 6-11, 2009.

Phillip J. Pawelek, P.E.

NORTH FLOODWAY SOUTH (NFS1)
PROPOSED CROSS SECTIONS

SHEET 23 OF 60 SHEET

STATE	COUNTY	DRAWN BY: JL	CHECKED BY: JL	
TEXAS	HIDALGO	PROJECT NO. IBM09T0018		SHEET NO.
REHABILITATION OF NORTH FLOODWAY NORTH AND SOUTH LEVEES (FM 1015 - BASELINE RD.)				10.135

7:07:12 PM
6/10/2009
N:\Project\u0450\U0450515\800*WorkingFiles\Dgn\0450NFS1sLVpxs02.dgn

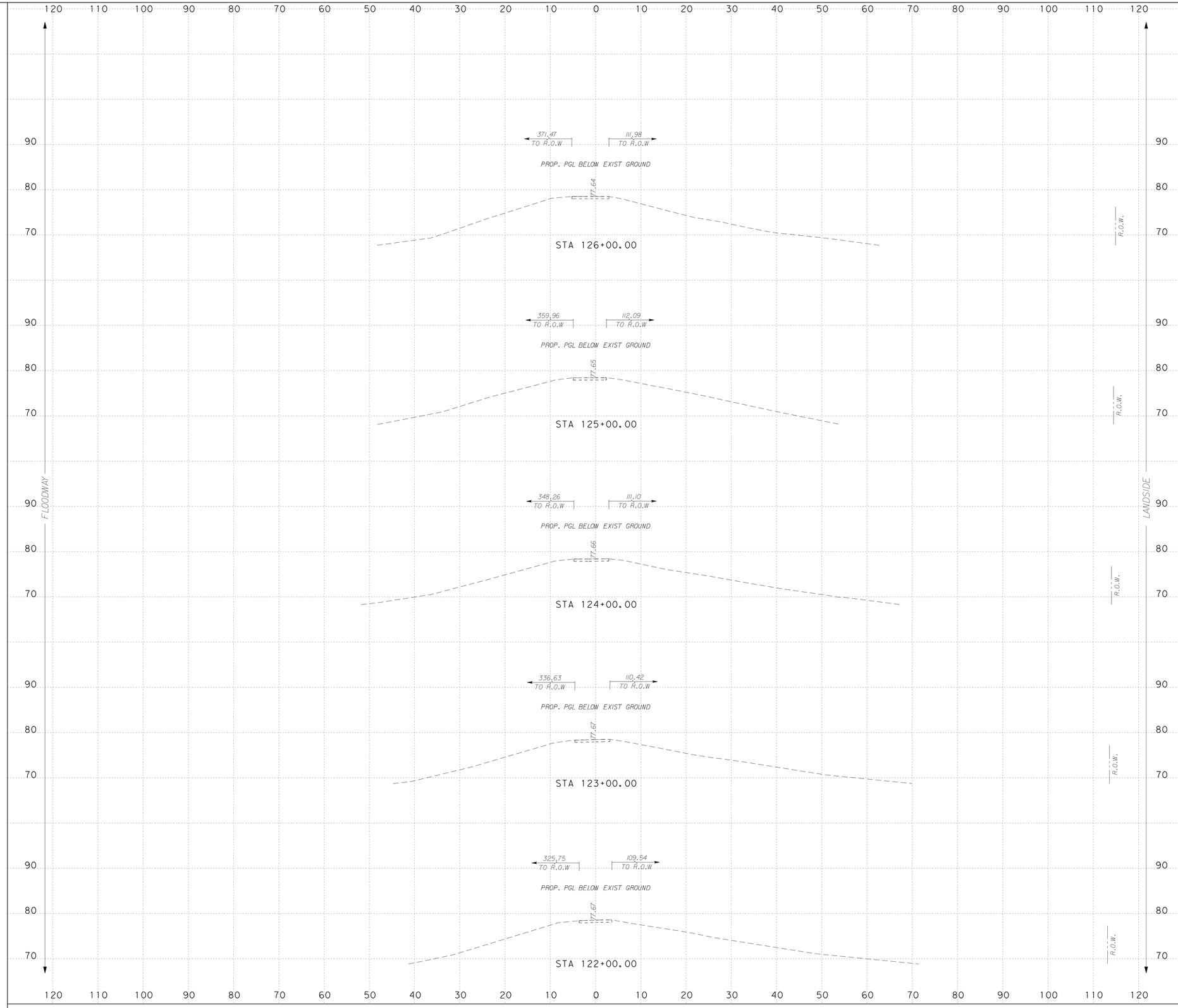

NOTES:

SURFACE DRAINAGE SHALL BE ESTABLISHED BY THE CONTRACTOR PRIOR TO AND DURING CONSTRUCTION TO PREVENT WATER FROM PONDING WITHIN OR ADJACENT TO THE LEVEE STRUCTURE.

IT IS INTENDED THAT THE FINAL SECTION OF THE PROPOSED LEVEE SHALL FACILITATE RAPID DRAINAGE AWAY FROM THE LEVEE STRUCTURE.

SCALE: H : 1"=10'
V : 1"=10'

S&B INFRASTRUCTURE, LTD.
Engineering Management Technology

S&B Infrastructure, Ltd. Firm Registration Number: 1582

STATE OF TEXAS
PHILLIP J. PAWELEK
82739
REGISTERED PROFESSIONAL ENGINEER

The seal appearing on this document was authorized by PHILLIP J. PAWELEK P.E. 82739, on 6-11, 2009

Phillip J. Pawelek, P.E.

NORTH FLOODWAY SOUTH (NFS1)
PROPOSED CROSS SECTIONS

SHEET 24 OF 60 SHEET

STATE	COUNTY	DRAWN BY: JL	CHECKED BY: JL	
TEXAS	HIDALGO	PROJECT NO. IBM09T0018		SHEET NO.
REHABILITATION OF NORTH FLOODWAY NORTH AND SOUTH LEVEES (FM 1015 - BASELINE RD.)				10.136

7:07:15 PM 6/10/2009
N:\Project\u0450\U045051S\800\WorkingFiles\Dgn\0450NFS1sLVpxs02.dgn

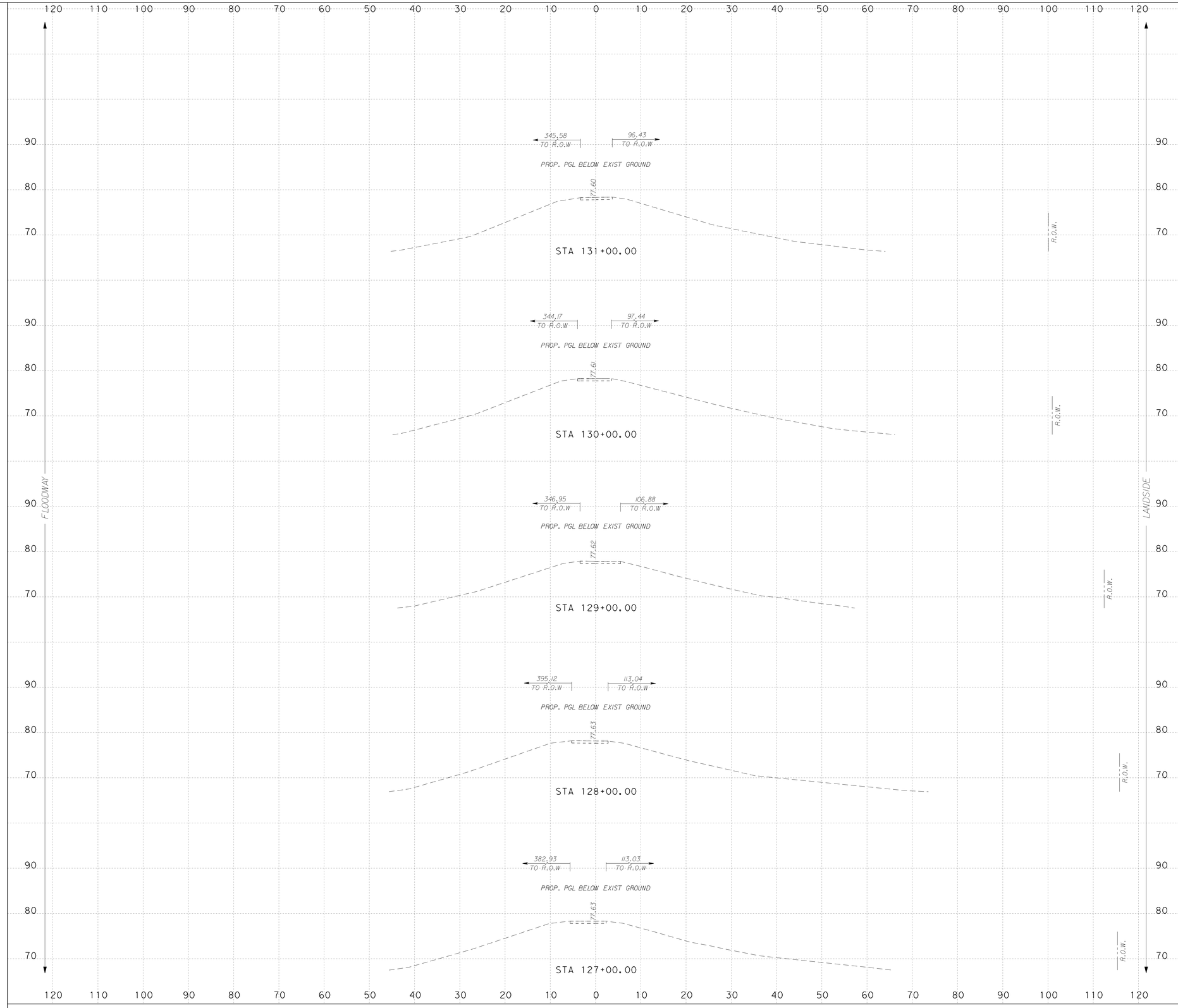

NOTES:

SURFACE DRAINAGE SHALL BE ESTABLISHED BY THE CONTRACTOR PRIOR TO AND DURING CONSTRUCTION TO PREVENT WATER FROM PONDING WITHIN OR ADJACENT TO THE LEVEE STRUCTURE.

IT IS INTENDED THAT THE FINAL SECTION OF THE PROPOSED LEVEE SHALL FACILITATE RAPID DRAINAGE AWAY FROM THE LEVEE STRUCTURE.

SCALE: H : 1"=10'
V : 1"=10'

S&B INFRASTRUCTURE, LTD.
Engineering Management Technology
S&B Infrastructure, Ltd. Firm Registration Number: 1582

STATE OF TEXAS
PHILLIP J. PAWELEK
82739
REGISTERED PROFESSIONAL ENGINEER

The seal appearing on this document was authorized by PHILLIP J. PAWELEK P.E. 82739, on 6-11, 2009

Phillip J. Pawelek, P.E.

NORTH FLOODWAY SOUTH (NFS1)
PROPOSED CROSS SECTIONS

SHEET 25 OF 60 SHEET

STATE	COUNTY	DRAWN BY: JL	CHECKED BY: JL	
TEXAS	HIDALGO	PROJECT NO. IBM09T0018		SHEET NO.
REHABILITATION OF NORTH FLOODWAY NORTH AND SOUTH LEVEES (FM 1015 - BASELINE RD.)				10.137

7:07:18 PM 6/10/2009 N:\Project\u0450\U045051S\800\WorkingFiles\Dgn\0450NFS1sLVpxs02.dgn

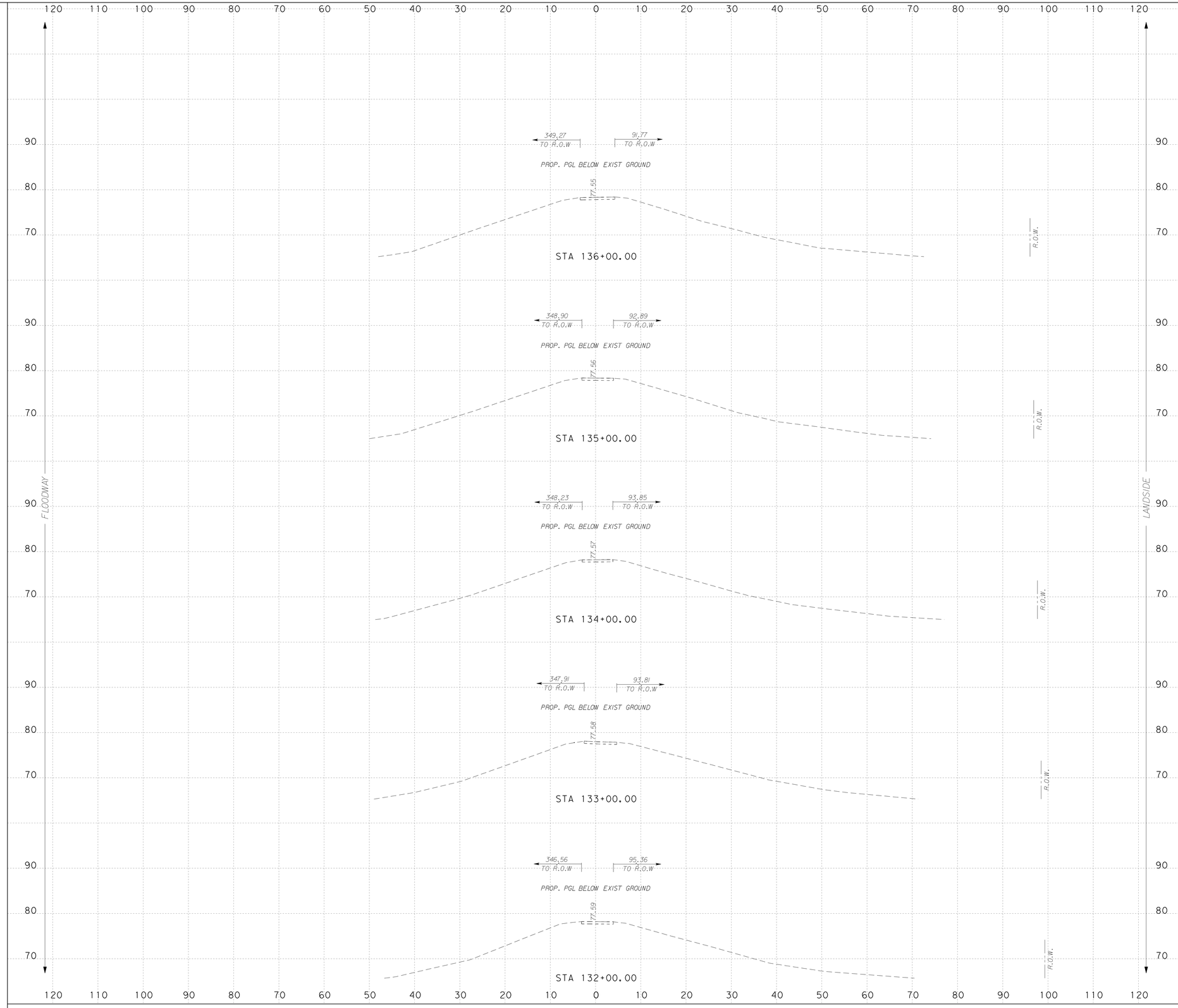

...\Dgn\0450NFS1sLVpxs02.dgn

NOTES:

SURFACE DRAINAGE SHALL BE ESTABLISHED BY THE CONTRACTOR PRIOR TO AND DURING CONSTRUCTION TO PREVENT WATER FROM PONDING WITHIN OR ADJACENT TO THE LEVEE STRUCTURE.

IT IS INTENDED THAT THE FINAL SECTION OF THE PROPOSED LEVEE SHALL FACILITATE RAPID DRAINAGE AWAY FROM THE LEVEE STRUCTURE.

SCALE: H : 1"=10'
V : 1"=10'

S&B INFRASTRUCTURE, LTD.
Engineering Management Technology

S&B Infrastructure, Ltd. Firm Registration Number: 1582

STATE OF TEXAS
PHILLIP J. PAWELEK
82739
REGISTERED PROFESSIONAL ENGINEER

The seal appearing on this document was authorized by PHILLIP J. PAWELEK P.E. 82739, on 6-11, 2009.

Phillip J. Pawelek, P.E.

NORTH FLOODWAY SOUTH (NFS1)
PROPOSED CROSS SECTIONS

SHEET 26 OF 60 SHEET

STATE	COUNTY	DRAWN BY: JL	CHECKED BY: JL	
TEXAS	HIDALGO	PROJECT NO. IBM09T0018		SHEET NO.
REHABILITATION OF NORTH FLOODWAY NORTH AND SOUTH LEVEES (FM 1015 - BASELINE RD.)				10.138

7:07:21 PM
6/10/2009
N:\Project\u0450\U0450515\800*WorkingFiles\Dgn\0450NFS1sLVpxs02.dgn

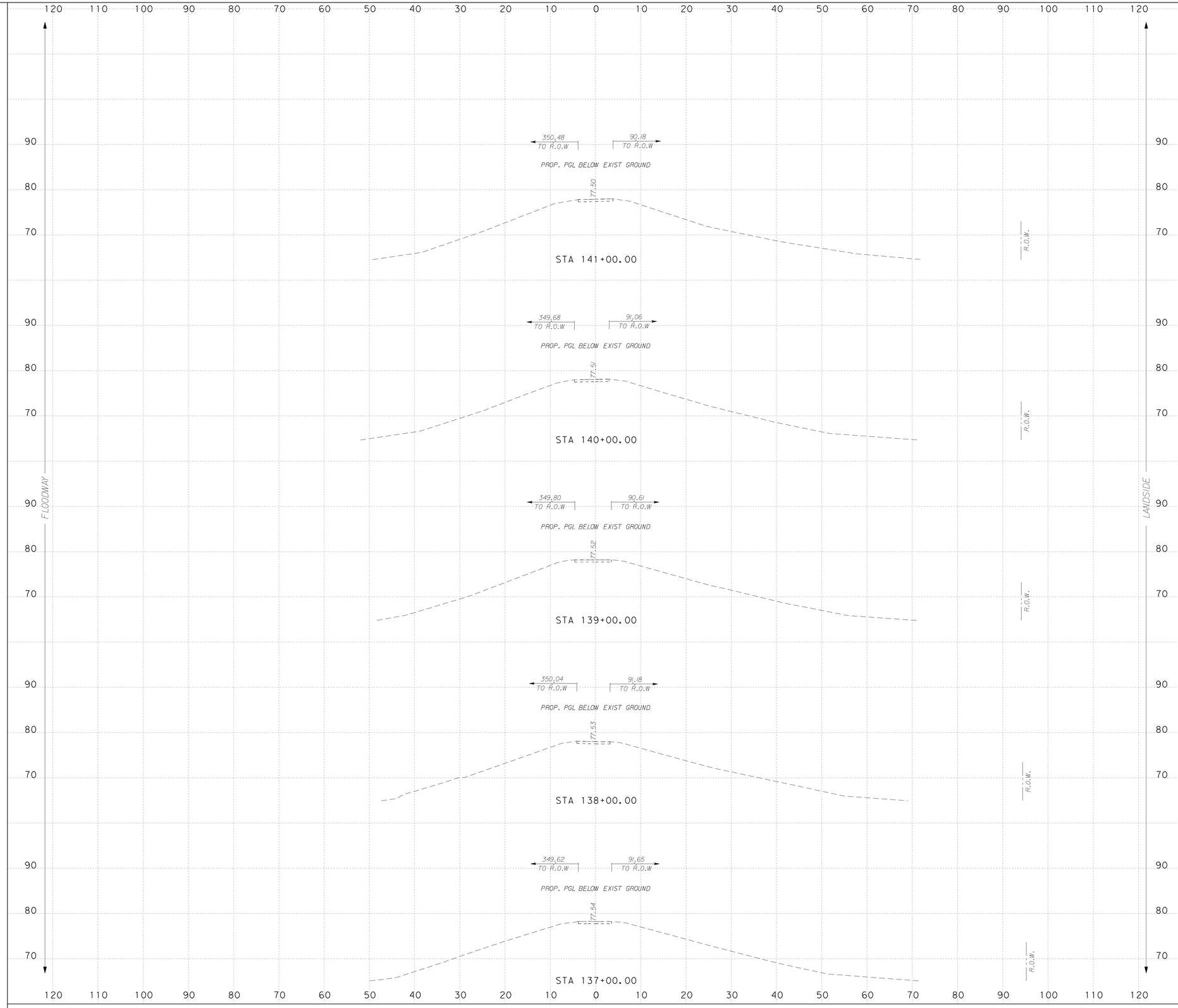

NOTES:

SURFACE DRAINAGE SHALL BE ESTABLISHED BY THE CONTRACTOR PRIOR TO AND DURING CONSTRUCTION TO PREVENT WATER FROM PONDING WITHIN OR ADJACENT TO THE LEVEE STRUCTURE.

IT IS INTENDED THAT THE FINAL SECTION OF THE PROPOSED LEVEE SHALL FACILITATE RAPID DRAINAGE AWAY FROM THE LEVEE STRUCTURE.

SCALE: H : 1"=10'
V : 1"=10'

S&B INFRASTRUCTURE, LTD.
Engineering Management Technology
S&B Infrastructure, Ltd. Firm Registration Number: 1582

STATE OF TEXAS
PHILLIP J. PAWELEK
82739
REGISTERED PROFESSIONAL ENGINEER

The seal appearing on this document was authorized by PHILLIP J. PAWELEK P.E. 82739, on 6-11, 2009

Phillip J. Pawelek, P.E.

NORTH FLOODWAY SOUTH (NFS1) PROPOSED CROSS SECTIONS

SHEET 27 OF 60 SHEET

STATE	COUNTY	DRAWN BY: JL	CHECKED BY: JL	
TEXAS	HIDALGO	PROJECT NO. IBM09T0018		SHEET NO.
REHABILITATION OF NORTH FLOODWAY NORTH AND SOUTH LEVEES (FM 1015 - BASELINE RD.)				10.139

7:07:24 PM 6/10/2009
N:\Project\u0450\U045051\800\WorkingFiles\Dgn\0450NFS1sLVpxs02.dgn

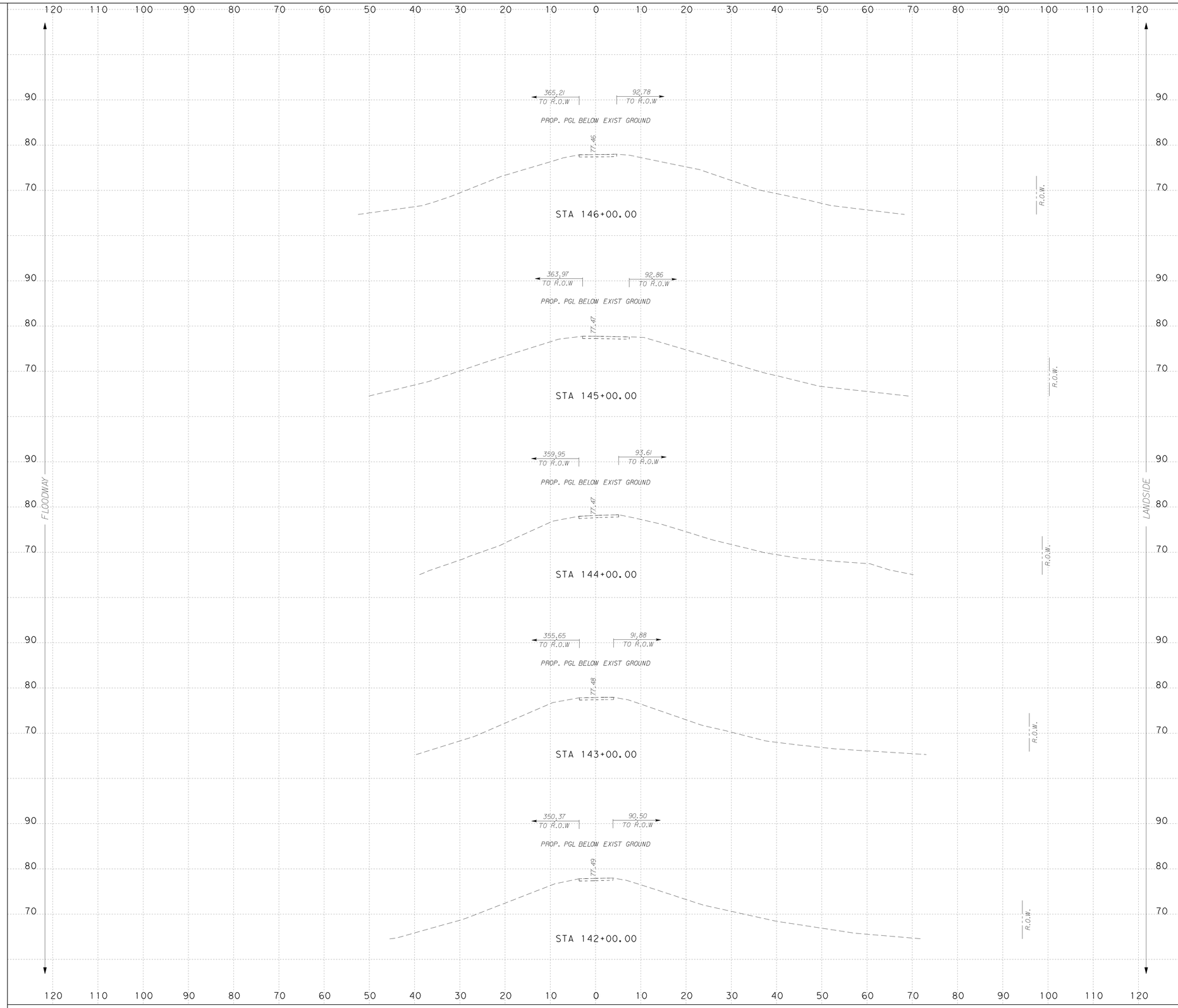

NOTES:

SURFACE DRAINAGE SHALL BE ESTABLISHED BY THE CONTRACTOR PRIOR TO AND DURING CONSTRUCTION TO PREVENT WATER FROM PONDING WITHIN OR ADJACENT TO THE LEVEE STRUCTURE.

IT IS INTENDED THAT THE FINAL SECTION OF THE PROPOSED LEVEE SHALL FACILITATE RAPID DRAINAGE AWAY FROM THE LEVEE STRUCTURE.

SCALE: H : 1"=10'
V : 1"=10'

S&B INFRASTRUCTURE, LTD.
Engineering Management Technology
S&B Infrastructure, Ltd. Firm Registration Number: 1582

STATE OF TEXAS
PHILLIP J. PAWELEK
82739
REGISTERED PROFESSIONAL ENGINEER

The seal appearing on this document was authorized by PHILLIP J. PAWELEK P.E. 82739, on 6-11, 2009.

Phillip J. Pawelek, P.E.

NORTH FLOODWAY SOUTH (NFS1)
PROPOSED CROSS SECTIONS

SHEET 28 OF 60 SHEET

STATE	COUNTY	DRAWN BY: JL	CHECKED BY: JL	
TEXAS	HIDALGO	PROJECT NO. IBM09T0018		SHEET NO.
REHABILITATION OF NORTH FLOODWAY NORTH AND SOUTH LEVEES (FM 1015 - BASELINE RD.)				10.140

7:01:27 PM 6/10/2009
N:\Projects\0450\0450515\800\WorkingFiles\Dgn\0450NFS1sLVpxs02.dgn

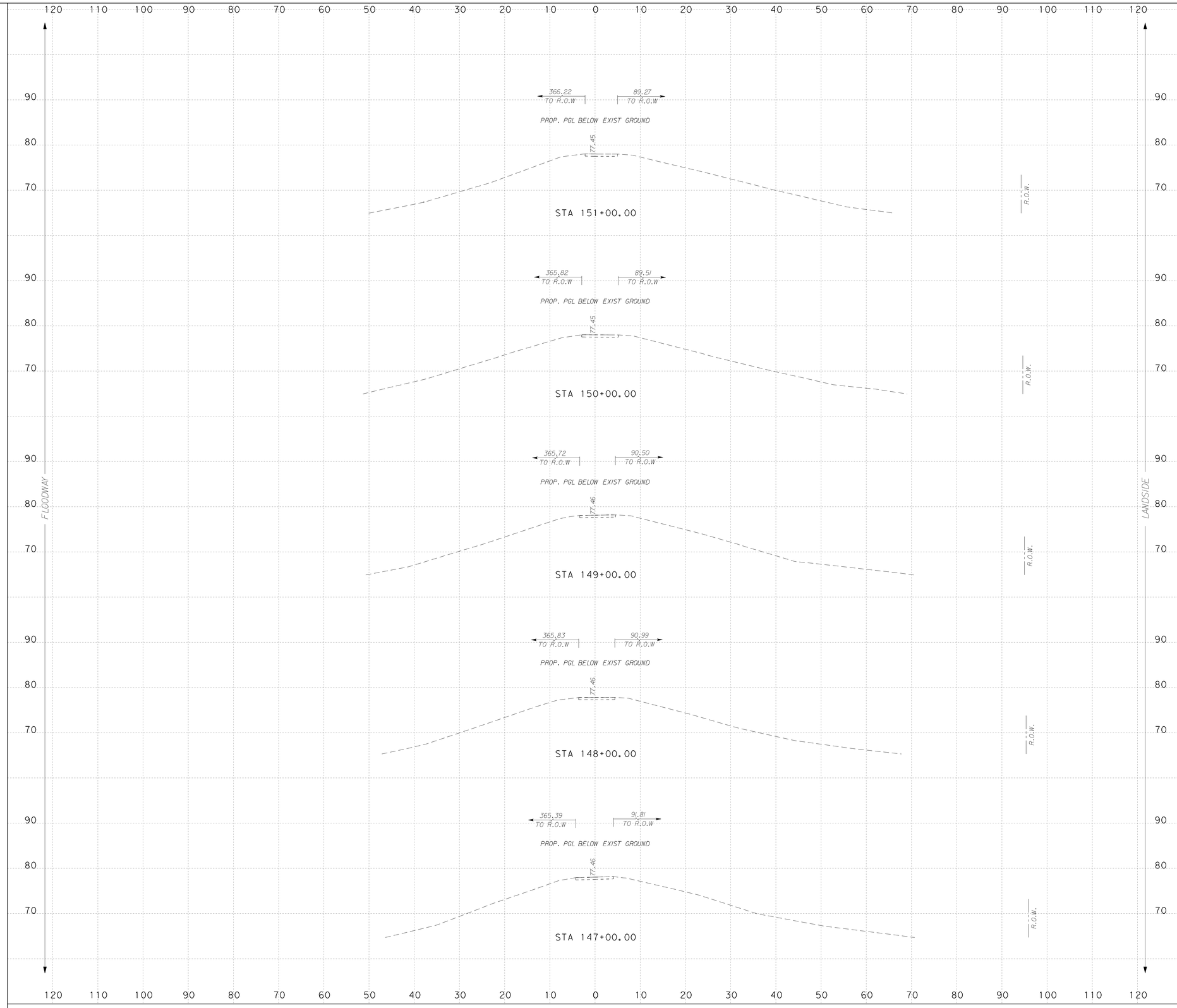

...\Dgn\0450NFS1sLVpxs02.dgn

NOTES:

SURFACE DRAINAGE SHALL BE ESTABLISHED BY THE CONTRACTOR PRIOR TO AND DURING CONSTRUCTION TO PREVENT WATER FROM PONDING WITHIN OR ADJACENT TO THE LEVEE STRUCTURE.

IT IS INTENDED THAT THE FINAL SECTION OF THE PROPOSED LEVEE SHALL FACILITATE RAPID DRAINAGE AWAY FROM THE LEVEE STRUCTURE.

SCALE: H : 1"=10'
V : 1"=10'

S&B INFRASTRUCTURE, LTD.
Engineering Management Technology
S&B Infrastructure, Ltd. Firm Registration Number: 1582

STATE OF TEXAS
PHILLIP J. PAWELEK
82739
REGISTERED PROFESSIONAL ENGINEER

The seal appearing on this document was authorized by PHILLIP J. PAWELEK P.E. 82739, on 6-11, 2009.

Phillip J. Pawelek, P.E.

NORTH FLOODWAY SOUTH (NFS1) PROPOSED CROSS SECTIONS

SHEET 29 OF 60 SHEET

STATE	COUNTY	DRAWN BY: JL	CHECKED BY: JL	
TEXAS	HIDALGO	PROJECT NO. IBM09T0018		SHEET NO.
REHABILITATION OF NORTH FLOODWAY NORTH AND SOUTH LEVEES (FM 1015 - BASELINE RD.)				10.141

7:07:29 PM
6/10/2009
N:\Project\u0450\U0450515\800*WorkingFiles\Dgn\0450NFS1sLVpxs02.dgn

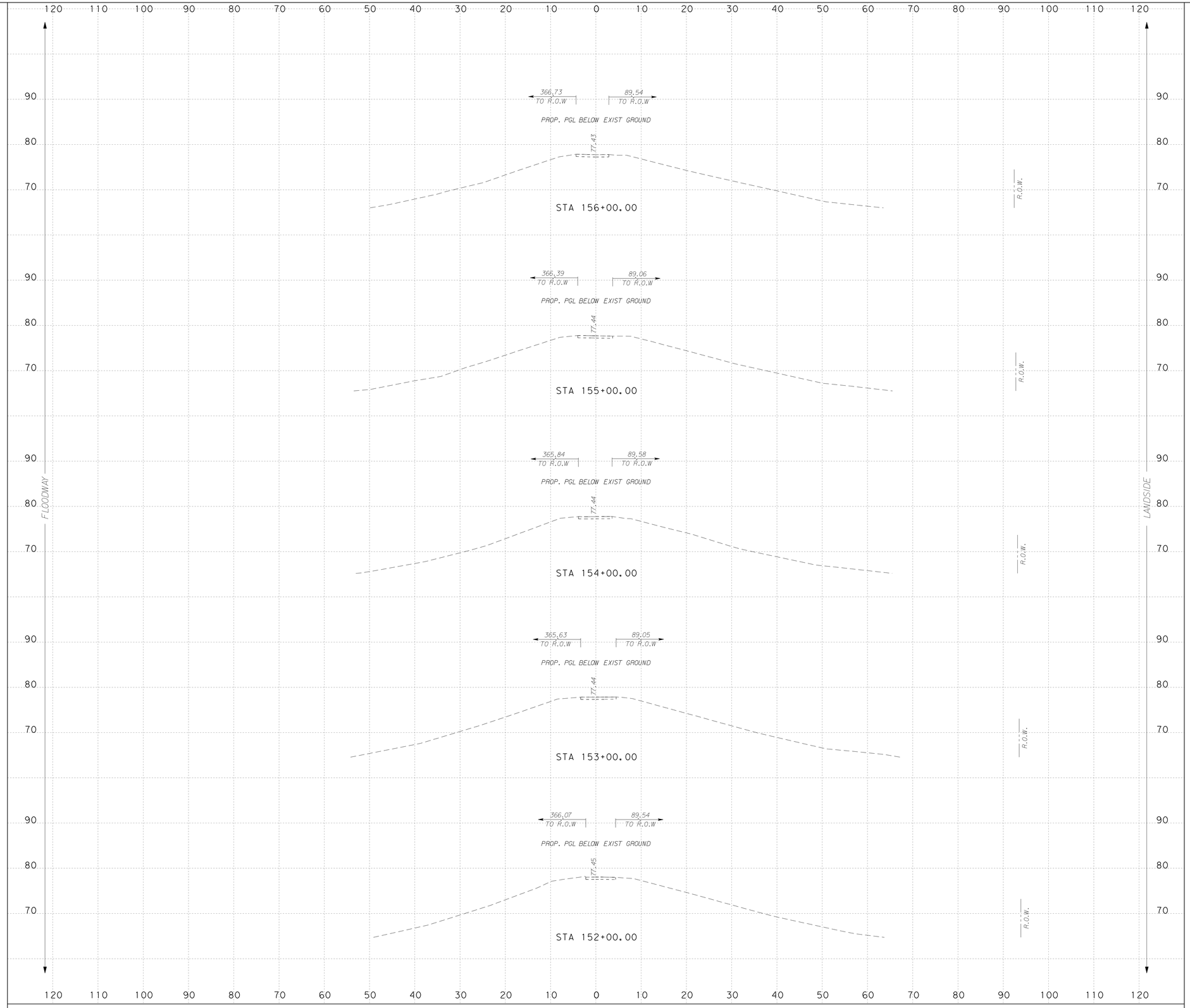

NOTES:

SURFACE DRAINAGE SHALL BE ESTABLISHED BY THE CONTRACTOR PRIOR TO AND DURING CONSTRUCTION TO PREVENT WATER FROM PONDING WITHIN OR ADJACENT TO THE LEVEE STRUCTURE.

IT IS INTENDED THAT THE FINAL SECTION OF THE PROPOSED LEVEE SHALL FACILITATE RAPID DRAINAGE AWAY FROM THE LEVEE STRUCTURE.

SCALE: H : 1"=10'
V : 1"=10'

S&B INFRASTRUCTURE, LTD.
Engineering Management Technology
S&B Infrastructure, Ltd. Firm Registration Number: 1582

STATE OF TEXAS
PHILLIP J. PAWELEK
82739
REGISTERED PROFESSIONAL ENGINEER

The seal appearing on this document was authorized by PHILLIP J. PAWELEK P.E. 82739, on 6-11, 2009

Phillip J. Pawelek, P.E.

NORTH FLOODWAY SOUTH (NFS1)
PROPOSED CROSS SECTIONS

SHEET 30 OF 60 SHEET

STATE	COUNTY	DRAWN BY: JL	CHECKED BY: JL	
TEXAS	HIDALGO	PROJECT NO. IBM09T0018		SHEET NO.
REHABILITATION OF NORTH FLOODWAY NORTH AND SOUTH LEVEES (FM 1015 - BASELINE RD.)				10.142

N:\Project\u0450\U0450515\8204\WorkingFiles\Dgn\0450NFS1sLVpxs02.dgn 6/10/2009 7:07:32 PM

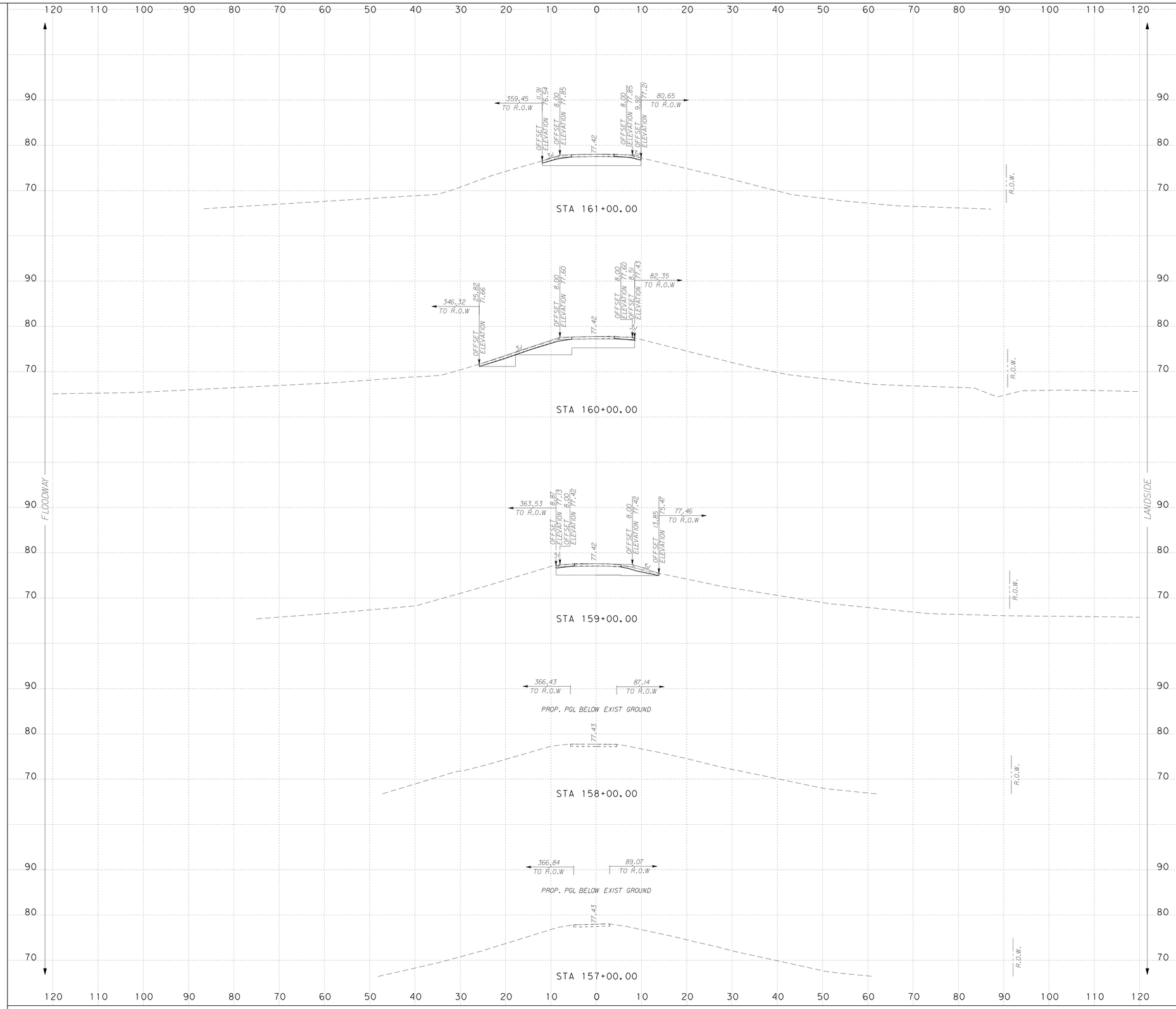

NOTES:

SURFACE DRAINAGE SHALL BE ESTABLISHED BY THE CONTRACTOR PRIOR TO AND DURING CONSTRUCTION TO PREVENT WATER FROM PONDING WITHIN OR ADJACENT TO THE LEVEE STRUCTURE.

IT IS INTENDED THAT THE FINAL SECTION OF THE PROPOSED LEVEE SHALL FACILITATE RAPID DRAINAGE AWAY FROM THE LEVEE STRUCTURE.

SCALE: H : 1"=10'
V : 1"=10'

INTERNATIONAL BOUNDARY AND WATER COMMISSION
COMISION INTERNACIONAL DE LIMITES Y AGUAS

S&B INFRASTRUCTURE, LTD.
Engineering Management Technology

S&B Infrastructure, Ltd. Firm Registration Number: 1582

STATE OF TEXAS
PHILLIP J. PAWELEK
82739
REGISTERED PROFESSIONAL ENGINEER

The seal appearing on this document was authorized by PHILLIP J. PAWELEK P.E. 82739, on 6-11, 2009.

Phillip J. Pawelek, P.E.

NORTH FLOODWAY SOUTH (NFS1)
PROPOSED CROSS SECTIONS

SHEET 31 OF 60 SHEET

STATE	COUNTY	DRAWN BY: JL	CHECKED BY: JL	
TEXAS	HIDALGO	PROJECT NO. IBM09T0018		SHEET NO.
REHABILITATION OF NORTH FLOODWAY NORTH AND SOUTH LEVEES (FM 1015 - BASELINE RD.)				10.143

7:07:35 PM 6/10/2009
N:\Project\0450\0450515\800#WorkingFiles\Dgn\0450NFS1sLVpxs02.dgn

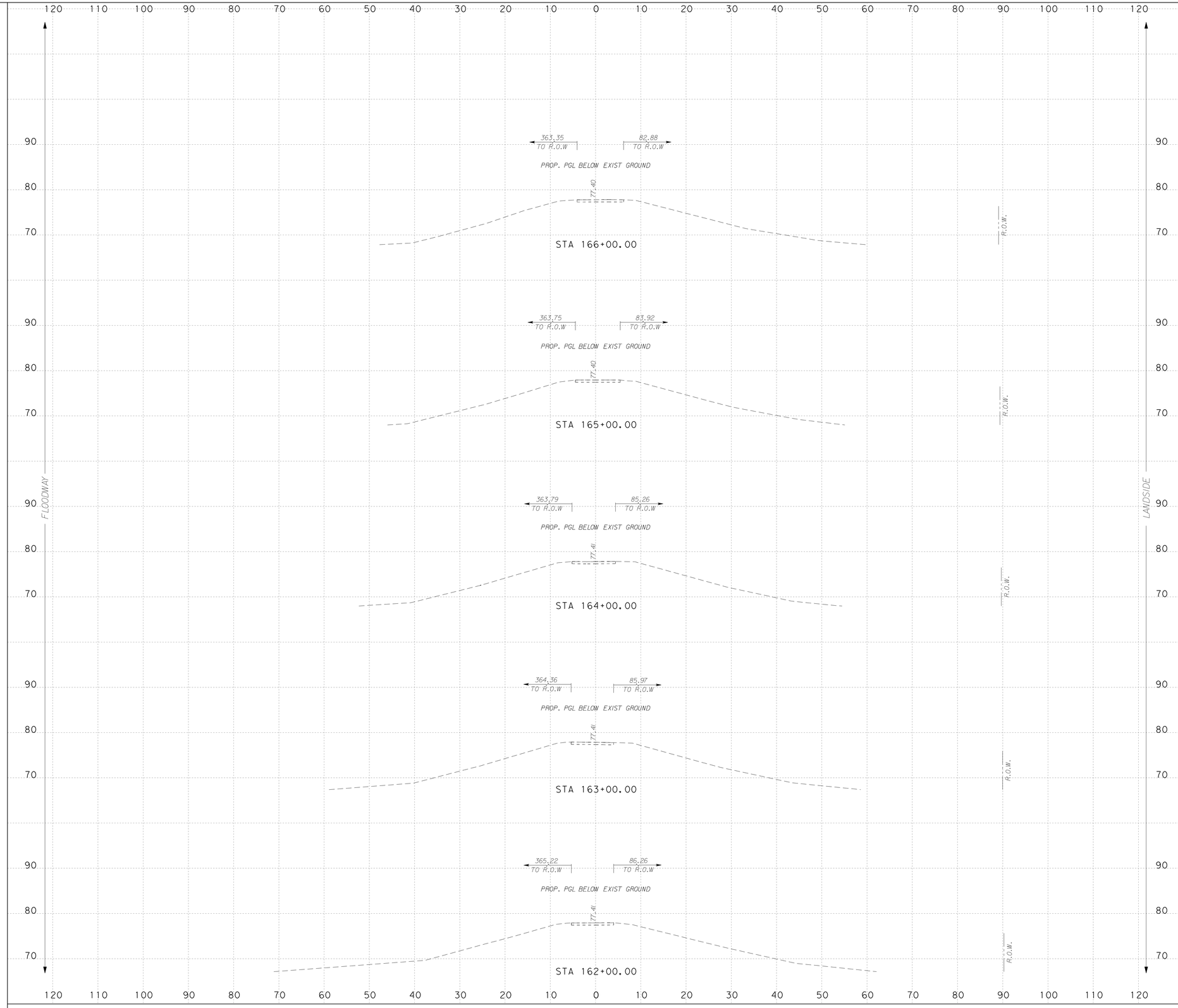

...\Dgn\0450NFS1sLVpxs02.dgn

NOTES:

SURFACE DRAINAGE SHALL BE ESTABLISHED BY THE CONTRACTOR PRIOR TO AND DURING CONSTRUCTION TO PREVENT WATER FROM PONDING WITHIN OR ADJACENT TO THE LEVEE STRUCTURE.

IT IS INTENDED THAT THE FINAL SECTION OF THE PROPOSED LEVEE SHALL FACILITATE RAPID DRAINAGE AWAY FROM THE LEVEE STRUCTURE.

SCALE: H : 1"=10'
V : 1"=10'

S&B INFRASTRUCTURE, LTD.
Engineering Management Technology

S&B Infrastructure, Ltd. Firm Registration Number: 1582

STATE OF TEXAS
PHILLIP J. PAWELEK
82739
REGISTERED PROFESSIONAL ENGINEER

The seal appearing on this document was authorized by PHILLIP J. PAWELEK P.E. 82739, on 6-11, 2009.

Phillip J. Pawelek, P.E.

NORTH FLOODWAY SOUTH (NFS1)
PROPOSED CROSS SECTIONS

SHEET 32 OF 60 SHEET

STATE	COUNTY	DRAWN BY: JL	CHECKED BY: JL	
TEXAS	HIDALGO	PROJECT NO. IBM09T0018		SHEET NO.
REHABILITATION OF NORTH FLOODWAY NORTH AND SOUTH LEVEES (FM 1015 - BASELINE RD.)				10.144

7:07:38 PM
6/10/2009
N:\Project\u0450\U0450515\800*WorkingFiles\Dgn\0450NFS1sLVpxs02.dgn

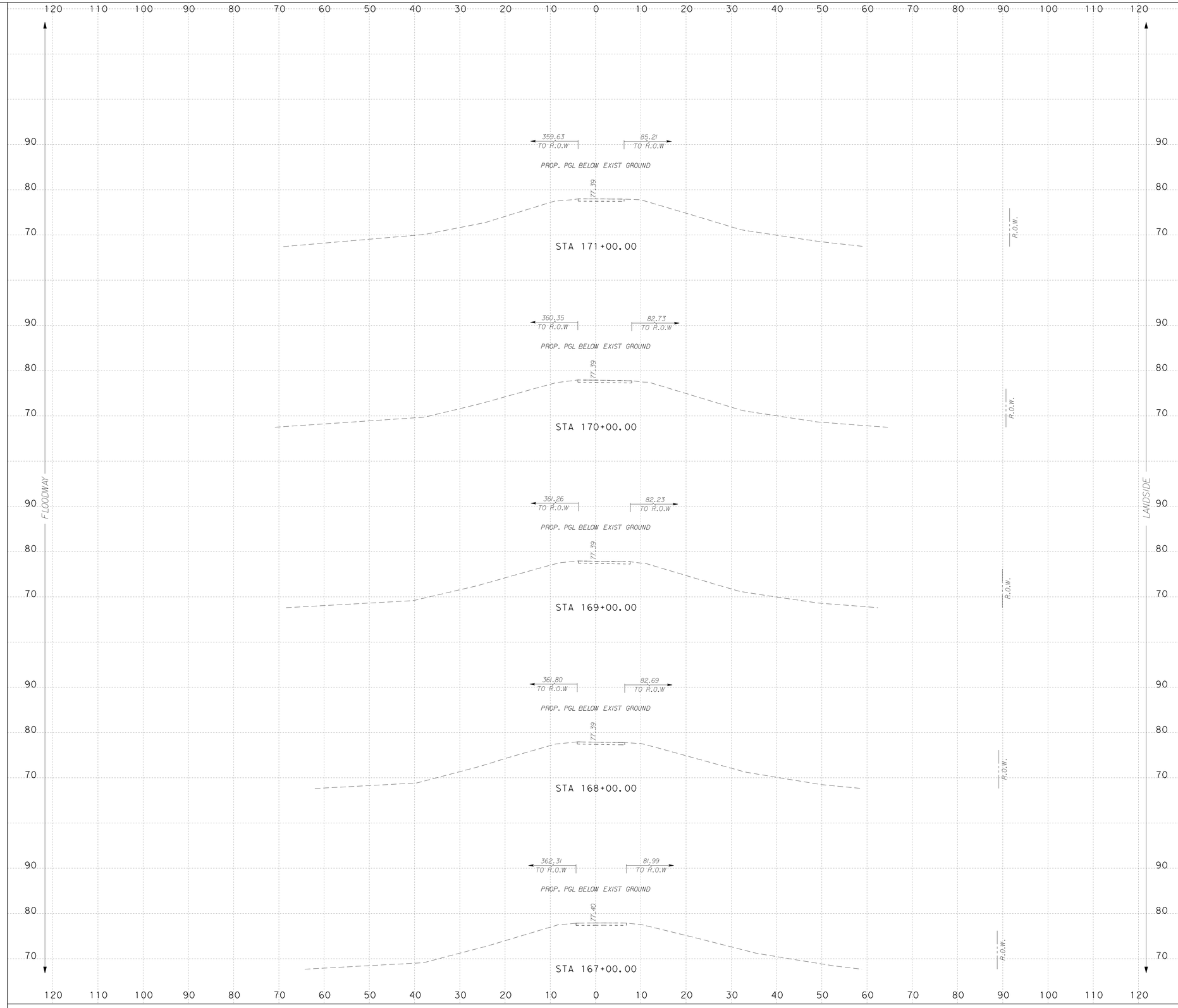

...\Dgn\0450NFS1sLVpxs02.dgn

NOTES:

SURFACE DRAINAGE SHALL BE ESTABLISHED BY THE CONTRACTOR PRIOR TO AND DURING CONSTRUCTION TO PREVENT WATER FROM PONDING WITHIN OR ADJACENT TO THE LEVEE STRUCTURE.

IT IS INTENDED THAT THE FINAL SECTION OF THE PROPOSED LEVEE SHALL FACILITATE RAPID DRAINAGE AWAY FROM THE LEVEE STRUCTURE.

SCALE: H : 1"=10'
V : 1"=10'

S&B INFRASTRUCTURE, LTD.
Engineering Management Technology

S&B Infrastructure, Ltd. Firm Registration Number: 1582

STATE OF TEXAS
PHILLIP J. PAWELEK
82739
REGISTERED PROFESSIONAL ENGINEER

The seal appearing on this document was authorized by PHILLIP J. PAWELEK P.E. 82739, on 6-11, 2009.

Phillip J. Pawelek, P.E.

NORTH FLOODWAY SOUTH (NFS1)
PROPOSED CROSS SECTIONS

SHEET 33 OF 60 SHEET

STATE	COUNTY	DRAWN BY: JL	CHECKED BY: JL	
TEXAS	HIDALGO	PROJECT NO. IBM09T0018		SHEET NO.
REHABILITATION OF NORTH FLOODWAY NORTH AND SOUTH LEVEES (FM 1015 - BASELINE RD.)				10.145

7:07:41 PM
6/10/2009
N:\Project\u0450\U0450515\800*WorkingFiles\Dgn\0450NFS1sLVpxs02.dgn

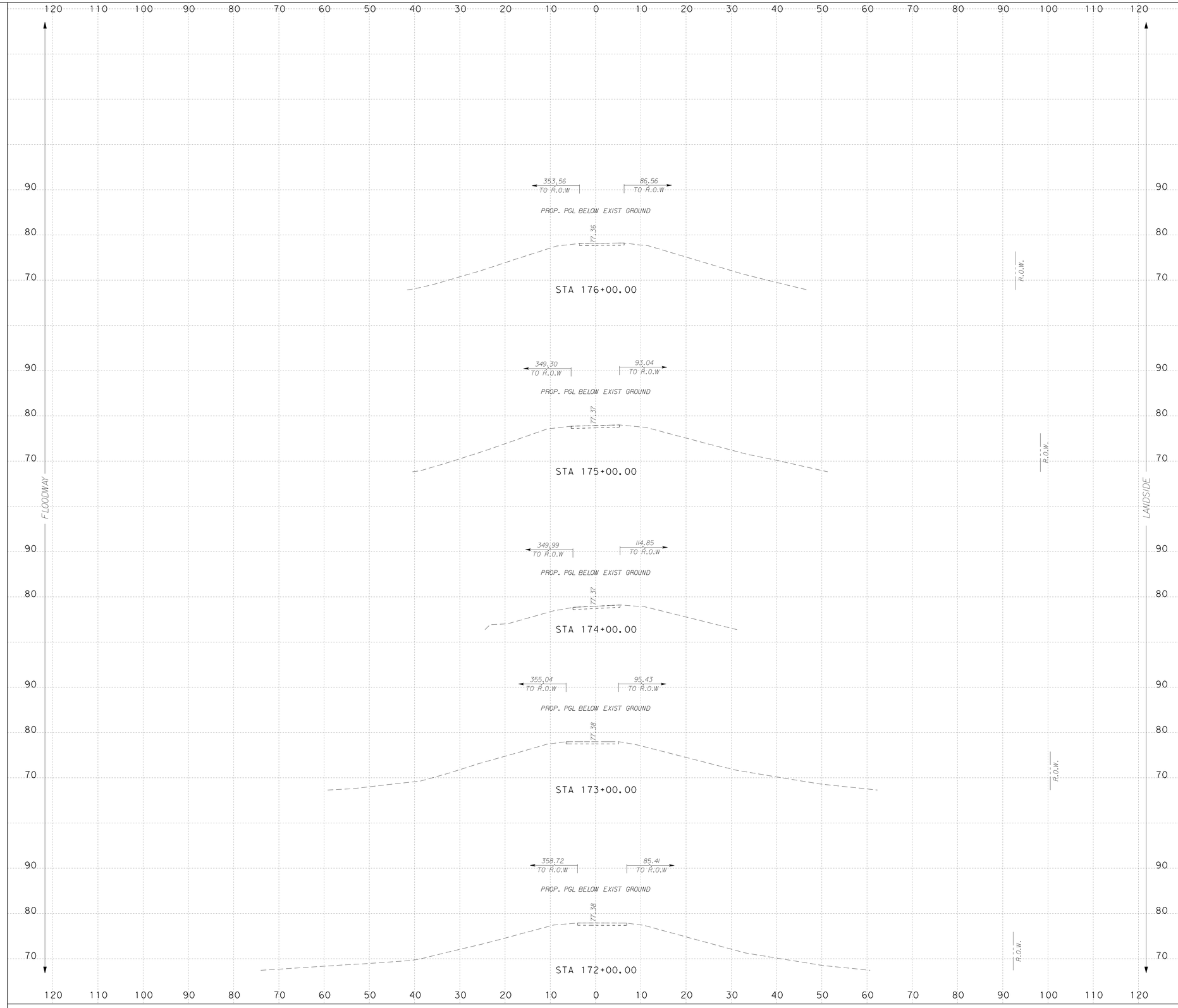

NOTES:

SURFACE DRAINAGE SHALL BE ESTABLISHED BY THE CONTRACTOR PRIOR TO AND DURING CONSTRUCTION TO PREVENT WATER FROM PONDING WITHIN OR ADJACENT TO THE LEVEE STRUCTURE.

IT IS INTENDED THAT THE FINAL SECTION OF THE PROPOSED LEVEE SHALL FACILITATE RAPID DRAINAGE AWAY FROM THE LEVEE STRUCTURE.

SCALE: H : 1"=10'
V : 1"=10'

S&B INFRASTRUCTURE, LTD.
Engineering Management Technology

S&B Infrastructure, Ltd. Firm Registration Number: 1582

STATE OF TEXAS
PHILLIP J. PAWELEK
82739
REGISTERED PROFESSIONAL ENGINEER

The seal appearing on this document was authorized by PHILLIP J. PAWELEK P.E. 82739, on 6-11, 2009

Phillip J. Pawelek, P.E.

NORTH FLOODWAY SOUTH (NFS1) PROPOSED CROSS SECTIONS

SHEET 34 OF 60 SHEET

STATE	COUNTY	DRAWN BY: JL	CHECKED BY: JL	
TEXAS	HIDALGO	PROJECT NO. IBM09T0018		SHEET NO.
REHABILITATION OF NORTH FLOODWAY NORTH AND SOUTH LEVEES (FM 1015 - BASELINE RD.)				10.146

N:\Project\u0450\U045051\800\WorkingFiles\Dgn\0450NFS1sLVpxs02.dgn 6/10/2009 7:07:44 PM

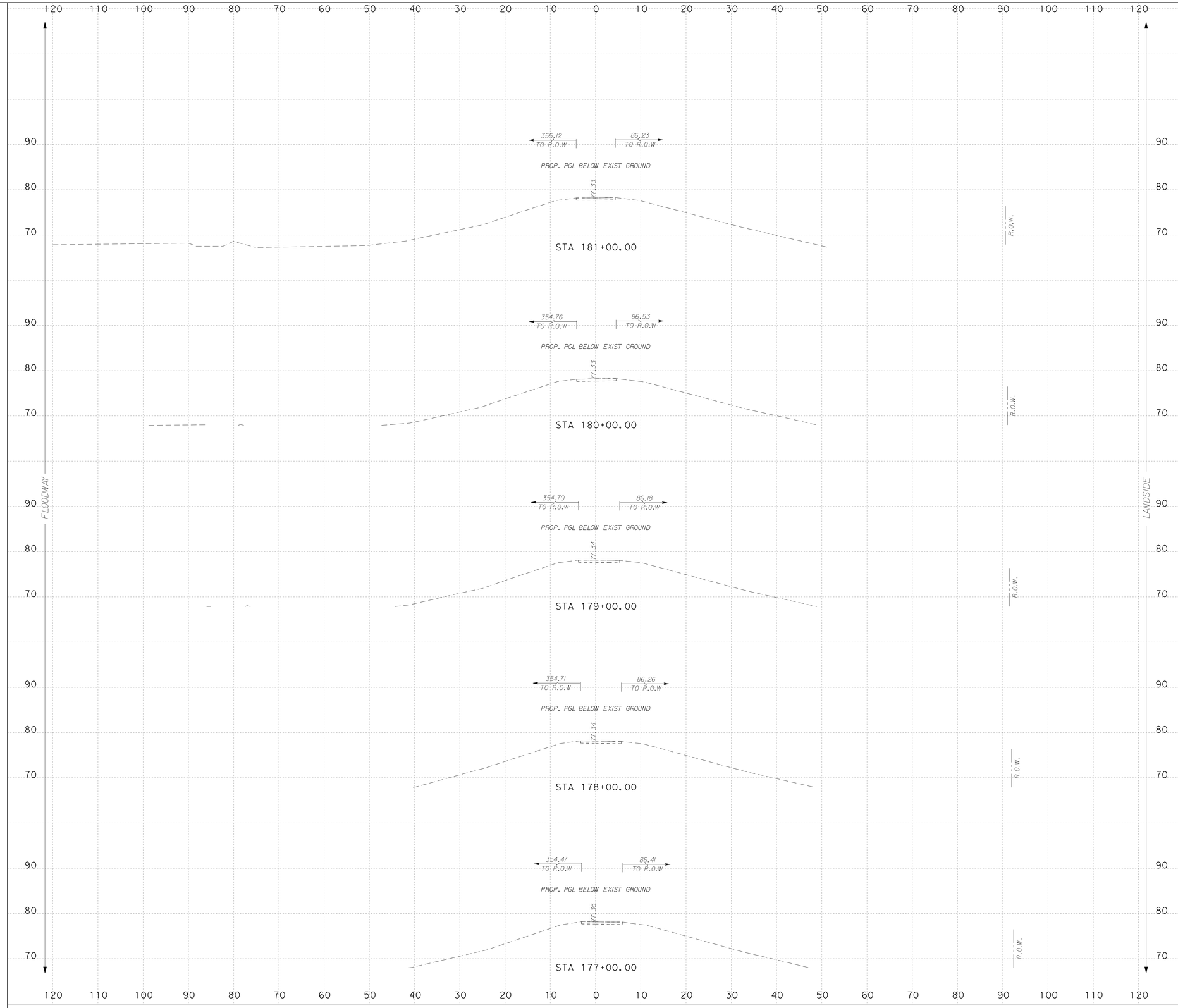

...\Dgn\0450NFS1sLVpxs02.dgn

NOTES:

SURFACE DRAINAGE SHALL BE ESTABLISHED BY THE CONTRACTOR PRIOR TO AND DURING CONSTRUCTION TO PREVENT WATER FROM PONDING WITHIN OR ADJACENT TO THE LEVEE STRUCTURE.

IT IS INTENDED THAT THE FINAL SECTION OF THE PROPOSED LEVEE SHALL FACILITATE RAPID DRAINAGE AWAY FROM THE LEVEE STRUCTURE.

SCALE: H : 1"=10'
V : 1"=10'

S&B INFRASTRUCTURE, LTD.
Engineering Management Technology

S&B Infrastructure, Ltd. Firm Registration Number: 1582

STATE OF TEXAS
PHILLIP J. PAWELEK
82739
REGISTERED PROFESSIONAL ENGINEER

The seal appearing on this document was authorized by PHILLIP J. PAWELEK P.E. 82739, on 6-11, 2009.

Phillip J. Pawelek, P.E.

NORTH FLOODWAY SOUTH (NFS1)
PROPOSED CROSS SECTIONS

SHEET 35 OF 60 SHEET

STATE	COUNTY	DRAWN BY: JL	CHECKED BY: JL	
TEXAS	HIDALGO	PROJECT NO. IBM09T0018		SHEET NO.
REHABILITATION OF NORTH FLOODWAY NORTH AND SOUTH LEVEES (FM 1015 - BASELINE RD.)				10.147

7:07:46 PM
6/10/2009
N:\Project\u0450\U0450515\800*WorkingFiles\Dgn\0450NFS1sLVpxs02.dgn

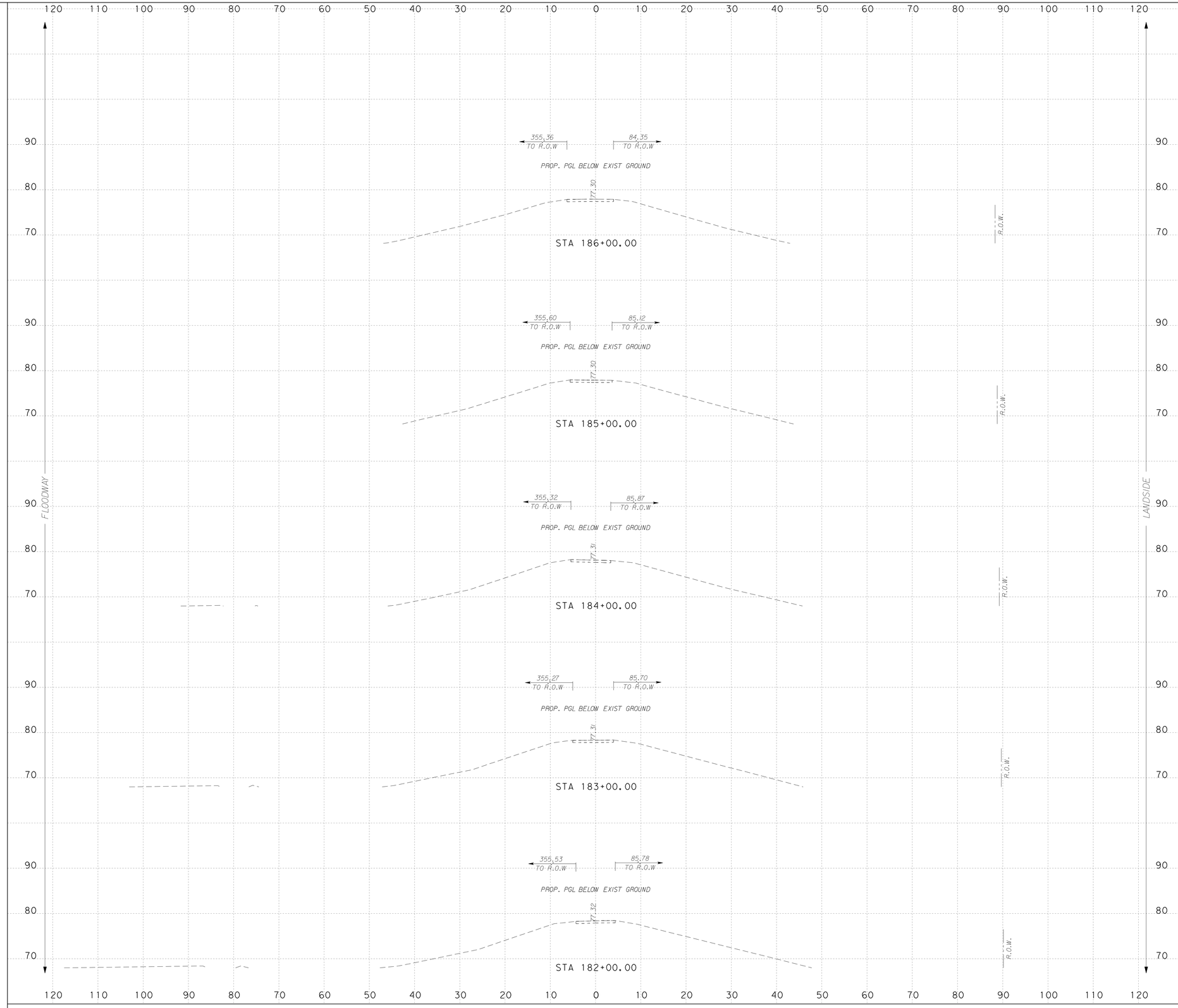

NOTES:

SURFACE DRAINAGE SHALL BE ESTABLISHED BY THE CONTRACTOR PRIOR TO AND DURING CONSTRUCTION TO PREVENT WATER FROM PONDING WITHIN OR ADJACENT TO THE LEVEE STRUCTURE.

IT IS INTENDED THAT THE FINAL SECTION OF THE PROPOSED LEVEE SHALL FACILITATE RAPID DRAINAGE AWAY FROM THE LEVEE STRUCTURE.

SCALE: H : 1"=10'
V : 1"=10'

S&B INFRASTRUCTURE, LTD.
Engineering Management Technology

S&B Infrastructure, Ltd. Firm Registration Number: 1582

STATE OF TEXAS
PHILLIP J. PAWELEK
82739
REGISTERED PROFESSIONAL ENGINEER

The seal appearing on this document was authorized by PHILLIP J. PAWELEK P.E. 82739, on 6-11, 2009

Phillip J. Pawelek, P.E.

NORTH FLOODWAY SOUTH (NFS1) PROPOSED CROSS SECTIONS

SHEET 36 OF 60 SHEET

STATE	COUNTY	DRAWN BY: JL	CHECKED BY: JL	
TEXAS	HIDALGO	PROJECT NO. IBM09T0018		SHEET NO.
REHABILITATION OF NORTH FLOODWAY NORTH AND SOUTH LEVEES (FM 1015 - BASELINE RD.)				10.148

7:07:49 PM 6/10/2009 N:\Project\u0450\U045051S\800\WorkingFiles\Dgn\0450NFS1sLVpxs02.dgn

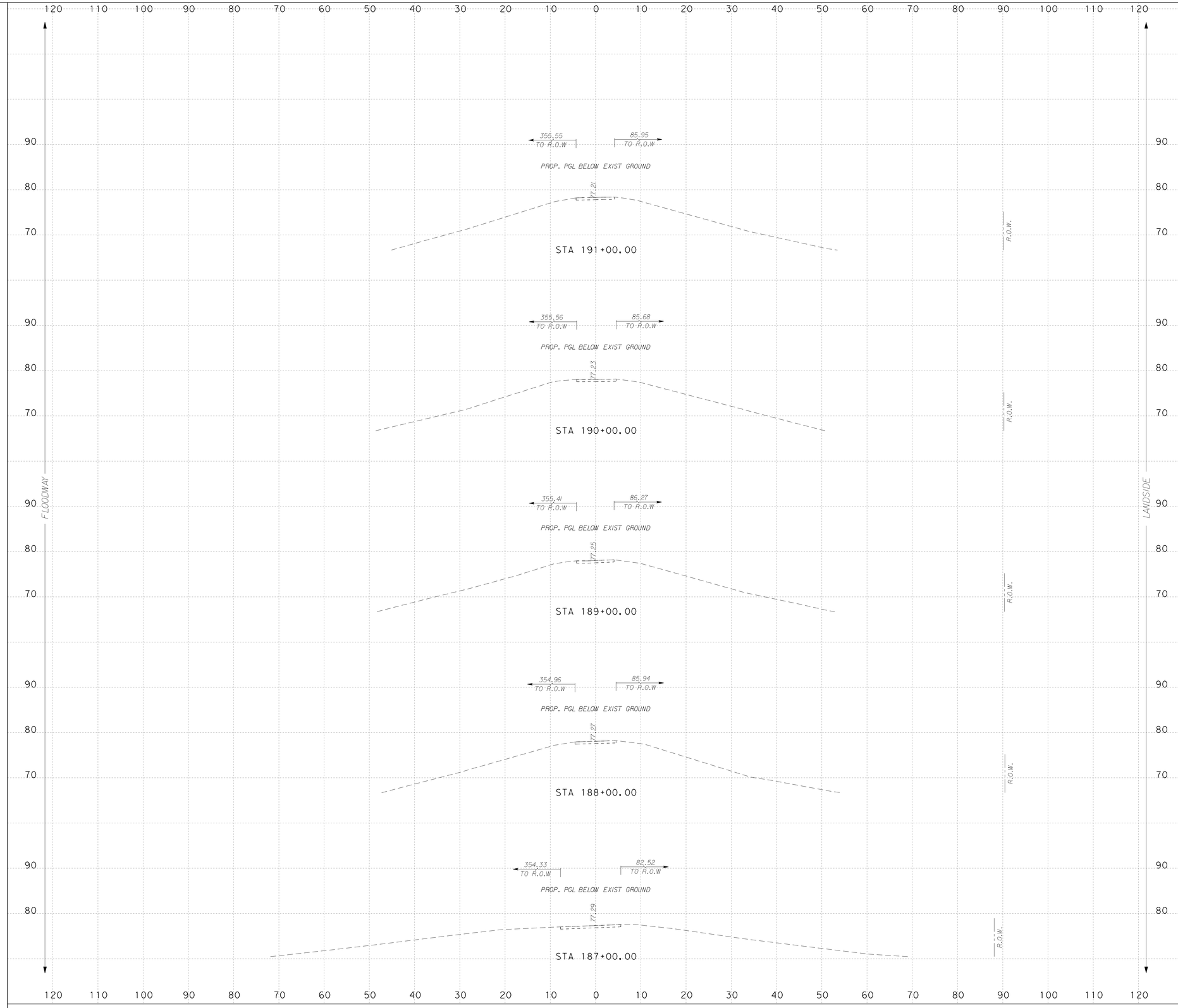

NOTES:

SURFACE DRAINAGE SHALL BE ESTABLISHED BY THE CONTRACTOR PRIOR TO AND DURING CONSTRUCTION TO PREVENT WATER FROM PONDING WITHIN OR ADJACENT TO THE LEVEE STRUCTURE.

IT IS INTENDED THAT THE FINAL SECTION OF THE PROPOSED LEVEE SHALL FACILITATE RAPID DRAINAGE AWAY FROM THE LEVEE STRUCTURE.

SCALE: H : 1"=10'
V : 1"=10'

S&B INFRASTRUCTURE, LTD.
Engineering Management Technology

S&B Infrastructure, Ltd. Firm Registration Number: 1582

STATE OF TEXAS
PHILLIP J. PAWELEK
82739
REGISTERED PROFESSIONAL ENGINEER

The seal appearing on this document was authorized by PHILLIP J. PAWELEK P.E. 82739, on 6-11, 2009.

Phillip J. Pawelek, P.E.

NORTH FLOODWAY SOUTH (NFS1) PROPOSED CROSS SECTIONS

SHEET 37 OF 60 SHEET

STATE	COUNTY	DRAWN BY: JL	CHECKED BY: JL	
TEXAS	HIDALGO	PROJECT NO. IBM09T0018		SHEET NO.
REHABILITATION OF NORTH FLOODWAY NORTH AND SOUTH LEVEES (FM 1015 - BASELINE RD.)				10.149

N:\Project\u0450\U045051S\800\WorkingFiles\Dgn\0450NFS1sLVpxs02.dgn 6/10/2009 7:07:52 PM

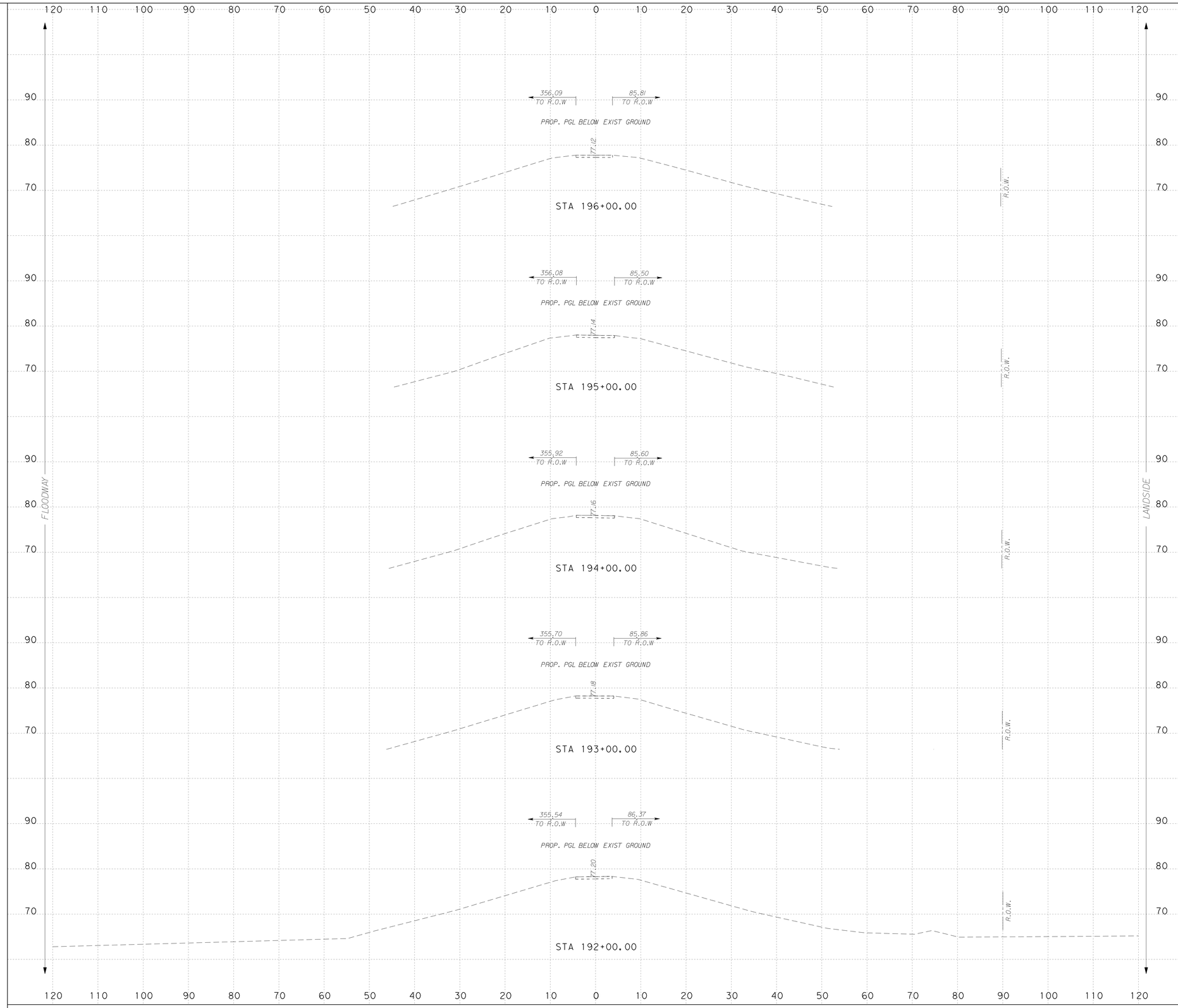

NOTES:

SURFACE DRAINAGE SHALL BE ESTABLISHED BY THE CONTRACTOR PRIOR TO AND DURING CONSTRUCTION TO PREVENT WATER FROM PONDING WITHIN OR ADJACENT TO THE LEVEE STRUCTURE.

IT IS INTENDED THAT THE FINAL SECTION OF THE PROPOSED LEVEE SHALL FACILITATE RAPID DRAINAGE AWAY FROM THE LEVEE STRUCTURE.

SCALE: H : 1"=10'
V : 1"=10'

INTERNATIONAL BOUNDARY AND WATER COMMISSION
COMISION INTERNACIONAL DE LIMITES Y AGUAS

S&B INFRASTRUCTURE, LTD.
Engineering Management Technology

S&B Infrastructure, Ltd. Firm Registration Number: 1582

STATE OF TEXAS
PHILLIP J. PAWELEK
82739
REGISTERED PROFESSIONAL ENGINEER

The seal appearing on this document was authorized by PHILLIP J. PAWELEK P.E. 82739, on 6-11, 2009.

Phillip J. Pawelek, P.E.

NORTH FLOODWAY SOUTH (NFS1) PROPOSED CROSS SECTIONS

SHEET 38 OF 60 SHEET

STATE	COUNTY	DRAWN BY: JL	CHECKED BY: JL	
TEXAS	HIDALGO	PROJECT NO. IBM09T0018		SHEET NO.
REHABILITATION OF NORTH FLOODWAY NORTH AND SOUTH LEVEES (FM 1015 - BASELINE RD.)				10.150

7:07:55 PM 6/10/2009
N:\Project\0450\0450515\800\WorkingFiles\Dgn\0450NFS1sLVpxs02.dgn

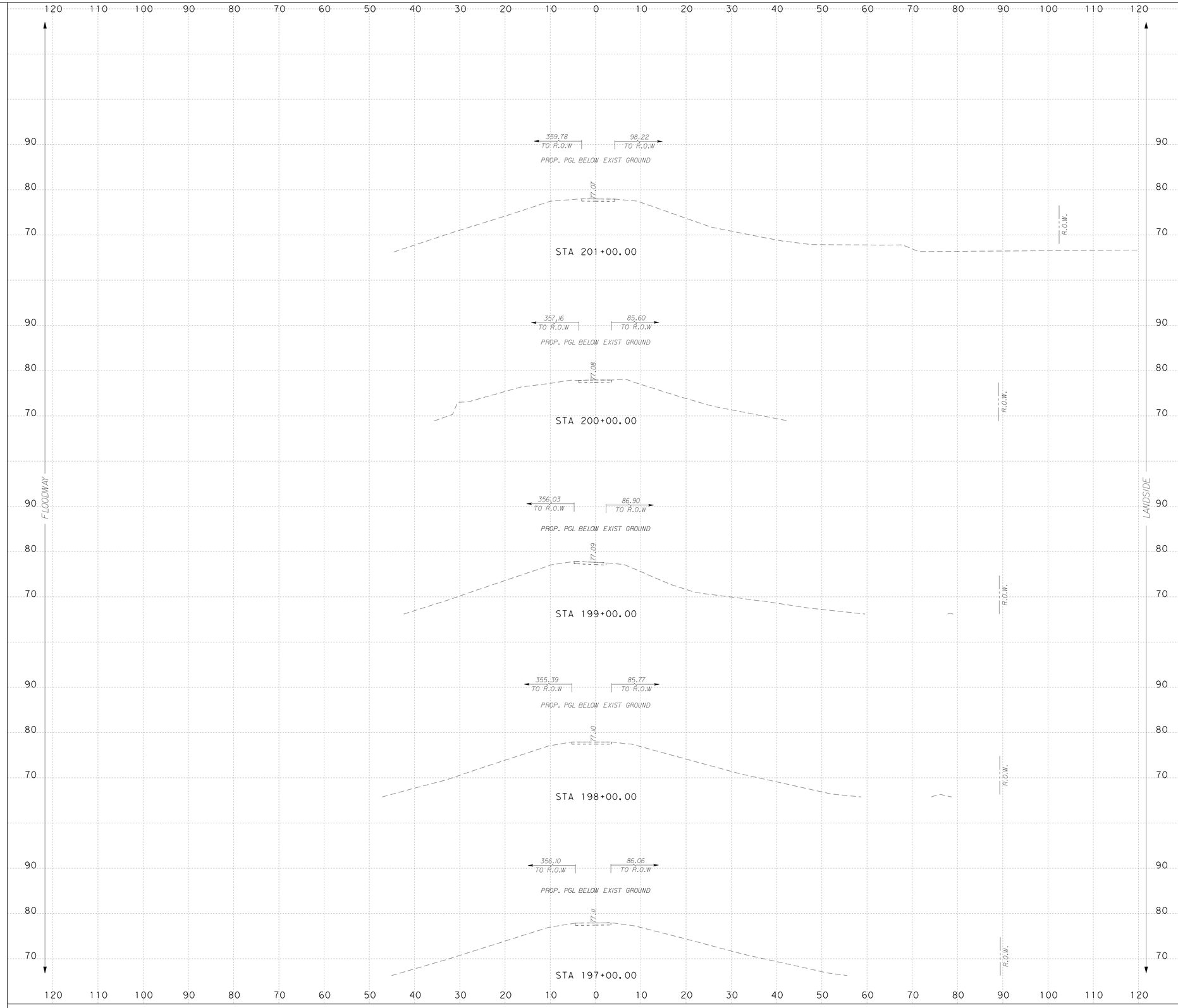

NOTES:

SURFACE DRAINAGE SHALL BE ESTABLISHED BY THE CONTRACTOR PRIOR TO AND DURING CONSTRUCTION TO PREVENT WATER FROM PONDING WITHIN OR ADJACENT TO THE LEVEE STRUCTURE.

IT IS INTENDED THAT THE FINAL SECTION OF THE PROPOSED LEVEE SHALL FACILITATE RAPID DRAINAGE AWAY FROM THE LEVEE STRUCTURE.

SCALE: H : 1"=10'
V : 1"=10'

S&B INFRASTRUCTURE, LTD.
Engineering Management Technology
S&B Infrastructure, Ltd. Firm Registration Number: 1582

STATE OF TEXAS
PHILLIP J. PAWELEK
82739
REGISTERED PROFESSIONAL ENGINEER

The seal appearing on this document was authorized by PHILLIP J. PAWELEK P.E. 82739, on 6-11, 2009

Phillip J. Pawelek, P.E.

NORTH FLOODWAY SOUTH (NFS1)
PROPOSED CROSS SECTIONS

SHEET 39 OF 60 SHEET

STATE	COUNTY	DRAWN BY: JL	CHECKED BY: JL	
TEXAS	HIDALGO	PROJECT NO. IBM09T0018		SHEET NO.
REHABILITATION OF NORTH FLOODWAY NORTH AND SOUTH LEVEES (FM 1015 - BASELINE RD.)				10.151

N:\Project\u0450\U045051\800\WorkingFiles\Dgn\0450NFS1sLVpxs02.dgn
6/10/2009 7:07:58 PM

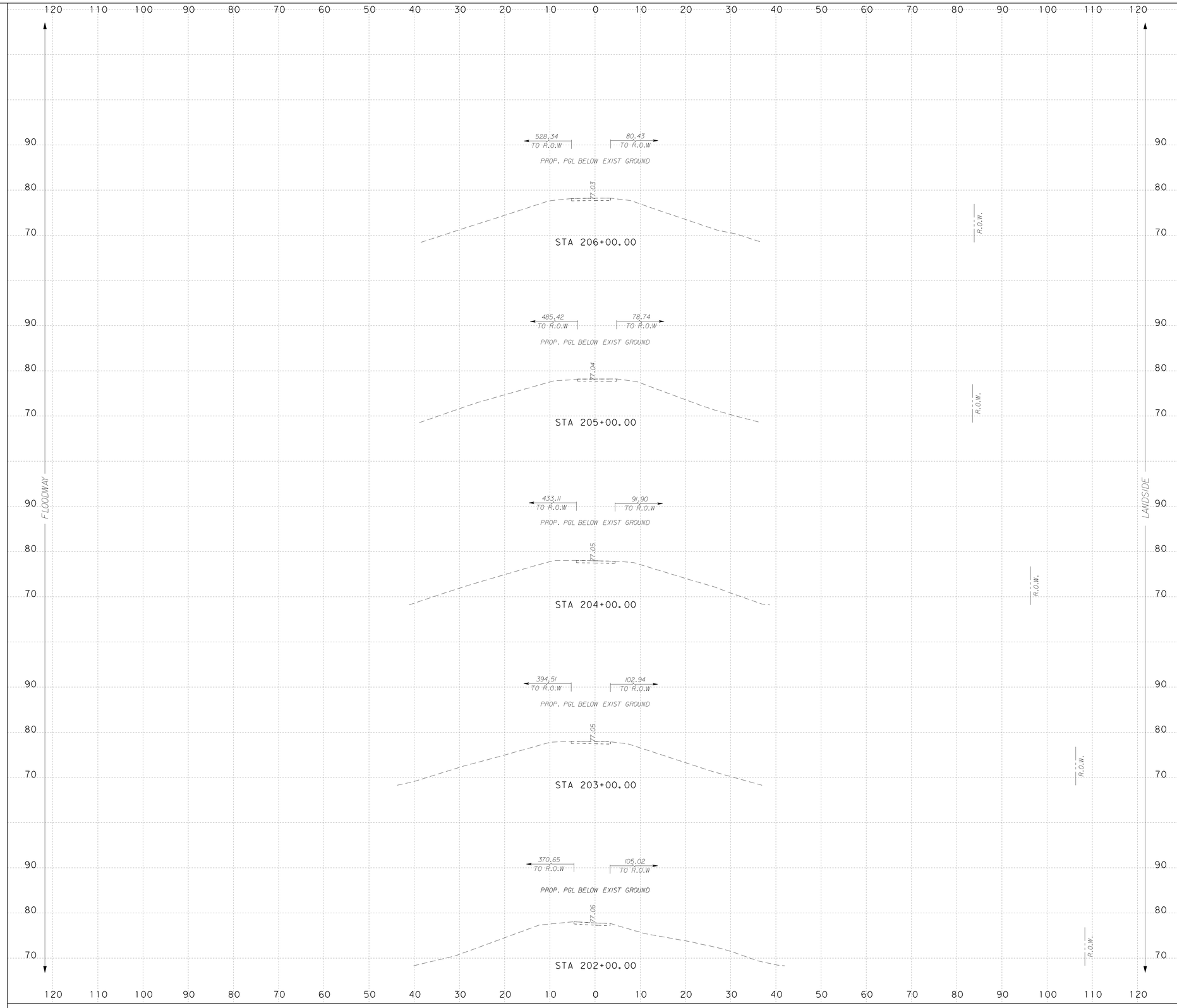

NOTES:

SURFACE DRAINAGE SHALL BE ESTABLISHED BY THE CONTRACTOR PRIOR TO AND DURING CONSTRUCTION TO PREVENT WATER FROM PONDING WITHIN OR ADJACENT TO THE LEVEE STRUCTURE.

IT IS INTENDED THAT THE FINAL SECTION OF THE PROPOSED LEVEE SHALL FACILITATE RAPID DRAINAGE AWAY FROM THE LEVEE STRUCTURE.

SCALE: H : 1"=10'
V : 1"=10'

INTERNATIONAL BOUNDARY AND WATER COMMISSION
COMISION INTERNACIONAL DE LIMITES Y AGUAS

S&B INFRASTRUCTURE, LTD.
Engineering Management Technology

S&B Infrastructure, Ltd. Firm Registration Number: 1582

STATE OF TEXAS
PHILLIP J. PAWELEK
82739
REGISTERED PROFESSIONAL ENGINEER

The seal appearing on this document was authorized by PHILLIP J. PAWELEK P.E. 82739, on 6-11, 2009.

Phillip J. Pawelek, P.E.

NORTH FLOODWAY SOUTH (NFS1) PROPOSED CROSS SECTIONS

SHEET 40 OF 60 SHEET

STATE	COUNTY	DRAWN BY: JL	CHECKED BY: JL	
TEXAS	HIDALGO	PROJECT NO. IBM09T0018		SHEET NO.
REHABILITATION OF NORTH FLOODWAY NORTH AND SOUTH LEVEES (FM 1015 - BASELINE RD.)				10.152

7:08:01 PM 6/10/2009
N:\Project\u0450\U045015\800*WorkingFiles\Dgn\0450NFS1sLVpxs02.dgn

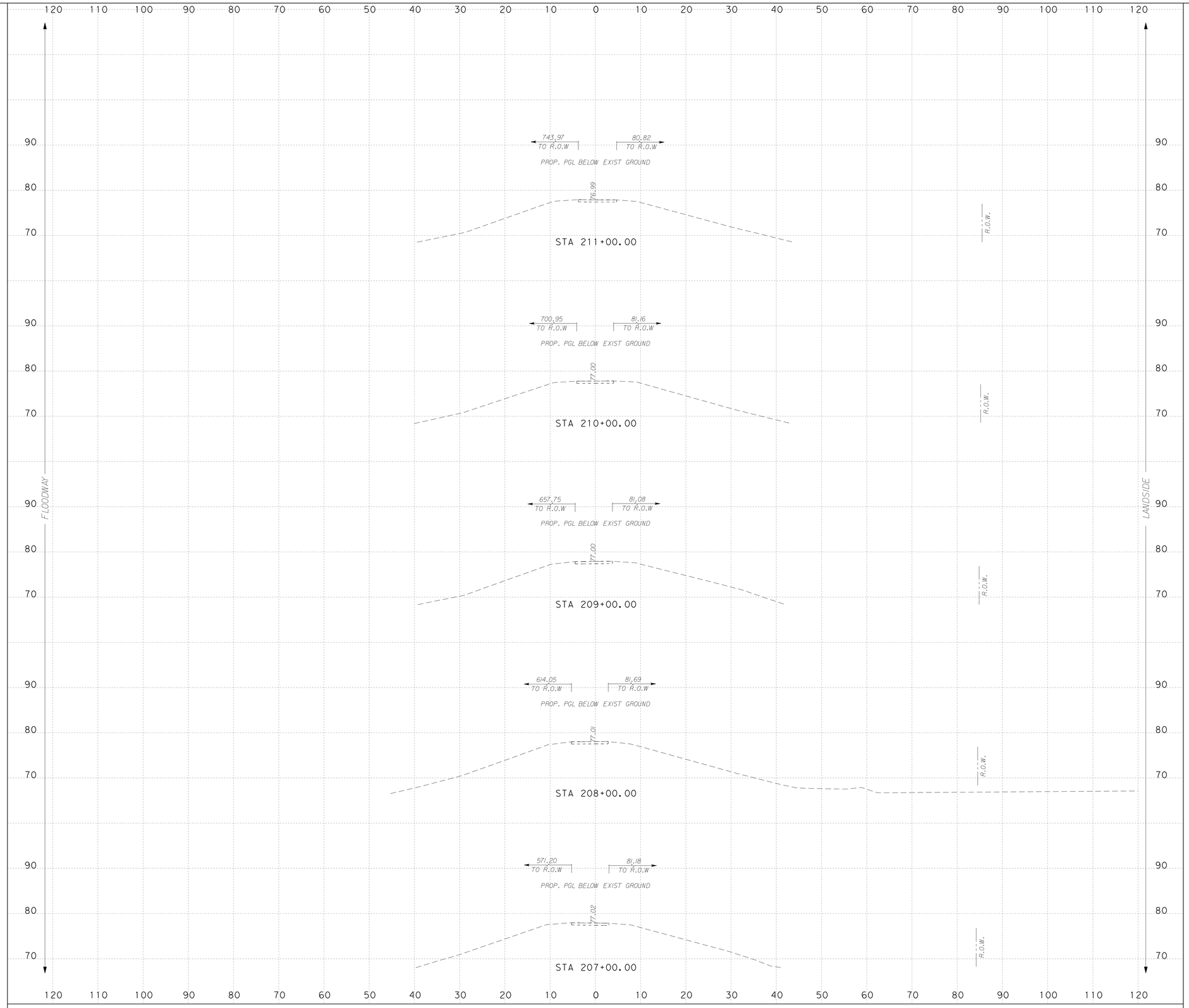

NOTES:

SURFACE DRAINAGE SHALL BE ESTABLISHED BY THE CONTRACTOR PRIOR TO AND DURING CONSTRUCTION TO PREVENT WATER FROM PONDING WITHIN OR ADJACENT TO THE LEVEE STRUCTURE.

IT IS INTENDED THAT THE FINAL SECTION OF THE PROPOSED LEVEE SHALL FACILITATE RAPID DRAINAGE AWAY FROM THE LEVEE STRUCTURE.

SCALE: H : 1"=10'
V : 1"=10'

INTERNATIONAL BOUNDARY AND WATER COMMISSION
COMISION INTERNACIONAL DE LIMITES Y AGUAS

S&B INFRASTRUCTURE, LTD.
Engineering Management Technology

S&B Infrastructure, Ltd. Firm Registration Number: 1582

STATE OF TEXAS
PHILLIP J. PAWELEK
82739
REGISTERED PROFESSIONAL ENGINEER

The seal appearing on this document was authorized by PHILLIP J. PAWELEK P.E. 82739, on 6-11, 2009.

Phillip J. Pawelek, P.E.

NORTH FLOODWAY SOUTH (NFS1) PROPOSED CROSS SECTIONS

SHEET 41 OF 60 SHEET

STATE	COUNTY	DRAWN BY: JL	CHECKED BY: JL	
TEXAS	HIDALGO	PROJECT NO. IBM09T0018		SHEET NO.
REHABILITATION OF NORTH FLOODWAY NORTH AND SOUTH LEVEES (FM 1015 - BASELINE RD.)				10.153

N:\Project\u0450\U045015\800*WorkingFiles\Dgn\0450NFS1sLVpxs02.dgn
6/10/2009 7:08:03 PM

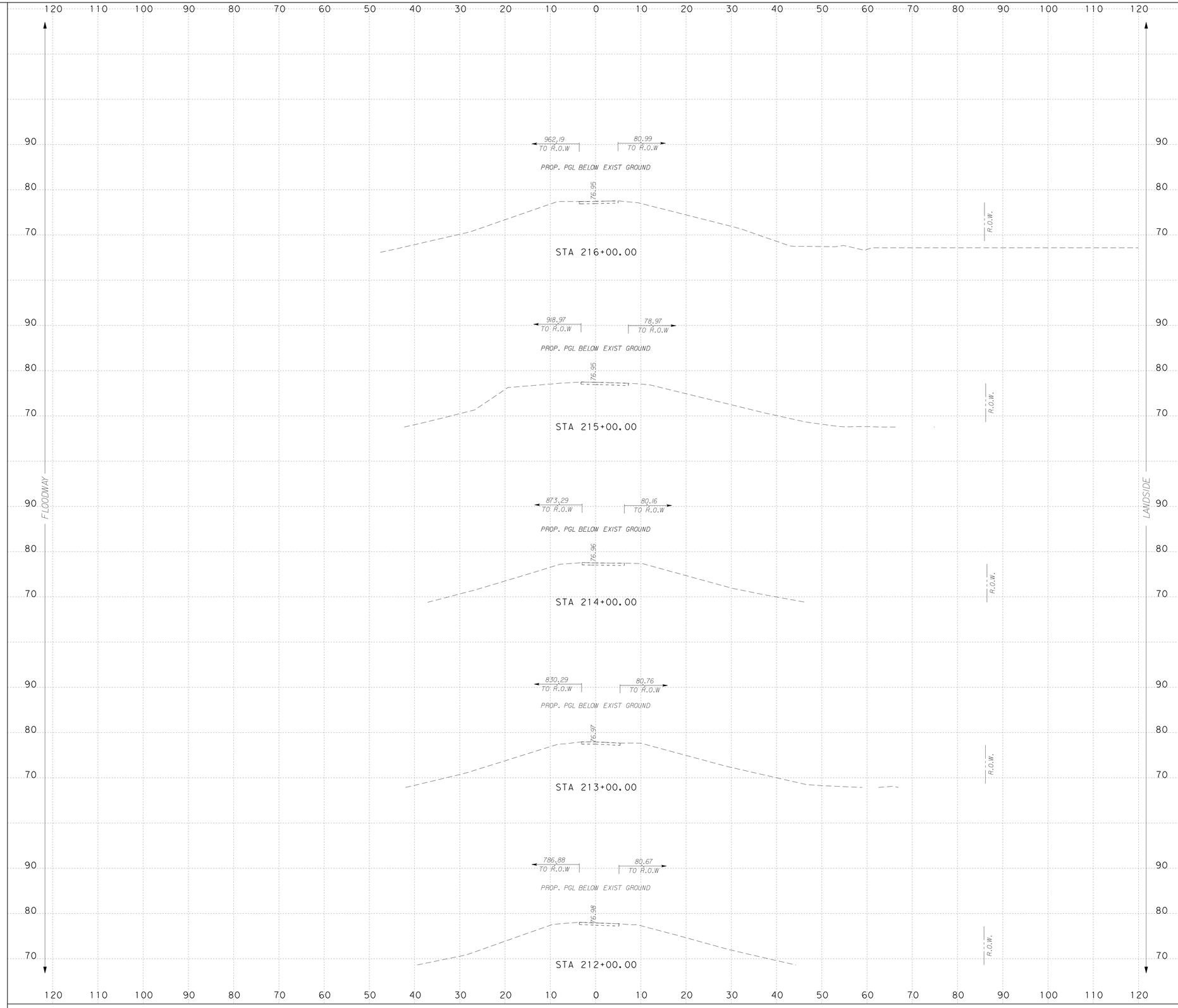

NOTES:

SURFACE DRAINAGE SHALL BE ESTABLISHED BY THE CONTRACTOR PRIOR TO AND DURING CONSTRUCTION TO PREVENT WATER FROM PONDING WITHIN OR ADJACENT TO THE LEVEE STRUCTURE.

IT IS INTENDED THAT THE FINAL SECTION OF THE PROPOSED LEVEE SHALL FACILITATE RAPID DRAINAGE AWAY FROM THE LEVEE STRUCTURE.

SCALE: H : 1"=10'
V : 1"=10'

S&B INFRASTRUCTURE, LTD.
Engineering Management Technology

S&B Infrastructure, Ltd. Firm Registration Number: 1582

STATE OF TEXAS
PHILLIP J. PAWELEK
82739
REGISTERED PROFESSIONAL ENGINEER

The seal appearing on this document was authorized by PHILLIP J. PAWELEK P.E. 82739, on 6-11, 2009

Phillip J. Pawelek, P.E.

NORTH FLOODWAY SOUTH (NFS1)
PROPOSED CROSS SECTIONS

SHEET 42 OF 60 SHEET

STATE	COUNTY	DRAWN BY: JL	CHECKED BY: JL	
TEXAS	HIDALGO	PROJECT NO. IBM09T0018		SHEET NO.
REHABILITATION OF NORTH FLOODWAY NORTH AND SOUTH LEVEES (FM 1015 - BASELINE RD.)				10.154

7:08:06 PM 6/10/2009 N:\Project\u0450\U045051\800\WorkingFiles\Dgn\0450NFS1sLVpxs02.dgn

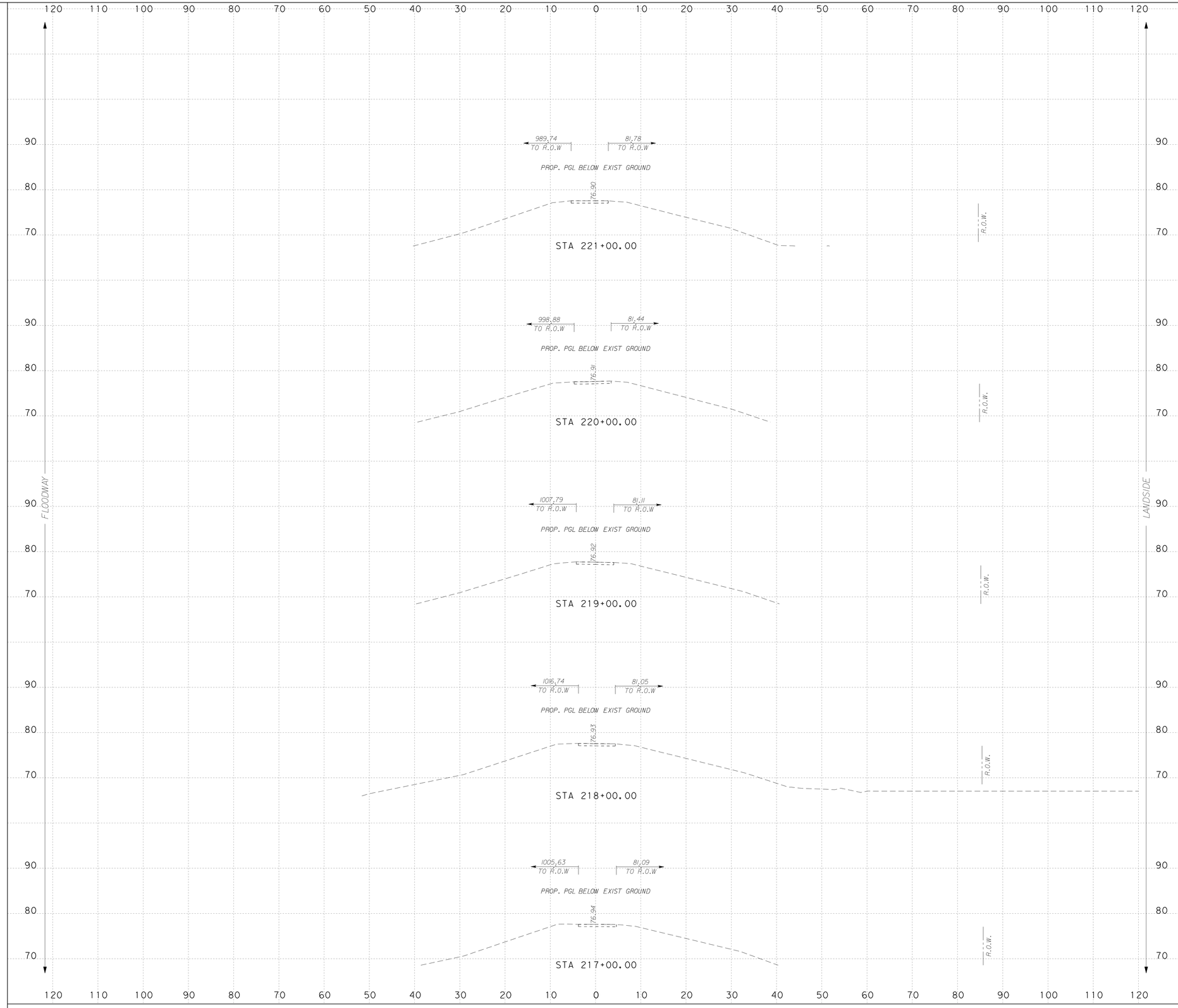

NOTES:

SURFACE DRAINAGE SHALL BE ESTABLISHED BY THE CONTRACTOR PRIOR TO AND DURING CONSTRUCTION TO PREVENT WATER FROM PONDING WITHIN OR ADJACENT TO THE LEVEE STRUCTURE.

IT IS INTENDED THAT THE FINAL SECTION OF THE PROPOSED LEVEE SHALL FACILITATE RAPID DRAINAGE AWAY FROM THE LEVEE STRUCTURE.

SCALE: H : 1"=10'
V : 1"=10'

S&B INFRASTRUCTURE, LTD.
Engineering Management Technology
S&B Infrastructure, Ltd. Firm Registration Number: 1582

STATE OF TEXAS
PHILLIP J. PAWELEK
82739
REGISTERED PROFESSIONAL ENGINEER

The seal appearing on this document was authorized by PHILLIP J. PAWELEK P.E. 82739, on 6-11, 2009

Phillip J. Pawelek, P.E.

NORTH FLOODWAY SOUTH (NFS1) PROPOSED CROSS SECTIONS

SHEET 43 OF 60 SHEET

STATE	COUNTY	DRAWN BY: JL	CHECKED BY: JL	
TEXAS	HIDALGO	PROJECT NO. IBM09T0018		SHEET NO.
REHABILITATION OF NORTH FLOODWAY NORTH AND SOUTH LEVEES (FM 1015 - BASELINE RD.)				10.155

7:08:09 PM 6/10/2009 N:\Project\u0450\U045051S\800\WorkingFiles\Dgn\0450NFS1sLVpxs02.dgn

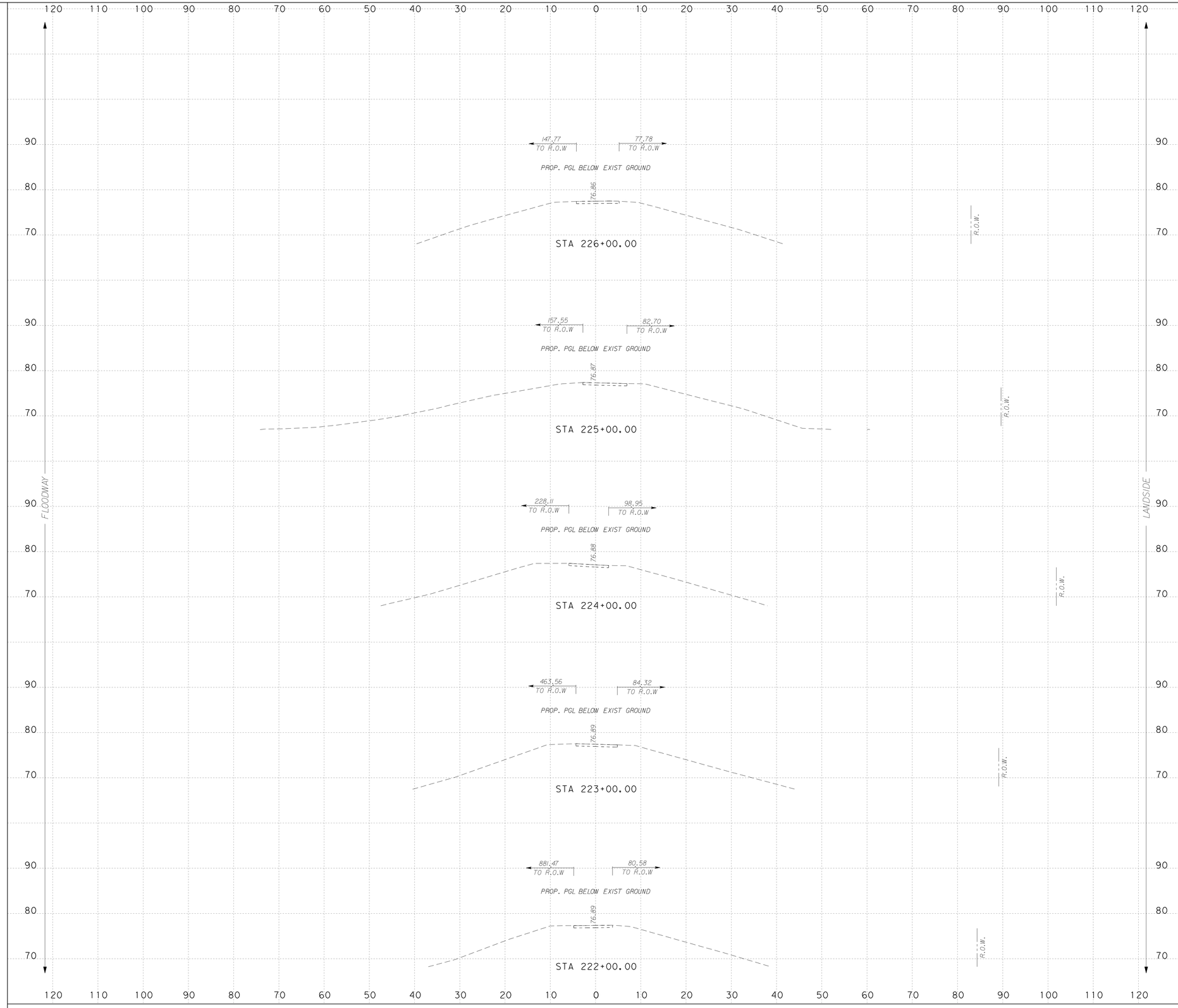

NOTES:

SURFACE DRAINAGE SHALL BE ESTABLISHED BY THE CONTRACTOR PRIOR TO AND DURING CONSTRUCTION TO PREVENT WATER FROM PONDING WITHIN OR ADJACENT TO THE LEVEE STRUCTURE.

IT IS INTENDED THAT THE FINAL SECTION OF THE PROPOSED LEVEE SHALL FACILITATE RAPID DRAINAGE AWAY FROM THE LEVEE STRUCTURE.

SCALE: H : 1"=10'
V : 1"=10'

S&B INFRASTRUCTURE, LTD.
Engineering Management Technology

S&B Infrastructure, Ltd. Firm Registration Number: 1582

STATE OF TEXAS
PHILLIP J. PAWELEK
82739
REGISTERED PROFESSIONAL ENGINEER

The seal appearing on this document was authorized by PHILLIP J. PAWELEK P.E. 82739, on 6-11, 2009

Phillip J. Pawelek, P.E.

NORTH FLOODWAY SOUTH (NFS1) PROPOSED CROSS SECTIONS

SHEET 44 OF 60 SHEET

STATE	COUNTY	DRAWN BY: JL	CHECKED BY: JL	
TEXAS	HIDALGO	PROJECT NO. IBM09T0018		SHEET NO.
REHABILITATION OF NORTH FLOODWAY NORTH AND SOUTH LEVEES (FM 1015 - BASELINE RD.)				10.156

N:\Project\u0450\U045051\800\WorkingFiles\Dgn\0450NFS1sLVpxs02.dgn 6/10/2009 7:08:12 PM

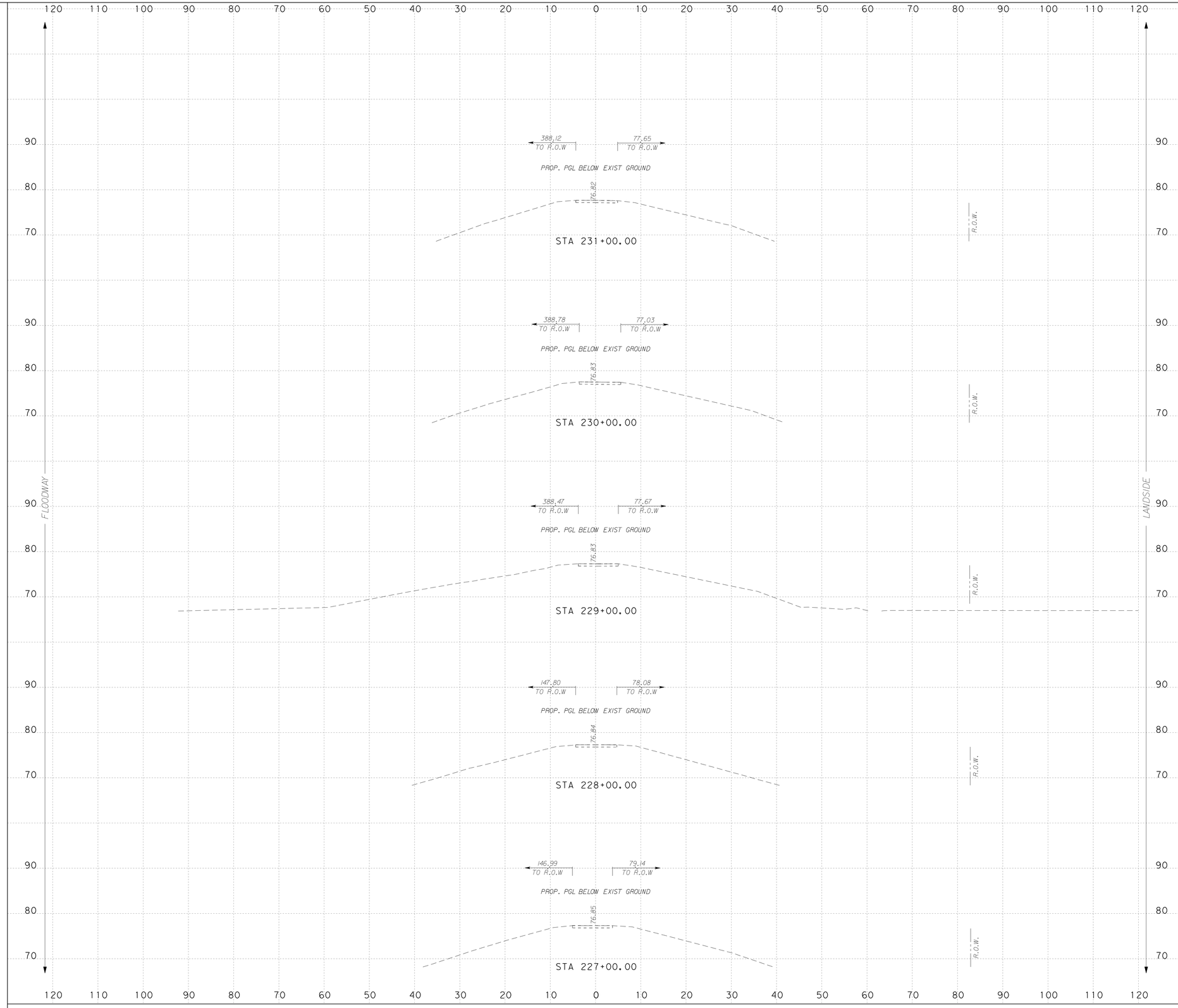

NOTES:

SURFACE DRAINAGE SHALL BE ESTABLISHED BY THE CONTRACTOR PRIOR TO AND DURING CONSTRUCTION TO PREVENT WATER FROM PONDING WITHIN OR ADJACENT TO THE LEVEE STRUCTURE.

IT IS INTENDED THAT THE FINAL SECTION OF THE PROPOSED LEVEE SHALL FACILITATE RAPID DRAINAGE AWAY FROM THE LEVEE STRUCTURE.

SCALE: H : 1"=10'
V : 1"=10'

S&B INFRASTRUCTURE, LTD.
Engineering Management Technology

S&B Infrastructure, Ltd. Firm Registration Number: 1582

STATE OF TEXAS
PHILLIP J. PAWELEK
82739
REGISTERED PROFESSIONAL ENGINEER

The seal appearing on this document was authorized by PHILLIP J. PAWELEK P.E. 82739, on 6-11, 2009

Phillip J. Pawelek, P.E.

NORTH FLOODWAY SOUTH (NFS1)
PROPOSED CROSS SECTIONS

SHEET 45 OF 60 SHEET

STATE	COUNTY	DRAWN BY: JL	CHECKED BY: JL	
TEXAS	HIDALGO	PROJECT NO. IBM09T0018		SHEET NO.
REHABILITATION OF NORTH FLOODWAY NORTH AND SOUTH LEVEES (FM 1015 - BASELINE RD.)				10.157

7:08:14 PM 6/10/2009 N:\Project\u0450\U045051S\800\WorkingFiles\Dgn\0450NFS1sLVpxs02.dgn

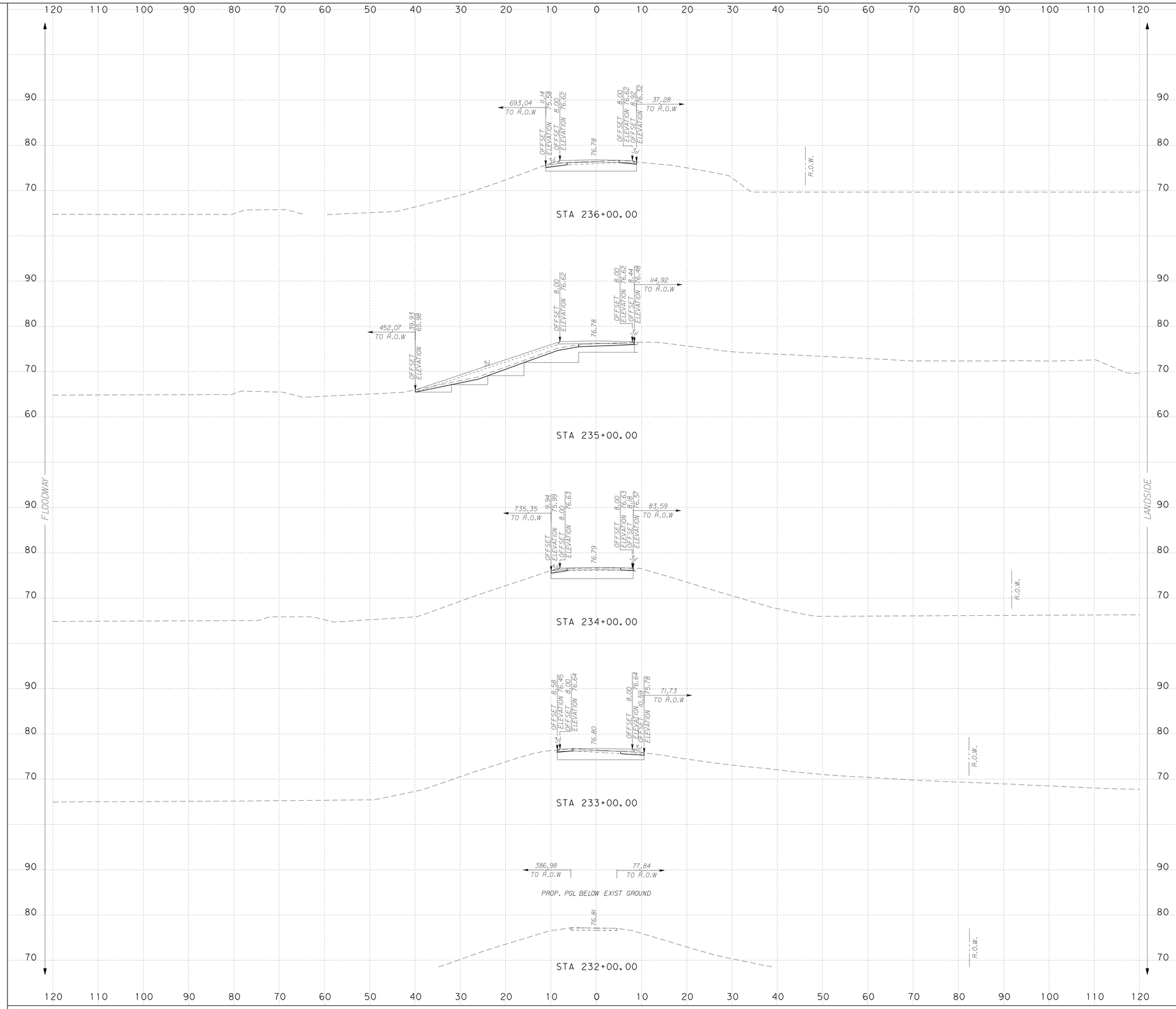

NOTES:

SURFACE DRAINAGE SHALL BE ESTABLISHED BY THE CONTRACTOR PRIOR TO AND DURING CONSTRUCTION TO PREVENT WATER FROM PONDING WITHIN OR ADJACENT TO THE LEVEE STRUCTURE.

IT IS INTENDED THAT THE FINAL SECTION OF THE PROPOSED LEVEE SHALL FACILITATE RAPID DRAINAGE AWAY FROM THE LEVEE STRUCTURE.

SCALE: H : 1"=10'
V : 1"=10'

INTERNATIONAL BOUNDARY AND WATER COMMISSION
COMISION INTERNACIONAL DE LIMITES Y AGUAS

S&B INFRASTRUCTURE, LTD.
Engineering Management Technology

S&B Infrastructure, Ltd. Firm Registration Number: 1582

STATE OF TEXAS
PHILLIP J. PAWELEK
82739
REGISTERED PROFESSIONAL ENGINEER

The seal appearing on this document was authorized by PHILLIP J. PAWELEK P.E. 82739, on 6-11, 2009

Phillip J. Pawelek, P.E.

NORTH FLOODWAY SOUTH (NFS1) PROPOSED CROSS SECTIONS

SHEET 46 OF 60 SHEET

STATE	COUNTY	DRAWN BY: JL	CHECKED BY: JL	
TEXAS	HIDALGO	PROJECT NO. IBM09T0018		SHEET NO.
REHABILITATION OF NORTH FLOODWAY NORTH AND SOUTH LEVEES (FM 1015 - BASELINE RD.)				10.158

7:08:17 PM 6/10/2009
N:\Project\U0450\U0450515\800#WorkingFiles\Dgn\0450NFS1sLVpxs02.dgn

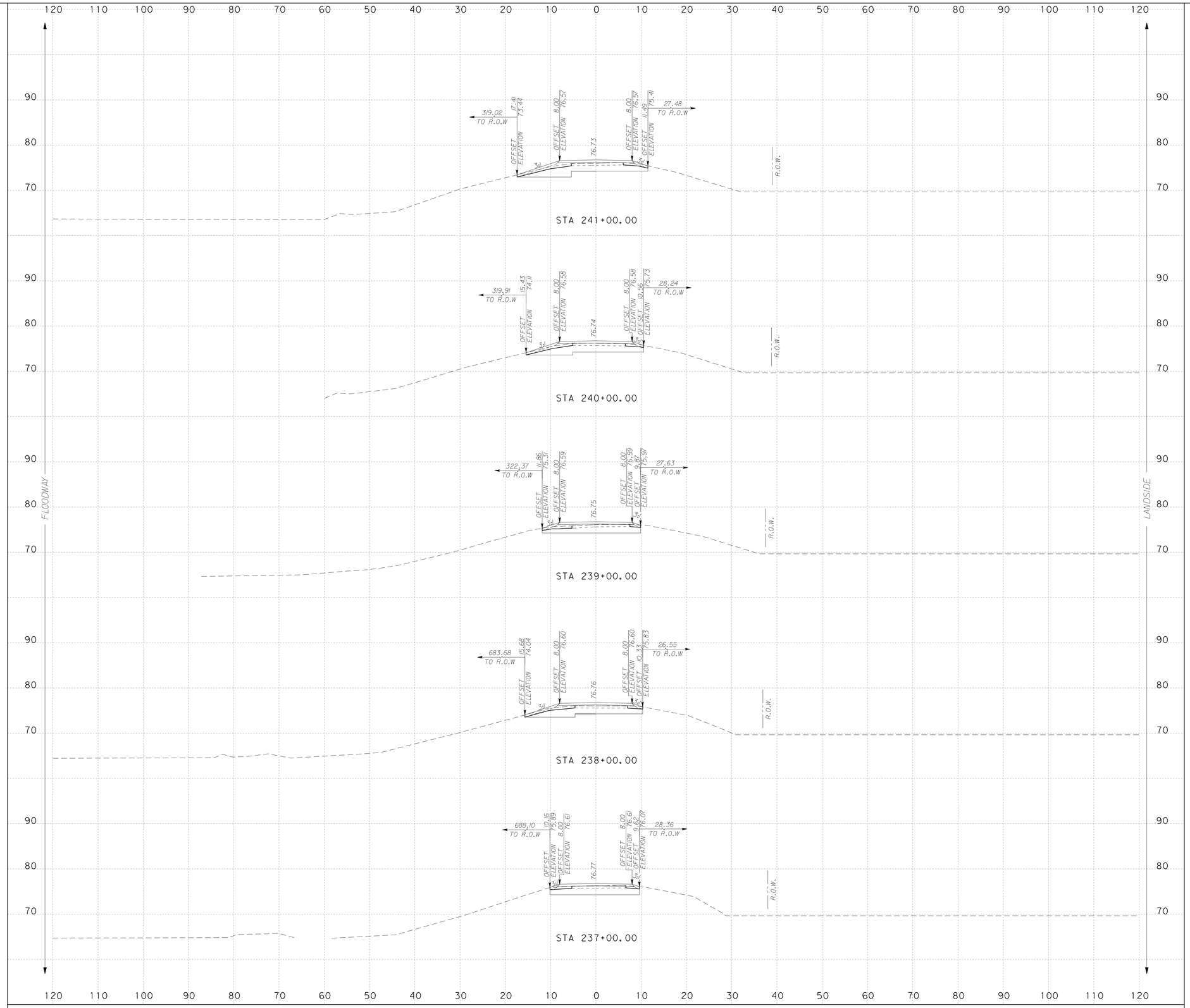

NOTES:

SURFACE DRAINAGE SHALL BE ESTABLISHED BY THE CONTRACTOR PRIOR TO AND DURING CONSTRUCTION TO PREVENT WATER FROM PONDING WITHIN OR ADJACENT TO THE LEVEE STRUCTURE.

IT IS INTENDED THAT THE FINAL SECTION OF THE PROPOSED LEVEE SHALL FACILITATE RAPID DRAINAGE AWAY FROM THE LEVEE STRUCTURE.

SCALE: H : 1"=10'
V : 1"=10'

INTERNATIONAL BOUNDARY AND WATER COMMISSION
COMISION INTERNACIONAL DE LIMITES Y AGUAS

S&B INFRASTRUCTURE, LTD.
Engineering Management Technology

S&B Infrastructure, Ltd. Firm Registration Number: 1582

STATE OF TEXAS
PHILLIP J. PAWELEK
82739
REGISTERED PROFESSIONAL ENGINEER

The seal appearing on this document was authorized by PHILLIP J. PAWELEK P.E. 82739, on 6-11, 2009.

Phillip J. Pawelek, P.E.

NORTH FLOODWAY SOUTH (NFS1) PROPOSED CROSS SECTIONS

SHEET 47 OF 60 SHEET

STATE	COUNTY	DRAWN BY: JL	CHECKED BY: JL	
TEXAS	HIDALGO	PROJECT NO. IBM09T0018		SHEET NO.
REHABILITATION OF NORTH FLOODWAY NORTH AND SOUTH LEVEES (FM 1015 - BASELINE RD.)				10.159

N:\Project\u0450\U045015\800*WorkingFiles\Dgn\0450NFS1sLVpxs02.dgn
6/10/2009
7:08:20 PM

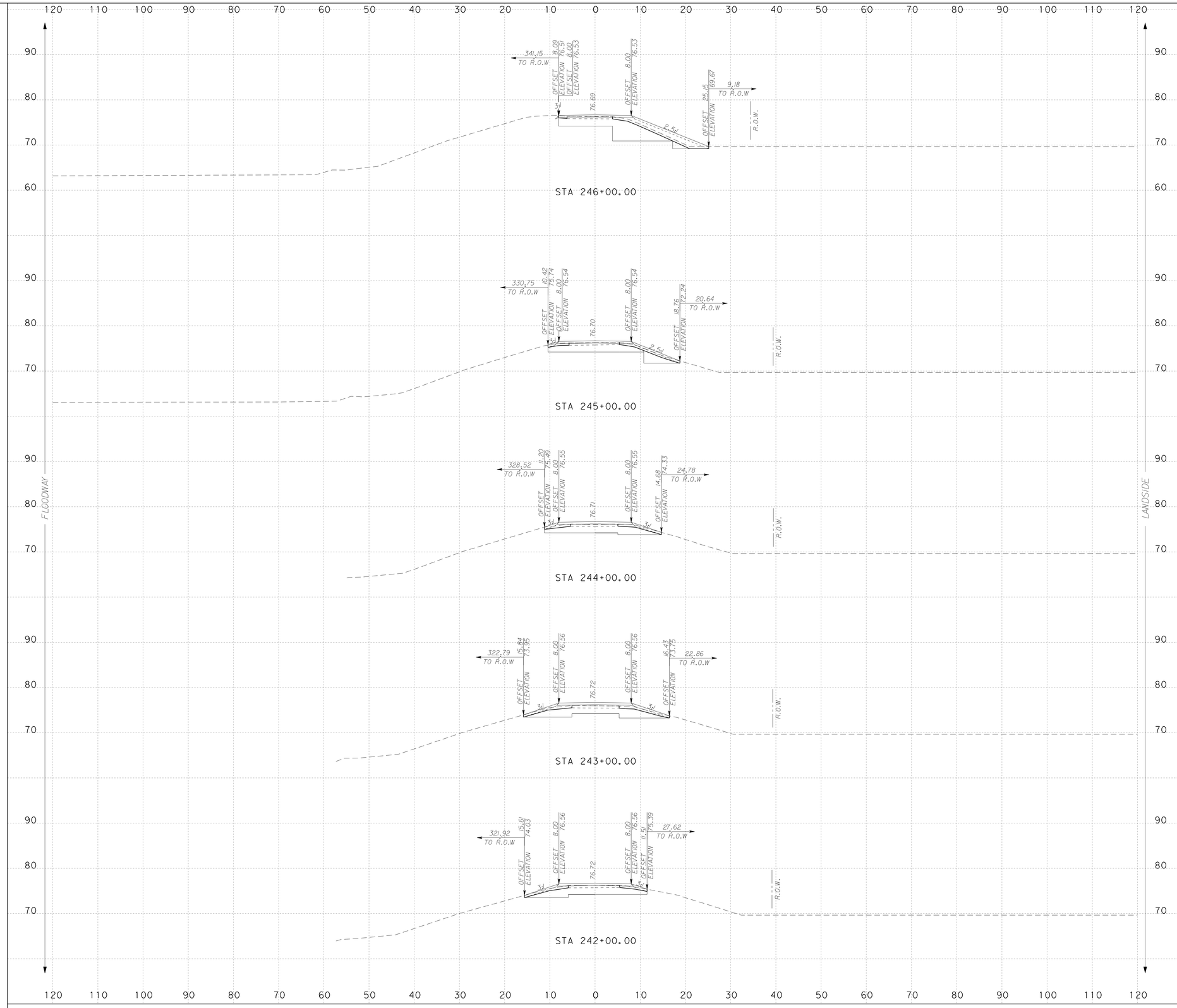

NOTES:

SURFACE DRAINAGE SHALL BE ESTABLISHED BY THE CONTRACTOR PRIOR TO AND DURING CONSTRUCTION TO PREVENT WATER FROM PONDING WITHIN OR ADJACENT TO THE LEVEE STRUCTURE.

IT IS INTENDED THAT THE FINAL SECTION OF THE PROPOSED LEVEE SHALL FACILITATE RAPID DRAINAGE AWAY FROM THE LEVEE STRUCTURE.

SCALE: H : 1"=10'
V : 1"=10'

INTERNATIONAL BOUNDARY AND WATER COMMISSION
COMISION INTERNACIONAL DE LIMITES Y AGUAS

S&B INFRASTRUCTURE, LTD.
Engineering Management Technology

S&B Infrastructure, Ltd. Firm Registration Number: 1582

STATE OF TEXAS
PHILLIP J. PAWELEK
82739
REGISTERED PROFESSIONAL ENGINEER

The seal appearing on this document was authorized by PHILLIP J. PAWELEK P.E. 82739, on 6-11, 2009.

Phillip J. Pawelek, P.E.

NORTH FLOODWAY SOUTH (NFS1) PROPOSED CROSS SECTIONS

SHEET 48 OF 60 SHEET

STATE	COUNTY	DRAWN BY: JL	CHECKED BY: JL	
TEXAS	HIDALGO	PROJECT NO. IBM09T0018		SHEET NO.
REHABILITATION OF NORTH FLOODWAY NORTH AND SOUTH LEVEES (FM 1015 - BASELINE RD.)				10.160

7:08:23 PM 6/10/2009
N:\Project\u0450\U045015\800*WorkingFiles\Dgn\0450NFS1sLVpxs02.dgn

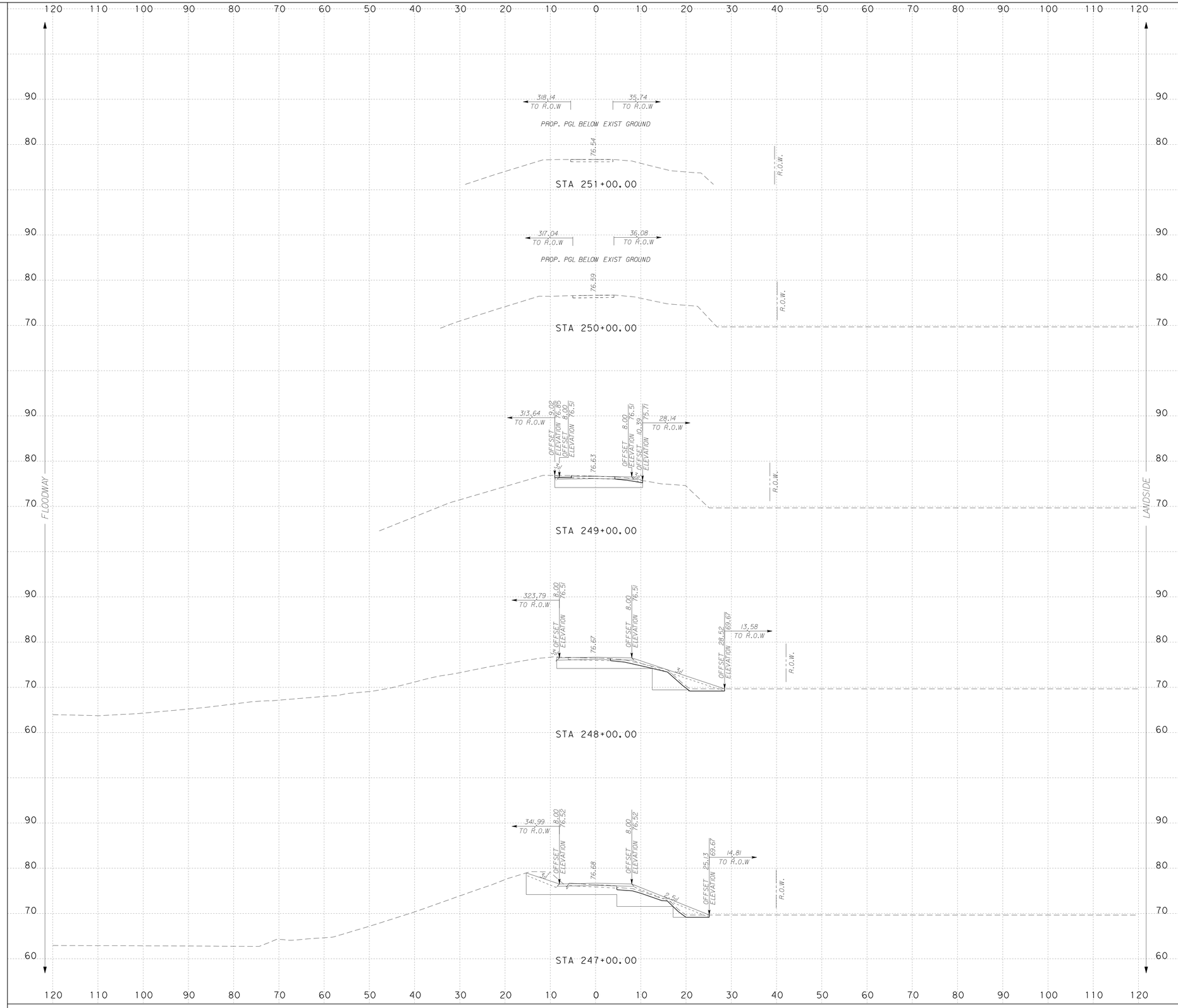

NOTES:

SURFACE DRAINAGE SHALL BE ESTABLISHED BY THE CONTRACTOR PRIOR TO AND DURING CONSTRUCTION TO PREVENT WATER FROM PONDING WITHIN OR ADJACENT TO THE LEVEE STRUCTURE.

IT IS INTENDED THAT THE FINAL SECTION OF THE PROPOSED LEVEE SHALL FACILITATE RAPID DRAINAGE AWAY FROM THE LEVEE STRUCTURE.

SCALE: H : 1"=10'
V : 1"=10'

S&B INFRASTRUCTURE, LTD.
Engineering Management Technology
S&B Infrastructure, Ltd. Firm Registration Number: 1582

STATE OF TEXAS
PHILLIP J. PAWELEK
82739
REGISTERED PROFESSIONAL ENGINEER

The seal appearing on this document was authorized by PHILLIP J. PAWELEK P.E. 82739, on 6-11, 2009

Phillip J. Pawelek, P.E.

NORTH FLOODWAY SOUTH (NFS1)
PROPOSED CROSS SECTIONS

SHEET 49 OF 60 SHEET

STATE	COUNTY	DRAWN BY: JL	CHECKED BY: JL	
TEXAS	HIDALGO	PROJECT NO. IBM09T0018		SHEET NO.
REHABILITATION OF NORTH FLOODWAY NORTH AND SOUTH LEVEES (FM 1015 - BASELINE RD.)				10.161

7:08:26 PM 6/10/2009 N:\Project\u0450\U0450515\8204\WorkingFiles\Dgn\0450NFS1sLVpxs02.dgn

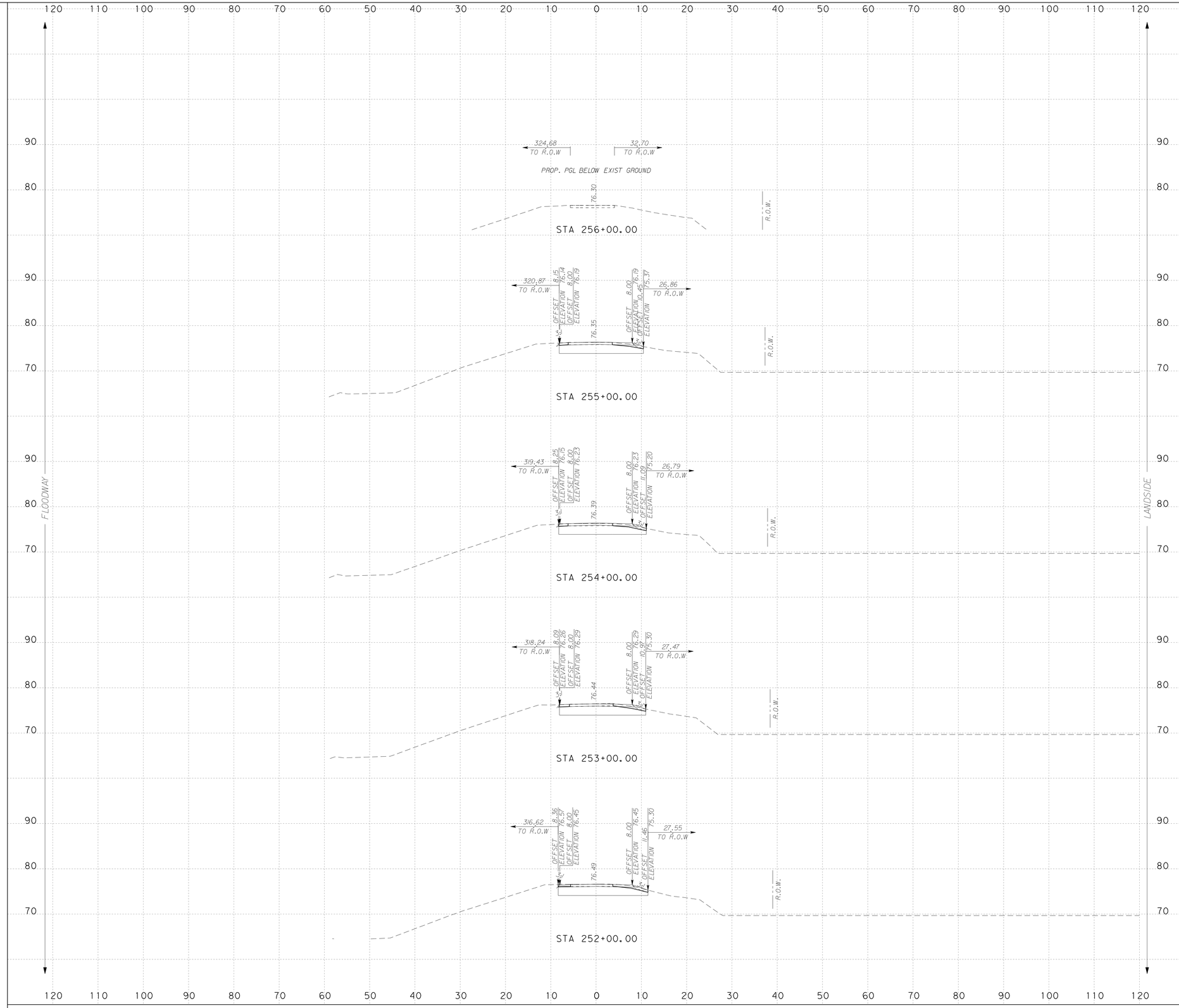

NOTES:

SURFACE DRAINAGE SHALL BE ESTABLISHED BY THE CONTRACTOR PRIOR TO AND DURING CONSTRUCTION TO PREVENT WATER FROM PONDING WITHIN OR ADJACENT TO THE LEVEE STRUCTURE.

IT IS INTENDED THAT THE FINAL SECTION OF THE PROPOSED LEVEE SHALL FACILITATE RAPID DRAINAGE AWAY FROM THE LEVEE STRUCTURE.

SCALE: H : 1"=10'
V : 1"=10'

INTERNATIONAL BOUNDARY AND WATER COMMISSION
COMISION INTERNACIONAL DE LIMITES Y AGUAS

S&B INFRASTRUCTURE, LTD.
Engineering Management Technology

S&B Infrastructure, Ltd. Firm Registration Number: 1582

STATE OF TEXAS
PHILLIP J. PAWELEK
82739
REGISTERED PROFESSIONAL ENGINEER

The seal appearing on this document was authorized by PHILLIP J. PAWELEK P.E. 82739, on 6-11, 2009.

Phillip J. Pawelek, P.E.

NORTH FLOODWAY SOUTH (NFS1) PROPOSED CROSS SECTIONS

SHEET 50 OF 60 SHEET

STATE	COUNTY	DRAWN BY: JL	CHECKED BY: JL	
TEXAS	HIDALGO	PROJECT NO. IBM09T0018		SHEET NO.
REHABILITATION OF NORTH FLOODWAY NORTH AND SOUTH LEVEES (FM 1015 - BASELINE RD.)				10.162

7:08:29 PM 6/10/2009
N:\Project\u0450\U045015\800*Working\Files\Dgn\0450NFS1sLVpxs02.dgn

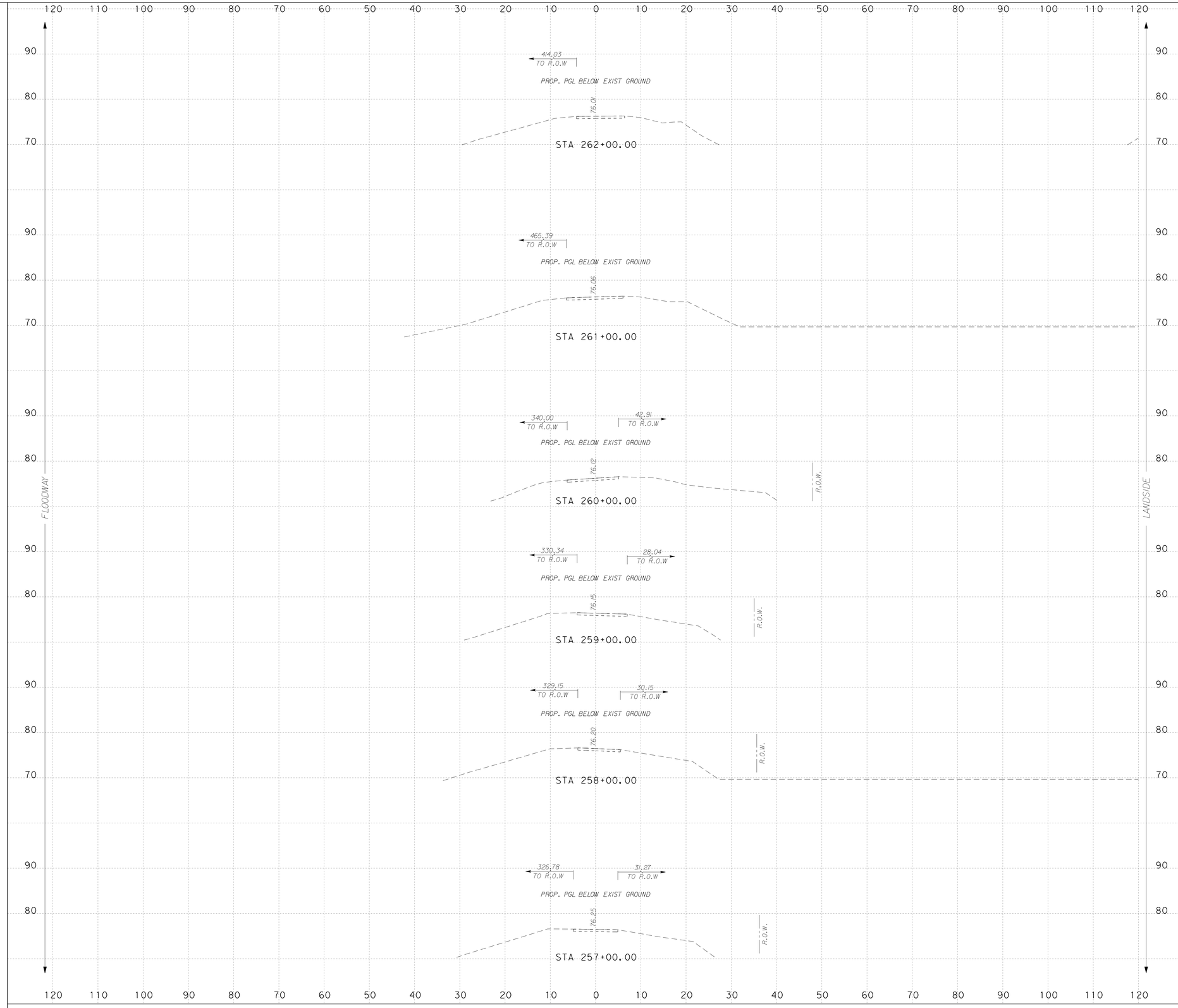

...\Dgn\0450NFS1sLVpxs02.dgn

NOTES:

SURFACE DRAINAGE SHALL BE ESTABLISHED BY THE CONTRACTOR PRIOR TO AND DURING CONSTRUCTION TO PREVENT WATER FROM PONDING WITHIN OR ADJACENT TO THE LEVEE STRUCTURE.

IT IS INTENDED THAT THE FINAL SECTION OF THE PROPOSED LEVEE SHALL FACILITATE RAPID DRAINAGE AWAY FROM THE LEVEE STRUCTURE.

SCALE: H : 1"=10'
V : 1"=10'

S&B INFRASTRUCTURE, LTD.
Engineering Management Technology

S&B Infrastructure, Ltd. Firm Registration Number: 1582

STATE OF TEXAS
PHILLIP J. PAWELEK
82739
REGISTERED PROFESSIONAL ENGINEER

The seal appearing on this document was authorized by PHILLIP J. PAWELEK P.E. 82739, on 6-11, 2009.

Phillip J. Pawelek, P.E.

NORTH FLOODWAY SOUTH (NFS1)
PROPOSED CROSS SECTIONS

SHEET 51 OF 60 SHEET

STATE	COUNTY	DRAWN BY: JL	CHECKED BY: JL	
TEXAS	HIDALGO	PROJECT NO. IBM09T0018		SHEET NO.
REHABILITATION OF NORTH FLOODWAY NORTH AND SOUTH LEVEES (FM 1015 - BASELINE RD.)				10.163

7:08:32 PM
6/10/2009
N:\Project\u0450\U0450515\800*WorkingFiles\Dgn\0450NFS1sLVpxs02.dgn

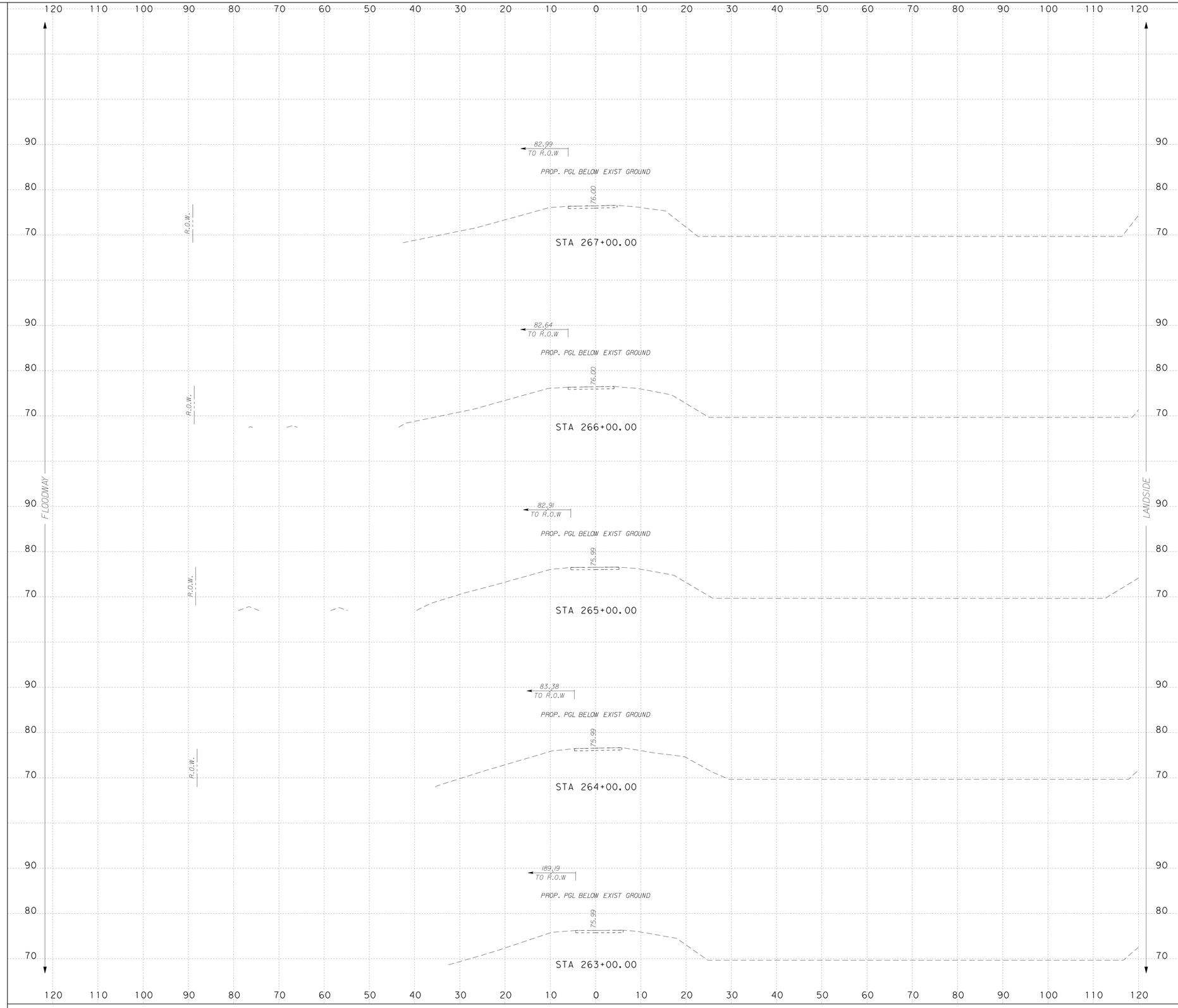

NOTES:

SURFACE DRAINAGE SHALL BE ESTABLISHED BY THE CONTRACTOR PRIOR TO AND DURING CONSTRUCTION TO PREVENT WATER FROM PONDING WITHIN OR ADJACENT TO THE LEVEE STRUCTURE.

IT IS INTENDED THAT THE FINAL SECTION OF THE PROPOSED LEVEE SHALL FACILITATE RAPID DRAINAGE AWAY FROM THE LEVEE STRUCTURE.

SCALE: H : 1"=10'
V : 1"=10'

S&B INFRASTRUCTURE, LTD.
Engineering Management Technology

S&B Infrastructure, Ltd. Firm Registration Number: 1582

STATE OF TEXAS
PHILLIP J. PAWELEK
82739
REGISTERED PROFESSIONAL ENGINEER

The seal appearing on this document was authorized by PHILLIP J. PAWELEK P.E. 82739, on 6-11, 2009

Phillip J. Pawelek, P.E.

NORTH FLOODWAY SOUTH (NFS1)
PROPOSED CROSS SECTIONS

SHEET 52 OF 60 SHEET

STATE	COUNTY	DRAWN BY: JL	CHECKED BY: JL	
TEXAS	HIDALGO	PROJECT NO. IBM09T0018		SHEET NO.
REHABILITATION OF NORTH FLOODWAY NORTH AND SOUTH LEVEES (FM 1015 - BASELINE RD.)				10.164

7:08:35 PM 6/10/2009
N:\Project\u0450\U045051\800\WorkingFiles\Dgn\0450NFS1sLVpxs02.dgn

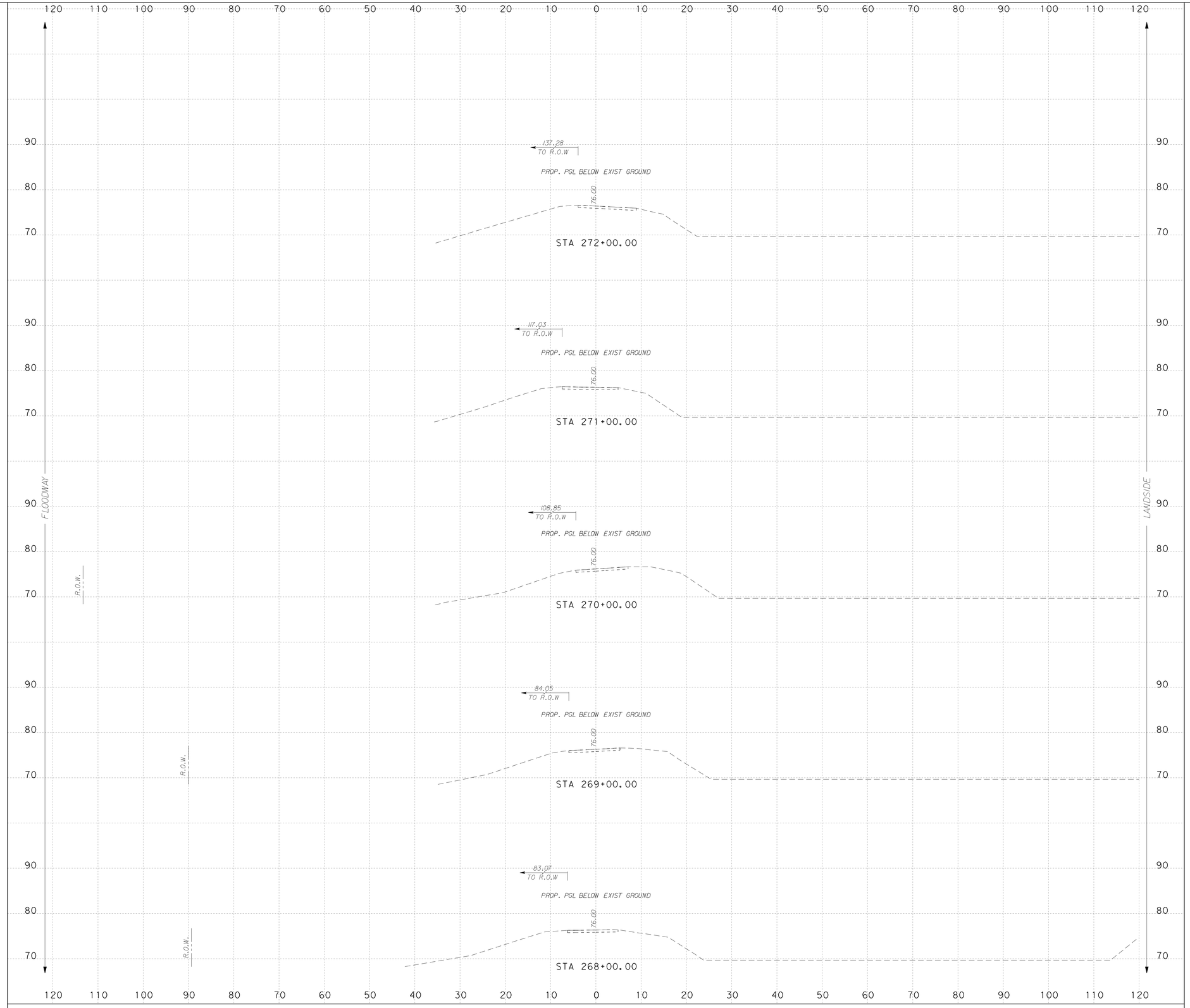

NOTES:

SURFACE DRAINAGE SHALL BE ESTABLISHED BY THE CONTRACTOR PRIOR TO AND DURING CONSTRUCTION TO PREVENT WATER FROM PONDING WITHIN OR ADJACENT TO THE LEVEE STRUCTURE.

IT IS INTENDED THAT THE FINAL SECTION OF THE PROPOSED LEVEE SHALL FACILITATE RAPID DRAINAGE AWAY FROM THE LEVEE STRUCTURE.

SCALE: H : 1"=10'
V : 1"=10'

S&B INFRASTRUCTURE, LTD.
Engineering Management Technology

S&B Infrastructure, Ltd. Firm Registration Number: 1582

STATE OF TEXAS
PHILLIP J. PAWELEK
82739
REGISTERED PROFESSIONAL ENGINEER

The seal appearing on this document was authorized by PHILLIP J. PAWELEK P.E. 82739, on 6-11, 2009

Phillip J. Pawelek, P.E.

NORTH FLOODWAY SOUTH (NFS1) PROPOSED CROSS SECTIONS

SHEET 53 OF 60 SHEET

STATE	COUNTY	DRAWN BY: JL	CHECKED BY: JL	
TEXAS	HIDALGO	PROJECT NO. IBM09T0018		SHEET NO.
REHABILITATION OF NORTH FLOODWAY NORTH AND SOUTH LEVEES (FM 1015 - BASELINE RD.)				10.165

7:08:38 PM 6/10/2009 N:\Project\u0450\U045051\800\WorkingFiles\Dgn\0450NFS1sLVpxs02.dgn

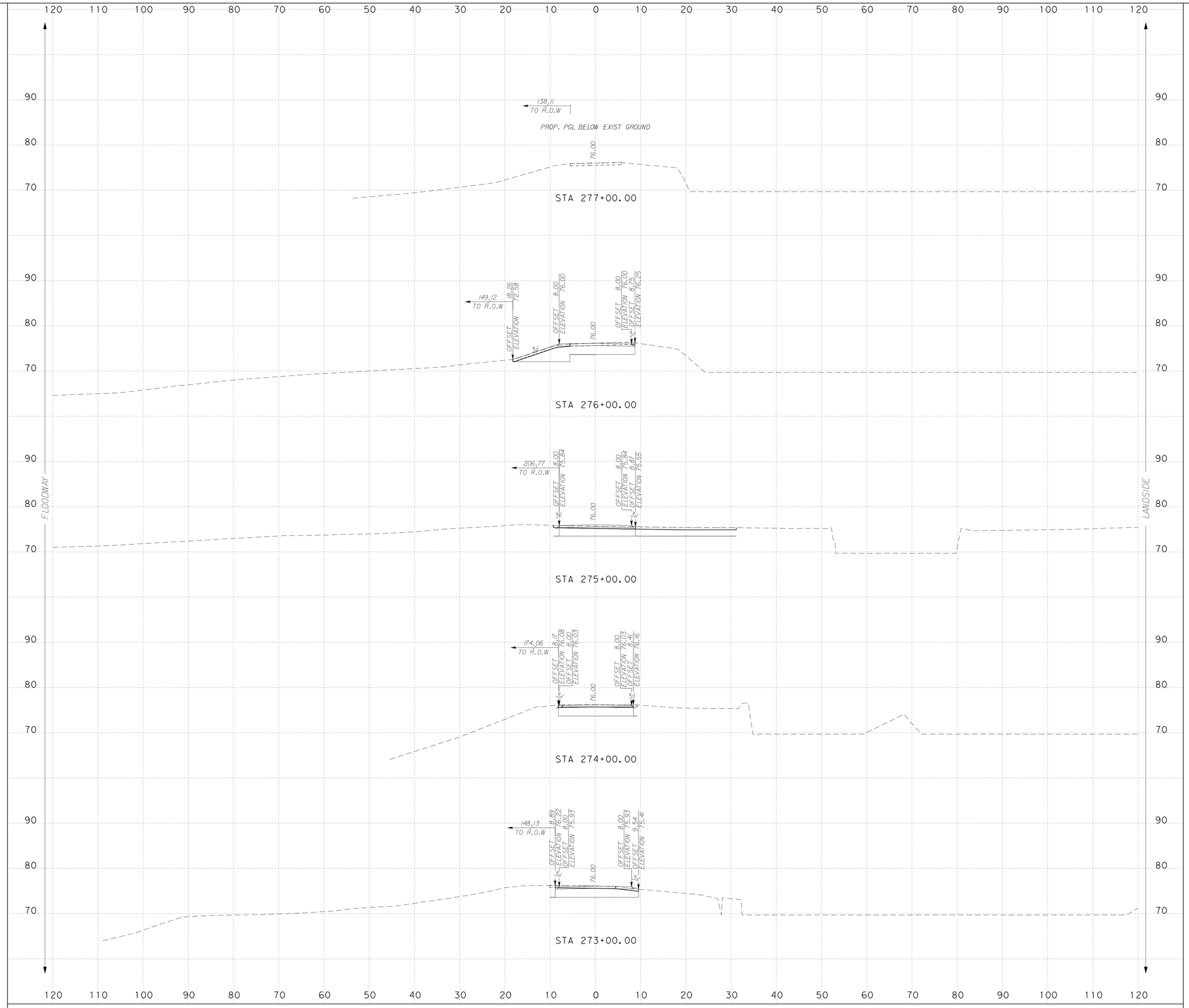

NOTES:

SURFACE DRAINAGE SHALL BE ESTABLISHED BY THE CONTRACTOR PRIOR TO AND DURING CONSTRUCTION TO PREVENT WATER FROM PONDING WITHIN OR ADJACENT TO THE LEVEE STRUCTURE.

IT IS INTENDED THAT THE FINAL SECTION OF THE PROPOSED LEVEE SHALL FACILITATE RAPID DRAINAGE AWAY FROM THE LEVEE STRUCTURE.

SCALE: H : 1"=10'
V : 1"=10'

INTERNATIONAL BOUNDARY AND WATER COMMISSION
COMISION INTERNACIONAL DE LIMITES Y AGUAS

S&B INFRASTRUCTURE, LTD.
Engineering Management Technology

S&B Infrastructure, Ltd. Firm Registration Number: 1582

STATE OF TEXAS
PHILLIP J. PAWELEK
82739
REGISTERED PROFESSIONAL ENGINEER

The seal appearing on this document was authorized by PHILLIP J. PAWELEK P.E. 82739, on 6-11, 2009.

Phillip J. Pawelek, P.E.

NORTH FLOODWAY SOUTH (NFS1) PROPOSED CROSS SECTIONS

SHEET 54 OF 60 SHEET

STATE	COUNTY	DRAWN BY: JL	CHECKED BY: JL	
TEXAS	HIDALGO	PROJECT NO. IBM09T0018		SHEET NO.
REHABILITATION OF NORTH FLOODWAY NORTH AND SOUTH LEVEES (FM 1015 - BASELINE RD.)				10.166

7:08:40 PM 6/10/2009 N:\Project\0450\0450515\800\WorkingFiles\Dgn\0450NFS1sLVpxs02.dgn

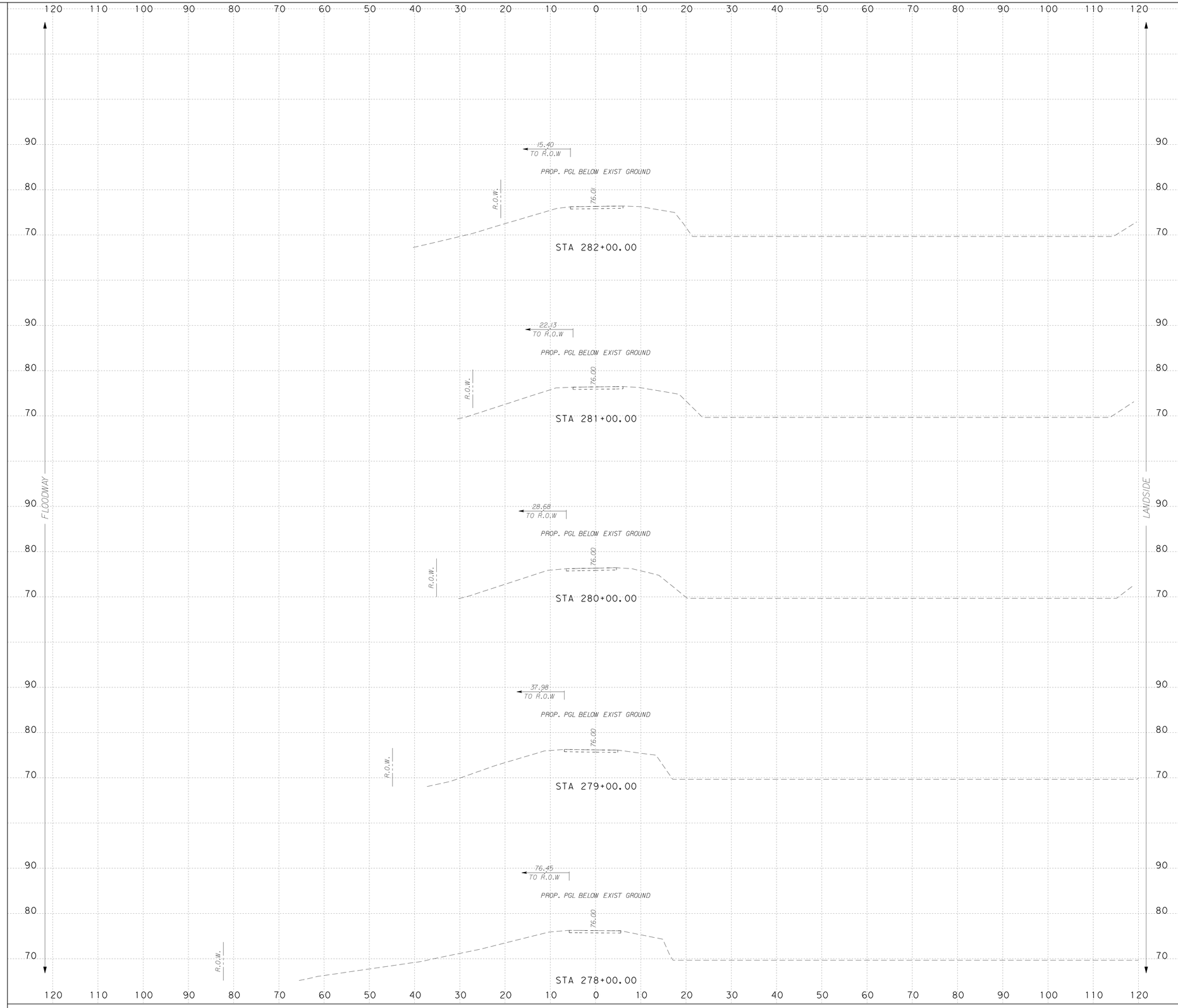

...\Dgn\0450NFS1sLVpxs02.dgn

NOTES:

SURFACE DRAINAGE SHALL BE ESTABLISHED BY THE CONTRACTOR PRIOR TO AND DURING CONSTRUCTION TO PREVENT WATER FROM PONDING WITHIN OR ADJACENT TO THE LEVEE STRUCTURE.

IT IS INTENDED THAT THE FINAL SECTION OF THE PROPOSED LEVEE SHALL FACILITATE RAPID DRAINAGE AWAY FROM THE LEVEE STRUCTURE.

SCALE: H : 1"=10'
V : 1"=10'

S&B INFRASTRUCTURE, LTD.
Engineering Management Technology

S&B Infrastructure, Ltd. Firm Registration Number: 1582

STATE OF TEXAS
PHILLIP J. PAWELEK
82739
REGISTERED PROFESSIONAL ENGINEER

The seal appearing on this document was authorized by PHILLIP J. PAWELEK P.E. 82739, on 6-11, 2009.

Phillip J. Pawelek, P.E.

NORTH FLOODWAY SOUTH (NFS1)
PROPOSED CROSS SECTIONS

SHEET 55 OF 60 SHEET

STATE	COUNTY	DRAWN BY: JL	CHECKED BY: JL	
TEXAS	HIDALGO	PROJECT NO. IBM09T0018		SHEET NO.
REHABILITATION OF NORTH FLOODWAY NORTH AND SOUTH LEVEES (FM 1015 - BASELINE RD.)				10.167

7:08:43 PM
6/10/2009
N:\Project\u0450\U0450515\800*WorkingFiles\Dgn\0450NFS1sLVpxs02.dgn

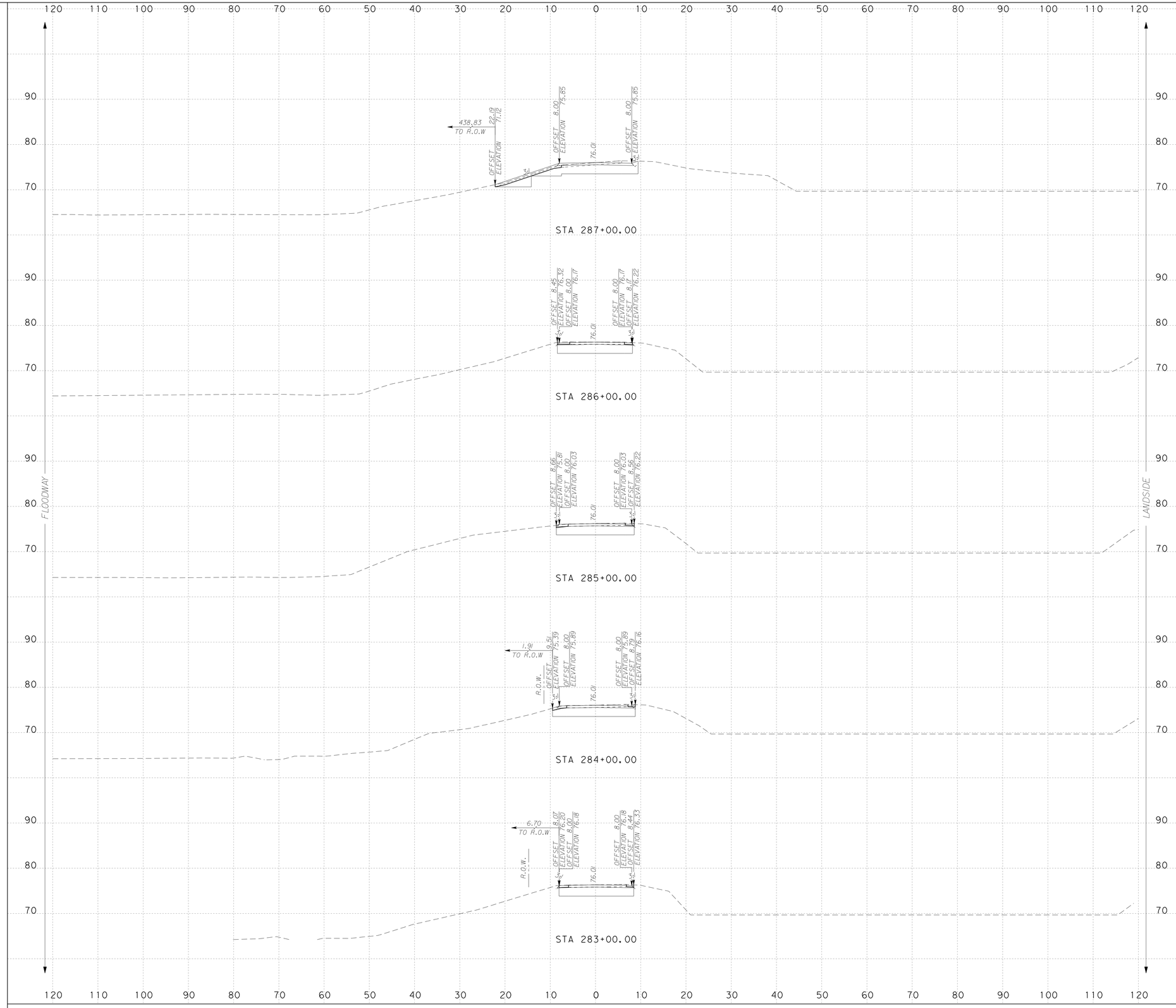

NOTES:

SURFACE DRAINAGE SHALL BE ESTABLISHED BY THE CONTRACTOR PRIOR TO AND DURING CONSTRUCTION TO PREVENT WATER FROM PONDING WITHIN OR ADJACENT TO THE LEVEE STRUCTURE.

IT IS INTENDED THAT THE FINAL SECTION OF THE PROPOSED LEVEE SHALL FACILITATE RAPID DRAINAGE AWAY FROM THE LEVEE STRUCTURE.

SCALE: H : 1"=10'
V : 1"=10'

INTERNATIONAL BOUNDARY AND WATER COMMISSION
COMISION INTERNACIONAL DE LIMITES Y AGUAS

S&B INFRASTRUCTURE, LTD.
Engineering Management Technology

S&B Infrastructure, Ltd. Firm Registration Number: 1582

STATE OF TEXAS
PHILLIP J. PAWELEK
82739
REGISTERED PROFESSIONAL ENGINEER

The seal appearing on this document was authorized by PHILLIP J. PAWELEK P.E. 82739, on 6-11, 2009

Phillip J. Pawelek, P.E.

NORTH FLOODWAY SOUTH (NFS1) PROPOSED CROSS SECTIONS

SHEET 56 OF 60 SHEET

STATE	COUNTY	DRAWN BY: JL	CHECKED BY: JL	
TEXAS	HIDALGO	PROJECT NO. IBM09T0018		SHEET NO.
REHABILITATION OF NORTH FLOODWAY NORTH AND SOUTH LEVEES (FM 1015 - BASELINE RD.)				10.168

7:08:46 PM 6/10/2009 N:\Project\0450\U0450515\800#WorkingFiles\Dgn\0450NFS1sLVpxs02.dgn

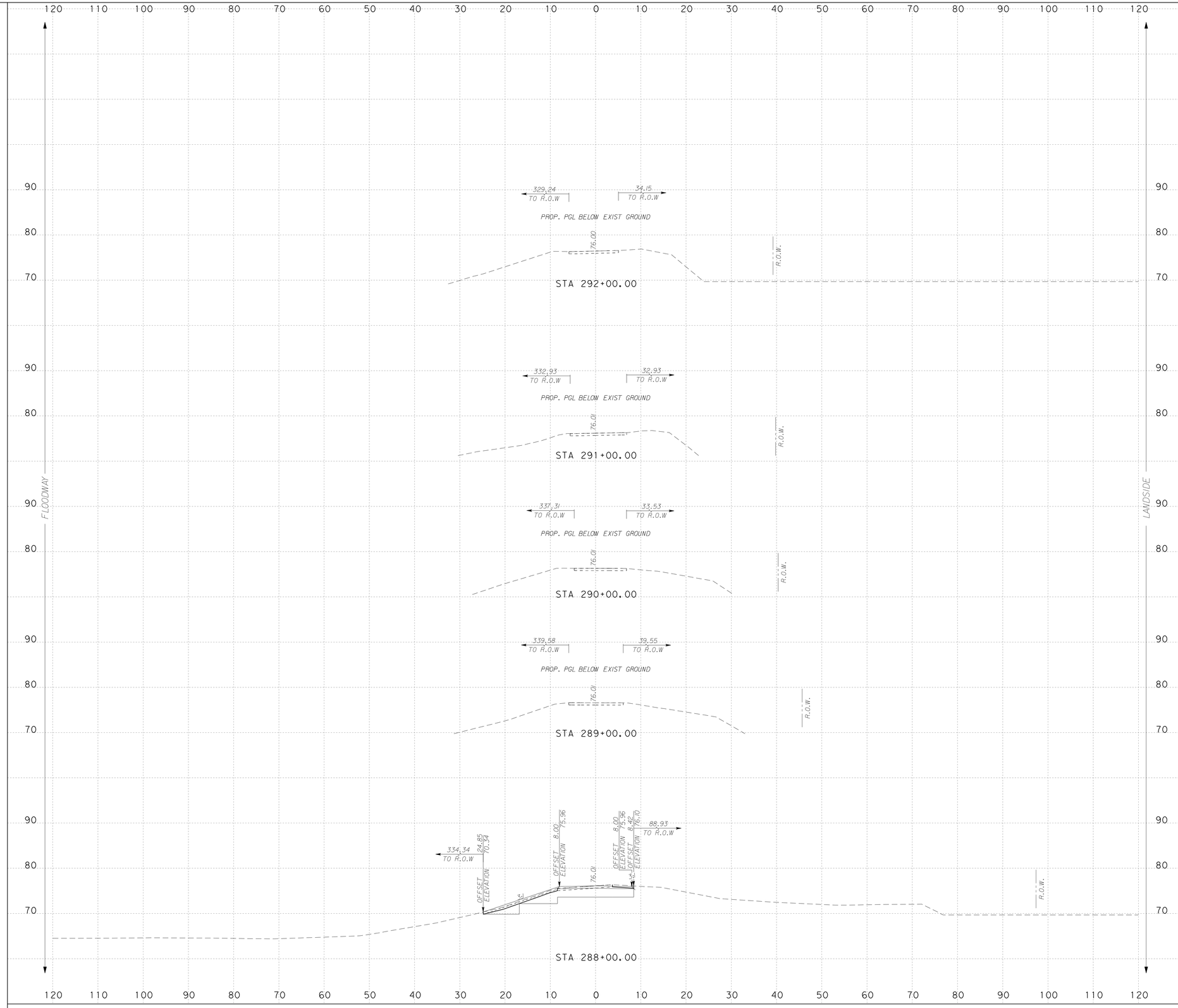

NOTES:

SURFACE DRAINAGE SHALL BE ESTABLISHED BY THE CONTRACTOR PRIOR TO AND DURING CONSTRUCTION TO PREVENT WATER FROM PONDING WITHIN OR ADJACENT TO THE LEVEE STRUCTURE.

IT IS INTENDED THAT THE FINAL SECTION OF THE PROPOSED LEVEE SHALL FACILITATE RAPID DRAINAGE AWAY FROM THE LEVEE STRUCTURE.

SCALE: H : 1"=10'
V : 1"=10'

S&B INFRASTRUCTURE, LTD.
Engineering Management Technology

S&B Infrastructure, Ltd. Firm Registration Number: 1582

STATE OF TEXAS
PHILLIP J. PAWELEK
82739
REGISTERED PROFESSIONAL ENGINEER

The seal appearing on this document was authorized by PHILLIP J. PAWELEK P.E. 82739, on 6-11, 2009

Phillip J. Pawelek, P.E.

NORTH FLOODWAY SOUTH (NFS1)
PROPOSED CROSS SECTIONS

SHEET 57 OF 60 SHEET

STATE	COUNTY	DRAWN BY: JL	CHECKED BY: JL	
TEXAS	HIDALGO	PROJECT NO. IBM09T0018		SHEET NO.
REHABILITATION OF NORTH FLOODWAY NORTH AND SOUTH LEVEES (FM 1015 - BASELINE RD.)				10.169

7:08:49 PM 6/10/2009 N:\Project\u0450\U045051\800\WorkingFiles\Dgn\0450NFS1sLVpxs02.dgn

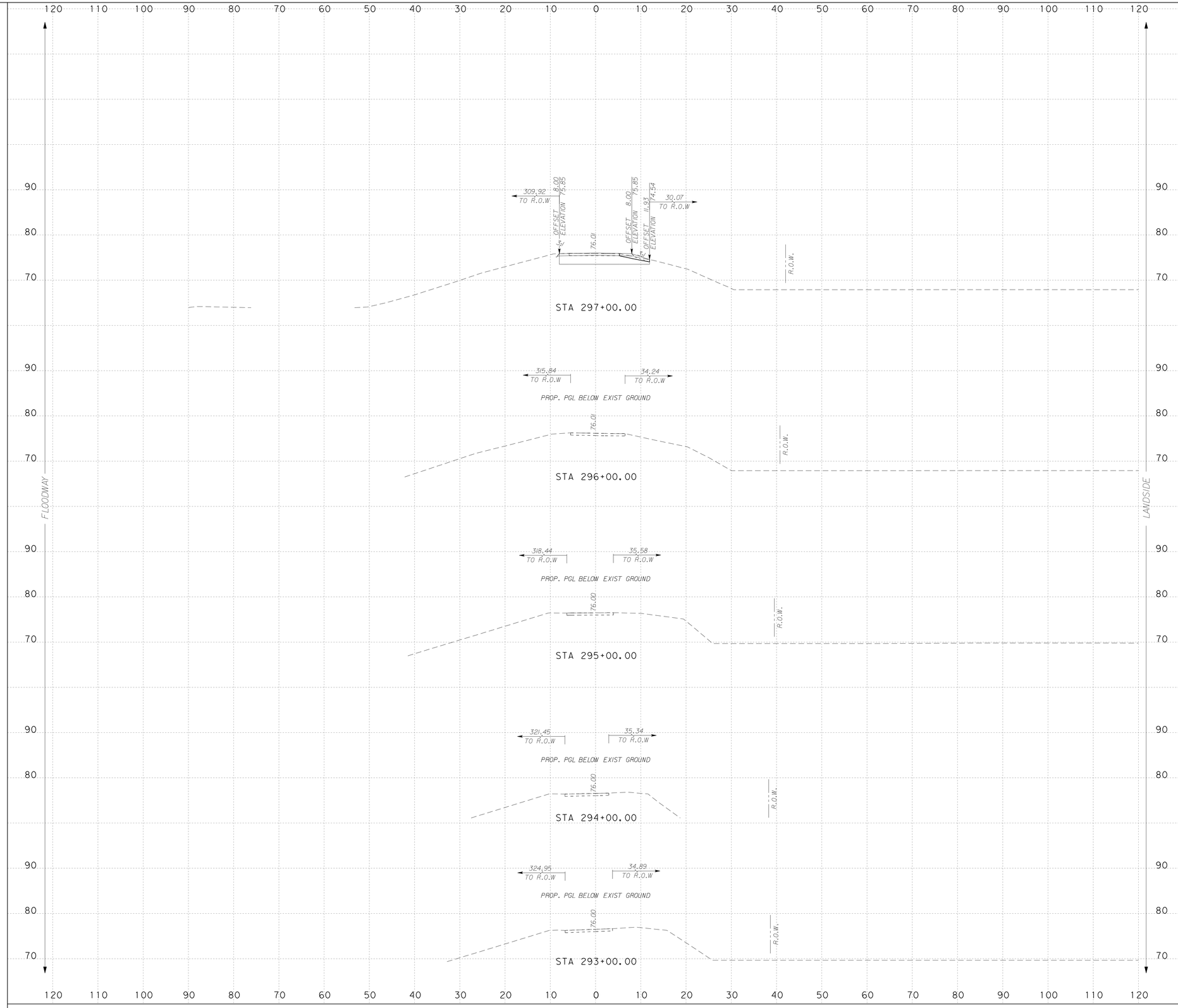

...\Dgn\0450NFS1sLVpxs02.dgn

NOTES:

SURFACE DRAINAGE SHALL BE ESTABLISHED BY THE CONTRACTOR PRIOR TO AND DURING CONSTRUCTION TO PREVENT WATER FROM PONDING WITHIN OR ADJACENT TO THE LEVEE STRUCTURE.

IT IS INTENDED THAT THE FINAL SECTION OF THE PROPOSED LEVEE SHALL FACILITATE RAPID DRAINAGE AWAY FROM THE LEVEE STRUCTURE.

SCALE: H : 1"=10'
V : 1"=10'

S&B INFRASTRUCTURE, LTD.
Engineering Management Technology

S&B Infrastructure, Ltd. Firm Registration Number: 1582

STATE OF TEXAS
PHILLIP J. PAWELEK
82739
REGISTERED PROFESSIONAL ENGINEER

The seal appearing on this document was authorized by PHILLIP J. PAWELEK P.E. 82739, on 6-11, 2009.

Phillip J. Pawelek, P.E.

NORTH FLOODWAY SOUTH (NFS1)
PROPOSED CROSS SECTIONS

SHEET 58 OF 60 SHEET

STATE	COUNTY	DRAWN BY: JL	CHECKED BY: JL	
TEXAS	HIDALGO	PROJECT NO. IBM09T0018		SHEET NO.
REHABILITATION OF NORTH FLOODWAY NORTH AND SOUTH LEVEES (FM 1015 - BASELINE RD.)				10.170

7:08:52 PM
6/10/2009
N:\Project\u0450\U0450515\800\WorkingFiles\Dgn\0450NFS1sLVpxs02.dgn

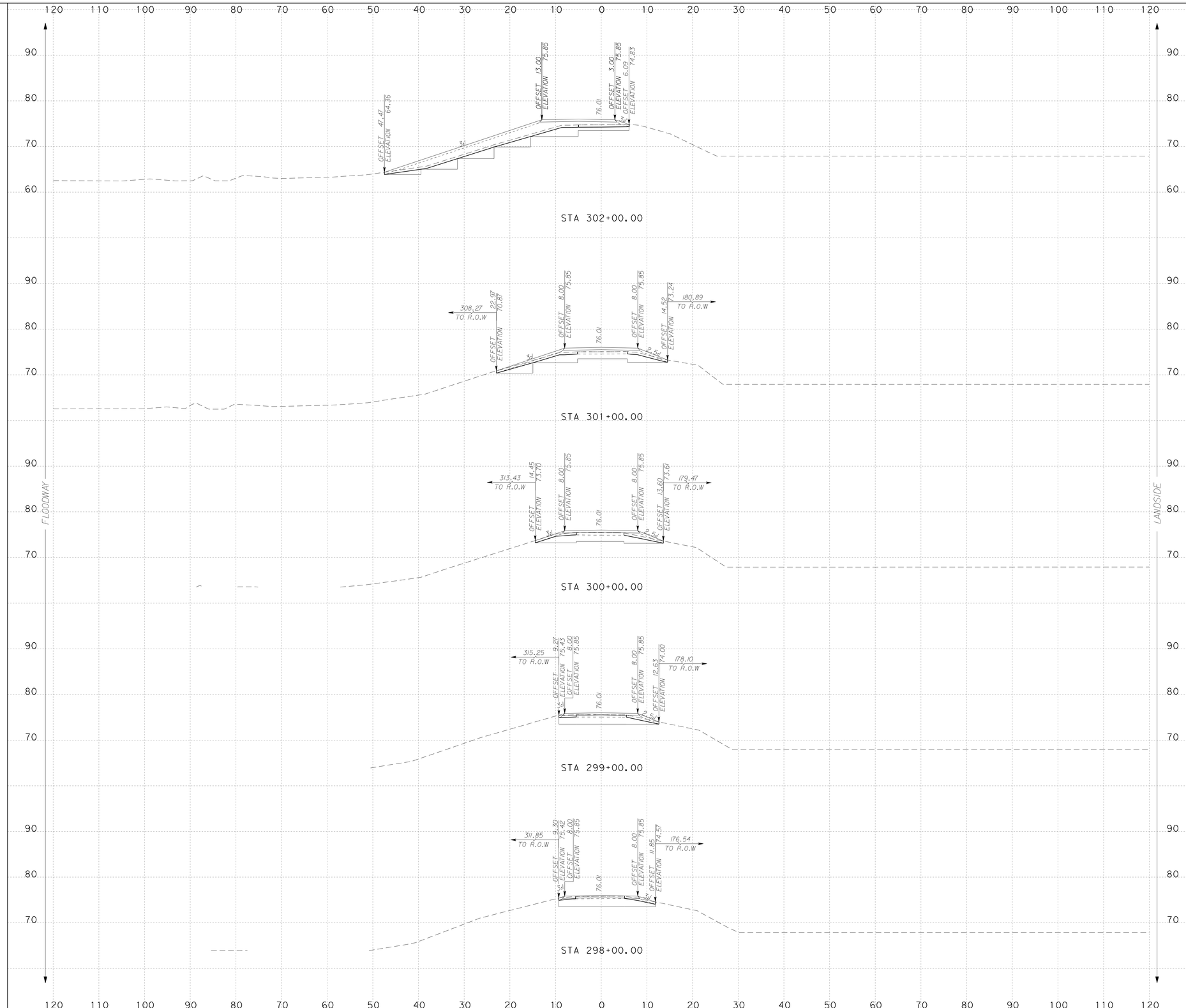

NOTES:

SURFACE DRAINAGE SHALL BE ESTABLISHED BY THE CONTRACTOR PRIOR TO AND DURING CONSTRUCTION TO PREVENT WATER FROM PONDING WITHIN OR ADJACENT TO THE LEVEE STRUCTURE.

IT IS INTENDED THAT THE FINAL SECTION OF THE PROPOSED LEVEE SHALL FACILITATE RAPID DRAINAGE AWAY FROM THE LEVEE STRUCTURE.

SCALE: H : 1"=10'
V : 1"=10'

INTERNATIONAL BOUNDARY AND WATER COMMISSION
COMISION INTERNACIONAL DE LIMITES Y AGUAS

S&B INFRASTRUCTURE, LTD.
Engineering Management Technology

S&B Infrastructure, Ltd. Firm Registration Number: 1582

STATE OF TEXAS
PHILLIP J. PAWELEK
82739
REGISTERED
PROFESSIONAL ENGINEER

The seal appearing on this document was authorized by PHILLIP J. PAWELEK P.E. 82739, on 6-11, 2009.

Phillip J. Pawelek, P.E.

NORTH FLOODWAY SOUTH (NFS1) PROPOSED CROSS SECTIONS

SHEET 59 OF 60 SHEET

STATE	COUNTY	DRAWN BY: JL	CHECKED BY: JL	
TEXAS	HIDALGO	PROJECT NO. IBM09T0018		SHEET NO.
REHABILITATION OF NORTH FLOODWAY NORTH AND SOUTH LEVEES (FM 1015 - BASELINE RD.)				10.171

7:08:55 PM 6/10/2009 N:\Project\u2450\U450515\800*WorkingFiles\Dgn\0450NFS1sLVpxs02.dgn

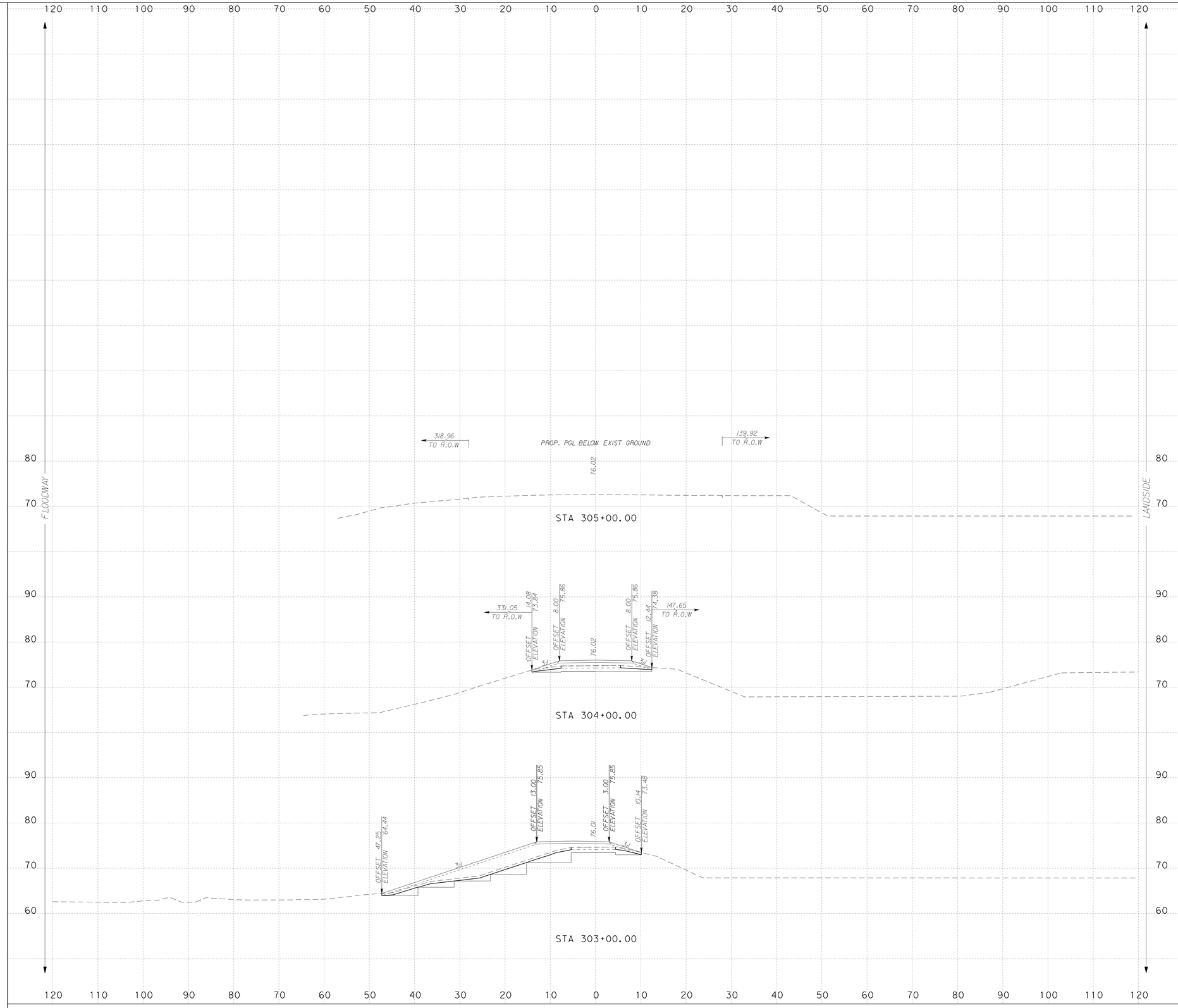

NOTES:

SURFACE DRAINAGE SHALL BE ESTABLISHED BY THE CONTRACTOR PRIOR TO AND DURING CONSTRUCTION TO PREVENT WATER FROM PONDING WITHIN OR ADJACENT TO THE LEVEE STRUCTURE.

IT IS INTENDED THAT THE FINAL SECTION OF THE PROPOSED LEVEE SHALL FACILITATE RAPID DRAINAGE AWAY FROM THE LEVEE STRUCTURE.

SCALE: H : 1"=10'
V : 1"=10'

S&B INFRASTRUCTURE, LTD.
Engineering Management Technology

S&B Infrastructure, Ltd. Firm Registration Number: 1582

STATE OF TEXAS
PHILLIP J. PAWELEK
82739
REGISTERED PROFESSIONAL ENGINEER

The seal appearing on this document was authorized by PHILLIP J. PAWELEK P.E. 82739, on 6-11, 2009

Phillip J. Pawelek, P.E.

NORTH FLOODWAY SOUTH (NFS1) PROPOSED CROSS SECTIONS

SHEET 60 OF 60 SHEET

STATE	COUNTY	DRAWN BY: JL	CHECKED BY: JL	
TEXAS	HIDALGO	PROJECT NO. IBM09T0018		SHEET NO.
REHABILITATION OF NORTH FLOODWAY NORTH AND SOUTH LEVEES (FM 1015 - BASELINE RD.)				10.172

N:\Project\u0450\U045051\800\WorkingFiles\Dgn\0450NFS1sLVpxs02.dgn
6/10/2009 7:08:58 PM

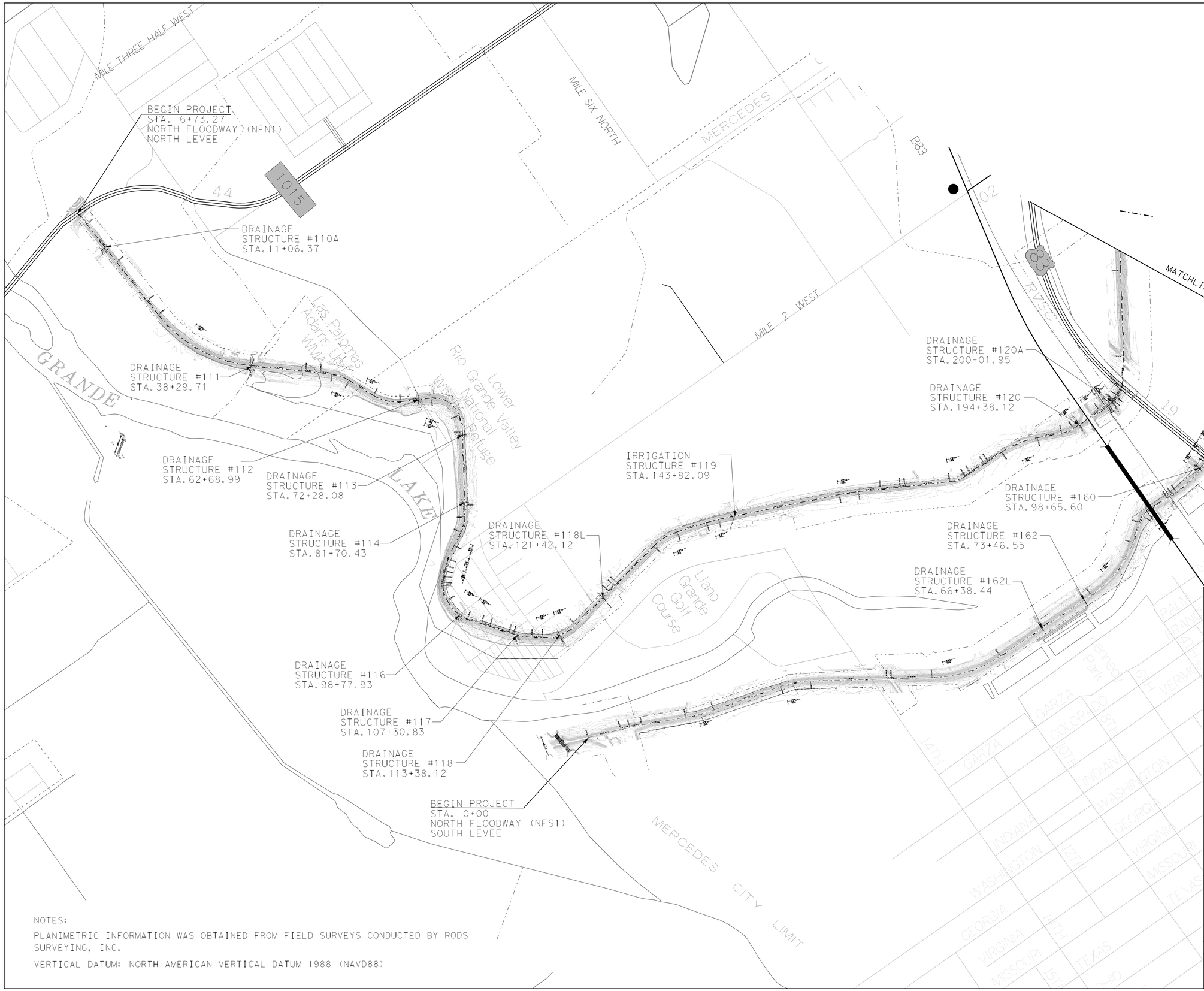

NOTES:

PLANIMETRIC INFORMATION WAS OBTAINED FROM FIELD SURVEYS CONDUCTED BY RODS SURVEYING, INC.

VERTICAL DATUM: NORTH AMERICAN VERTICAL DATUM 1988 (NAVD88)

INTERNATIONAL BOUNDARY AND WATER COMMISSION
COMISION INTERNACIONAL DE LIMITES Y AGUAS

S&B INFRASTRUCTURE, LTD.

Engineering Management Technology

S&B Infrastructure, Ltd. Firm Registration Number: 1582

STATE OF TEXAS
PHILLIP J. PAWELEK
82739
REGISTERED PROFESSIONAL ENGINEER

The seal appearing on this document was authorized by PHILLIP J. PAWELEK P.E. 82739, on 7-29, 2009

Phillip J. Pawelek, P.E.

REVISED 07/29/2009

FIGURE 4
STRUCTURE LAYOUT MAP

SHEET 1 OF 4 SHEETS

STATE	COUNTY	DRAWN BY: JL/JJL	CHECKED BY: PP	
TEXAS	HIDALGO	PROJECT NO. IBM09T0018		SHEET NO.
REHABILITATION OF NORTH FLOODWAY NORTH AND SOUTH LEVEES (FM 1015 TO BASELINE RD)				12.01

m:\projects\ub450\ub450515\800*workinfiles\dgn\045051551L01.dgn

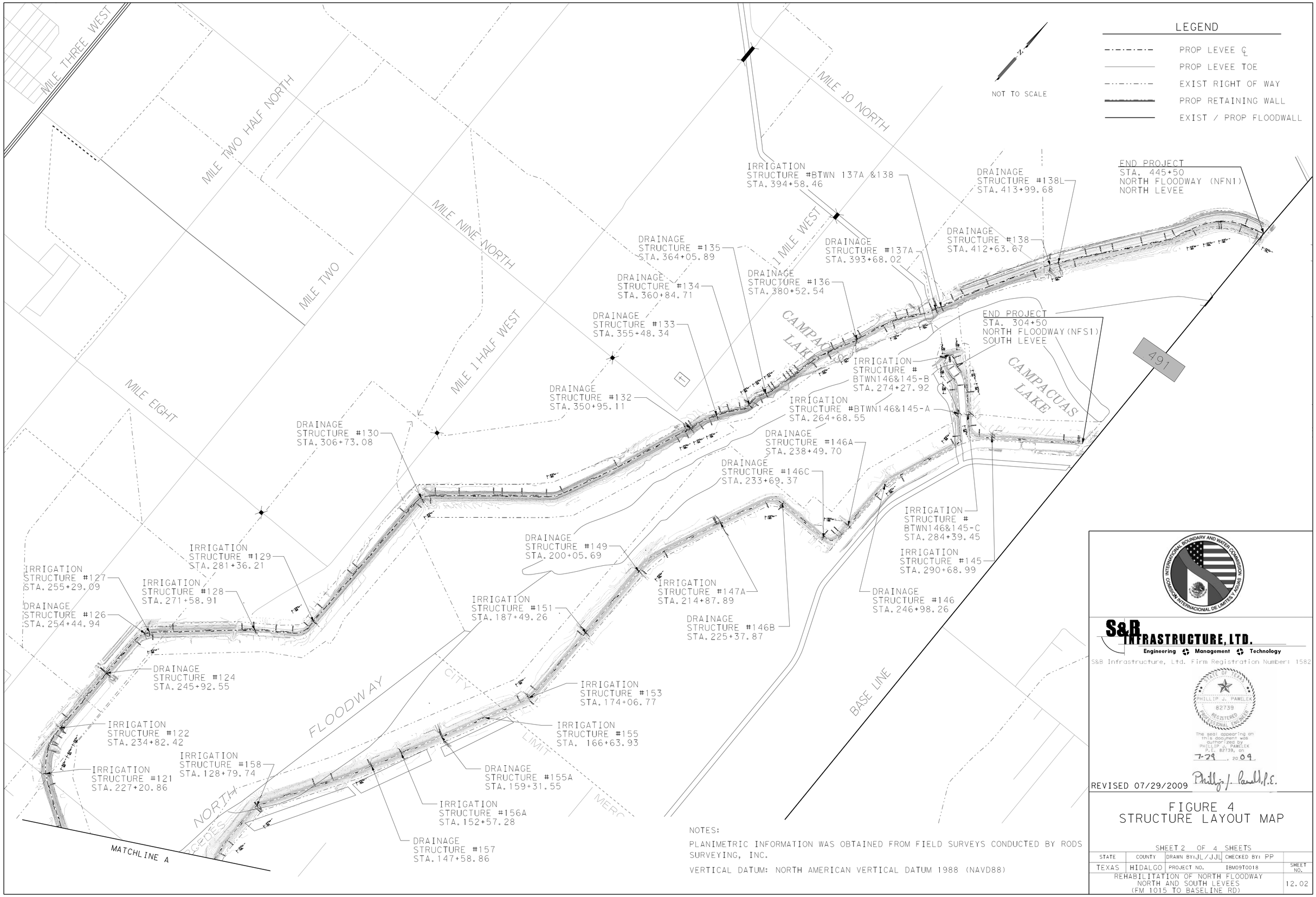

NOTES:

PLANIMETRIC INFORMATION WAS OBTAINED FROM FIELD SURVEYS CONDUCTED BY RODS SURVEYING, INC.

VERTICAL DATUM: NORTH AMERICAN VERTICAL DATUM 1988 (NAVD88)

S&B INFRASTRUCTURE, LTD.
Engineering Management Technology
S&B Infrastructure, Ltd. Firm Registration Number: 1582

STATE OF TEXAS
PHILLIP J. PAWELEK
82739
REGISTERED PROFESSIONAL ENGINEER

The seal appearing on this document was authorized by PHILLIP J. PAWELEK P.E. 82739, on 7-29, 2009

REVISED 07/29/2009 Phillip J. Pawelek, P.E.

FIGURE 4
STRUCTURE LAYOUT MAP

SHEET 2 OF 4 SHEETS

STATE	COUNTY	DRAWN BY: JL/JJL	CHECKED BY: PP	
TEXAS	HIDALGO	PROJECT NO.	IBM09T0018	SHEET NO.
REHABILITATION OF NORTH FLOODWAY NORTH AND SOUTH LEVEES (FM 1015 TO BASELINE RD)				12.02

n:\project\u0450\u0450515\800*workingfiles\dgn\0450515SSTLY02.dgn

SUMMARY OF NORTH FLOODWAY NORTH LEVEE STRUCTURES

Levee Reach	STRUCTURE STATION	COORDINATES		STRUCTURE NO.	STRUCTURE SIZE	STRUCTURE USAGE	IBWC LICENSE
		X (EASTING)	Y (NORTHING)				
NFN1	11+06.37	1,161,606.02	16,569,879.88	110A	18"	Drainage	
NFN1	38+29.71	1,164,101.92	16,570,707.11	111	3' X 3'	Drainage	
NFN1	62+68.99	1,165,765.84	16,572,416.58	112	18"	Drainage	
NFN1	72+28.08	1,166,519.50	16,572,666.09	113	18"	Drainage	
NFN1	81+70.43	1,167,328.87	16,572,183.46	114	24"	Drainage	
NFN1	98+77.93	1,168,612.03	16,571,273.90	116	15"	Drainage	
NFN1	107+30.83	1,169,284.73	16,571,794.63	117	18"	Drainage	
NFN1	113+38.12	1,169,608.66	16,572,299.72	118	18"	Drainage	
NFN1	121+42.12	1,169,493.48	16,573,088.77	118L	18" landside/36"floodside	Drainage	Llano Grande RV Park LSF/G-904
NFN1	143+82.09	1,169,533.44	16,575,261.70	119	24"	Irrigation	
NFN1	194+38.12	1,171,063.68	16,580,007.20	120	3' X 3'	Drainage	
NFN1	200+01.95	1,171,043.56	16,580,568.51	120A	18"	Drainage	
NFN1	227+20.86	1,168,856.26	16,582,109.10	121	18"	Irrigation	
NFN1	234+82.42	1,168,555.08	16,582,783.90	122	18"	Irrigation	
NFN1	245+92.55	1,168,522.37	16,583,893.54	124	2-4' X 4'	Drainage	
NFN1	254+44.94	1,168,555.36	16,584,738.97	126	18"	Drainage	
NFN1	255+29.09	1,168,602.58	16,584,808.40	127	18"	Irrigation	
NFN1	271+58.91	1,169,794.76	16,585,919.49	128	24"	Irrigation	
NFN1	281+36.21	1,170,384.99	16,586,621.85	129	24"	Irrigation	
NFN1	306+73.08	1,170,361.69	16,589,155.76	130	4' X 4'	Drainage	
NFN1	350+95.11	1,172,758.17	16,592,732.57	132	24"	Drainage	
NFN1	355+48.34	1,172,926.31	16,593,150.30	133	24'	Drainage	
NFN1	360+84.71	1,173,195.94	16,593,605.46	134	18"	Drainage	
NFN1	364+05.89	1,173,268.78	16,593,909.05	135	24'	Drainage	
NFN1	380+52.54	1,173,766.00	16,595,469.21	136	30"	Drainage	
NFN1	393+68.02	1,174,363.24	16,596,631.45	137A=137	24"	Drainage	
NFN1	394+58.46	1,174,403.04	16,596,715.64	BTWN 137A & 138	12X14	Irrigation	
NFN1	412+63.67	1,175,228.36	16,598,315.27	138	4' X 4'	Drainage	
NFN1	413+99.68	1,175,301.95	16,598,429.65	138L	18"	Drainage	City Of Weslaco LSF/G-288(Operated by District # 9)

S&B INFRASTRUCTURE, LTD.
Engineering Management Technology

S&B Infrastructure, Ltd. Firm Registration Number: 1582

REVISED 07/29/2009

STRUCTURES LAYOUT

SHEET 3 OF 4 SHEET

STATE	COUNTY	DRAWN BY:JL/JJL	CHECKED BY: PP	
TEXAS	HIDALGO	PROJECT NO.	IBM09T0018	SHEET NO.
REHABILITATION OF NORTH FLOODWAY NORTH AND SOUTH LEVEES (FM 1015 TO BASELINE RD)				12.03

m:\project\u0450\u045051580\workingfiles\dgn\U450NFNISONE005.dgn

Levee Reach	STRUCTURE STATION	COORDINATES		STRUCTURE NO.	STRUCTURE SIZE	STRUCTURE USAGE	IBWC LICENSE
		X (EASTING)	Y (NORTHING)				
NFS1	66+38.44	1,173,179.20	16,578,029.45	162L	36"	Drainage	City of Mercedes LSFG/-654
NFS1	73+46.55	1,173,160.98	16,578,737.43	162	24"	Drainage	
NFS1	98+65.60	1,172,511.37	16,581,101.72	160	4' X 4'	Drainage	
NFS1	115+04.74	1,171,774.62	16,582,550.95	159	18"	Irrigation	
NFS1	128+79.74	1,171,626.49	16,583,909.58	158	24"	Irrigation	
NFS1	147+58.86	1,172,544.18	16,585,548.18	157	18"	Drainage	
NFS1	152+57.28	1,172,758.77	16,585,998.19	156A	24"	Irrigation	
NFS1	N/A	N/A	N/A	156	24"	Irrigation	
NFS1	159+31.55	1,173,048.99	16,586,606.81	155A	24"	Drainage	
NFS1	166+63.93	1,173,357.29	16,587,271.13	155	24"	Irrigation	
NFS1	174+06.77	1,173,655.87	16,587,950.37	153	24"	Irrigation	
NFS1	187+49.26	1,173,652.06	16,589,291.25	151	24"	Irrigation	
NFS1	200+05.69	1,173,625.51	16,590,547.39	149	24"	Drainage	
NFS1	214+87.89	1,174,075.46	16,591,947.37	147A	18"	Irrigation	
NFS1	225+37.87	1,174,585.99	16,592,813.39	146B	18"	Drainage	
NFS1	233+69.37	1,175,417.26	16,592,831.60	146C	24"	Drainage	
NFS1	238+49.70	1,175,577.29	16,593,228.84	146A	18"	Drainage	
NFS1	246+98.26	1,175,586.15	16,594,076.59	146	24"	Drainage	
NFS1	264+68.55	1,175,699.24	16,595,660.39	BTWN 146 & 145-A	16" PVC	Irrigation	
NFS1	274+27.92	1,174,993.85	16,596,230.96	BTWN 146 & 145-B	12 X 14	Irrigation	
NFS1	284+39.45	1,175,817.81	16,595,739.57	BTWN 146 & 145-C	24"/12" PVC	Irrigation	
NFS1	290+68.99	1,176,334.95	16,595,723.18	145	18"	Irrigation	

S&B INFRASTRUCTURE, LTD.
Engineering Management Technology

S&B Infrastructure, Ltd. Firm Registration Number: 1582

REVISED 07/29/2009

STRUCTURES LAYOUT

SHEET 4 OF 4 SHEET

STATE	COUNTY	DRAWN BY: JL/JJL	CHECKED BY: PP	
TEXAS	HIDALGO	PROJECT NO.	IBM09T0018	SHEET NO.
REHABILITATION OF NORTH FLOODWAY NORTH AND SOUTH LEVEES (FM 1015 TO BASELINE RD)				12.04

n:\project\u0450\u0450515\800*workingfiles\dgn\0450NFS1SGNE006.dgn

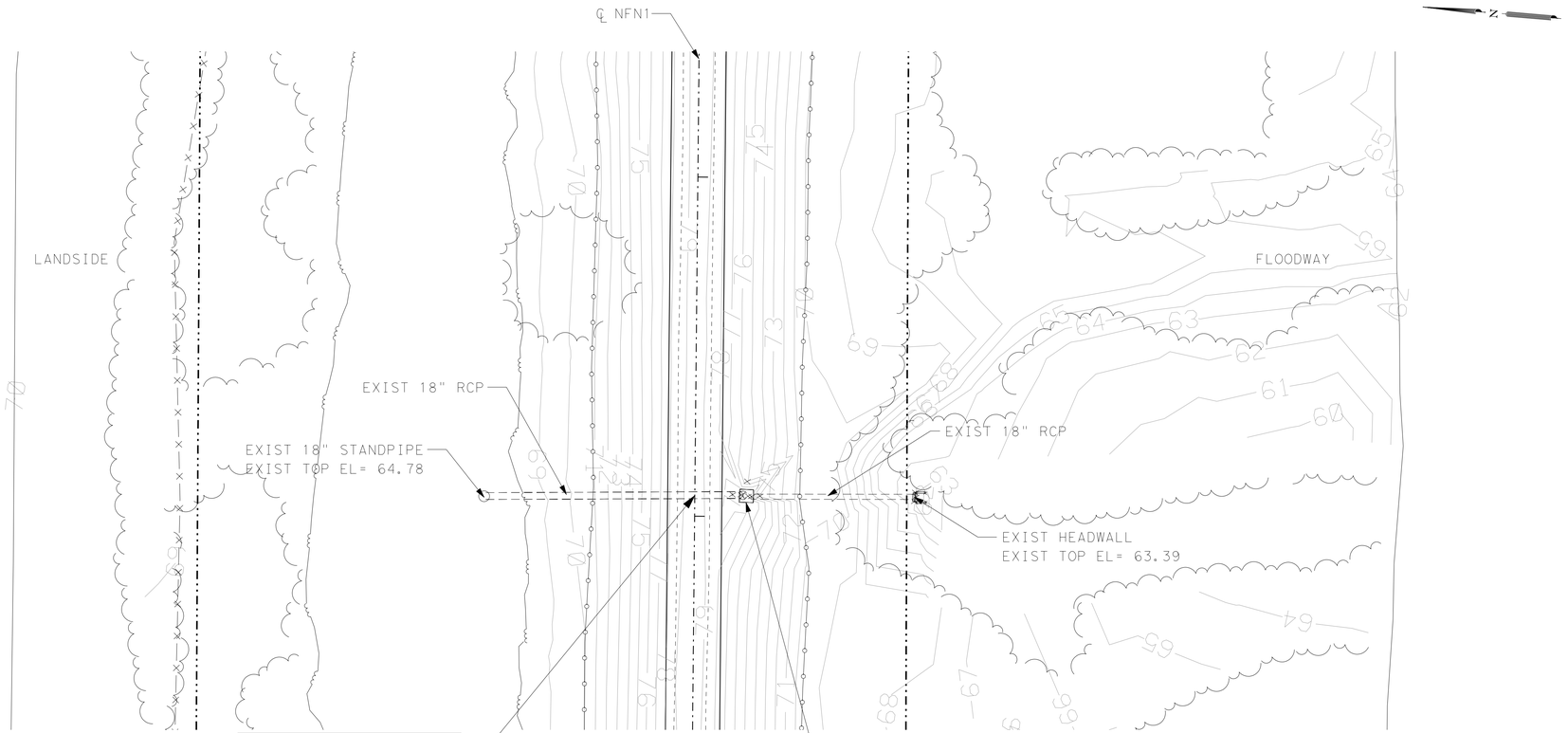

STRUCTURE TYPE:
DRAINAGE

SCALE H: 1"=20'
V: 1"=10'

PLAN VIEW LEGEND

- PROP CENTERLINE
- EXIST RIGHT-OF-WAY
- EXIST GEOTECHNICAL BORE
- EXIST FLOODWALL
- EL-OH — EXIST OVERHEAD UTILITY LINE
- EXIST SIGN
- 101 — EXIST CONTOURS
- EXIST LEVEE TOE
- F/O — EXIST FIBER OPTIC LINE
- GAS — EXIST GAS LINE
- W — EXIST WATER LINE
- T — EXIST TELEPHONE LINE
- X — EXIST FENCE
- PROP SEDIMENT CONTROL FENCE
- WATER BOUNDARY
- PROP LEVEE MAINTENANCE ROAD

NOTES:

1. CULVERT INFORMATION TAKEN FROM AS BUILT PROVIDED BY IBWC IF AVAILABLE.
2. CULVERTS WERE NOT CHECKED FOR HYDRAULICS ADEQUACY UNDER THIS TASK ORDER.
3. FOR GATEWELL ADJUSTMENT REFER TO SHEETS 12.58 & 12.59.
4. FOR CULVERT EXTENSION REFER TO SHEETS 12.60, & 12.61.
5. FOR CURB EXTENSION REFER TO SHEET 12.57.

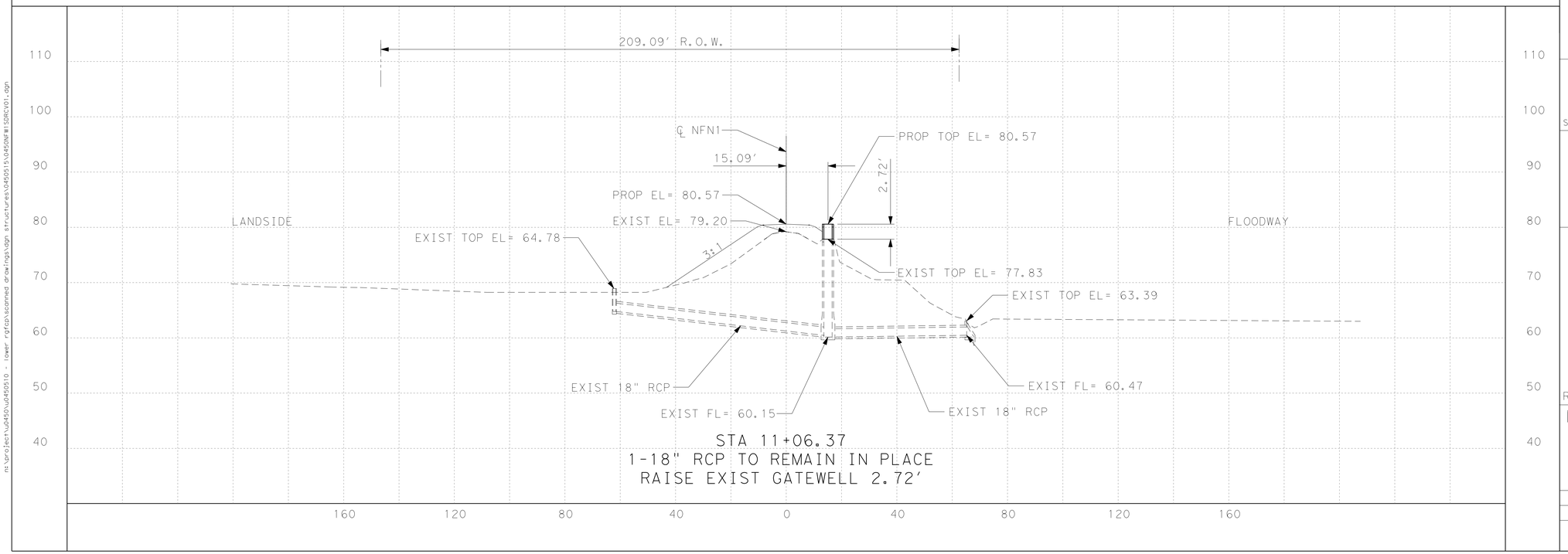

INTERNATIONAL BOUNDARY AND WATER COMMISSION
COMISION INTERNACIONAL DE LIMITES Y AGUAS

S&B INFRASTRUCTURE, LTD.
Engineering Management Technology
S&B Infrastructure, Ltd. Firm Registration Number: 1582

DL, INC.
DOS LOGISTICS, INC.
212 W. 3rd Sreet Weslaco, Tx. 78596
Phone: (956) 968-8800 Fax: (956) 447-8194
Dos Logistics, Inc. Firm Registration Number: F-9225

STATE OF TEXAS
JOSE G. REYES JR.
93827
LICENSED PROFESSIONAL ENGINEER

The seal appearing on this document was authorized by JOSE G. REYES JR. P.E. 93827 on JUL 29 20 09

P.E.

REVISED 07/29/2009

NORTH FLOODWAY NORTH LEVEE (NFN1) STRUCTURE NO. 110A STA 11+06.37

SHEET 1 OF 50

STATE	COUNTY	DRAWN BY:	CHECKED BY:	
TEXAS	HIDALGO	PROJECT NO.	IBM09T0018	SHEET NO.
REHABILITATION OF NORTH FLOODWAY NORTH AND SOUTH LEVEES (FM 1015 TO BASELINE RD)				12.05

ns:\project\p450\p450510 - lower rgfcp\scanned drawings\dgn structures\045015\p450NFW1SDRCV01.dgn

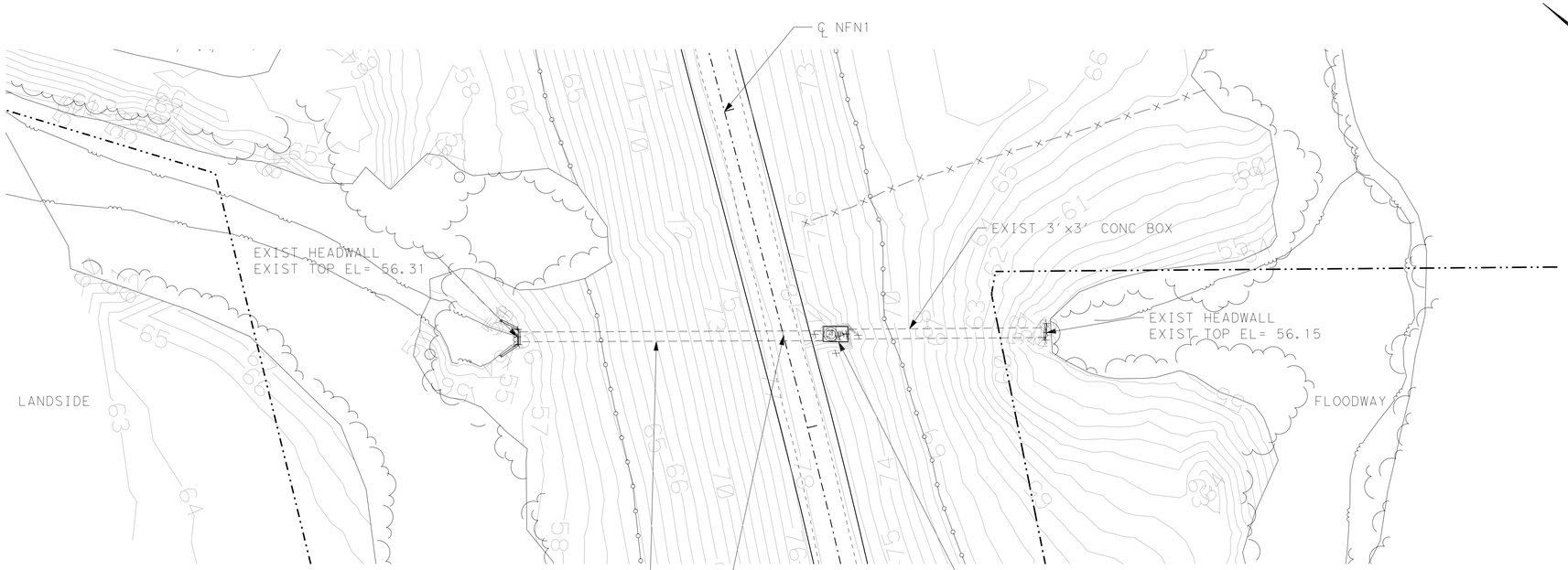

PLAN VIEW LEGEND

- PROP CENTERLINE
- EXIST RIGHT-OF-WAY
- EXIST GEOTECHNICAL BORE
- EXIST FLOODWALL
- EL-OH — EXIST OVERHEAD UTILITY LINE
- EXIST SIGN
- 101 — EXIST CONTOURS
- EXIST LEVEE TOE
- F/O — EXIST FIBER OPTIC LINE
- GAS — EXIST GAS LINE
- W — EXIST WATER LINE
- T — EXIST TELEPHONE LINE
- X — X — EXIST FENCE
- PROP SEDIMENT CONTROL FENCE
- WATER BOUNDARY
- PROP LEVEE MAINTENANCE ROAD

NOTES:

1. CULVERT INFORMATION TAKEN FROM AS BUILT PROVIDED BY IBWC IF AVAILABLE.
2. CULVERTS WERE NOT CHECKED FOR HYDRAULICS ADEQUACY UNDER THIS TASK ORDER.
3. FOR GATEWELL ADJUSTMENT REFER TO SHEETS 12.58 & 12.59.
4. FOR CULVERT EXTENSION REFER TO SHEETS 12.60, & 12.61.
5. FOR CURB EXTENSION REFER TO SHEET 12.57.

STRUCTURE TYPE:
DRAINAGE

SCALE H: 1"=20'
V: 1"=10'

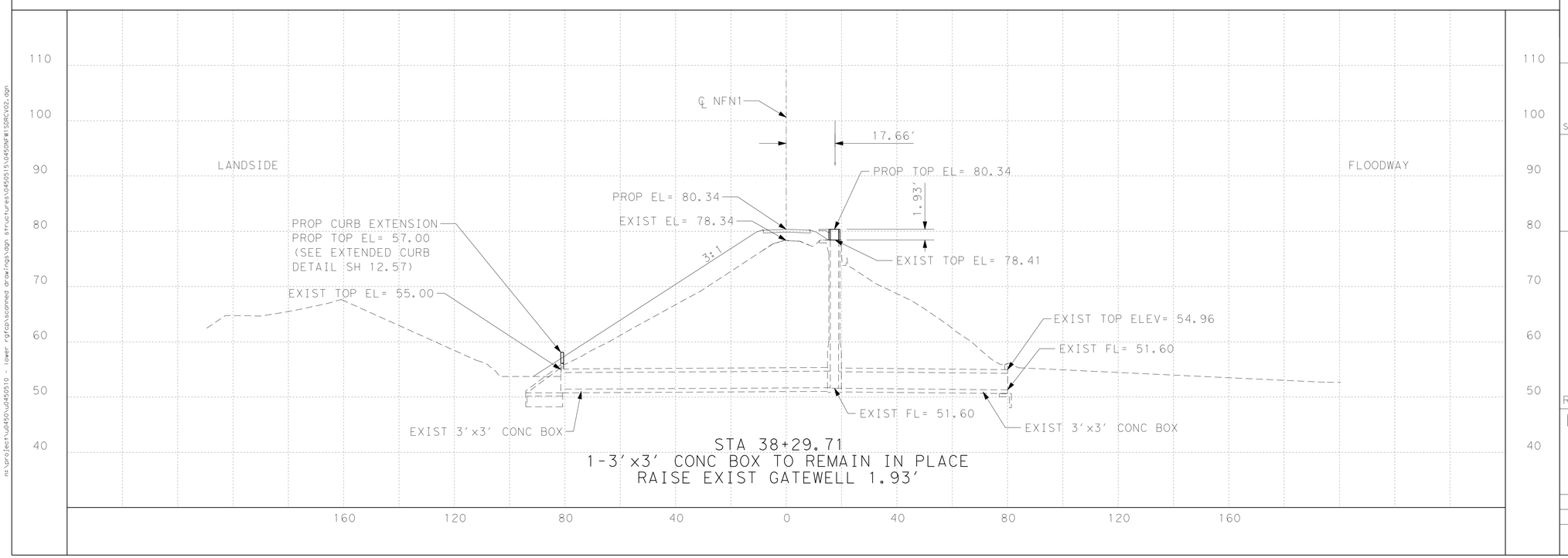

m:\project\0450\0450510 - lower rgfcp\scanned drawings\dgn structures\0450515\0450NFW1SDRCV02.dgn

S&B INFRASTRUCTURE, LTD.
Engineering Management Technology
S&B Infrastructure, Ltd. Firm Registration Number: 1582

DL, INC.
DOS LOGISTICS, INC.
212 W. 3rd Sreet Phone: (956) 968-8800
Weslaco, Tx. 78596 Fax: (956) 447-8194
Dos Logistics, Inc. Firm Registration Number: F-9225

STATE OF TEXAS
JOSE G. REYES JR.
93827
LICENSED PROFESSIONAL ENGINEER
The seal appearing on this document was authorized by JOSE G. REYES JR. P.E. 93827 on JUL. 29, 2009
P.E.

REVISED 07/29/2009

NORTH FLOODWAY NORTH LEVEE (NFN1) STRUCTURE NO. 111 STA 38+29.71

SHEET 2 OF 50

STATE	COUNTY	DRAWN BY:	CHECKED BY:	
TEXAS	HIDALGO	PROJECT NO.	IBM09T0018	SHEET NO.
REHABILITATION OF NORTH FLOODWAY NORTH AND SOUTH LEVEES (FM 1015 TO BASELINE RD)				12.06

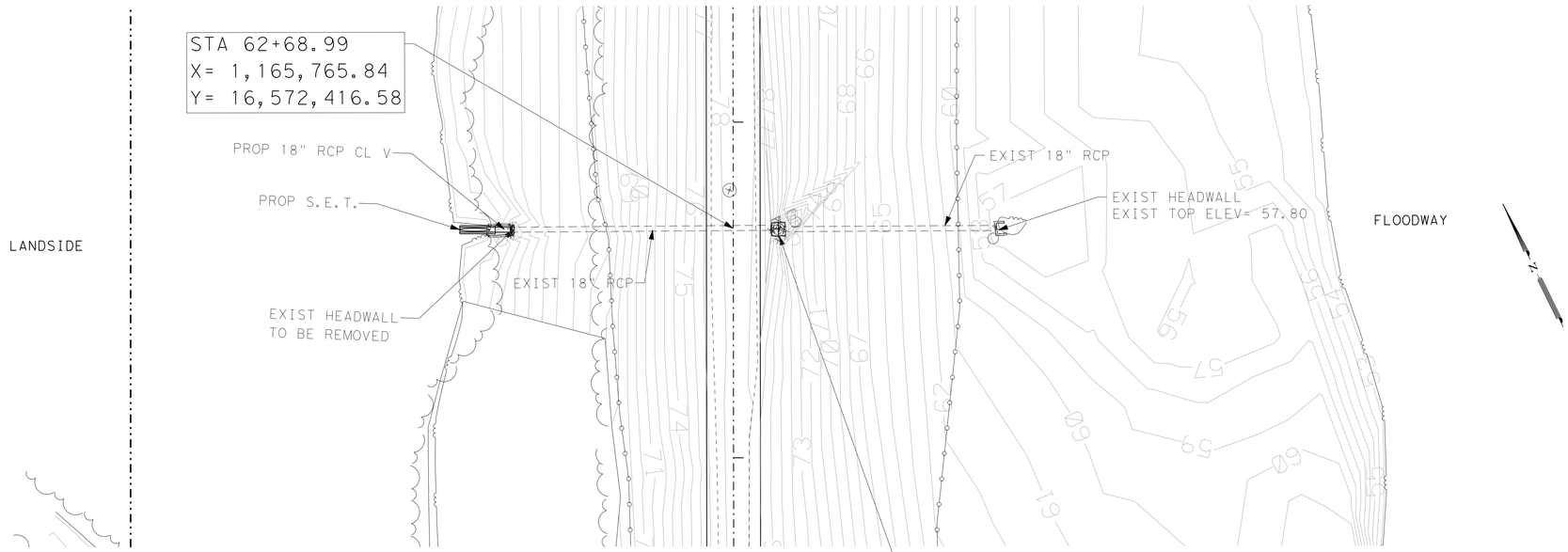

PLAN VIEW LEGEND

- PROP CENTERLINE
- EXIST RIGHT-OF-WAY
- EXIST GEOTECHNICAL BORE
- EXIST FLOODWALL
- EL-OH — EXIST OVERHEAD UTILITY LINE
- EXIST SIGN
- 101 — EXIST CONTOURS
- EXIST LEVEE TOE
- F/O — EXIST FIBER OPTIC LINE
- GAS — EXIST GAS LINE
- W — EXIST WATER LINE
- T — EXIST TELEPHONE LINE
- X — EXIST FENCE
- PROP SEDIMENT CONTROL FENCE
- WATER BOUNDARY
- PROP LEVEE MAINTENANCE ROAD

NOTES:

1. CULVERT INFORMATION TAKEN FROM AS BUILT PROVIDED BY IBWC IF AVAILABLE.
2. CULVERTS WERE NOT CHECKED FOR HYDRAULICS ADEQUACY UNDER THIS TASK ORDER.
3. FOR GATEWELL ADJUSTMENT REFER TO SHEETS 12.58 & 12.59.
4. FOR CULVERT EXTENSION REFER TO SHEETS 12.60, & 12.61.
5. FOR CURB EXTENSION REFER TO SHEET 12.57.

STRUCTURE TYPE:
DRAINAGE

SCALE H: 1"=20'
V: 1"=10'

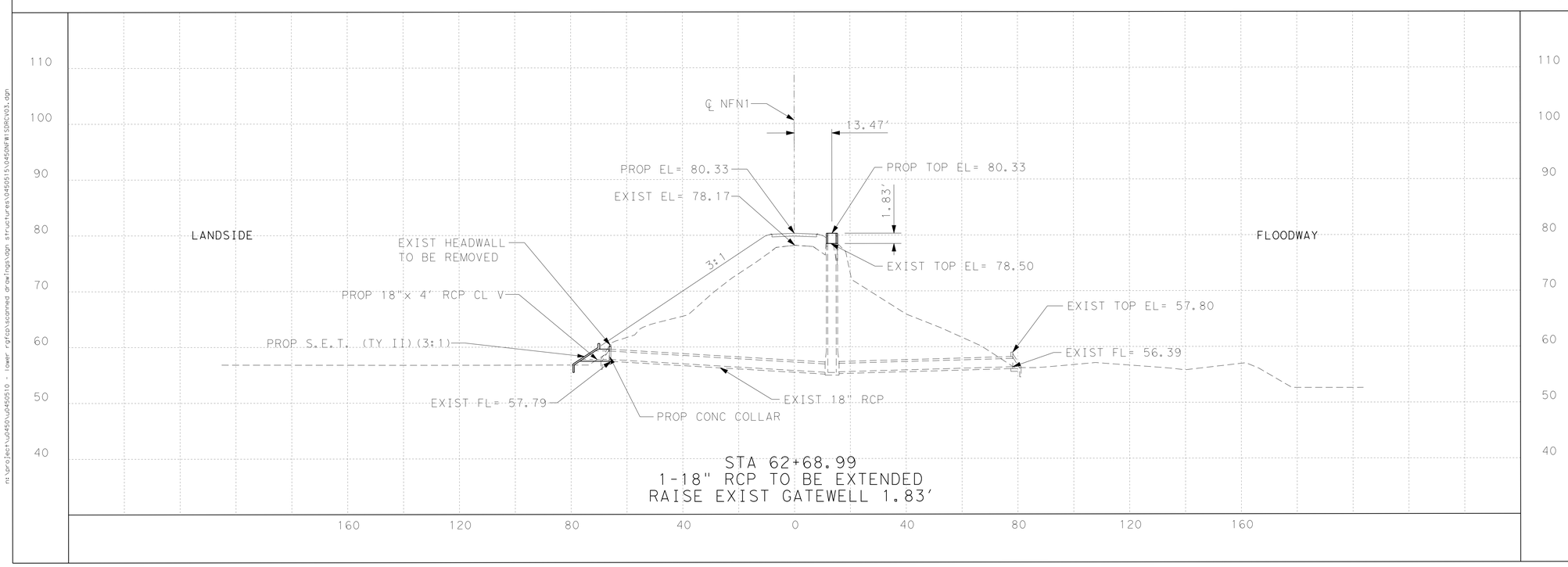

n:\project\u0450\u0450510 - lower rgfcp\scanned drawings\dgn structures\0450515\0450NFN1SDRCV03.dgn

S&B INFRASTRUCTURE, LTD.
Engineering Management Technology
S&B Infrastructure, Ltd. Firm Registration Number: 1582

DL, INC.
DOS LOGISTICS, INC.
212 W. 3rd Sreet
Weslaco, Tx. 78596
Phone: (956) 968-8800
Fax: (956) 447-8194
Dos Logistics, Inc. Firm Registration Number: F-9225

STATE OF TEXAS
JOSE G. REYES JR.
93827
LICENSED
PROFESSIONAL ENGINEER

The seal appearing on this document was authorized by JOSE G. REYES JR. P.E. 93827
JUL 29 20 09
P.E.

REVISED 07/29/2009

NORTH FLOODWAY NORTH LEVEE (NFN1)
STRUCTURE NO. 112
STA 62+68.99

SHEET 3 OF 50

STATE	COUNTY	DRAWN BY:	CHECKED BY:	
TEXAS	HIDALGO	PROJECT NO.	IBM09T0018	SHEET NO.
REHABILITATION OF NORTH FLOODWAY NORTH AND SOUTH LEVEES (FM 1015 TO BASELINE RD)				12.07

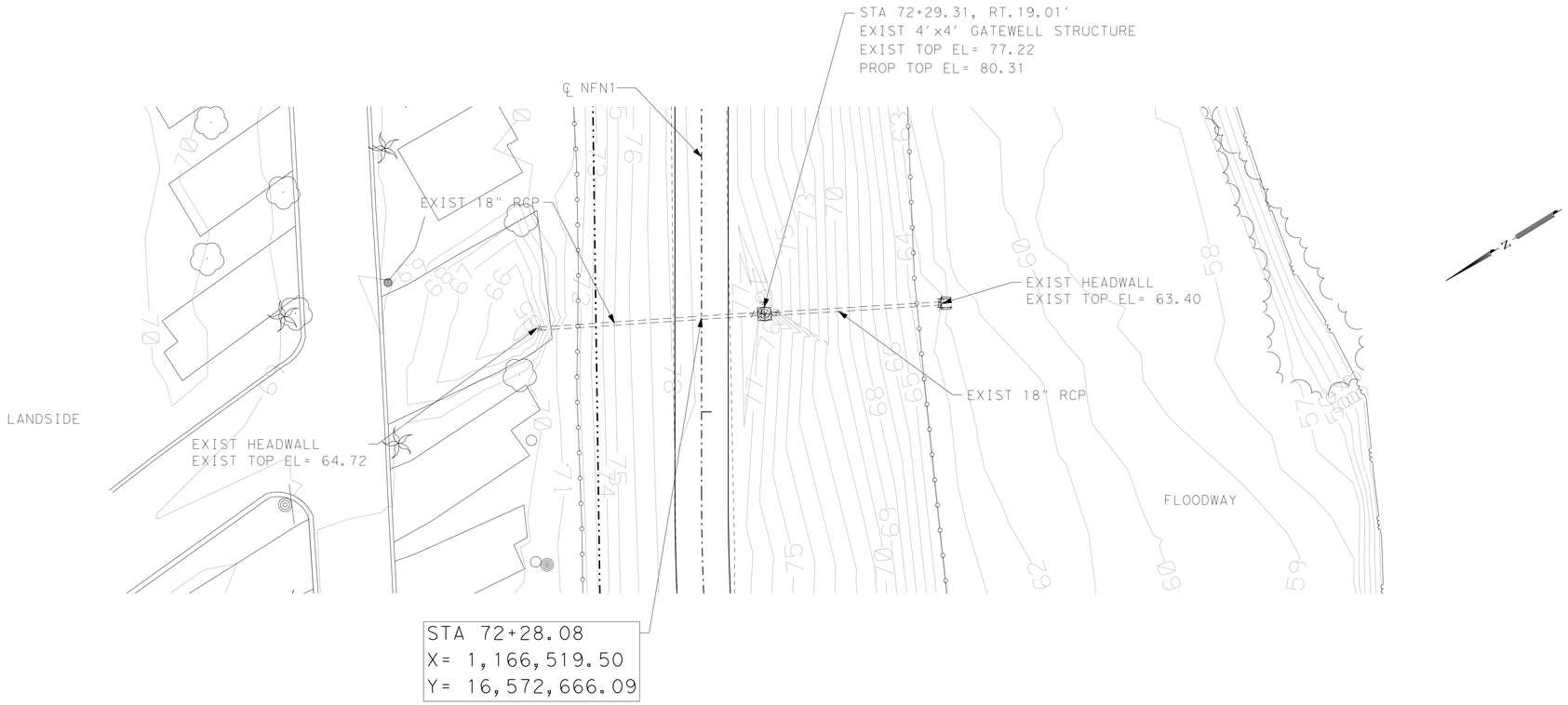

PLAN VIEW LEGEND

- PROP CENTERLINE
- EXIST RIGHT-OF-WAY
- EXIST GEOTECHNICAL BORE
- EXIST FLOODWALL
- EL-OH — EXIST OVERHEAD UTILITY LINE
- EXIST SIGN
- 101 — EXIST CONTOURS
- EXIST LEVEE TOE
- F/O — EXIST FIBER OPTIC LINE
- GAS — EXIST GAS LINE
- W — EXIST WATER LINE
- T — EXIST TELEPHONE LINE
- X — X — EXIST FENCE
- PROP SEDIMENT CONTROL FENCE
- WATER BOUNDARY
- PROP LEVEE MAINTENANCE ROAD

NOTES:

1. CULVERT INFORMATION TAKEN FROM AS BUILT PROVIDED BY IBWC IF AVAILABLE.
2. CULVERTS WERE NOT CHECKED FOR HYDRAULICS ADEQUACY UNDER THIS TASK ORDER.
3. FOR GATEWELL ADJUSTMENT REFER TO SHEETS 12.58 & 12.59.
4. FOR CULVERT EXTENSION REFER TO SHEETS 12.60, & 12.61.
5. FOR CURB EXTENSION REFER TO SHEET 12.57.

STRUCTURE TYPE:
DRAINAGE

SCALE H: 1"=20'
V: 1"=10'

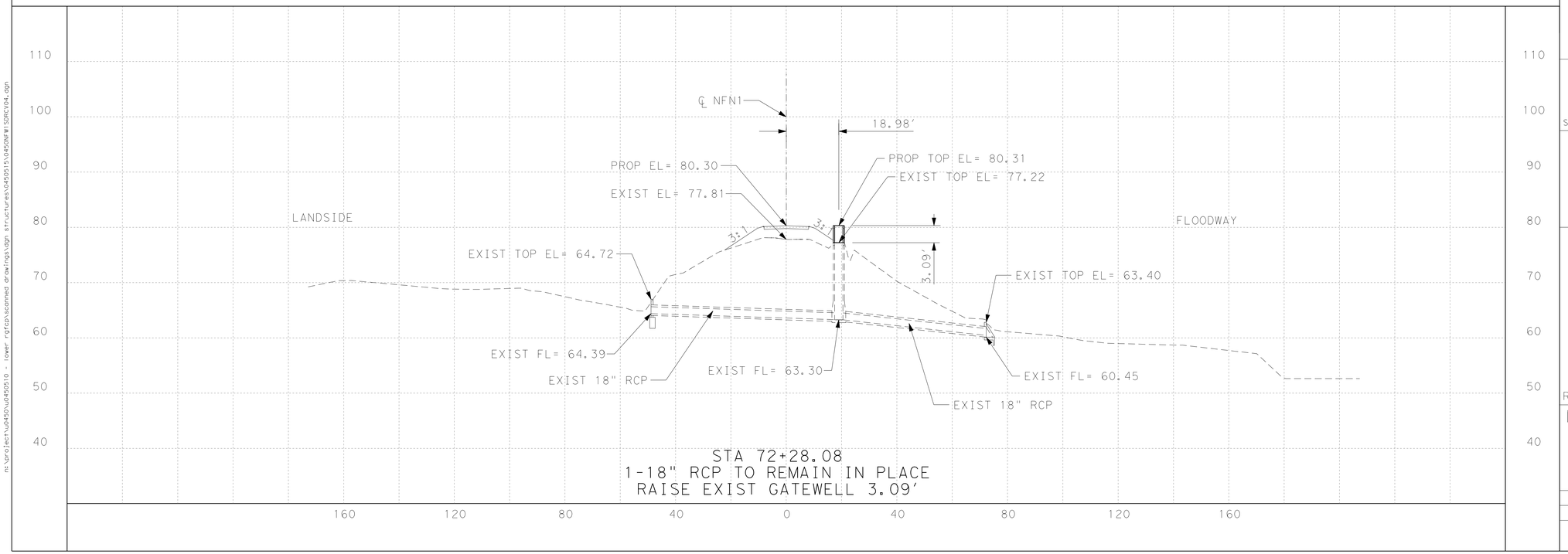

S&B INFRASTRUCTURE, LTD.
Engineering Management Technology
S&B Infrastructure, Ltd. Firm Registration Number: 1582

DL, INC.
DOS LOGISTICS, INC.
212 W. 3rd Sreet
Weslaco, Tx. 78596
Phone: (956) 968-8800
Fax: (956) 447-8194
Dos Logistics, Inc. Firm Registration Number: F-9225

STATE OF TEXAS
JOSE G. REYES JR.
93827
LICENSED
PROFESSIONAL ENGINEER

The seal appearing on this document was authorized by JOSE G. REYES JR. P.E. 93827

JUL 29 20 09

P.E.

REVISED 07/29/2009

NORTH FLOODWAY NORTH LEVEE (NFN1) STRUCTURE NO. 113 STA 72+28.08

SHEET 4 OF 50

STATE	COUNTY	DRAWN BY:	CHECKED BY:	
TEXAS	HIDALGO	PROJECT NO. IBM09T0018		SHEET NO.
REHABILITATION OF NORTH FLOODWAY NORTH AND SOUTH LEVEES (FM 1015 TO BASELINE RD)				12.08

m:\project\u2450\u245010 - lower rgfcp\scanned drawings\dgn structures\045051S\0450NFW1SDRCV04.dgn

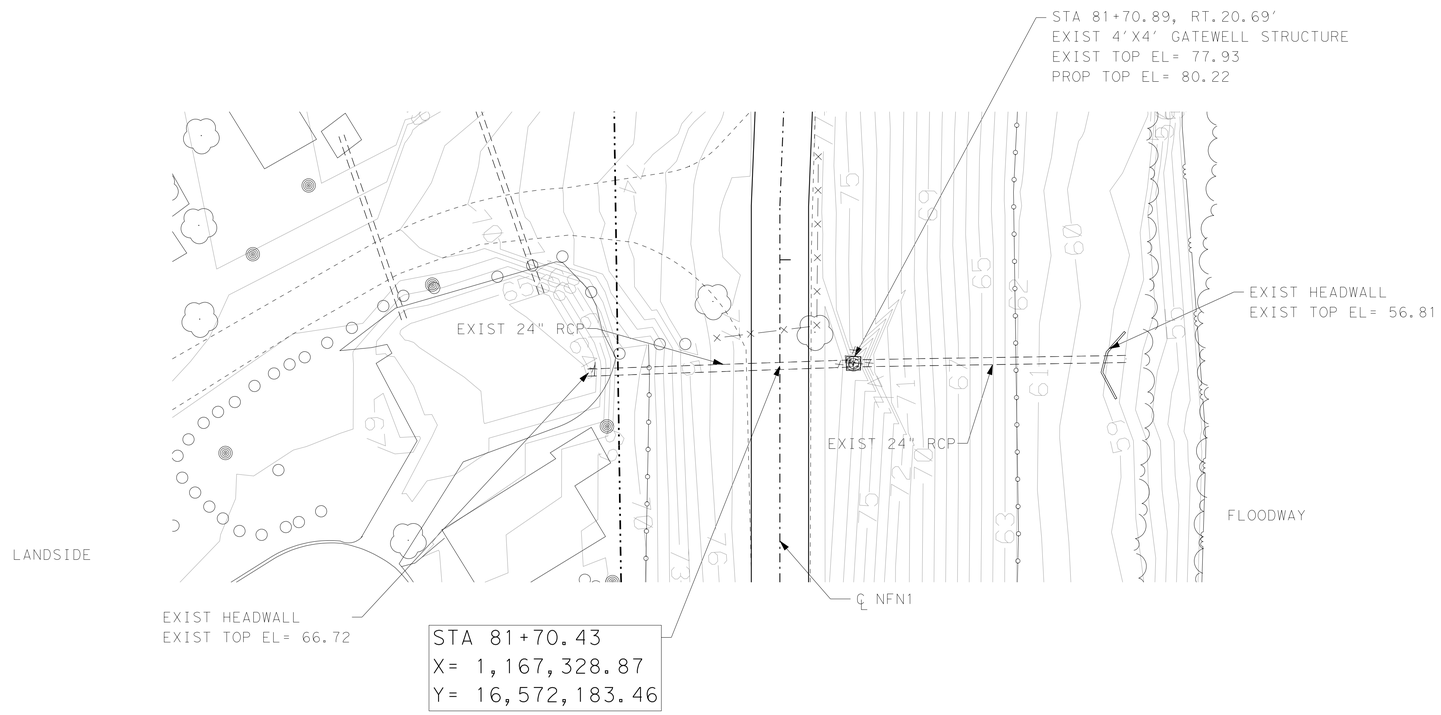

STRUCTURE TYPE:
DRAINAGE

SCALE H: 1"=20'
V: 1"=10'

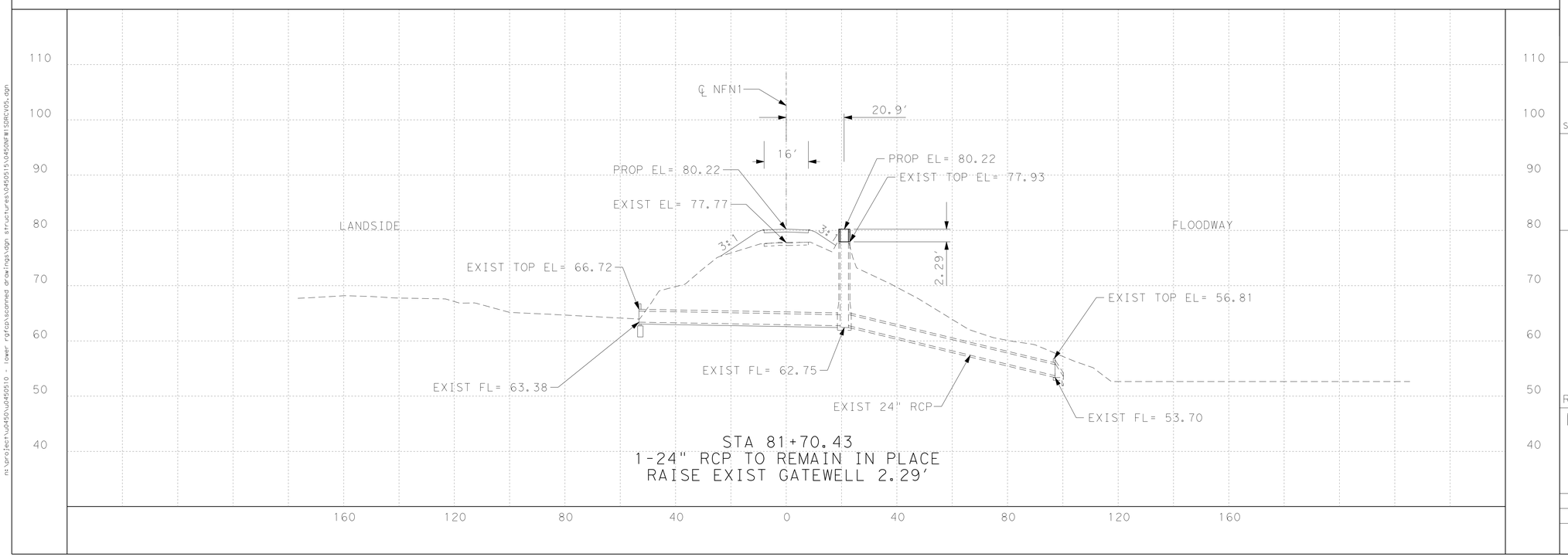

PLAN VIEW LEGEND

- PROP CENTERLINE
- EXIST RIGHT-OF-WAY
- EXIST GEOTECHNICAL BORE
- EXIST FLOODWALL
- EL-OH — EXIST OVERHEAD UTILITY LINE
- EXIST SIGN
- 101 — EXIST CONTOURS
- EXIST LEVEE TOE
- F/O — EXIST FIBER OPTIC LINE
- GAS — EXIST GAS LINE
- W — EXIST WATER LINE
- T — EXIST TELEPHONE LINE
- X — EXIST FENCE
- PROP SEDIMENT CONTROL FENCE
- WATER BOUNDARY
- PROP LEVEE MAINTENANCE ROAD

NOTES:

1. CULVERT INFORMATION TAKEN FROM AS BUILT PROVIDED BY IBWC IF AVAILABLE.
2. CULVERTS WERE NOT CHECKED FOR HYDRAULICS ADEQUACY UNDER THIS TASK ORDER.
3. FOR GATEWELL ADJUSTMENT REFER TO SHEETS 12.58 & 12.59.
4. FOR CULVERT EXTENSION REFER TO SHEETS 12.60, & 12.61.
5. FOR CURB EXTENSION REFER TO SHEET 12.57.

S&B INFRASTRUCTURE, LTD.
Engineering Management Technology
S&B Infrastructure, Ltd. Firm Registration Number: 1582

DL, INC.
DOS LOGISTICS, INC.
212 W. 3rd Sreet Weslaco, Tx. 78596
Phone: (956) 968-8800 Fax: (956) 447-8194
Dos Logistics, Inc. Firm Registration Number: F-9225

STATE OF TEXAS
JOSE G. REYES JR.
93827
LICENSED PROFESSIONAL ENGINEER
The seal appearing on this document was authorized by JOSE G. REYES JR. P.E. 93827 on JUL. 29 20 09
P.E.

REVISED 07/29/2009

NORTH FLOODWAY NORTH LEVEE (NFN1) STRUCTURE NO. 114 STA 81+70.43

SHEET 5 OF 50

STATE	COUNTY	DRAWN BY:	CHECKED BY:	
TEXAS	HIDALGO	PROJECT NO. IBM09T0018		SHEET NO.
REHABILITATION OF NORTH FLOODWAY NORTH AND SOUTH LEVEES (FM 1015 TO BASELINE RD)				12.09

n:\project\u0450\u0450510 - lower rgfcp\scanned drawings\dgn structures\0450515\0450NFW15DRC\05.dgn

STRUCTURE TYPE:
DRAINAGE

SCALE H: 1"=20'
V: 1"=10'

PLAN VIEW LEGEND

- PROP CENTERLINE
- EXIST RIGHT-OF-WAY
- EXIST GEOTECHNICAL BORE
- EXIST FLOODWALL
- EL-OH — EXIST OVERHEAD UTILITY LINE
- EXIST SIGN
- 101 — EXIST CONTOURS
- EXIST LEVEE TOE
- F/O — EXIST FIBER OPTIC LINE
- GAS — EXIST GAS LINE
- W — EXIST WATER LINE
- T — EXIST TELEPHONE LINE
- X — EXIST FENCE
- PROP SEDIMENT CONTROL FENCE
- WATER BOUNDARY
- PROP LEVEE MAINTENANCE ROAD

NOTES:

1. CULVERT INFORMATION TAKEN FROM AS BUILT PROVIDED BY IBWC IF AVAILABLE.
2. CULVERTS WERE NOT CHECKED FOR HYDRAULICS ADEQUACY UNDER THIS TASK ORDER.
3. FOR GATEWELL ADJUSTMENT REFER TO SHEETS 12.58 & 12.59.
4. FOR CULVERT EXTENSION REFER TO SHEETS 12.60, & 12.61.
5. FOR CURB EXTENSION REFER TO SHEET 12.57.

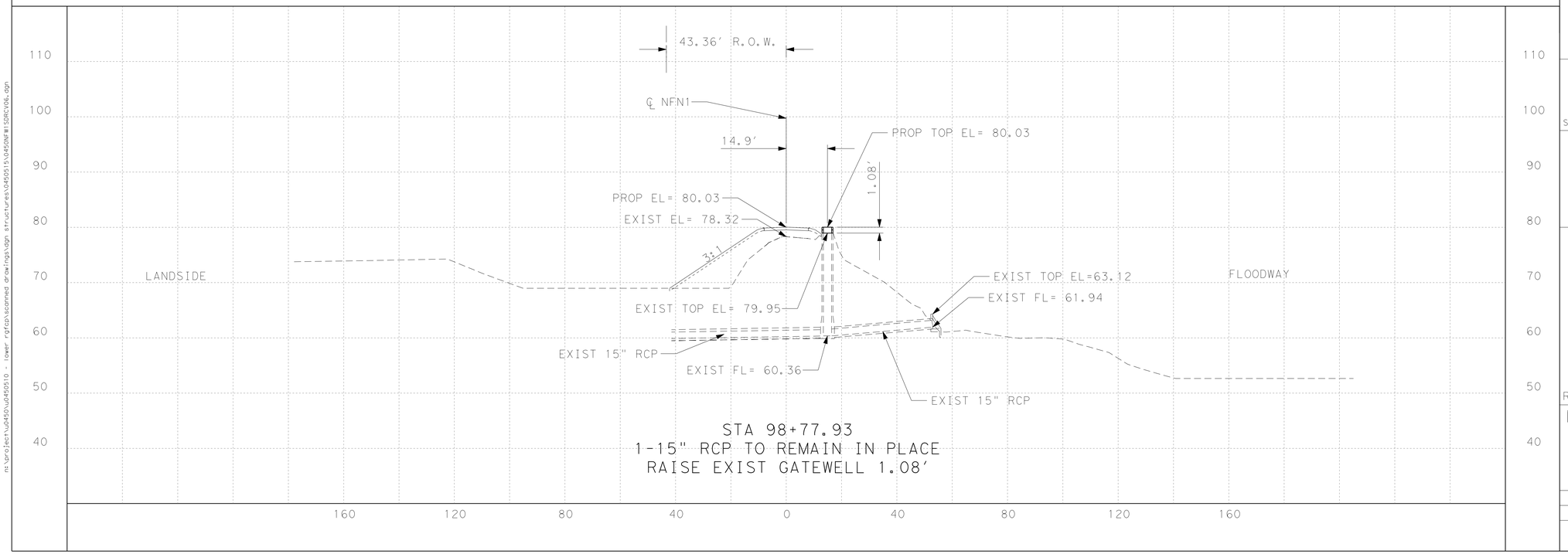

STA 98+77.93
1-15" RCP TO REMAIN IN PLACE
RAISE EXIST GATEWELL 1.08'

S&B INFRASTRUCTURE, LTD.
Engineering Management Technology
S&B Infrastructure, Ltd. Firm Registration Number: 1582

DL, INC.
DOS LOGISTICS, INC.
212 W. 3rd Sreet Phone: (956) 968-8800
Weslaco, Tx. 78596 Fax: (956) 447-8194
Dos Logistics, Inc. Firm Registration Number: F-9225

STATE OF TEXAS
JOSE G. REYES JR.
93827
LICENSED
PROFESSIONAL ENGINEER

The seal appearing on this document was authorized by JOSE G. REYES JR. P.E. 93827 on JUL 29 20 09

REVISED 07/29/2009

NORTH FLOODWAY NORTH LEVEE
(NFN1)
STRUCTURE NO. 116
STA 98+77.93

SHEET 6 OF 50

STATE	COUNTY	DRAWN BY:	CHECKED BY:	
TEXAS	HIDALGO	PROJECT NO.	IBM09T0018	SHEET NO.
REHABILITATION OF NORTH FLOODWAY NORTH AND SOUTH LEVEES (FM 1015 TO BASELINE RD)				12.10

n:\project\u2450\u2450510 - lower rgfcp\scanned drawings\dgn structures\0450515\0450NFWISDRCV06.dgn

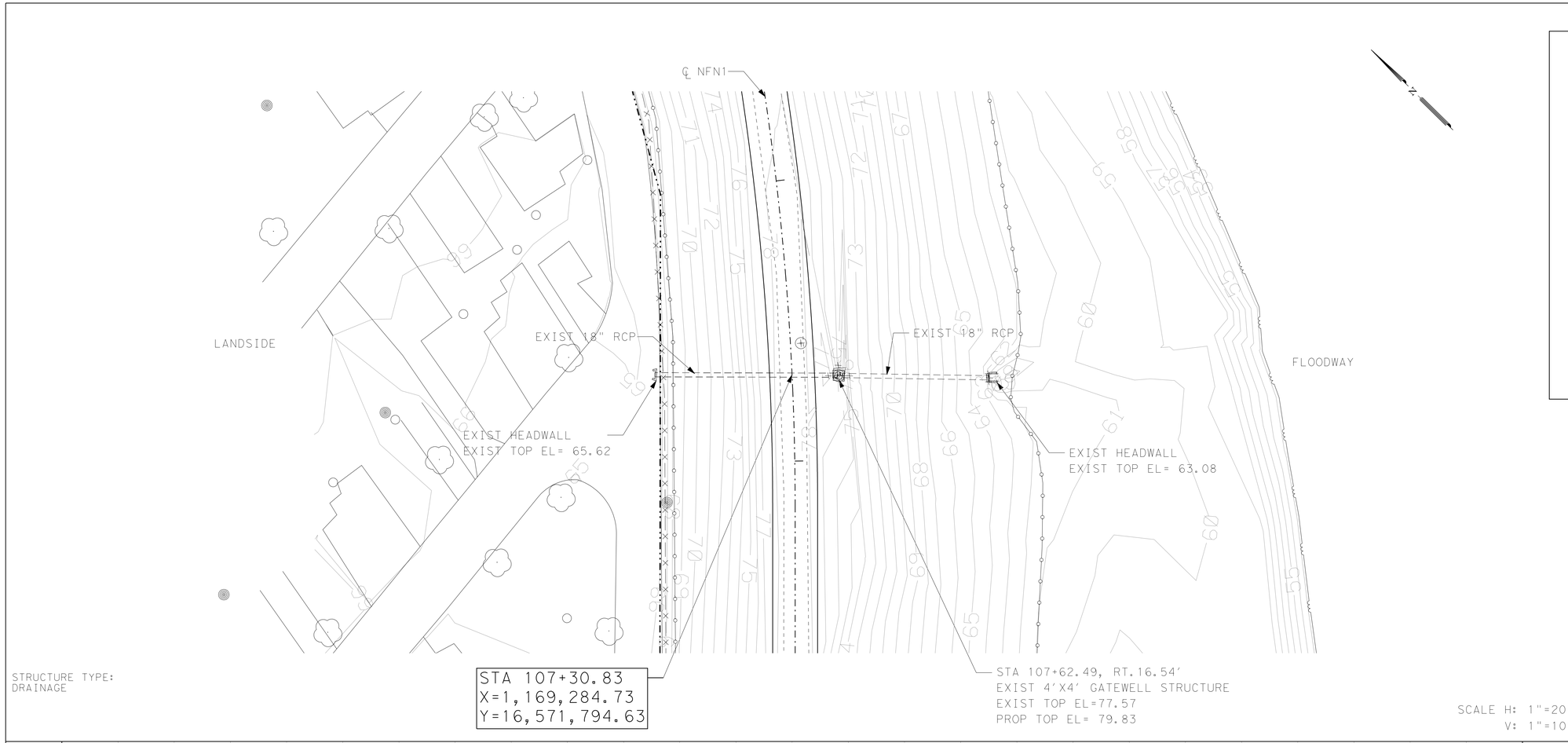

STRUCTURE TYPE:
DRAINAGE

SCALE H: 1"=20'
V: 1"=10'

PLAN VIEW LEGEND

- PROP CENTERLINE
- EXIST RIGHT-OF-WAY
- EXIST GEOTECHNICAL BORE
- EXIST FLOODWALL
- EL-OH — EXIST OVERHEAD UTILITY LINE
- EXIST SIGN
- 101 — EXIST CONTOURS
- EXIST LEVEE TOE
- F/O — EXIST FIBER OPTIC LINE
- GAS — EXIST GAS LINE
- W — EXIST WATER LINE
- T — EXIST TELEPHONE LINE
- X — EXIST FENCE
- PROP SEDIMENT CONTROL FENCE
- WATER BOUNDARY
- PROP LEVEE MAINTENANCE ROAD

NOTES:

1. CULVERT INFORMATION TAKEN FROM AS BUILT PROVIDED BY IBWC IF AVAILABLE.
2. CULVERTS WERE NOT CHECKED FOR HYDRAULICS ADEQUACY UNDER THIS TASK ORDER.
3. FOR GATEWELL ADJUSTMENT REFER TO SHEETS 12.58 & 12.59.
4. FOR CULVERT EXTENSION REFER TO SHEETS 12.60, & 12.61.
5. FOR CURB EXTENSION REFER TO SHEET 12.57.

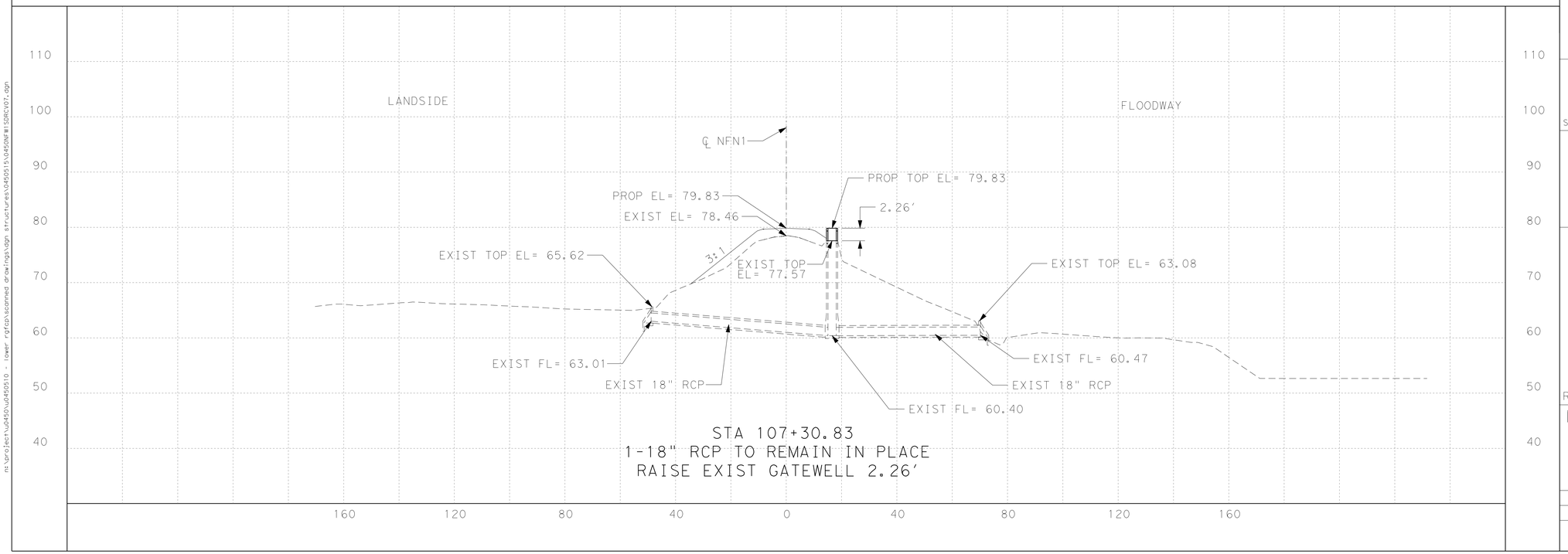

S&B INFRASTRUCTURE, LTD.
Engineering Management Technology
S&B Infrastructure, Ltd. Firm Registration Number: 1582

DL, INC.
DOS LOGISTICS, INC.
212 W. 3rd Sreet Phone: (956) 968-8800
Weslaco, Tx. 78596 Fax: (956) 447-8194
Dos Logistics, Inc. Firm Registration Number: F-9225

STATE OF TEXAS
JOSE G. REYES JR.
93827
LICENSED
PROFESSIONAL ENGINEER

The seal appearing on this document was authorized by JOSE G. REYES JR. P.E. 93827 on JUL 29 2009

REVISED 07/29/2009

NORTH FLOODWAY NORTH LEVEE (NFN1)
STRUCTURE NO. 117
STA 107+30.83

SHEET 7 OF 50

STATE	COUNTY	DRAWN BY:	CHECKED BY:	
TEXAS	HIDALGO	PROJECT NO.	IBM09T0018	SHEET NO.
REHABILITATION OF NORTH FLOODWAY NORTH AND SOUTH LEVEES (FM 1015 TO BASELINE RD)				12.11

n:\project\u0450\u0450510 - lower rgfcp\scanned drawings\dgn structures\0450515\0450NFW1SDRCV07.dgn

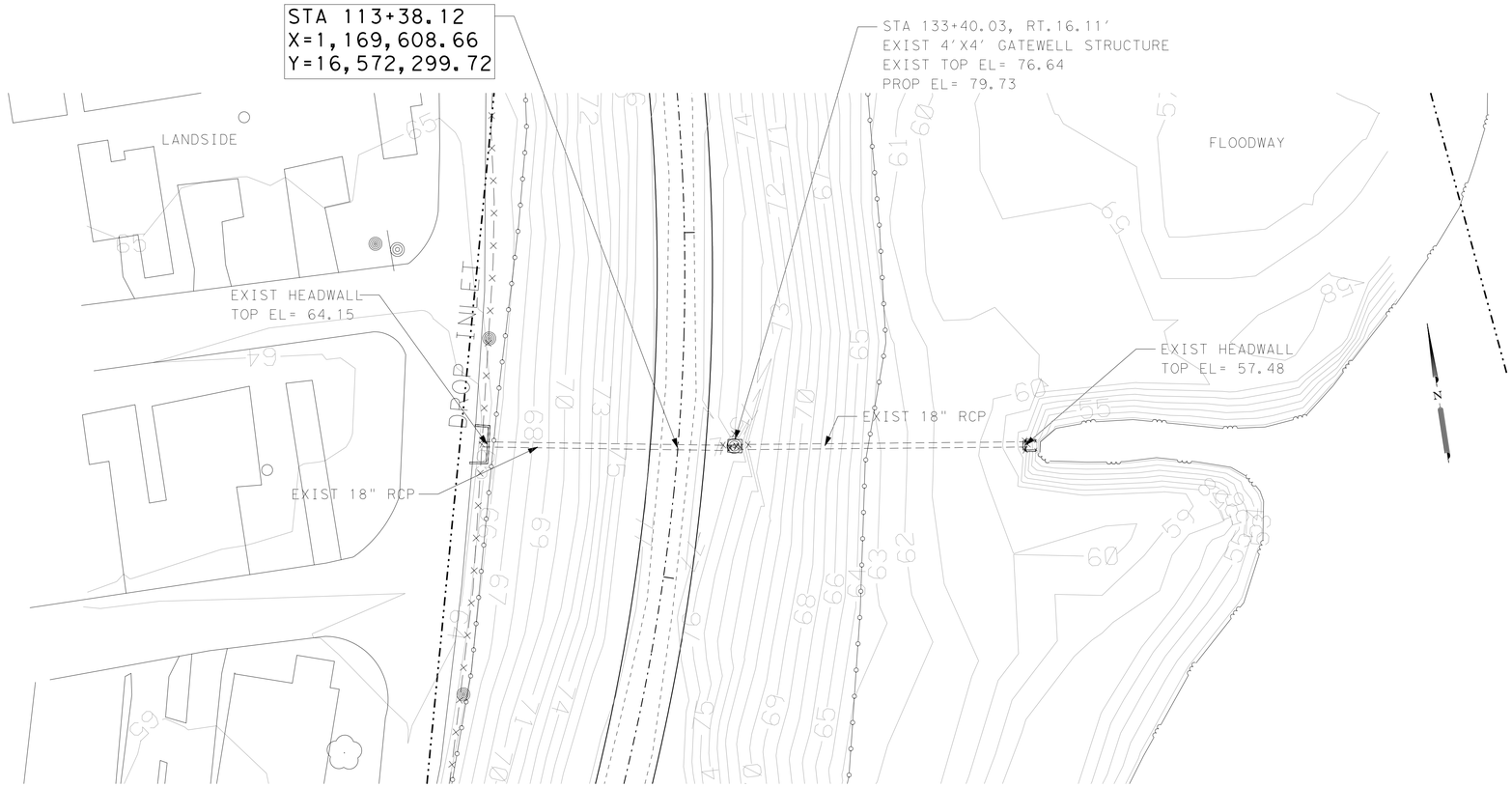

PLAN VIEW LEGEND

- PROP CENTERLINE
- EXIST RIGHT-OF-WAY
- EXIST GEOTECHNICAL BORE
- EXIST FLOODWALL
- EL-OH — EXIST OVERHEAD UTILITY LINE
- EXIST SIGN
- 101 — EXIST CONTOURS
- EXIST LEVEE TOE
- F/O — EXIST FIBER OPTIC LINE
- GAS — EXIST GAS LINE
- W — EXIST WATER LINE
- T — EXIST TELEPHONE LINE
- X — EXIST FENCE
- PROP SEDIMENT CONTROL FENCE
- WATER BOUNDARY
- PROP LEVEE MAINTENANCE ROAD

NOTES:

1. CULVERT INFORMATION TAKEN FROM AS BUILT PROVIDED BY IBWC IF AVAILABLE.
2. CULVERTS WERE NOT CHECKED FOR HYDRAULICS ADEQUACY UNDER THIS TASK ORDER.
3. FOR GATEWELL ADJUSTMENT REFER TO SHEETS 12.58 & 12.59.
4. FOR CULVERT EXTENSION REFER TO SHEETS 12.60, & 12.61.
5. FOR CURB EXTENSION REFER TO SHEET 12.57.

STRUCTURE TYPE:
DRAINAGE

SCALE H: 1"=20'
V: 1"=10'

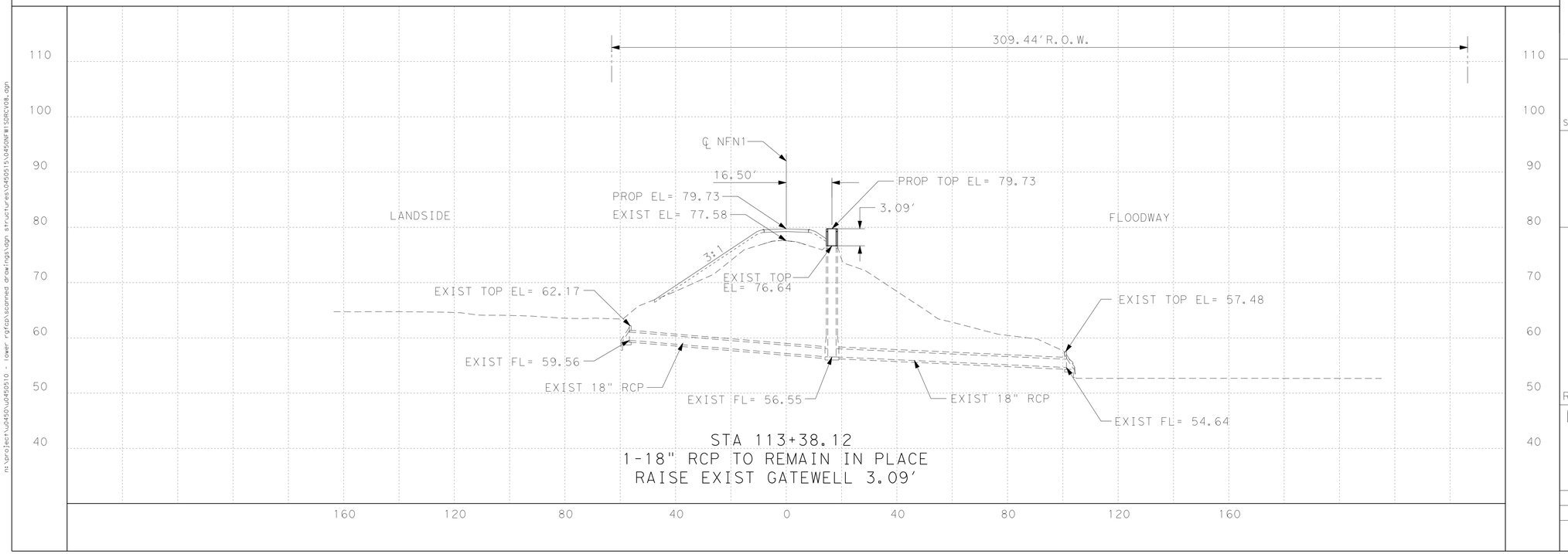

STA 113+38.12
1-18" RCP TO REMAIN IN PLACE
RAISE EXIST GATEWELL 3.09'

n:\project\u0450\u0450510 - lower rgfcp\scanned drawings\dgn structures\0450515\0450NFW1SDRCV08.dgn

INTERNATIONAL BOUNDARY AND WATER COMMISSION
COMISION INTERNACIONAL DE LIMITES Y AGUAS

S&B INFRASTRUCTURE, LTD.
Engineering Management Technology
S&B Infrastructure, Ltd. Firm Registration Number: 1582

DL, INC.
DOS LOGISTICS, INC.
212 W. 3rd Sreet
Weslaco, Tx. 78596
Phone: (956) 968-8800
Fax: (956) 447-8194
Dos Logistics, Inc. Firm Registration Number: F-9225

STATE OF TEXAS
JOSE G. REYES JR.
93827
LICENSED
PROFESSIONAL ENGINEER

The seal appearing on this document was authorized by JOSE G. REYES JR. P.E. 93827 on JUL. 29, 2009

REVISED 07/29/2009

NORTH FLOODWAY NORTH LEVEE (NFN1)
STRUCTURE NO. 118
STA 113+38.12

SHEET 8 OF 50

STATE	COUNTY	DRAWN BY:	CHECKED BY:	
TEXAS	HIDALGO	PROJECT NO.	IBM09T0018	SHEET NO.

REHABILITATION OF NORTH FLOODWAY
NORTH AND SOUTH LEVEES
(FM 1015 TO BASELINE RD)

12.12

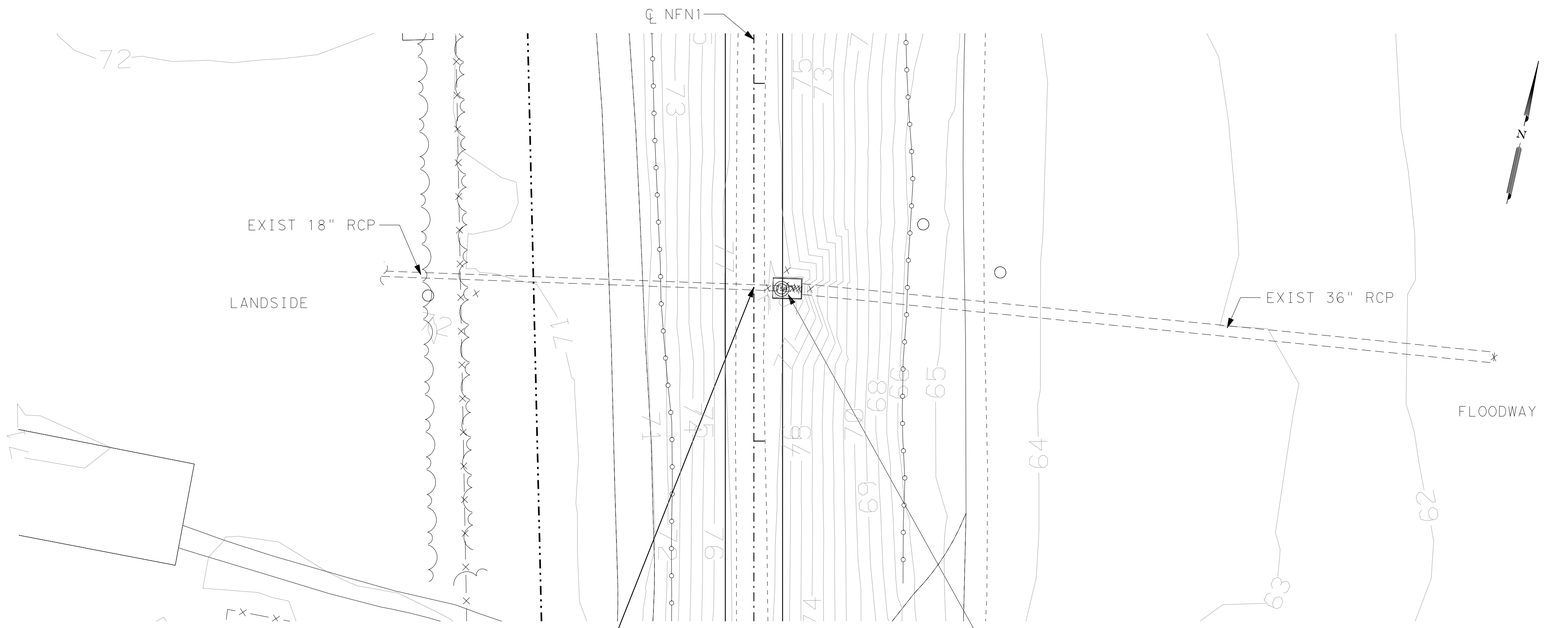

STRUCTURE TYPE:
DRAINAGE

OWNER:
LLANO GRANDE RV PARK

LICENSE No.:
LSF/G-904

SCALE H: 1"=20'
V: 1"=10'

PLAN VIEW LEGEND

- PROP CENTERLINE
- EXIST RIGHT-OF-WAY
- EXIST GEOTECHNICAL BORE
- EXIST FLOODWALL
- EL-OH — EXIST OVERHEAD UTILITY LINE
- EXIST SIGN
- 101 — EXIST CONTOURS
- EXIST LEVEE TOE
- F/O — EXIST FIBER OPTIC LINE
- GAS — EXIST GAS LINE
- W — EXIST WATER LINE
- T — EXIST TELEPHONE LINE
- X — EXIST FENCE
- PROP SEDIMENT CONTROL FENCE
- WATER BOUNDARY
- PROP LEVEE MAINTENANCE ROAD

NOTES:

1. CULVERT INFORMATION TAKEN FROM AS BUILT PROVIDED BY IBWC IF AVAILABLE.
2. CULVERTS WERE NOT CHECKED FOR HYDRAULICS ADEQUACY UNDER THIS TASK ORDER.
3. FOR GATEWELL ADJUSTMENT REFER TO SHEETS 12.58 & 12.59.
4. FOR CULVERT EXTENSION REFER TO SHEETS 12.60, & 12.61.
5. FOR CURB EXTENSION REFER TO SHEET 12.57.

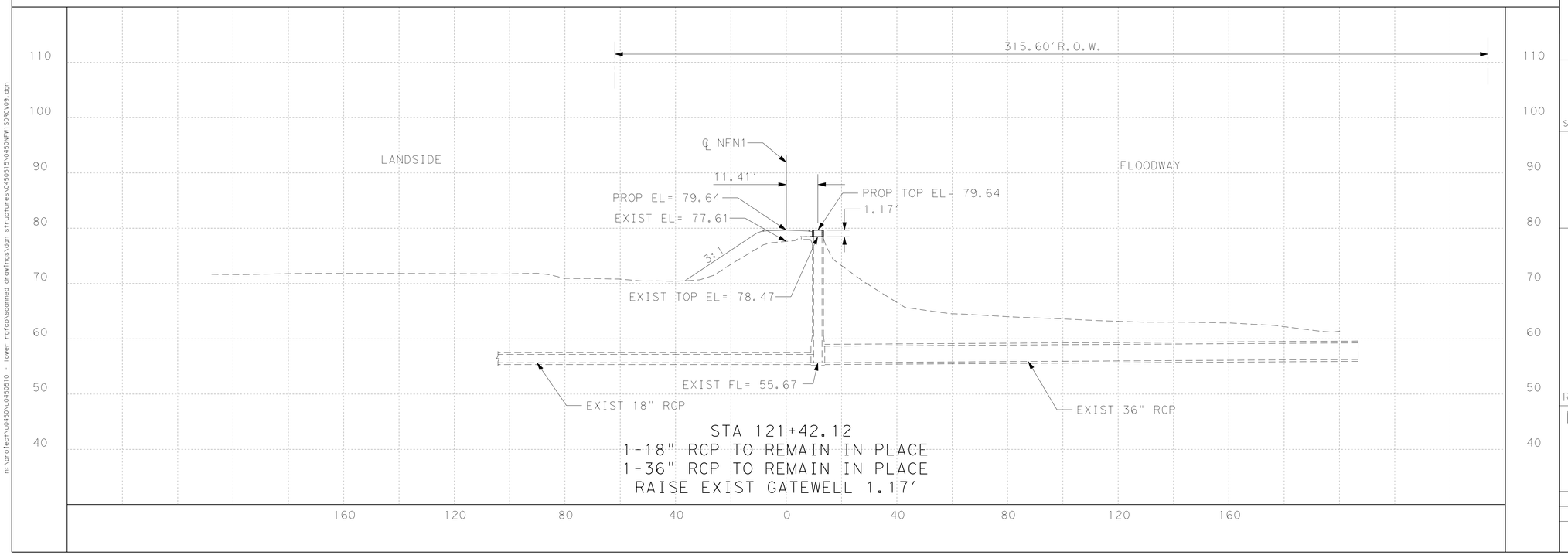

S&B INFRASTRUCTURE, LTD.
Engineering Management Technology
S&B Infrastructure, Ltd. Firm Registration Number: 1582

DL, INC.
DOS LOGISTICS, INC.
212 W. 3rd Sreet Phone: (956) 968-8800
Weslaco, Tx. 78596 Fax: (956) 447-8194
Dos Logistics, Inc. Firm Registration Number: F-9225

STATE OF TEXAS
JOSE G. REYES JR.
93827
LICENSED PROFESSIONAL ENGINEER

The seal appearing on this document was authorized by JOSE G. REYES JR. P.E. 93827 on JUL 29 2009

REVISED 07/29/2009

NORTH FLOODWAY NORTH LEVEE (NFN1)
STRUCTURE NO. 118L
STA 121+42.12

SHEET 9 OF 50

STATE	COUNTY	DRAWN BY:	CHECKED BY:	
TEXAS	HIDALGO	PROJECT NO.	IBM09T0018	SHEET NO.
REHABILITATION OF NORTH FLOODWAY NORTH AND SOUTH LEVEES (FM 1015 TO BASELINE RD)				12.13

n:\project\u0450\u0450510 - lower rgfcp\scanned drawings\dgn structures\0450515\0450NFW1SDRCV09.dgn

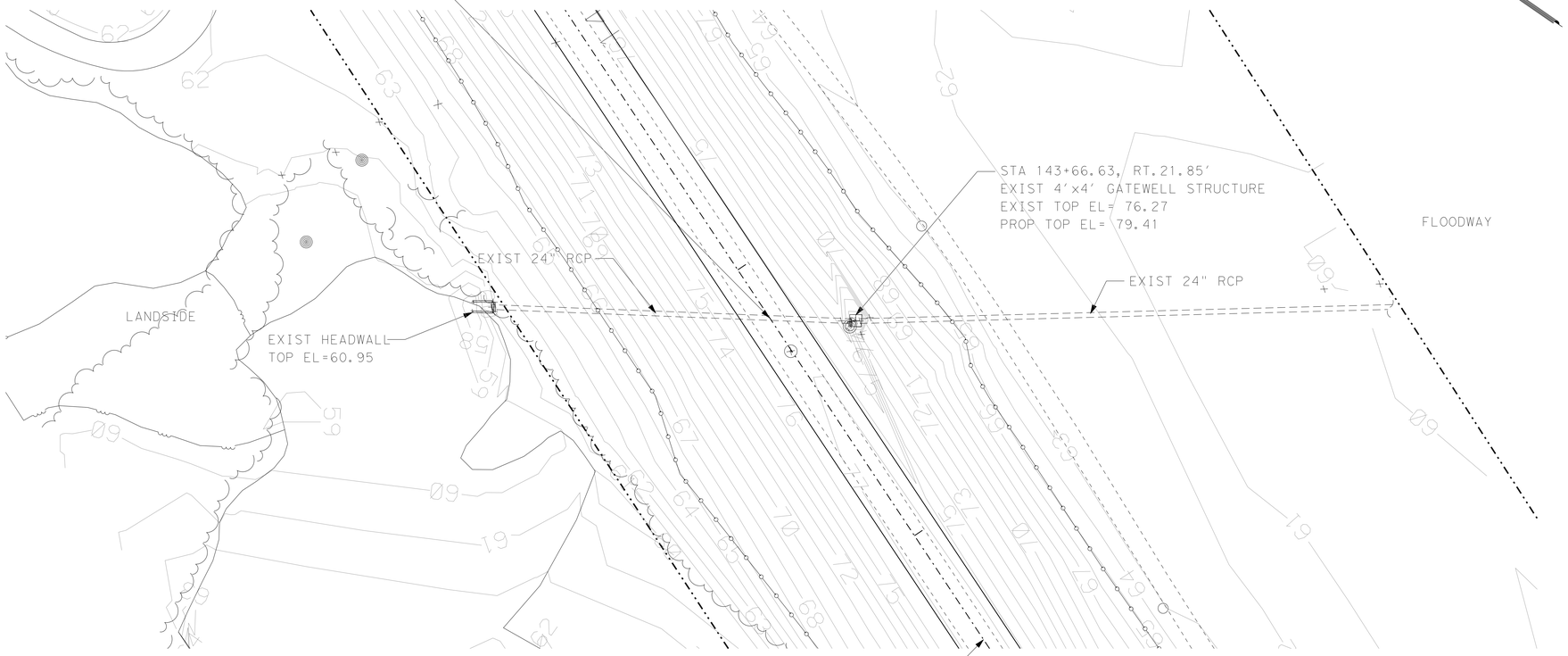

STRUCTURE TYPE:
IRRIGATION

SCALE H: 1"=20'
V: 1"=10'

PLAN VIEW LEGEND

- PROP CENTERLINE
- EXIST RIGHT-OF-WAY
- EXIST GEOTECHNICAL BORE
- EXIST FLOODWALL
- EL-OH — EXIST OVERHEAD UTILITY LINE
- EXIST SIGN
- 101 — EXIST CONTOURS
- EXIST LEVEE TOE
- F/O — EXIST FIBER OPTIC LINE
- GAS — EXIST GAS LINE
- W — EXIST WATER LINE
- T — EXIST TELEPHONE LINE
- X — EXIST FENCE
- PROP SEDIMENT CONTROL FENCE
- WATER BOUNDARY
- PROP LEVEE MAINTENANCE ROAD

NOTES:

1. CULVERT INFORMATION TAKEN FROM AS BUILT PROVIDED BY IBWC IF AVAILABLE.
2. CULVERTS WERE NOT CHECKED FOR HYDRAULICS ADEQUACY UNDER THIS TASK ORDER.
3. FOR GATEWELL ADJUSTMENT REFER TO SHEETS 12.58 & 12.59.
4. FOR CULVERT EXTENSION REFER TO SHEETS 12.60, & 12.61.
5. FOR CURB EXTENSION REFER TO SHEET 12.57.

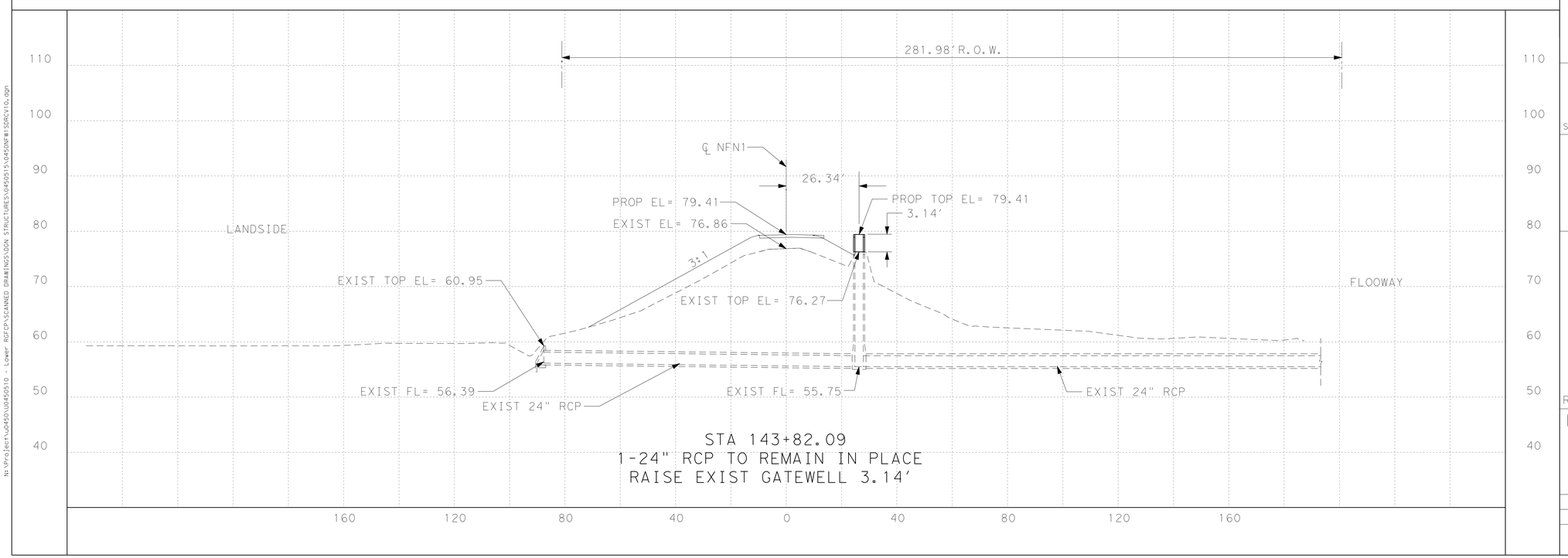

STA 143+82.09
1-24" RCP TO REMAIN IN PLACE
RAISE EXIST GATEWELL 3.14'

S&B INFRASTRUCTURE, LTD.
Engineering Management Technology
S&B Infrastructure, Ltd. Firm Registration Number: 1582

DL, INC.
DOS LOGISTICS, INC.
212 W. 3rd Sreet
Weslaco, Tx. 78596
Phone: (956) 968-8800
Fax: (956) 447-8194
Dos Logistics, Inc. Firm Registration Number: F-9225

STATE OF TEXAS
JOSE G. REYES JR.
93827
LICENSED PROFESSIONAL ENGINEER

The seal appearing on this document was authorized by JOSE G. REYES JR. P.E. 93827 on JUL 29 2009

REVISED 07/29/2009

NORTH FLOODWAY NORTH LEVEE (NFN1)
STRUCTURE NO. 119
STA 143+82.09

SHEET 10 OF 50

STATE	COUNTY	DRAWN BY:	CHECKED BY:	
TEXAS	HIDALGO	PROJECT NO.	IBM09T0018	SHEET NO.
REHABILITATION OF NORTH FLOODWAY NORTH AND SOUTH LEVEES (FM 1015 TO BASELINE RD)				12.14

N:\Project\0450\0450510 - Lower RGFCP\SCANNED DRAWINGS\DGN STRUCTURES\0450515\0450NFW1SDRCV10.dgn

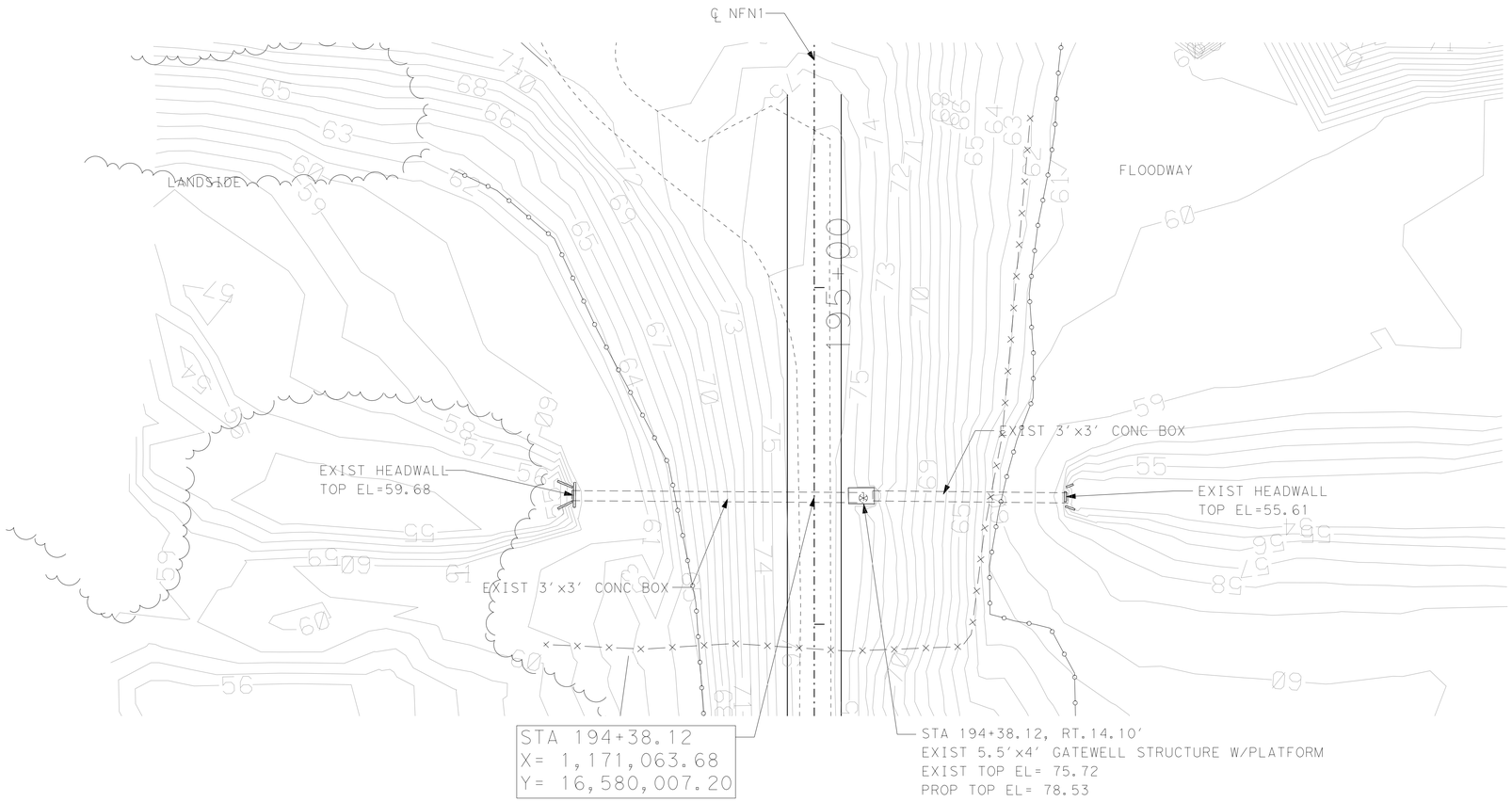

STRUCTURE TYPE:
DRAINAGE

SCALE H: 1"=20'
V: 1"=10'

PLAN VIEW LEGEND

- PROP CENTERLINE
- EXIST RIGHT-OF-WAY
- EXIST GEOTECHNICAL BORE
- EXIST FLOODWALL
- EL-OH — EXIST OVERHEAD UTILITY LINE
- EXIST SIGN
- 101 — EXIST CONTOURS
- EXIST LEVEE TOE
- F/O — EXIST FIBER OPTIC LINE
- GAS — EXIST GAS LINE
- W — EXIST WATER LINE
- T — EXIST TELEPHONE LINE
- X — EXIST FENCE
- PROP SEDIMENT CONTROL FENCE
- WATER BOUNDARY
- PROP LEVEE MAINTENANCE ROAD

NOTES:

1. CULVERT INFORMATION TAKEN FROM AS BUILT PROVIDED BY IBWC IF AVAILABLE.
2. CULVERTS WERE NOT CHECKED FOR HYDRAULICS ADEQUACY UNDER THIS TASK ORDER.
3. FOR GATEWELL ADJUSTMENT REFER TO SHEETS 12.58 & 12.59.
4. FOR CULVERT EXTENSION REFER TO SHEETS 12.60, & 12.61.
5. FOR CURB EXTENSION REFER TO SHEET 12.57.

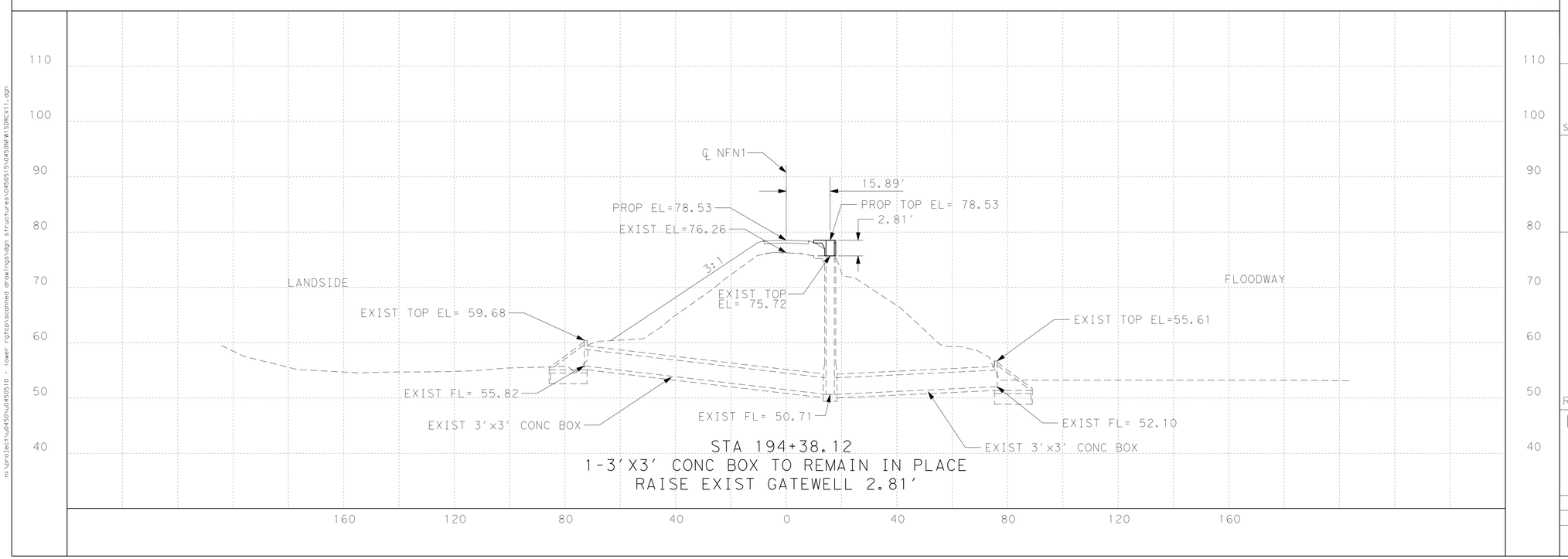

S&B INFRASTRUCTURE, LTD.
Engineering Management Technology
S&B Infrastructure, Ltd. Firm Registration Number: 1582

DL, INC.
DOS LOGISTICS, INC.
212 W. 3rd Sreet
Weslaco, Tx. 78596
Phone: (956) 968-8800
Fax: (956) 447-8194
Dos Logistics, Inc. Firm Registration Number: F-9225

STATE OF TEXAS
JOSE G. REYES JR.
93827
LICENSED
PROFESSIONAL ENGINEER

The seal appearing on this document was authorized by JOSE G. REYES JR. P.E. 93827 on JUL 29 20 09

REVISED 07/29/2009

NORTH FLOODWAY NORTH LEVEE (NFN1) STRUCTURE NO. 120 STA 194+38.12

SHEET 11 OF 50

STATE	COUNTY	DRAWN BY:	CHECKED BY:	
TEXAS	HIDALGO	PROJECT NO.	IBM09T0018	SHEET NO.
REHABILITATION OF NORTH FLOODWAY NORTH AND SOUTH LEVEES (FM 1015 TO BASELINE RD)				12.15

n:\project\u2450\u2450510 - lower rgfcp\scanned drawings\dgn structures\0450515\0450NFW1SDRCV11.dgn

STRUCTURE TYPE:
DRAINAGE

SCALE H: 1"=20'
V: 1"=10'

PLAN VIEW LEGEND

- PROP CENTERLINE
- EXIST RIGHT-OF-WAY
- EXIST GEOTECHNICAL BORE
- EXIST FLOODWALL
- EL-OH — EXIST OVERHEAD UTILITY LINE
- EXIST SIGN
- 101 — EXIST CONTOURS
- EXIST LEVEE TOE
- F/O — EXIST FIBER OPTIC LINE
- GAS — EXIST GAS LINE
- W — EXIST WATER LINE
- T — EXIST TELEPHONE LINE
- X — EXIST FENCE
- PROP SEDIMENT CONTROL FENCE
- WATER BOUNDARY
- PROP LEVEE MAINTENANCE ROAD

NOTES:

1. CULVERT INFORMATION TAKEN FROM AS BUILT PROVIDED BY IBWC IF AVAILABLE.
2. CULVERTS WERE NOT CHECKED FOR HYDRAULICS ADEQUACY UNDER THIS TASK ORDER.
3. FOR GATEWELL ADJUSTMENT REFER TO SHEETS 12.58 & 12.59.
4. FOR CULVERT EXTENSION REFER TO SHEETS 12.60, & 12.61.
5. FOR CURB EXTENSION REFER TO SHEET 12.57.

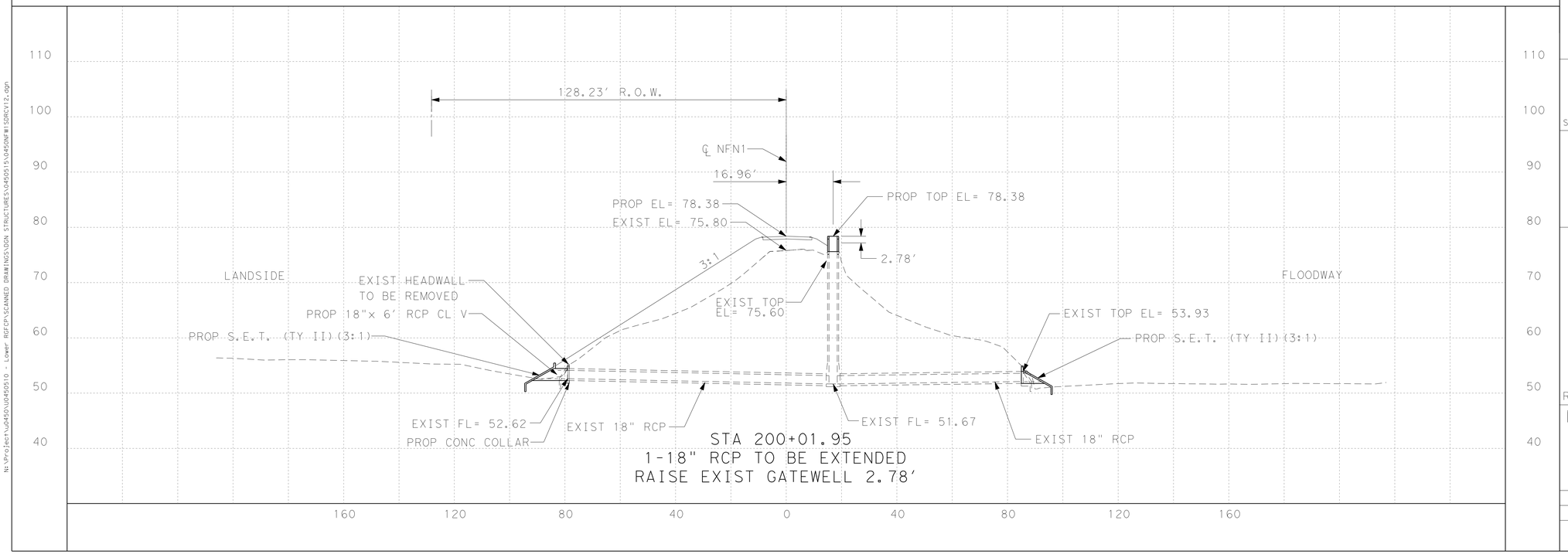

N:\Project\0450\0450510 - Lower RGFCP\SCANNED DRAWINGS\DGN STRUCTURES\045051S\0450NFWISDRCV12.dgn

S&B INFRASTRUCTURE, LTD.
Engineering Management Technology
S&B Infrastructure, Ltd. Firm Registration Number: 1582

DL, INC.
DOS LOGISTICS, INC.
212 W. 3rd Sreet Weslaco, Tx. 78596
Phone: (956) 968-8800 Fax: (956) 447-8194
Dos Logistics, Inc. Firm Registration Number: F-9225

STATE OF TEXAS
JOSE G. REYES JR.
93827
LICENSED PROFESSIONAL ENGINEER

The seal appearing on this document was authorized by JOSE G. REYES JR. P.E. 93827 on JUL 29 20 09
P.E.

REVISED 07/29/2009

NORTH FLOODWAY NORTH LEVEE (NFN1) STRUCTURE NO. 120A STA 200+01.95

SHEET 12 OF 50

STATE	COUNTY	DRAWN BY:	CHECKED BY:	
TEXAS	HIDALGO	PROJECT NO.	IBM09T0018	SHEET NO.
REHABILITATION OF NORTH FLOODWAY NORTH AND SOUTH LEVEES (FM 1015 TO BASELINE RD)				12.16

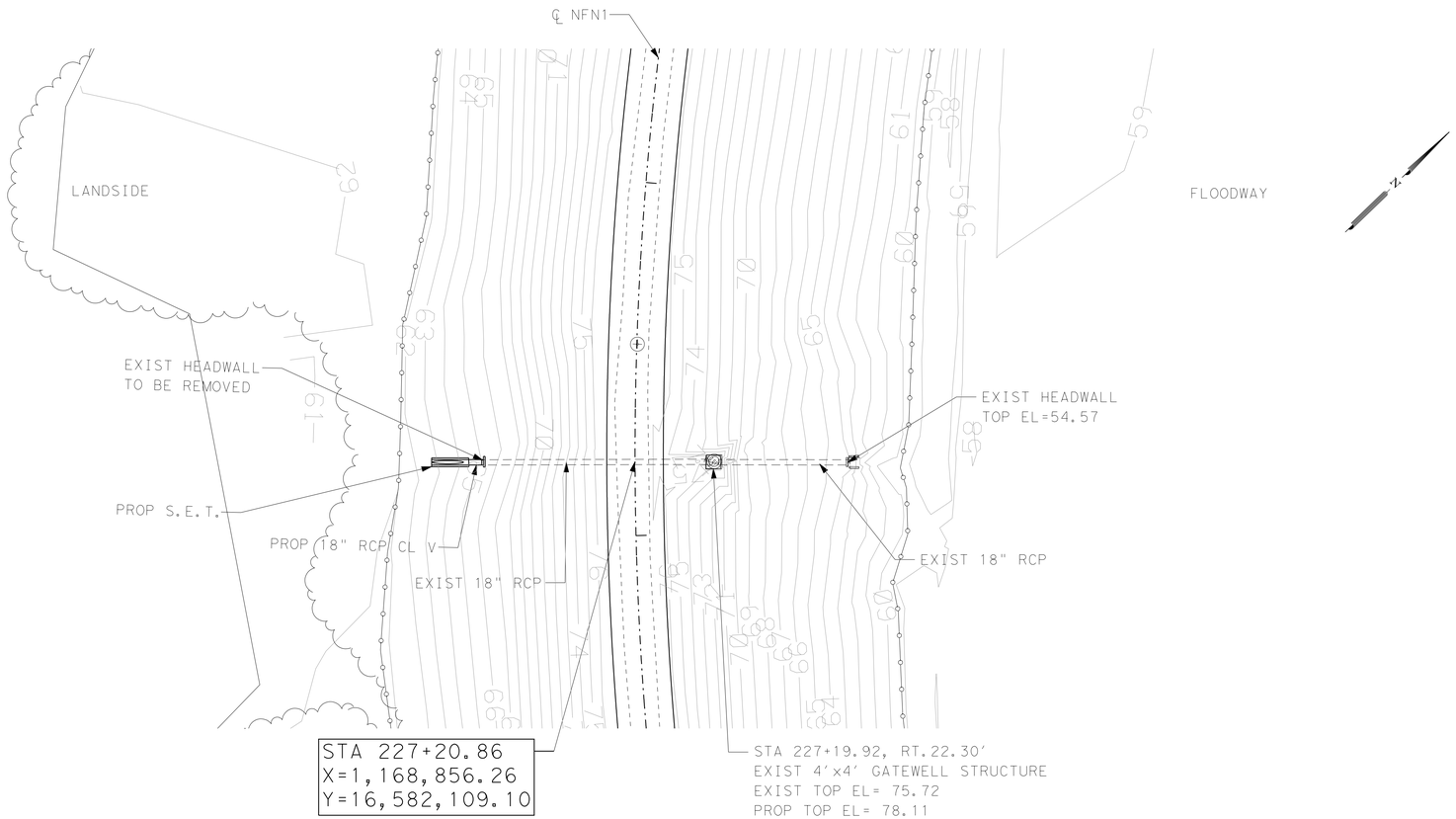

STRUCTURE TYPE:
IRRIGATION

SCALE H: 1"=20'
V: 1"=10'

PLAN VIEW LEGEND

- PROP CENTERLINE
- EXIST RIGHT-OF-WAY
- EXIST GEOTECHNICAL BORE
- EXIST FLOODWALL
- EL-OH — EXIST OVERHEAD UTILITY LINE
- EXIST SIGN
- 101 — EXIST CONTOURS
- EXIST LEVEE TOE
- F/O — EXIST FIBER OPTIC LINE
- GAS — EXIST GAS LINE
- W — EXIST WATER LINE
- T — EXIST TELEPHONE LINE
- X — EXIST FENCE
- PROP SEDIMENT CONTROL FENCE
- WATER BOUNDARY
- PROP LEVEE MAINTENANCE ROAD

NOTES:

1. CULVERT INFORMATION TAKEN FROM AS BUILT PROVIDED BY IBWC IF AVAILABLE.
2. CULVERTS WERE NOT CHECKED FOR HYDRAULICS ADEQUACY UNDER THIS TASK ORDER.
3. FOR GATEWELL ADJUSTMENT REFER TO SHEETS 12.58 & 12.59.
4. FOR CULVERT EXTENSION REFER TO SHEETS 12.60, & 12.61.
5. FOR CURB EXTENSION REFER TO SHEET 12.57.

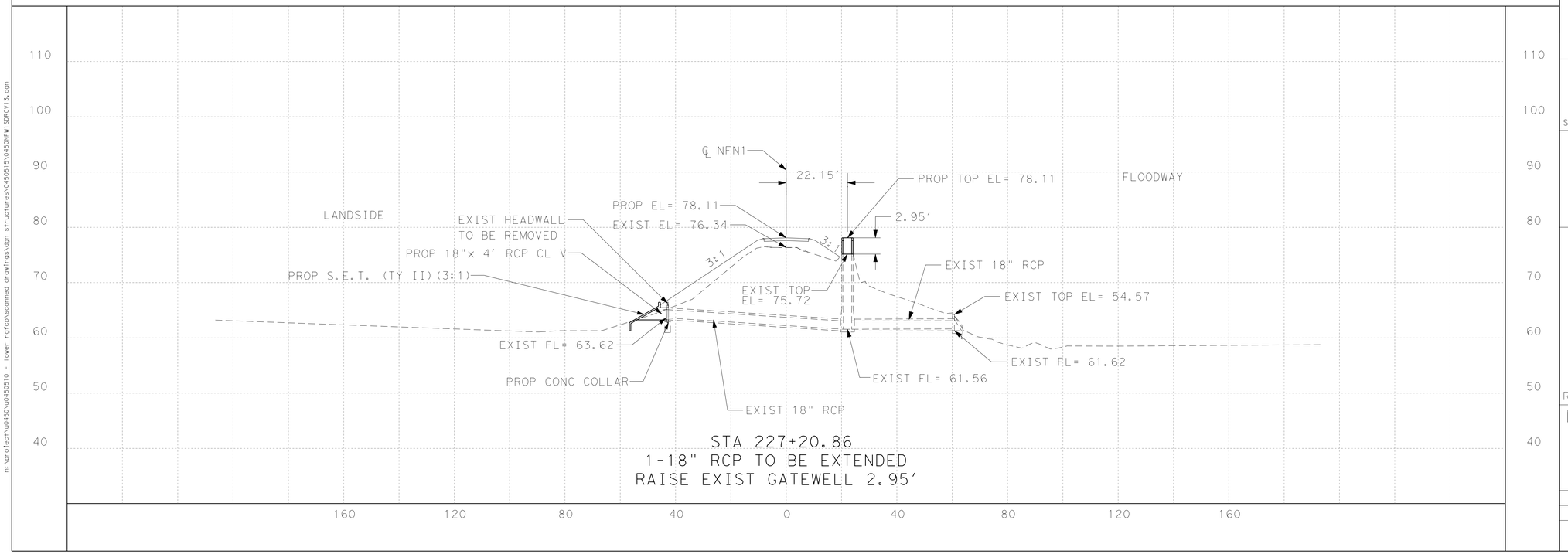

STA 227+20.86
1-18" RCP TO BE EXTENDED
RAISE EXIST GATEWELL 2.95'

m:\project\u0450\u0450510 - lower rgfcp\scanned drawings\dgn structures\0450515\0450NFW1SGRCV13.dgn

S&B INFRASTRUCTURE, LTD.
Engineering Management Technology
S&B Infrastructure, Ltd. Firm Registration Number: 1582

DL, INC.
DOS LOGISTICS, INC.
212 W. 3rd Sreet Phone: (956) 968-8800
Weslaco, Tx. 78596 Fax: (956) 447-8194
Dos Logistics, Inc. Firm Registration Number: F-9225

STATE OF TEXAS
JOSE G. REYES JR.
93827
LICENSED PROFESSIONAL ENGINEER
The seal appearing on this document was authorized by JOSE G. REYES JR. P.E. 93827 on JUL. 29, 2009
P.E.

REVISED 07/29/2009

NORTH FLOODWAY NORTH LEVEE (NFN1) STRUCTURE NO. 121 STA 227+20.86

SHEET 13 OF 50

STATE	COUNTY	DRAWN BY:	CHECKED BY:	
TEXAS	HIDALGO	PROJECT NO.	IBM09T0018	SHEET NO.
REHABILITATION OF NORTH FLOODWAY NORTH AND SOUTH LEVEES (FM 1015 TO BASELINE RD)				12.17

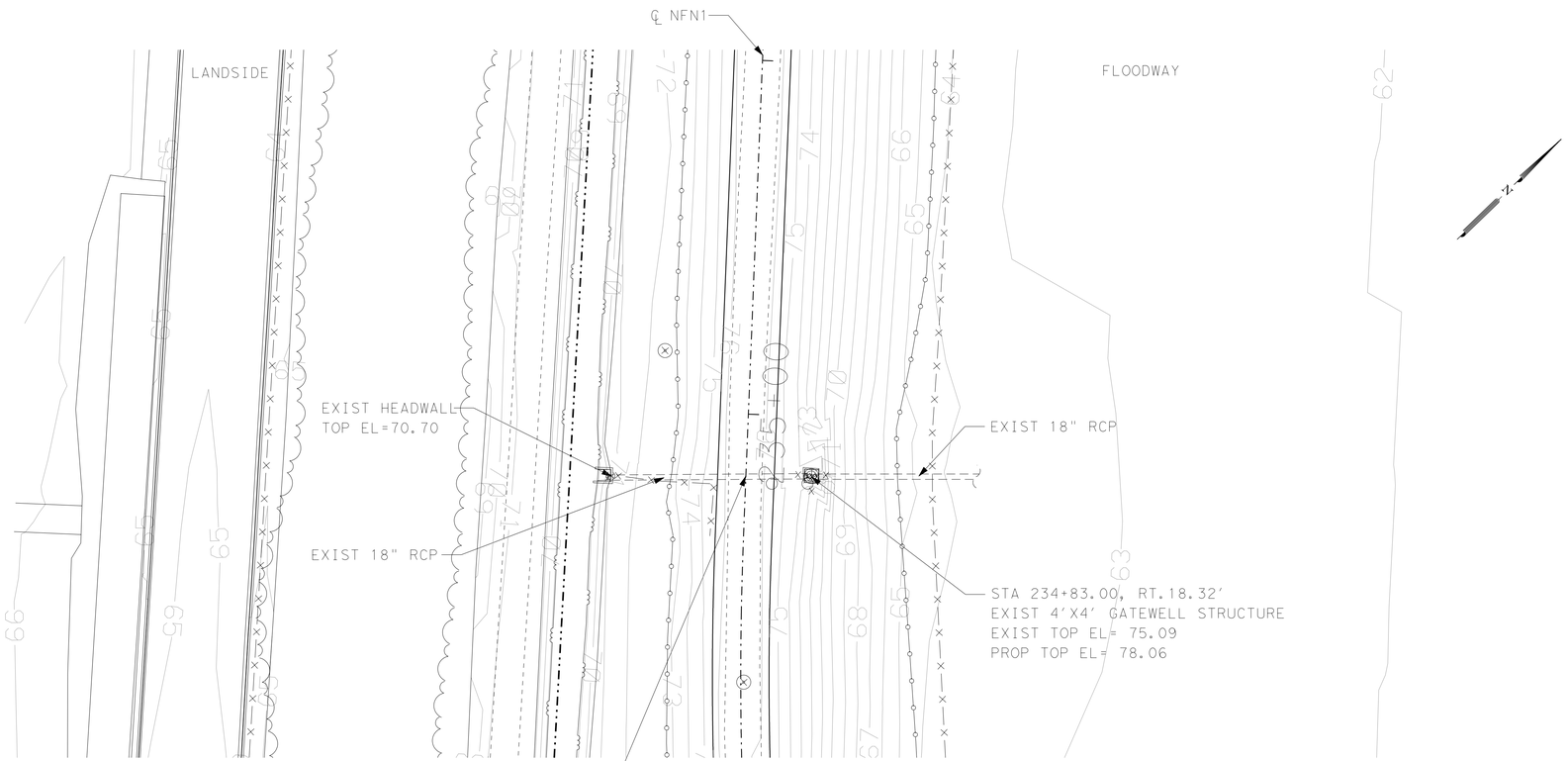

STRUCTURE TYPE:
IRRIGATION

SCALE H: 1"=20'
V: 1"=10'

PLAN VIEW LEGEND

- PROP CENTERLINE
- EXIST RIGHT-OF-WAY
- EXIST GEOTECHNICAL BORE
- EXIST FLOODWALL
- EL-OH — EXIST OVERHEAD UTILITY LINE
- EXIST SIGN
- 101 — EXIST CONTOURS
- EXIST LEVEE TOE
- F/O — EXIST FIBER OPTIC LINE
- GAS — EXIST GAS LINE
- W — EXIST WATER LINE
- T — EXIST TELEPHONE LINE
- X — EXIST FENCE
- PROP SEDIMENT CONTROL FENCE
- WATER BOUNDARY
- PROP LEVEE MAINTENANCE ROAD

NOTES:

1. CULVERT INFORMATION TAKEN FROM AS BUILT PROVIDED BY IBWC IF AVAILABLE.
2. CULVERTS WERE NOT CHECKED FOR HYDRAULICS ADEQUACY UNDER THIS TASK ORDER.
3. FOR GATEWELL ADJUSTMENT REFER TO SHEETS 12.58 & 12.59.
4. FOR CULVERT EXTENSION REFER TO SHEETS 12.60, & 12.61.
5. FOR CURB EXTENSION REFER TO SHEET 12.57.

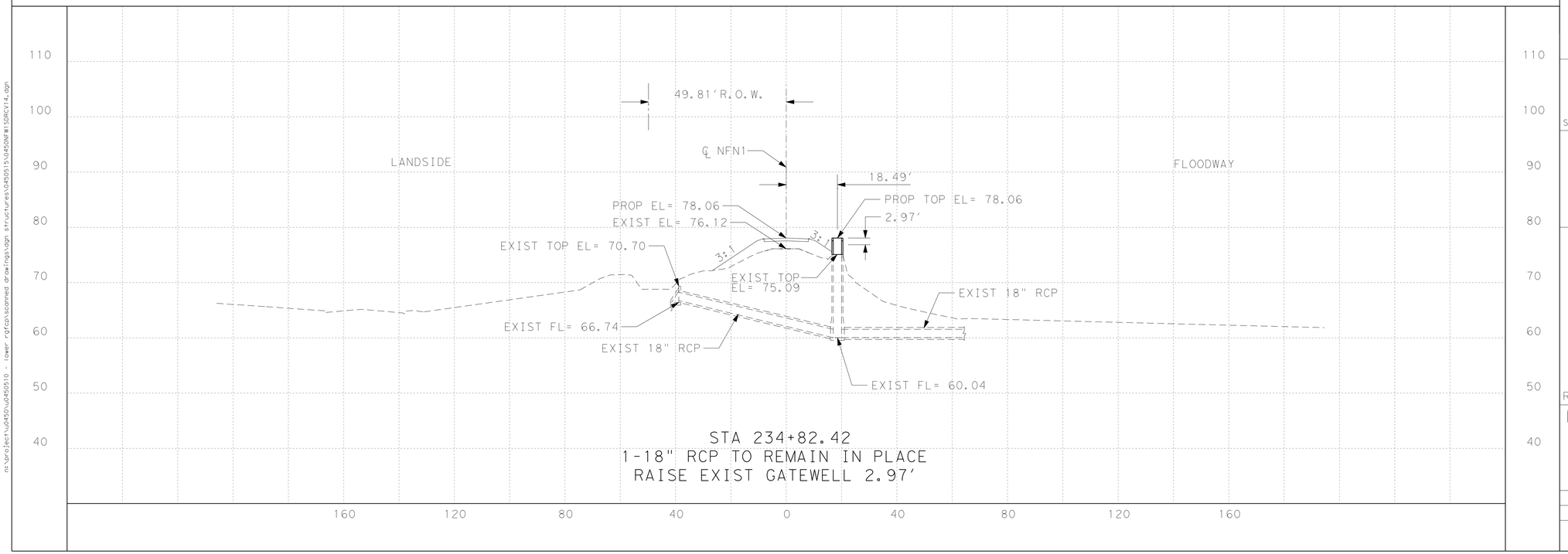

S&B INFRASTRUCTURE, LTD.
Engineering Management Technology
S&B Infrastructure, Ltd. Firm Registration Number: 1582

DL, INC.
DOS LOGISTICS, INC.
212 W. 3rd Sreet
Weslaco, Tx. 78596
Phone: (956) 968-8800
Fax: (956) 447-8194
Dos Logistics, Inc. Firm Registration Number: F-9225

STATE OF TEXAS
JOSE G. REYES JR.
93827
LICENSED
PROFESSIONAL ENGINEER

The seal appearing on this document was authorized by JOSE G. REYES JR. P.E. 93827 on JUL 29 20 09

REVISED 07/29/2009

NORTH FLOODWAY NORTH LEVEE (NFN1)
STRUCTURE NO. 122
STA 234+82.42

SHEET 14 OF 50

STATE	COUNTY	DRAWN BY:	CHECKED BY:	
TEXAS	HIDALGO	PROJECT NO.	IBM09T0018	SHEET NO.
REHABILITATION OF NORTH FLOODWAY NORTH AND SOUTH LEVEES (FM 1015 TO BASELINE RD)				12.18

n:\project\p450\p450510 - lower rgfcp\scanned drawings\dgn structures\045015\045DNFWISDRCV14.dgn

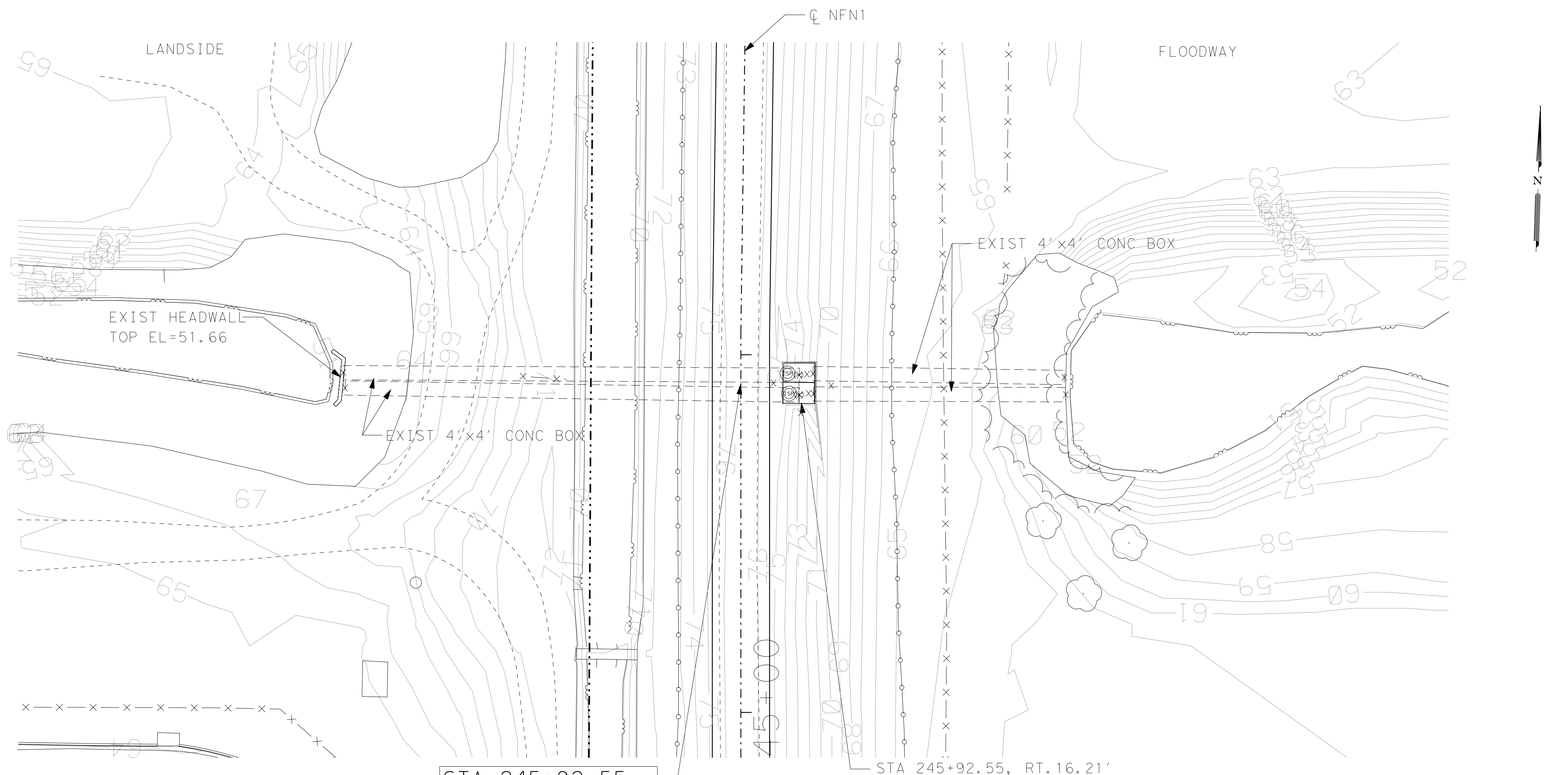

STRUCTURE TYPE:
DRAINAGE

SCALE H: 1"=20'
V: 1"=10'

PLAN VIEW LEGEND

- PROP CENTERLINE
- EXIST RIGHT-OF-WAY
- EXIST GEOTECHNICAL BORE
- EXIST FLOODWALL
- EL-OH — EXIST OVERHEAD UTILITY LINE
- EXIST SIGN
- 101 — EXIST CONTOURS
- EXIST LEVEE TOE
- F/O — EXIST FIBER OPTIC LINE
- GAS — EXIST GAS LINE
- W — EXIST WATER LINE
- T — EXIST TELEPHONE LINE
- X — EXIST FENCE
- PROP SEDIMENT CONTROL FENCE
- WATER BOUNDARY
- PROP LEVEE MAINTENANCE ROAD

NOTES:

1. CULVERT INFORMATION TAKEN FROM AS BUILT PROVIDED BY IBWC IF AVAILABLE.
2. CULVERTS WERE NOT CHECKED FOR HYDRAULICS ADEQUACY UNDER THIS TASK ORDER.
3. FOR GATEWELL ADJUSTMENT REFER TO SHEETS 12.58 & 12.59.
4. FOR CULVERT EXTENSION REFER TO SHEETS 12.60, & 12.61.
5. FOR CURB EXTENSION REFER TO SHEET 12.57.

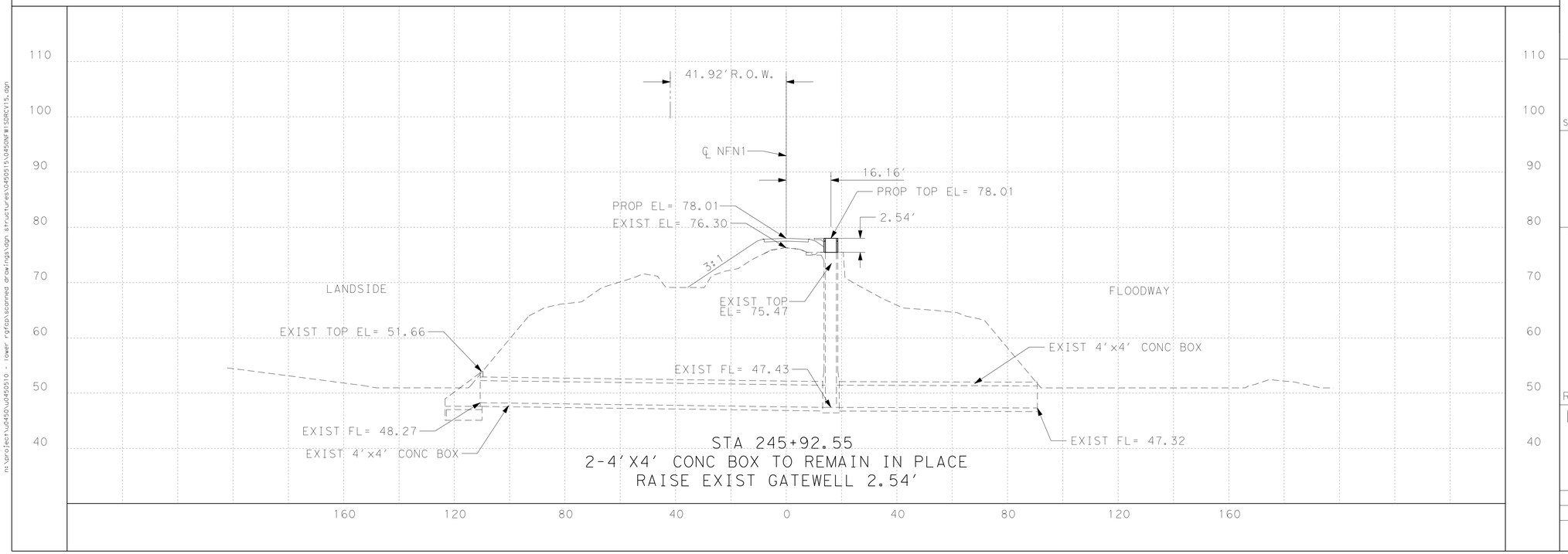

S&B INFRASTRUCTURE, LTD.
Engineering Management Technology
S&B Infrastructure, Ltd. Firm Registration Number: 1582

DL, INC.
DOS LOGISTICS, INC.
212 W. 3rd Sreet
Weslaco, Tx. 78596
Phone: (956) 968-8800
Fax: (956) 447-8194
Dos Logistics, Inc. Firm Registration Number: F-9225

STATE OF TEXAS
JOSE G. REYES JR.
93827
LICENSED
PROFESSIONAL ENGINEER

The seal appearing on this document was authorized by JOSE G. REYES JR. P.E. 93827 on JUL 29 20 09

REVISED 07/29/2009

NORTH FLOODWAY NORTH LEVEE (NFN1)
STRUCTURE NO. 124
STA 245+92.55

SHEET 15 OF 50

STATE	COUNTY	DRAWN BY:	CHECKED BY:	
TEXAS	HIDALGO	PROJECT NO.	IBM09T0018	SHEET NO.
REHABILITATION OF NORTH FLOODWAY NORTH AND SOUTH LEVEES (FM 1015 TO BASELINE RD)				12.19

n:\project\u2450\u2450510 - lower rgfcp\scanned drawings\dgn structures\02450515\02450NFW1SDRCV15.dgn

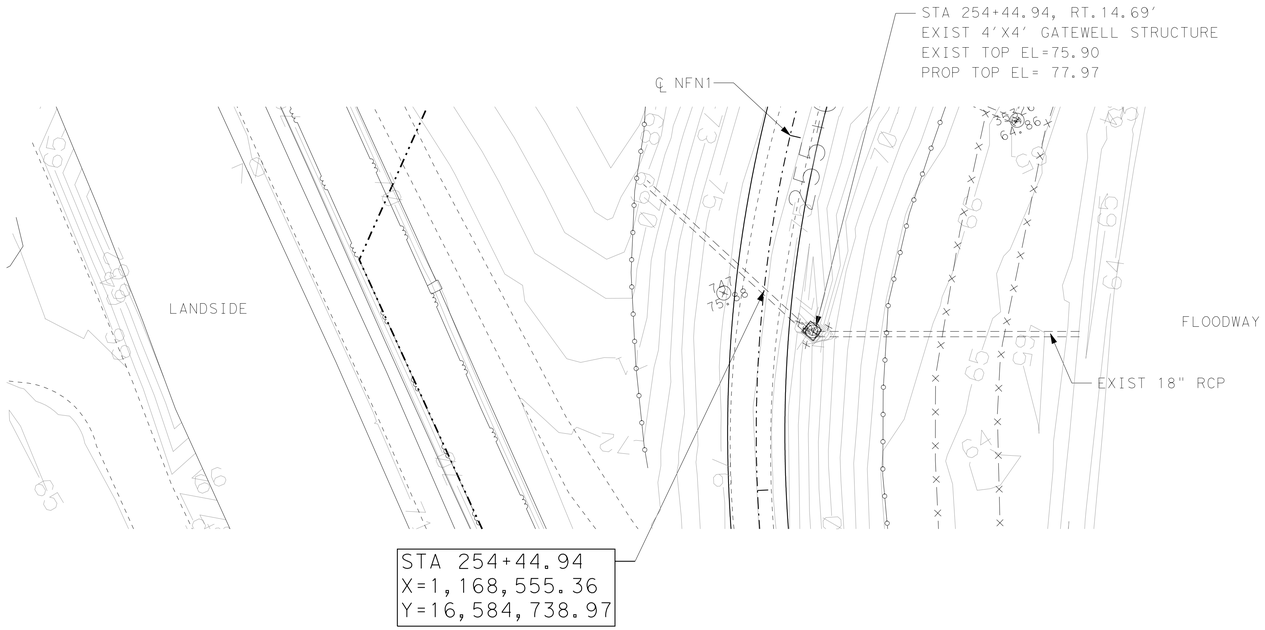

PLAN VIEW LEGEND

- PROP CENTERLINE
- EXIST RIGHT-OF-WAY
- EXIST GEOTECHNICAL BORE
- EXIST FLOODWALL
- EL-OH — EXIST OVERHEAD UTILITY LINE
- EXIST SIGN
- 101 — EXIST CONTOURS
- EXIST LEVEE TOE
- F/O — EXIST FIBER OPTIC LINE
- GAS — EXIST GAS LINE
- W — EXIST WATER LINE
- T — EXIST TELEPHONE LINE
- X — EXIST FENCE
- PROP SEDIMENT CONTROL FENCE
- WATER BOUNDARY
- PROP LEVEE MAINTENANCE ROAD

NOTES:

1. CULVERT INFORMATION TAKEN FROM AS BUILT PROVIDED BY IBWC IF AVAILABLE.
2. CULVERTS WERE NOT CHECKED FOR HYDRAULICS ADEQUACY UNDER THIS TASK ORDER.
3. FOR GATEWELL ADJUSTMENT REFER TO SHEETS 12.58 & 12.59.
4. FOR CULVERT EXTENSION REFER TO SHEETS 12.60, & 12.61.
5. FOR CURB EXTENSION REFER TO SHEET 12.57.

STRUCTURE TYPE:
DRAINAGE

SCALE H: 1"=20'
V: 1"=10'

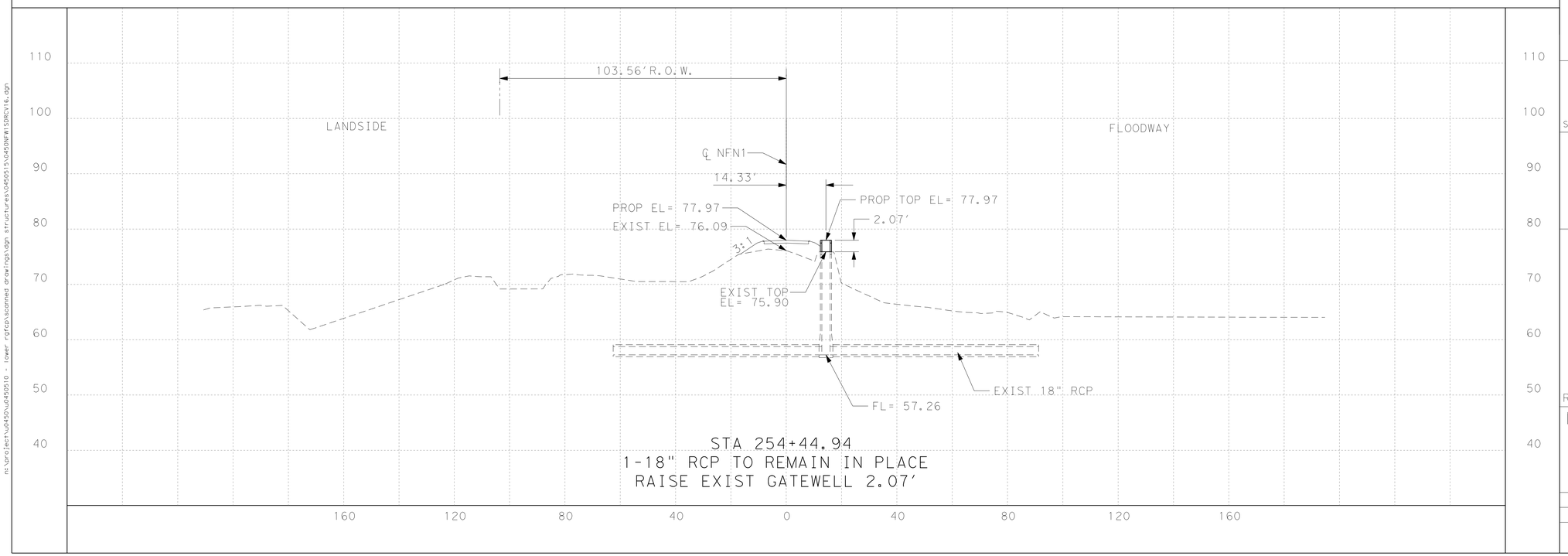

S&B INFRASTRUCTURE, LTD.
Engineering Management Technology
S&B Infrastructure, Ltd. Firm Registration Number: 1582

DL, INC.
DOS LOGISTICS, INC.
212 W. 3rd Sreet
Weslaco, Tx. 78596
Phone: (956) 968-8800
Fax: (956) 447-8194
Dos Logistics, Inc. Firm Registration Number: F-9225

STATE OF TEXAS
JOSE G. REYES JR.
93827
LICENSED
PROFESSIONAL ENGINEER

The seal appearing on this document was authorized by JOSE G. REYES JR. P.E. 93827 on JUL. 29 20 09

REVISED 07/29/2009

NORTH FLOODWAY NORTH LEVEE (NFN1) STRUCTURE NO. 126 STA 254+44.94

SHEET 16 OF 50

STATE	COUNTY	DRAWN BY:	CHECKED BY:	
TEXAS	HIDALGO	PROJECT NO. IBM09T0018		SHEET NO.
REHABILITATION OF NORTH FLOODWAY NORTH AND SOUTH LEVEES (FM 1015 TO BASELINE RD)				12.20

n:\project\u0450\u0450510 - lower rgfcp\scanned drawings\dgn structures\0450515\0450NFW15DRCV16.dgn

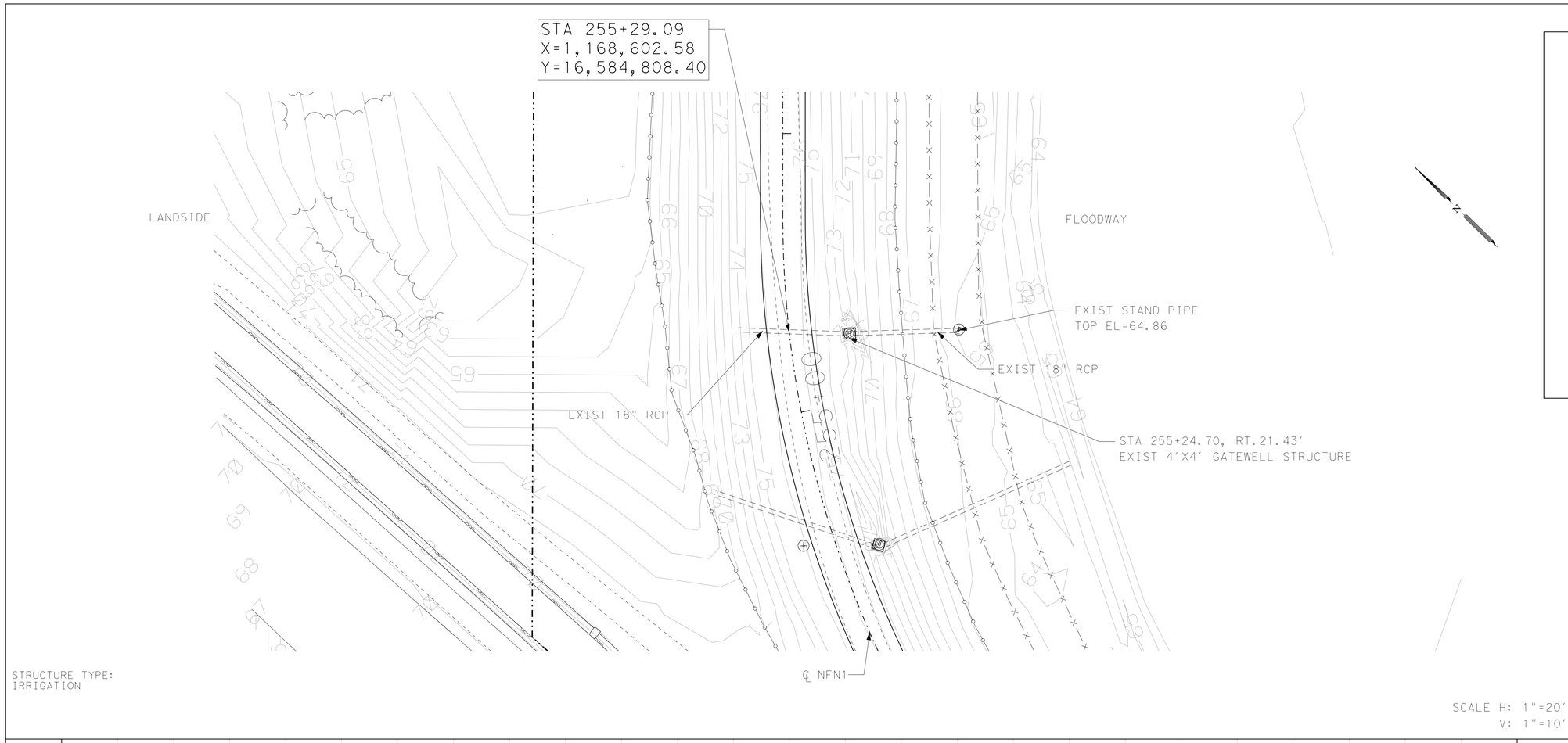

STRUCTURE TYPE:
IRRIGATION

SCALE H: 1"=20'
V: 1"=10'

PLAN VIEW LEGEND

- PROP CENTERLINE
- EXIST RIGHT-OF-WAY
- EXIST GEOTECHNICAL BORE
- EXIST FLOODWALL
- EL-OH — EXIST OVERHEAD UTILITY LINE
- EXIST SIGN
- 101 — EXIST CONTOURS
- EXIST LEVEE TOE
- F/O — EXIST FIBER OPTIC LINE
- GAS — EXIST GAS LINE
- W — EXIST WATER LINE
- T — EXIST TELEPHONE LINE
- X — EXIST FENCE
- PROP SEDIMENT CONTROL FENCE
- WATER BOUNDARY
- PROP LEVEE MAINTENANCE ROAD

NOTES:

1. CULVERT INFORMATION TAKEN FROM AS BUILT PROVIDED BY IBWC IF AVAILABLE.
2. CULVERTS WERE NOT CHECKED FOR HYDRAULICS ADEQUACY UNDER THIS TASK ORDER.
3. FOR GATEWELL ADJUSTMENT REFER TO SHEETS 12.58 & 12.59.
4. FOR CULVERT EXTENSION REFER TO SHEETS 12.60, & 12.61.
5. FOR CURB EXTENSION REFER TO SHEET 12.57.

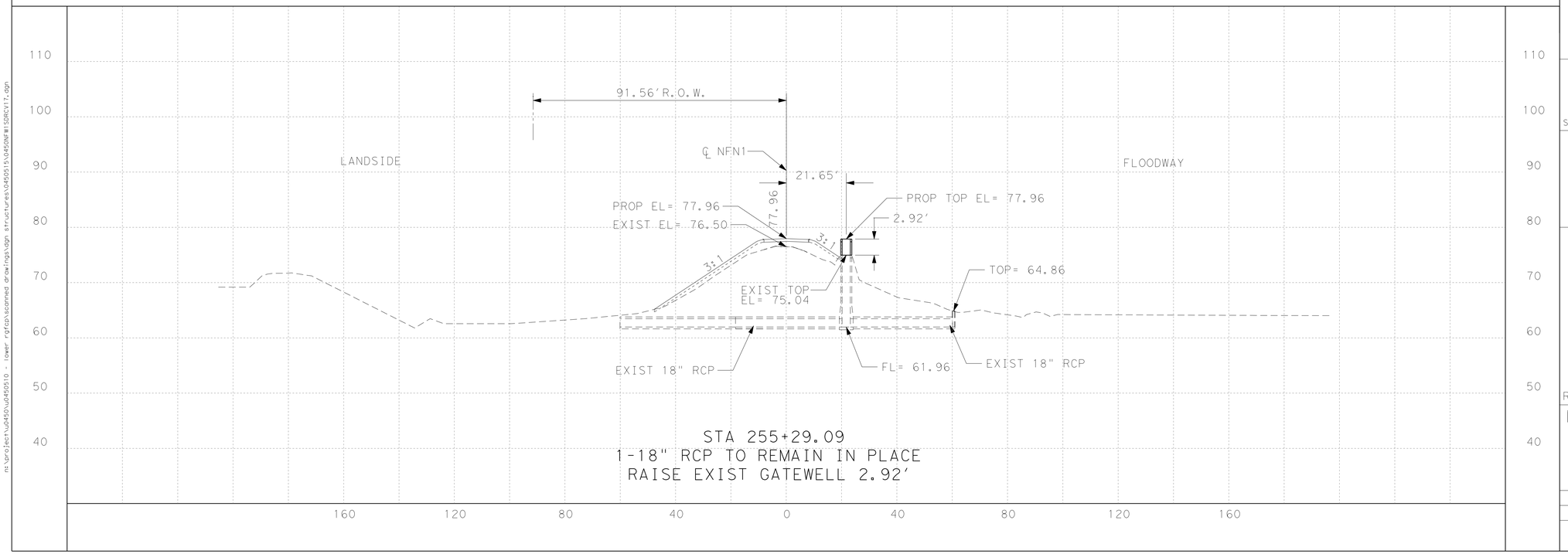

S&B INFRASTRUCTURE, LTD.
Engineering Management Technology
S&B Infrastructure, Ltd. Firm Registration Number: 1582

DL, INC.
DOS LOGISTICS, INC.
212 W. 3rd Sreet
Weslaco, Tx. 78596
Phone: (956) 968-8800
Fax: (956) 447-8194
Dos Logistics, Inc. Firm Registration Number: F-9225

STATE OF TEXAS
JOSE G. REYES JR.
93827
LICENSED
PROFESSIONAL ENGINEER

The seal appearing on this document was authorized by JOSE G. REYES JR. P.E. 93827 on JUL 29 20 09

P.E.

REVISED 07/29/2009

NORTH FLOODWAY NORTH LEVEE (NFN1)
STRUCTURE NO. 127
STA 255+29.09

SHEET 17 OF 50

STATE	COUNTY	DRAWN BY:	CHECKED BY:	
TEXAS	HIDALGO	PROJECT NO.	IBM09T0018	SHEET NO.
REHABILITATION OF NORTH FLOODWAY NORTH AND SOUTH LEVEES (FM 1015 TO BASELINE RD)				12.21

n:\project\u2450\u2450510 - lower rgfcp\scanned drawings\dgn structures\U450515\U450NFW1SDRCV17.dgn

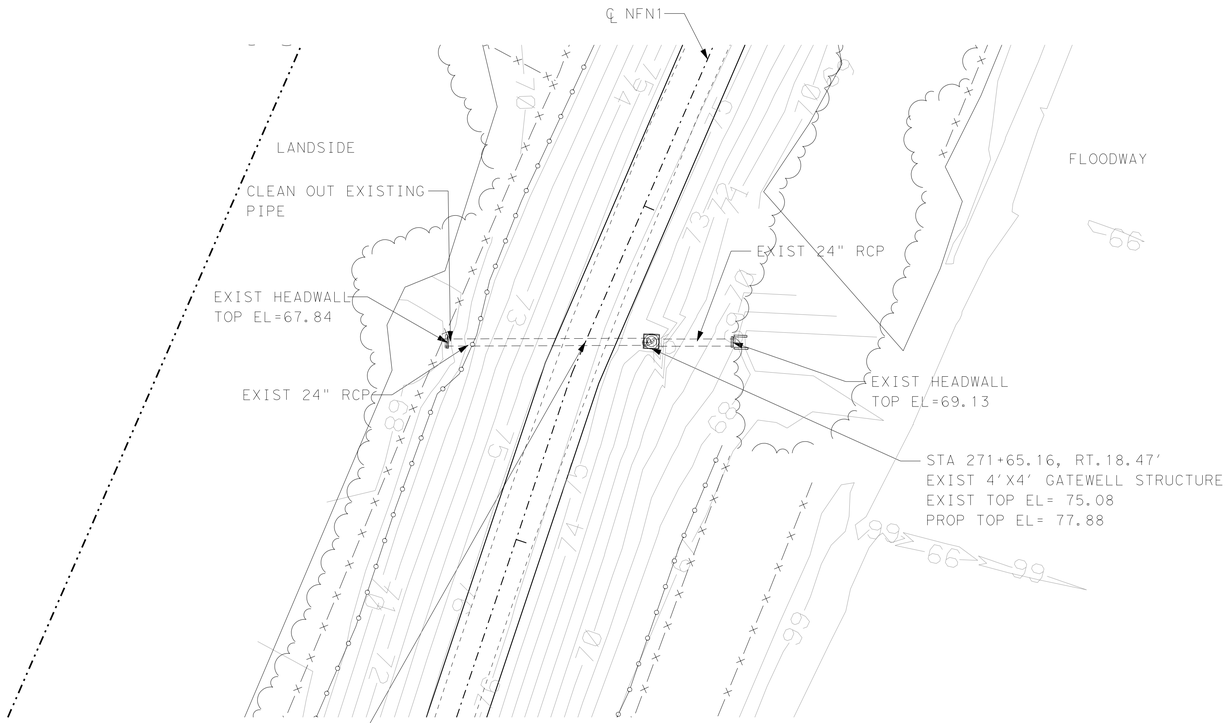

STRUCTURE TYPE:
IRRIGATION

SCALE H: 1"=20'
V: 1"=10'

PLAN VIEW LEGEND

- PROP CENTERLINE
- EXIST RIGHT-OF-WAY
- EXIST GEOTECHNICAL BORE
- EXIST FLOODWALL
- EL-OH — EXIST OVERHEAD UTILITY LINE
- EXIST SIGN
- 101 — EXIST CONTOURS
- EXIST LEVEE TOE
- F/O — EXIST FIBER OPTIC LINE
- GAS — EXIST GAS LINE
- W — EXIST WATER LINE
- T — EXIST TELEPHONE LINE
- X — EXIST FENCE
- PROP SEDIMENT CONTROL FENCE
- WATER BOUNDARY
- PROP LEVEE MAINTENANCE ROAD

NOTES:

1. CULVERT INFORMATION TAKEN FROM AS BUILT PROVIDED BY IBWC IF AVAILABLE.
2. CULVERTS WERE NOT CHECKED FOR HYDRAULICS ADEQUACY UNDER THIS TASK ORDER.
3. FOR GATEWELL ADJUSTMENT REFER TO SHEETS 12.58 & 12.59.
4. FOR CULVERT EXTENSION REFER TO SHEETS 12.60, & 12.61.
5. FOR CURB EXTENSION REFER TO SHEET 12.57.

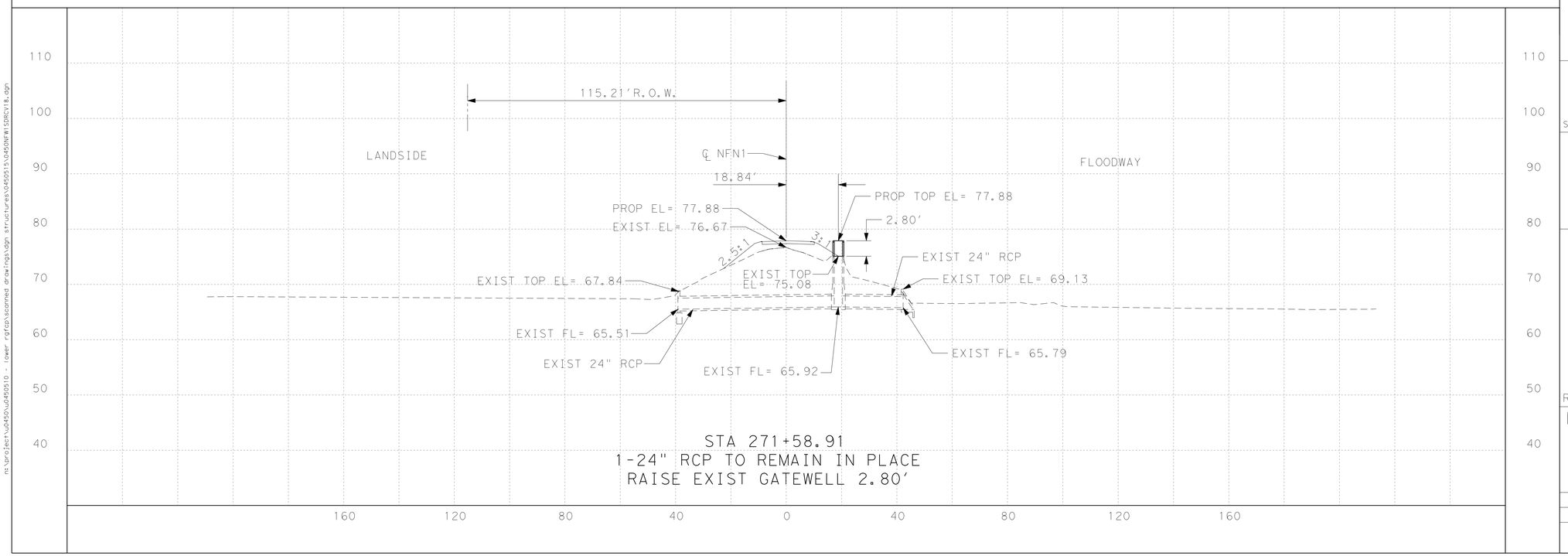

S&B INFRASTRUCTURE, LTD.
Engineering Management Technology
S&B Infrastructure, Ltd. Firm Registration Number: 1582

DL, INC.
DOS LOGISTICS, INC.
212 W. 3rd Sreet Weslaco, Tx. 78596
Phone: (956) 968-8800 Fax: (956) 447-8194
Dos Logistics, Inc. Firm Registration Number: F-9225

STATE OF TEXAS
JOSE G. REYES JR.
93827
LICENSED PROFESSIONAL ENGINEER

The seal appearing on this document was authorized by JOSE G. REYES JR. P.E. 93827 on JUL 29 2009

REVISED 07/29/2009

NORTH FLOODWAY NORTH LEVEE (NFN1) STRUCTURE NO. 128 STA 271+58.91

SHEET 18 OF 50

STATE	COUNTY	DRAWN BY:	CHECKED BY:	
TEXAS	HIDALGO	PROJECT NO. IBM09T0018		SHEET NO.
REHABILITATION OF NORTH FLOODWAY NORTH AND SOUTH LEVEES (FM 1015 TO BASELINE RD)				12.22

n:\project\u0450\u0450510 - lower rgfcp\scanned drawings\dgn structures\0450515\0450NFW15DRCV18.dgn

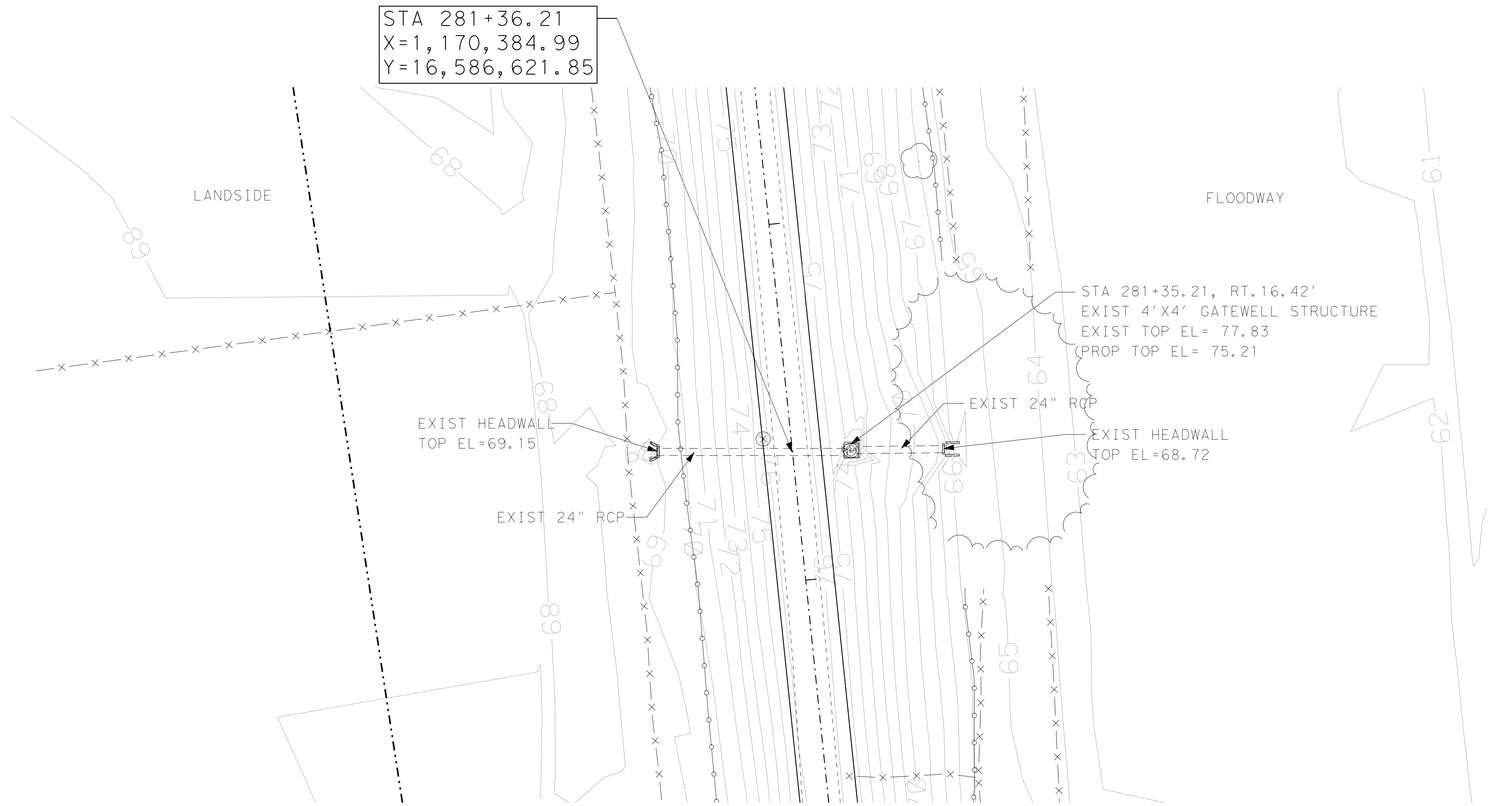

STRUCTURE TYPE:
IRRIGATION

SCALE H: 1"=20'
V: 1"=10'

PLAN VIEW LEGEND

- PROP CENTERLINE
- EXIST RIGHT-OF-WAY
- EXIST GEOTECHNICAL BORE
- EXIST FLOODWALL
- EL-OH — EXIST OVERHEAD UTILITY LINE
- EXIST SIGN
- 101 — EXIST CONTOURS
- EXIST LEVEE TOE
- F/O — EXIST FIBER OPTIC LINE
- GAS — EXIST GAS LINE
- W — EXIST WATER LINE
- T — EXIST TELEPHONE LINE
- EXIST FENCE
- PROP SEDIMENT CONTROL FENCE
- WATER BOUNDARY
- PROP LEVEE MAINTENANCE ROAD

NOTES:
1. CULVERT INFORMATION TAKEN FROM AS BUILT PROVIDED BY IBWC IF AVAILABLE.
2. CULVERTS WERE NOT CHECKED FOR HYDRAULICS ADEQUACY UNDER THIS TASK ORDER.
3. FOR GATEWELL ADJUSTMENT REFER TO SHEETS 12.58 & 12.59.
4. FOR CULVERT EXTENSION REFER TO SHEETS 12.60, & 12.61.
5. FOR CURB EXTENSION REFER TO SHEET 12.57.

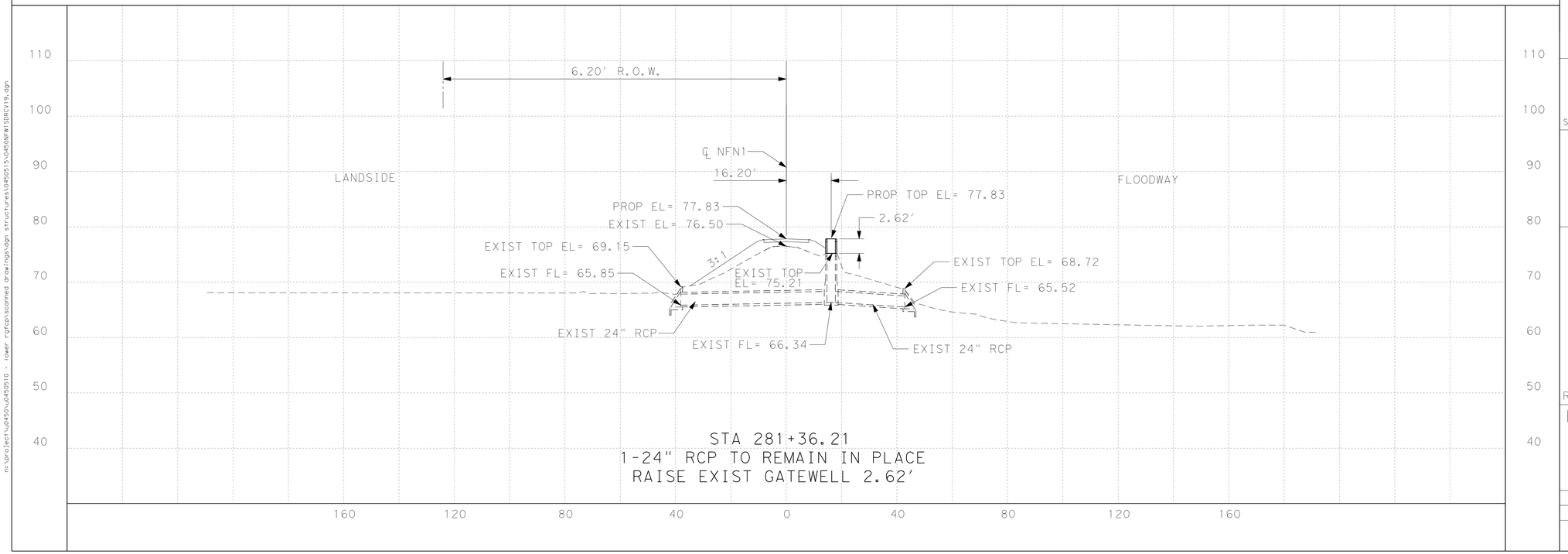

STA 281+36.21
1-24" RCP TO REMAIN IN PLACE
RAISE EXIST GATEWELL 2.62'

S&B INFRASTRUCTURE, LTD.
Engineering Management Technology
S&B Infrastructure, Ltd. Firm Registration Number: 1582

DL, INC.
DOS LOGISTICS, INC.
212 W. 3rd Sreet
Weslaco, Tx. 78596
Phone: (956) 968-8800
Fax: (956) 447-8194
Dos Logistics, Inc. Firm Registration Number: F-9225

STATE OF TEXAS
JOSE G. REYES JR.
93827
LICENSED
PROFESSIONAL ENGINEER

The seal appearing on this document was authorized by JOSE G. REYES JR. P.E. 93827 on JUL 29 20 09

P.E.

REVISED 07/29/2009

NORTH FLOODWAY NORTH LEVEE (NFN1) STRUCTURE NO. 129 STA 281+36.21

SHEET 19 OF 50

STATE	COUNTY	DRAWN BY:	CHECKED BY:	
TEXAS	HIDALGO	PROJECT NO.	IBM09T0018	SHEET NO.
REHABILITATION OF NORTH FLOODWAY NORTH AND SOUTH LEVEES (FM 1015 TO BASELINE RD)				12.23

ns:\project\p450\p450510 - lower rgfcp\scanned drawings\dgn structures\0450515\0450NFWISDRCV19.dgn

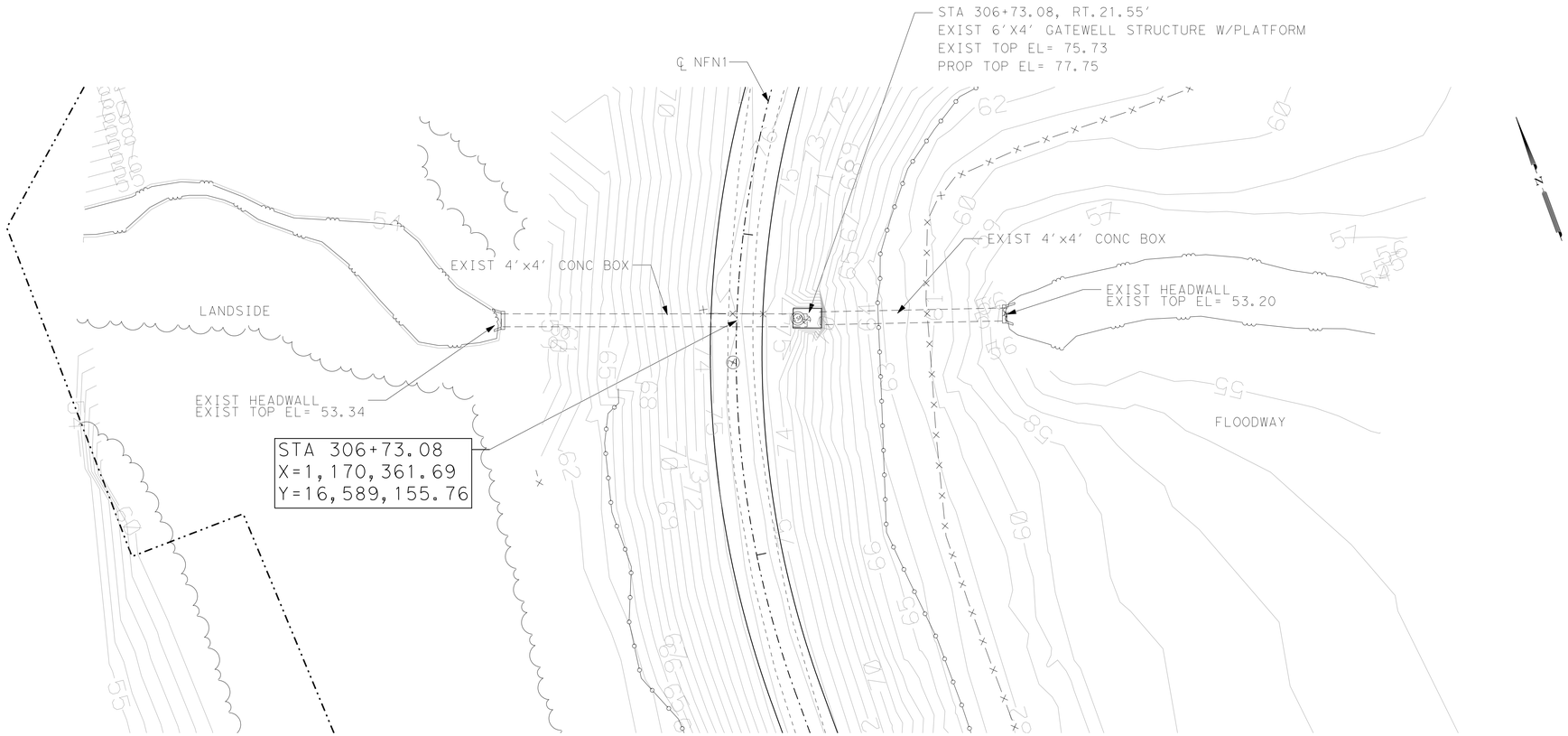

PLAN VIEW LEGEND

- PROP CENTERLINE
- EXIST RIGHT-OF-WAY
- EXIST GEOTECHNICAL BORE
- EXIST FLOODWALL
- EL-OH — EXIST OVERHEAD UTILITY LINE
- EXIST SIGN
- 101 — EXIST CONTOURS
- EXIST LEVEE TOE
- F/O — EXIST FIBER OPTIC LINE
- GAS — EXIST GAS LINE
- W — EXIST WATER LINE
- T — EXIST TELEPHONE LINE
- X — EXIST FENCE
- PROP SEDIMENT CONTROL FENCE
- WATER BOUNDARY
- PROP LEVEE MAINTENANCE ROAD

NOTES:

1. CULVERT INFORMATION TAKEN FROM AS BUILT PROVIDED BY IBWC IF AVAILABLE.
2. CULVERTS WERE NOT CHECKED FOR HYDRAULICS ADEQUACY UNDER THIS TASK ORDER.
3. FOR GATEWELL ADJUSTMENT REFER TO SHEETS 12.58 & 12.59.
4. FOR CULVERT EXTENSION REFER TO SHEETS 12.60, & 12.61.
5. FOR CURB EXTENSION REFER TO SHEET 12.57.

STRUCTURE TYPE:
DRAINAGE

SCALE H: 1"=20'
V: 1"=10'

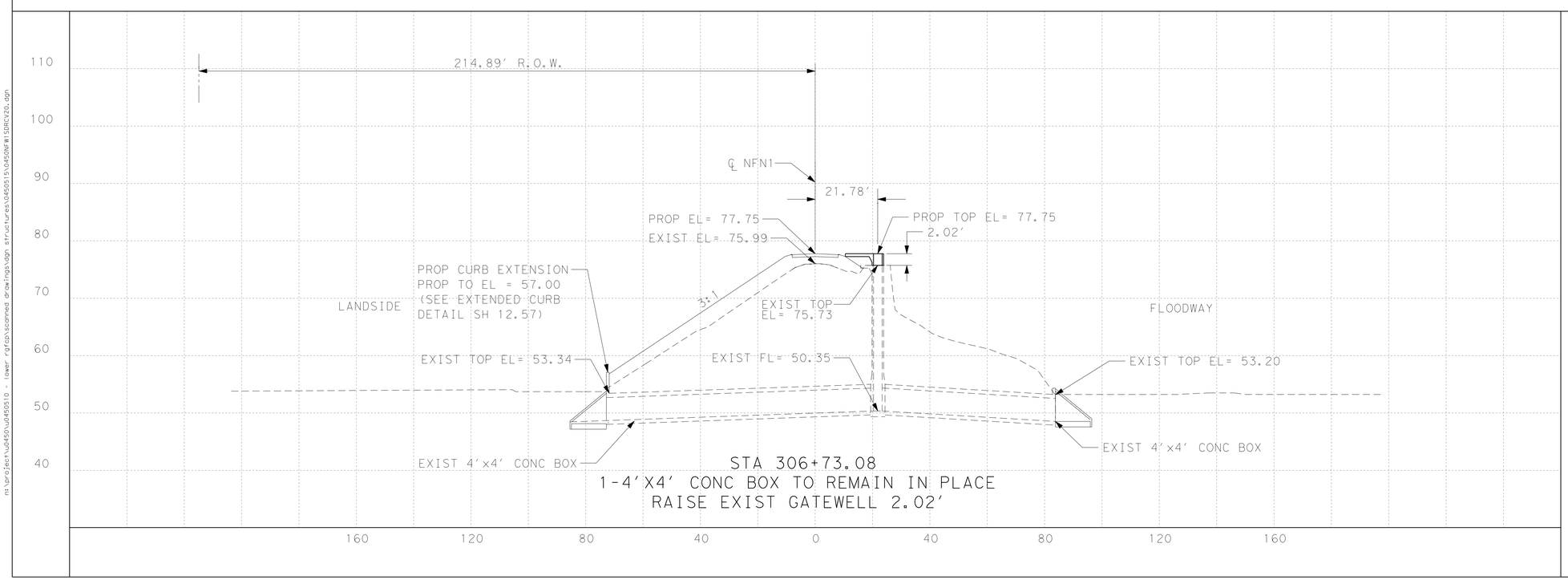

S&B INFRASTRUCTURE, LTD.
Engineering Management Technology
S&B Infrastructure, Ltd. Firm Registration Number: 1582

DL, INC.
DOS LOGISTICS, INC.
212 W. 3rd Sreet
Weslaco, Tx. 78596
Phone: (956) 968-8800
Fax: (956) 447-8194
Dos Logistics, Inc. Firm Registration Number: F-9225

STATE OF TEXAS
JOSE G. REYES JR.
93827
LICENSED
PROFESSIONAL ENGINEER

The seal appearing on this document was authorized by JOSE G. REYES JR. P.E. 93827 on JUL. 29 20 09

REVISED 07/29/2009

NORTH FLOODWAY NORTH LEVEE (NFN1)
STRUCTURE NO. 130
STA 306+73.08

SHEET 20 OF 50

STATE	COUNTY	DRAWN BY:	CHECKED BY:	
TEXAS	HIDALGO	PROJECT NO.	IBM09T0018	SHEET NO.

REHABILITATION OF NORTH FLOODWAY
NORTH AND SOUTH LEVEES
(FM 1015 TO BASELINE RD)

12.24

n:\project\u0450\u0450510 - lower rgfcp\scanned drawings\dgn structures\0450515\0450NFW1SDRCV20.dgn

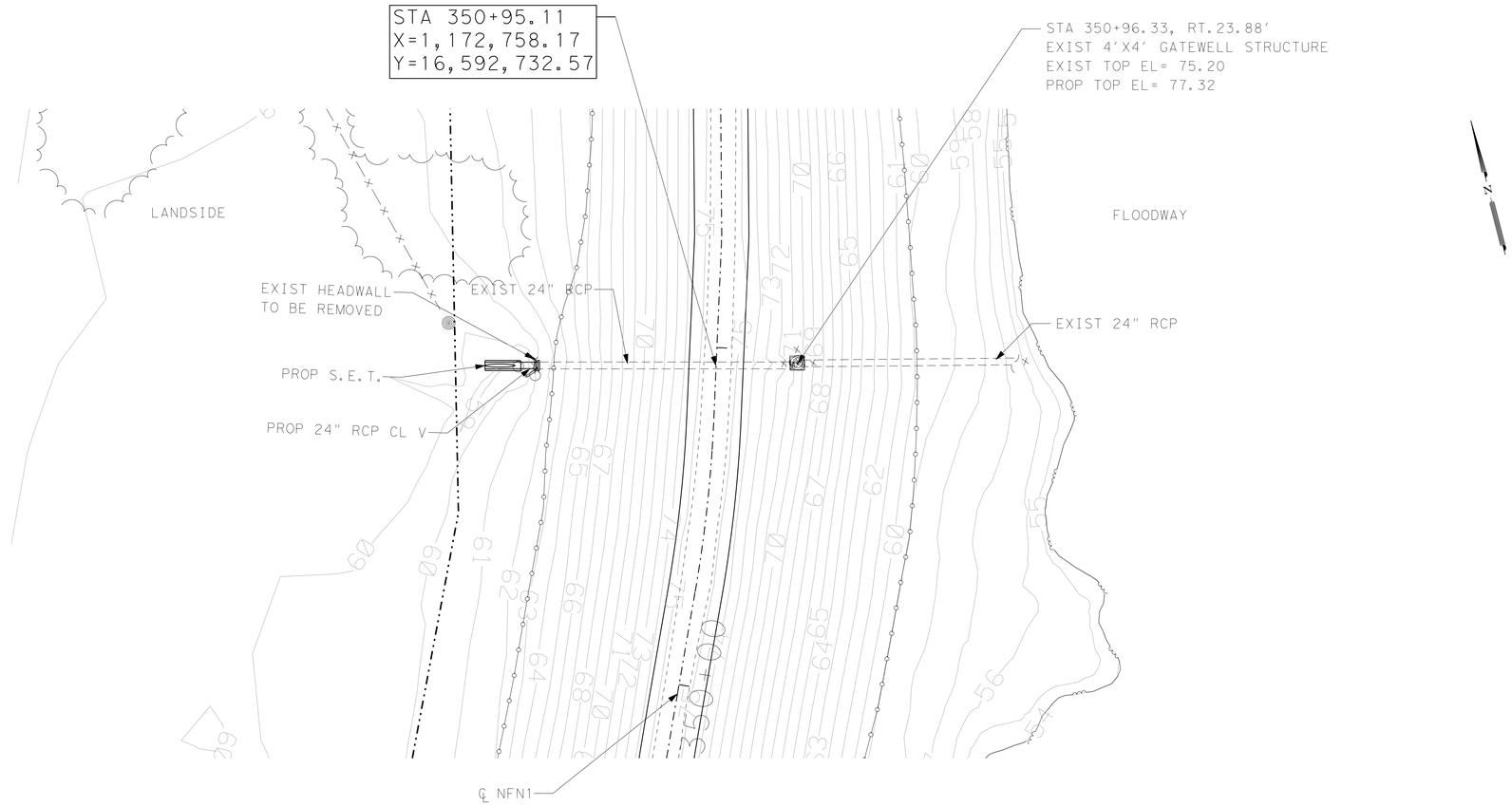

STRUCTURE TYPE:
DRAINAGE

SCALE H: 1"=20'
V: 1"=10'

PLAN VIEW LEGEND

- PROP CENTERLINE
- EXIST RIGHT-OF-WAY
- EXIST GEOTECHNICAL BORE
- EXIST FLOODWALL
- EL-OH — EXIST OVERHEAD UTILITY LINE
- EXIST SIGN
- 101 — EXIST CONTOURS
- EXIST LEVEE TOE
- F/O — EXIST FIBER OPTIC LINE
- GAS — EXIST GAS LINE
- W — EXIST WATER LINE
- T — EXIST TELEPHONE LINE
- X — EXIST FENCE
- PROP SEDIMENT CONTROL FENCE
- WATER BOUNDARY
- PROP LEVEE MAINTENANCE ROAD

NOTES:

1. CULVERT INFORMATION TAKEN FROM AS BUILT PROVIDED BY IBWC IF AVAILABLE.
2. CULVERTS WERE NOT CHECKED FOR HYDRAULICS ADEQUACY UNDER THIS TASK ORDER.
3. FOR GATEWELL ADJUSTMENT REFER TO SHEETS 12.58 & 12.59.
4. FOR CULVERT EXTENSION REFER TO SHEETS 12.60, & 12.61.
5. FOR CURB EXTENSION REFER TO SHEET 12.57.

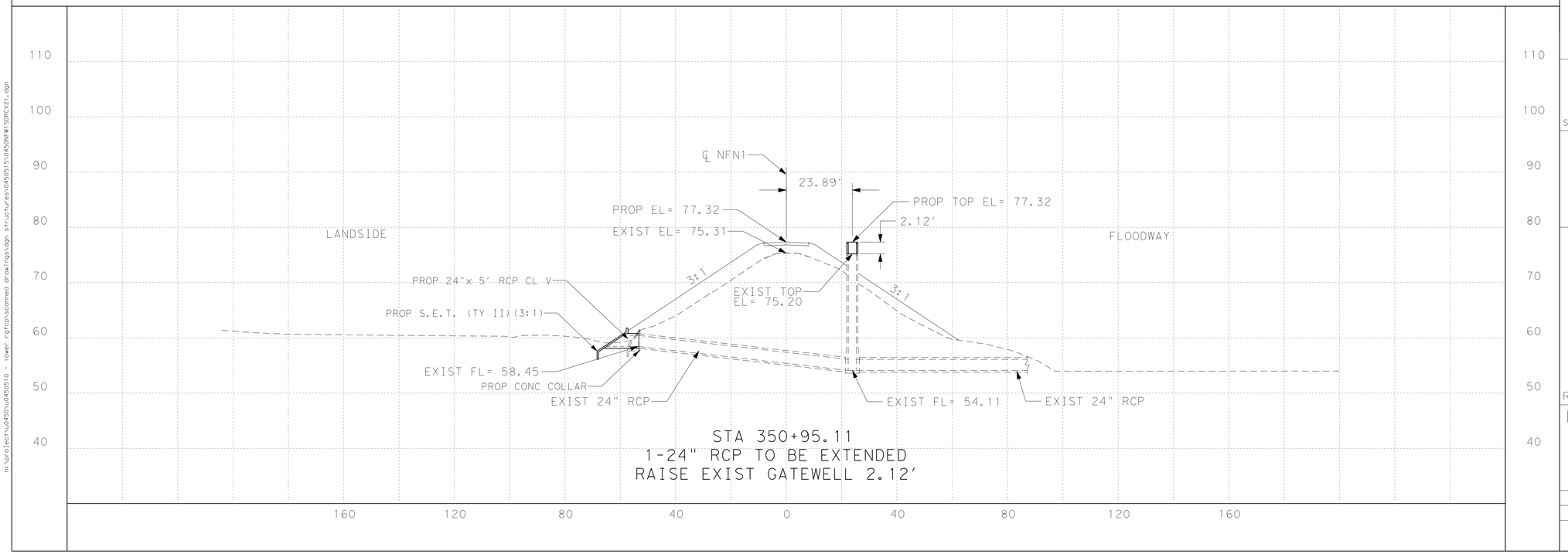

STA 350+95.11
1-24" RCP TO BE EXTENDED
RAISE EXIST GATEWELL 2.12'

INTERNATIONAL BOUNDARY AND WATER COMMISSION
COMISION INTERNACIONAL DE LIMITES Y AGUAS

S&B INFRASTRUCTURE, LTD.
Engineering Management Technology
S&B Infrastructure, Ltd. Firm Registration Number: 1582

DL, INC.
DOS LOGISTICS, INC.
212 W. 3rd Sreet
Weslaco, Tx. 78596
Phone: (956) 968-8800
Fax: (956) 447-8194
Dos Logistics, Inc. Firm Registration Number: F-9225

STATE OF TEXAS
JOSE G. REYES JR.
93827
LICENSED
PROFESSIONAL ENGINEER

The seal appearing on this document was authorized by JOSE G. REYES JR. P.E. 93827 on JUL 29 20 09

P.E.

REVISED 07/29/2009

NORTH FLOODWAY NORTH LEVEE (NFN1)
STRUCTURE NO. 132
STA 350+95.11

SHEET 21 OF 50

STATE	COUNTY	DRAWN BY:	CHECKED BY:	
TEXAS	HIDALGO	PROJECT NO.	IBM09T0018	SHEET NO.
REHABILITATION OF NORTH FLOODWAY NORTH AND SOUTH LEVEES (FM 1015 TO BASELINE RD)				12.25

n:\project\p450\p450510 - lower rgfcp\scanned drawings\dgn structures\p450515\p450NFW1SDRCV21.dgn

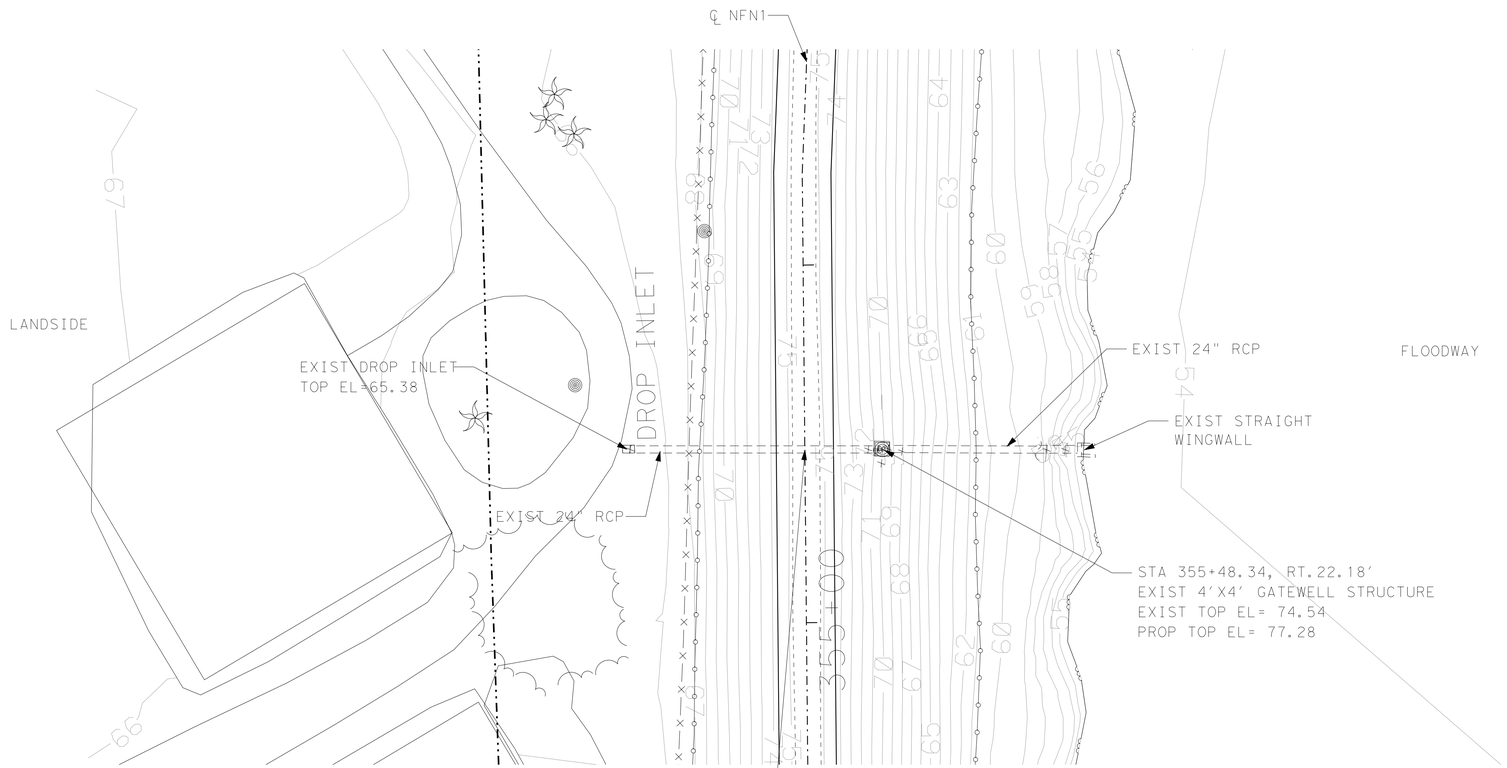

STRUCTURE TYPE:
DRAINAGE

SCALE H: 1"=20'
V: 1"=10'

PLAN VIEW LEGEND

- PROP CENTERLINE
- EXIST RIGHT-OF-WAY
- EXIST GEOTECHNICAL BORE
- EXIST FLOODWALL
- EL-OH — EXIST OVERHEAD UTILITY LINE
- EXIST SIGN
- 101 — EXIST CONTOURS
- EXIST LEVEE TOE
- F/O — EXIST FIBER OPTIC LINE
- GAS — EXIST GAS LINE
- W — EXIST WATER LINE
- T — EXIST TELEPHONE LINE
- X — EXIST FENCE
- PROP SEDIMENT CONTROL FENCE
- WATER BOUNDARY
- PROP LEVEE MAINTENANCE ROAD

NOTES:

1. CULVERT INFORMATION TAKEN FROM AS BUILT PROVIDED BY IBWC IF AVAILABLE.
2. CULVERTS WERE NOT CHECKED FOR HYDRAULICS ADEQUACY UNDER THIS TASK ORDER.
3. FOR GATEWELL ADJUSTMENT REFER TO SHEETS 12.58 & 12.59.
4. FOR CULVERT EXTENSION REFER TO SHEETS 12.60, & 12.61.
5. FOR CURB EXTENSION REFER TO SHEET 12.57.

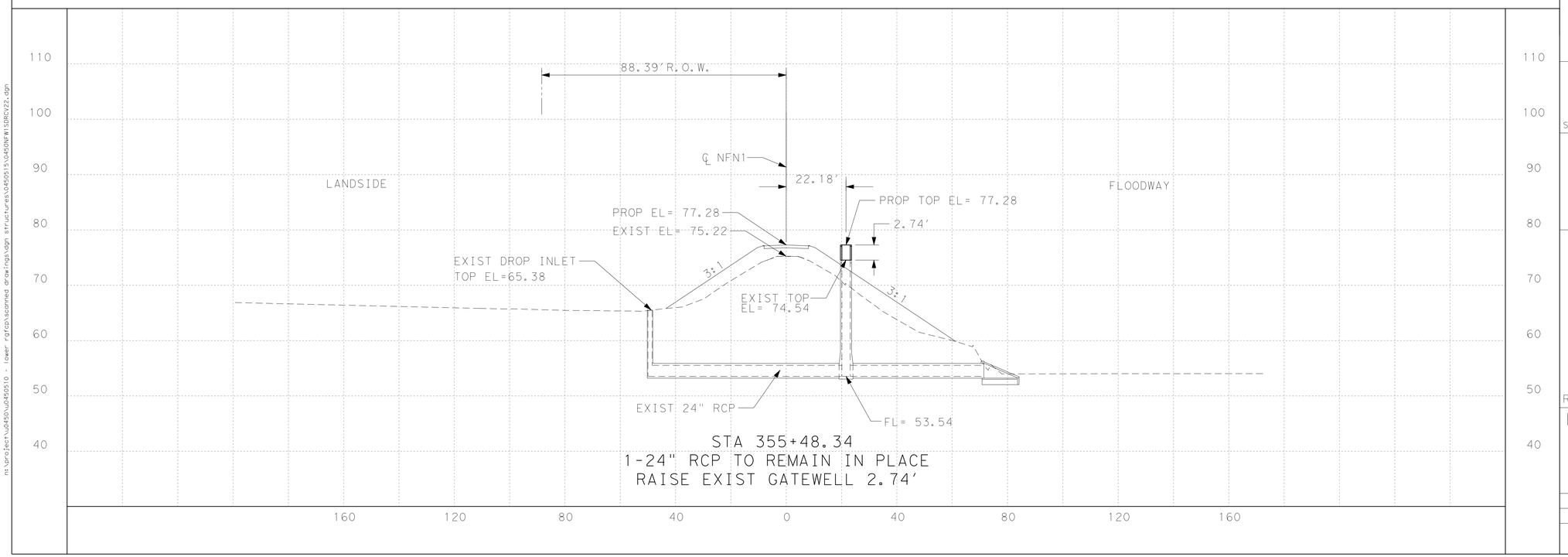

S&B INFRASTRUCTURE, LTD.
Engineering Management Technology
S&B Infrastructure, Ltd. Firm Registration Number: 1582

DL, INC.
DOS LOGISTICS, INC.
212 W. 3rd Sreet Phone: (956) 968-8800
Weslaco, Tx. 78596 Fax: (956) 447-8194
Dos Logistics, Inc. Firm Registration Number: F-9225

STATE OF TEXAS
JOSE G. REYES JR.
93827
LICENSED
PROFESSIONAL ENGINEER

The seal appearing on this document was authorized by JOSE G. REYES JR. P.E. 93827 on JUL 29 20 09

REVISED 07/29/2009

NORTH FLOODWAY NORTH LEVEE (NFN1)
STRUCTURE NO. 133
STA 355+48.34

SHEET 22 OF 50

STATE	COUNTY	DRAWN BY:	CHECKED BY:	
TEXAS	HIDALGO	PROJECT NO.	IBM09T0018	SHEET NO.
REHABILITATION OF NORTH FLOODWAY NORTH AND SOUTH LEVEES (FM 1015 TO BASELINE RD)				12.26

n:\project\p450\p450510 - lower rgfcp\scanned drawings\dgn structures\045015\p450NFWISDRCV22.dgn

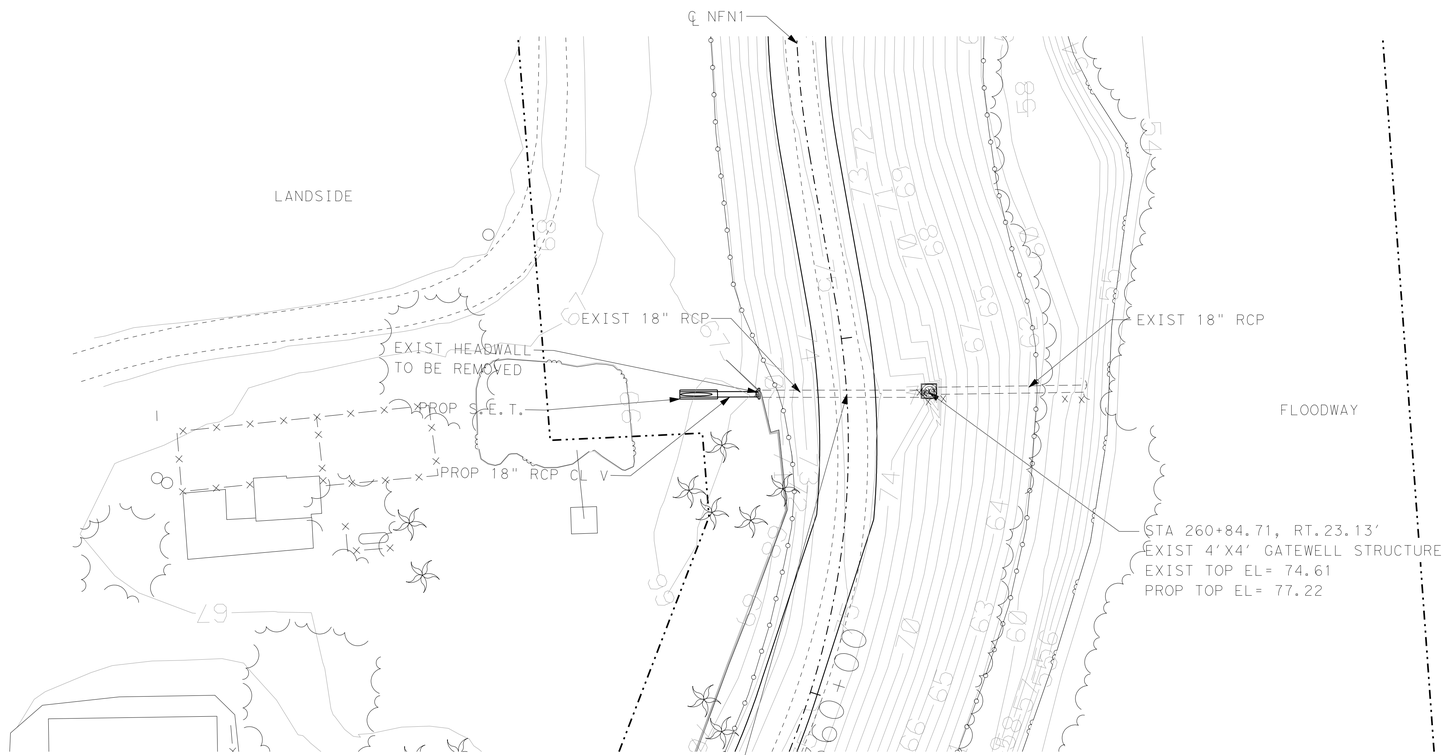

STRUCTURE TYPE:
DRAINAGE

STA 360+84.71
X=1,173,195.94
Y=16,593,605.46

SCALE H: 1"=20'
V: 1"=10'

PLAN VIEW LEGEND

- PROP CENTERLINE
- EXIST RIGHT-OF-WAY
- EXIST GEOTECHNICAL BORE
- EXIST FLOODWALL
- EL-OH — EXIST OVERHEAD UTILITY LINE
- EXIST SIGN
- 101 — EXIST CONTOURS
- EXIST LEVEE TOE
- F/O — EXIST FIBER OPTIC LINE
- GAS — EXIST GAS LINE
- W — EXIST WATER LINE
- T — EXIST TELEPHONE LINE
- X — EXIST FENCE
- PROP SEDIMENT CONTROL FENCE
- WATER BOUNDARY
- PROP LEVEE MAINTENANCE ROAD

NOTES:

1. CULVERT INFORMATION TAKEN FROM AS BUILT PROVIDED BY IBWC IF AVAILABLE.
2. CULVERTS WERE NOT CHECKED FOR HYDRAULICS ADEQUACY UNDER THIS TASK ORDER.
3. FOR GATEWELL ADJUSTMENT REFER TO SHEETS 12.58 & 12.59.
4. FOR CULVERT EXTENSION REFER TO SHEETS 12.60, & 12.61.
5. FOR CURB EXTENSION REFER TO SHEET 12.57.

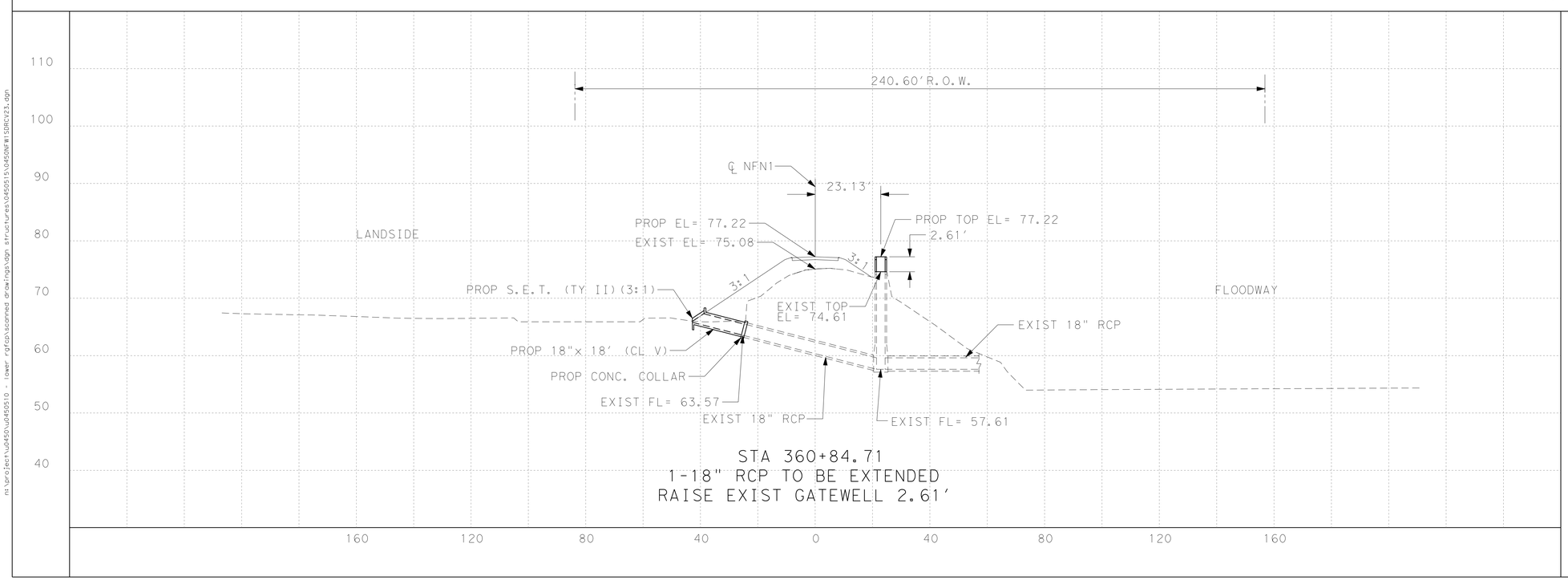

STA 360+84.71
1-18" RCP TO BE EXTENDED
RAISE EXIST GATEWELL 2.61'

S&B INFRASTRUCTURE, LTD.
Engineering Management Technology
S&B Infrastructure, Ltd. Firm Registration Number: 1582

DL, INC.
DOS LOGISTICS, INC.
212 W. 3rd Sreet
Weslaco, Tx. 78596
Phone: (956) 968-8800
Fax: (956) 447-8194
Dos Logistics, Inc. Firm Registration Number: F-9225

STATE OF TEXAS
JOSE G. REYES JR.
93827
LICENSED
PROFESSIONAL ENGINEER

The seal appearing on this document was authorized by JOSE G. REYES JR. P.E. 93827 on JUL 29 20 09

REVISED 07/29/2009

NORTH FLOODWAY NORTH LEVEE (NFN1) STRUCTURE NO. 134 STA 360+84.71

SHEET 23 OF 50

STATE	COUNTY	DRAWN BY:	CHECKED BY:	
TEXAS	HIDALGO	PROJECT NO.	IBM09T0018	SHEET NO.
REHABILITATION OF NORTH FLOODWAY NORTH AND SOUTH LEVEES (FM 1015 TO BASELINE RD)				12.27

n:\project\p450\p450510 - lower rgfcp\scanned drawings\dgn structures\0450515\0450NFWISDRCV23.dgn

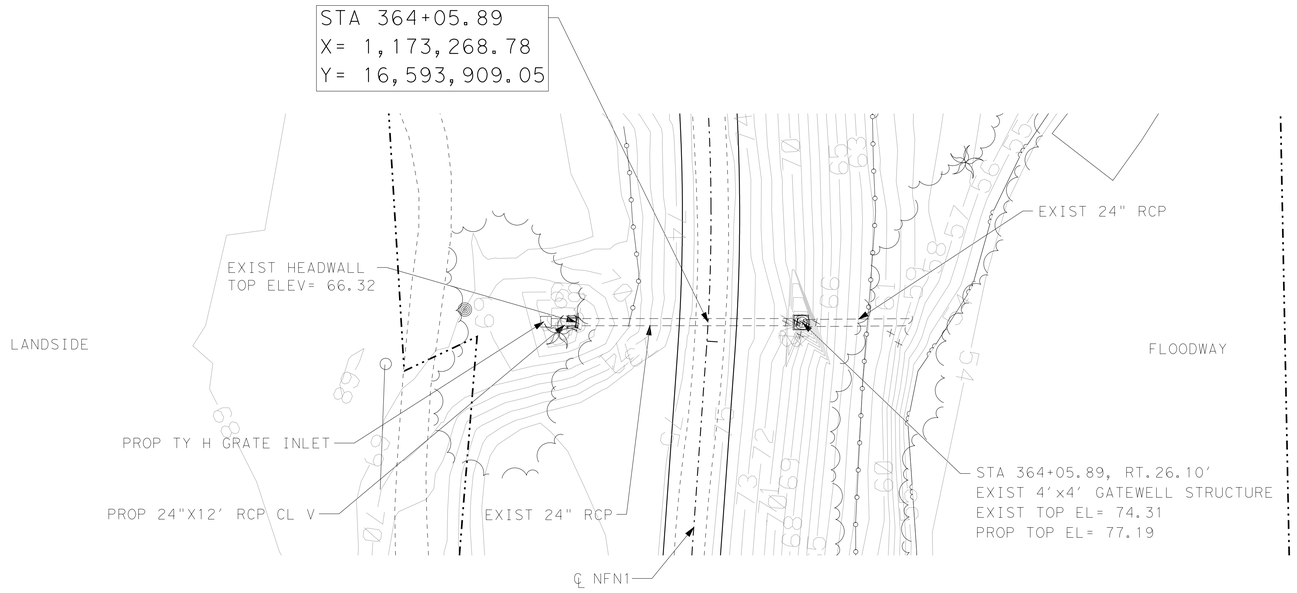

PLAN VIEW LEGEND

- PROP CENTERLINE
- EXIST RIGHT-OF-WAY
- EXIST GEOTECHNICAL BORE
- EXIST FLOODWALL
- EL-OH — EXIST OVERHEAD UTILITY LINE
- EXIST SIGN
- 101 — EXIST CONTOURS
- EXIST LEVEE TOE
- F/O — EXIST FIBER OPTIC LINE
- GAS — EXIST GAS LINE
- W — EXIST WATER LINE
- T — EXIST TELEPHONE LINE
- X — X — EXIST FENCE
- PROP SEDIMENT CONTROL FENCE
- WATER BOUNDARY
- PROP LEVEE MAINTENANCE ROAD

NOTES:

1. CULVERT INFORMATION TAKEN FROM AS BUILT PROVIDED BY IBWC IF AVAILABLE.
2. CULVERTS WERE NOT CHECKED FOR HYDRAULICS ADEQUACY UNDER THIS TASK ORDER.
3. FOR GATEWELL ADJUSTMENT REFER TO SHEETS 12.58 & 12.59.
4. FOR CULVERT EXTENSION REFER TO SHEETS 12.60, & 12.61.
5. FOR CURB EXTENSION REFER TO SHEET 12.57.

STRUCTURE TYPE:
DRAINAGE

SCALE H: 1"=20'
V: 1"=10'

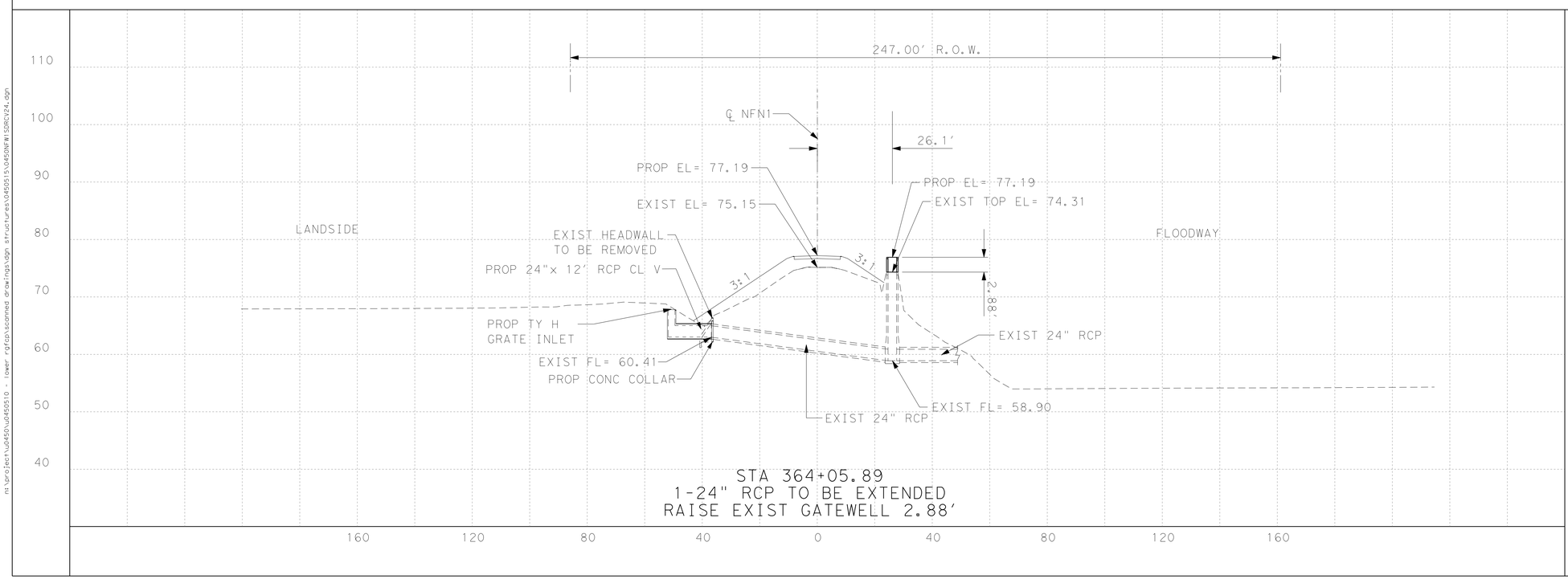

INTERNATIONAL BOUNDARY AND WATER COMMISSION
COMISIÓN INTERNACIONAL DE LIMITES Y AGUAS

S&B INFRASTRUCTURE, LTD.
Engineering Management Technology
S&B Infrastructure, Ltd. Firm Registration Number: 1582

DL, INC.
DOS LOGISTICS, INC.
212 W. 3rd Sreet
Weslaco, Tx. 78596
Phone: (956) 968-8800
Fax: (956) 447-8194
Dos Logistics, Inc. Firm Registration Number: F-9225

STATE OF TEXAS
JOSE G. REYES JR.
93827
LICENSED
PROFESSIONAL ENGINEER

The seal appearing on this document was authorized by JOSE G. REYES JR. P.E. 93827 on JUL. 29 20 09

REVISED 07/29/2009

NORTH FLOODWAY NORTH LEVEE (NFN1)
STRUCTURE NO. 135
STA 364+05.89

SHEET 24 OF 50

STATE	COUNTY	DRAWN BY:	CHECKED BY:	
TEXAS	HIDALGO	PROJECT NO. IBM09T0018		SHEET NO.
REHABILITATION OF NORTH FLOODWAY NORTH AND SOUTH LEVEES (FM 1015 TO BASELINE RD)				12.28

n:\project\u0450\u0450510 - lower rgfcp\scanned drawings\dgn structures\0450515\0450NFW15DRCV24.dgn

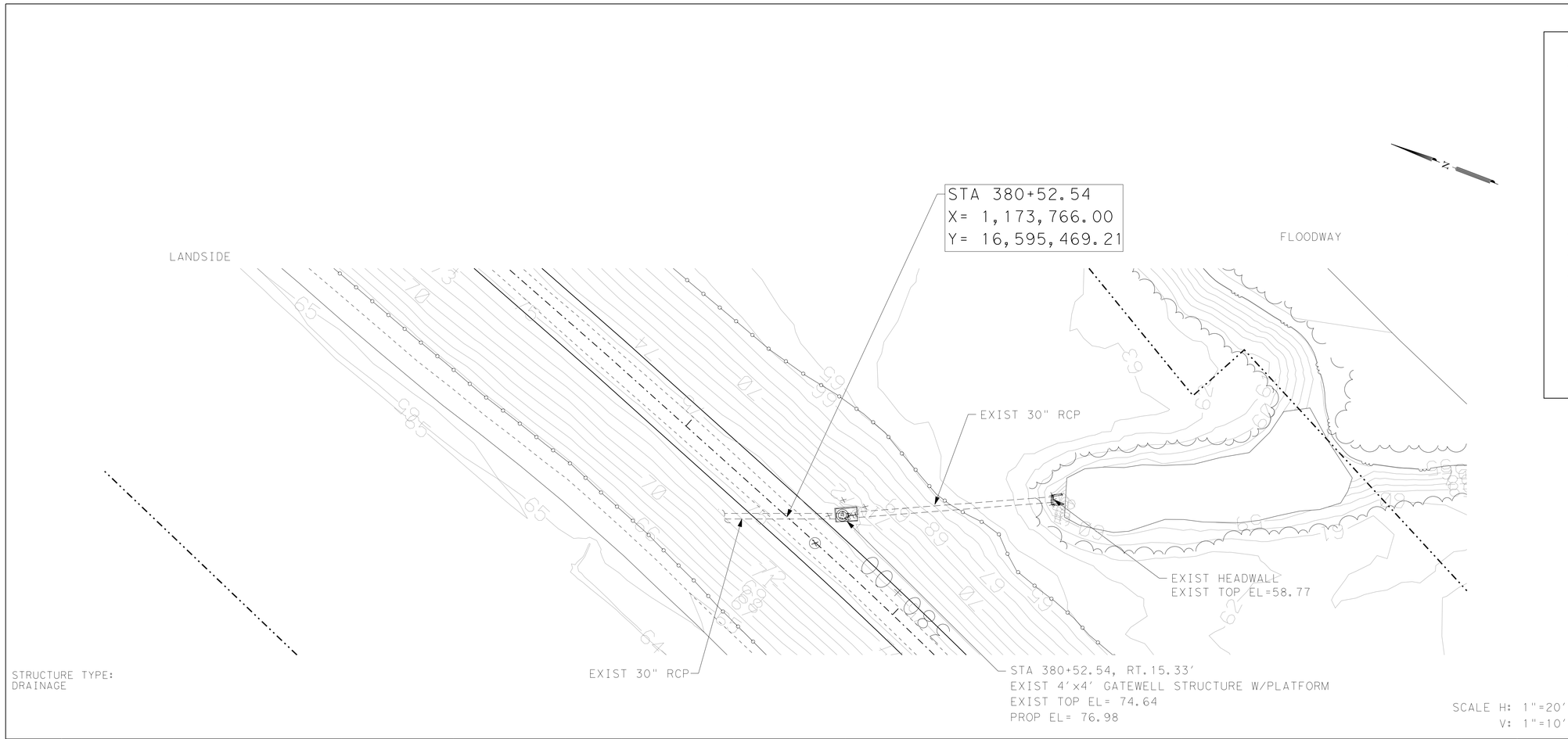

STRUCTURE TYPE:
DRAINAGE

SCALE H: 1"=20'
V: 1"=10'

PLAN VIEW LEGEND

- PROP CENTERLINE
- EXIST RIGHT-OF-WAY
- EXIST GEOTECHNICAL BORE
- EXIST FLOODWALL
- EL-OH — EXIST OVERHEAD UTILITY LINE
- EXIST SIGN
- 101 — EXIST CONTOURS
- EXIST LEVEE TOE
- F/O — EXIST FIBER OPTIC LINE
- GAS — EXIST GAS LINE
- W — EXIST WATER LINE
- T — EXIST TELEPHONE LINE
- X — EXIST FENCE
- PROP SEDIMENT CONTROL FENCE
- WATER BOUNDARY
- PROP LEVEE MAINTENANCE ROAD

NOTES:

1. CULVERT INFORMATION TAKEN FROM AS BUILT PROVIDED BY IBWC IF AVAILABLE.
2. CULVERTS WERE NOT CHECKED FOR HYDRAULICS ADEQUACY UNDER THIS TASK ORDER.
3. FOR GATEWELL ADJUSTMENT REFER TO SHEETS 12.58 & 12.59.
4. FOR CULVERT EXTENSION REFER TO SHEETS 12.60, & 12.61.
5. FOR CURB EXTENSION REFER TO SHEET 12.57.

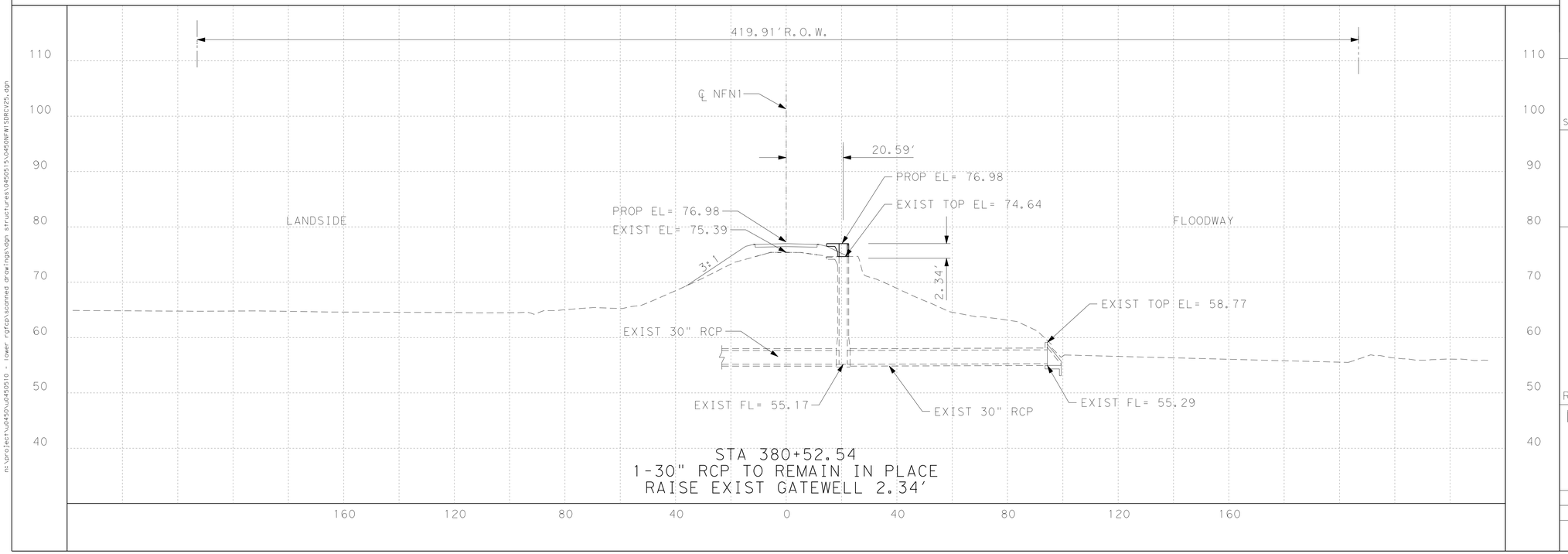

STA 380+52.54
1-30" RCP TO REMAIN IN PLACE
RAISE EXIST GATEWELL 2.34'

S&B INFRASTRUCTURE, LTD.
Engineering Management Technology
S&B Infrastructure, Ltd. Firm Registration Number: 1582

DL, INC.
DOS LOGISTICS, INC.
212 W. 3rd Sreet Phone: (956) 968-8800
Weslaco, Tx. 78596 Fax: (956) 447-8194
Dos Logistics, Inc. Firm Registration Number: F-9225

STATE OF TEXAS
JOSE G. REYES JR.
93827
LICENSED PROFESSIONAL ENGINEER

The seal appearing on this document was authorized by JOSE G. REYES JR. P.E. 93827 on JUL. 29, 2009

REVISED 07/29/2009

NORTH FLOODWAY NORTH LEVEE
(NFN1)
STRUCTURE NO. 136
STA 380+52.54

SHEET 25 OF 50

STATE	COUNTY	DRAWN BY:	CHECKED BY:	
TEXAS	HIDALGO	PROJECT NO.	IBM09T0018	SHEET NO.

REHABILITATION OF NORTH FLOODWAY
NORTH AND SOUTH LEVEES
(FM 1015 TO BASELINE RD)

12.29

n:\project\u0450\u0450510 - lower rgfcp\scanned drawings\dgn structures\0450515\0450NFW1SDRCV25.dgn

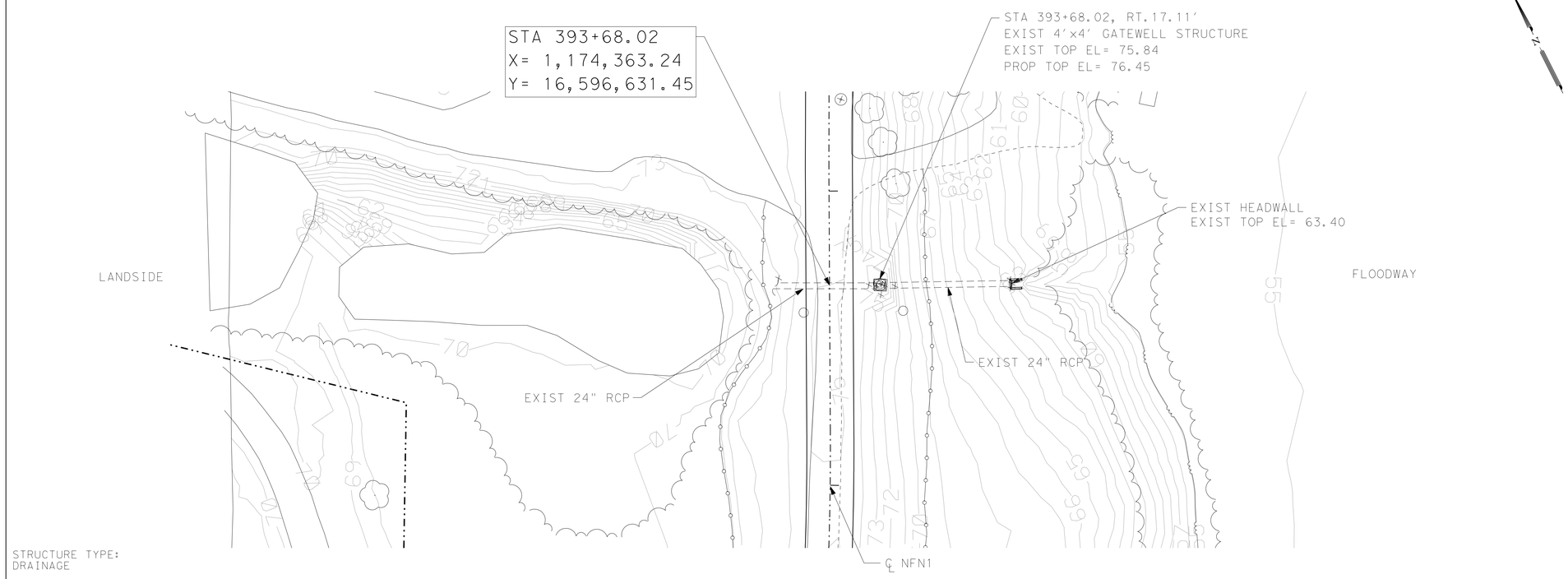

STRUCTURE TYPE:
DRAINAGE

SCALE H: 1"=20'
V: 1"=10'

PLAN VIEW LEGEND

- PROP CENTERLINE
- EXIST RIGHT-OF-WAY
- EXIST GEOTECHNICAL BORE
- EXIST FLOODWALL
- EL-OH — EXIST OVERHEAD UTILITY LINE
- EXIST SIGN
- 101 — EXIST CONTOURS
- EXIST LEVEE TOE
- F/O — EXIST FIBER OPTIC LINE
- GAS — EXIST GAS LINE
- W — EXIST WATER LINE
- T — EXIST TELEPHONE LINE
- X — X — EXIST FENCE
- PROP SEDIMENT CONTROL FENCE
- WATER BOUNDARY
- PROP LEVEE MAINTENANCE ROAD

NOTES:

1. CULVERT INFORMATION TAKEN FROM AS BUILT PROVIDED BY IBWC IF AVAILABLE.
2. CULVERTS WERE NOT CHECKED FOR HYDRAULICS ADEQUACY UNDER THIS TASK ORDER.
3. FOR GATEWELL ADJUSTMENT REFER TO SHEETS 12.58 & 12.59.
4. FOR CULVERT EXTENSION REFER TO SHEETS 12.60, & 12.61.
5. FOR CURB EXTENSION REFER TO SHEET 12.57.

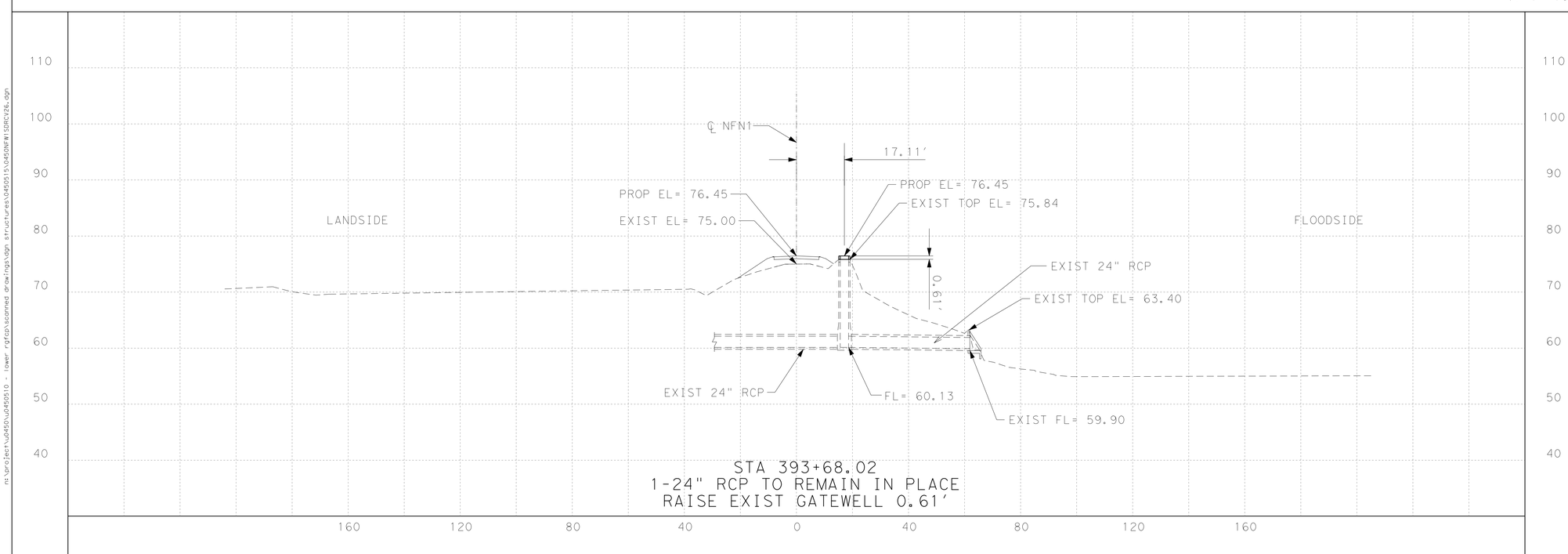

S&B INFRASTRUCTURE, LTD.
Engineering Management Technology
S&B Infrastructure, Ltd. Firm Registration Number: 1582

DL, INC.
DOS LOGISTICS, INC.
212 W. 3rd Sreet
Weslaco, Tx. 78596
Phone: (956) 968-8800
Fax: (956) 447-8194
Dos Logistics, Inc. Firm Registration Number: F-9225

STATE OF TEXAS
JOSE G. REYES JR.
93827
LICENSED
PROFESSIONAL ENGINEER

The seal appearing on this document was authorized by JOSE G. REYES JR. P.E. 93827 on JUL. 29 20 09

REVISED 07/29/2009

NORTH FLOODWAY NORTH LEVEE (NFN1)
STRUCTURE NO. 137A
STA 393+68.02

SHEET 26 OF 50

STATE	COUNTY	DRAWN BY:	CHECKED BY:	
TEXAS	HIDALGO	PROJECT NO. IBM09T0018		SHEET NO.
REHABILITATION OF NORTH FLOODWAY NORTH AND SOUTH LEVEES (FM 1015 TO BASELINE RD)				12.30

n:\project\u0450\u0450510 - lower rgfcp\scanned drawings\dgn structures\0450515\0450NFW15DRCV26.dgn

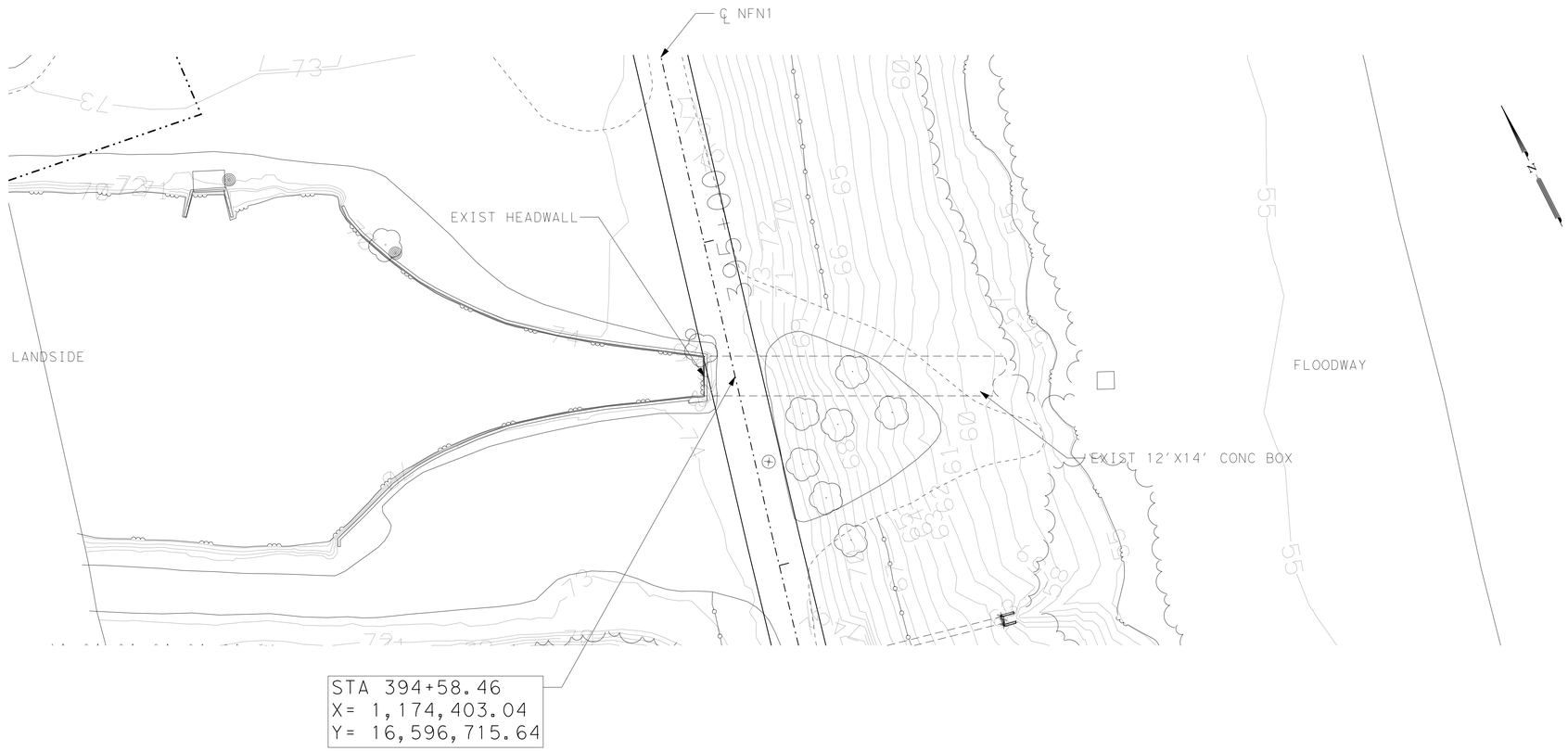

STRUCTURE TYPE:
IRRIGATION

SCALE H: 1"=20'
V: 1"=10'

PLAN VIEW LEGEND

- PROP CENTERLINE
- EXIST RIGHT-OF-WAY
- EXIST GEOTECHNICAL BORE
- EXIST FLOODWALL
- EL-OH — EXIST OVERHEAD UTILITY LINE
- EXIST SIGN
- 101 — EXIST CONTOURS
- EXIST LEVEE TOE
- F/O — EXIST FIBER OPTIC LINE
- GAS — EXIST GAS LINE
- W — EXIST WATER LINE
- T — EXIST TELEPHONE LINE
- X — X — EXIST FENCE
- PROP SEDIMENT CONTROL FENCE
- WATER BOUNDARY
- PROP LEVEE MAINTENANCE ROAD

NOTES:

1. CULVERT INFORMATION TAKEN FROM AS BUILT PROVIDED BY IBWC IF AVAILABLE.
2. CULVERTS WERE NOT CHECKED FOR HYDRAULICS ADEQUACY UNDER THIS TASK ORDER.
3. FOR GATEWELL ADJUSTMENT REFER TO SHEETS 12.58 & 12.59.
4. FOR CULVERT EXTENSION REFER TO SHEETS 12.60, & 12.61.
5. FOR CURB EXTENSION REFER TO SHEET 12.57.

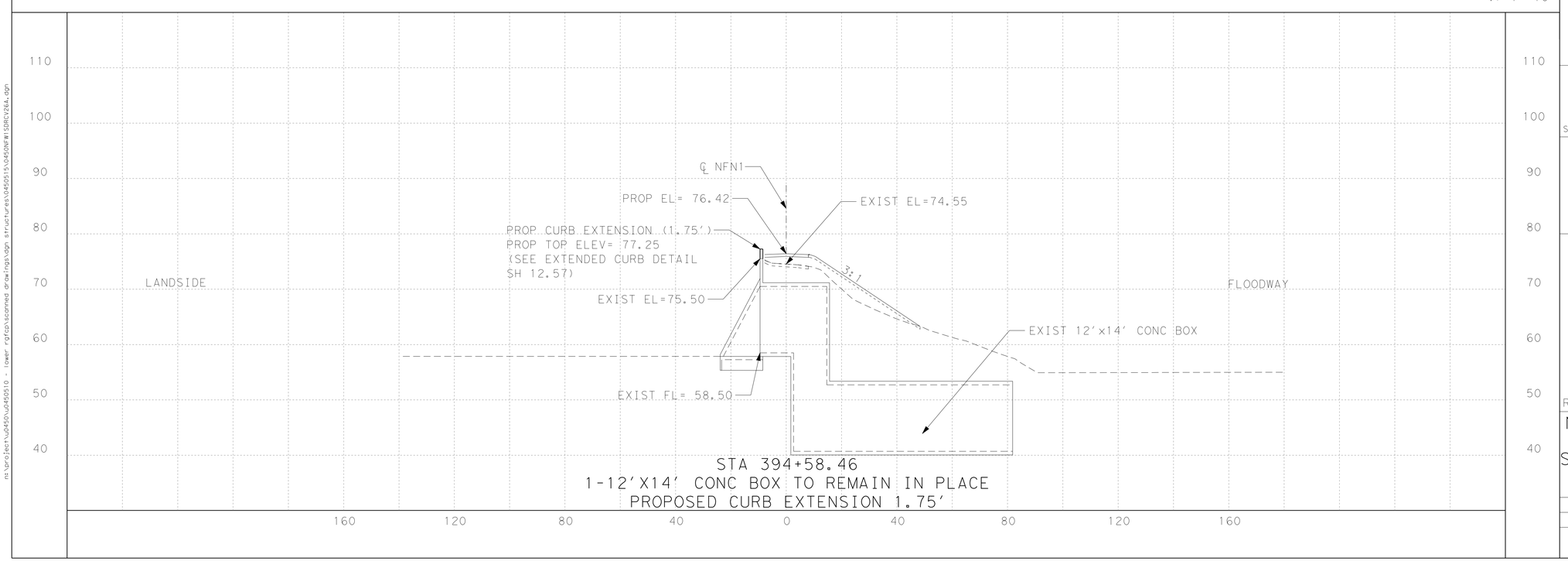

S&B INFRASTRUCTURE, LTD.
Engineering Management Technology
S&B Infrastructure, Ltd. Firm Registration Number: 1582

DL, INC.
DOS LOGISTICS, INC.
212 W. 3rd Sreet
Weslaco, Tx. 78596
Phone: (956) 968-8800
Fax: (956) 447-8194
Dos Logistics, Inc. Firm Registration Number: F-9225

STATE OF TEXAS
JOSE G. REYES JR.
93827
LICENSED
PROFESSIONAL ENGINEER

The seal appearing on this document was authorized by JOSE G. REYES JR. P.E. 93827 on JUL. 29 20 09

REVISED 07/29/2009

NORTH FLOODWAY NORTH LEVEE (NFN1)
STRUCTURE NO. BTWN 137A&138
STA 394+58.46

SHEET 27 OF 50

STATE	COUNTY	DRAWN BY:	CHECKED BY:	
TEXAS	HIDALGO	PROJECT NO. IBM09T0018		SHEET NO.
REHABILITATION OF NORTH FLOODWAY NORTH AND SOUTH LEVEES (FM 1015 TO BASELINE RD)				12.31

n:\project\u0450\u0450510 - lower rgfcp\scanned drawings\dgn structures\0450515\0450NFW15DRCV26A.dgn

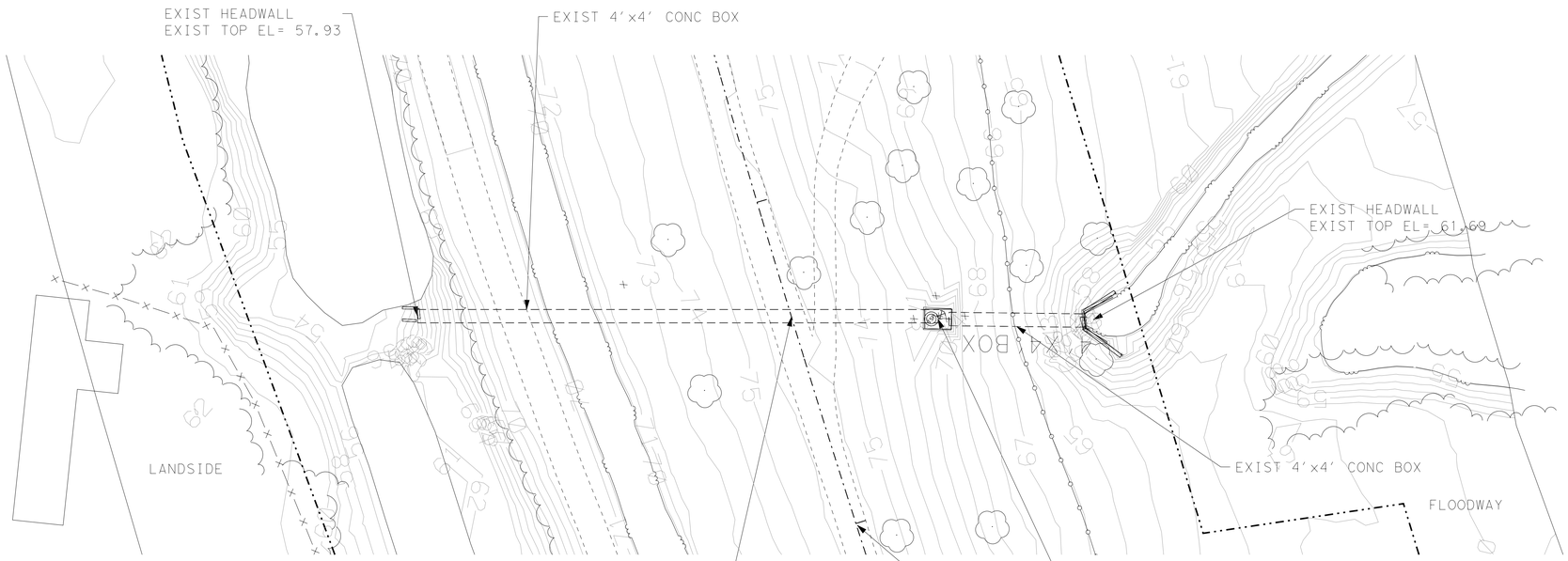

STRUCTURE TYPE:
DRAINAGE

SCALE H: 1"=20'
V: 1"=10'

PLAN VIEW LEGEND

- PROP CENTERLINE
- EXIST RIGHT-OF-WAY
- EXIST GEOTECHNICAL BORE
- EXIST FLOODWALL
- EL-OH — EXIST OVERHEAD UTILITY LINE
- EXIST SIGN
- 101 — EXIST CONTOURS
- EXIST LEVEE TOE
- F/O — EXIST FIBER OPTIC LINE
- GAS — EXIST GAS LINE
- W — EXIST WATER LINE
- T — EXIST TELEPHONE LINE
- X — EXIST FENCE
- PROP SEDIMENT CONTROL FENCE
- WATER BOUNDARY
- PROP LEVEE MAINTENANCE ROAD

NOTES:

1. CULVERT INFORMATION TAKEN FROM AS BUILT PROVIDED BY IBWC IF AVAILABLE.
2. CULVERTS WERE NOT CHECKED FOR HYDRAULICS ADEQUACY UNDER THIS TASK ORDER.
3. FOR GATEWELL ADJUSTMENT REFER TO SHEETS 12.58 & 12.59.
4. FOR CULVERT EXTENSION REFER TO SHEETS 12.60, & 12.61.
5. FOR CURB EXTENSION REFER TO SHEET 12.57.

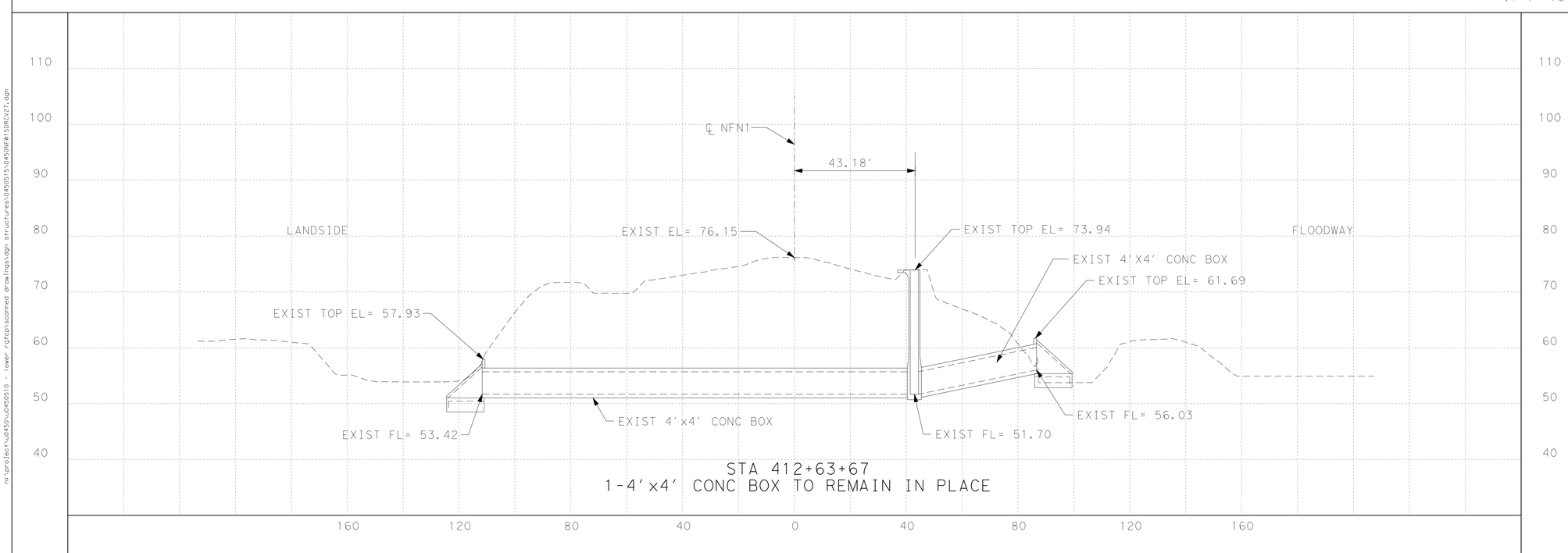

STA 412+63+67
1-4'x4' CONC BOX TO REMAIN IN PLACE

S&B INFRASTRUCTURE, LTD.
Engineering Management Technology
S&B Infrastructure, Ltd. Firm Registration Number: 1582

DL, INC.
DOS LOGISTICS, INC.
212 W. 3rd Sreet
Weslaco, Tx. 78596
Phone: (956) 968-8800
Fax: (956) 447-8194
Dos Logistics, Inc. Firm Registration Number: F-9225

STATE OF TEXAS
JOSE G. REYES JR.
93827
LICENSED PROFESSIONAL ENGINEER

The seal appearing on this document was authorized by JOSE G. REYES JR. P.E. 93827 on JUL. 29 20 09

REVISED 07/29/2009

NORTH FLOODWAY NORTH LEVEE
(NFN1)
STRUCTURE NO. 138
STA 412+63.67

SHEET 28 OF 50

STATE	COUNTY	DRAWN BY:	CHECKED BY:	
TEXAS	HIDALGO	PROJECT NO.	IBM09T0018	SHEET NO.
REHABILITATION OF NORTH FLOODWAY NORTH AND SOUTH LEVEES (FM 1015 TO BASELINE RD)				12.32

n:\project\0450\0450510 - lower rgfcp\scanned drawings\dgn structures\0450515\0450NFWISDRCV27.dgn

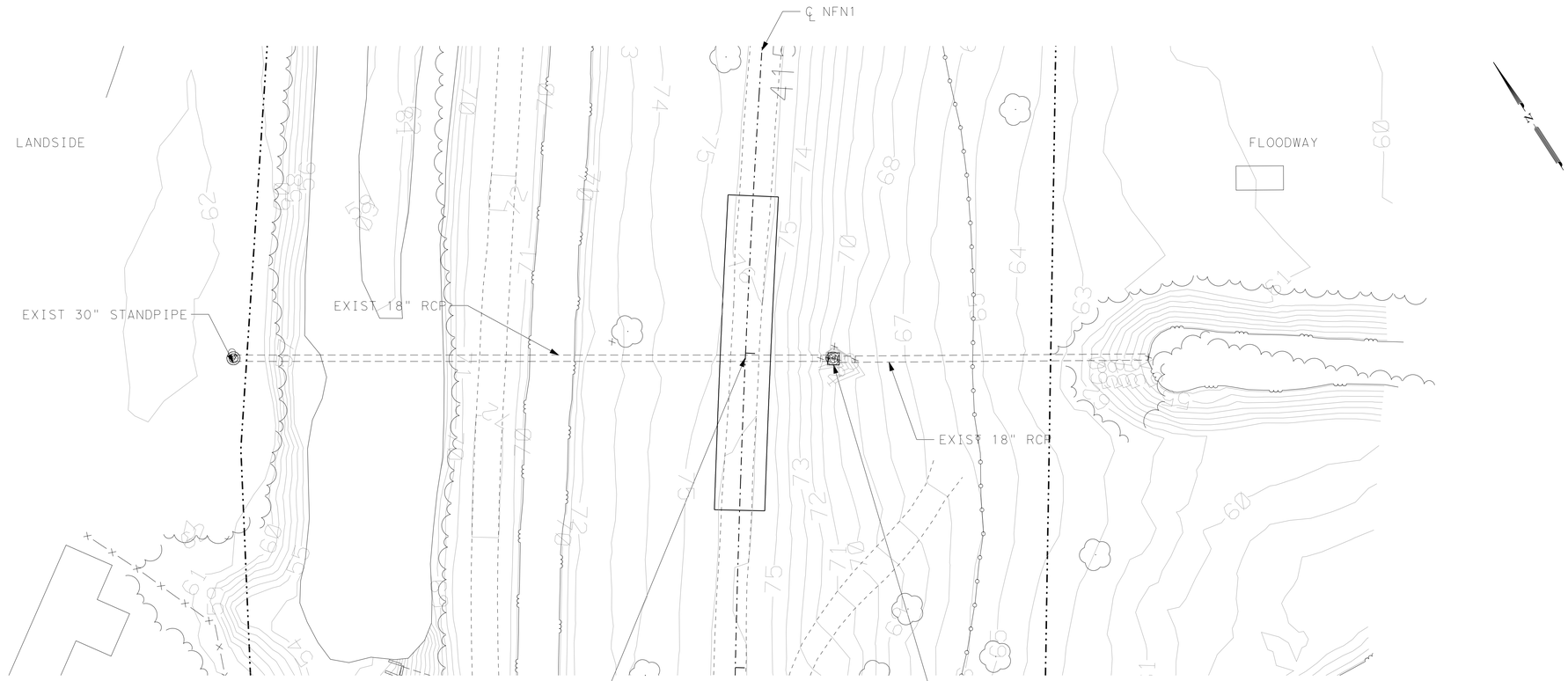

STRUCTURE TYPE:
DRAINAGE

OWNER:
CITY OF WESLACO
(OPERATED BY DISTRICT #9)

LICENSE No. :
LSF/G-288

SCALE H: 1"=20'
V: 1"=10'

PLAN VIEW LEGEND

- PROP CENTERLINE
- EXIST RIGHT-OF-WAY
- EXIST GEOTECHNICAL BORE
- EXIST FLOODWALL
- EL-OH — EXIST OVERHEAD UTILITY LINE
- EXIST SIGN
- 101 — EXIST CONTOURS
- EXIST LEVEE TOE
- F/O — EXIST FIBER OPTIC LINE
- GAS — EXIST GAS LINE
- W — EXIST WATER LINE
- T — EXIST TELEPHONE LINE
- X — X — EXIST FENCE
- PROP SEDIMENT CONTROL FENCE
- WATER BOUNDARY
- PROP LEVEE MAINTENANCE ROAD

NOTES:

1. CULVERT INFORMATION TAKEN FROM AS BUILT PROVIDED BY IBWC IF AVAILABLE.
2. CULVERTS WERE NOT CHECKED FOR HYDRAULICS ADEQUACY UNDER THIS TASK ORDER.
3. FOR GATEWELL ADJUSTMENT REFER TO SHEETS 12.58 & 12.59.
4. FOR CULVERT EXTENSION REFER TO SHEETS 12.60, & 12.61.
5. FOR CURB EXTENSION REFER TO SHEET 12.57.

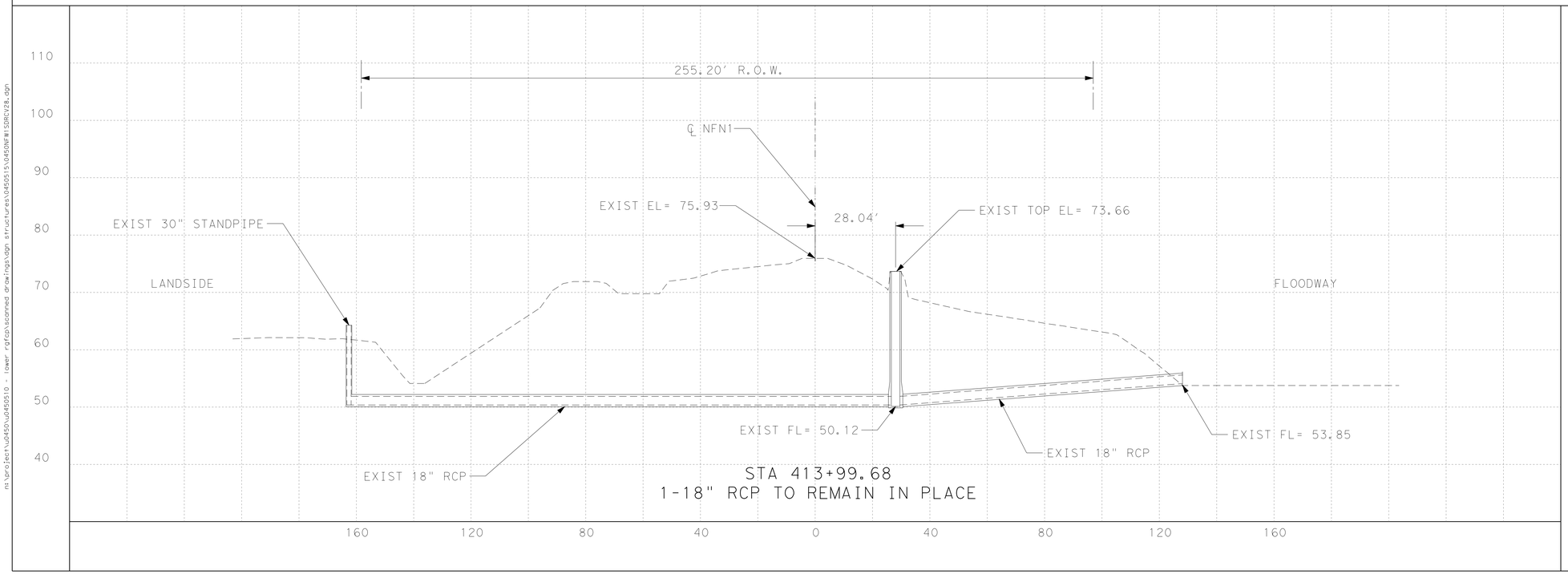

S&B INFRASTRUCTURE, LTD.
Engineering Management Technology
S&B Infrastructure, Ltd. Firm Registration Number: 1582

DL, INC.
DOS LOGISTICS, INC.
212 W. 3rd Sreet
Weslaco, Tx. 78596
Phone: (956) 968-8800
Fax: (956) 447-8194
Dos Logistics, Inc. Firm Registration Number: F-9225

STATE OF TEXAS
JOSE G. REYES JR.
93827
LICENSED PROFESSIONAL ENGINEER

The seal appearing on this document was authorized by JOSE G. REYES JR. P.E. 93827 on JUL. 29 20 09

REVISED 07/29/2009

NORTH FLOODWAY NORTH LEVEE (NFN1) STRUCTURE NO. 138L STA 413+99.68

SHEET 29 OF 50

STATE	COUNTY	DRAWN BY:	CHECKED BY:	
TEXAS	HIDALGO	PROJECT NO. IBM09T0018		SHEET NO.
REHABILITATION OF NORTH FLOODWAY NORTH AND SOUTH LEVEES (FM 1015 TO BASELINE RD)				12.33

n:\project\u0450\u0450510 - lower rgfcp\scanned drawings\dgn structures\0450515\0450NFWISDRCV28.dgn

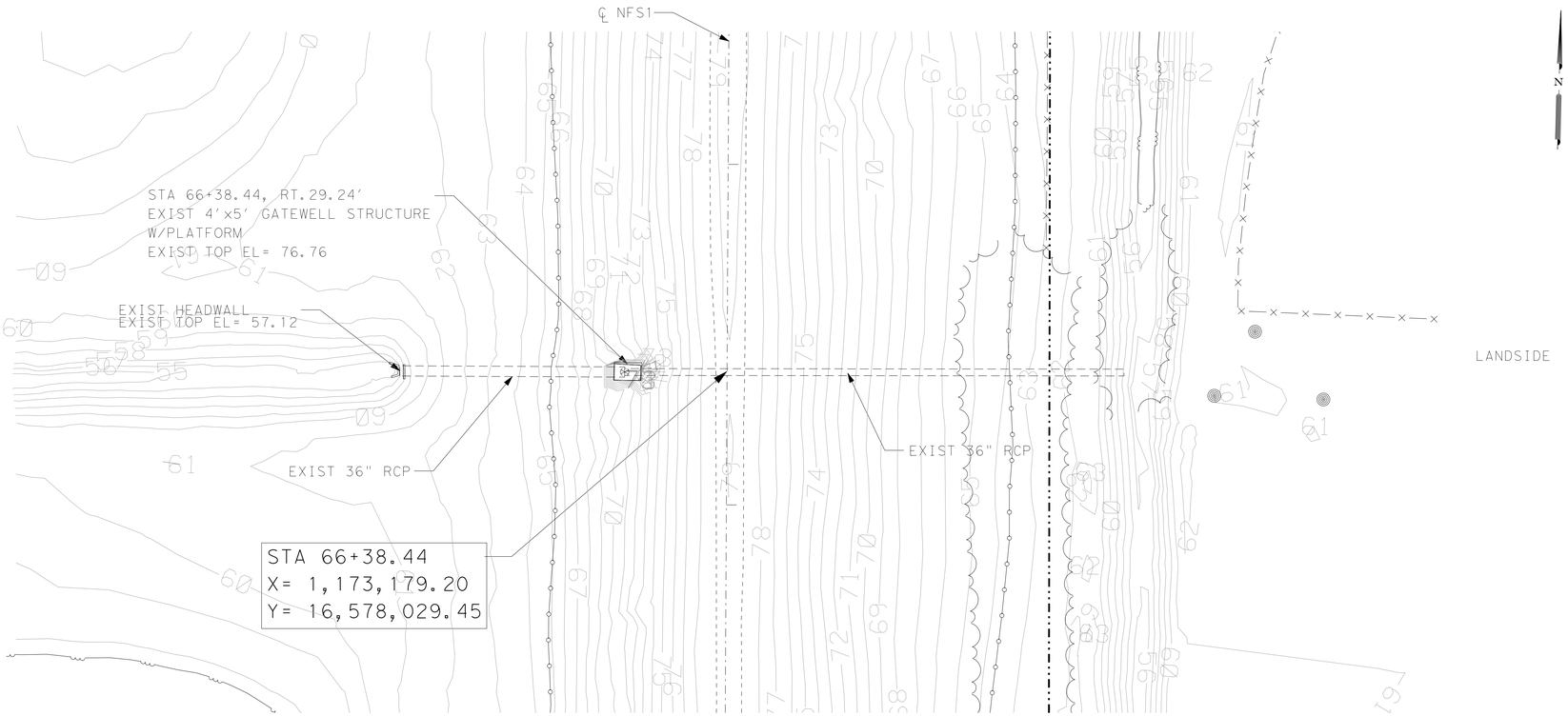

STRUCTURE TYPE:
DRAINAGE

OWNER:
CITY OF MERCEDES

LICENSE No.:
LSF/G-654

SCALE: H: 1"=20'
V: 1"=10'

PLAN VIEW LEGEND

- PROP CENTERLINE
- EXIST RIGHT-OF-WAY
- EXIST GEOTECHNICAL BORE
- EXIST FLOODWALL
- EL-OH — EXIST OVERHEAD UTILITY LINE
- EXIST SIGN
- 101 — EXIST CONTOURS
- EXIST LEVEE TOE
- F/O — EXIST FIBER OPTIC LINE
- GAS — EXIST GAS LINE
- W — EXIST WATER LINE
- T — EXIST TELEPHONE LINE
- EXIST FENCE
- PROP SEDIMENT CONTROL FENCE
- WATER BOUNDARY
- PROP LEVEE MAINTENANCE ROAD

NOTES:

1. CULVERT INFORMATION TAKEN FROM AS BUILT PROVIDED BY IBWC IF AVAILABLE.
2. CULVERTS WERE NOT CHECKED FOR HYDRAULICS ADEQUACY UNDER THIS TASK ORDER.
3. FOR GATEWELL ADJUSTMENT REFER TO SHEETS 12.58 & 12.59.
4. FOR CULVERT EXTENSION REFER TO SHEETS 12.60, & 12.61.
5. FOR CURB EXTENSION REFER TO SHEET 12.57.

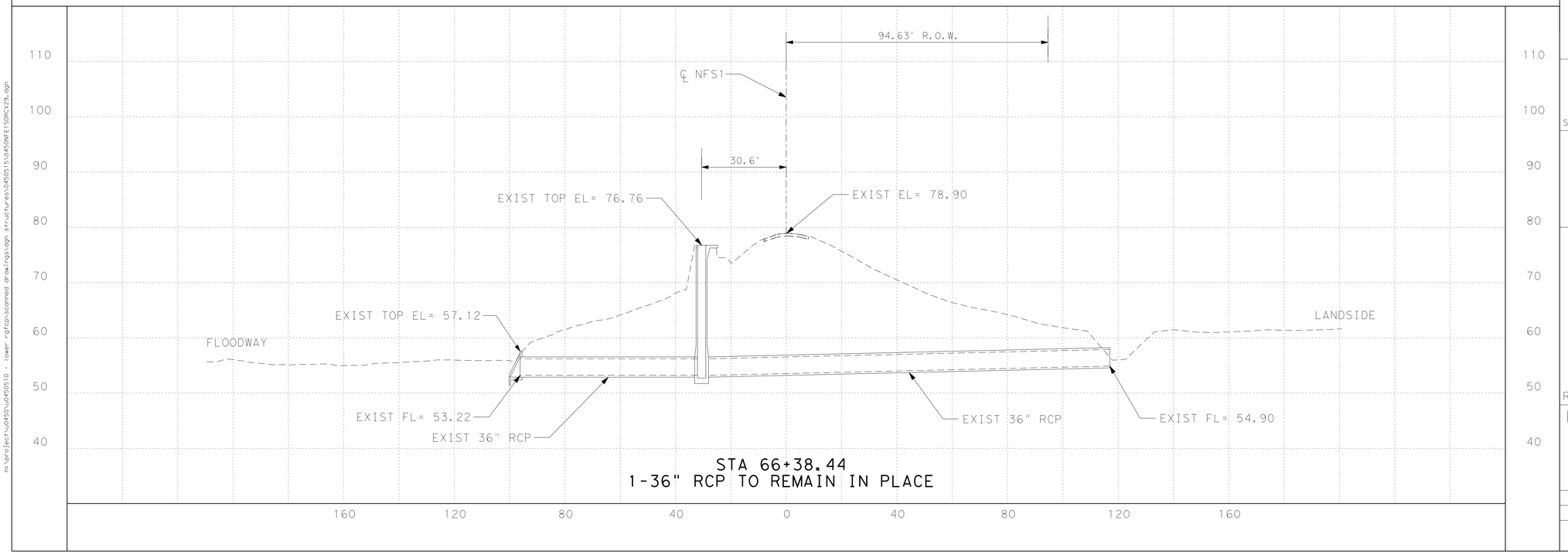

S&B INFRASTRUCTURE, LTD.
Engineering Management Technology
S&B Infrastructure, Ltd. Firm Registration Number: 1582

DL, INC.
DOS LOGISTICS, INC.
212 W. 3rd Sreet
Weslaco, Tx. 78596
Phone: (956) 968-8800
Fax: (956) 447-8194
Dos Logistics, Inc. Firm Registration Number: F-9225

STATE OF TEXAS
JOSE G. REYES JR.
93827
LICENSED PROFESSIONAL ENGINEER

The seal appearing on this document was authorized by JOSE G. REYES JR. P.E. 93827 on JUL. 29, 20 09

P.E.

REVISED 07/29/2009

NORTH FLOODWAY SOUTH LEVEE (NFS1)
STRUCTURE NO. 162L
STA 66+38.44

SHEET 30 OF 50

STATE	COUNTY	DRAWN BY:	CHECKED BY:	
TEXAS	HIDALGO	PROJECT NO.	IBM09T0018	SHEET NO.
REHABILITATION OF NORTH FLOODWAY NORTH AND SOUTH LEVEES (FM 1015 TO BASELINE RD)				12.34

m:\project\0450\0450510 - lower rgfcp\scanned drawings\dgn structures\0450515\0450NFE1SSRCV29.dgn

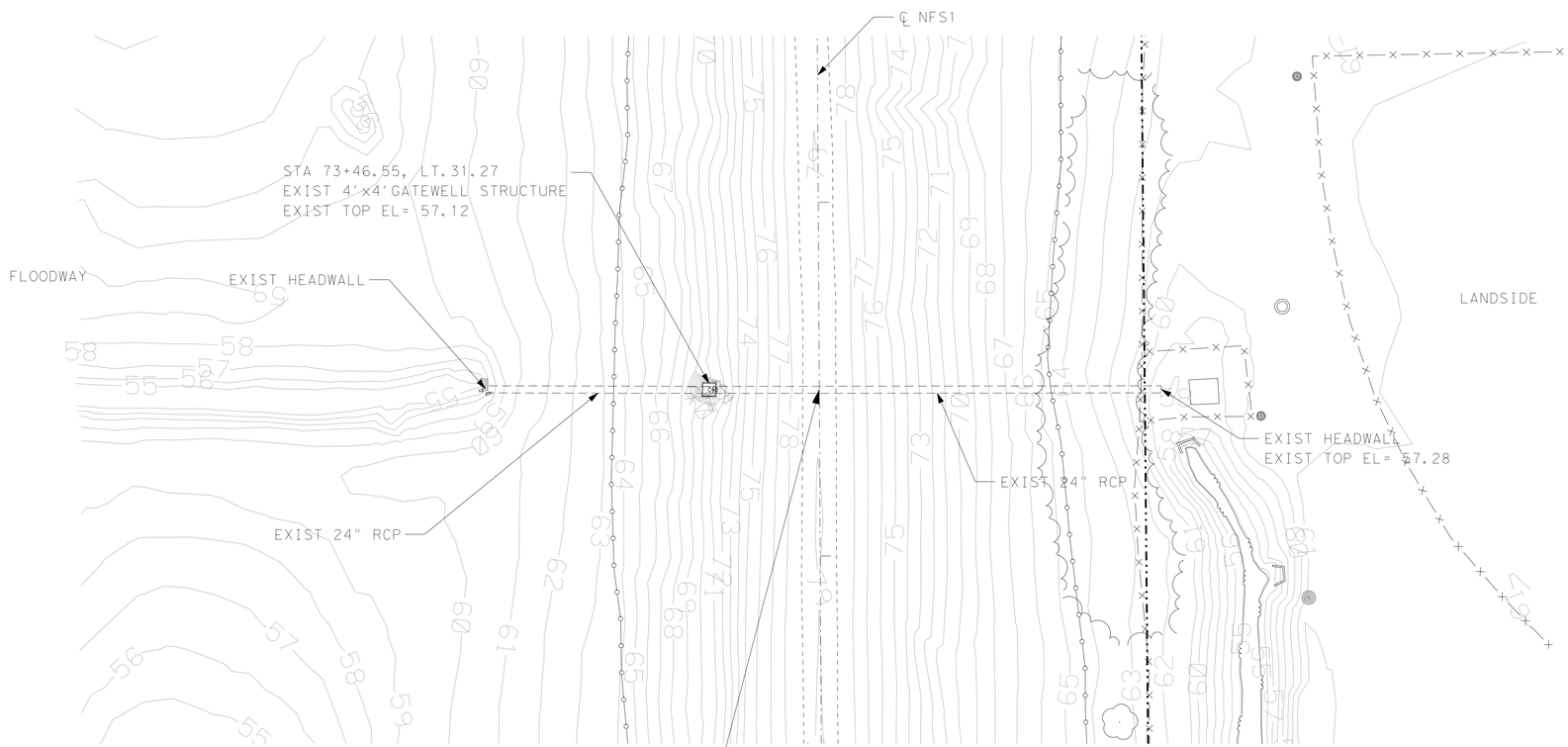

STRUCTURE TYPE:
DRAINAGE

SCALE: H: 1"=20'
V: 1"=10'

PLAN VIEW LEGEND

- PROP CENTERLINE
- EXIST RIGHT-OF-WAY
- EXIST GEOTECHNICAL BORE
- EXIST FLOODWALL
- EL-OH — EXIST OVERHEAD UTILITY LINE
- EXIST SIGN
- 101 — EXIST CONTOURS
- EXIST LEVEE TOE
- F/O — EXIST FIBER OPTIC LINE
- GAS — EXIST GAS LINE
- W — EXIST WATER LINE
- T — EXIST TELEPHONE LINE
- EXIST FENCE
- PROP SEDIMENT CONTROL FENCE
- WATER BOUNDARY
- PROP LEVEE MAINTENANCE ROAD

NOTES:

1. CULVERT INFORMATION TAKEN FROM AS BUILT PROVIDED BY IBWC IF AVAILABLE.
2. CULVERTS WERE NOT CHECKED FOR HYDRAULICS ADEQUACY UNDER THIS TASK ORDER.
3. FOR GATEWELL ADJUSTMENT REFER TO SHEETS 12.58 & 12.59.
4. FOR CULVERT EXTENSION REFER TO SHEETS 12.60, & 12.61.
5. FOR CURB EXTENSION REFER TO SHEET 12.57.

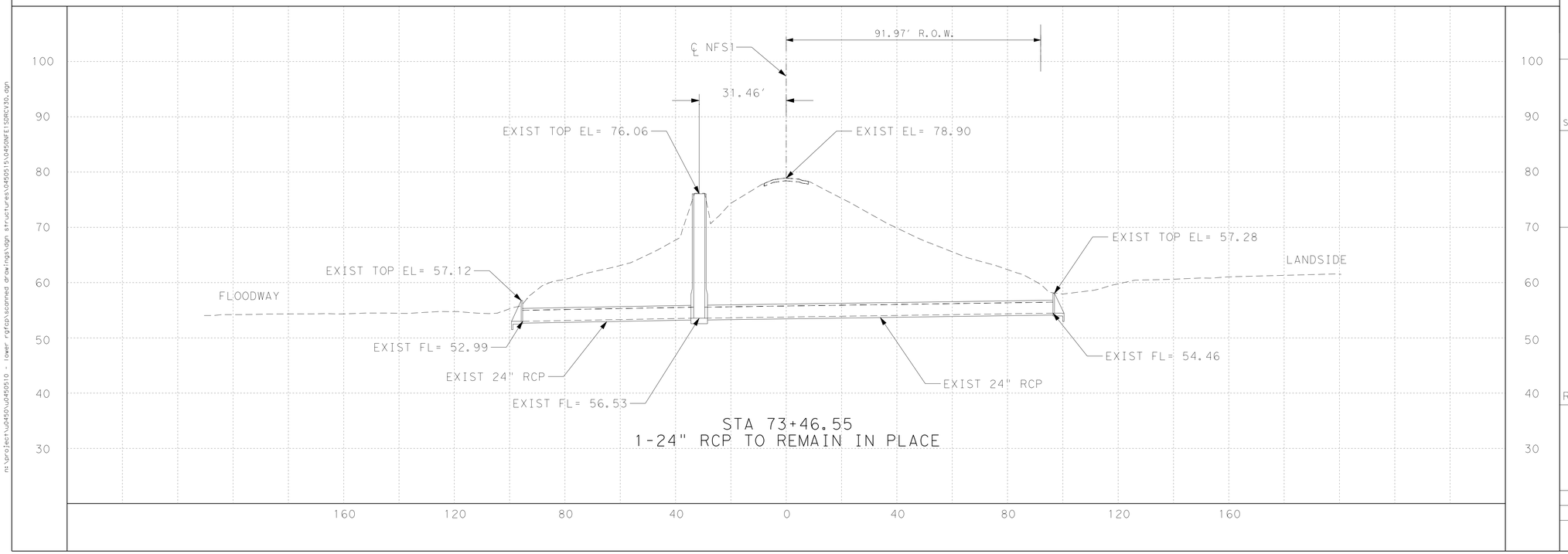

S&B INFRASTRUCTURE, LTD.
Engineering Management Technology
S&B Infrastructure, Ltd. Firm Registration Number: 1582

DL, INC.
DOS LOGISTICS, INC.
212 W. 3rd Sreet Phone: (956) 968-8800
Weslaco, Tx. 78596 Fax: (956) 447-8194
Dos Logistics, Inc. Firm Registration Number: F-9225

STATE OF TEXAS
JOSE G. REYES JR.
93827
LICENSED
PROFESSIONAL ENGINEER

The seal appearing on this document was authorized by JOSE G. REYES JR. P.E. 93827, on JUL. 29, 2009

REVISED 07/29/2009

NORTH FLOODWAY SOUTH LEVEE
(NFS1)
STRUCTURE NO. 162
STA 73+46.55

SHEET 31 OF 50

STATE	COUNTY	DRAWN BY:	CHECKED BY:	
TEXAS	HIDALGO	PROJECT NO.	IBM09T0018	SHEET NO.
REHABILITATION OF NORTH FLOODWAY NORTH AND SOUTH LEVEES (FM 1015 TO BASELINE RD)				12.35

n:\project\u0450\u0450510 - lower rgfcp\scanned drawings\dgn structures\0450515\0450NFE1SDRCV30.dgn

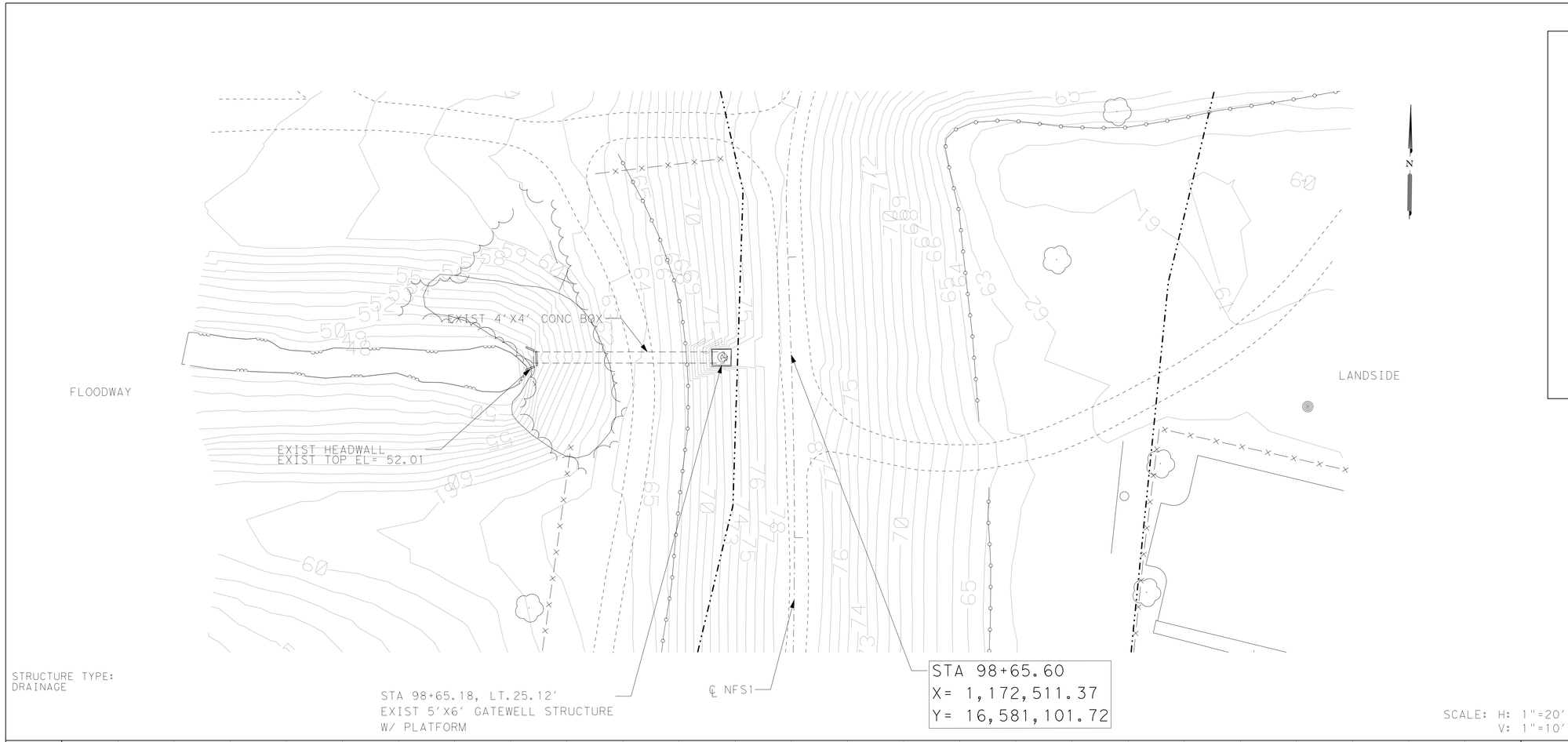

PLAN VIEW LEGEND

- PROP CENTERLINE
- EXIST RIGHT-OF-WAY
- EXIST GEOTECHNICAL BORE
- EXIST FLOODWALL
- EL-OH — EXIST OVERHEAD UTILITY LINE
- EXIST SIGN
- 101 — EXIST CONTOURS
- EXIST LEVEE TOE
- F/O — EXIST FIBER OPTIC LINE
- GAS — EXIST GAS LINE
- W — EXIST WATER LINE
- T — EXIST TELEPHONE LINE
- X — EXIST FENCE
- PROP SEDIMENT CONTROL FENCE
- WATER BOUNDARY
- PROP LEVEE MAINTENANCE ROAD

NOTES:

1. CULVERT INFORMATION TAKEN FROM AS BUILT PROVIDED BY IBWC IF AVAILABLE.
2. CULVERTS WERE NOT CHECKED FOR HYDRAULICS ADEQUACY UNDER THIS TASK ORDER.
3. FOR GATEWELL ADJUSTMENT REFER TO SHEETS 12.58 & 12.59.
4. FOR CULVERT EXTENSION REFER TO SHEETS 12.60, & 12.61.
5. FOR CURB EXTENSION REFER TO SHEET 12.57.

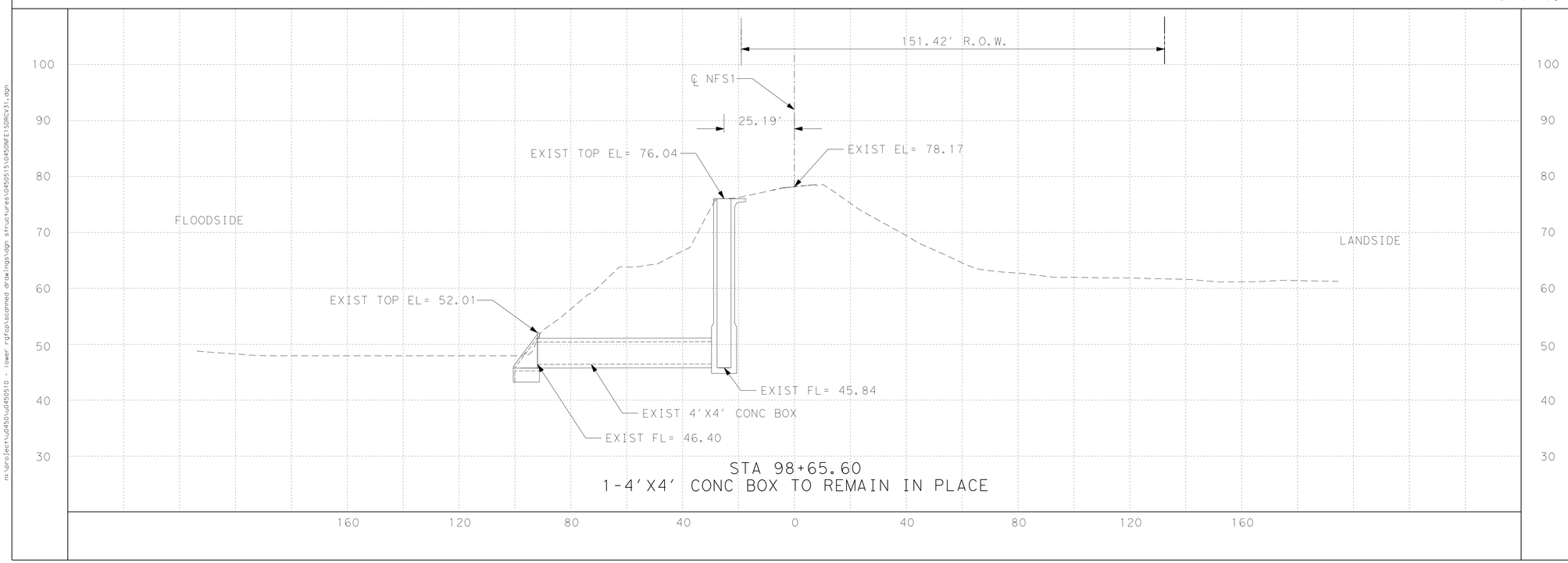

S&B INFRASTRUCTURE, LTD.
Engineering Management Technology
S&B Infrastructure, Ltd. Firm Registration Number: 1582

DL, INC.
DOS LOGISTICS, INC.
212 W. 3rd Sreet Phone: (956) 968-8800
Weslaco, Tx. 78596 Fax: (956) 447-8194
Dos Logistics, Inc. Firm Registration Number: F-9225

STATE OF TEXAS
JOSE G. REYES JR.
93827
LICENSED
PROFESSIONAL ENGINEER

The seal appearing on this document was authorized by JOSE G. REYES JR. P.E. 93827 on JUL. 29, 2009

REVISED 07/29/2009

NORTH FLOODWAY SOUTH LEVEE
(NFS1)
STRUCTURE NO. 160
STA 98+65.60

SHEET 32 OF 50

STATE	COUNTY	DRAWN BY:	CHECKED BY:	
TEXAS	HIDALGO	PROJECT NO.	IBM09T0018	SHEET NO.

REHABILITATION OF NORTH FLOODWAY
NORTH AND SOUTH LEVEES
(FM 1015 TO BASELINE RD)

12.36

n:\project\u0450\u0450510 - lower rgfcp\scanned drawings\dgn structures\0450515\0450NFE1SDRCV31.dgn

STRUCTURE TYPE:
IRRIGATION

PLAN VIEW LEGEND

- PROP CENTERLINE
- EXIST RIGHT-OF-WAY
- EXIST GEOTECHNICAL BORE
- EXIST FLOODWALL
- EL-OH — EXIST OVERHEAD UTILITY LINE
- EXIST SIGN
- 101 — EXIST CONTOURS
- EXIST LEVEE TOE
- F/O — EXIST FIBER OPTIC LINE
- GAS — EXIST GAS LINE
- W — EXIST WATER LINE
- T — EXIST TELEPHONE LINE
- EXIST FENCE
- PROP SEDIMENT CONTROL FENCE
- WATER BOUNDARY
- PROP LEVEE MAINTENANCE ROAD

NOTES:

1. CULVERT INFORMATION TAKEN FROM AS BUILT PROVIDED BY IBWC IF AVAILABLE.
2. CULVERTS WERE NOT CHECKED FOR HYDRAULICS ADEQUACY UNDER THIS TASK ORDER.
3. FOR GATEWELL ADJUSTMENT REFER TO SHEETS 12.58 & 12.59.
4. FOR CULVERT EXTENSION REFER TO SHEETS 12.60, & 12.61.
5. FOR CURB EXTENSION REFER TO SHEET 12.57.

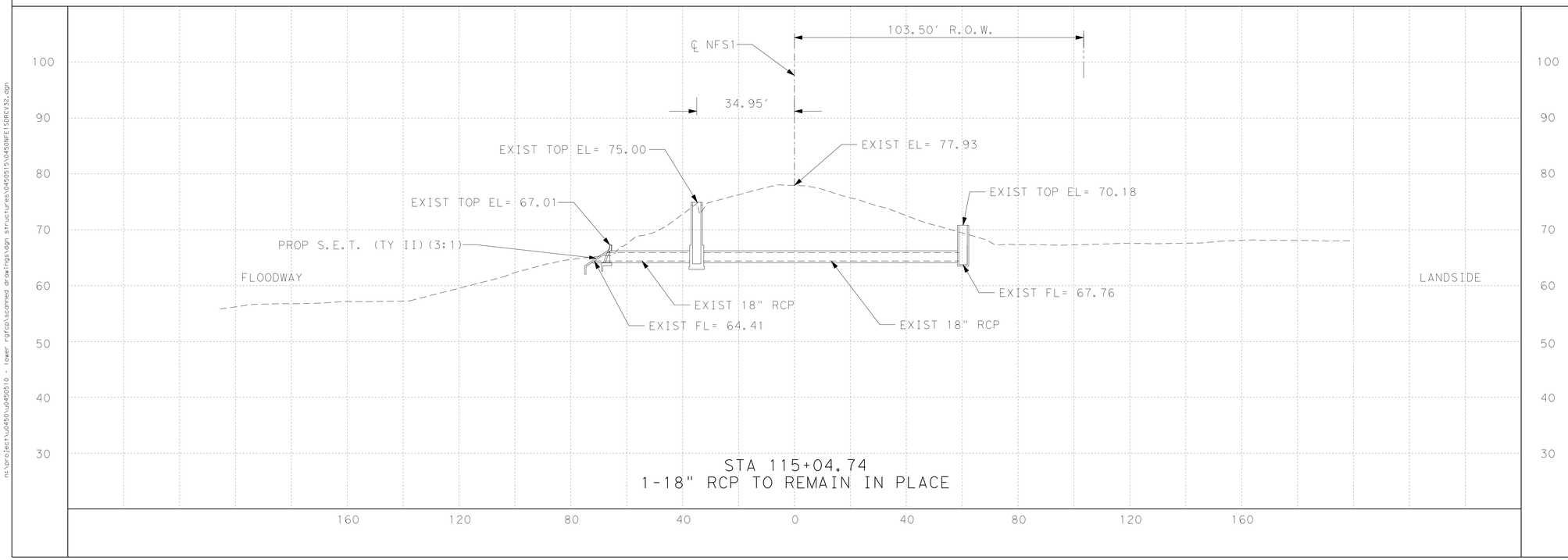

STA 115+04.74
1-18" RCP TO REMAIN IN PLACE

S&B INFRASTRUCTURE, LTD.
Engineering Management Technology
S&B Infrastructure, Ltd. Firm Registration Number: 1582

DL, INC.
DOS LOGISTICS, INC.
212 W. 3rd Sreet Phone: (956) 968-8800
Weslaco, Tx. 78596 Fax: (956) 447-8194
Dos Logistics, Inc. Firm Registration Number: F-9225

STATE OF TEXAS
JOSE G. REYES JR.
93827
LICENSED
PROFESSIONAL ENGINEER

The seal appearing on this document was authorized by JOSE G. REYES JR. P.E. 93827 on JUL. 29, 2009

REVISED 07/29/2009

NORTH FLOODWAY SOUTH LEVEE (NFS1) STRUCTURE NO. 159 STA 115+04.74

SHEET 33 OF 50

STATE	COUNTY	DRAWN BY:	CHECKED BY:	
TEXAS	HIDALGO	PROJECT NO.	IBM09T0018	SHEET NO.
REHABILITATION OF NORTH FLOODWAY NORTH AND SOUTH LEVEES (FM 1015 TO BASELINE RD)				12.37

m:\project\0450\0450510 - lower rgfcp\scanned drawings\dgn structures\0450515\0450NFE1SGRCV32.dgn

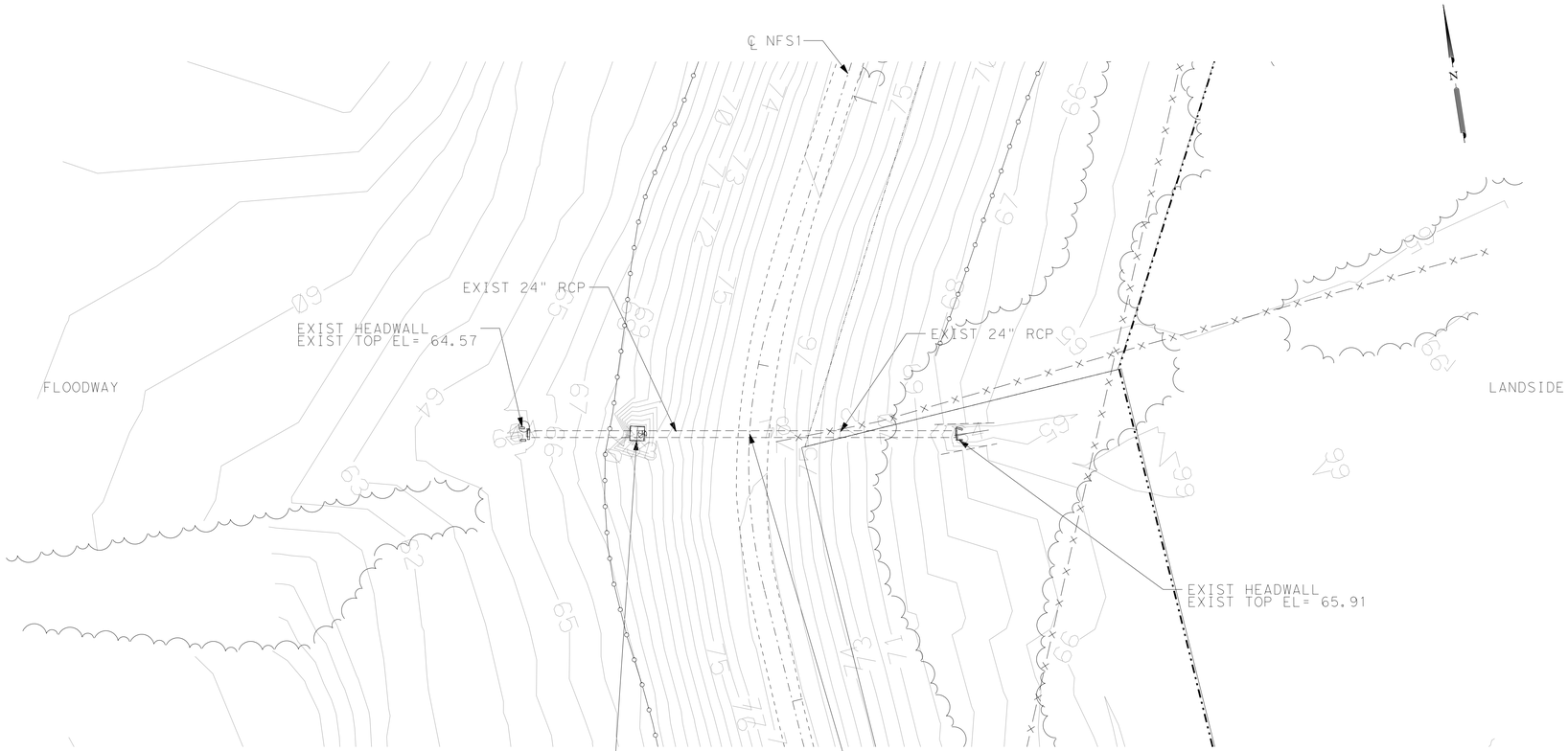

STRUCTURE TYPE:
IRRIGATION

SCALE H: 1"=20'
V: 1"=10'

PLAN VIEW LEGEND

- PROP CENTERLINE
- EXIST RIGHT-OF-WAY
- EXIST GEOTECHNICAL BORE
- EXIST FLOODWALL
- EL-OH — EXIST OVERHEAD UTILITY LINE
- EXIST SIGN
- 101 — EXIST CONTOURS
- EXIST LEVEE TOE
- F/O — EXIST FIBER OPTIC LINE
- GAS — EXIST GAS LINE
- W — EXIST WATER LINE
- T — EXIST TELEPHONE LINE
- X — EXIST FENCE
- PROP SEDIMENT CONTROL FENCE
- WATER BOUNDARY
- PROP LEVEE MAINTENANCE ROAD

NOTES:

1. CULVERT INFORMATION TAKEN FROM AS BUILT PROVIDED BY IBWC IF AVAILABLE.
2. CULVERTS WERE NOT CHECKED FOR HYDRAULICS ADEQUACY UNDER THIS TASK ORDER.
3. FOR GATEWELL ADJUSTMENT REFER TO SHEETS 12.58 & 12.59.
4. FOR CULVERT EXTENSION REFER TO SHEETS 12.60, & 12.61.
5. FOR CURB EXTENSION REFER TO SHEET 12.57.

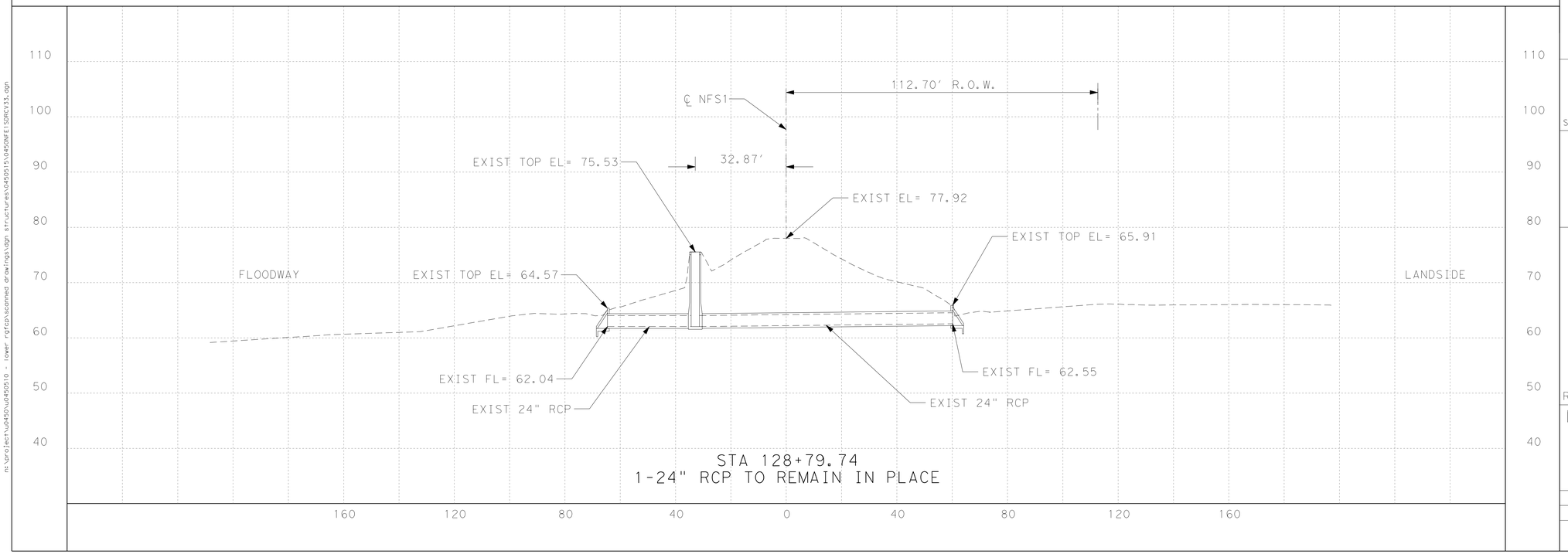

STA 128+79.74
1-24" RCP TO REMAIN IN PLACE

INTERNATIONAL BOUNDARY AND WATER COMMISSION
COMISION INTERNACIONAL DE LIMITES Y AGUAS

S&B INFRASTRUCTURE, LTD.
Engineering Management Technology
S&B Infrastructure, Ltd. Firm Registration Number: 1582

DL, INC.
DOS LOGISTICS, INC.
212 W. 3rd Sreet Phone: (956) 968-8800
Weslaco, Tx. 78596 Fax: (956) 447-8194
Dos Logistics, Inc. Firm Registration Number: F-9225

STATE OF TEXAS
JOSE G. REYES JR.
93827
LICENSED
PROFESSIONAL ENGINEER

The seal appearing on this document was authorized by JOSE G. REYES JR. P.E. 93827 on JUL. 29, 2009

REVISED 07/29/2009

NORTH FLOODWAY SOUTH LEVEE (NFS1) STRUCTURE NO. 158 STA 128+79.74

SHEET 34 OF 50

STATE	COUNTY	DRAWN BY:	CHECKED BY:	
TEXAS	HIDALGO	PROJECT NO.	IBM09T0018	SHEET NO.
REHABILITATION OF NORTH FLOODWAY NORTH AND SOUTH LEVEES (FM 1015 TO BASELINE RD)				12.38

m:\project\0450\u0450510 - lower rgfcp\scanned drawings\dgn structures\0450515\0450NFE1SDRCV33.dgn

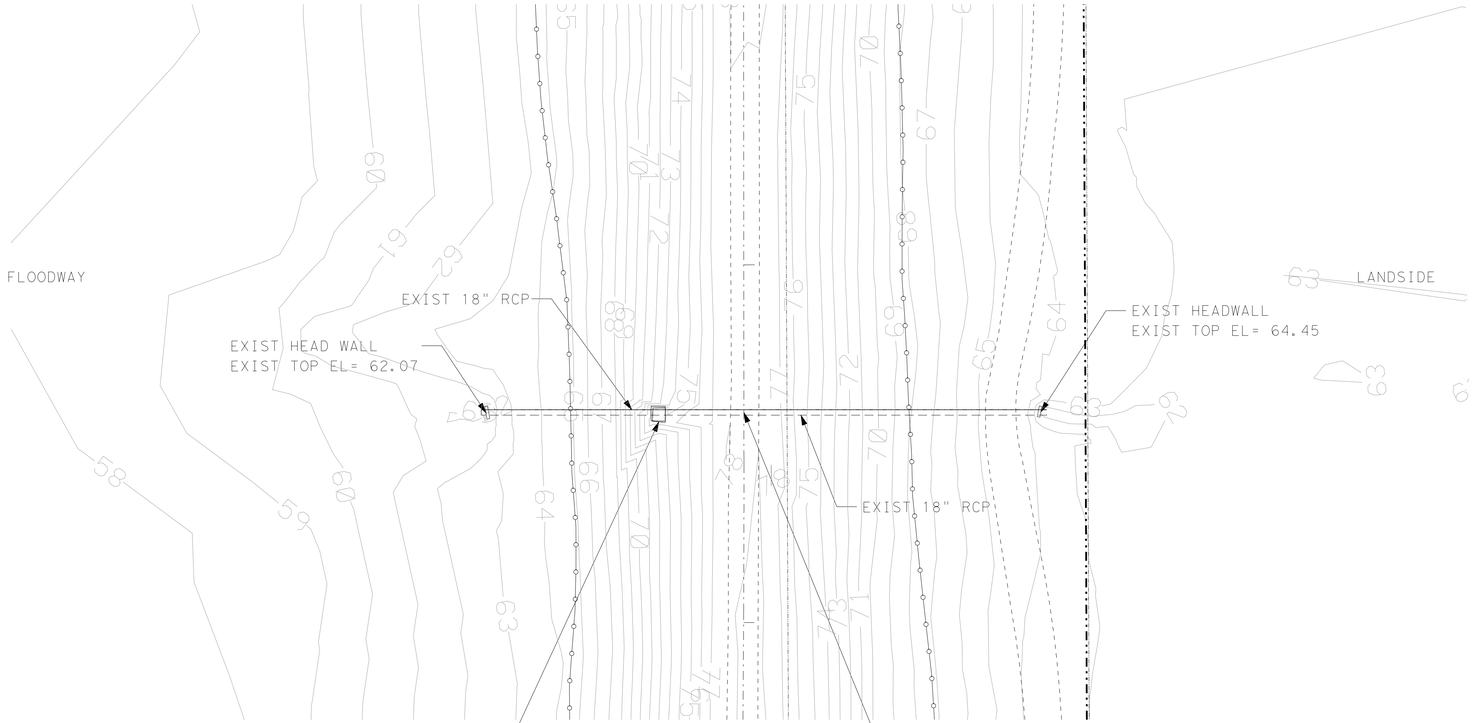

STRUCTURE TYPE:
DRAINAGE

SCALE H: 1"=20'
V: 1"=10'

PLAN VIEW LEGEND

- PROP CENTERLINE
- EXIST RIGHT-OF-WAY
- EXIST GEOTECHNICAL BORE
- EXIST FLOODWALL
- EL-OH — EXIST OVERHEAD UTILITY LINE
- EXIST SIGN
- 101 — EXIST CONTOURS
- EXIST LEVEE TOE
- F/O — EXIST FIBER OPTIC LINE
- GAS — EXIST GAS LINE
- W — EXIST WATER LINE
- T — EXIST TELEPHONE LINE
- X — X — EXIST FENCE
- PROP SEDIMENT CONTROL FENCE
- WATER BOUNDARY
- PROP LEVEE MAINTENANCE ROAD

NOTES:

1. CULVERT INFORMATION TAKEN FROM AS BUILT PROVIDED BY IBWC IF AVAILABLE.
2. CULVERTS WERE NOT CHECKED FOR HYDRAULICS ADEQUACY UNDER THIS TASK ORDER.
3. FOR GATEWELL ADJUSTMENT REFER TO SHEETS 12.58 & 12.59.
4. FOR CULVERT EXTENSION REFER TO SHEETS 12.60, & 12.61.
5. FOR CURB EXTENSION REFER TO SHEET 12.57.

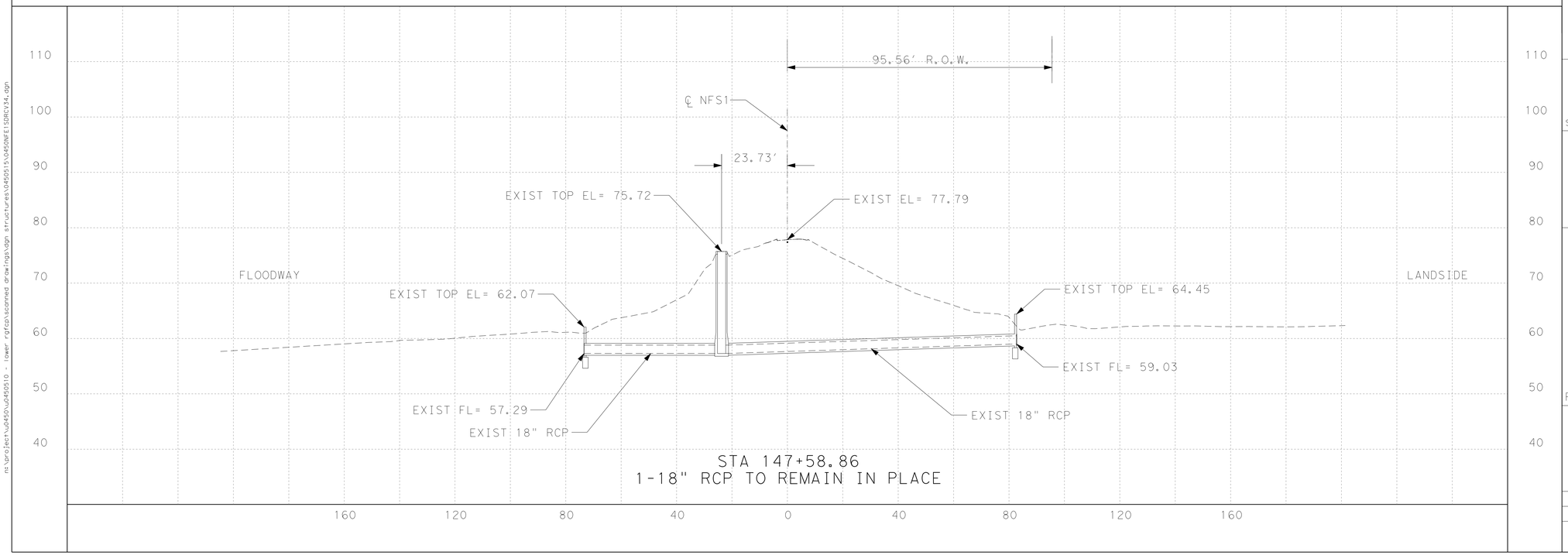

STA 147+58.86
1-18" RCP TO REMAIN IN PLACE

S&B INFRASTRUCTURE, LTD.
Engineering Management Technology
S&B Infrastructure, Ltd. Firm Registration Number: 1582

DL, INC.
DOS LOGISTICS, INC.
212 W. 3rd Sreet
Weslaco, Tx. 78596
Phone: (956) 968-8800
Fax: (956) 447-8194
Dos Logistics, Inc. Firm Registration Number: F-9225

STATE OF TEXAS
JOSE G. REYES JR.
93827
LICENSED
PROFESSIONAL ENGINEER

The seal appearing on this document was authorized by JOSE G. REYES JR. P.E. 93827 on JUL 29 20 09

REVISED 07/29/2009

NORTH FLOODWAY SOUTH LEVEE (NFS1) STRUCTURE NO. 157 STA 147+58.86

SHEET 35 OF 50

STATE	COUNTY	DRAWN BY:	CHECKED BY:	
TEXAS	HIDALGO	PROJECT NO.	IBM09T0018	SHEET NO.
REHABILITATION OF NORTH FLOODWAY NORTH AND SOUTH LEVEES (FM 1015 TO BASELINE RD)				12.39

n:\project\u2450\u2450510 - lower rgfcp\scanned drawings\dgn structures\U450515\U450NFE1SDRCV34.dgn

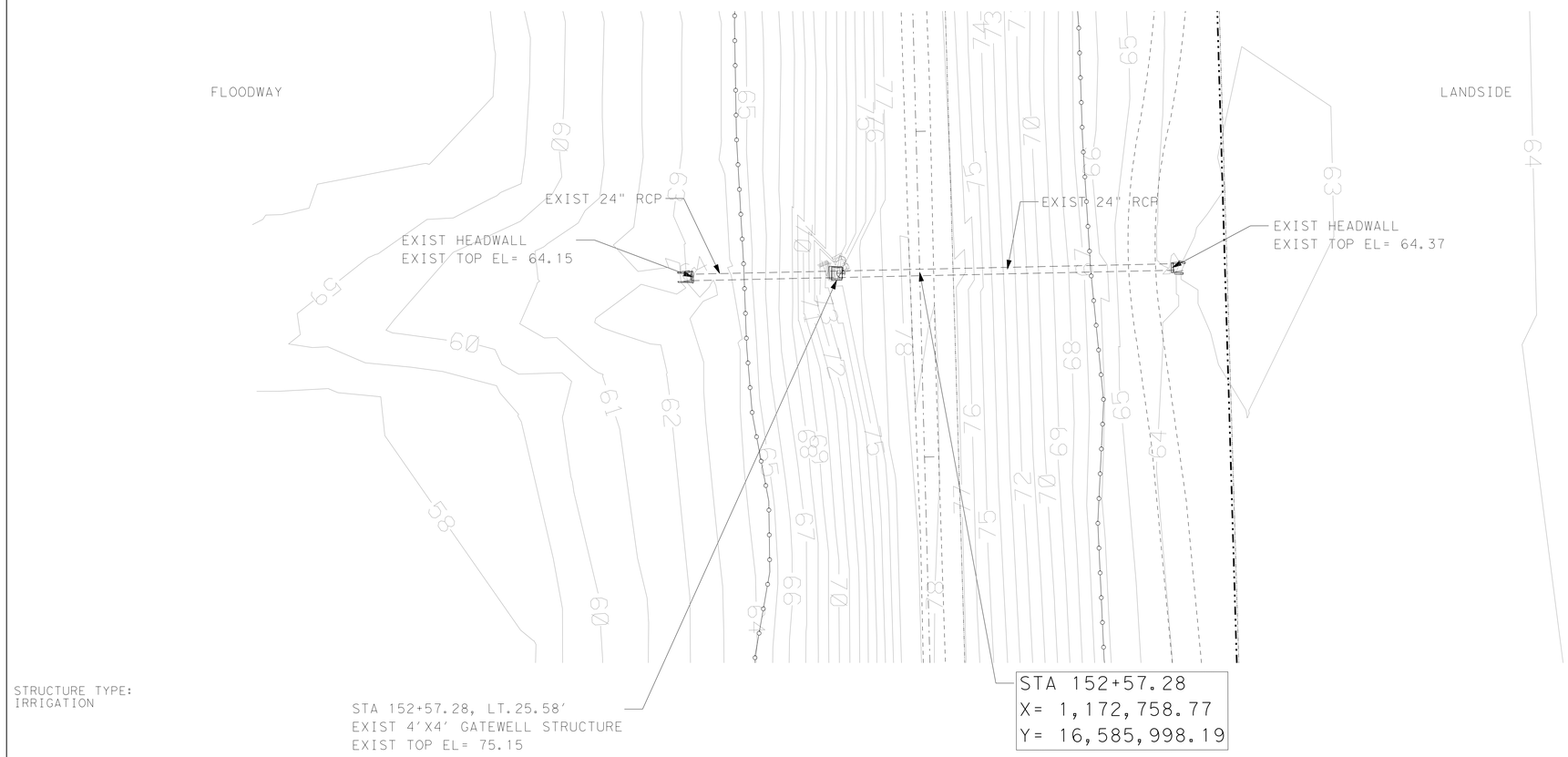

PLAN VIEW LEGEND

- PROP CENTERLINE
- EXIST RIGHT-OF-WAY
- EXIST GEOTECHNICAL BORE
- EXIST FLOODWALL
- EL-OH — EXIST OVERHEAD UTILITY LINE
- EXIST SIGN
- 101 — EXIST CONTOURS
- EXIST LEVEE TOE
- F/O — EXIST FIBER OPTIC LINE
- GAS — EXIST GAS LINE
- W — EXIST WATER LINE
- T — EXIST TELEPHONE LINE
- X — EXIST FENCE
- PROP SEDIMENT CONTROL FENCE
- WATER BOUNDARY
- PROP LEVEE MAINTENANCE ROAD

NOTES:

1. CULVERT INFORMATION TAKEN FROM AS BUILT PROVIDED BY IBWC IF AVAILABLE.
2. CULVERTS WERE NOT CHECKED FOR HYDRAULICS ADEQUACY UNDER THIS TASK ORDER.
3. FOR GATEWELL ADJUSTMENT REFER TO SHEETS 12.58 & 12.59.
4. FOR CULVERT EXTENSION REFER TO SHEETS 12.60, & 12.61.
5. FOR CURB EXTENSION REFER TO SHEET 12.57.

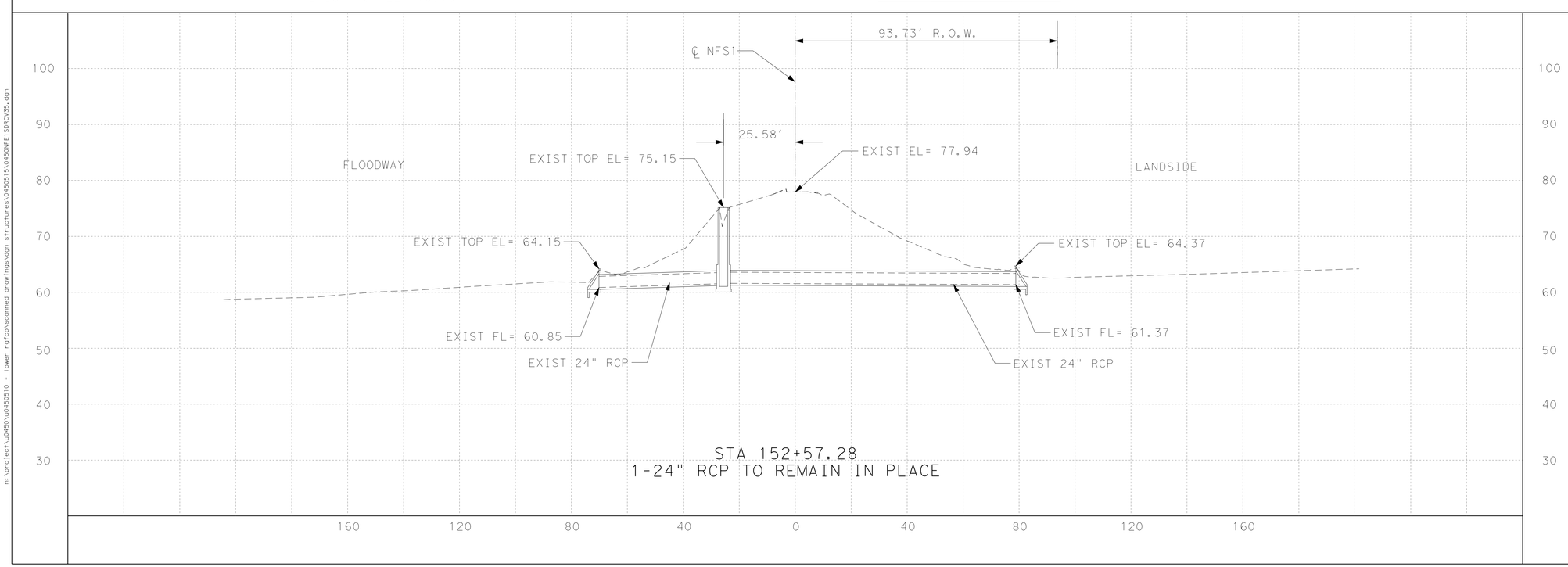

S&B INFRASTRUCTURE, LTD.
Engineering Management Technology
S&B Infrastructure, Ltd. Firm Registration Number: 1582

DL, INC.
DOS LOGISTICS, INC.
212 W. 3rd Sreet
Weslaco, Tx. 78596
Phone: (956) 968-8800
Fax: (956) 447-8194
Dos Logistics, Inc. Firm Registration Number: F-9225

STATE OF TEXAS
JOSE G. REYES JR.
93827
LICENSED
PROFESSIONAL ENGINEER

The seal appearing on this document was authorized by JOSE G. REYES JR. P.E. 93827 on JUL 29 20 09

REVISED 07/29/2009

NORTH FLOODWAY SOUTH LEVEE (NFS1) STRUCTURE NO. 156A STA 152+57.28

SHEET 36 OF 50

STATE	COUNTY	DRAWN BY:	CHECKED BY:	
TEXAS	HIDALGO	PROJECT NO.	IBM09T0018	SHEET NO.
REHABILITATION OF NORTH FLOODWAY NORTH AND SOUTH LEVEES (FM 1015 TO BASELINE RD)				12.40

m:\project\p450\p450510 - lower rgfcp\scanned drawings\dgn structures\0450515\0450NFESDRCV35.dgn

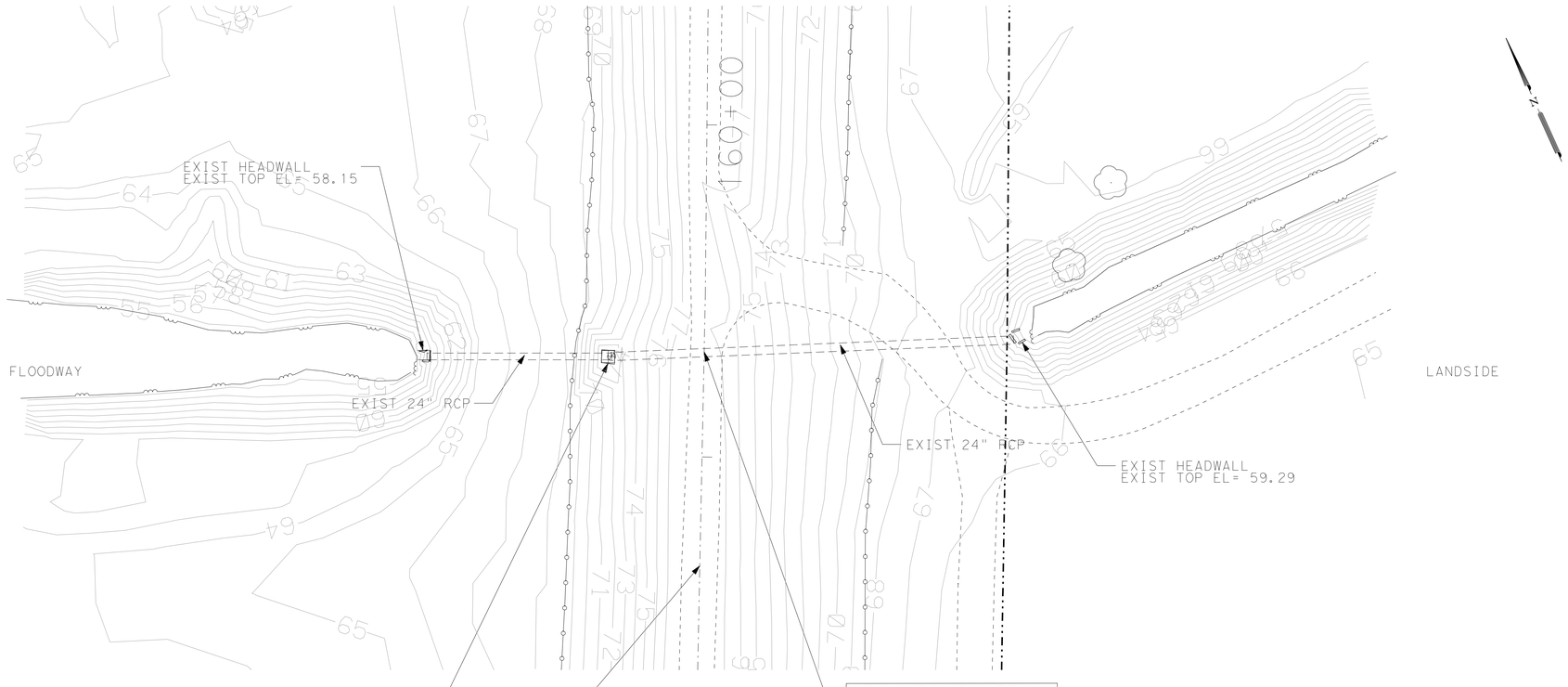

STRUCTURE TYPE:
DRAINAGE

SCALE H: 1"=20'
V: 1"=10'

PLAN VIEW LEGEND

- PROP CENTERLINE
- EXIST RIGHT-OF-WAY
- EXIST GEOTECHNICAL BORE
- EXIST FLOODWALL
- EL-OH — EXIST OVERHEAD UTILITY LINE
- EXIST SIGN
- 101 — EXIST CONTOURS
- EXIST LEVEE TOE
- F/O — EXIST FIBER OPTIC LINE
- GAS — EXIST GAS LINE
- W — EXIST WATER LINE
- T — EXIST TELEPHONE LINE
- X — X — EXIST FENCE
- PROP SEDIMENT CONTROL FENCE
- WATER BOUNDARY
- PROP LEVEE MAINTENANCE ROAD

NOTES:

1. CULVERT INFORMATION TAKEN FROM AS BUILT PROVIDED BY IBWC IF AVAILABLE.
2. CULVERTS WERE NOT CHECKED FOR HYDRAULICS ADEQUACY UNDER THIS TASK ORDER.
3. FOR GATEWELL ADJUSTMENT REFER TO SHEETS 12.58 & 12.59.
4. FOR CULVERT EXTENSION REFER TO SHEETS 12.60, & 12.61.
5. FOR CURB EXTENSION REFER TO SHEET 12.57.

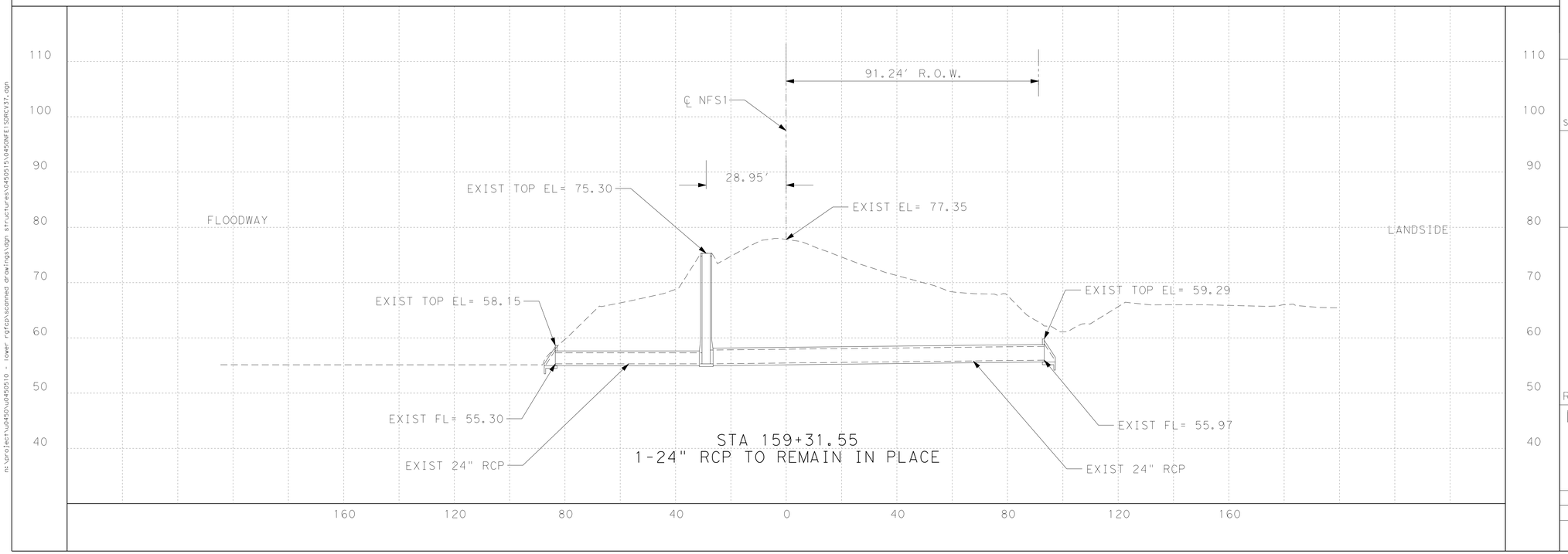

S&B INFRASTRUCTURE, LTD.
Engineering Management Technology
S&B Infrastructure, Ltd. Firm Registration Number: 1582

DL, INC.
DOS LOGISTICS, INC.
212 W. 3rd Sreet Phone: (956) 968-8800
Weslaco, Tx. 78596 Fax: (956) 447-8194
Dos Logistics, Inc. Firm Registration Number: F-9225

STATE OF TEXAS
JOSE G. REYES JR.
93827
LICENSED PROFESSIONAL ENGINEER

The seal appearing on this document was authorized by JOSE G. REYES JR. P.E. 93827 on JUL. 29, 2009

REVISED 07/29/2009

NORTH FLOODWAY SOUTH LEVEE (NFS1) STRUCTURE NO. 155A STA 159+31.55

SHEET 37 OF 50

STATE	COUNTY	DRAWN BY:	CHECKED BY:	
TEXAS	HIDALGO	PROJECT NO.	IBM09T0018	SHEET NO.
REHABILITATION OF NORTH FLOODWAY NORTH AND SOUTH LEVEES (FM 1015 TO BASELINE RD)				12.41

m:\project\0450\0450510 - lower rgfcp\scanned drawings\dgn structures\0450515\0450NFE1SDRCV37.dgn

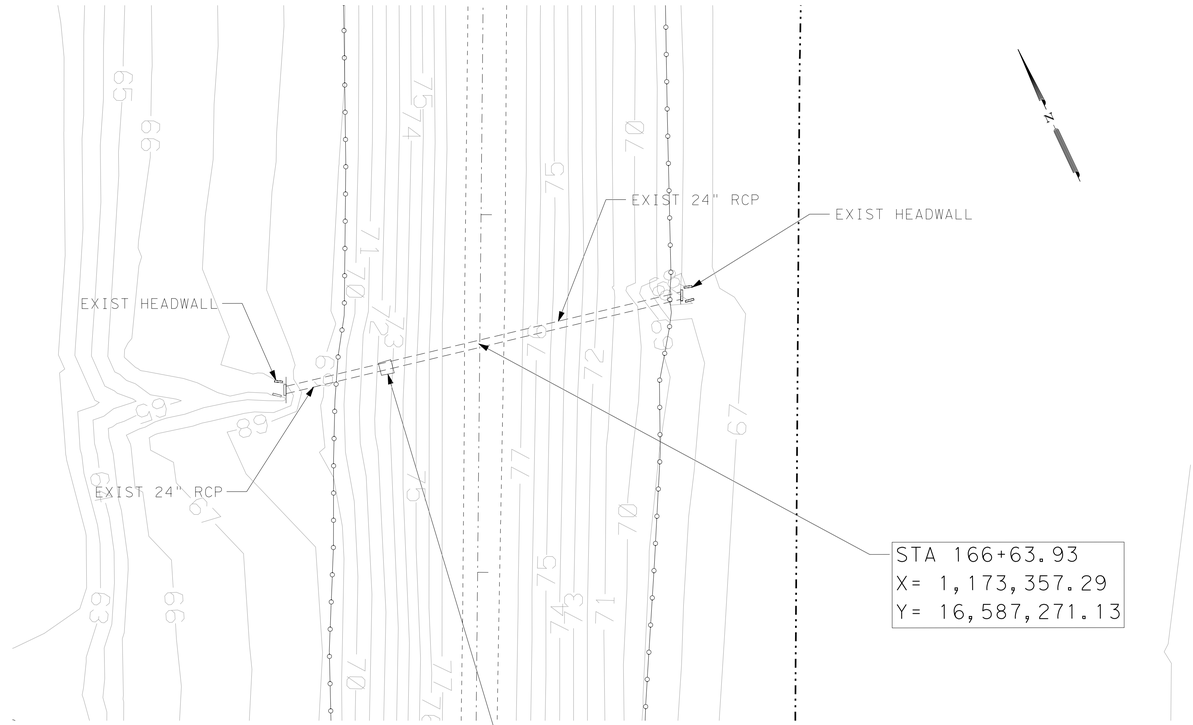

STRUCTURE TYPE:
IRRIGATION

SCALE H: 1"=20'
V: 1"=10'

PLAN VIEW LEGEND

- PROP CENTERLINE
- EXIST RIGHT-OF-WAY
- EXIST GEOTECHNICAL BORE
- EXIST FLOODWALL
- EL-OH — EXIST OVERHEAD UTILITY LINE
- EXIST SIGN
- 101 — EXIST CONTOURS
- EXIST LEVEE TOE
- F/O — EXIST FIBER OPTIC LINE
- GAS — EXIST GAS LINE
- W — EXIST WATER LINE
- T — EXIST TELEPHONE LINE
- X — EXIST FENCE
- PROP SEDIMENT CONTROL FENCE
- WATER BOUNDARY
- PROP LEVEE MAINTENANCE ROAD

NOTES:

1. CULVERT INFORMATION TAKEN FROM AS BUILT PROVIDED BY IBWC IF AVAILABLE.
2. CULVERTS WERE NOT CHECKED FOR HYDRAULICS ADEQUACY UNDER THIS TASK ORDER.
3. FOR GATEWELL ADJUSTMENT REFER TO SHEETS 12.58 & 12.59.
4. FOR CULVERT EXTENSION REFER TO SHEETS 12.60, & 12.61.
5. FOR CURB EXTENSION REFER TO SHEET 12.57.

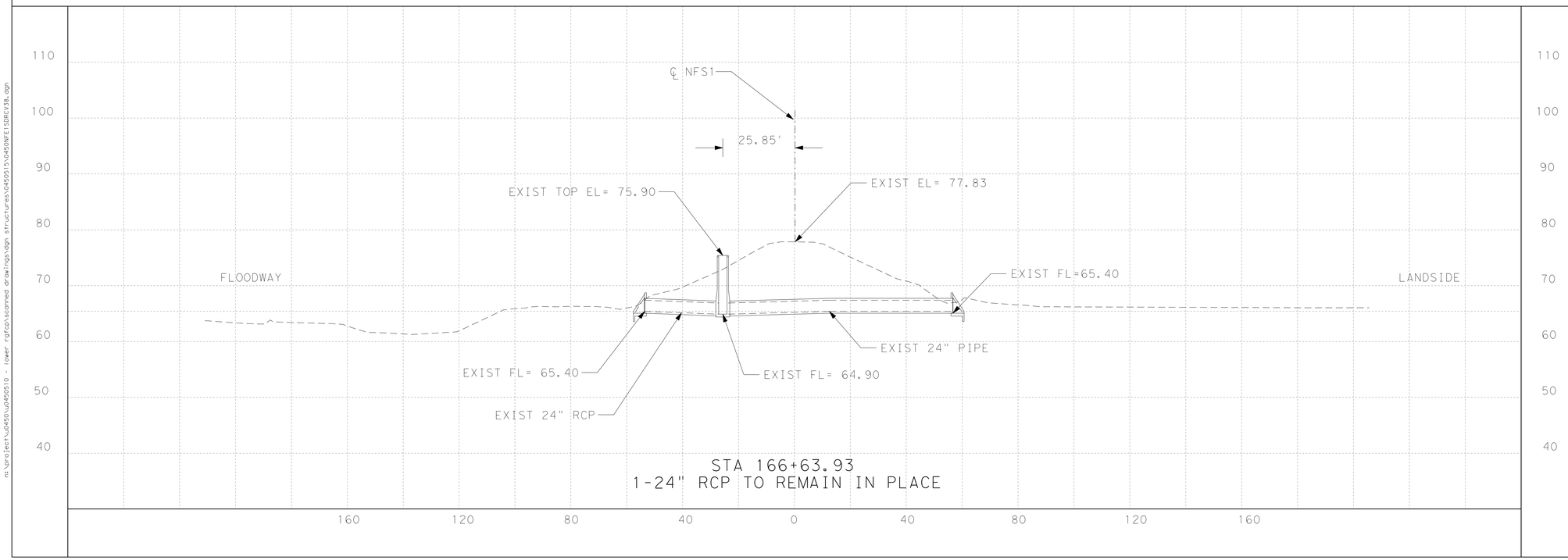

STA 166+63.93
1-24" RCP TO REMAIN IN PLACE

S&B INFRASTRUCTURE, LTD.
Engineering Management Technology
S&B Infrastructure, Ltd. Firm Registration Number: 1582

DL, INC.
DOS LOGISTICS, INC.
212 W. 3rd Sreet Phone: (956) 968-8800
Weslaco, Tx. 78596 Fax: (956) 447-8194
Dos Logistics, Inc. Firm Registration Number: F-9225

STATE OF TEXAS
JOSE G. REYES JR.
93827
LICENSED
PROFESSIONAL ENGINEER

The seal appearing on this document was authorized by JOSE G. REYES JR. P.E. 93827 on JUL. 29, 2009

REVISED 07/29/2009

NORTH FLOODWAY SOUTH LEVEE (NFS1) STRUCTURE NO. 155 STA 166+63.93

SHEET 38 OF 50

STATE	COUNTY	DRAWN BY:	CHECKED BY:	
TEXAS	HIDALGO	PROJECT NO.	IBM09T0018	SHEET NO.
REHABILITATION OF NORTH FLOODWAY NORTH AND SOUTH LEVEES (FM 1015 TO BASELINE RD)				12.41A

m:\project\0450\0450510 - lower rgfcp\scanned drawings\dgn structures\0450515\0450NFE1SGRCV38.dgn

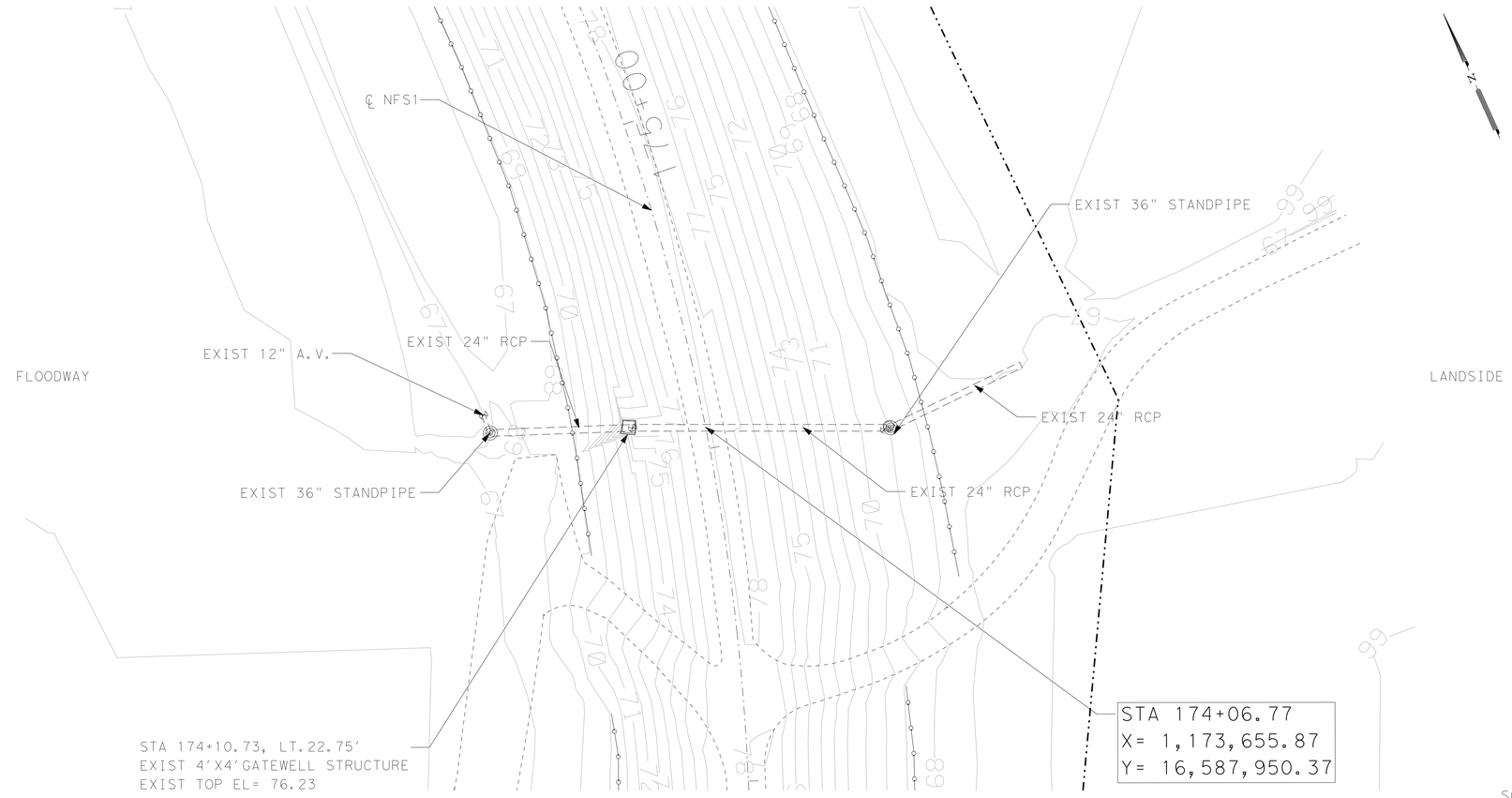

STRUCTURE TYPE:
IRRIGATION

SCALE H: 1"=20'
V: 1"=10'

PLAN VIEW LEGEND

- PROP CENTERLINE
- EXIST RIGHT-OF-WAY
- EXIST GEOTECHNICAL BORE
- EXIST FLOODWALL
- EL-OH — EXIST OVERHEAD UTILITY LINE
- EXIST SIGN
- 101 — EXIST CONTOURS
- EXIST LEVEE TOE
- F/O — EXIST FIBER OPTIC LINE
- GAS — EXIST GAS LINE
- W — EXIST WATER LINE
- T — EXIST TELEPHONE LINE
- X — EXIST FENCE
- PROP SEDIMENT CONTROL FENCE
- WATER BOUNDARY
- PROP LEVEE MAINTENANCE ROAD

NOTES:

1. CULVERT INFORMATION TAKEN FROM AS BUILT PROVIDED BY IBWC IF AVAILABLE.
2. CULVERTS WERE NOT CHECKED FOR HYDRAULICS ADEQUACY UNDER THIS TASK ORDER.
3. FOR GATEWELL ADJUSTMENT REFER TO SHEETS 12.58 & 12.59.
4. FOR CULVERT EXTENSION REFER TO SHEETS 12.60, & 12.61.
5. FOR CURB EXTENSION REFER TO SHEET 12.57.

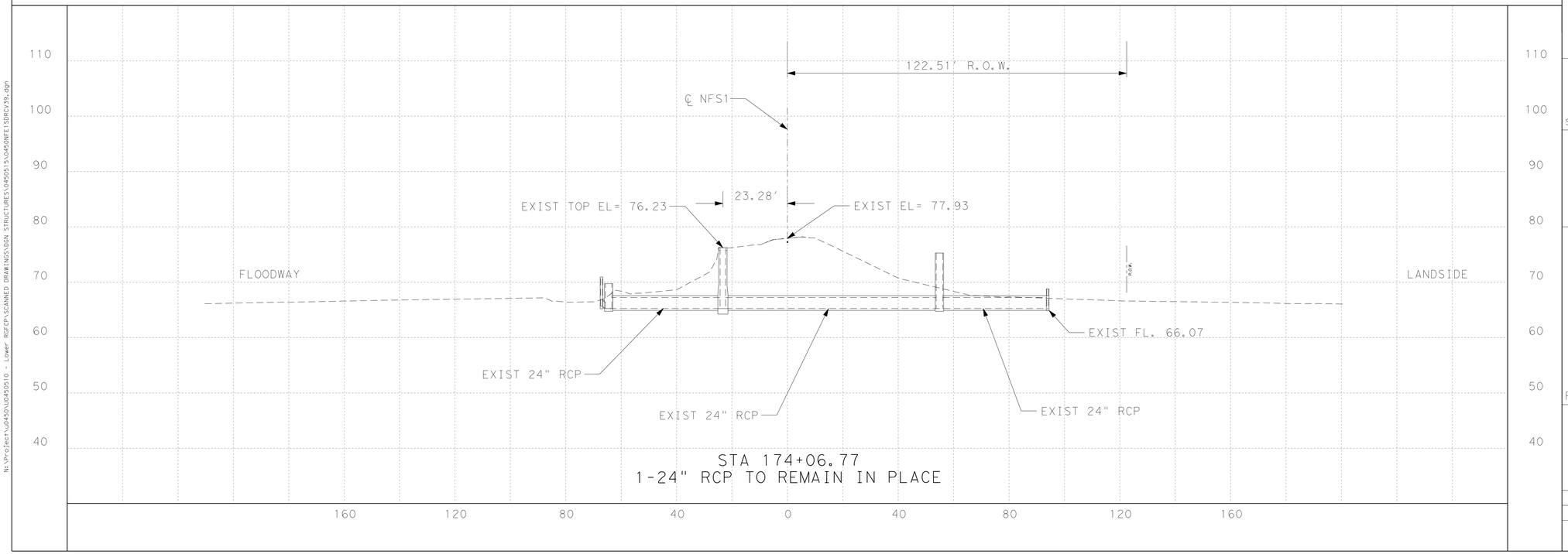

STA 174+06.77
1-24" RCP TO REMAIN IN PLACE

S&B INFRASTRUCTURE, LTD.
Engineering Management Technology
S&B Infrastructure, Ltd. Firm Registration Number: 1582

DL, INC.
DOS LOGISTICS, INC.
212 W. 3rd Sreet
Weslaco, Tx. 78596
Phone: (956) 968-8800
Fax: (956) 447-8194
Dos Logistics, Inc. Firm Registration Number: F-9225

STATE OF TEXAS
JOSE G. REYES JR.
93827
LICENSED
PROFESSIONAL ENGINEER

The seal appearing on this document was authorized by JOSE G. REYES JR. P.E. 93827 on JUL 29 2009

REVISED 07/29/2009

NORTH FLOODWAY SOUTH LEVEE (NFS1) STRUCTURE NO. 153 STA 174+06.77

SHEET 39 OF 50

STATE	COUNTY	DRAWN BY:	CHECKED BY:	
TEXAS	HIDALGO	PROJECT NO. IBM09T0018		SHEET NO.
REHABILITATION OF NORTH FLOODWAY NORTH AND SOUTH LEVEES (FM 1015 TO BASELINE RD)				12.42

N:\Project\u0450\U0450510 - Lower RGFCP\SCANNED DRAWINGS\DGN STRUCTURES\0450515\0450NFESDRCV39.dgn

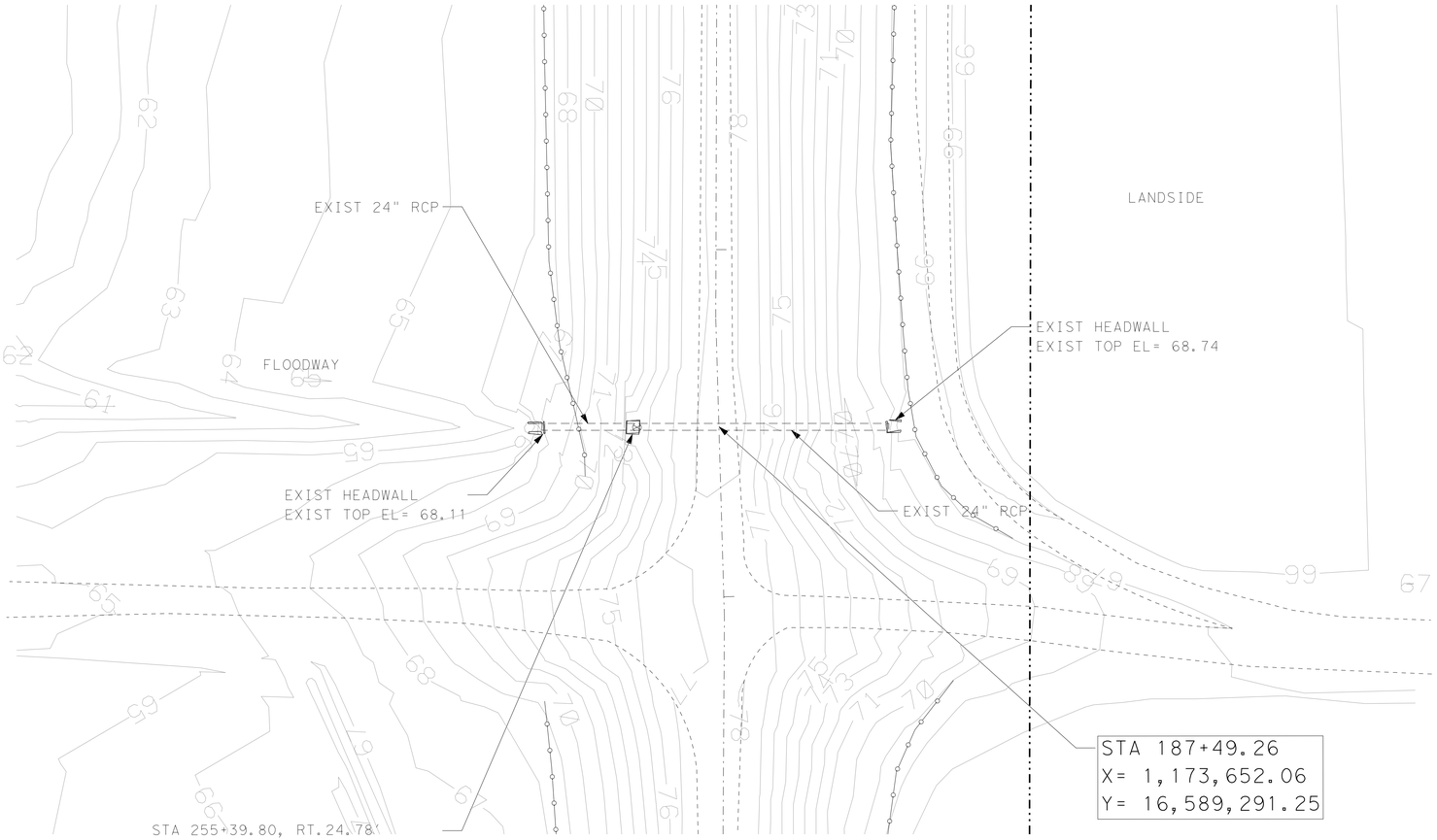

STRUCTURE TYPE:
IRRIGATION

SCALE H: 1"=20'
V: 1"=10'

PLAN VIEW LEGEND

- PROP CENTERLINE
- EXIST RIGHT-OF-WAY
- EXIST GEOTECHNICAL BORE
- EXIST FLOODWALL
- EL-OH — EXIST OVERHEAD UTILITY LINE
- EXIST SIGN
- 101 — EXIST CONTOURS
- EXIST LEVEE TOE
- F/O — EXIST FIBER OPTIC LINE
- GAS — EXIST GAS LINE
- W — EXIST WATER LINE
- T — EXIST TELEPHONE LINE
- X — X — EXIST FENCE
- PROP SEDIMENT CONTROL FENCE
- WATER BOUNDARY
- PROP LEVEE MAINTENANCE ROAD

NOTES:

1. CULVERT INFORMATION TAKEN FROM AS BUILT PROVIDED BY IBWC IF AVAILABLE.
2. CULVERTS WERE NOT CHECKED FOR HYDRAULICS ADEQUACY UNDER THIS TASK ORDER.
3. FOR GATEWELL ADJUSTMENT REFER TO SHEETS 12.58 & 12.59.
4. FOR CULVERT EXTENSION REFER TO SHEETS 12.60, & 12.61.
5. FOR CURB EXTENSION REFER TO SHEET 12.57.

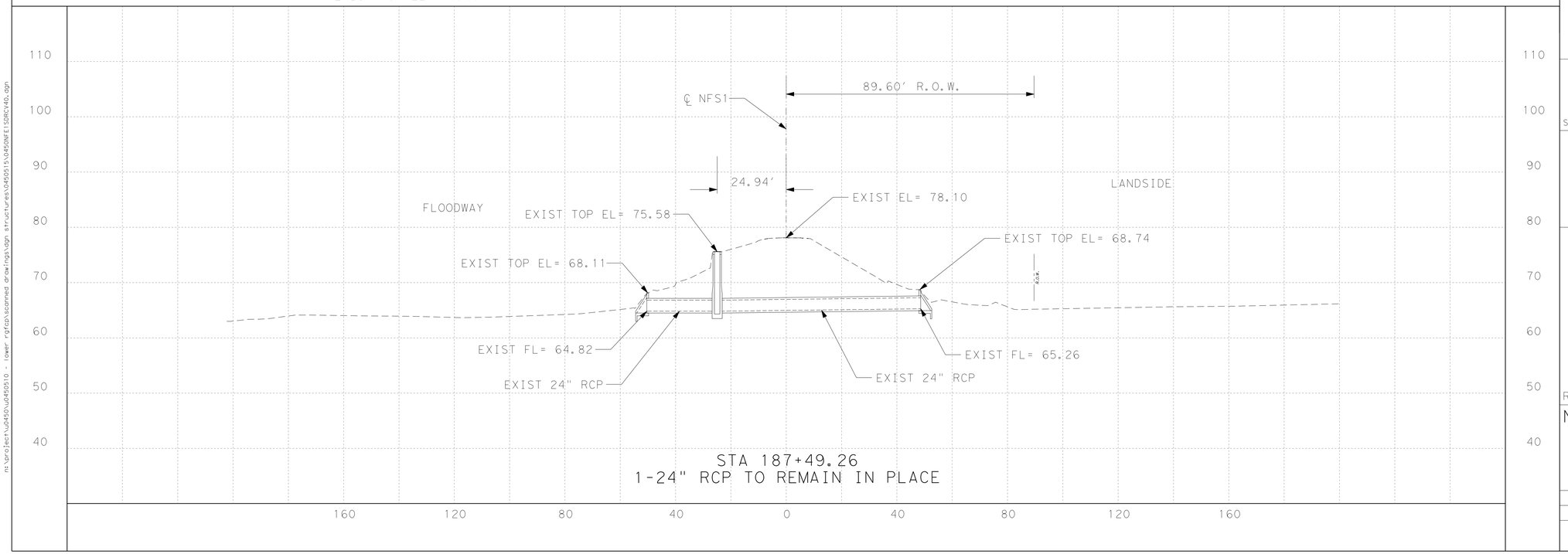

STA 187+49.26
1-24" RCP TO REMAIN IN PLACE

S&B INFRASTRUCTURE, LTD.
Engineering Management Technology
S&B Infrastructure, Ltd. Firm Registration Number: 1582

DL, INC.
DOS LOGISTICS, INC.
212 W. 3rd Sreet Weslaco, Tx. 78596
Phone: (956) 968-8800 Fax: (956) 447-8194
Dos Logistics, Inc. Firm Registration Number: F-9225

STATE OF TEXAS
JOSE G. REYES JR.
93827
LICENSED PROFESSIONAL ENGINEER

The seal appearing on this document was authorized by JOSE G. REYES JR. P.E. 93827 on JUL 29 20 09

REVISED 07/29/2009

NORTH FLOODWAY SOUTH LEVEE (NFS1) STRUCTURE NO. 151 STA 187+49.26

SHEET 40 OF 50

STATE	COUNTY	DRAWN BY:	CHECKED BY:	
TEXAS	HIDALGO	PROJECT NO.	IBM09T0018	SHEET NO.
REHABILITATION OF NORTH FLOODWAY NORTH AND SOUTH LEVEES (FM 1015 TO BASELINE RD)				12.43

n:\project\u2450\u2450510 - lower rgfcp\scanned drawings\dgn structures\0450515\0450NFESDRCV40.dgn

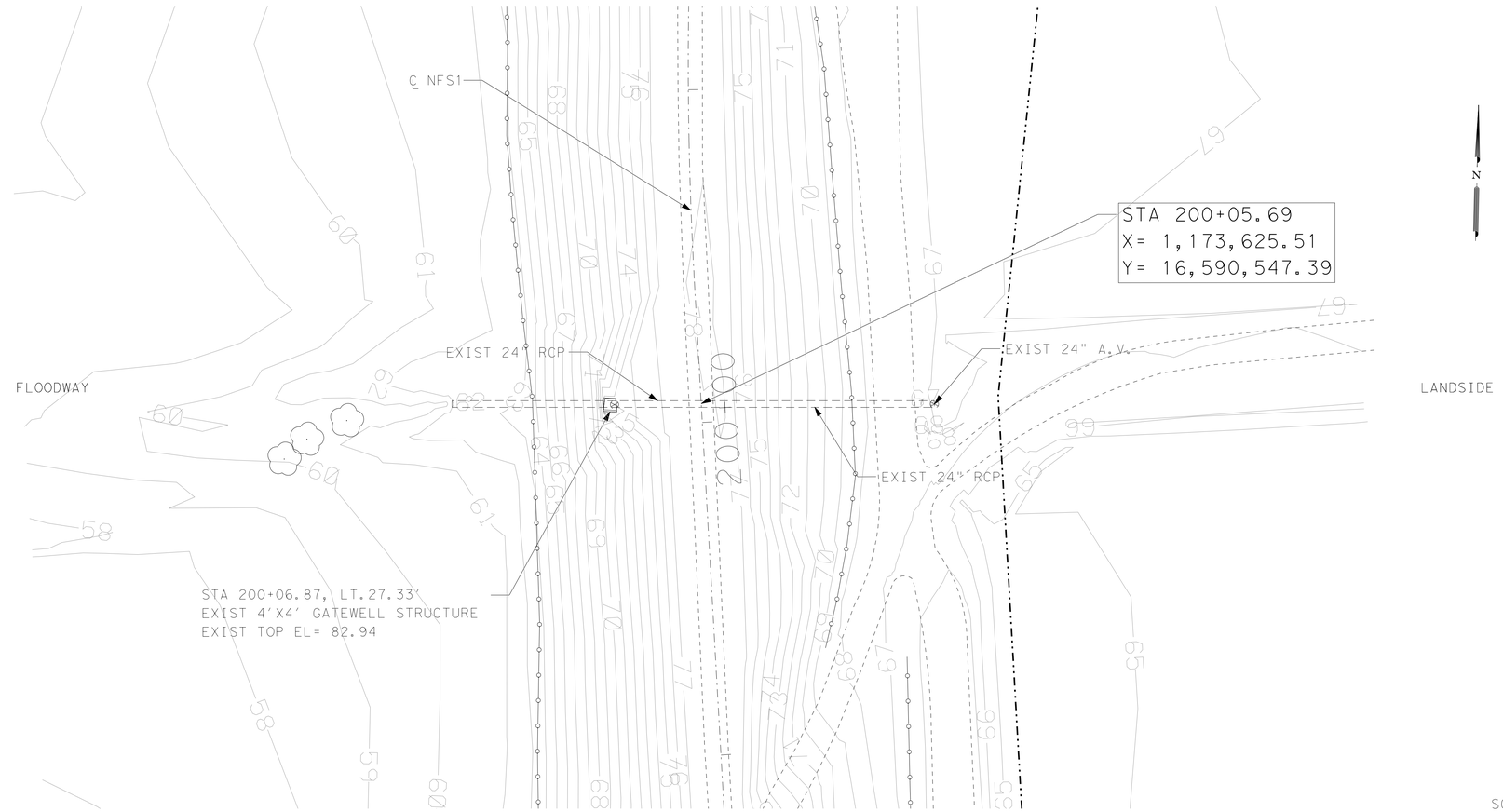

STRUCTURE TYPE:
DRAINAGE

SCALE H: 1"=20'
V: 1"=10'

PLAN VIEW LEGEND

- PROP CENTERLINE
- EXIST RIGHT-OF-WAY
- EXIST GEOTECHNICAL BORE
- EXIST FLOODWALL
- EL-OH — EXIST OVERHEAD UTILITY LINE
- EXIST SIGN
- 101 — EXIST CONTOURS
- EXIST LEVEE TOE
- F/O — EXIST FIBER OPTIC LINE
- GAS — EXIST GAS LINE
- W — EXIST WATER LINE
- T — EXIST TELEPHONE LINE
- X — X — EXIST FENCE
- PROP SEDIMENT CONTROL FENCE
- WATER BOUNDARY
- PROP LEVEE MAINTENANCE ROAD

NOTES:

1. CULVERT INFORMATION TAKEN FROM AS BUILT PROVIDED BY IBWC IF AVAILABLE.
2. CULVERTS WERE NOT CHECKED FOR HYDRAULICS ADEQUACY UNDER THIS TASK ORDER.
3. FOR GATEWELL ADJUSTMENT REFER TO SHEETS 12.58 & 12.59.
4. FOR CULVERT EXTENSION REFER TO SHEETS 12.60, & 12.61.
5. FOR CURB EXTENSION REFER TO SHEET 12.57.

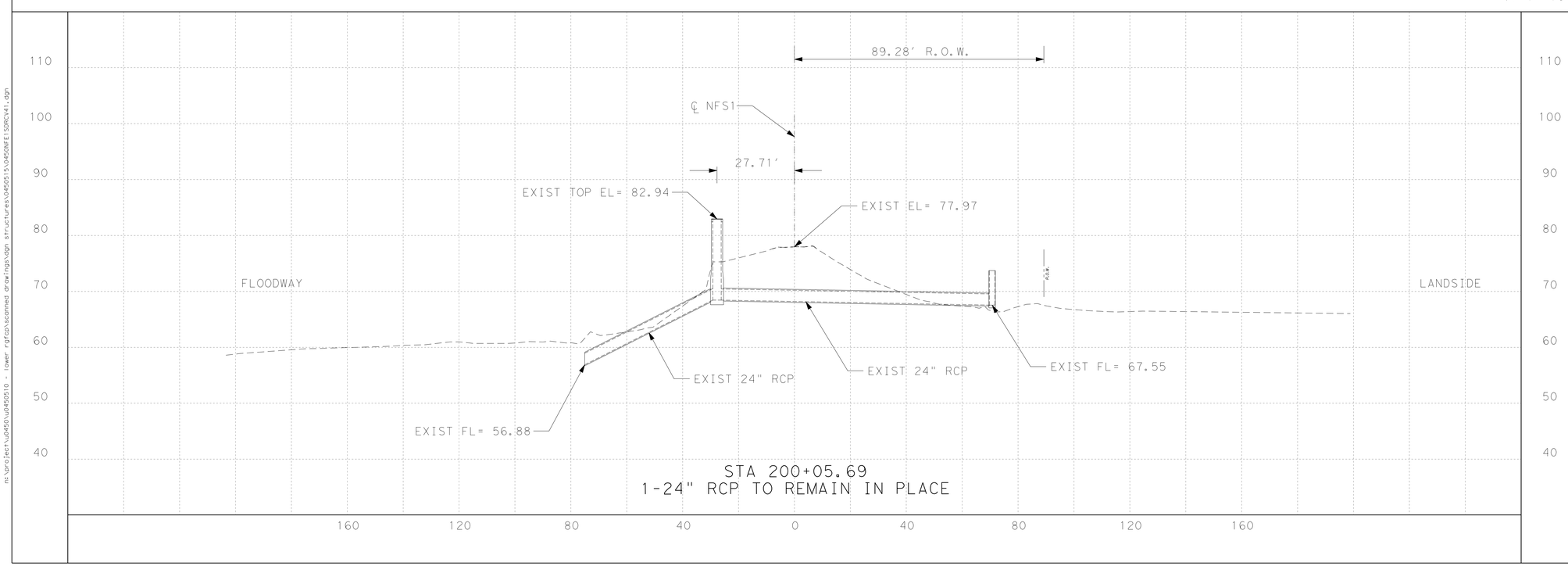

STA 200+05.69
1-24" RCP TO REMAIN IN PLACE

S&B INFRASTRUCTURE, LTD.
Engineering Management Technology
S&B Infrastructure, Ltd. Firm Registration Number: 1582

DL, INC.
DOS LOGISTICS, INC.
212 W. 3rd Sreet Weslaco, Tx. 78596
Phone: (956) 968-8800 Fax: (956) 447-8194
Dos Logistics, Inc. Firm Registration Number: F-9225

STATE OF TEXAS
JOSE G. REYES JR.
93827
LICENSED PROFESSIONAL ENGINEER

The seal appearing on this document was authorized by JOSE G. REYES JR. P.E. 93827 on JUL. 29 20 09

REVISED 07/29/2009

NORTH FLOODWAY SOUTH LEVEE
(NFS1)
STRUCTURE NO. 149
STA 200+05.69

SHEET 41 OF 50

STATE	COUNTY	DRAWN BY:	CHECKED BY:	
TEXAS	HIDALGO	PROJECT NO. IBM09T0018		SHEET NO.
REHABILITATION OF NORTH FLOODWAY NORTH AND SOUTH LEVEES (FM 1015 TO BASELINE RD)				12.44

n:\project\u0450\u0450510 - lower rgfcp\scanned drawings\dgn structures\0450515\0450NFE15DRCV41.dgn

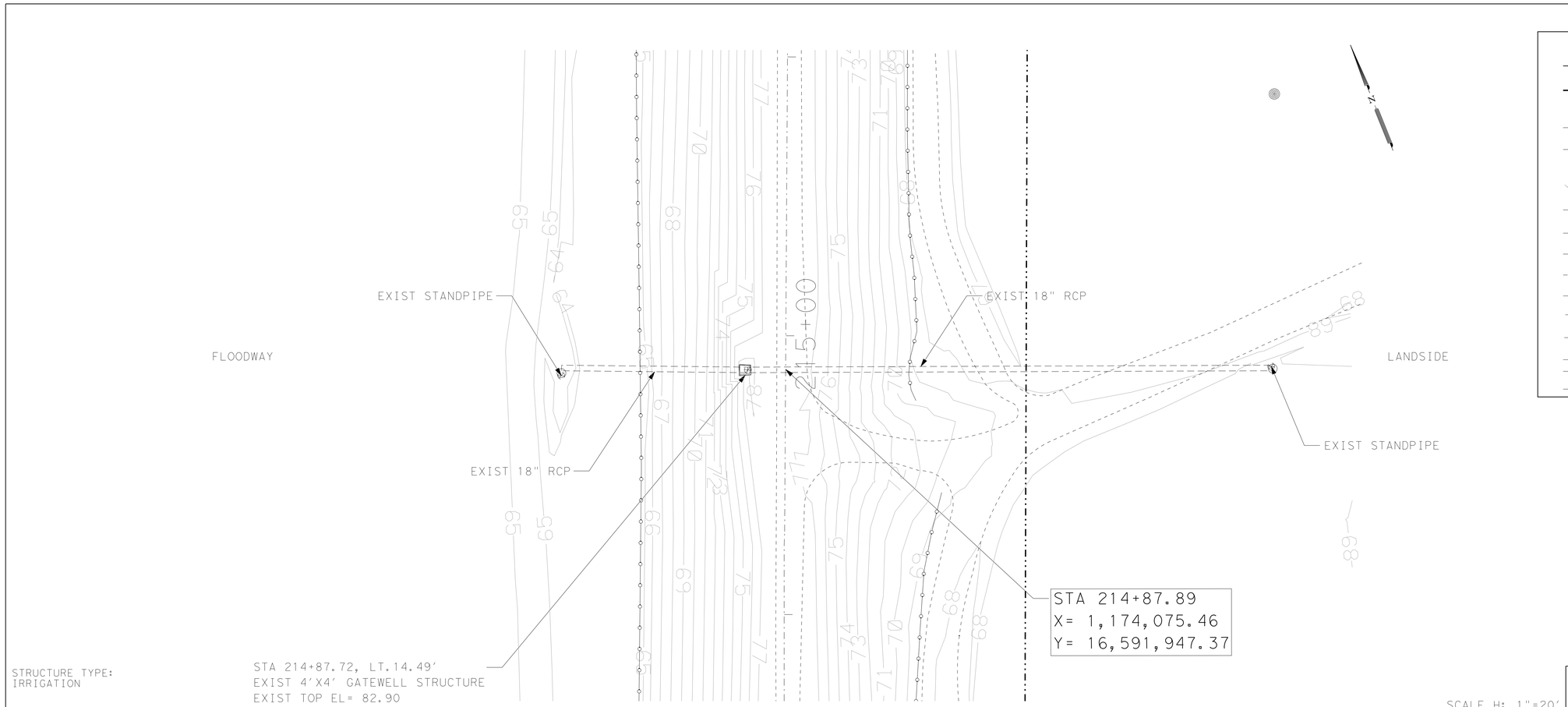

STRUCTURE TYPE:
IRRIGATION

SCALE H: 1"=20'
V: 1"=10'

PLAN VIEW LEGEND

- PROP CENTERLINE
- EXIST RIGHT-OF-WAY
- EXIST GEOTECHNICAL BORE
- EXIST FLOODWALL
- EL-OH — EXIST OVERHEAD UTILITY LINE
- EXIST SIGN
- 101 — EXIST CONTOURS
- EXIST LEVEE TOE
- F/O — EXIST FIBER OPTIC LINE
- GAS — EXIST GAS LINE
- W — EXIST WATER LINE
- T — EXIST TELEPHONE LINE
- X — X — EXIST FENCE
- PROP SEDIMENT CONTROL FENCE
- WATER BOUNDARY
- PROP LEVEE MAINTENANCE ROAD

NOTES:

1. CULVERT INFORMATION TAKEN FROM AS BUILT PROVIDED BY IBWC IF AVAILABLE.
2. CULVERTS WERE NOT CHECKED FOR HYDRAULICS ADEQUACY UNDER THIS TASK ORDER.
3. FOR GATEWELL ADJUSTMENT REFER TO SHEETS 12.58 & 12.59.
4. FOR CULVERT EXTENSION REFER TO SHEETS 12.60, & 12.61.
5. FOR CURB EXTENSION REFER TO SHEET 12.57.

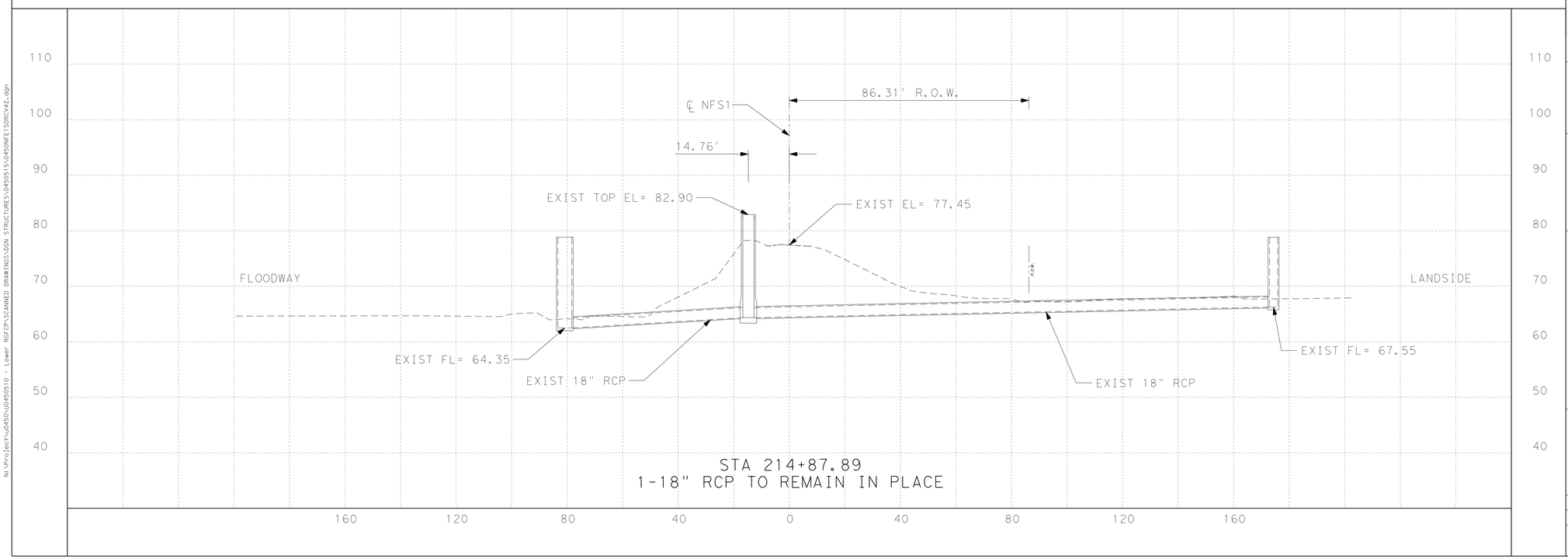

STA 214+87.89
1-18" RCP TO REMAIN IN PLACE

N:\Project\0450\0450510 - Lower RGFCP\SCANNED DRAWINGS\DGN STRUCTURES\0450515\0450NFE1SDRCV42.dgn

S&B INFRASTRUCTURE, LTD.
Engineering Management Technology
S&B Infrastructure, Ltd. Firm Registration Number: 1582

DL, INC.
DOS LOGISTICS, INC.
212 W. 3rd Sreet Weslaco, Tx. 78596
Phone: (956) 968-8800 Fax: (956) 447-8194
Dos Logistics, Inc. Firm Registration Number: F-9225

STATE OF TEXAS
JOSE G. REYES JR.
93827
LICENSED PROFESSIONAL ENGINEER
The seal appearing on this document was authorized by JOSE G. REYES JR. P.E. 93827
JUL 29 2009
P.E.

REVISED 07/29/2009

NORTH FLOODWAY SOUTH LEVEE (NFS1) STRUCTURE NO. 147A STA 214+87.89

SHEET 42 OF 50

STATE	COUNTY	DRAWN BY:	CHECKED BY:	
TEXAS	HIDALGO	PROJECT NO.	IBM09T0018	SHEET NO.
REHABILITATION OF NORTH FLOODWAY NORTH AND SOUTH LEVEES (FM 1015 TO BASELINE RD)				12.45

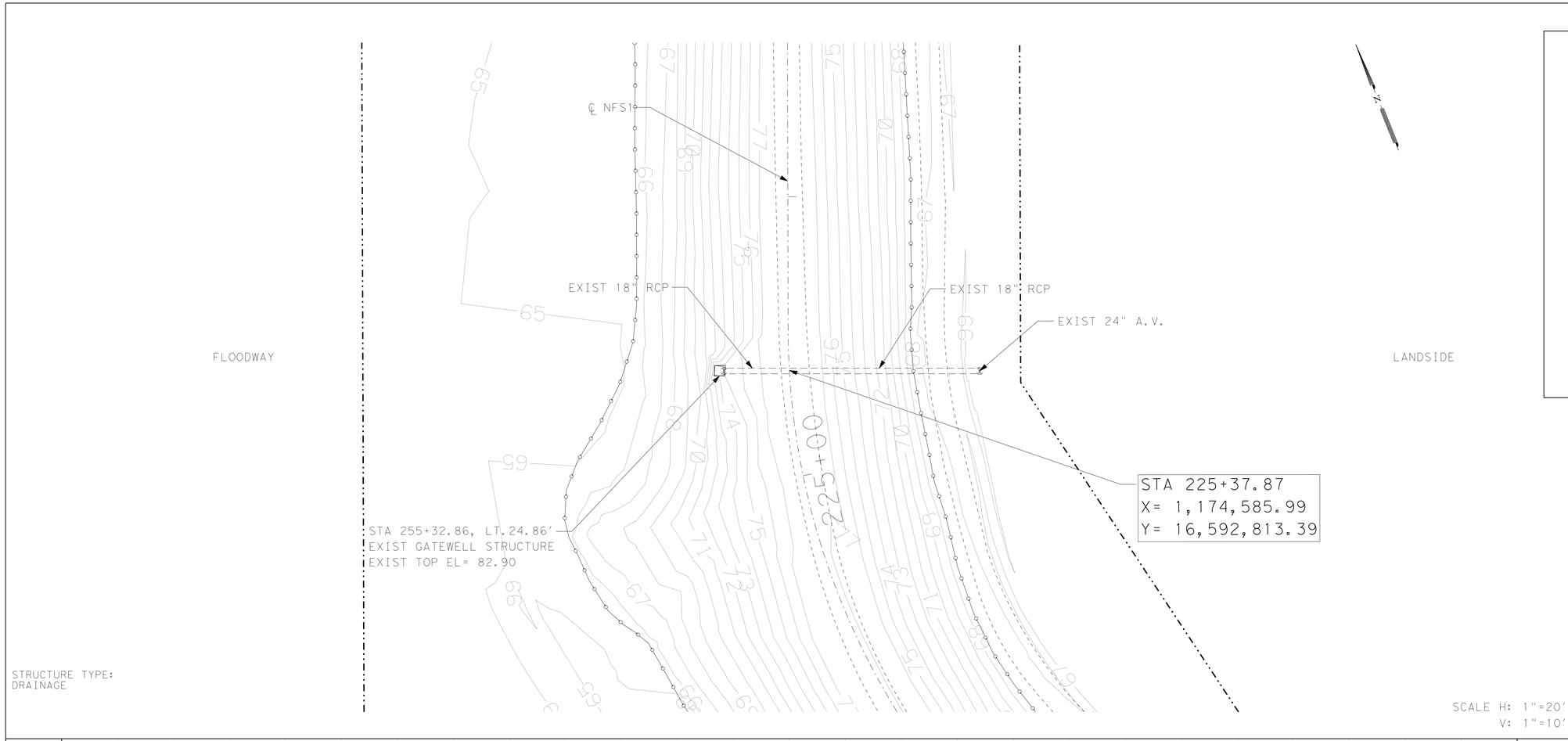

STRUCTURE TYPE:
DRAINAGE

SCALE H: 1"=20'
V: 1"=10'

PLAN VIEW LEGEND

- PROP CENTERLINE
- EXIST RIGHT-OF-WAY
- EXIST GEOTECHNICAL BORE
- EXIST FLOODWALL
- EL-OH — EXIST OVERHEAD UTILITY LINE
- EXIST SIGN
- 101 — EXIST CONTOURS
- EXIST LEVEE TOE
- F/O — EXIST FIBER OPTIC LINE
- GAS — EXIST GAS LINE
- W — EXIST WATER LINE
- T — EXIST TELEPHONE LINE
- X — EXIST FENCE
- PROP SEDIMENT CONTROL FENCE
- WATER BOUNDARY
- PROP LEVEE MAINTENANCE ROAD

NOTES:

1. CULVERT INFORMATION TAKEN FROM AS BUILT PROVIDED BY IBWC IF AVAILABLE.
2. CULVERTS WERE NOT CHECKED FOR HYDRAULICS ADEQUACY UNDER THIS TASK ORDER.
3. FOR GATEWELL ADJUSTMENT REFER TO SHEETS 12.58 & 12.59.
4. FOR CULVERT EXTENSION REFER TO SHEETS 12.60, & 12.61.
5. FOR CURB EXTENSION REFER TO SHEET 12.57.

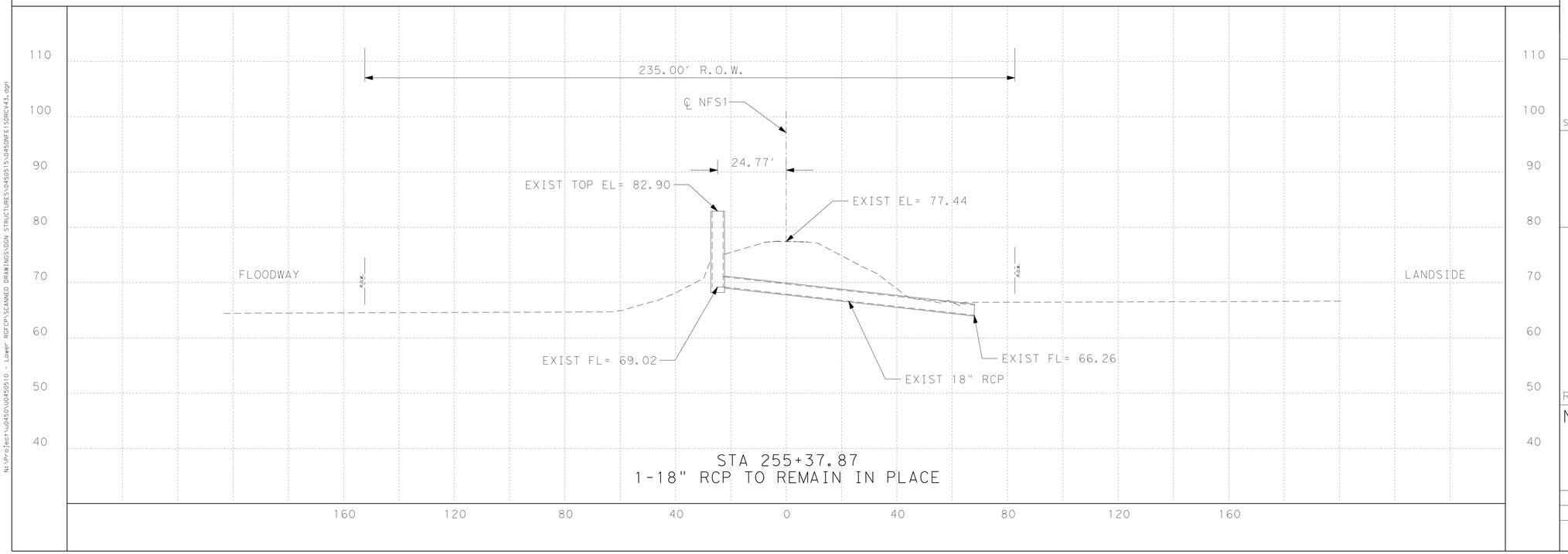

STA 255+37.87
1-18" RCP TO REMAIN IN PLACE

N:\Project\U0450\U0450510 - Lower RGFCP\SCANNED DRAWINGS\DGN STRUCTURES\U450515\U450NFE1SGRCV43.dgn

S&B INFRASTRUCTURE, LTD.
Engineering Management Technology
S&B Infrastructure, Ltd. Firm Registration Number: 1582

DL, INC.
DOS LOGISTICS, INC.
212 W. 3rd Sreet Phone: (956) 968-8800
Weslaco, Tx. 78596 Fax: (956) 447-8194
Dos Logistics, Inc. Firm Registration Number: F-9225

STATE OF TEXAS
JOSE G. REYES JR.
93827
LICENSED PROFESSIONAL ENGINEER

The seal appearing on this document was authorized by JOSE G. REYES JR. P.E. 93827 on JUL 29 20 09

REVISED 07/29/2009

NORTH FLOODWAY SOUTH LEVEE (NFS1)
STRUCTURE NO. 146B
STA 225+37.87

SHEET 43 OF 50

STATE	COUNTY	DRAWN BY:	CHECKED BY:	
TEXAS	HIDALGO	PROJECT NO.	IBM09T0018	SHEET NO.
REHABILITATION OF NORTH FLOODWAY NORTH AND SOUTH LEVEES (FM 1015 TO BASELINE RD)				12.46

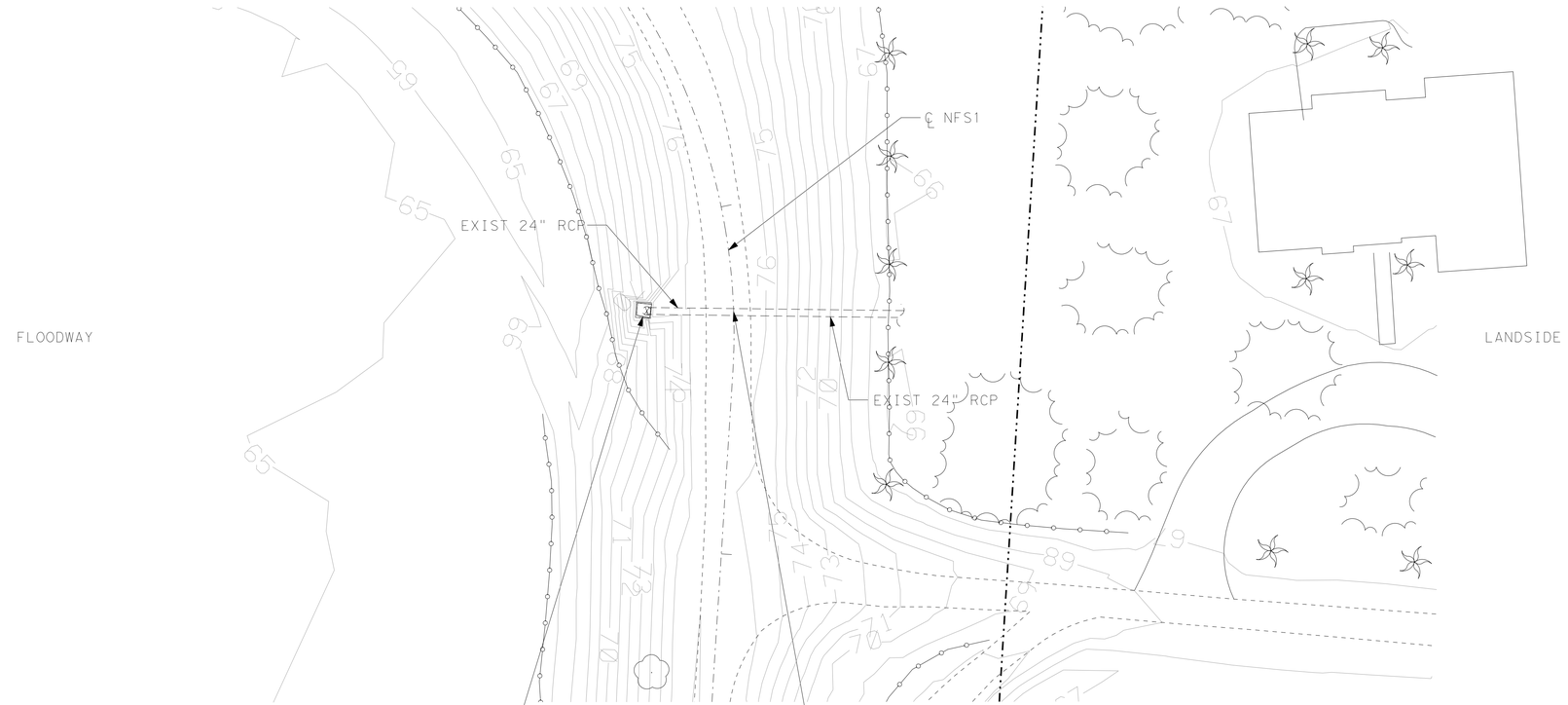

STRUCTURE TYPE:
DRAINAGE

SCALE: H: 1"=20'
V: 1"=10'

PLAN VIEW LEGEND

- PROP CENTERLINE
- EXIST RIGHT-OF-WAY
- EXIST GEOTECHNICAL BORE
- EXIST FLOODWALL
- EL-OH — EXIST OVERHEAD UTILITY LINE
- EXIST SIGN
- 101 — EXIST CONTOURS
- EXIST LEVEE TOE
- F/O — EXIST FIBER OPTIC LINE
- GAS — EXIST GAS LINE
- W — EXIST WATER LINE
- T — EXIST TELEPHONE LINE
- X — X — EXIST FENCE
- PROP SEDIMENT CONTROL FENCE
- WATER BOUNDARY
- PROP LEVEE MAINTENANCE ROAD

NOTES:

1. CULVERT INFORMATION TAKEN FROM AS BUILT PROVIDED BY IBWC IF AVAILABLE.
2. CULVERTS WERE NOT CHECKED FOR HYDRAULICS ADEQUACY UNDER THIS TASK ORDER.
3. FOR GATEWELL ADJUSTMENT REFER TO SHEETS 12.58 & 12.59.
4. FOR CULVERT EXTENSION REFER TO SHEETS 12.60, & 12.61.
5. FOR CURB EXTENSION REFER TO SHEET 12.57.

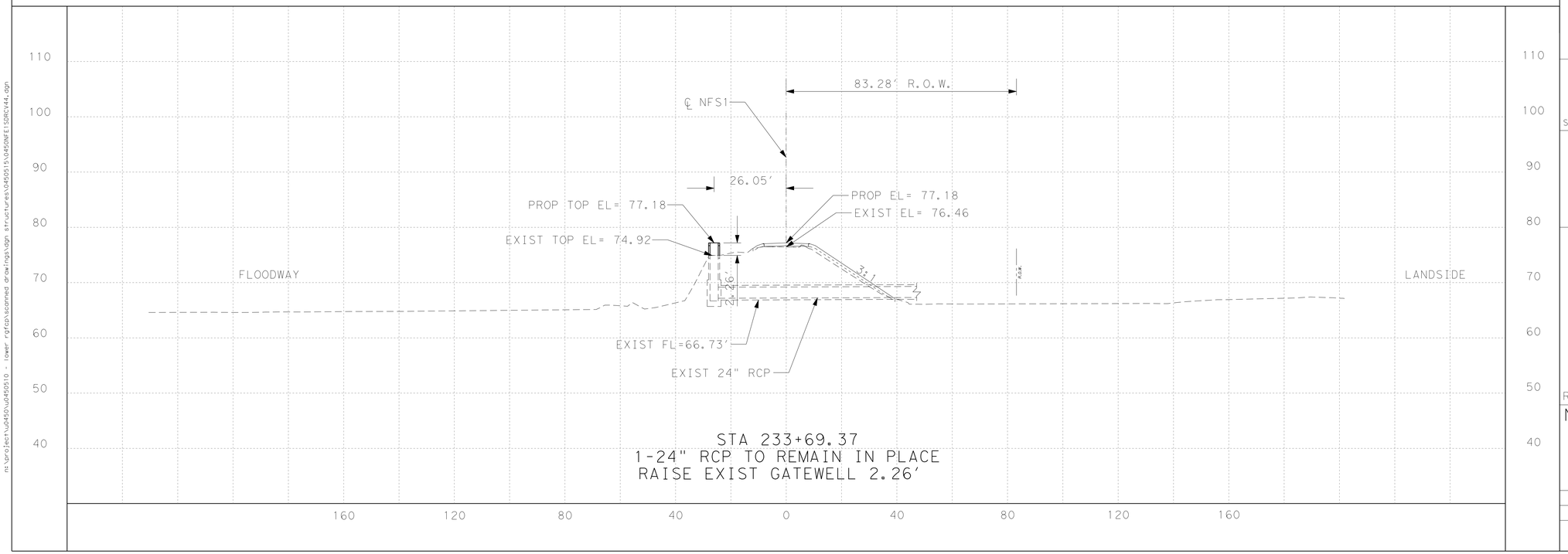

S&B INFRASTRUCTURE, LTD.
Engineering Management Technology
S&B Infrastructure, Ltd. Firm Registration Number: 1582

DL, INC.
DOS LOGISTICS, INC.
212 W. 3rd Sreet Phone: (956) 968-8800
Weslaco, Tx. 78596 Fax: (956) 447-8194
Dos Logistics, Inc. Firm Registration Number: F-9225

STATE OF TEXAS
JOSE G. REYES JR.
93827
LICENSED PROFESSIONAL ENGINEER

The seal appearing on this document was authorized by JOSE G. REYES JR. P.E. 93827
JUL 29 20 09
P.E.

REVISED 07/29/2009

NORTH FLOODWAY SOUTH LEVEE (NFS1) STRUCTURE NO. 146C STA 233+69.37

SHEET 44 OF 50

STATE	COUNTY	DRAWN BY:	CHECKED BY:	
TEXAS	HIDALGO	PROJECT NO. IBM09T0018		SHEET NO.
REHABILITATION OF NORTH FLOODWAY NORTH AND SOUTH LEVEES (FM 1015 TO BASELINE RD)				12.47

m:\project\p450\p450510 - lower rgfcp\scanned drawings\dgn structures\0450515\0450NFESDRCV44.dgn

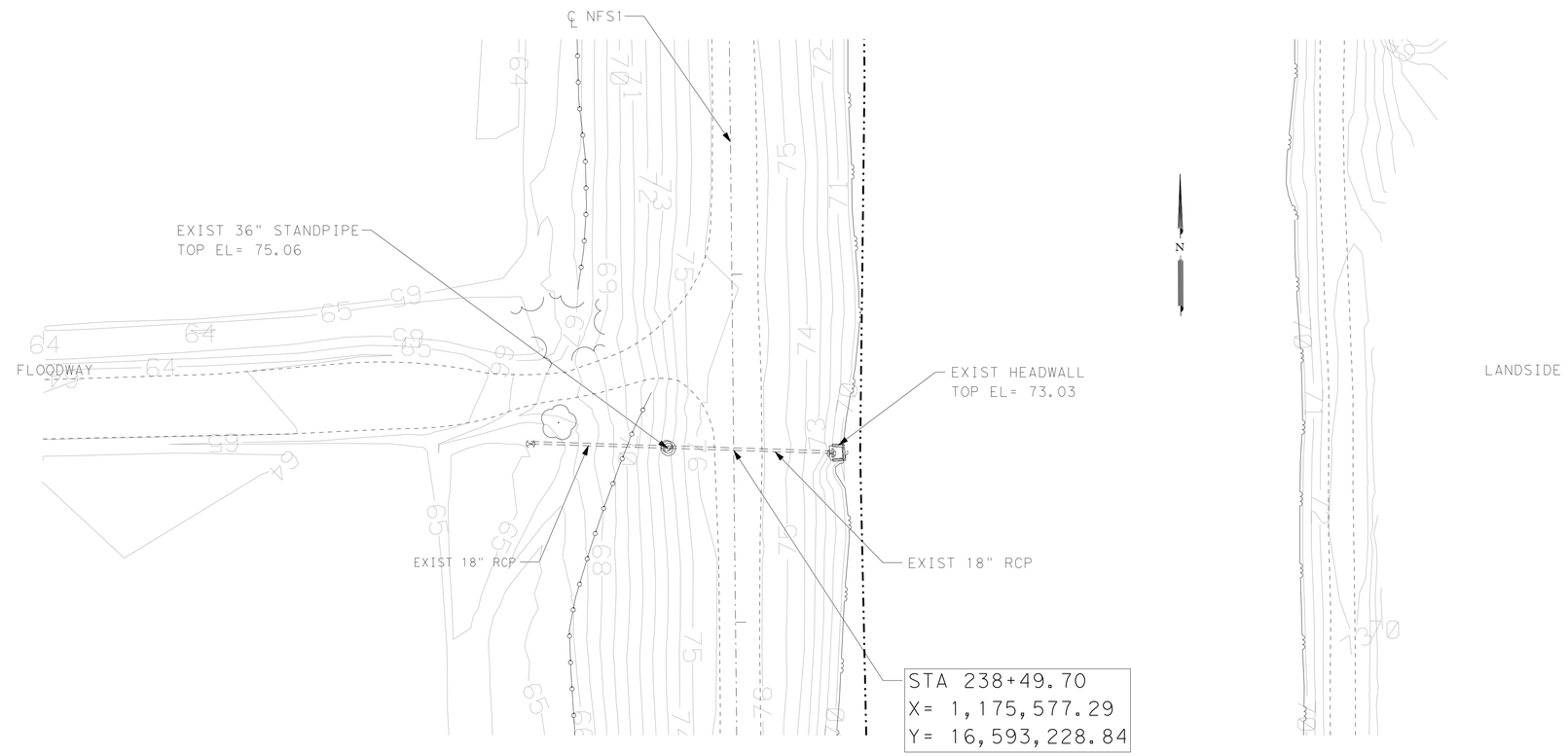

STRUCTURE TYPE:
DRAINAGE

SCALE: H: 1"=20'
V: 1"=10'

PLAN VIEW LEGEND

- PROP CENTERLINE
- EXIST RIGHT-OF-WAY
- EXIST GEOTECHNICAL BORE
- EXIST FLOODWALL
- EL-OH — EXIST OVERHEAD UTILITY LINE
- EXIST SIGN
- 101 — EXIST CONTOURS
- EXIST LEVEE TOE
- F/O — EXIST FIBER OPTIC LINE
- GAS — EXIST GAS LINE
- W — EXIST WATER LINE
- T — EXIST TELEPHONE LINE
- X — EXIST FENCE
- PROP SEDIMENT CONTROL FENCE
- WATER BOUNDARY
- PROP LEVEE MAINTENANCE ROAD

NOTES:

1. CULVERT INFORMATION TAKEN FROM AS BUILT PROVIDED BY IBWC IF AVAILABLE.
2. CULVERTS WERE NOT CHECKED FOR HYDRAULICS ADEQUACY UNDER THIS TASK ORDER.
3. FOR GATEWELL ADJUSTMENT REFER TO SHEETS 12.58 & 12.59.
4. FOR CULVERT EXTENSION REFER TO SHEETS 12.60, & 12.61.
5. FOR CURB EXTENSION REFER TO SHEET 12.57.

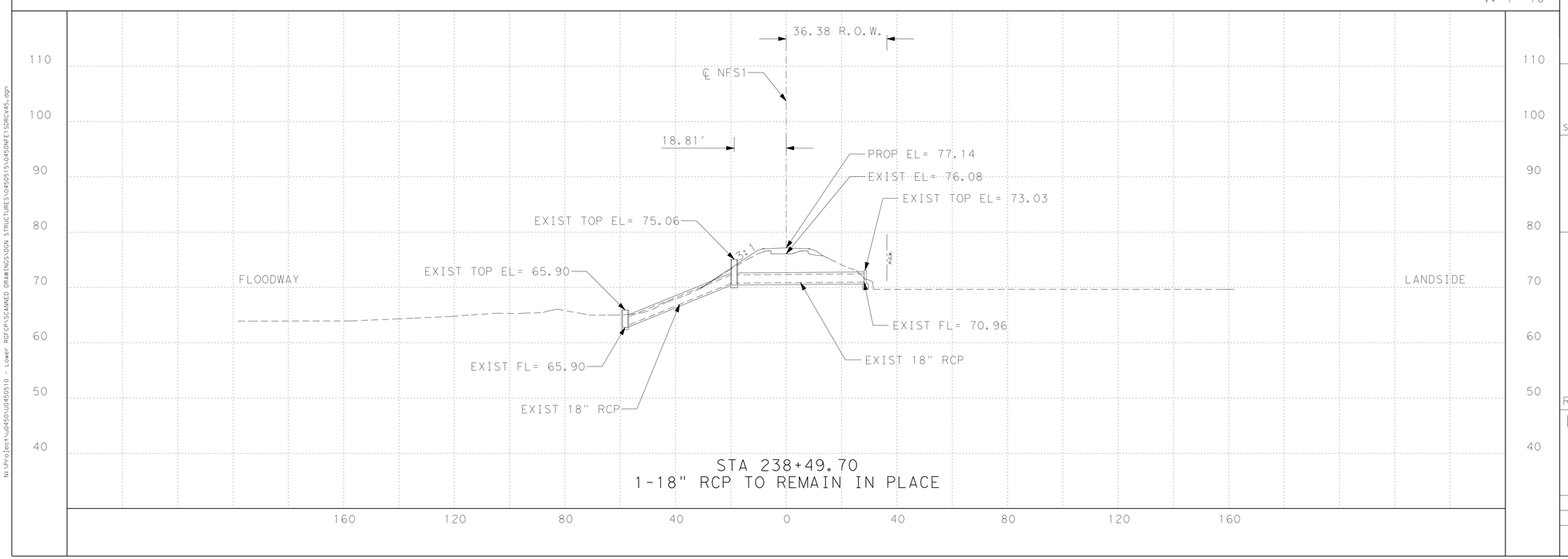

STA 238+49.70
1-18" RCP TO REMAIN IN PLACE

N:\Project\u0450\U0450510 - Lower RGFCP\SCANNED DRAWINGS\DGN STRUCTURES\0450515\0450NFESDRCV45.dgn

S&B INFRASTRUCTURE, LTD.
Engineering Management Technology
S&B Infrastructure, Ltd. Firm Registration Number: 1582

DL, INC.
DOS LOGISTICS, INC.
212 W. 3rd Sreet
Weslaco, Tx. 78596
Phone: (956) 968-8800
Fax: (956) 447-8194
Dos Logistics, Inc. Firm Registration Number: F-9225

STATE OF TEXAS
JOSE G. REYES JR.
93827
LICENSED
PROFESSIONAL ENGINEER

The seal appearing on this document was authorized by JOSE G. REYES JR. P.E. 93827 on JUL 29 2009

REVISED 07/29/2009

NORTH FLOODWAY SOUTH LEVEE (NFS1) STRUCTURE NO. 146A STA 238+49.70

SHEET 45 OF 50

STATE	COUNTY	DRAWN BY:	CHECKED BY:	
TEXAS	HIDALGO	PROJECT NO.	IBM09T0018	SHEET NO.
REHABILITATION OF NORTH FLOODWAY NORTH AND SOUTH LEVEES (FM 1015 TO BASELINE RD)				12.48

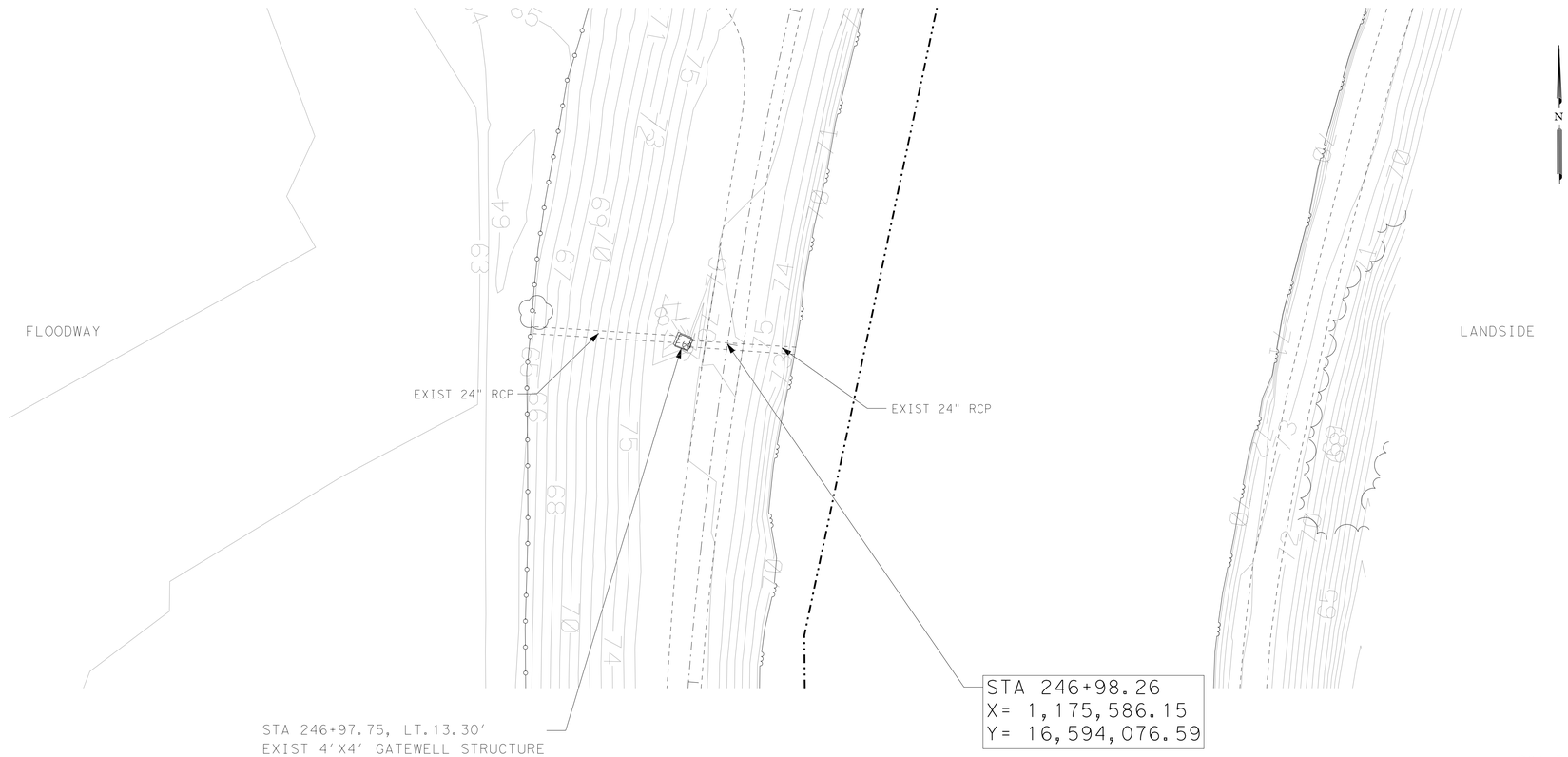

STRUCTURE TYPE:
DRAINAGE

SCALE: H: 1"=20'
V: 1"=10'

PLAN VIEW LEGEND

- PROP CENTERLINE
- EXIST RIGHT-OF-WAY
- EXIST GEOTECHNICAL BORE
- EXIST FLOODWALL
- EL-OH — EXIST OVERHEAD UTILITY LINE
- EXIST SIGN
- 101 — EXIST CONTOURS
- EXIST LEVEE TOE
- F/O — EXIST FIBER OPTIC LINE
- GAS — EXIST GAS LINE
- W — EXIST WATER LINE
- T — EXIST TELEPHONE LINE
- X — EXIST FENCE
- PROP SEDIMENT CONTROL FENCE
- WATER BOUNDARY
- PROP LEVEE MAINTENANCE ROAD

NOTES:

1. CULVERT INFORMATION TAKEN FROM AS BUILT PROVIDED BY IBWC IF AVAILABLE.
2. CULVERTS WERE NOT CHECKED FOR HYDRAULICS ADEQUACY UNDER THIS TASK ORDER.
3. FOR GATEWELL ADJUSTMENT REFER TO SHEETS 12.58 & 12.59.
4. FOR CULVERT EXTENSION REFER TO SHEETS 12.60, & 12.61.
5. FOR CURB EXTENSION REFER TO SHEET 12.57.

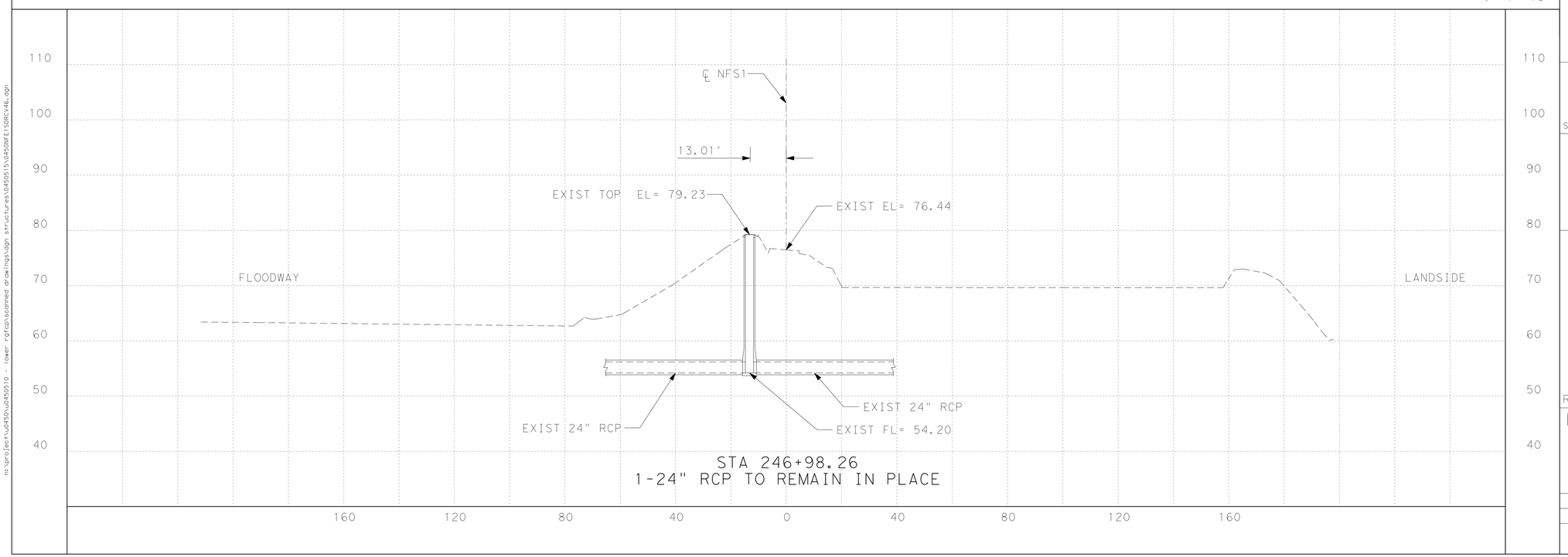

S&B INFRASTRUCTURE, LTD.
Engineering Management Technology
S&B Infrastructure, Ltd. Firm Registration Number: 1582

DL, INC.
DOS LOGISTICS, INC.
212 W. 3rd Sreet
Weslaco, Tx. 78596
Phone: (956) 968-8800
Fax: (956) 447-8194
Dos Logistics, Inc. Firm Registration Number: F-9225

STATE OF TEXAS
JOSE G. REYES JR.
93827
LICENSED
PROFESSIONAL ENGINEER

The seal appearing on this document was authorized by JOSE G. REYES JR. P.E. 93827 on JUL. 29, 2009

REVISED 07/29/2009

NORTH FLOODWAY SOUTH LEVEE (NFS1)
STRUCTURE NO. 146
STA 246+98.26

SHEET 46 OF 50

STATE	COUNTY	DRAWN BY:	CHECKED BY:	
TEXAS	HIDALGO	PROJECT NO.	IBM09T0018	SHEET NO.

REHABILITATION OF NORTH FLOODWAY
NORTH AND SOUTH LEVEES
(FM 1015 TO BASELINE RD)

12.49

n:\project\u0450\u0450510 - lower rgfcp\scanned drawings\dgn structures\0450515\0450NFE1SDRCV46.dgn

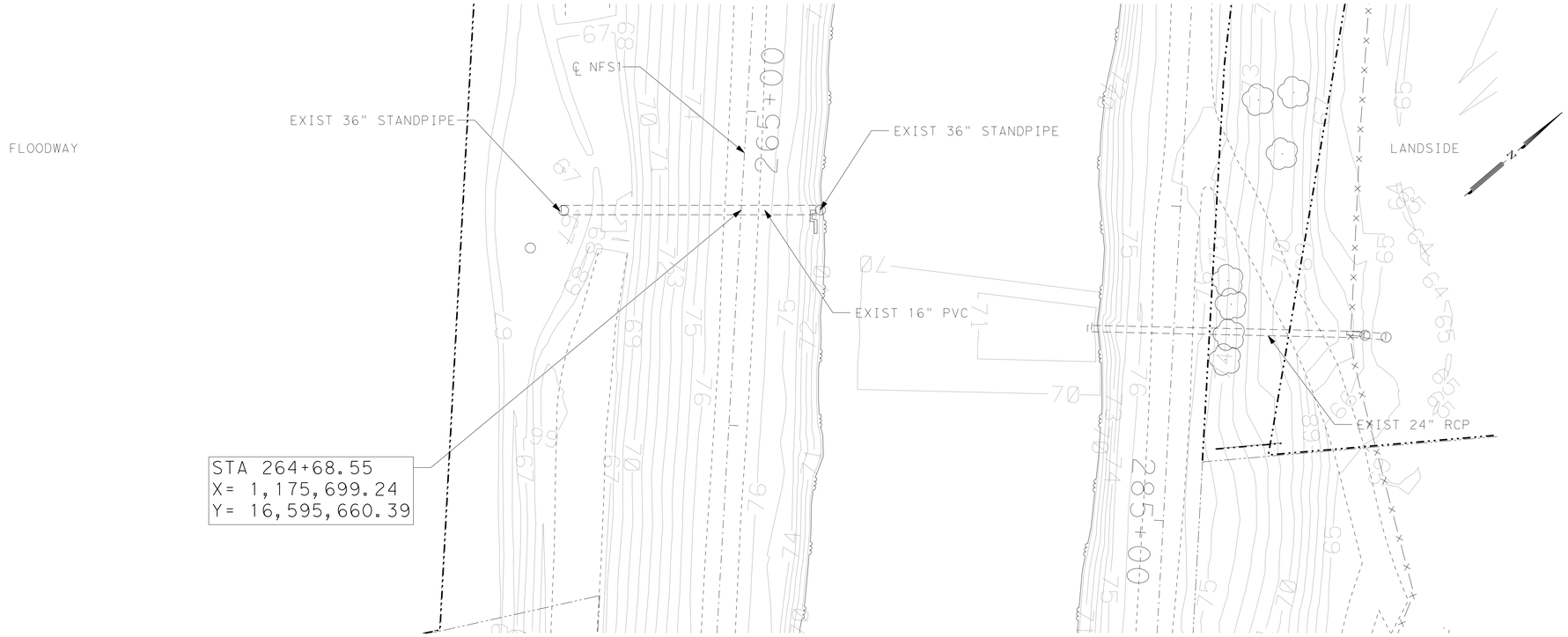

STRUCTURE TYPE:
IRRIGATION

SCALE H: 1"=20'
V: 1"=10'

PLAN VIEW LEGEND

- PROP CENTERLINE
- EXIST RIGHT-OF-WAY
- EXIST GEOTECHNICAL BORE
- EXIST FLOODWALL
- EL-OH — EXIST OVERHEAD UTILITY LINE
- EXIST SIGN
- 101 — EXIST CONTOURS
- EXIST LEVEE TOE
- F/O — EXIST FIBER OPTIC LINE
- GAS — EXIST GAS LINE
- W — EXIST WATER LINE
- T — EXIST TELEPHONE LINE
- X — EXIST FENCE
- PROP SEDIMENT CONTROL FENCE
- WATER BOUNDARY
- PROP LEVEE MAINTENANCE ROAD

NOTES:

1. CULVERT INFORMATION TAKEN FROM AS BUILT PROVIDED BY IBWC IF AVAILABLE.
2. CULVERTS WERE NOT CHECKED FOR HYDRAULICS ADEQUACY UNDER THIS TASK ORDER.
3. FOR GATEWELL ADJUSTMENT REFER TO SHEETS 12.58 & 12.59.
4. FOR CULVERT EXTENSION REFER TO SHEETS 12.60, & 12.61.
5. FOR CURB EXTENSION REFER TO SHEET 12.57.

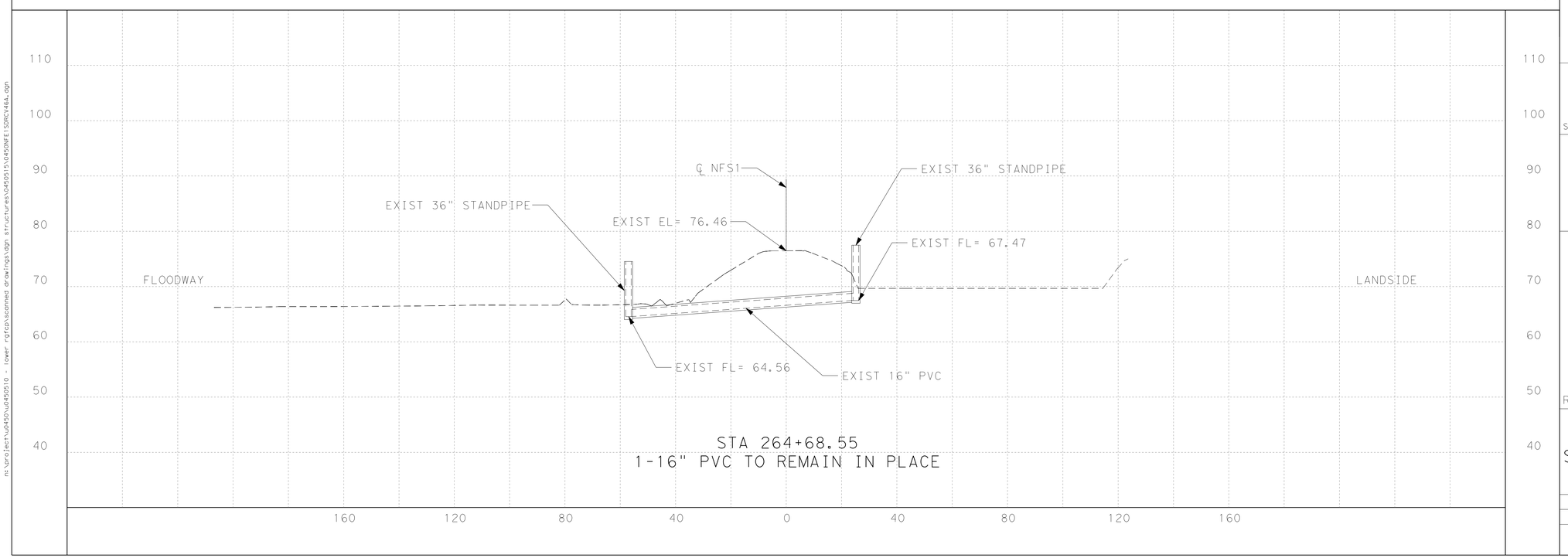

S&B INFRASTRUCTURE, LTD.
Engineering Management Technology
S&B Infrastructure, Ltd. Firm Registration Number: 1582

DL, INC.
DOS LOGISTICS, INC.
212 W. 3rd Sreet Phone: (956) 968-8800
Weslaco, Tx. 78596 Fax: (956) 447-8194
Dos Logistics, Inc. Firm Registration Number: F-9225

STATE OF TEXAS
JOSE G. REYES JR.
93827
LICENSED PROFESSIONAL ENGINEER

The seal appearing on this document was authorized by JOSE G. REYES JR. P.E. 93827 on JUL. 29, 2009

REVISED 07/29/2009

NORTH FLOODWAY SOUTH LEVEE (NFS1)
STRUCTURE NO. BTWN 146&145-A
STA 264+68.55

SHEET 47 OF 50

STATE	COUNTY	DRAWN BY:	CHECKED BY:	
TEXAS	HIDALGO	PROJECT NO.	IBM09T0018	SHEET NO.
REHABILITATION OF NORTH FLOODWAY NORTH AND SOUTH LEVEES (FM 1015 TO BASELINE RD)				12.50

m:\project\0450\0450510 - lower rgfcp\scanned drawings\dgn structures\0450515\0450NFE1SDRCV464.dgn

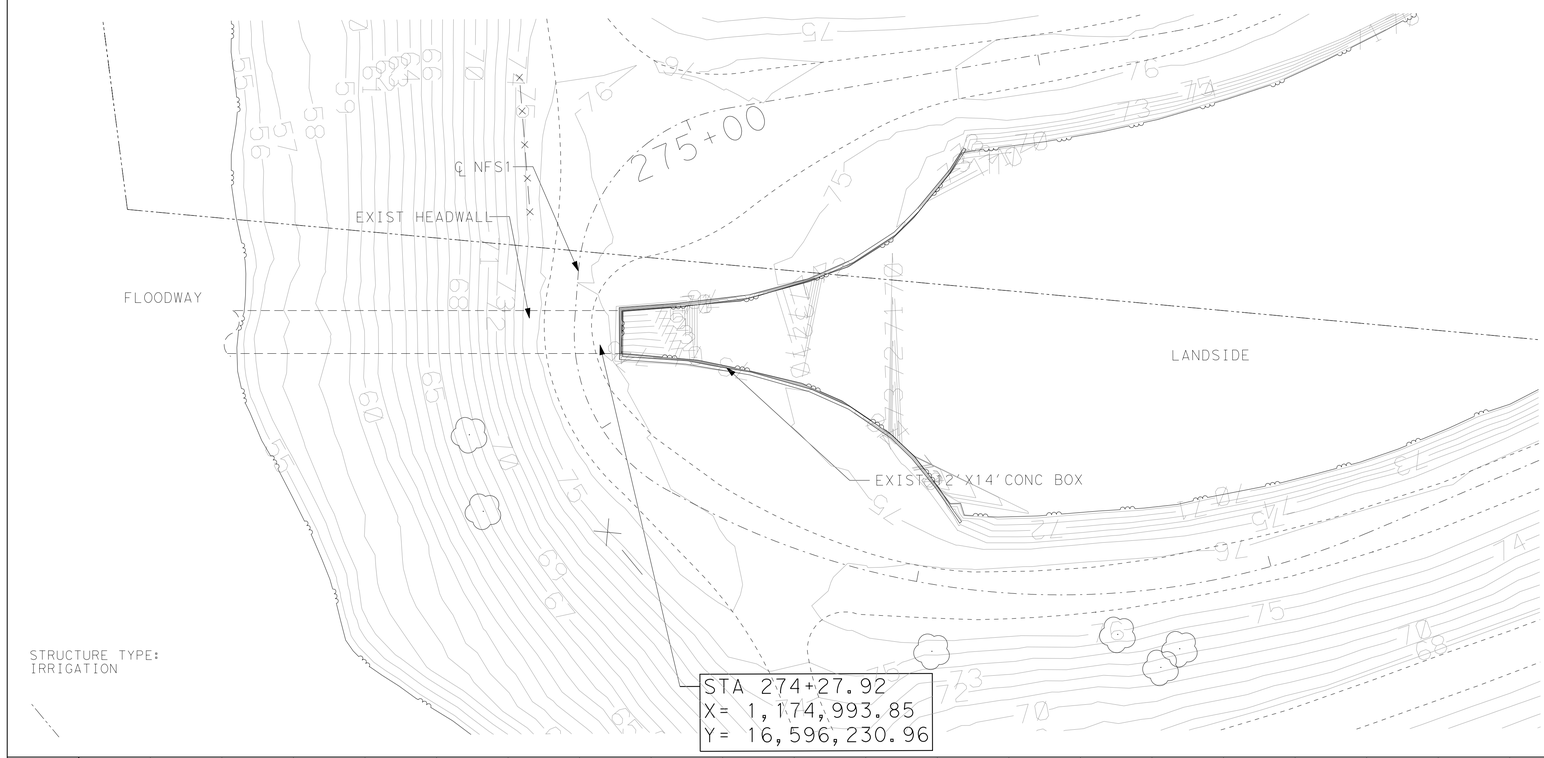

STRUCTURE TYPE:
IRRIGATION

SCALE H: 1"=20'
V: 1"=10'

PLAN VIEW LEGEND

- PROP CENTERLINE
- EXIST RIGHT-OF-WAY
- EXIST GEOTECHNICAL BORE
- EXIST FLOODWALL
- EL-OH — EXIST OVERHEAD UTILITY LINE
- EXIST SIGN
- 101 — EXIST CONTOURS
- EXIST LEVEE TOE
- F/O — EXIST FIBER OPTIC LINE
- GAS — EXIST GAS LINE
- W — EXIST WATER LINE
- T — EXIST TELEPHONE LINE
- X — EXIST FENCE
- PROP SEDIMENT CONTROL FENCE
- WATER BOUNDARY
- PROP LEVEE MAINTENANCE ROAD

NOTES:

1. CULVERT INFORMATION TAKEN FROM AS BUILT PROVIDED BY IBWC IF AVAILABLE.
2. CULVERTS WERE NOT CHECKED FOR HYDRAULICS ADEQUACY UNDER THIS TASK ORDER.
3. FOR GATEWELL ADJUSTMENT REFER TO SHEETS 12.58 & 12.59.
4. FOR CULVERT EXTENSION REFER TO SHEETS 12.60, & 12.61.
5. FOR CURB EXTENSION REFER TO SHEET 12.57.

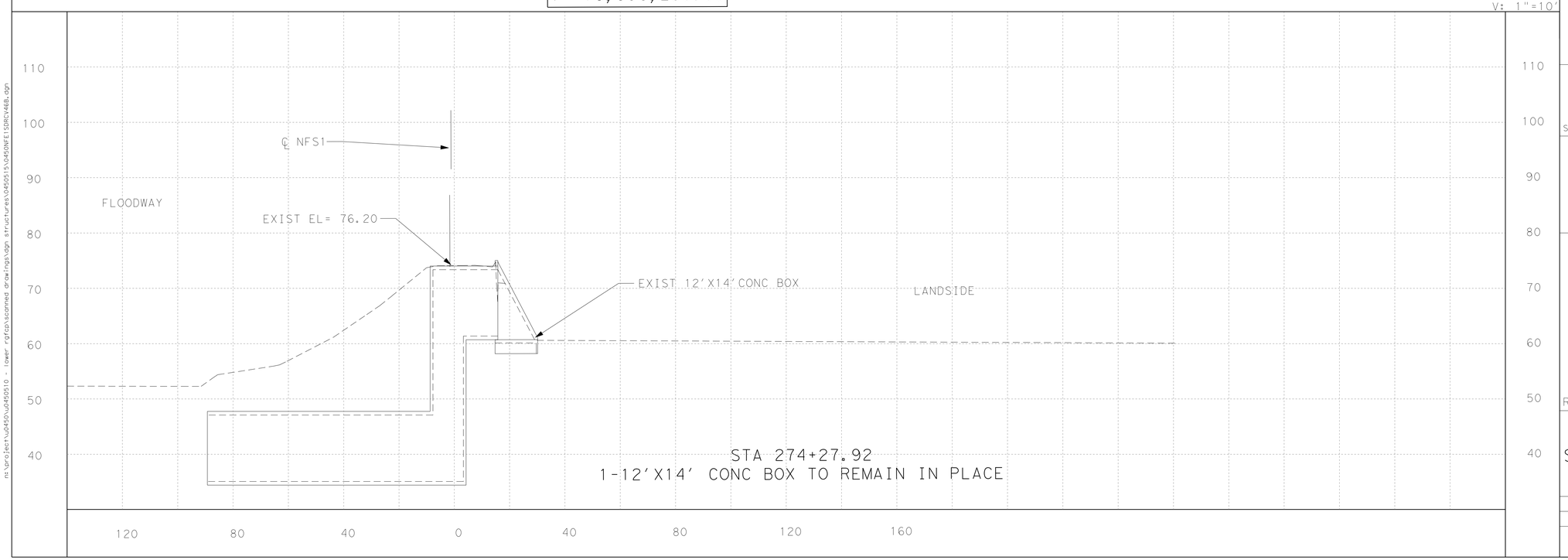

n:\project\u0450\u0450510 - lower rgfcp\scanned drawings\dgn structures\045051S\0450NFE1SDRCV46B.dgn

S&B INFRASTRUCTURE, LTD.
Engineering Management Technology
S&B Infrastructure, Ltd. Firm Registration Number: 1582

DL, INC.
DOS LOGISTICS, INC.
212 W. 3rd Sreet
Weslaco, Tx. 78596
Phone: (956) 968-8800
Fax: (956) 447-8194
Dos Logistics, Inc. Firm Registration Number: F-9225

STATE OF TEXAS
JOSE G. REYES JR.
93827
LICENSED
PROFESSIONAL ENGINEER

The seal appearing on this document was authorized by JOSE G. REYES JR. P.E. 93827 on JUL 29 20 09

REVISED 07/29/2009

NORTH FLOODWAY SOUTH LEVEE
(NFS1)
STRUCTURE NO. BTWN 146&145-B
STA 274+27.92

SHEET 48 OF 50

STATE	COUNTY	DRAWN BY:	CHECKED BY:	
TEXAS	HIDALGO	PROJECT NO. IBM09T0018		SHEET NO.
REHABILITATION OF NORTH FLOODWAY NORTH AND SOUTH LEVEES (FM 1015 TO BASELINE RD)				12.51

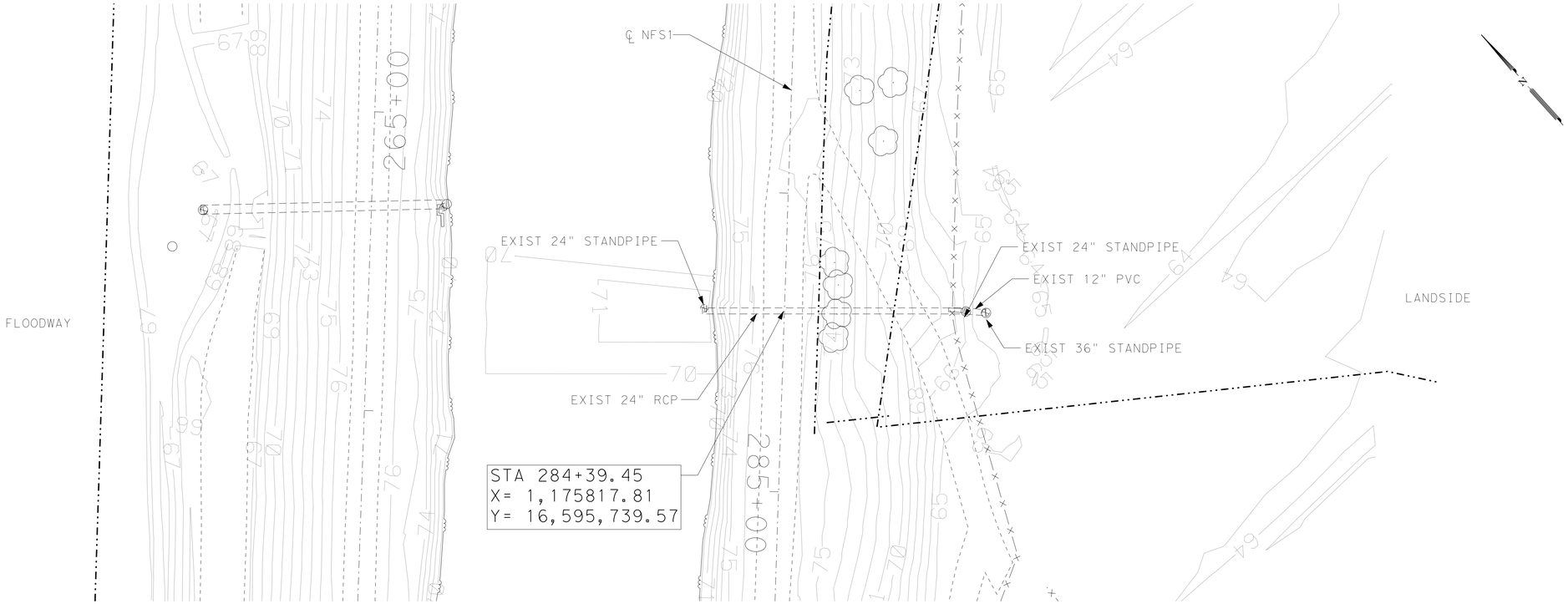

STRUCTURE TYPE:
IRRIGATION

SCALE H: 1"=20'
V: 1"=10'

PLAN VIEW LEGEND

- PROP CENTERLINE
- EXIST RIGHT-OF-WAY
- EXIST GEOTECHNICAL BORE
- EXIST FLOODWALL
- EL-OH — EXIST OVERHEAD UTILITY LINE
- EXIST SIGN
- 101 — EXIST CONTOURS
- EXIST LEVEE TOE
- F/O — EXIST FIBER OPTIC LINE
- GAS — EXIST GAS LINE
- W — EXIST WATER LINE
- T — EXIST TELEPHONE LINE
- X — X — EXIST FENCE
- PROP SEDIMENT CONTROL FENCE
- WATER BOUNDARY
- PROP LEVEE MAINTENANCE ROAD

NOTES:

1. CULVERT INFORMATION TAKEN FROM AS BUILT PROVIDED BY IBWC IF AVAILABLE.
2. CULVERTS WERE NOT CHECKED FOR HYDRAULICS ADEQUACY UNDER THIS TASK ORDER.
3. FOR GATEWELL ADJUSTMENT REFER TO SHEETS 12.58 & 12.59.
4. FOR CULVERT EXTENSION REFER TO SHEETS 12.60, & 12.61.
5. FOR CURB EXTENSION REFER TO SHEET 12.57.

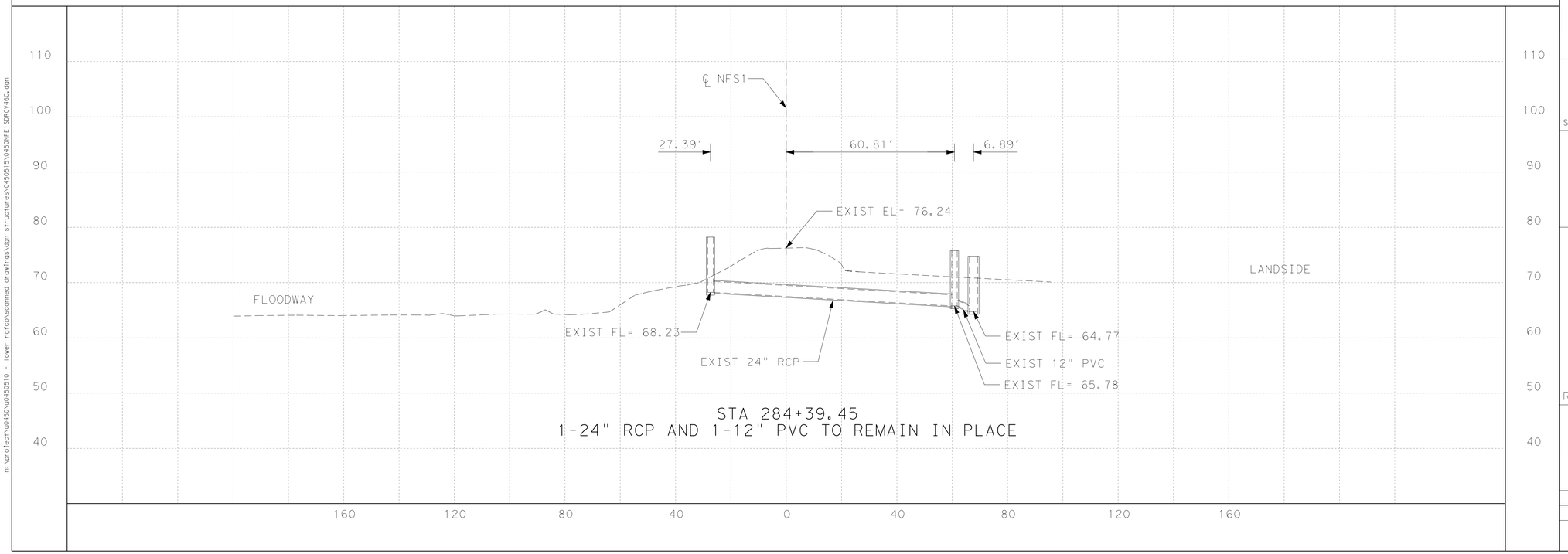

S&B INFRASTRUCTURE, LTD.
Engineering Management Technology
S&B Infrastructure, Ltd. Firm Registration Number: 1582

DL, INC.
DOS LOGISTICS, INC.
212 W. 3rd Sreet
Weslaco, Tx. 78596
Phone: (956) 968-8800
Fax: (956) 447-8194
Dos Logistics, Inc. Firm Registration Number: F-9225

STATE OF TEXAS
JOSE G. REYES JR.
93827
LICENSED
PROFESSIONAL ENGINEER

The seal appearing on this document was authorized by JOSE G. REYES JR. P.E. 93827 on JUL 29 20 09

P.E.

REVISED 07/29/2009

NORTH FLOODWAY SOUTH LEVEE (NFS1)
STRUCTURE NO. BTWN 146&145-C
STA 284+39.45

SHEET 49 OF 50

STATE	COUNTY	DRAWN BY:	CHECKED BY:	
TEXAS	HIDALGO	PROJECT NO.	IBM09T0018	SHEET NO.
REHABILITATION OF NORTH FLOODWAY NORTH AND SOUTH LEVEES (FM 1015 TO BASELINE RD)				12.52

n:\project\u2450\u2450510 - lower rgfcp\scanned drawings\dgn structures\U450515\U450NFE1SDRCV46C.dgn

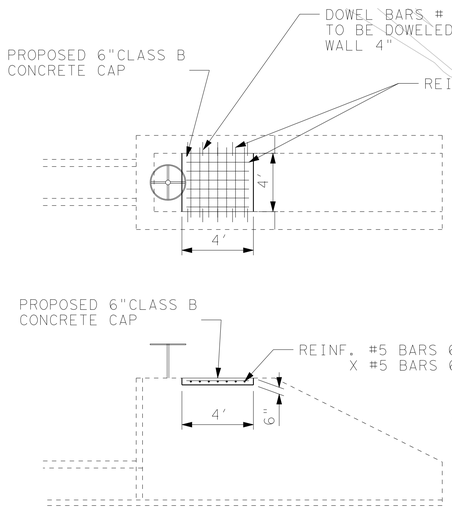

CONCRETE CAP SECTION

CONC (CY)	REBAR (LBS)
0.30	61.00

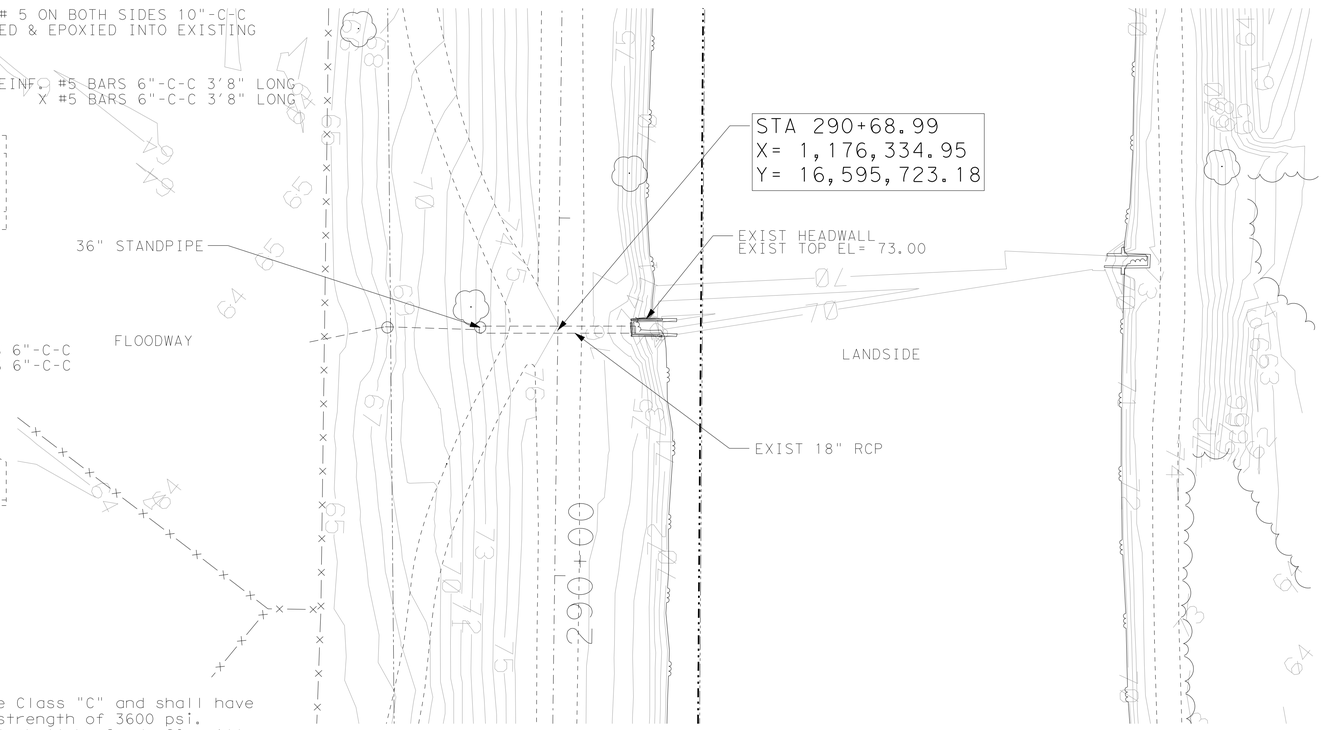

GENERAL NOTES:

All concrete shall be Class "C" and shall have a minimum compressive strength of 3600 psi.

All reinforcing steel shall be Grade 60. All reinforcing shall be adjusted as necessary to provide a minimum clear cover of 1 ¼".

The quantities for concrete, reinforcing steel, and herein are for Contractor's information only.

STRUCTURE TYPE:
IRRIGATION

PLAN VIEW LEGEND

- PROP CENTERLINE
- EXIST RIGHT-OF-WAY
- EXIST GEOTECHNICAL BORE
- EXIST FLOODWALL
- EL-OH — EXIST OVERHEAD UTILITY LINE
- EXIST SIGN
- 101 — EXIST CONTOURS
- EXIST LEVEE TOE
- F/O — EXIST FIBER OPTIC LINE
- GAS — EXIST GAS LINE
- W — EXIST WATER LINE
- T — EXIST TELEPHONE LINE
- X — X — EXIST FENCE
- PROP SEDIMENT CONTROL FENCE
- WATER BOUNDARY
- PROP LEVEE MAINTENANCE ROAD

NOTES:

1. CULVERT INFORMATION TAKEN FROM AS BUILT PROVIDED BY IBWC IF AVAILABLE.
2. CULVERTS WERE NOT CHECKED FOR HYDRAULICS ADEQUACY UNDER THIS TASK ORDER.
3. FOR GATEWELL ADJUSTMENT REFER TO SHEETS 12.58 & 12.59.
4. FOR CULVERT EXTENSION REFER TO SHEETS 12.60, & 12.61.
5. FOR CURB EXTENSION REFER TO SHEET 12.57.

SCALE: H: 1"=20'
V: 1"=10'

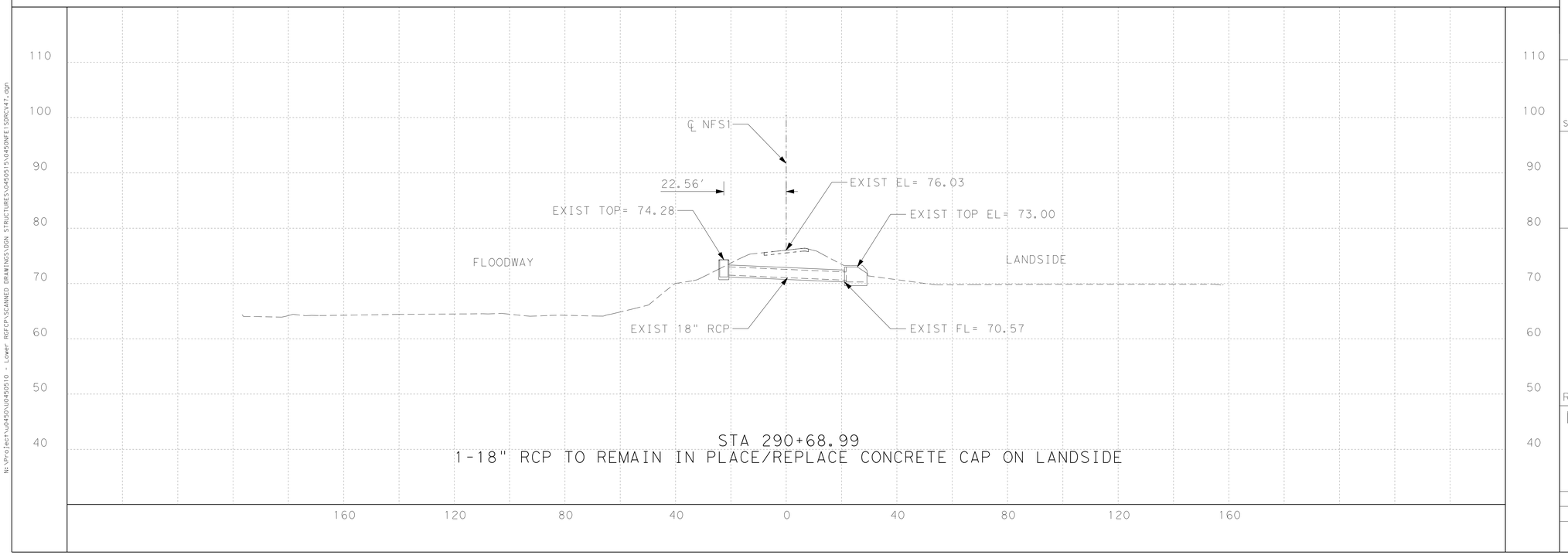

STA 290+68.99
1-18" RCP TO REMAIN IN PLACE/REPLACE CONCRETE CAP ON LANDSIDE

S&B INFRASTRUCTURE, LTD.
Engineering Management Technology
S&B Infrastructure, Ltd. Firm Registration Number: 1582

DL, INC.
DOS LOGISTICS, INC.
212 W. 3rd Sreet Weslaco, Tx. 78596
Phone: (956) 968-8800 Fax: (956) 447-8194
Dos Logistics, Inc. Firm Registration Number: F-9225

STATE OF TEXAS
JOSE G. REYES JR.
93827
LICENSED PROFESSIONAL ENGINEER

The seal appearing on this document was authorized by JOSE G. REYES JR. P.E. 93827 on JUL 29 20 09

REVISED 07/29/2009

NORTH FLOODWAY SOUTH LEVEE
(NFS1)
STRUCTURE NO. 145
STA 290+68.99

SHEET 50 OF 50

STATE	COUNTY	DRAWN BY:	CHECKED BY:	
TEXAS	HIDALGO	PROJECT NO. IBM09T0018		SHEET NO.
REHABILITATION OF NORTH FLOODWAY NORTH AND SOUTH LEVEES (FM 1015 TO BASELINE RD)				12.53

N:\Project\u0450\U0450510 - Lower RGFCP\SCANNED DRAWINGS\DGN STRUCTURES\0450515\0450NFE1SDRCV47.dgn

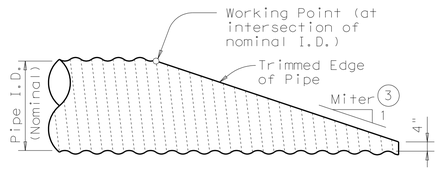

NOTE: All Pipe Runners, calculations, and dimensions are based on the pipe culverts mitered as shown in this detail. Alternate styles of mitered ends will require that appropriate adjustments be made to the values presented on this standard.

SIDE ELEVATION OF TYPICAL PIPE CULVERT MITER

(Showing Corrugated Metal Pipe Culvert. Details of Concrete Pipe Culvert are similar.)

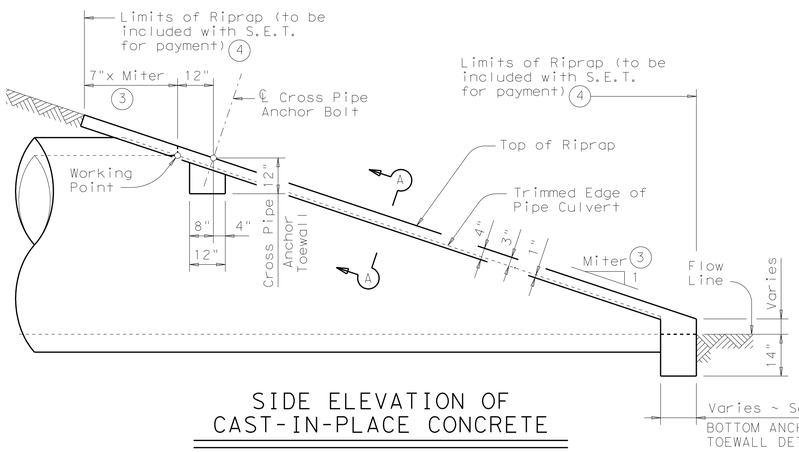

SIDE ELEVATION OF CAST-IN-PLACE CONCRETE

(Showing Concrete Pipe Culvert. Details of Corrugated Metal Pipe Culvert are similar. Pipe Runners not shown for clarity)

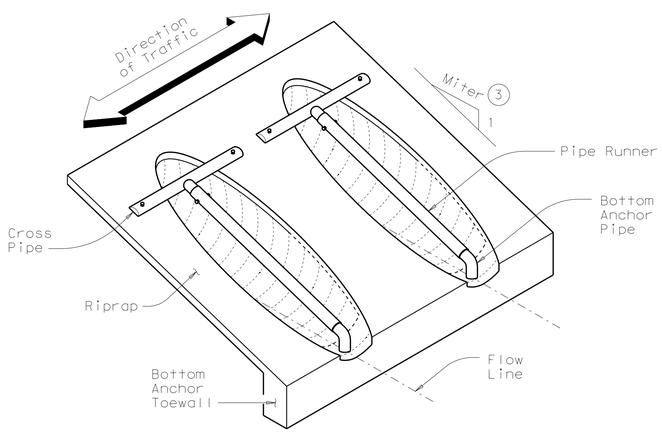

ISOMETRIC VIEW OF TYPICAL INSTALLATION

(Showing installation with no skew.)

CROSS PIPE LENGTHS & PIPE RUNNER LENGTHS (1)(2)

Nominal Culvert I.D.	Pipe Culvert Spa ~ G	Cross Pipe Length	Pipe Runner Length											
			3:1 Side Slope				4:1 Side Slope				6:1 Side Slope			
			0° Skew	15° Skew	30° Skew	45° Skew	0° Skew	15° Skew	30° Skew	45° Skew	0° Skew	15° Skew	30° Skew	45° Skew
24"	1'- 7"	3'- 5"	N/A	N/A	N/A	5'-10"	N/A	N/A	N/A	8'- 1"	N/A	N/A	N/A	12'- 9"
27"	1'- 8"	3'- 8"	N/A	N/A	5'- 5"	6'-11"	N/A	N/A	7'- 7"	9'- 7"	N/A	N/A	11'-11"	14'-11"
30"	1'-10"	3'-11"	N/A	N/A	6'- 4"	8'- 0"	N/A	N/A	8'- 9"	11'- 0"	N/A	N/A	13'- 8"	17'- 0"
33"	1'-11"	4'- 2"	6'- 2"	6'- 5"	7'- 3"	9'- 1"	8'- 6"	8'-10"	10'- 0"	12'- 5"	13'- 3"	13'- 9"	15'- 5"	19'- 2"
36"	2'- 1"	4'- 5"	6'-11"	7'- 3"	8'- 2"	10'- 2"	9'- 6"	9'-11"	11'- 2"	13'-10"	14'- 9"	15'- 3"	17'- 2"	21'- 3"
42"	2'- 4"	4'-11"	8'- 6"	8'-10"	9'-11"	12'- 4"	11'- 7"	12'- 0"	13'- 6"	16'- 8"	17'- 9"	18'- 5"	20'- 8"	25'- 7"
48"	2'- 7"	5'- 5"	10'- 1"	10'- 5"	11'- 9"	N/A	13'- 7"	14'- 2"	15'-10"	N/A	20'- 9"	21'- 6"	24'- 2"	N/A
54"	3'- 0"	5'-11"	11'- 8"	12'- 1"	N/A	N/A	15'- 8"	16'- 3"	N/A	N/A	23'-10"	24'- 8"	N/A	N/A
60"	3'- 3"	6'- 5"	13'- 3"	N/A	N/A	N/A	17'- 9"	N/A	N/A	N/A	26'-10"	N/A	N/A	N/A

TYPICAL PIPE CULVERT MITERS (3)

Side Slope	0° Skew	15° Skew	30° Skew	45° Skew
3:1	3:1	3.106:1	3.464:1	4.243:1
4:1	4:1	4.141:1	4.619:1	5.657:1
6:1	6:1	6.212:1	6.928:1	8.485:1

CONDITIONS WHERE PIPE RUNNERS ARE NOT REQUIRED (2)

Nominal Culvert I.D.	Single Pipe Culvert	Multiple Pipe Culverts
12" thru 21"	Skews thru 45°	Skews thru 45°
24"	Skews thru 45°	Skews thru 30°
27"	Skews thru 30°	Skews thru 15°
30"	Skews thru 15°	Skews thru 15°
33"	Skews thru 15°	Always required
36"	Normal (No Skew)	Always required
42" to 60"	Always required	Always required

STANDARD PIPE SIZES & MAX PIPE RUNNER LENGTHS (1)

Pipe Size	Pipe O.D.	Pipe I.D.	Max Pipe Runner Length
2" STD	2.375"	2.067"	N/A
3" STD	3.500"	3.068"	10'- 0"
4" STD	4.500"	4.026"	19'- 8"
5" STD	5.563"	5.047"	34'- 2"

ESTIMATED CONCRETE RIPRAP QUANTITIES (CY) (5)

Nominal Culvert I.D.	3:1 Side Slope				4:1 Side Slope				6:1 Side Slope			
	0° Skew	15° Skew	30° Skew	45° Skew	0° Skew	15° Skew	30° Skew	45° Skew	0° Skew	15° Skew	30° Skew	45° Skew
12"	0.4	0.4	0.5	0.5	0.5	0.5	0.5	0.6	0.7	0.7	0.7	0.8
15"	0.5	0.5	0.5	0.6	0.6	0.6	0.6	0.7	0.7	0.7	0.8	0.9
18"	0.5	0.5	0.6	0.6	0.6	0.7	0.7	0.8	0.8	0.8	0.9	1.0
21"	0.6	0.6	0.6	0.7	0.7	0.7	0.8	0.9	0.9	0.9	1.0	1.2
24"	0.6	0.7	0.7	0.8	0.8	0.8	0.8	1.0	1.0	1.0	1.1	1.3
27"	0.7	0.7	0.8	0.9	0.8	0.9	0.9	1.1	1.1	1.1	1.2	1.4
30"	0.8	0.8	0.8	0.9	0.9	0.9	1.0	1.2	1.2	1.2	1.3	1.6
33"	0.8	0.8	0.9	1.0	1.0	1.0	1.1	1.3	1.3	1.4	1.5	1.7
36"	0.9	0.9	0.9	1.1	1.1	1.1	1.2	1.4	1.4	1.5	1.6	1.8
42"	1.0	1.0	1.1	1.3	1.2	1.3	1.3	1.6	1.6	1.7	1.8	2.1
48"	1.1	1.1	1.2	N/A	1.4	1.4	1.5	N/A	1.9	1.9	2.1	N/A
54"	1.3	1.3	N/A	N/A	1.6	1.6	N/A	N/A	2.1	2.1	N/A	N/A
60"	1.4	N/A	N/A	N/A	1.7	N/A	N/A	N/A	2.3	N/A	N/A	N/A

(1) Size of Pipe Runner shall be as shown in the tables. Cross Pipe shall be the same size as the Pipe Runner. Cross Pipe Stub Out and Bottom Anchor Pipe shall be the next smaller size pipe as shown in the STANDARD PIPE SIZES table.

(2) This standard allows for the placement of only one pipe runner across each culvert pipe opening. In order to limit the clear opening to be traversed by an errant vehicle, the following conditions must be met:

For 60" culvert pipes, the skew must not exceed 0°.
For 54" culvert pipes, the skew must not exceed 15°.
For 48" culvert pipes, the skew must not exceed 30°.
For all culvert pipe sizes 42" and less, the skew must not exceed 45°.

If the above conditions cannot be met, the designer should consider using a safety end treatment with flared wings.

(3) Miter = Slope of Mitered Pipe Culvert End

(4) Riprap placed beyond the limits shown will be paid as Concrete

(5) Quantities shown are for one end of one reinforced Concrete Pipe Culvert. For multiple Pipe Culverts or for Corrugated Metal Pipe Culverts, quantities will need to be adjusted. Riprap quantities are for Contractor's information only.

INTERNATIONAL BOUNDARY AND WATER COMMISSION
COMISION INTERNACIONAL DE LIMITES Y AGUAS

S&R INFRASTRUCTURE, LTD.
Engineering Management Technology
S&B Infrastructure, Ltd. Firm Registration Number: 1582

DL, INC.
DOS LOGISTICS, INC.
212 W. 3rd Sreet Phone: (956) 968-8800
Weslaco, Tx. 78596 Fax: (956) 447-8194
Dos Logistics, Inc. Firm Registration Number: F-9225

STATE OF TEXAS
JOSE G. REYES JR.
93827
LICENSED PROFESSIONAL ENGINEER
The seal appearing on this document was authorized by JOSE G. REYES JR. P.E. 93827, on

SAFETY END TREATMENT

FOR 12" DIA TO 60" DIA PIPE CULVERTS TYPE II ~ CROSS DRAINAGE

STATE	COUNTY	DRAWN BY:	CHECKED BY:	
TEXAS	HIDALGO	PROJECT NO. IBM09T0018		SHEET NO.
REHABILITATION OF NORTH FLOODWAY NORTH AND SOUTH LEVEES (FM 1015 TO BASELINE RD)				12.54

N:\Project\U2450\U2450510 - Lower RGFCP\SCANNED DRAWINGS\DGN STRUCTURES\0450515\0450NFN1SDRM002.dgn
6/10/2009
8:31:40 PM

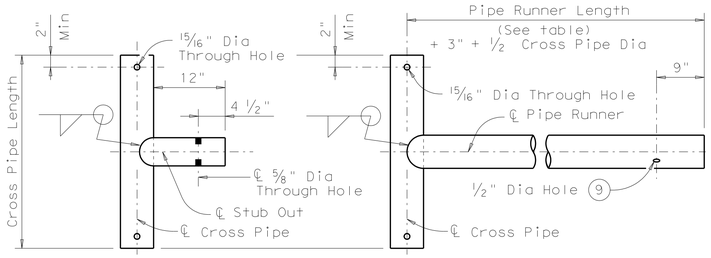

OPTION A1 OPTION A2

CROSS PIPE AND CONNECTIONS DETAILS

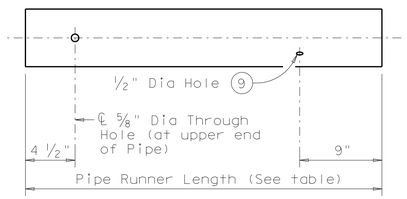

NOTE: The separate Pipe Runner shown is required when Cross Pipe Connection Option A1 is used.

PIPE RUNNER DETAILS

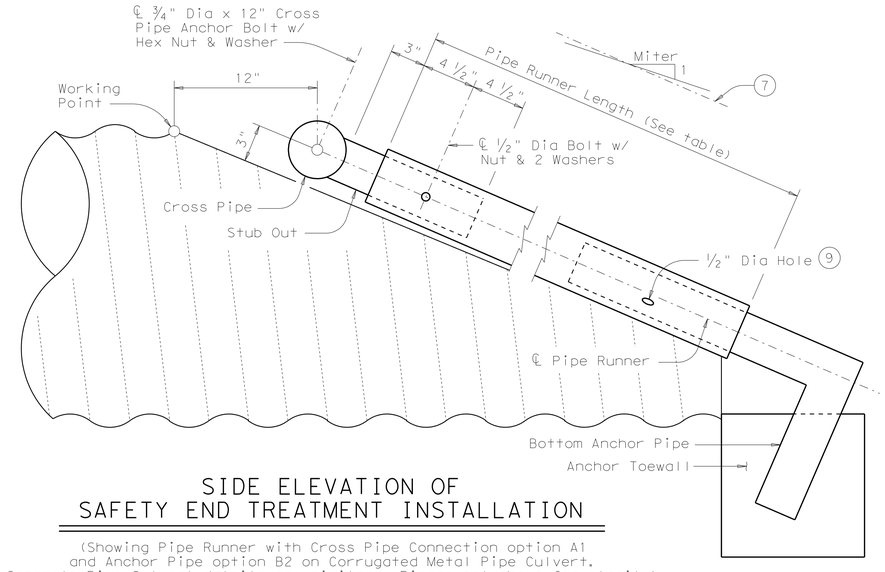

SIDE ELEVATION OF SAFETY END TREATMENT INSTALLATION

(Showing Pipe Runner with Cross Pipe Connection option A1 and Anchor Pipe option B2 on Corrugated Metal Pipe Culvert. Concrete Pipe Culvert details are similar. Riprap not shown for clarity)

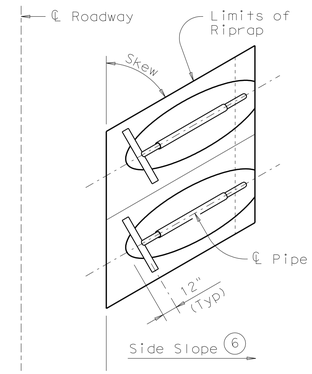

PLAN OF SKEWED INSTALLATION

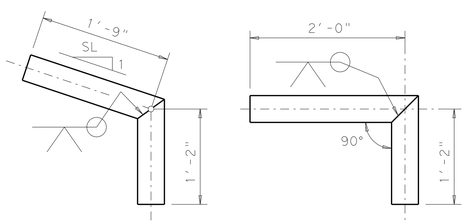

OPTION B1 OPTION B2

BOTTOM ANCHOR PIPE DETAILS (10)

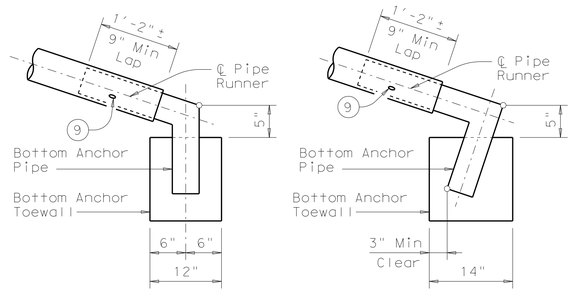

OPTION B1 OPTION B2

BOTTOM ANCHOR TOEWALL DETAILS

(Culvert & Riprap not shown for clarity)

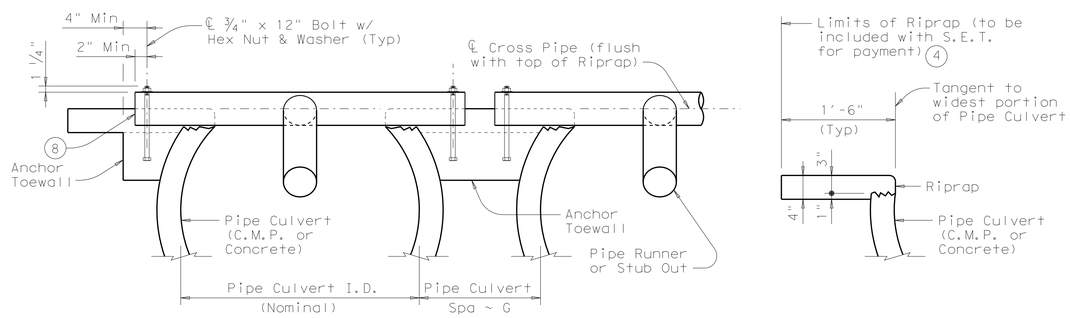

SHOWING CROSS PIPE & ANCHOR TOEWALL

SHOWING TYPICAL PIPE CULVERT & RIPRAP

SECTION A-A

(6) Recommended values of side slope are 3:1, 4:1, & 6:1. All quantities, calculations, and dimensions shown herein are based on these recommended values. Slope of 3:1 or flatter is required for vehicle safety.

(7) Note that actual slope of Pipe Runner may vary slightly from Side Slope of Riprap and trimmed Culvert Pipe edge.

(8) Care shall be taken to ensure that Riprap concrete does not flow into the Cross Pipe so as to permit disassembly of the bolted connection to allow cleanout access.

(9) After installation, the 1/2" hole shall be inspected to ensure that the lap of the Pipe Runner with the Bottom Anchor Pipe is adequate.

(10) At fabricator's option, a heat bend to a smooth 5" radius or a manufactured elbow (of the same material as the Runner) may be substituted for the mitered and welded joint in the Bottom Anchor Pipe.

GENERAL NOTES:

Pipe Runners are designed for a traversing load of 1,800 pounds at yield as recommended by Research Report 280-1, "Safety Treatment of Roadside Cross-Drainage Structures", Texas Transportation Institute, March 1981.

The Safety End Treatments shown herein are intended for use in those installations where out of control vehicles are likely to traverse the openings approximately perpendicular to the Pipe Runners.

Riprap and all necessary inverts shall be Concrete Riprap conforming to the requirements of , "Riprap".

Payment for riprap and toewall is included in the Price Bid for each Safety End Treatment.

Pipe Runners, Cross Pipes, and Anchor Pipes shall conform to the requirements of ASTM A53 (Type E or S, Grade B), ASTM A500 (Grade B), or API 5LX52.

Bolts and nuts shall conform to ASTM A307.

All steel components, except concrete reinforcing, shall be galvanized after fabrication. Galvanizing damaged during transport or construction shall be repaired in accordance with the specifications.

INTERNATIONAL BOUNDARY AND WATER COMMISSION
COMISION INTERNACIONAL DE LIMITES Y AGUAS

S&B INFRASTRUCTURE, LTD.
Engineering Management Technology
S&B Infrastructure, Ltd. Firm Registration Number: 1582

DL, INC.
DOS LOGISTICS, INC.
212 W. 3rd Sreet Phone: (956) 968-8800
Weslaco, Tx. 78596 Fax: (956) 447-8194
Dos Logistics, Inc. Firm Registration Number: F-9225

STATE OF TEXAS
JOSE G. REYES JR.
93827
LICENSED PROFESSIONAL ENGINEER
The seal appearing on this document was authorized by JOSE G. REYES JR. P.E. 93827, on
Jul. 11, 2009.
P.E.

SAFETY END TREATMENT

FOR 12" DIA TO 60" DIA PIPE CULVERTS TYPE II ~ CROSS DRAINAGE

STATE	COUNTY	DRAWN BY:	CHECKED BY:	
TEXAS	HIDALGO	PROJECT NO. IBM09T0018		SHEET NO.
REHABILITATION OF NORTH FLOODWAY NORTH AND SOUTH LEVEES (FM 1015 TO BASELINE RD)				12.55

N:\Project\U0450\U0450510 - Lower RGFCP\SCANNED DRAWINGS\DGN STRUCTURES\0450515\0450NFNISGRN003.dgn
6/10/2009
8:32:17 PM

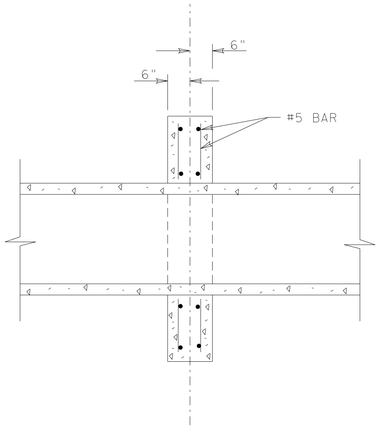

SECTION A–A

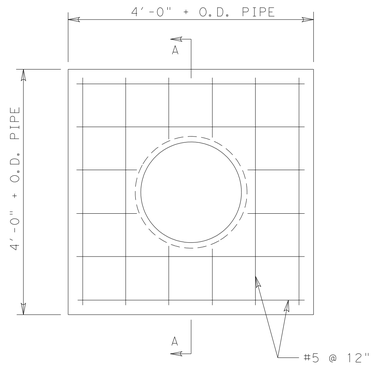

FRONT ELEVATION

CONCRETE PIPE COLLAR

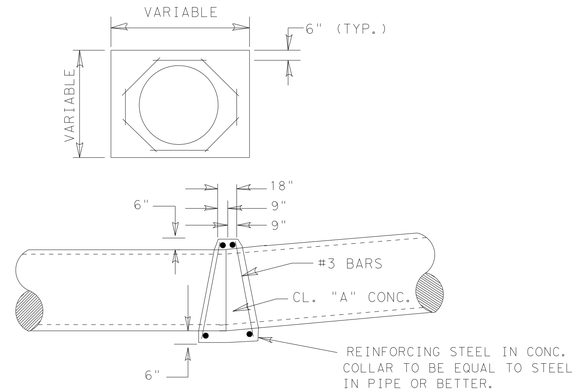

DETAIL FOR CONC. COLLARS
DRAINAGE STRUCTURES AND PIPE
SIPHONS (HORIZ. & VERT. BENDS)

NOTE: PROP. CONC. COLLAR WILL NOT BE PAID FOR DIRECTLY BUT WILL BE SUBSIDIARY TO THE BIDS ITEM 60 64 20 RCP.

INTERNATIONAL BOUNDARY AND WATER COMMISSION
COMISION INTERNACIONAL DE LIMITES Y AGUAS

S&B INFRASTRUCTURE, LTD.
Engineering Management Technology
S&B Infrastructure, Ltd. Firm Registration Number: 1582

DL, INC.
DOS LOGISTICS, INC.
212 W. 3rd Sreet
Weslaco, Tx. 78596
Phone: (956) 968-8800
Fax: (956) 447-8194
Dos Logistics, Inc. Firm Registration Number: F-9225

STATE OF TEXAS
JOSE G. REYES JR.
93827
LICENSED
PROFESSIONAL ENGINEER

The seal appearing on this document was authorized by JOSE G. REYES JR. P.E. 93827, on Jul. 11, 2009.

P.E.

CONCRETE COLLAR DETAILS

STATE	COUNTY	DRAWN BY:	CHECKED BY:	
TEXAS	HIDALGO	PROJECT NO.	IBM09T0018	SHEET NO.
REHABILITATION OF NORTH FLOODWAY NORTH AND SOUTH LEVEES (FM 1015 TO BASELINE RD)				12.56

8:33:19 PM
6/10/2009
N:\Project\u0450\U0450510 - Lower RGFCP\SCANNED DRAWINGS\DGN STRUCTURES\0450515\0450NFN1SDRM004.dgn

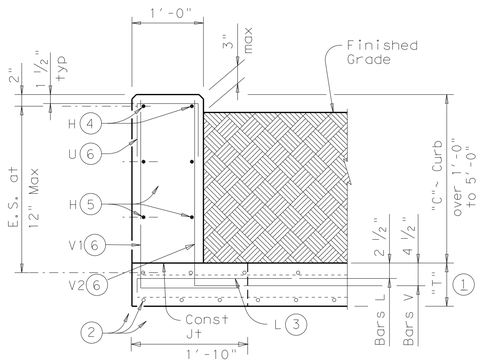

TYPICAL SECTION

Used for Curbs over 1'-0" to 5'-0"

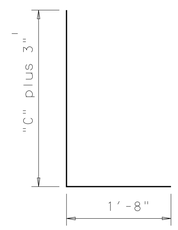

BARS V1 (#5) 6

Spaced at 12" max

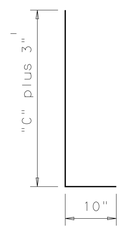

BARS V2 (#5) 6

Spaced at 12" max

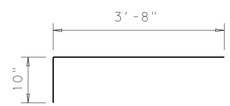

BARS L (#5) 3

Spaced at 12" max

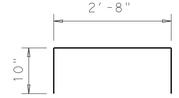

OPTIONAL BARS L (#5) 3 7

Spaced at 12" max

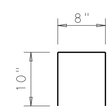

BARS U (#4) 6

Spaced at 12" max

1. "T" is equal to the culvert top slab thickness.
2. Normal culvert slab bars adjusted, and/or removed and replaced with #5 bars minimum as necessary to maintain a maximum 8" spacing.
3. Place bars L as shown. Tilt hook as necessary to maintain cover.
4. Place normal culvert curb bars H (#4) as shown. Adjust as necessary to clear obstructions.
5. Additional bars H (#4) as required to maintain 12" max spa.
6. Place normal culvert curb bars with one bar U and two bars V as shown spaced at 12" max. Adjust length of bars V as necessary to maintain clear cover.
7. Optional bars L are to be used.
8. Quantities shown are for contractor's information only. Quantities are per linear foot of curb length. The values for each section type in table can be interpolated for intermediate values of curb height, "C". Quantity does not include concrete and rebar for box.
9. Existing box top slab and curb shall be broken back sufficiently to obtain a minimum of 1' 10" of existing longitudinal reinforcing bars in the top slab of the box culvert(s). Lap splice curb bars V1 1' 8"and bars V2 10" with exposed box(es) top slab longitudinal bars.
10. The removal of the existing structure to the break line will not be paid for directly but shall be considered subsidiary work to the bid item.

GENERAL NOTES:

Designed according to current AASHTO Standard and Interim Specifications.

All reinforcing shall be Grade 60. Adjust reinforcing as necessary to provide 1 1/4 " cover.

All concrete for curbs shall be Class "C" with a minimum compressive strength of 3600 psi.

This Curb shall be paid for as complete in place.

TABLE OF ESTIMATED CURB QUANTITIES 8

Curb Height "C"	Conc (CY/LF)	Reinf Steel (Lb/LF)
1'-0"	0.037	8.9
1'-6"	0.056	14.3
2'-0"	0.074	15.4
2'-6"	0.093	17.7
3'-0"	0.111	18.8
3'-6"	0.130	21.2
4'-0"	0.148	22.2
4'-6"	0.167	24.6
5'-0"	0.185	25.6

INTERNATIONAL BOUNDARY AND WATER COMMISSION
COMISION INTERNACIONAL DE LIMITES Y AGUAS

S&B INFRASTRUCTURE, LTD.
Engineering Management Technology
S&B Infrastructure, Ltd. Firm Registration Number: 1582

DL, INC.
DOS LOGISTICS, INC.
212 W. 3rd Sreet Weslaco, Tx. 78596
Phone: (956) 968-8800 Fax: (956) 447-8194
Dos Logistics, Inc. Firm Registration Number: F-9225

STATE OF TEXAS
JOSE G. REYES JR.
93827
LICENSED
PROFESSIONAL ENGINEER

The seal appearing on this document was authorized by JOSE G. REYES JR. P.E. 93827, on
11 20 09
P.E.

EXTENDED CURB DETAILS

FOR BOX CULVERTS WITH CURBS OVER 1'-0" TO 5'-0" TALL

STATE	COUNTY	DRAWN BY:	CHECKED BY:	
TEXAS	HIDALGO	PROJECT NO. IBM09T0018		SHEET NO.
REHABILITATION OF NORTH FLOODWAY NORTH AND SOUTH LEVEES (FM 1015 TO BASELINE RD)				12.57

N:\Project\u0450\U0450510 - Lower RGFCP\SCANNED DRAWINGS\DGN STRUCTURES\0450515\0450NFN15DRM001.dgn
6/10/2009 8:34:00 PM

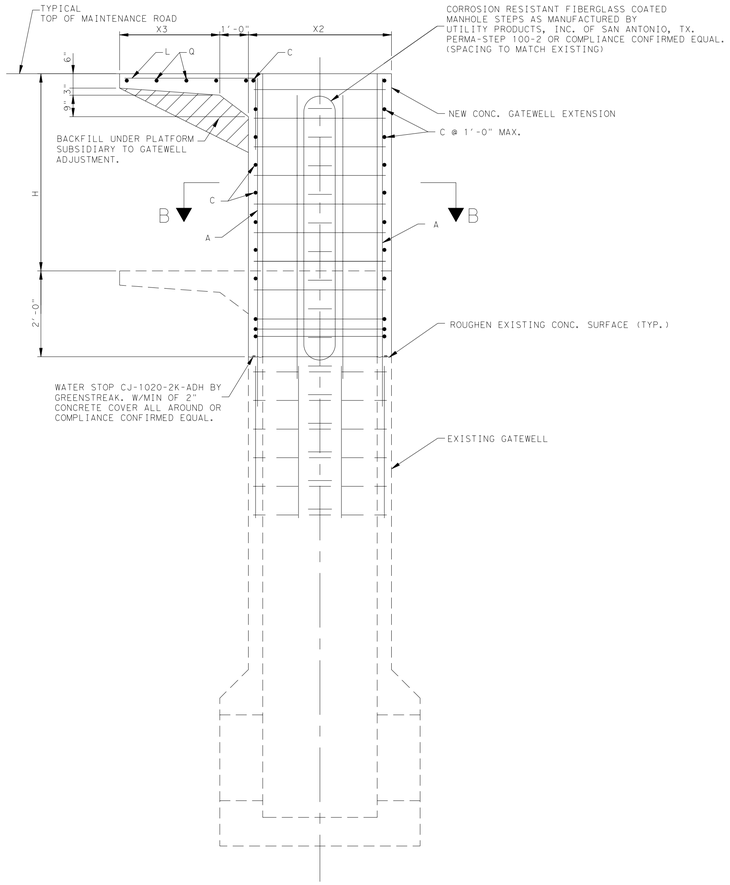

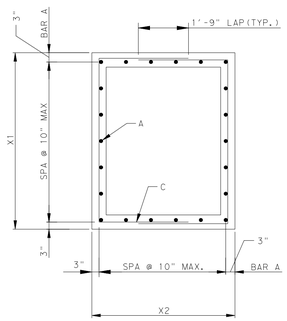

SECTION B-B

SCALE: NTS

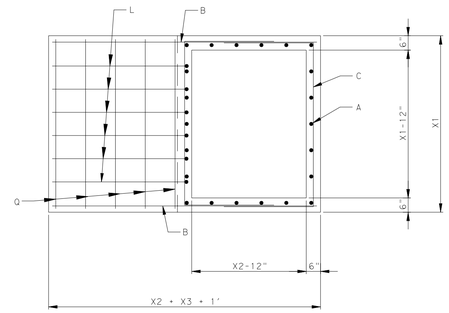

OPERATING PLATFORM

SCALE: NTS

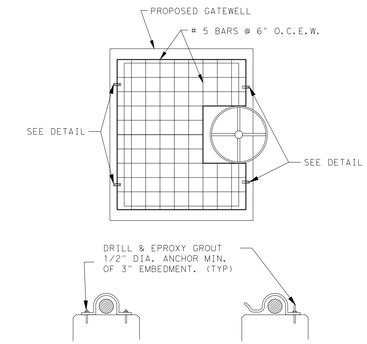

GATEWELL COVER

SCALE: NTS

1. ALL DETAILS ARE TYPICAL, AND SHALL BE INCORPORATED INTO PROJECT AT APPROPRIATE LOCATIONS.

2. IF A SPECIFIC SIMILAR DETAIL IS MISSING, CONTRACTOR SHALL SUBMIT CONSTRUCTION DETAIL BASED ON CONVENTIONAL PRACTICE FOR APPROVAL PRIOR TO CONSTRUCTION

3. PROVIDE TEMPORARY SUPPORT DURING CONSTRUCTION AS REQUIRED, UNTIL STRUCTURAL ELEMENTS ARE PERMANENTLY ATTACHED. DRAWINGS INDICATE STRUCTURE IN FINAL FORM CAPABLE OF SUPPORTING DESIGN LOADS.

4. NOTIFY COR MINIMUM OF 24 HOURS PRIOR TO PLACING CONCRETE.

5. CONCRETE SHALL BE IN ACCORDANCE WITH SPECIFICATIONS AND SHALL HAVE A 28-DAY MINIMUM COMPRESSIVE STRENGTH OF 3000 PSI.

6. SECURE REINFORCING BARS, ANCHOR BOLTS AND EMBEDDED ITEMS PRIOR TO PLACING CONCRETE.

7. ALL REINFORCING BARS SHALL BE IN ACCORDANCE WITH ASTM A615, GRADE 60, Fy=60 ksi.

8. INSTALL 24"x24" CORNER BARS AT ALL GRADE BEAMS AND WALLS, CORNERS AND INTERSECTIONS. SIZE AND NUMBERS SHALL MATCH THE RESPECTIVE HORIZONTAL REINFORCING.

9. REINFORCING BARS SHALL BE PLACED 3 INCHES FROM CENTER LINE OF THE BARS TO THE OUTSIDE FACE OF THE GATEWELL, UNLESS NOTED OTHERWISE.

10. ALL ADDITIVES FOR AIR ENTRAINMENT, WATER REDUCTION, AND SET CONTROL SHALL BE USED IN ACCORDANCE WITH THE SPECIFICATIONS AND THE MANUFACTURER'S DIRECTIONS. THE USE OF CALCIUM CHLORIDE IS PROHIBITED.

11. DETAILING: PER ACI DETAILING MANUAL, LATEST EDITION U.N.O.

12. CONTRACTOR SHALL MEASURE EXISTING SLUICE GATE BOLTING LOCATION AND ADJUST BARS AS NEEDED TO HAVE A MINIMUM CLEARANCE OF 1/2 INCH TO THE REINFORCING BARS.

13. CONTRACTOR SHALL VERIFY THE DIMENSION OF THE OPENINGS ACCORDINGLY AND ADJUST REINFORCING BAR LENGTH BEFORE CONCRETE PLACEMENT.

14. DO NOT SCALE DRAWINGS.

15. CONTRACTOR SHALL REMOVE EXISTING PLATFORM AND 2 FEET OF EXISTING STRUCTURE, CLEAN EXISTING REINFORCEMENT, AND LAP EXISTING VERTICAL REINFORCEMENT WITH PROPOSED REINFORCEMENT (BARS A) A MINIMUM OF 1'-9".

16. GATEWELL COVER SHALL HAVE COATING AS PER SPECIFICATION.

BARS C

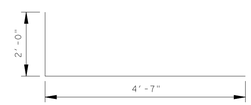

BARS L

TABLE A-STRUCTURES WITH PLATFORMS							
STATION	STRUCTURE NO.	STRUCTURE DIMENSIONS				CONC	REBAR
		H(FT)	X1(FT)	X2(FT)	X3(FT)	(CY)	(LBS)
NFN1 (REACH)							
38+29.71	111	1.93	4	3	6.42	1.20	355
194+38.12	120	2.81	5.5	4	4.89	1.61	518
245+92.55	124	2.54	10	5	4.65	2.90	790
306+73.08	130	2.02	6	4	10.84	2.43	570
380+52.54	136	2.34	4	4	9.58	1.62	444

TABLE A

NOTE:
1. CONTRACTOR TO ADJUST STEM USING THE COUPLING DETAILS PROVIDED. FOR GATEWELLS BEING RAISED CONTRACTOR SHALL PROVIDE SUFFICIENT NEW STEM TO ALLOW SLUICE GATE TO OPERATE TO ITS FULL CAPACITY. THE COUPLING SHALL BE PLACED IN A MANNER SO IT WILL ACCOMMODATE STEM EXTENSION, THIS SHALL BE INCLUDED IN THE GATEWELL ADJUSTMENT BID PRICE.

2. COUPLING SHALL BE STRONGER THAN THE STEMS.

3. GATEWELL CONCRETE AND REBAR ON TABLE A QUANTITIES ARE FOR CONTRACTOR'S INFORMATION. CONTRACTOR TO VERIFY ALL QUANTITIES REQUIRED FOR GATEWELL ADJUSTMENT PRIOR TO SUBMITTING HIS BID.

4. X3 IS A MINIMUM OF 3'-6"

TABLE OF REINFORCING STEEL SIZES					
BARS	A	B	C	L	Q
SIZE	#6	#5	#6	#5	#5

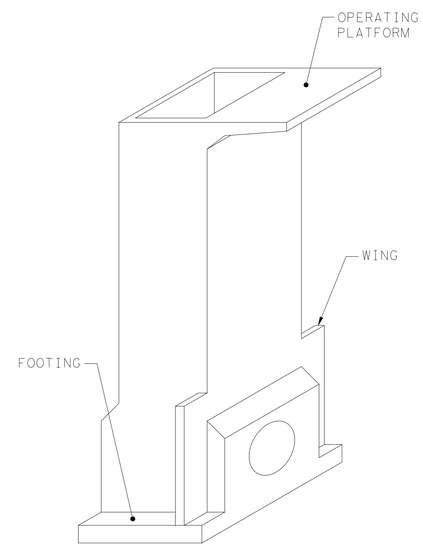

GATEWELL ISOMETRIC VIEW

SCALE: NTS

INTERNATIONAL BOUNDARY AND WATER COMMISSION
COMISION INTERNACIONAL DE LIMITES Y AGUAS

S&B INFRASTRUCTURE, LTD.
Engineering Management Technology
S&B Infrastructure, Ltd. Firm Registration Number: 1582

DL, INC.
DOS LOGISTICS, INC.
212 W. 3rd Sreet
Weslaco, Tx. 78596
Phone: (956) 968-8800
Fax: (956) 447-8194
Dos Logistics, Inc. Firm Registration Number: F-9225

STATE OF TEXAS
JOSE G. REYES JR.
93827
LICENSED
PROFESSIONAL ENGINEER

The seal appearing on this document was authorized by JOSE G. REYES JR. P.E. 93827 on JUL. 29 20 09

REVISED 07/29/2009

GATEWELL ADJUSTMENT DETAILS 1 OF 2

STATE	COUNTY	DRAWN BY:	CHECKED BY:	
TEXAS	HIDALGO	PROJECT NO.	IBM09T0018	SHEET NO.
REHABILITATION OF NORTH FLOODWAY NORTH AND SOUTH LEVEES (FM 1015 TO BASELINE RD)				12.58

N:\Project\u0450\U0450510 - Lower RGFCP\SCANNED DRAWINGS\DGN STRUCTURES\0450515\0450NFN1SDRM004.dgn

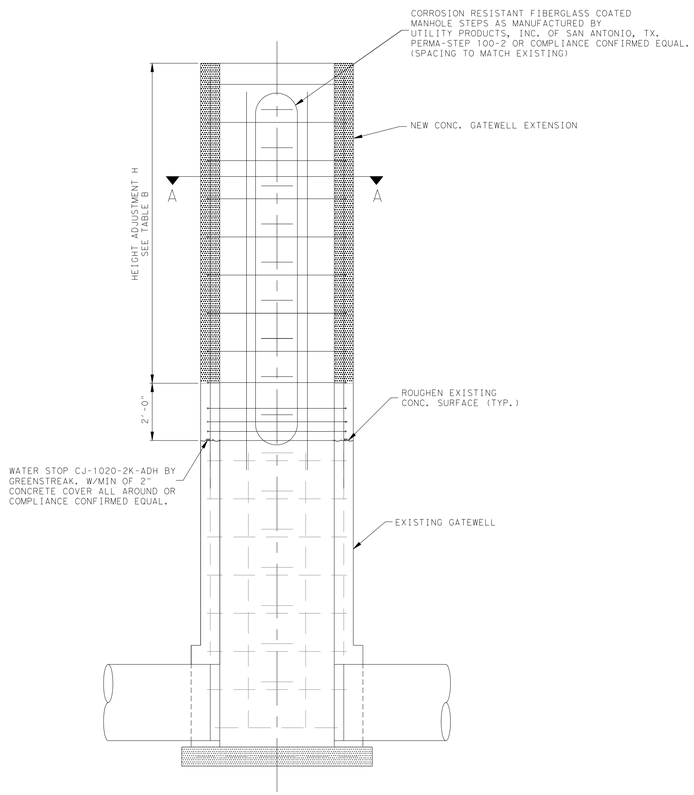

EXIST. GATE WELL TO BE ADJUSTED

SCALE: N.T.S.

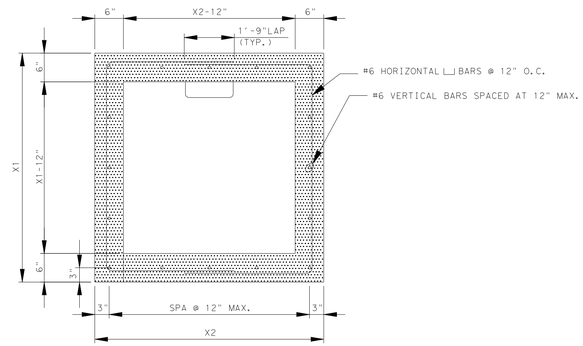

SECTION A-A

SCALE: N.T.S.

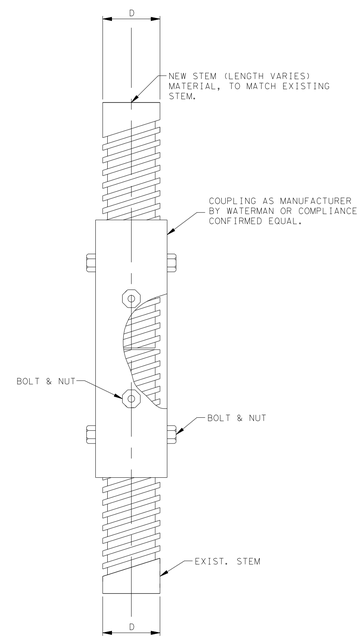

THREADED AND BOLTED

SCALE: N.T.S.

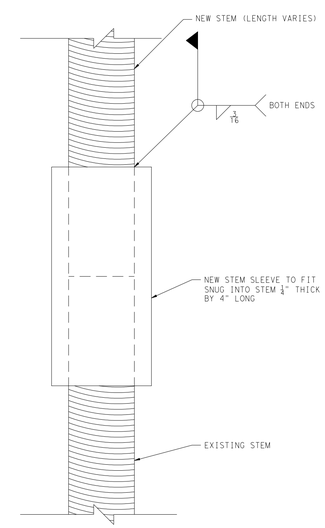

STEM EXTENSION DETAIL

SCALE: N.T.S.

TABLE B-STRUCTURES WITHOUT PLATFORMS						
STATION	STRUCTURE NO.	STRUCTURE DIMENSIONS			CONC	REBAR
		H(FT)	X1(FT)	X2(FT)	(CY)	(LBS)
NFN1 (REACH)						
11+06.37	110A	2.72	4	4	0.61	275
62+68.99	112	1.83	4	4	0.50	232
72+28.08	113	3.09	4	4	0.66	292
81+70.43	114	2.29	4	4	0.56	254
98+77.93	116	1.08	4	4	0.40	197
107+30.83	117	2.26	4	4	0.55	253
113+38.12	118	3.09	4	4	0.66	292
121+42.12	118L	1.17	6	4	0.53	253
143+82.09	119	3.14	4	4	0.67	294
200+01.95	120A	2.78	4	4	0.62	277
227+20.86	121	2.95	4	4	0.64	285
234+82.42	122	2.97	4	4	0.64	286
254+44.94	126	2.07	4	4	0.53	244
255+29.09	127	2.92	4	4	0.64	284
271+58.91	128	2.80	4	4	0.62	278
281+36.21	129	2.62	4	4	0.60	270
350+95.11	132	2.12	4	4	0.53	246
355+48.34	133	2.74	4	4	0.61	276
360+84.71	134	2.61	4	4	0.60	269
364+05.89	135	2.88	4	4	0.63	282
393+68.02	137A	0.61	4	4	0.34	175
NFS1 (REACH)						
233+69.37	146C	2.26	4	4	0.55	253

TABLE B

NOTE:
1. CONTRACTOR TO ADJUST STEM USING THE COUPLING DETAILS PROVIDED. FOR GATEWELLS BEING RAISED CONTRACTOR SHALL PROVIDE SUFFICIENT NEW STEM TO ALLOW SLUICE GATE TO OPERATE TO ITS FULL CAPACITY. THE COUPLING SHALL BE PLACED IN A MANNER SO IT WILL ACCOMMODATE STEM EXTENSION, THIS SHALL BE INCLUDED IN THE GATEWELL ADJUSTMENT BID PRICE.

2. COUPLING SHALL BE STRONGER THAN THE STEMS.

3. GATEWELL CONCRETE AND REBAR ON TABLE A QUANTITIES ARE FOR CONTRACTOR'S INFORMATION. CONTRACTOR TO VERIFY ALL QUANTITIES REQUIRED FOR GATEWELL ADJUSTMENT PRIOR TO SUBMITTING HIS BID.

S&B INFRASTRUCTURE, LTD.
Engineering Management Technology
S&B Infrastructure, Ltd. Firm Registration Number: 1582

DL, INC.
DOS LOGISTICS, INC.
212 W. 3rd Sreet
Weslaco, Tx. 78596
Phone: (956) 968-8800
Fax: (956) 447-8194
Dos Logistics, Inc. Firm Registration Number: F-9225

STATE OF TEXAS
JOSE G. REYES JR.
93827
LICENSED PROFESSIONAL ENGINEER
The seal appearing on this document was authorized by JOSE G. REYES JR. P.E. 93827
JUL 29 2009
P.E.

REVISED 07/29/2009

GATEWELL ADJUSTMENT DETAILS 2 OF 2

STATE	COUNTY	DRAWN BY:	CHECKED BY:	
TEXAS	HIDALGO	PROJECT NO.	IBM09T0018	SHEET NO.
REHABILITATION OF NORTH FLOODWAY NORTH AND SOUTH LEVEES (FM 1015 TO BASELINE RD)				12.59

N:\Project\u0450\U0450510 - Lower RGFCP\SCANNED DRAWINGS\DGN STRUCTURES\0450515\0450NTNISDRW004.dgn

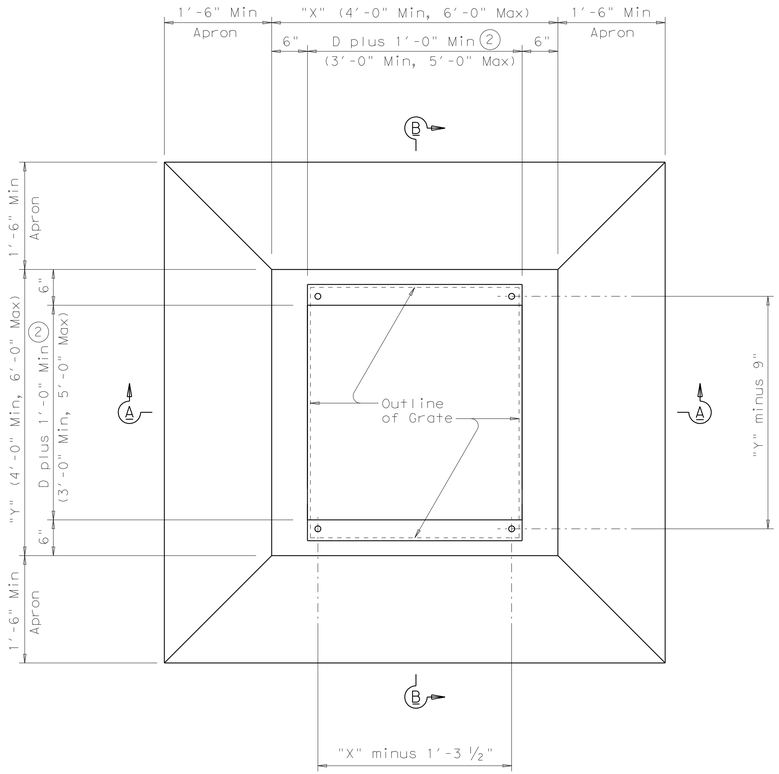

PLAN

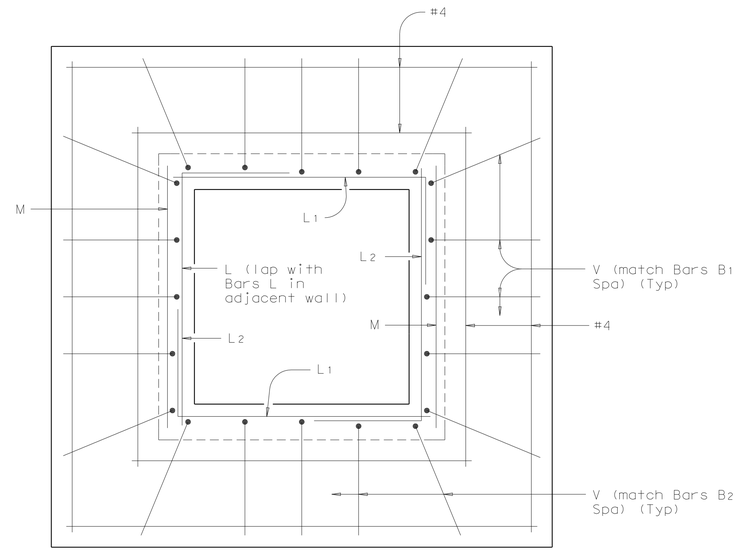

TYPICAL APRON PLAN

(Showing reinforcing in walls and in apron)

(1) May be changed as directed by the Engineer.

(2) D equals the maximum inside diameter of any pipe entering the wall shown or the opposite wall.

(3) D equals the maximum inside diameter of any pipe entering the inlet.

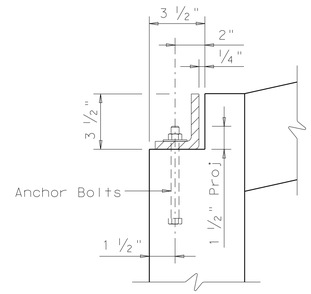

GRATE MOUNTING DETAIL

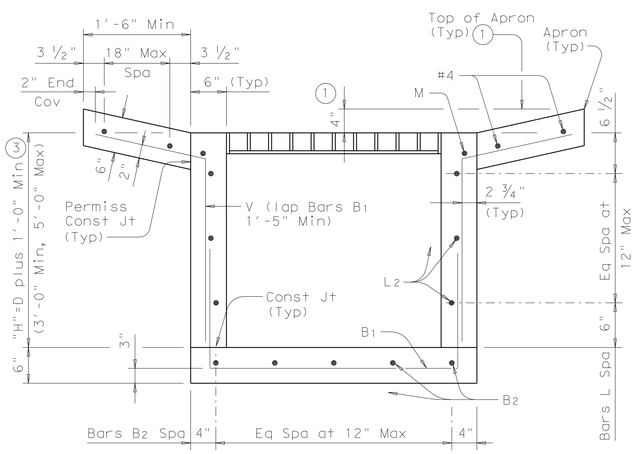

SECTION A-A

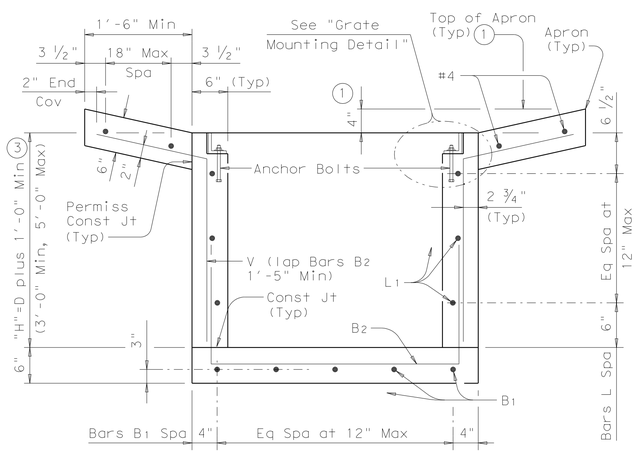

SECTION B-B

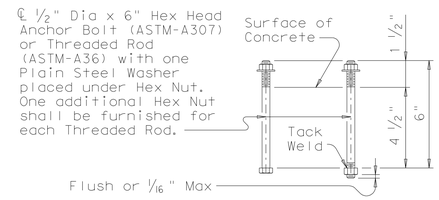

ANCHOR BOLT OPTIONS

S&B INFRASTRUCTURE, LTD.
Engineering Management Technology
S&B Infrastructure, Ltd. Firm Registration Number: 1582

DL, INC.
DOS LOGISTICS, INC.
212 W. 3rd Sreet Phone: (956) 968-8800
Weslaco, Tx. 78596 Fax: (956) 447-8194
Dos Logistics, Inc. Firm Registration Number: F-9225

STATE OF TEXAS
JOSE G. REYES JR.
93827
LICENSED PROFESSIONAL ENGINEER

The seal appearing on this document was authorized by JOSE G. REYES JR. P.E. 93827, on Jul. 11, 2009.

P.E.

HORIZONTAL INLET
TYPE H WITH GRATE
(MAX 48" DIA PIPES)
SHEET 1 OF 2

STATE	COUNTY	DRAWN BY:	CHECKED BY:	
TEXAS	HIDALGO	PROJECT NO.	IBM09T0018	SHEET NO.
REHABILITATION OF NORTH FLOODWAY NORTH AND SOUTH LEVEES (FM 1015 TO BASELINE RD)				12.60

8:35:58 PM
6/10/2009
N:\Project\u0450\U0450510 - Lower RGFCP\SCANNED DRAWINGS\DGN STRUCTURES\0450515\0450515SDRM005.dgn

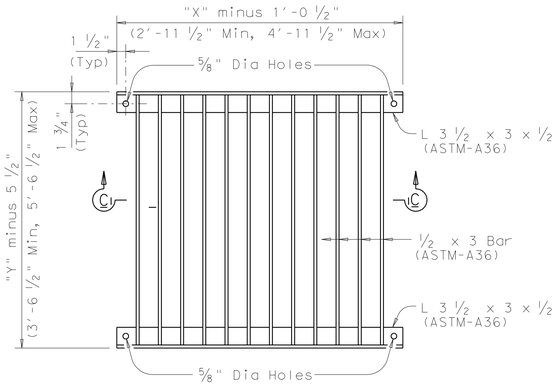

TYPICAL GRATE PLAN

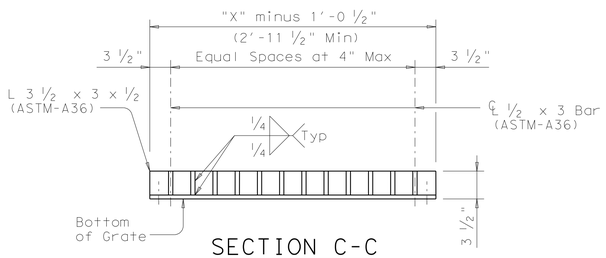

SECTION C-C

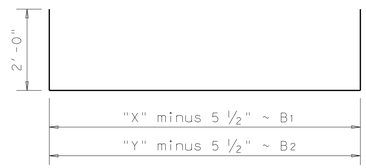

BARS B (#4)

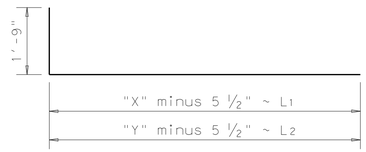

BARS L (#4)

BARS M (#4)

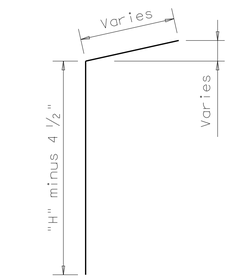

BARS V (#4)

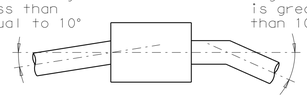

PIPE CONNECTION DETAIL

Connecting pipes should enter within 10° of normal to inlet wall. If necessary, pipe elbow or curved approach alignment should be used to stay within this limit.

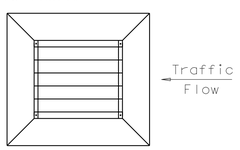

GRATE ORIENTATION DETAIL

If possible, horizontal grate inlet should be oriented such that both traffic and ditch water approach parallel to bars on grate. If this is not possible, orientation must favor traffic flow. Grate is not to be used under direct traffic, rather it is to be used in ditches and medians away from the roadway.

GENERAL NOTES:

When approved, precast inlets with equivalent structural capacity may be furnished. Sealed engineering calculations and drawings shall be submitted for approval prior to construction.

Shop drawings will not be required.

Apron shall be cast-in-place.

In areas of conflict between reinforcing steel, blockouts, pipes, anchor bolts or other reinforcing steel, the reinforcement shall be bent or adjusted to clear as directed by the Engineer.

Anchor Bolts are ½" Dia ASTM A307 Grade A bolts (or A36 threaded rods with one tack welded hex head nut each) with one hex head nut and one plain steel washer.

Structural Steel for grates shall conform to the requirements of ASTM Designation A-36 or AISI Designation M1010-M1020.

All reinforcing steel shall be Grade 60 unless otherwise noted.

All steel components except reinforcing, shall be galvanized after fabrication. Galvanizing damaged during transport or construction shall be repaired in accordance with the specifications.

All concrete shall be Class "A" (f'c = 3,000 psi).

S&B INFRASTRUCTURE, LTD.
Engineering Management Technology
S&B Infrastructure, Ltd. Firm Registration Number: 1582

DL, INC.
DOS LOGISTICS, INC.
212 W. 3rd Sreet Phone: (956) 968-8800
Weslaco, Tx. 78596 Fax: (956) 447-8194
Dos Logistics, Inc. Firm Registration Number: F-9225

STATE OF TEXAS
JOSE G. REYES JR.
93827
LICENSED PROFESSIONAL ENGINEER

The seal appearing on this document was authorized by JOSE G. REYES JR. P.E. 93827, on Jul. 11 20 09.

P.E.

HORIZONTAL INLET
TYPE H WITH GRATE
(MAX 48" DIA PIPES)
SHEET 2 OF 2

STATE	COUNTY	DRAWN BY:	CHECKED BY:	
TEXAS	HIDALGO	PROJECT NO.	IBM09T0018	SHEET NO.
REHABILITATION OF NORTH FLOODWAY NORTH AND SOUTH LEVEES (FM 1015 TO BASELINE RD)				12.61

8:36:34 PM
6/10/2009
N:\Project\0450\0450510 - Lower RGFCP\SCANNED DRAWINGS\DGN STRUCTURES\0450515\0450515SRN005.dgn

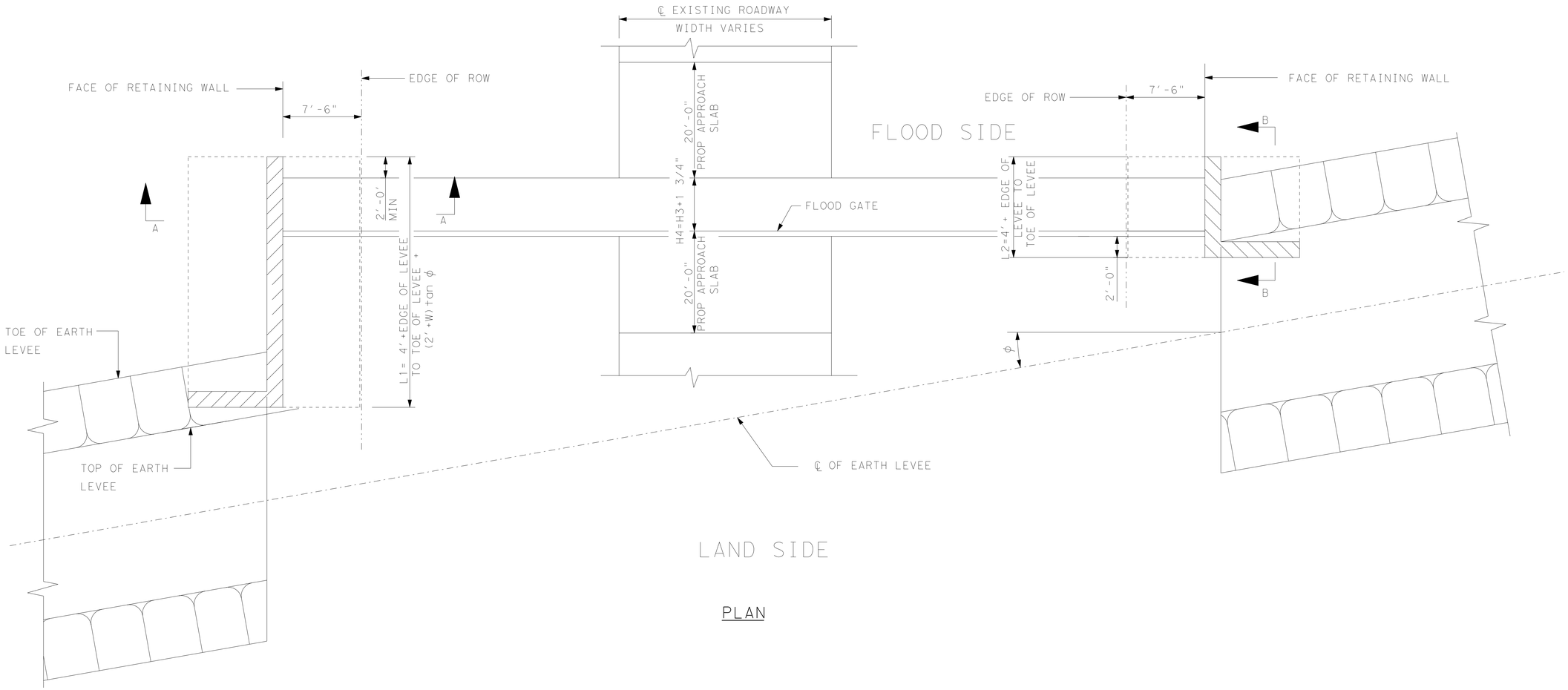

PLAN

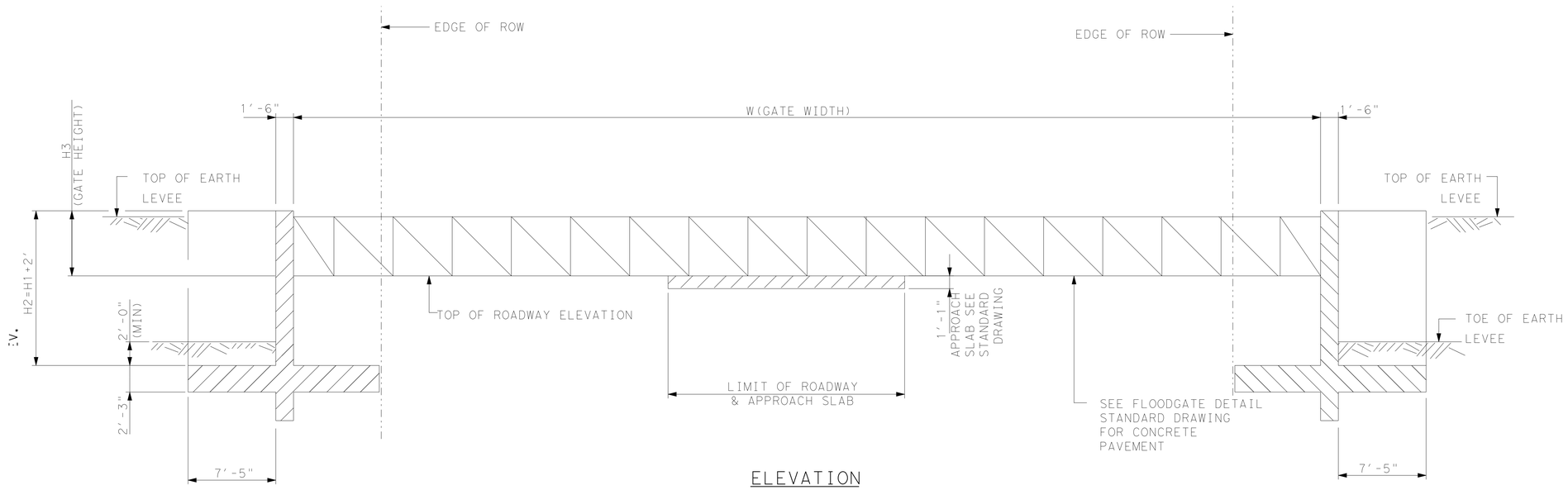

ELEVATION

S&B INFRASTRUCTURE, LTD.
Engineering Management Technology
S&B Infrastructure, Ltd. Firm Registration Number: 1582

STATE OF TEXAS
MANCHING WEI
84851
REGISTERED PROFESSIONAL ENGINEER

The seal appearing on this document was authorized by MANCHING WEI P.E. 84851, on June 11, 2009

NORTH FLOODWAY
NF1
FLOODGATE DETAILS
SHEET 1 OF 2 SHEET

STATE	COUNTY	DRAWN BY: JZ	CHECKED BY: MW	
TEXAS	HIDALGO	PROJECT NO. IBM09T0018		SHEET NO.
REHABILITATION OF NORTH FLOODWAY NORTH AND SOUTH LEVEES (FM 1015 TO BASELINE RD)				12.62

8:14:43 PM
6/10/2009
N:\Project\U0450\U0450515\800\WorkingFiles\Dgn\0450NF1SSFG01.dgn

TABLE OF RETAINING WALL

NAME OF OPENING	STATION OF BEGIN FLOODGATE	STATION OF END FLOODGATE	Levee	Width (W) (ft)	Levee (H1) (ft)	WALL Ht (H2) (ft)	(H3) (ft)	(H4) (ft)	EDGE OF LEVEE TO TOE OF LEVEE	Angle (°)	(L1) (ft)	LEFT OF RETAINING WALL AREA	(L2) (ft)	RIGHT OF RETAINING WALL AREA
OLD HIGHWAY 83	STA 195+57	STA 196+70	NORTH	120	16	18	4	4.15	48	0	52	936	52	936
OLD HIGHWAY 83	STA 89+18	STA 90+24	SOUTH	113	19	21	4	4.15	57	1	61	1281	61	1281
RAILROAD BRIDGE	STA 198+57	STA 199+27	NORTH	77	16	18	5	5.15	48	3	56.14	1010.52	52	936
RAILROAD BRIDGE	STA 92+32	STA 93+01	SOUTH	74	19	21	5	5.15	57	0	61	1281	61	1281

SF

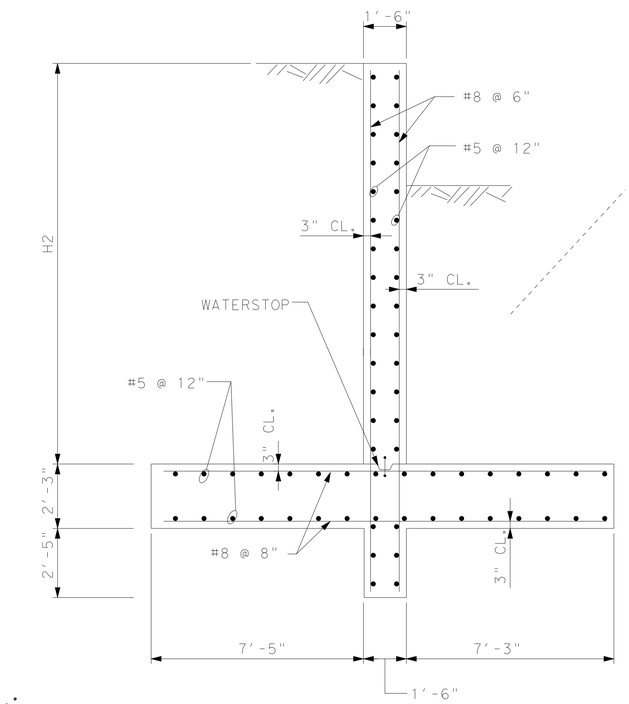

SECTION A-A

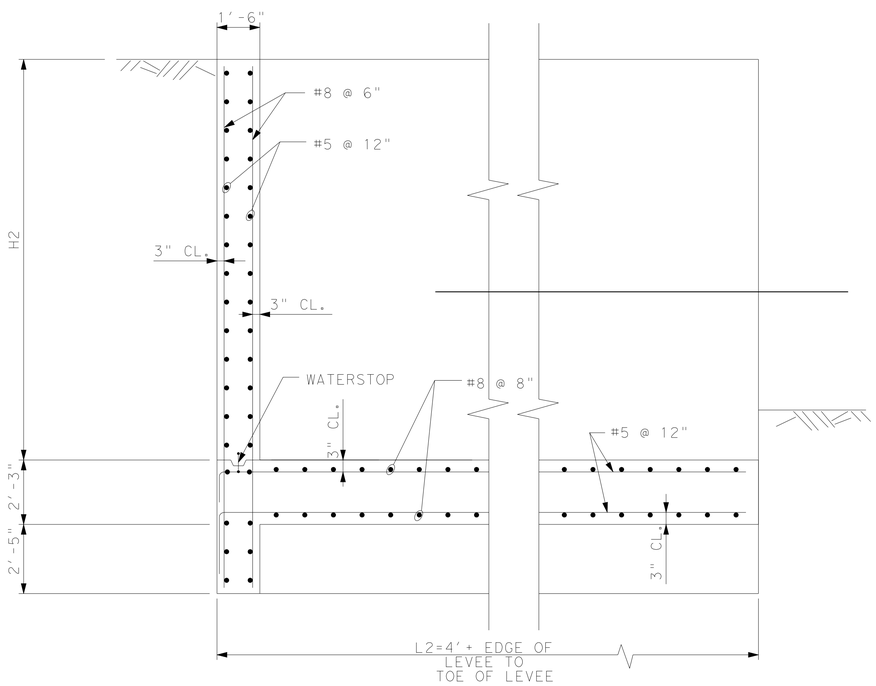

SECTION B-B

NOTES:

1. DESIGN ACCORDING TO ACI 318-08.
2. ALL CONCRETE SHALL BE CLASS "C", FC'=3600 PSI.
3. ALL REINFORCING STEEL SHALL BE ASTM A615, GRADE 60.
4. CONTRACTOR PLEASE FIELD VERIFY ALL THE DIMENSIONS BEFORE CONSTRUCTION.

S&B INFRASTRUCTURE, LTD.
Engineering Management Technology
S&B Infrastructure, Ltd. Firm Registration Number: 1582

STATE OF TEXAS
MANCHING WEI
84851
REGISTERED PROFESSIONAL ENGINEER

The seal appearing on this document was authorized by MANCHING WEI P.E. 84851, on June 11, 2009

NORTH FLOODWAY
NF1
FLOODGATE DETAILS
SHEET 2 OF 2 SHEET

STATE	COUNTY	DRAWN BY: JZ	CHECKED BY: MW	
TEXAS	HIDALGO	PROJECT NO. IBM09T0018		SHEET NO.
REHABILITATION OF NORTH FLOODWAY NORTH AND SOUTH LEVEES (FM 1015 TO BASELINE RD)				12.63

N:\Project\u0450\U0450515\8204\WorkingFiles\Dgn\0450NF1SSFG01.dgn
6/10/2009 8:14:45 PM

TABLE OF RETAINING WALL

REACH	NAME OF OPENING	LEVEE	WIDTH (W) (ft)	Levee (H1) (ft)	EDGE OF LEVEE TO TOE OF LEVEE	WALL Ht (H2) (ft)	Angle ( )	L (ft)	LEFT OF RETAINING WALL AREA	RIGHT OF RETAINING WALL AREA	TOTAL OF RETAINING WALL AREA
NF1	BUS 83	NORTH	24	18	54	18	0	124	2232	2232	4464
NF1	BUS 83	SOUTH	24	18	54	18	0	124	2232	2232	4464

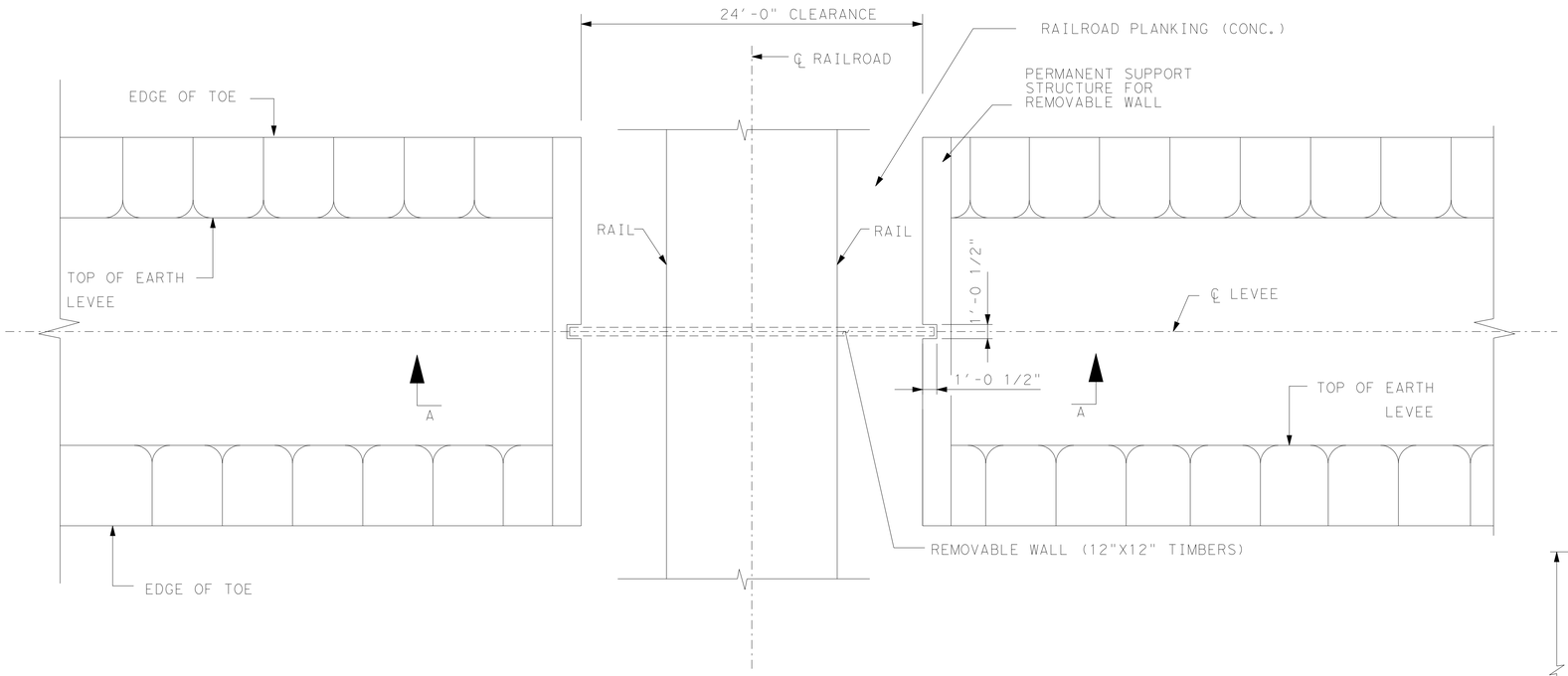

PLAN *

* THE RAILROAD IS LOCATED IN NORTH FLOODWAY 1, JUST NORTH OF BUS 83.

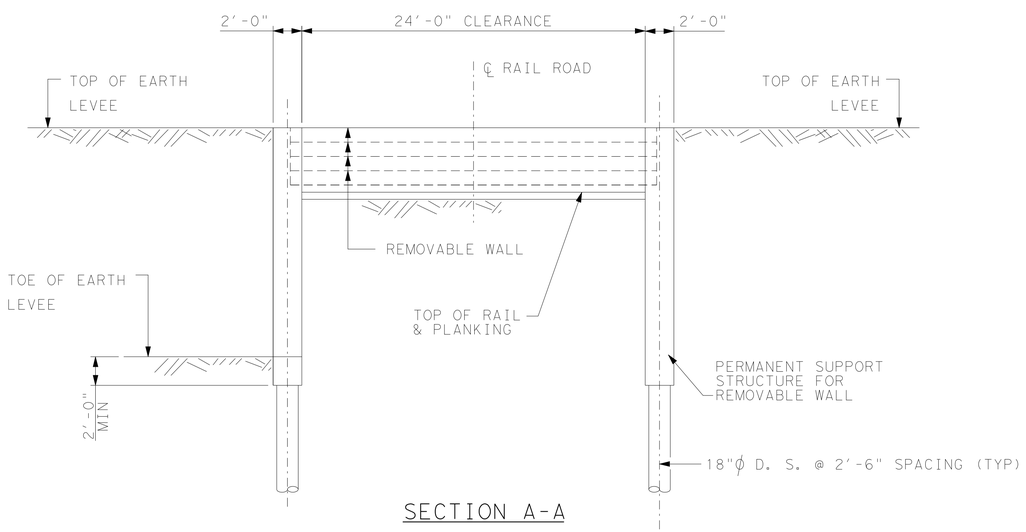

SECTION A-A

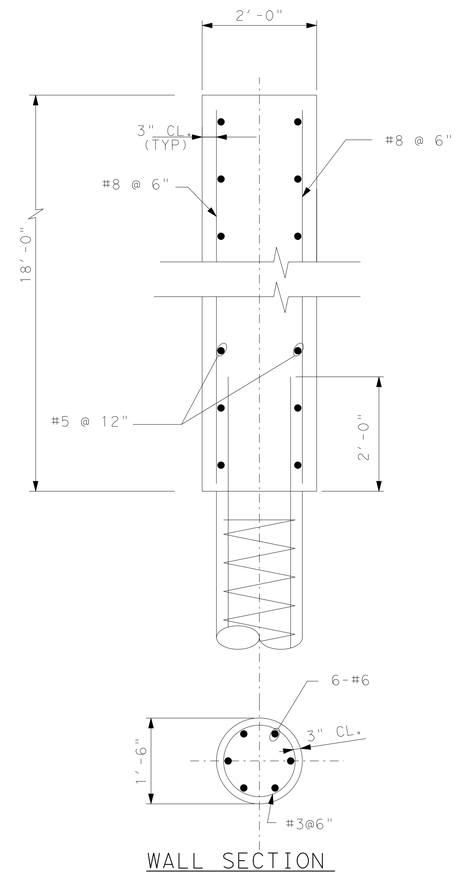

WALL SECTION

NOTES:

1. DESIGN ACCORDING TO ACI 318-08.
2. ALL CONCRETE SHALL BE CLASS "C", FC'=3600 PSI.
3. ALL REINFORCING STEEL SHALL BE ASTM A615, GRADE 60.
4. CONTRACTOR PLEASE FIELD VERIFY ALL THE DIMENSIONS BEFORE CONSTRUCTION.
5. THE RAILROAD IS LOCATED IN NORTH FLOODWAY 1, JUST NORTH OF BUS 83.

S&B INFRASTRUCTURE, LTD.
Engineering Management Technology
S&B Infrastructure, Ltd. Firm Registration Number: 1582

STATE OF TEXAS
MANCHING WEI
84851
REGISTERED PROFESSIONAL ENGINEER

The seal appearing on this document was authorized by MANCHING WEI P.E. 84851, on June 11, 2009.

NORTH FLOODWAY
RAILROAD
FLOODGATE DETAILS
SHEET 1 OF 1 SHEET

STATE	COUNTY	DRAWN BY: JZ	CHECKED BY: MW	
TEXAS	HIDALGO	PROJECT NO.	IBM09T0018	SHEET NO.
REHABILITATION OF NORTH FLOODWAY NORTH AND SOUTH LEVEES (FM 1015 TO BASELINE RD)				12.64

8:16:46 PM
6/10/2009
N:\Project\u0450\U0450515\800*WorkingFiles\Dgn\0450NFISSFG03.dgn

TRAFFIC CONTROL PLAN - SEQUENCE OF CONSTRUCTION

Suggested sequence of construction.
Construct Floodgate and approach slab at Bus 83 (North and South Levee)

Phase I

1. Install traffic control devices as shown on TCP (2-4)-03. Install CTB and 2 REACT's
2. Construct half the floodgate and approach slab.

Phase II

1. Utilizing TCP (2-4)-03, move traffic to the other side of the road. Install CTB and 2 REACT's.
2. Construct remaining half of floodgate and approach slab.

INTERNATIONAL BOUNDARY AND WATER COMMISSION
COMISION INTERNACIONAL DE LIMITES Y AGUAS

S&B INFRASTRUCTURE, LTD.
Engineering Management Technology

S&B Infrastructure, Ltd. Firm Registration Number: 1582

STATE OF TEXAS
PHILLIP J. PAWELEK
82739
REGISTERED PROFESSIONAL ENGINEER

The seal appearing on this document was authorized by PHILLIP J. PAWELEK P.E. 82739, on 6-11, 2009.

Phillip J. Pawelek, P.E.

TRAFFIC CONTROL
FOR
FLOOD GATE INSTALLATION

SHEET 1 OF 1 SHEET

STATE	COUNTY	DRAWN BY: HS/MLG	CHECKED BY: RP	
TEXAS	HIDALGO	PROJECT NO.	IBM09T0018	SHEET NO.
REHABILITATION OF NORTH FLOODWAY NORTH AND SOUTH LEVEES (FM 1015 TO BASELINE RD)				12.65

N:\Project\u0450\U0450515\800*WorkingFiles\Dgn\0450NF1*STRPP02.dgn

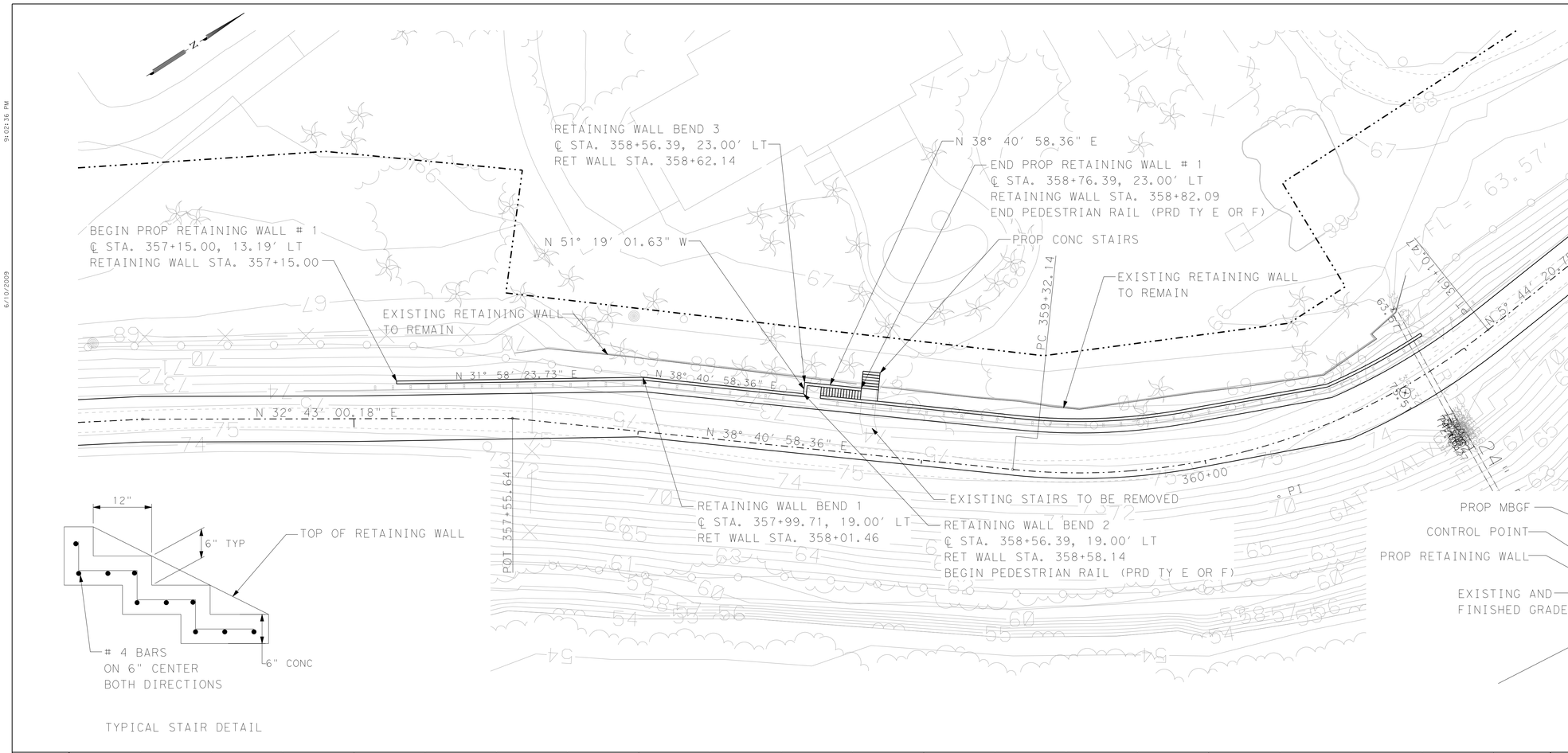

PLAN VIEW LEGEND

- PROP CENTERLINE
- EXIST RIGHT-OF-WAY
- EXIST GEOTECHNICAL BORE
- EXIST FLOODWALL
- EXIST OVERHEAD UTILITY LINE
- EXIST SIGN
- EXIST CONTOURS
- EXIST LEVEE TOE
- EXIST FIBER OPTIC LINE
- EXIST GAS LINE
- EXIST WATER LINE
- EXIST TELEPHONE LINE
- EXIST FENCE
- PROP SEDIMENT CONTROL FENCE
- WATER BOUNDARY
- PROP LEVEE MAINTENANCE ROAD

TYPICAL STAIR DETAIL

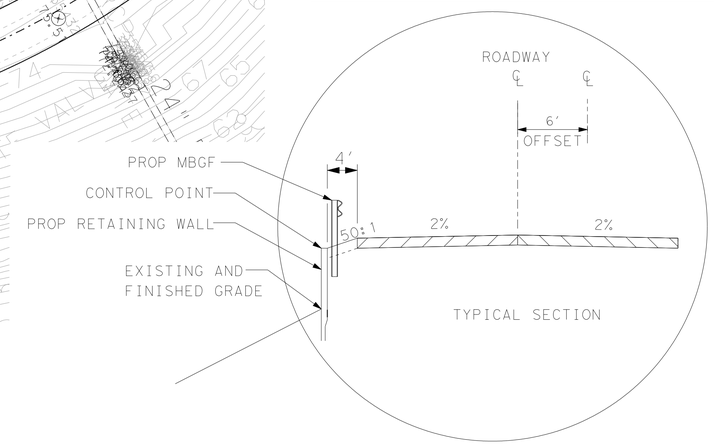

TYPICAL SECTION

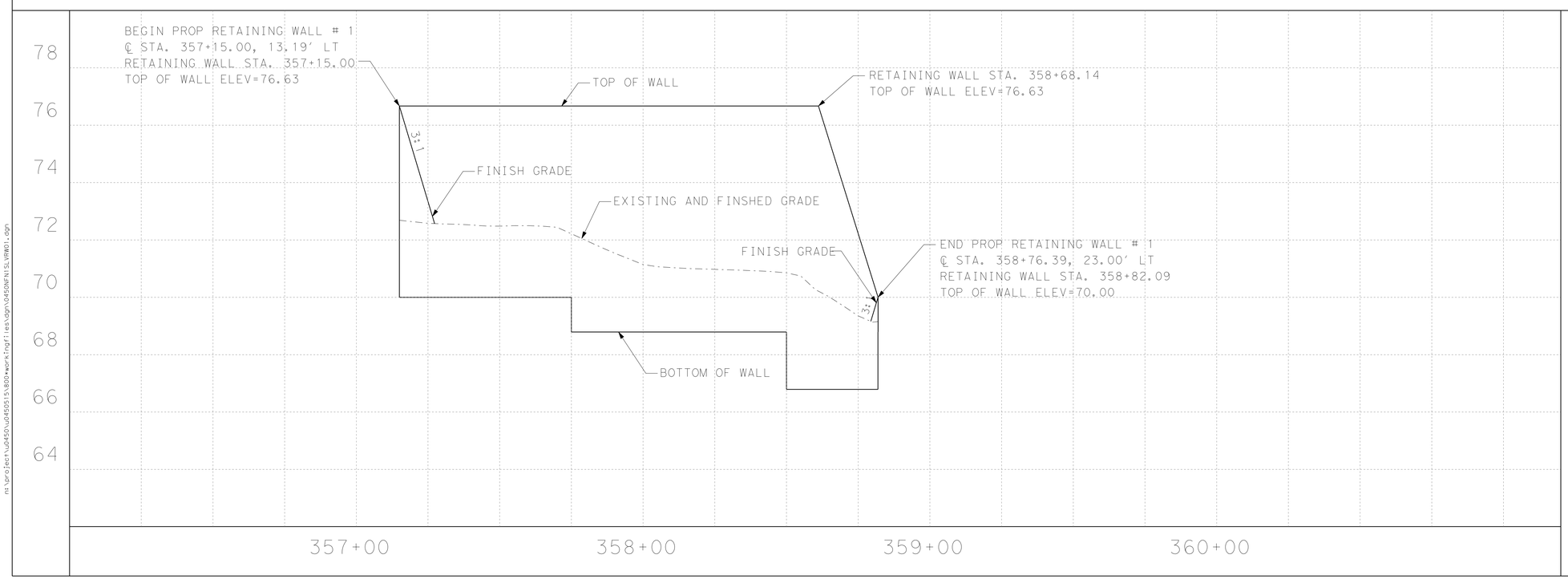

DIV	ITEM	DESC CODE	DESCRIPTION	UNIT	EST	FINAL
60	23	01	RETAINING WALL	SF	1237	
			PEDESTRIAN RAIL	LF	24	

INTERNATIONAL BOUNDARY AND WATER COMMISSION
COMISION INTERNACIONAL DE LIMITES Y AGUAS

S&B INFRASTRUCTURE, LTD.
Engineering Management Technology

S&B Infrastructure, Ltd. Firm Registration Number: 1582

STATE OF TEXAS
PHILLIP J. PAWELEK
82739
REGISTERED PROFESSIONAL ENGINEER

The seal appearing on this document was authorized by PHILLIP J. PAWELEK P.E. 82739, on 6-11, 2009

Phillip J. Pawelek, P.E.

NORTH FLOODWAY NORTH LEVEE RETAINING WALL LAYOUT # 1

STA. 357+15.00 TO STA. 358+82.09

SHEET 1 OF 1 SHEET

STATE	COUNTY	DRAWN BY: JS/JJL	CHECKED BY: PP	
TEXAS	HIDALGO	PROJECT NO. IBM09T0018		SHEET NO.
REHABILITATION OF NORTH FLOODWAY NORTH AND SOUTH LEVEES (FM 1015 TO BASELINE RD)				12.66

6/10/2009 9:02:36 PM
n:\project\u0450\u0450515\800\workingfiles\dgn\0450NFNISLPRW01.dgn

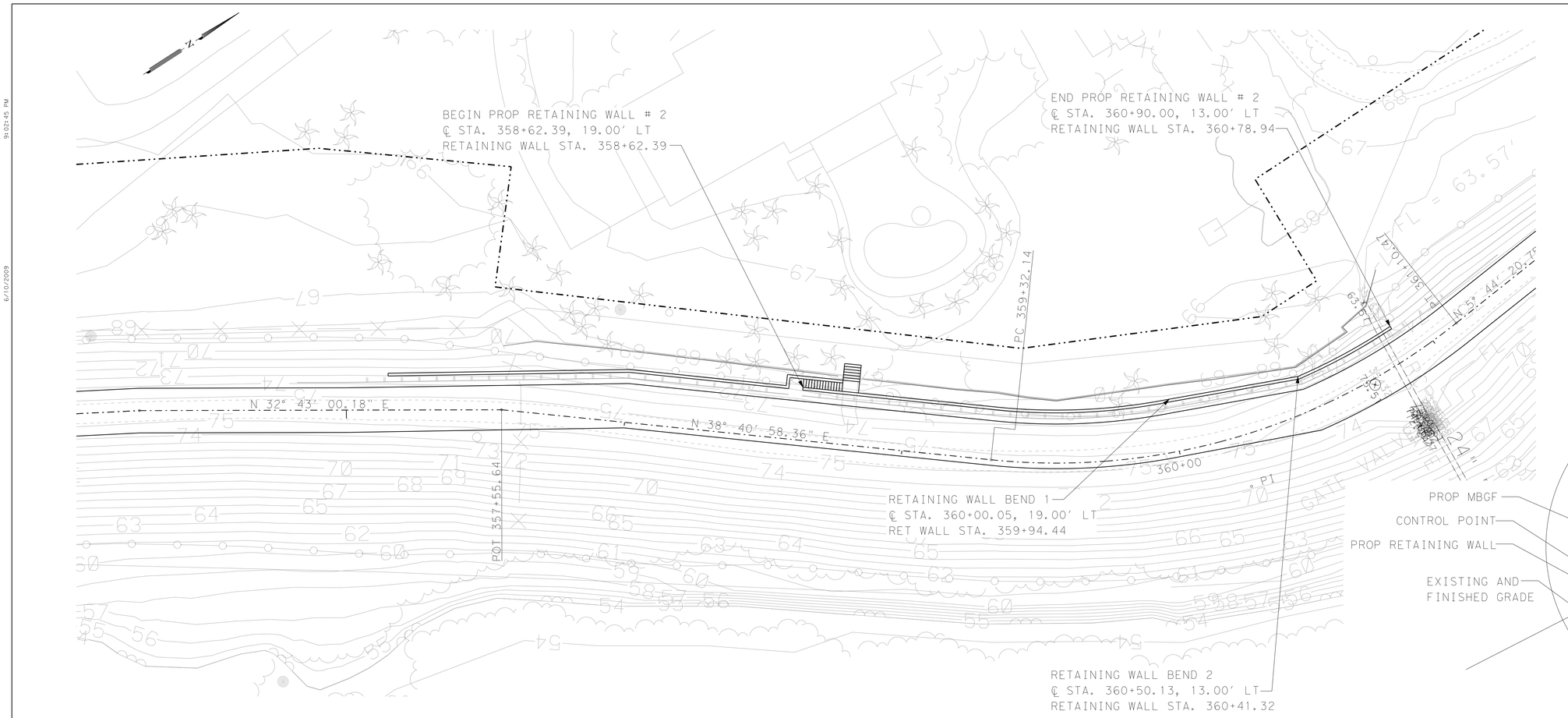

PLAN VIEW LEGEND

- PROP CENTERLINE
- EXIST RIGHT-OF-WAY
- EXIST GEOTECHNICAL BORE
- EXIST FLOODWALL
- EL-OH — EXIST OVERHEAD UTILITY LINE
- EXIST SIGN
- 101 — EXIST CONTOURS
- EXIST LEVEE TOE
- F/O — EXIST FIBER OPTIC LINE
- GAS — EXIST GAS LINE
- W — EXIST WATER LINE
- T — EXIST TELEPHONE LINE
- EXIST FENCE
- PROP SEDIMENT CONTROL FENCE
- WATER BOUNDARY
- PROP LEVEE MAINTENANCE ROAD

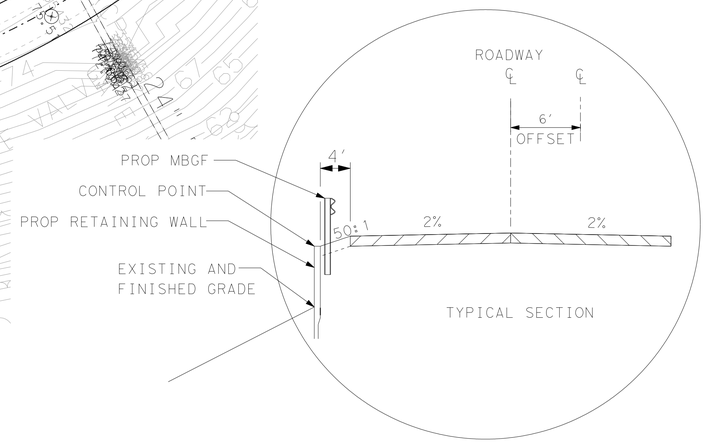

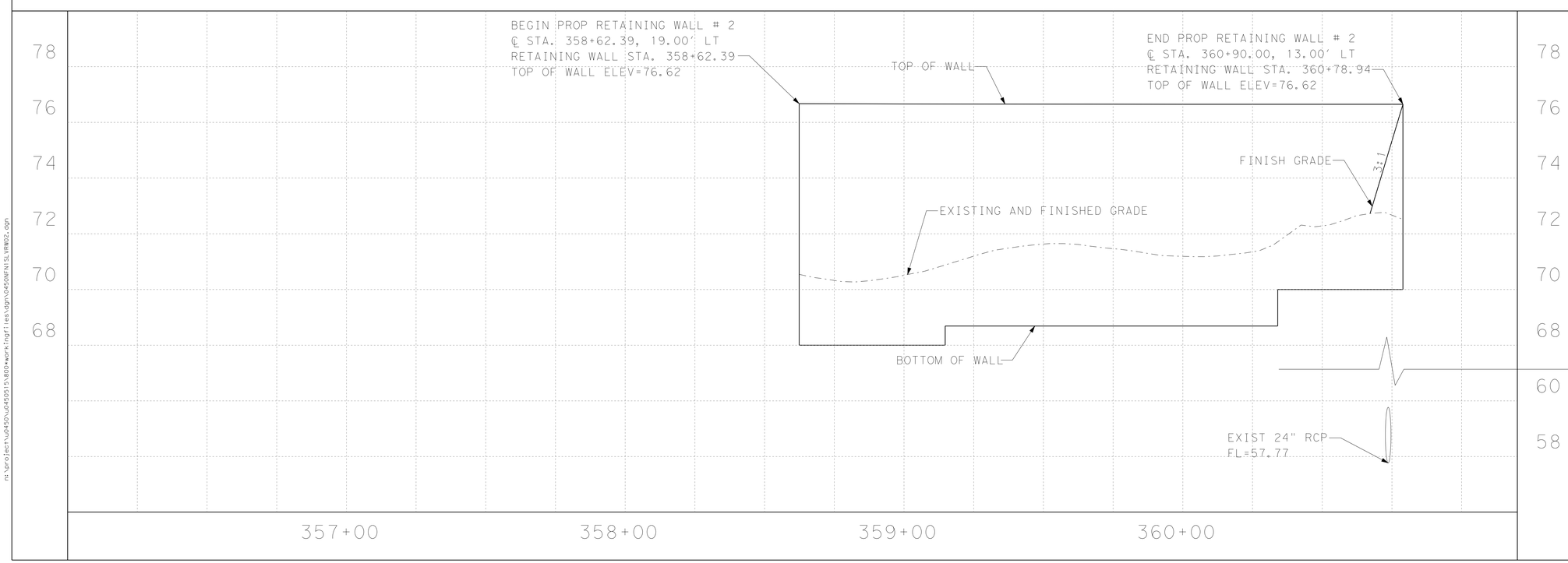

DIV	ITEM	DESC CODE	DESCRIPTION	UNIT	EST	FINAL
60	23	01	RETAINING WALL	SF	1702	
			PEDESTRIAN RAIL	LF		

S&B INFRASTRUCTURE, LTD.
Engineering Management Technology
S&B Infrastructure, Ltd. Firm Registration Number: 1582

STATE OF TEXAS
PHILLIP J. PAWELEK
82739
REGISTERED PROFESSIONAL ENGINEER

The seal appearing on this document was authorized by PHILLIP J. PAWELEK P.E. 82739, on 6-11, 2009.

Phillip J. Pawelek, P.E.

NORTH FLOODWAY
NORTH LEVEE
RETAINING WALL LAYOUT # 2
STA. 358+62.39 TO STA. 360+78.94

SHEET 1 OF 1 SHEET

STATE	COUNTY	DRAWN BY: JS/JJL	CHECKED BY: PP	
TEXAS	HIDALGO	PROJECT NO.	IBM09T0018	SHEET NO.
REHABILITATION OF NORTH FLOODWAY NORTH AND SOUTH LEVEES (FM 1015 TO BASELINE RD)				12.67

9:02:45 PM
6/10/2009
n:\project\u0450\u0450515\800*workingfiles\dgn\0450NFN1SLVRW02.dgn

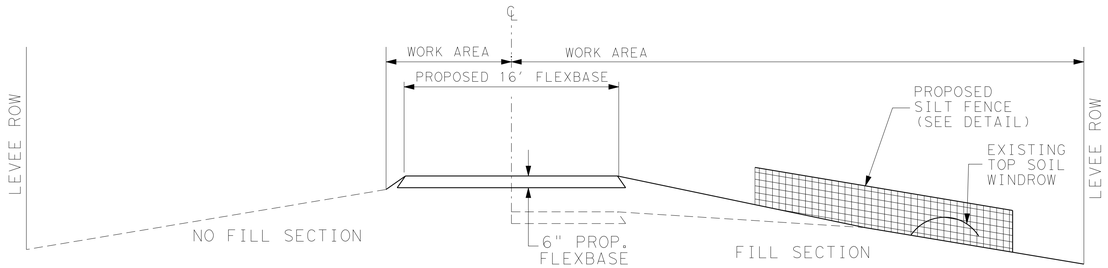

NOTE:
ADDITIONAL SILT FENCE MAY BE REQUIRED IF DEEMED NECESSARY BY THE ENGINEER.

DETAIL OF ROCK
SILT FENCE PLACEMENT

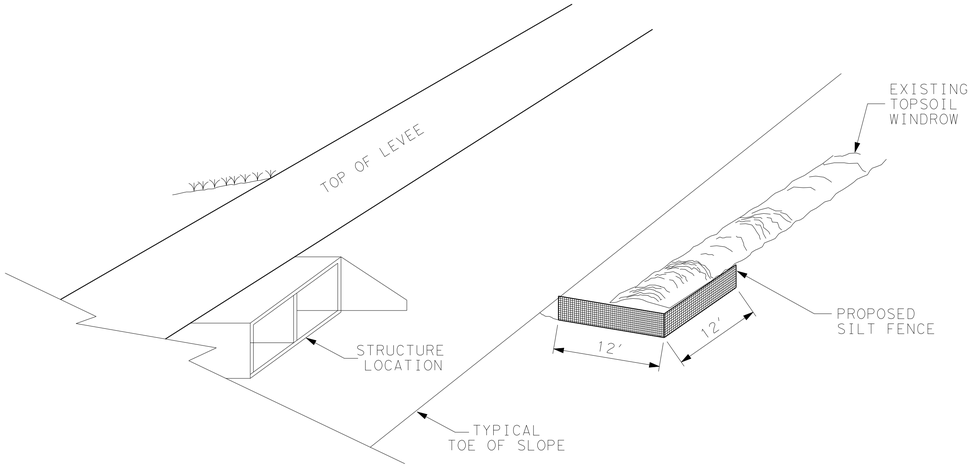

TYPICAL PLAN VIEW IN FILL SECTIONS

NOTE:

1).- CONTRACTOR TO WINDROW EXISTING 6" OF TOP SOIL AT THE BOTTOM OF LEVEE TOE.
2).- UPON COMPLETION OF FILL SECTION CONTRACTOR SHALL REWORK TOP SOIL WINDROW ON TOP OF SLOPE.

S&B INFRASTRUCTURE, LTD.
Engineering Management Technology
S&B Infrastructure, Ltd. Firm Registration Number: 1582

STATE OF TEXAS
PHILLIP J. PAWELEK
82739
REGISTERED PROFESSIONAL ENGINEER

The seal appearing on this document was authorized by PHILLIP J. PAWELEK P.E. 82739, on 6-11, 2009.

Phillip J. Pawelek, P.E.

SW3P

SHEET 1 OF 1 SHEET

STATE	COUNTY	DRAWN BY:	CHECKED BY:	
TEXAS	HIDALGO	PROJECT NO.	IBM09T0018	SHEET NO.
REHABILITATION OF NORTH FLOODWAY NORTH AND SOUTH LEVEES (FM 1015 TO BASELINE RD)				13.01

N:\Project\u0450\U0450515\800\WorkingFiles\Dgn\0450515SDREC1.dgn

During the planning phase of project development the following environmental permits, issues and commitments have been developed during coordination with resource agencies, local governmental entities and the general public. Any change orders and/or deviations from the final design must be reported to the Engineer prior to the commencement of construction activities, as additional environmental clearances may be required.

All environmental statements in the signed Finding of NO Significant Impacts for all associated projects will be adhered to and are environmentally binding.

I. Clean Water Act, Section 402 National Pollutant Discharge Elimination System

(Addresses MS4 requirements for project)

☐ No Action Required ■ Required Action

1. A storm water pollution prevention plan (SW3P) would be developed during project design to minimize impacts to receiving water, as specified by USEPA regulations for construction projects. The storm water pollution prevention plan would include construction areas along the levee system, as well as equipment staging areas.

2. To prevent sedimentation, BMPs such as sediment fences and/or sediment barriers around wetlands would be installed while construction occurs in affected areas.

II. Clean Water Act, Section 401 and 404 Compliance

Filling, dredging or excavating in any water bodies, rivers, creeks, streams, wetlands or wet areas is prohibited unless specified in the USACE permit and approved by the Engineer.

■ No Permit Required ☐ 404 Permit and 401 Certification Required

The Contractor must adhere to all of the terms and conditions associated with the following permit(s):

No impacts to jurisdictional wetlands are anticipated from levee expansion activities associated with the North Floodway Levee System. No wetlands are located within the potential levee expansion area, however there are 5 potential jurisdictional wetlands (B, C, D, E, M), located immediately adjacent to sections of the levee project.

Wetlands	Stations No.
1. Wetland B	74+00 - 80+70
2. Wetland C	66+50 - 73+00
3. Wetland D	58+00 - 65+00
4. Wetland E	44+00 - 56+00
5. Wetland M	358+00 - 365+00

III. Cultural Resources

☐ No Action Required ■ Required Action

1. THC concurrence was based on the following: in some locations, up to 2 feet of fill material would be placed on top of the levee, extending levee footprint up to 12 feet from the current toe of the levee. This expansion would take place along to the approximately 20 feet service corridor currently utilized for levee maintenance, inside the maintained floodway, and entirely within the flood control project right of way. In some instances, adjustment in levee slope would be made to eliminate the need for levee footprint expansion, when required due to engineering considerations or for protection of biological or cultural resources. The need for excavation outside the levee structure is anticipated.

2. The assumed and preferred mitigation is avoidance for cultural resources.

3. While no impacts on High Probability Areas (HPAs) were identified, there is a possibility that an accidental discovery of archaeological resources may be encountered during construction. If buried cultural materials were encountered during construction, the contractor would cease work in the immediate area and notify the State Historic Preservation Officer.

Upon discovery of archaeological artifacts (bones, burnt rock, flint, pottery, etc.) cease work in the immediate area and contact the Engineer immediately.

IV. Hazardous Materials or Contamination Issues

☐ No Action Required ■ Required Action

If potentially hazardous material and/or contaminated media (i.e. soil, groundwater, surface water, sediment, building materials) are unexpectedly encountered during construction, cease work in the immediate area and contact TCEQ & USIBWC EMD immediately.

V. Federal Listed, and Proposed Threatened and Endangered Species, Critical Habitat, State Listed Species, Candidate Species and Migratory Birds

☐ No Action Required ■ Required Action

1. Unforeseen adverse effects may be prevented by timing construction activities to avoid breeding and nesting seasons of T&E species. Consultation with TPWD and USFWS will be required to schedule construction activities to minimize potential impacts on species and species habitat.

2. When warranted for protection of biological resources the need for levee footprint expansion would be eliminated by levee slope adjustment.

3. Construction activities along natural resources management areas would be coordinated with the USFWS and TPWD.

4. Coordination with TPWD prior to construction concerning White-tailed Kites located within Estero Llano Grande State Park (Main Park NFW1 (North Floodway West Levee) between Levee Mile 24-25) near the Main Floodway there is a grassy field on the interior side of the levee. The kites nest in the spring, the timing of construction activities would need to occur outside the nesting season to protect birds and to occur when tourists are not present to view the birds.

If any of the listed species are observed, cease work in the immediate area, do not disturb species or habitat and contact the Engineer immediately. The work may not remove active nests from bridges and other structures during nesting season of the birds associated with the nests. If caves or sinkholes are discovered, cease work in the immediate area, and contact the USFWS & USIBWC EMD immediately.

If an active nest is found, immediately contact the USFWS & USIBWC EMD and cease work around nest at a 25 foot radius.

VI. Vegetation Resources

☐ No Action Required ■ Required Action

1. After construction is complete, the expanded levee, as well as any required construction corridor, would be re-vegetated with native herbaceous vegetation from approved USFWS lists.

VII. Soil

1. Levee fill material would come from local commercial sources and not from borrow areas in the floodplain.

2. Earthwork would be planned and conducted in such a manner as to minimize the duration of exposure of unprotected soil. Protection would be provided by accelerated growth of permanent vegetation, temporary vegetation, mulching, or netting. Slopes too steep for stabilization by other means would be stabilized by hydroseeding, mulch anchored in place, covering by anchored netting, sodding, or such combination of these and other methods as may be necessary for effective erosion control.

3. Use of best management practices such as rock berms, silt fences, and single point construction entries would minimize erosion during construction.

VIII. Other Environmental Issues

☐ No Action Required ■ Required Action

Transportation

1. All construction activities would occur within the existing ROW.

2. Transportation of construction equipment and the use of personnel vehicles would mainly occur within the levee ROW and along the toe of the levee road adjacent to the levee.

3. Any new easements would have to be obtained by USIBWC if levee footprints are increased from existing conditions.

4. Coordination during construction activities would take place with U.S. Customs and Border Patrol concerning Levee Road usage.

Engineering Measures

1. During the project construction, existing access points to the levee road would remain in service; because no significant modifications would be made to the levee 3:1 slope ratio, lateral access to the levee road would continue as currently available.

2. During the project construction, methods such as wetting the soil would be employed to prevent erosion from unvegetated slopes and/or corridors.

3. An environmental monitor should be available during construction.

INTERNATIONAL BOUNDARY AND WATER COMMISSION
COMISION INTERNACIONAL DE LIMITES Y AGUAS

S&B INFRASTRUCTURE, LTD.
Engineering Management Technology

S&B Infrastructure, Ltd. Firm Registration Number: 1582

STATE OF TEXAS
PHILLIP J. PAWELEK
82739
REGISTERED PROFESSIONAL ENGINEER

The seal appearing on this document was authorized by PHILLIP J. PAWELEK P.E. 82739, on 7-29, 2009.

Phillip J. Pawelek, P.E.

REVISED 07/29/2009

ENVIRONMENTAL PERMITS ISSUES & COMMITMENTS (EPIC) NORTH FLOODWAY NO. & SO.

SHEET 1 OF 1 SHEET

STATE	COUNTY	DRAWN BY: JL/JJL	CHECKED BY: PP	
TEXAS	HIDALGO	PROJECT NO. IBM09T0018		SHEET NO.
REHABILITATION OF NORTH FLOODWAY NORTH AND SOUTH LEVEES (FM 1015 TO BASELINE RD)				14.01

N:\Project\u0450\u045015\800\WorkingFiles\Dgn\045015SEPICI01.dgn

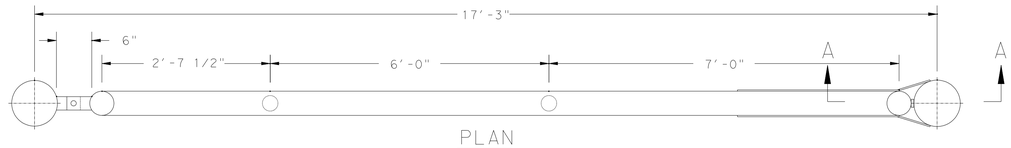

PLAN

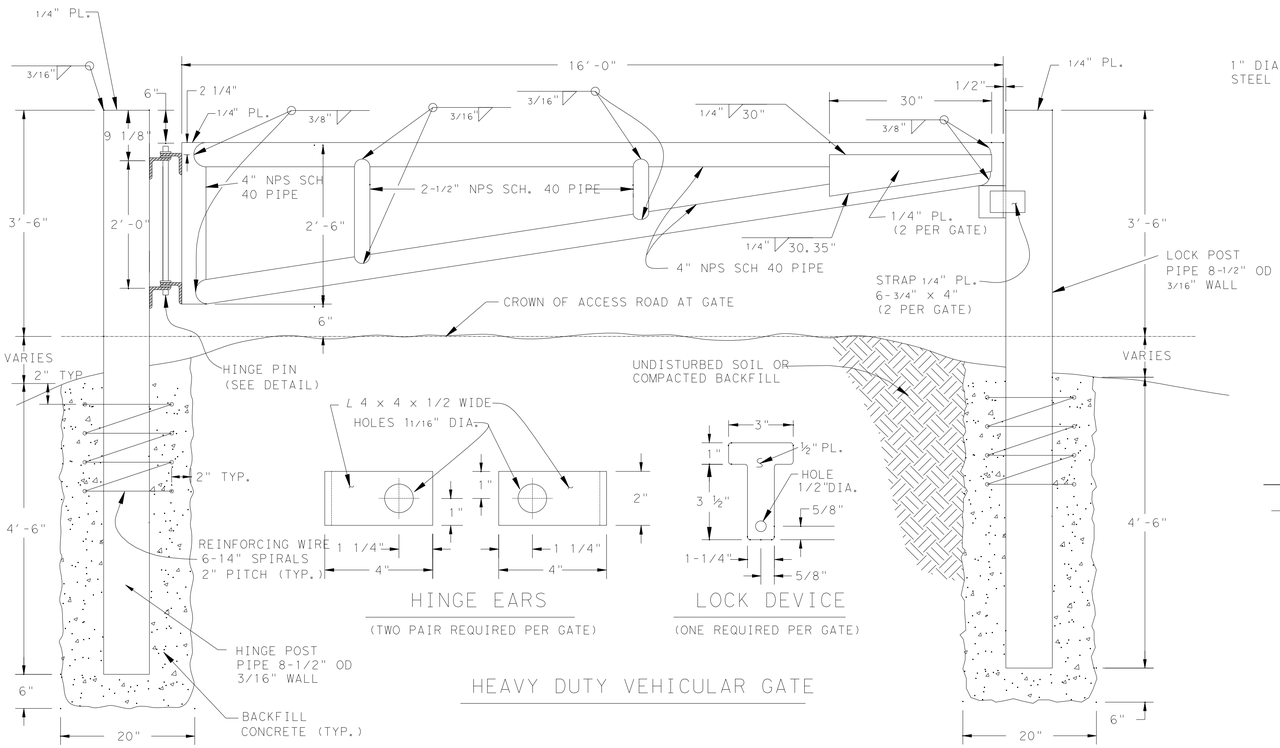

HEAVY DUTY VEHICULAR GATE

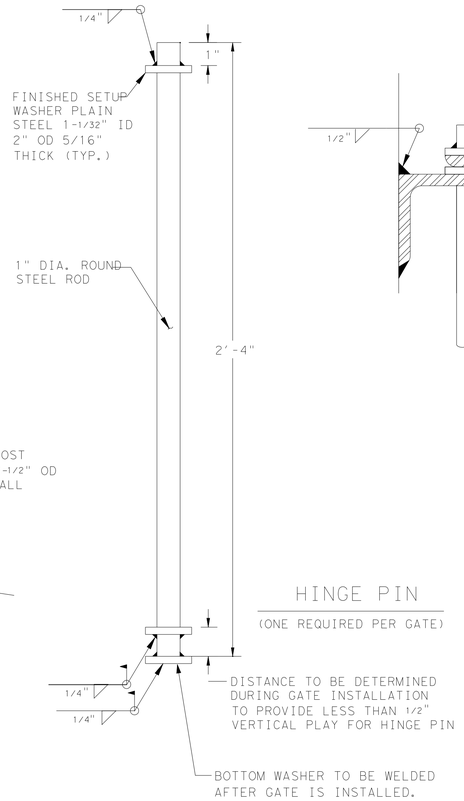

HINGE PIN

(ONE REQUIRED PER GATE)

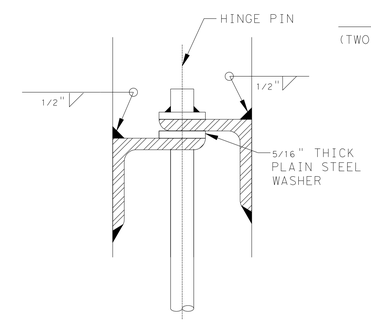

HINGE

(TWO REQUIRED PER GATE)

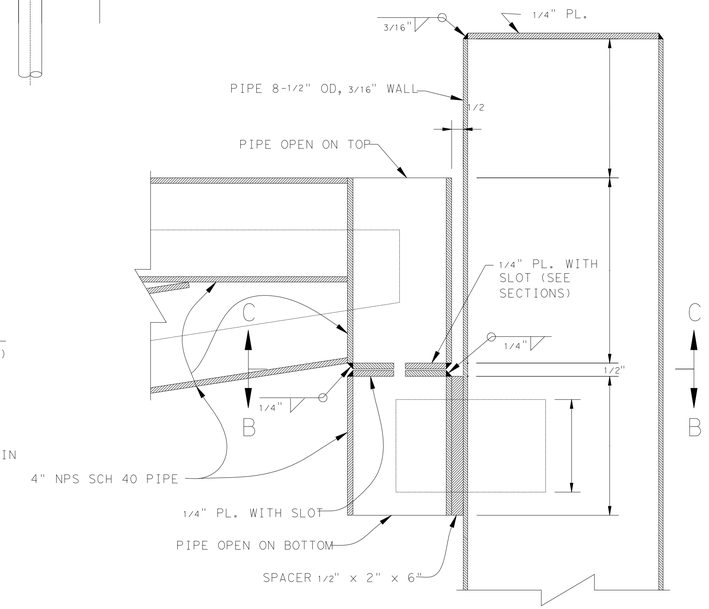

SECTION A-A

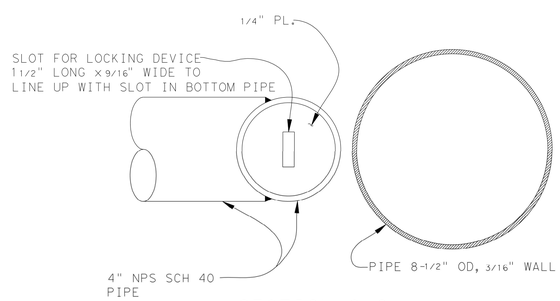

SECTION C-C

BOTTOM VIEW OF TOP PIPE

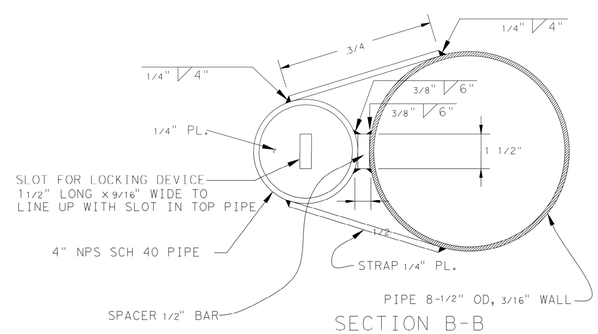

SECTION B-B

TOP VIEW OF BOTTOM PIPE

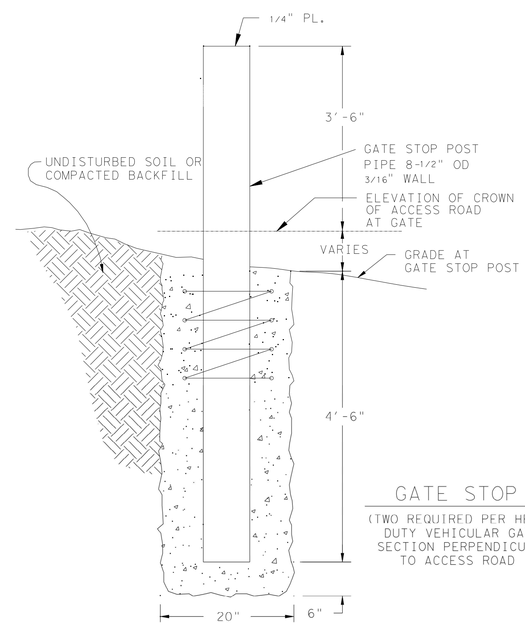

GATE STOP

(TWO REQUIRED PER HEAVY DUTY VEHICULAR GATE)
SECTION PERPENDICULAR TO ACCESS ROAD

NOTES:

1. DRAWING NOT TO SCALE.

S&B INFRASTRUCTURE, LTD.

Engineering Management Technology

S&B Infrastructure, Ltd. Firm Registration Number: 1582

STATE OF TEXAS
PHILLIP J. PAWELEK
82739
REGISTERED PROFESSIONAL ENGINEER

The seal appearing on this document was authorized by PHILLIP J. PAWELEK P.E. 82739, on 7-29, 2009

REVISED 07/29/2009 Phillip J. Pawelek, P.E.

NORTH FLOODWAY
NORTH AND SOUTH LEVEE
HEAVY DUTY VEHICULAR GATE

SHEET 1 OF 1 SHEET

STATE	COUNTY	DRAWN BY: JL/JJL	CHECKED BY: PP	
TEXAS	HIDALGO	PROJECT NO. IBM09T0018		SHEET NO.
REHABILITATION OF NORTH FLOODWAY NORTH AND SOUTH LEVEES (FM 1015 TO BASELINE RD)				15.01

n:\project\u450\u450515\800\workingfiles\Dgn\u450515NS1M0.dgn

LEGEND

Type III Barricade		Channelizing Devices	Flag
Heavy Work Vehicle Trailer Mounted		Truck Mounted Attenuator Portable Changeable	
Flashing Arrow Panel		Message Sign	
Flagger		Sign Post	

Posted Speed ✳	Formula	Minimum Desirable Taper Lengths ✳✳ 10′ Offset	11′ Offset	12′ Offset	Suggested Maximum Spacing of Device On a Taper	On a Tangent	Minimum Sign Spacing X Distance
30	$L = \frac{WS^2}{60}$	150′	165′	180′	30′	60′-75′	120′
35		205′	225′	245′	35′	70′-90′	160′
40		265′	295′	320′	40′	80′-100′	240′
45	L=WS	450′	495′	540′	45′	90′-110′	320′
50		500′	550′	600′	50′	100′-125′	400′
55		550′	605′	660′	55′	110′-140′	500′
60		600′	660′	720′	60′	120′-150′	✳600′
65		650′	715′	780′	65′	130′-165′	✳700′
70		700′	770′	840′	70′	140′-175′	✳800′

✳ Conventional Roads Only

✳✳ Taper lengths have been rounded off.
L=Length of Taper (FT.) W=Width of Offset (FT.) S=Posted Speed (MPH)

TYPICAL USAGE:				
MOBILE	SHORT DURATION	SHORT TERM STATIONARY	INTERMEDIATE TERM STATIONARY	LONG TERM STATIONARY
		✓	✓	

GENERAL NOTES:

1. Unless otherwise stated in the plans, flags attached to signs are REQUIRED.
2. TCP (2-4b) shall be used only on projects that will be at a location for less than two weeks.
3. Existing pavement markings may remain in place for projects less than two weeks in duration.
4. The FORM ONE LINE LEFT (or RIGHT) sign may be used following the RIGHT (or LEFT) LANE CLOSED XXX FT sign. Spacing distance between signs should be the minimum distance indicated.
5. Downstream taper is optional. When used, it should be 100′ minimum length per lane.
6. For intermediate term situations, when it is not feasible to remove and restore pavement markings, the channelization must be made dominant by using a very close spacing. This is especially important in locations of conflicting information, such as where traffic is directed over a double yellow centerline. In such locations a maximum channelizing device spacing of 10 feet is recommended. The 10 foot channelizing device spacing recommendation is intended for the area of conflicting information and not the entire work zone.
7. The Contractor shall submit a sign/sealed traffic control plan to the government three weeks prior to any lane closure operations.

TYPICAL PANEL DETAIL
FOR SKID OR POST TYPE BARRICADES

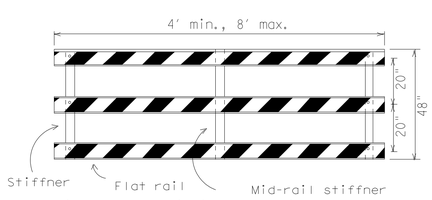

Stiffner may be inside or outside of support.

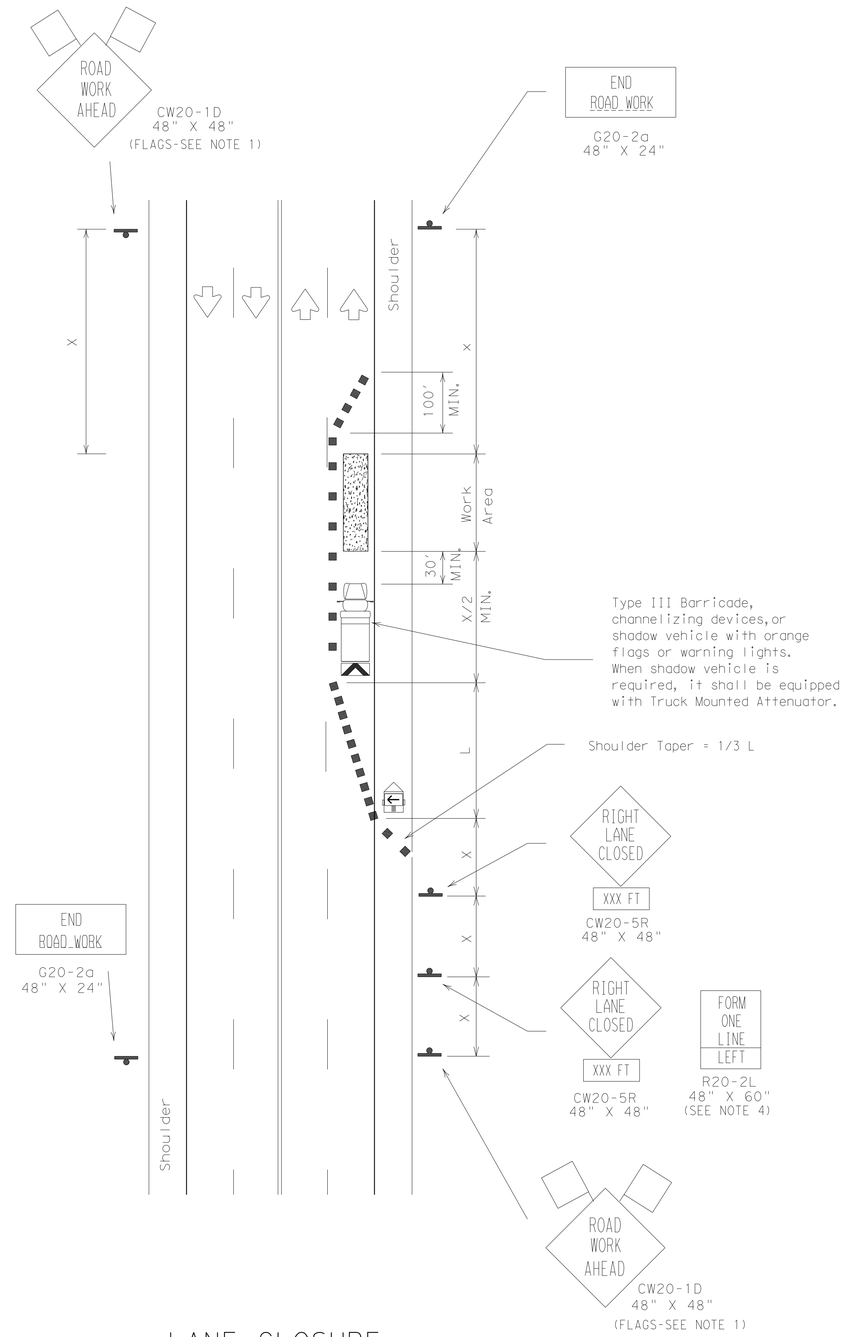

LANE CLOSURE

One Lane Closed
Less Than Two Weeks

TYPE III BARRICADES

1. Type III Barricades shall be placed as shown in plans and/or directed by the COR.
2. Barricades extending across a roadway should have stripes that slopes downward in the direction toward which traffic must turn in detouring. When both right and left turns are provided, the chevron striping may slope downward in both directions from the center of the barricade.
3. Striping of rails, for the right side of the roadway, should slope downward to the left side of the roadway, striping should slope downward to the right.
4. Identification markings may be shown only on the back of the barricade rails. The maximum height of letters and/or company logos used for identification shall be 1".
5. Barricades shall not be placed parallel to traffic unless an adequate clear zone is provided.
6. Warning lights shall NOT be installed on barricades.
7. Where barricades require the use of weights to keep from turning over, the use of sandbags with dry, cohesionless sand is recommended. The sandbags will be tied shut to keep the sand from spilling and to maintain a constant weight. Rock, concrete, iron, steel or other solid object will NOT be permitted. Sandbags should weigh a minimum of 35 lbs and a maximum of 50 lbs. Sandbags shall be made of a durable material that tears upon vehicular impact. Rubber (such as tire inner tubes) shall not be used for sandbags. Sandbags shall only be placed along or upon the base supports of the device and shall not be suspended above level or hung with rope, wire, chains or other fasteners.
8. The three rails on Type III Barricades shall be reflectorized orange and reflective white stripes on one side facing one-way traffic and both sides for two-way traffic.
9. Signs should be mounted on independent supports at a 7 foot mounting height in center of roadway. The sign should be a minimum of 10 feet behind Type III Barricades.

Barricades shall not be used as a sign support.

TYPICAL STRIPING DETAIL FOR BARRICADE RAIL

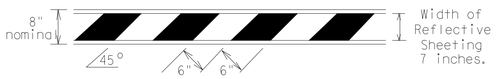

INTERNATIONAL BOUNDARY AND WATER COMMISSION
COMISION INTERNACIONAL DE LIMITES Y AGUAS

S&B INFRASTRUCTURE, LTD.
Engineering Management Technology

S&B Infrastructure, Ltd. Firm Registration Number: 1582

STATE OF TEXAS
PHILLIP J. PAWELEK
82739
REGISTERED PROFESSIONAL ENGINEER

The seal appearing on this document was authorized by PHILLIP J. PAWELEK P.E. 82739, on 6-11, 2009.

Phillip J. Pawelek, P.E.

TRAFFIC CONTROL DETAILS
TYPE III BARRICADES AND
LANE CLOSURES

SHEET 1 OF 1 SHEET

STATE	COUNTY	DRAWN BY: JL/JJL	CHECKED BY: PP	
TEXAS	HIDALGO	PROJECT NO. IBM09T0018		SHEET NO.
REHABILITATION OF NORTH FLOODWAY NORTH AND SOUTH LEVEES (FM 1015 TO BASELINE RD)				15.02

N:\Project\U0450\U0450515\800\WorkingFiles\Dgn\U450515STRTCPB.dgn

Barricade and Construction (BC) Standard Sheets General Notes:

1. The Barricade and Construction Standard Sheets (BC sheets) are intended to show typical examples for placement of temporary traffic control devices, construction pavement markings, and typical work zone signs. The information contained in these sheets meet or exceed the requirements shown in the "Texas Manual on Uniform Traffic Control Devices" (TMUTCD).
2. The development and design of the Traffic Control Plan (TCP) is the responsibility of the Engineer.
3. The Contractor may propose changes to the TCP that are signed and sealed by a licensed professional engineer for approval. The Engineer may develop, sign and seal Contractor proposed changes.
4. The Contractor is responsible for installing and maintaining the traffic control devices as shown in the plans. The Contractor may not move or change the approximate location of any device without the approval of the Engineer.
5. Geometric design of lane shifts and detours should, when possible, meet the applicable design criteria contained in manuals such as the American Association of State Highway and Transportation Officials (AASHTO), "A Policy on Geometric Design of Highways and Streets", the TxDOT "Roadway Design Manual" or engineering judgment.
6. When projects abut, the Engineer(s) may omit the END ROAD WORK, TRAFFIC FINES DOUBLE, and other advance warning signs if the signing would be redundant and the work areas appear continuous to the motorists. If the adjacent project is completed first, the Contractor shall erect the necessary warning signs as shown on these sheets, the TCP sheets or as directed by the Engineer. The BEGIN ROAD WORK NEXT X MILES sign shall be revised to show appropriate work zone distance.
7. The Engineer may require duplicate warning signs on the median side of divided highways where median width will permit and traffic volumes justify the signing.
8. All signs shall be constructed in accordance with the details found in the "Standard Highway Sign Designs for Texas," latest edition. Sign details not shown in this manual shall be shown in the plans or the Engineer shall provide a detail to the Contractor before the sign is manufactured.
9. The temporary traffic control devices shown in the illustrations of the BC sheets are examples. As necessary, the Engineer will determine the most appropriate traffic control devices to be used.
10. As shown on BC(2), the OBEY WARNING SIGNS STATE LAW sign and the WORK ZONE TRAFFIC FINES DOUBLE sign with plaque shall be erected in advance of the CSJ limits. The BEGIN ROAD WORK NEXT X MILES, CONTRACTOR and END ROAD WORK signs shall be erected at or near the CSJ limits.
11. Except for devices required by Note 10, traffic control devices should be in place only while work is actually in progress or a definite need exists.
12. The Engineer has the final decision on the location of all traffic control devices.
13. Inactive equipment and work vehicles, including workers' private vehicles must be parked away from travel lanes. They should be as close to the right-of-way line as possible, or located behind a barrier or guardrail, or as approved by the Engineer.

Worker Safety Apparel Notes:

1. Workers on foot who are exposed to traffic or to construction equipment within the right-of-way shall wear high-visibility safety apparel meeting the requirements of ISEA "American National Standard for High-Visibility Apparel" labeled as ANSI 107-2004 standard performance for Class 2 or 3 risk exposure. Class 3 garments should be considered for high traffic volume work areas or night time work.

DISCLAIMER
The use of this standard is governed by the "Texas Engineering Practice Act". No warranty of any kind is made by TxDOT for any purpose whatsoever. TxDOT assumes no responsibility for the conversion of this standard to other formats or for incorrect results or damages resulting from its use.

Only pre-qualified products shall be used. The "Compliant Work Zone Traffic Control Devices List" (CWZTCD) describes prequalified products and their sources and may be found on-line at the web address given below or by contacting:

Texas Department of Transportation
Traffic Operations Division - TE
Phone (512) 416-3134

WEB ADDRESSES FOR REFERENCED DOCUMENTS

Compliant Work Zone Traffic Control Devices List (CWZTCD)
http://www.txdot.gov/publications/traffic.htm

Texas Manual on Uniform Traffic Control Devices (TMUTCD)
http://www.txdot.gov/publications/traffic.htm

Standard Highway Sign Designs for Texas (SHSD)
http://www.txdot.gov/publications/traffic.htm

Traffic Engineering Standard Sheets
http://www.txdot.gov/business/disclaim.htm

Material Producer List
http://www.txdot.gov/business/producer*list.htm

Departmental Material Specifications (DMS)
http://www.txdot.gov/services/construction/material*specifications/

Roadway Design Manual
http://www.txdot.gov/services/general*services/manuals.htm

LEVELS DISPLAYED

1	2	3	4	5	6	7	8	9	10	11	12	13	14	15	16
17	18	19	20	21	22	23	24	25	26	27	28	29	30	31	32
33	34	35	36	37	38	39	40	41	42	43	44	45	46	47	48
49	50	51	52	53	54	55	56	57	58	59	60	61	62	63	

ACC:

S&B INFRASTRUCTURE, LTD.
Engineering · Management · Technology
S&B Infrastructure, Ltd. Firm Registration Number: 1582

STATE OF TEXAS
PHILLIP J. PAWELEK
82739
REGISTERED PROFESSIONAL ENGINEER

The seal appearing on this document was authorized by PHILLIP J. PAWELEK P.E. 82739, on 6-11, 2009.

Phillip J. Pawelek, P.E.

BARRICADE AND CONSTRUCTION GENERAL NOTES AND REQUIREMENTS

SHEET 1 OF 12 SHEET

STATE: TEXAS
COUNTY: HIDALGO
DRAWN BY: MK
CHECKED BY: --
PROJECT NO. IBM09T0018
REHABILITATION OF NORTH FLOODWAY NORTH AND SOUTH LEVEES (FM 1015 TO BASELINE RD)
SHEET NO. 15.03

n:\project\u0450\u0450515\800*workingfiles\dgn\0450515BC*STDS.dgn

TYPICAL LOCATION OF CROSSROAD SIGNS

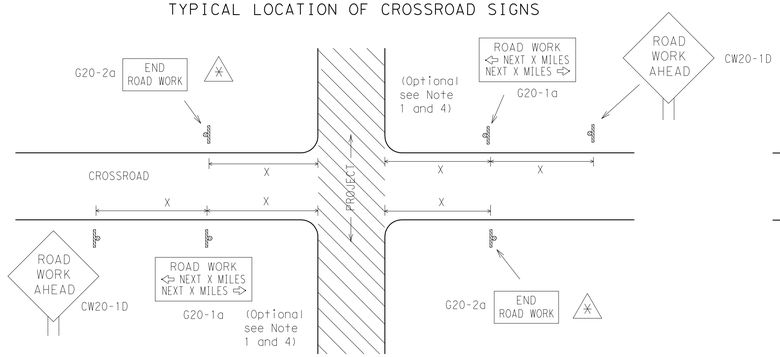

✳ May be mounted on back of CW20-1D sign with approval of engineer. (See note 2 below)

1. The typical minimum signing on a crossroad approach should be a CW20-1D ROAD WORK AHEAD sign and a G20-2a END ROAD WORK sign, unless noted otherwise in plans.
2. The Engineer may use the reduced size 36" x 36" ROAD WORK AHEAD (CW20-1D) sign mounted back to back with the reduced size 36" x 18" END ROAD WORK (G20-2a) sign on low volume crossroads (see Note 4 under "Typical Construction Warning Sign Size and Spacing"). See the "Standard Highway Sign Designs for Texas" manual for sign details. The Engineer may omit the advance warning signs on low volume crossroads. The Engineer will determine whether a road is low volume. This information shall be shown in the plans.
3. Based on existing field conditions, the Engineer/Inspector may require additional signs such as FLAGGER AHEAD, LOOSE GRAVEL, or other appropriate signs. When additional signs are required, these signs will be considered part of the minimum requirements. The Engineer/Inspector will determine the proper location and spacing of any sign not shown on the BC sheets, Traffic Control Plan sheets or the Work Zone Standard Sheets.
4. The G20-1a sign shall be required at high volume crossroads to advise motorists of the length of construction in either direction from the intersection. The Engineer will determine whether a roadway is considered high volume.
5. Additional traffic control devices may be shown elsewhere in the plans for higher volume crossroads.
6. When work occurs in the intersection area, appropriate traffic control devices, as shown elsewhere in the plans or as determined by the Engineer/Inspector, shall be in place.

T-INTERSECTION

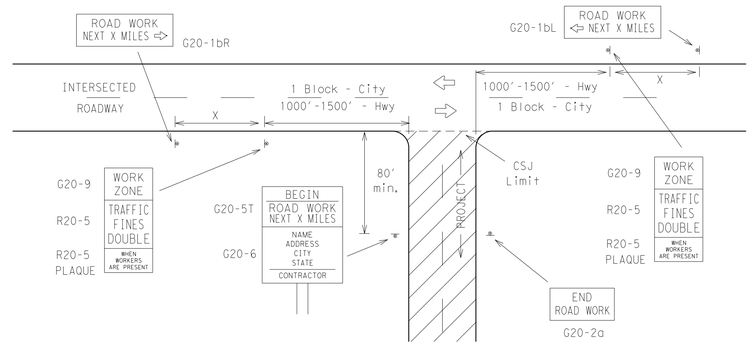

CSJ LIMITS AT T-INTERSECTION

1. The Engineer will determine the types and location of any additional traffic control devices, such as a flagger and accompanying signs, or other signs, that should be used when work is being performed at or near an intersection.
2. If construction closes the road at a T-intersection the Contractor shall place the G20-6 "Contractor Name" sign behind the Type III Barricades for the road closure (see BC(10) also). The G20-1bL and G20-1bR signs shall be replaced by the detour signing called for in the plans.

SIZE

Sign Number or Series	Conventional Road	Expressway/ Freeway
CW20, CW21, CW22, CW23, CW25 [4]	48" x 48"	48" x 48"
CW1, CW2, CW7, CW8, CW9, CW11, CW14	36" x 36"	48" x 48"
CW3, CW4, CW5, CW6, CW8-3, CW10, CW12	48" x 48"	48" x 48"

SPACING

Posted Speed	Sign Spacing "X" △
MPH	Feet (Apprx.)
30	120
35	160
40	240
45	320
50	400
55	500 [2]
60	600 [2]
65	700 [2]
70	800 [2]
75	900 [2]
80	1000 [2]
✳	✳ [3]

✳ For typical sign spacings on divided highways, expressways and freeways, see Part 6 of the "Texas Manual on Uniform Traffic Control Devices" (TMUTCD) typical application diagrams or TCP Standard Sheets.

△ Minimum distance from work area to first Advance Warning sign nearest the work area and/or distance between each additional sign.

General Notes:

1. Special or larger size signs may be used as necessary.
2. Distance between signs should be increased as required to have 1500 feet advance warning.
3. Distance between signs should be increased as required to have ½ mile or more advance warning.
4. 36" x 36" ROAD WORK AHEAD (CW20-1D) signs may be used on low volume crossroads at the discretion of the Engineer. See Note 2 under "Typical Location of Crossroad Signs".
5. Only diamond shaped warning sign sizes are indicated.
6. See sign size listing in "TMUTCD", Sign Appendix or the "Standard Highway Sign Designs for Texas" manual for complete list of available sign design sizes.

R20-3
Legend/Border - Black
Background - White

WORK AREAS IN MULTIPLE LOCATIONS WITHIN CSJ LIMITS

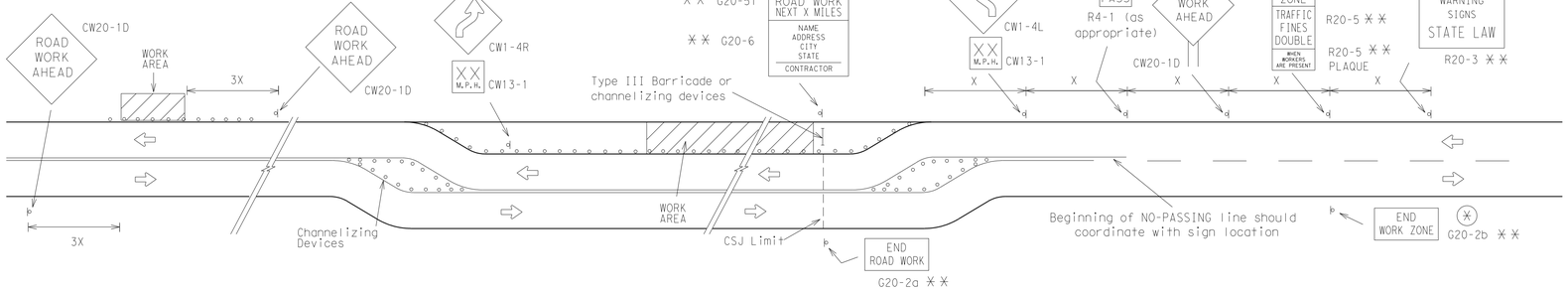

When extended distances occur between minimal work areas, the Engineer/Inspector should ensure additional Road Work Ahead (CW20-1D) signs are placed in advance of these work areas to remind drivers they are still within the project limits. See the applicable TCP sheets for exact location and spacing of signs and channelizing devices.

SAMPLE LAYOUT OF SIGNING FOR WORK BEGINNING AT THE CSJ LIMITS

SAMPLE LAYOUT OF SIGNING FOR WORK BEGINNING DOWNSTREAM OF THE CSJ LIMITS

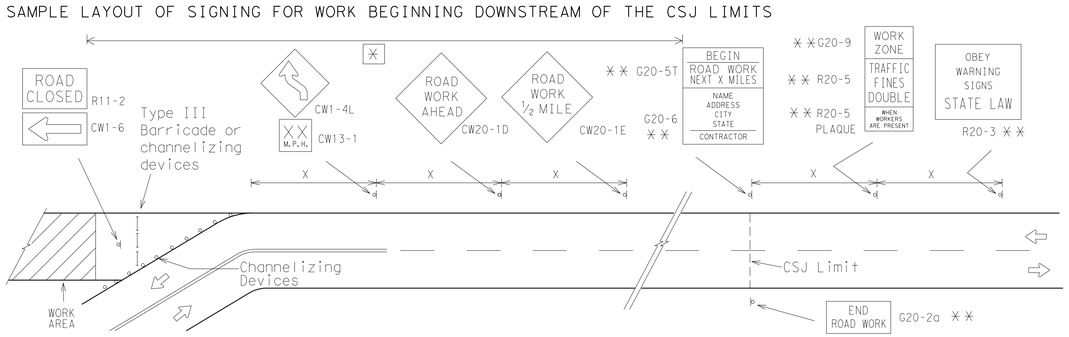

NOTES

The Contractor shall determine the appropriate distance to be placed on the G20-1 series signs and G20-5T sign for each specific project. This distance shall replace the "X" and shall be rounded to the nearest whole mile with the approval of the Engineer. No decimals shall be used.

✳ The G20-9T and G20-2b shall be used when advance signs are required outside the CSJ Limits. They inform the motorist of entering or leaving a work zone where traffic fines may double if workers are present.

✳✳ Required CSJ Limit signing. See Note 10 on BC(1).

✳ Area for placement of "ROAD WORK AHEAD" sign and other signs or devices as called for on the Traffic Control Plan.

LEGEND

Sign

Channelizing Devices

Type III Barricade

X See Typical Construction Warning Sign Size and Spacing chart or the TMUTCD for sign spacing requirements.

DISCLAIMER
The use of this standard is governed by the "Texas Engineering Practice Act". No warranty of any kind is given by TxDOT or any of its employees with respect to the suitability of the conversion of this standard to other formats or for incorrect results or damages resulting from its use.

LEVELS DISPLAYED

	1	2	3	4	5	6	7	8	9	10	11	12	13	14	15	16	ACC:
1	2	3	4	5	6	7	8	9	10	11	12	13	14	15	16	17	1
7	18	19	20	21	22	23	24	25	26	27	28	29	30	31	32		2
31	33	34	35	36	37	38	39	40	41	42	43	44	45	46	47	48	4
49	50	51	52	53	54	55	56	57	58	59	60	61	62	63	64		28

S&B INFRASTRUCTURE, LTD.
Engineering Management Technology
S&B Infrastructure, Ltd. Firm Registration Number: 1582

STATE OF TEXAS
PHILLIP J. PAWELEK
82739
REGISTERED PROFESSIONAL ENGINEER

The seal appearing on this document was authorized by PHILLIP J. PAWELEK P.E. 82739, on 6-11, 2009.

Phillip J. Pawelek, P.E.

BARRICADE AND CONSTRUCTION PROJECT LIMIT STANDARD

SHEET 2 OF 12 SHEET

STATE	COUNTY	DRAWN BY: MK	CHECKED BY: --	
TEXAS	HIDALGO	PROJECT NO. IBM09T0018		SHEET NO.
REHABILITATION OF NORTH FLOODWAY NORTH AND SOUTH LEVEES (FM 1015 TO BASELINE RD)				15.04

m:\project\u0450\u0450515\800*working\files\dgn\0450515BC*STD5.dgn

TYPICAL APPLICATION OF WORK ZONE SPEED LIMIT SIGNS

Work zone speed limits shall be regulatory, established in accordance with the "Procedures for Establishing Speed Zones," and approved by the Texas Transportation Commission, or by City Ordinance when within Incorporated City Limits.

Reduced speeds should only be posted in the vicinity of work activity and not throughout the entire project.

Regulatory work zone speed signs (R2-1) shall be removed or covered during periods when they are not needed.

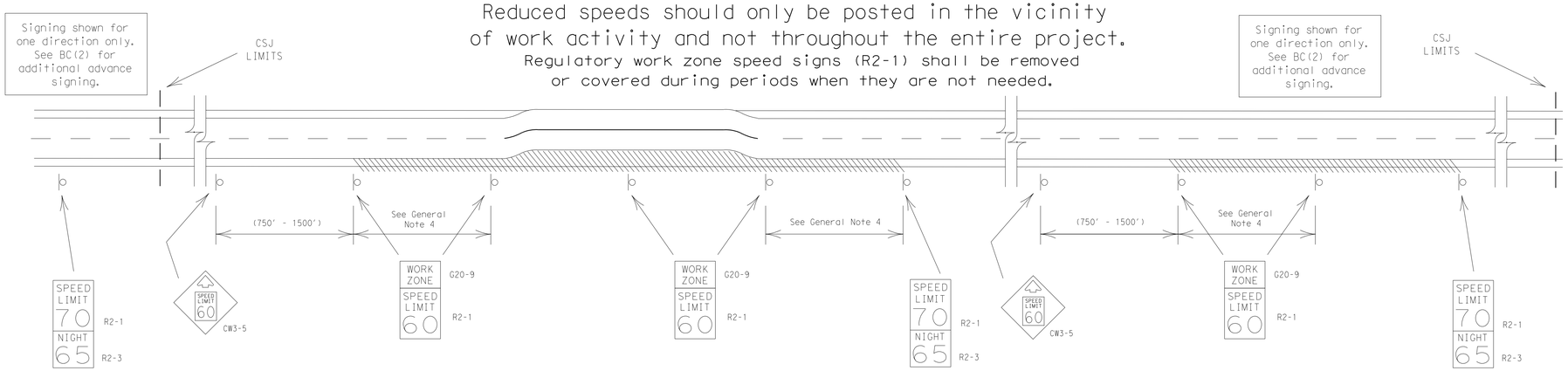

GUIDANCE FOR USE:

LONG/INTERMEDIATE TERM WORK ZONE SPEED LIMITS

This type of work zone speed limit should be included on the design of the traffic control plans when restricted geometrics with a lower design speed are present in the work zone and modification of the geometrics to a higher design speed is not feasible.

Long/Intermediate Term Work Zone Speed Limit signs, when approved as described above, should be posted and visible to the motorist when work activity is present. Work activity may also be defined as a change in the roadway that requires a reduced speed for motorists to safely negotiate the work area, including:

a) rough road or damaged pavement surface
b) substantial alteration of roadway geometrics (diversions)
c) construction detours
d) grade
e) width
f) other conditions readily apparent to the driver

As long as any of these conditions exist, the work zone speed limit signs should remain in place.

SHORT TERM WORK ZONE SPEED LIMITS

This type of work zone speed limit should be included on the design of the traffic control plans when workers or equipment are not behind concrete barrier, when work activity is within 15 feet of pavement edge or actually on the pavement.

Short Term Work Zone Speed Limit signs should be posted and visible to the motorists only when work activity is present. When work activity is not present, signs shall be removed or covered.
(See Removing or Covering on BC(4)).

GENERAL NOTES:

1. Regulatory work zone speed limits should be used only for sections of construction projects where speed control is of major importance.
2. Regulatory work zone speed limit signs shall be placed on supports at a 7 foot minimum mounting height.
3. Speed zone signs are illustrated for one direction of travel and are normally posted for each direction of travel.
4. Frequency of work zone speed limit signs should be:
   40 mph and greater 0.2 to 2 miles
   35 mph and less 0.2 to 1 mile
5. Regulatory speed limit signs shall have black legend and border on a white reflective background (See "Reflective Sheeting" on BC(4)).
6. Fabrication, errection and maintenance of the CW3-5 sign, G20-9 plaque and the R2-1 and R2-3 signs shall not be paid for directly, but shall be considered subsidiary to Item 502.
7. Turning signs from view, laying signs over or down will not be allowed, unless otherwise noted.
8. Techniques that may help reduce traffic speeds include but are not limited to:
   A. Law enforcement.
   B. Flagger stationed next to sign.
   C. Portable changeable message sign (PCMS).
   D. Low-power (drone) radar transmitter.
   E. Speed monitor trailers or signs.
9. Speeds shown on details above are for illustration only.
   Work Zone Speed Limits should only be posted as approved for each project.

DISCLAIMER
The use of this standard is governed by the "Texas Engineering Practice Act". No warranty of any kind is made by TxDOT for any purpose whatsoever. TxDOT assumes no responsibility for the conversion of this standard to other formats or for incorrect results or damages resulting from its use.

LEVELS DISPLAYED

																ACC:
1	2	3	4	5	6	7	8	9	10	11	12	13	14	15	16	
17	18	19	20	21	22	23	24	25	26	27	28	29	30	31	32	
33	34	35	36	37	38	39	40	41	42	43	44	45	46	47	48	
49	50	51	52	53	54	55	56	57	58	59	60	61	62	63		

S&B INFRASTRUCTURE, LTD.
Engineering Management Technology
S&B Infrastructure, Ltd. Firm Registration Number: 1582

STATE OF TEXAS
PHILLIP J. PAWELEK
82739
REGISTERED
PROFESSIONAL ENGINEER

The seal appearing on this document was authorized by PHILLIP J. PAWELEK P.E. 82739, on 6-11, 2009.

Phillip J. Pawelek, P.E.

BARRICADE AND CONSTRUCTION
WORK ZONE SPEED LIMIT
STANDARD

SHEET 3 OF 12 SHEET

STATE	COUNTY	DRAWN BY: MK	CHECKED BY: --	
TEXAS	HIDALGO	PROJECT NO.	IBM09T0018	SHEET NO.
REHABILITATION OF NORTH FLOODWAY NORTH AND SOUTH LEVEES (FM 1015 TO BASELINE RD)				15.05

n:\project\u0450\u045015\800*workfiles\dgn\045015BC*STD5.dgn

DISCLAIMER
The use of this standard is governed by the "Texas Engineering Practice Act". No warranty of any kind is made by TxDOT for any purpose whatsoever. TxDOT assumes no responsibility for the conversion of this standard to other formats or for incorrect results or damages resulting from its use.

LEVELS DISPLAYED

ACC:

GENERAL NOTES FOR WORK ZONE SIGNS

1. Contractor shall install and maintain signs in a straight and plumb condition and/or as directed by the Engineer.
2. Wooden sign posts shall be painted white.
3. Barricades shall NOT be used as sign supports.
4. Nails shall NOT be used to attach signs to any support.
5. All signs shall be installed in accordance with the plans or as directed by the Engineer. Signs shall be used to regulate, warn, and guide the traveling public safely through the work zone.
6. The Contractor may furnish either the sign design shown in the plans or in the "Standard Highway Sign Designs for Texas" (SHSD). The Engineer/Inspector may require the Contractor to furnish other work zone signs that are shown in the TMUTCD but may have been omitted from the plans. Any variation in the plans shall be documented by written agreement between the Engineer and the Contractor's Responsible Person. All changes must be documented in writing before being implemented. This can include documenting the changes in the Inspector's TxDOT diary and having both the Inspector and Contractor initial and date the agreed upon changes.
7. The Contractor shall furnish sign supports listed in the "Compliant Work Zone Traffic Control Device List" (CWZTCD). The Contractor shall install the sign support in accordance with the manufacturer's recommendations. If there is a question regarding installation procedures, the Contractor shall furnish the Engineer a copy of the manufacturer's installation recommendations so the Engineer can verify the correct procedures are being followed.
8. The Contractor is responsible for installing signs on approved supports and replacing signs with damaged or cracked substrates and/or damaged or marred reflective sheeting as directed by the Engineer/Inspector.
9. Identification markings may be shown only on the back of the sign substrate. The maximum height of letters and/or company logos used for identification shall be 1 inch.
10. The Contractor shall replace damaged wood posts. New or damaged wood sign posts shall not be spliced.

DURATION OF WORK (as defined by the "Texas Manual on Uniform Traffic Control Devices" Part 6)

1. The types of sign supports, sign mounting height, the size of signs, and the type of sign substrates can vary based on the type of work being performed. The Engineer is responsible for selecting the appropriate size sign for the type of work being performed. The Contractor is responsible for ensuring the sign support, sign mounting height and substrate meets manufacturer's recommendations in regard to crashworthiness and duration of work requirements.
   a. Long-term stationary - work that occupies a location more than 3 days.
   b. Intermediate-term stationary - work that occupies a location more than one daylight period up to 3 days, or nighttime work lasting more than one hour.
   c. Short-term stationary - daytime work that occupies a location for more than 1 hour in a single daylight period.
   d. Short, duration - work that occupies a location up to 1 hour.
   e. Mobile - work that moves continuously or intermittently (stopping for up to approximately 15 minutes.)

SIGN MOUNTING HEIGHT

1. The bottom of Long-term/Intermediate-term signs shall be at least 7 feet, but not more than 9 feet, above the paved surface, except as shown for supplemental plaques mounted below other signs.
2. The bottom of Short-term/Short Duration signs shall be a minimum of 1 foot above the pavement surface but no more than 2 feet above the ground.
3. Long-term/Intermediate-term Signs may be used in lieu of Short-term/Short Duration signing.
4. Short-term/Short Duration signs shall be used only during daylight and shall be removed at the end of the workday. or raised to appropriate Long-term/Intermediate sign height.
5. Regulatory signs shall be mounted at least 7 feet, but not more than 9 feet, above the paved surface regardless of work duration.

SIZE OF SIGNS

1. The Engineer may allow the use of smaller size construction warning signs on secondary roads or city streets where speeds are low if the sign size is listed as an option on the "Typical Construction Warning Sign Size and Spacing" chart shown on BC(2).
2. The Contractor shall furnish the sign sizes shown in plans, the BC Sheets, the TCP sheets or as directed by the Engineer.

SIGN SUBSTRATES

1. The Contractor shall ensure the sign substrate is installed in accordance with the manufacturer's recommendations for the type of sign support that is being used. The CWZTCD lists each substrate that can be used on the different types and models of sign supports.
2. "Mesh" type materials are NOT an approved sign substrate, regardless of the tightness of the weave.
3. All wooden individual sign panels fabricated from 2 or more pieces shall have one or more plywood cleat, 1/2" thick by 6" wide, fastened to the back of the sign and extending fully across the sign. The cleat shall be attached to the back of the sign using wood screws that do not penetrate the face of the sign panel. The screws shall be placed on both sides of the splice and spaced at 6" centers. The Engineer may approve other methods of splicing the sign face.

REFLECTIVE SHEETING

1. All signs shall be retroreflective and constructed of sheeting meeting the color and retro-reflectivity requirements of DMS-8300 for rigid signs or DMS-8310 for roll-up signs. The web address for DMS specifications is shown on BC(1).
2. White sheeting, meeting the requirements of DMS-8300 Type C (High Specific Intensity), shall be used for signs with a white background.
3. Orange sheeting, meeting the requirements of DMS-8300 Type E (Fluorescent Prismatic), shall be used for rigid signs with orange backgrounds.

SIGN LETTERS

1. All sign letters and numbers shall be clear, and open rounded type uppercase alphabet letters as approved by the Federal Highway Administration (FHWA) and as published in the "Standard Highway Sign Design for Texas" manual. Signs, letters and numbers shall be of first class workmanship in accordance with Department Standards and Specifications.

REMOVING OR COVERING

1. When sign messages may be confusing or do not apply, the signs shall be removed or completely covered.
2. Long-term stationary or intermediate stationary signs installed on square metal tubing may be turned away from traffic 90 degrees when the sign message is not applicable. This type of sign support meets the crashworthiness standards regardless of the direction of impact. This technique may not be used for signs installed in the median of divided highways or near any intersections where the sign may be seen from approaching traffic.
3. Signs installed on wooden skids shall not be turned at 90 degree angles to the roadway. These signs should be removed or completely covered when not required.
4. When signs are covered, the material used shall be opaque, such as heavy mil black plastic, or other materials which will cover the entire sign face and maintain their opaque properties under automobile headlights at night, without damaging the sign sheeting.
5. Burlap shall NOT be used to cover signs.
6. Duct tape or other adhesive material shall NOT be affixed to a sign face. These materials can damage the retroreflectivity of sheeting.
7. Signs and anchor stubs shall be removed and holes backfilled upon completion of work.

SIGN SUPPORT WEIGHTS

1. Where sign supports require the use of weights to keep from turning over, the use of sandbags with dry, cohesionless sand is recommended.
2. The sandbags will be tied shut to keep the sand from spilling and to maintain a constant weight.
3. Rock, concrete, iron, steel or other solid objects shall not be permitted for use as sign support weights.
4. Sandbags should weigh a minimum of 35 lbs and a maximum of 50 lbs.
5. Sandbags shall be made of a durable material that tears upon vehicular impact.
6. Rubber (such as tire inner tubes) shall NOT be used for sandbags.
7. Rubber ballasts designed for channelizing devices should not be used for ballast on portable sign supports. Sign supports designed and manufactured with rubber bases may be used when shown on the CWZTCD list.
8. Sandbags shall only be placed along or laid over the base supports of the traffic control device and shall not be suspended above ground level or hung with rope, wire, chains or other fasteners. Sandbags shall be placed along the length of the skids to weigh down the sign support.
9. Sandbags shall NOT be placed under the skid and shall not be used to level sign supports placed on slopes.

STOP/SLOW PADDLES

1. STOP/SLOW paddles are the primary method to control traffic by flaggers. The STOP/SLOW paddle size should be 24" x 24" as detailed below.
2. When used at night, the STOP/SLOW paddle shall be retroreflectorized.
3. STOP/SLOW paddles may be attached to a staff with a minimum length of 6' to the bottom of the sign.
4. Any lights incorporated into the STOP or SLOW paddle faces shall only be as specifically described in Section 6E.03 Hand Signaling Devices in the TMUTCD.

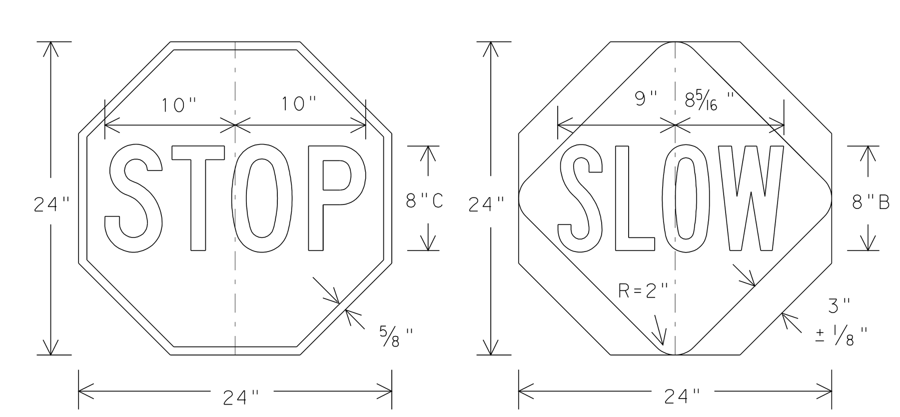

TYPICAL MINIMUM CLEARANCES FOR LONG TERM AND INTERMEDIATE TERM SIGNS

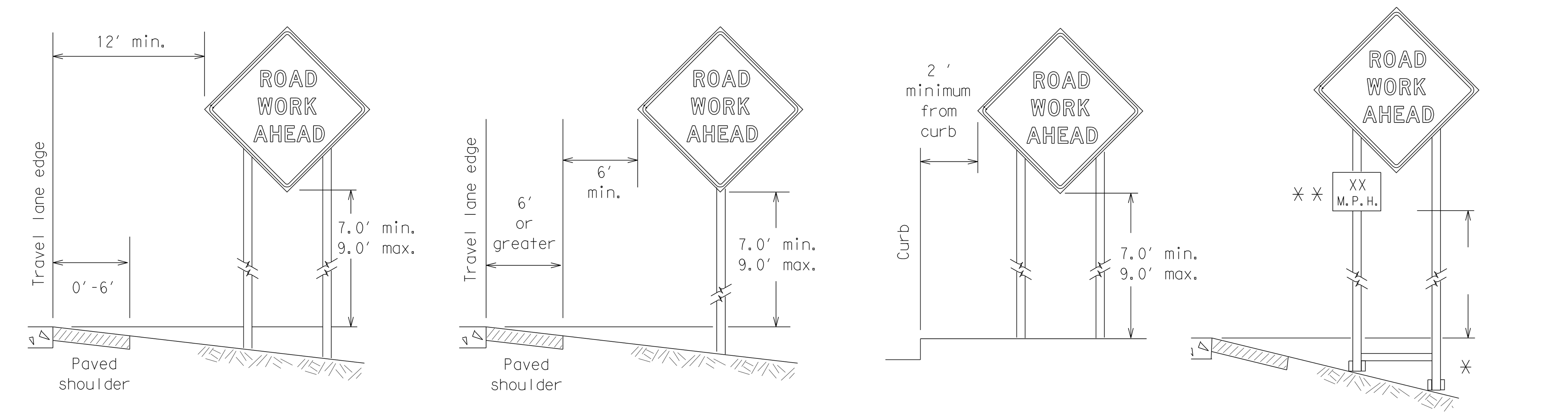

* When placing skid supports on unlevel ground, the leg post lengths must be adjusted so the sign appears straight and plumb. Objects shall NOT be placed under skids as a means of leveling.

6.0' min.

* * When plaques are placed on dual-leg supports, they should be attached to the upright nearest the travel lane. Supplemental plaques (advisory or distance) should not cover the surface of the parent sign.

ATTACHMENT FOR SIGN SUPPORTS

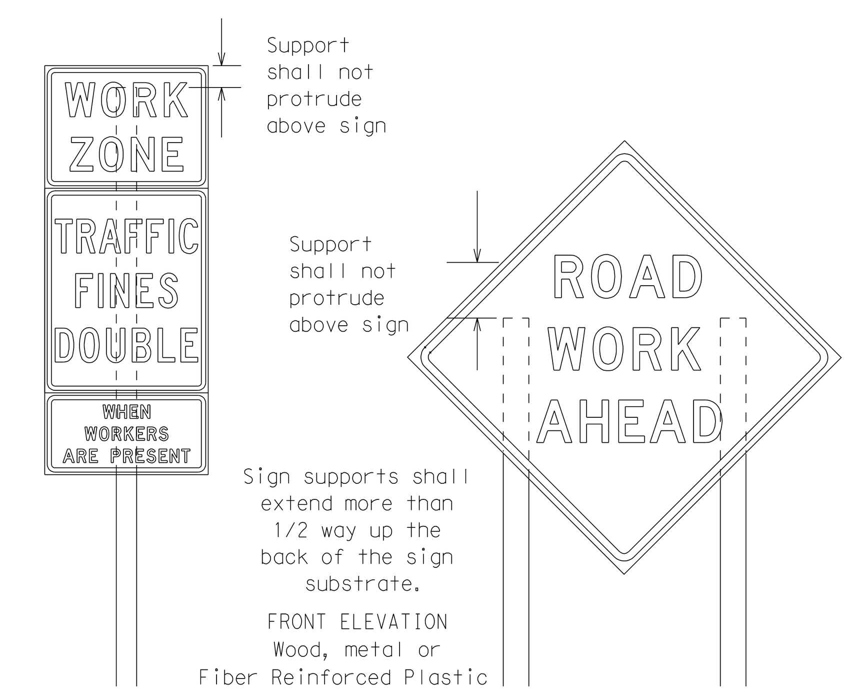

FRONT ELEVATION
Wood, metal or
Fiber Reinforced Plastic

Splicing embedded perforated square metal tubing in order to extend post height will only be allowed when the splice is made using four bolts, two above and two below the spice point. Splice must be located entirely behind the sign substrate, not near the base of the support. Splice insert lengths should be at least 5 times nominal post size, centered on the splice and of at least the same guage material.

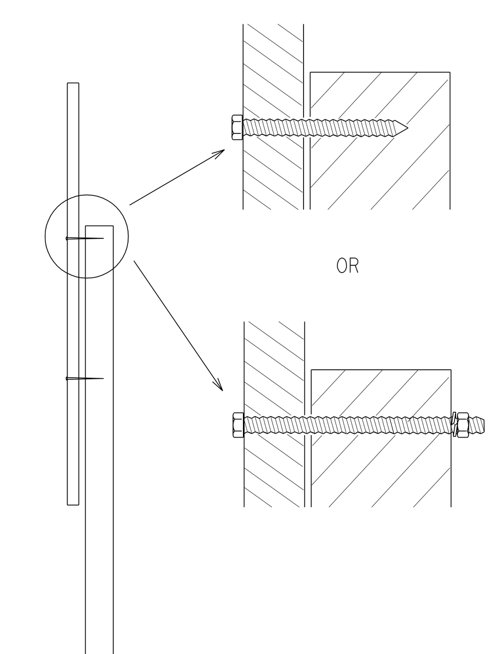

SIDE ELEVATION
Wood

Attachment to wooden supports will be by bolts and nuts or screws. Use TxDOT's or manufacturer's recommended procedures for attaching sign substrates to other types of sign supports

Nails will NOT be allowed.

Each sign shall be attached directly to the sign support. Multiple signs shall not be joined or spliced by any means. Wood supports shall not be extended or repaired by splicing or other means.

CONTRACTOR REQUIREMENTS FOR MAINTAINING PERMANENT SIGNS WITHIN THE PROJECT LIMITS

1. Permanent signs are used to give notice of traffic laws or regulations, call attention to conditions that are potentially hazardous to traffic operations, show route designations, destinations, directions, distances, services, points of interest, and other geographical, recreational, or cultural information. Drivers proceeding through a work zone need the same, if not better route guidance as normally installed on a roadway without construction.
2. When permanent regulatory or warning signs conflict with work zone conditions, remove or cover the permanent signs until the permanent sign message matches the roadway condition.
3. When existing permanent signs are moved and relocated due to construction purposes, they shall be visible to motorists at all times.
4. If existing signs are to be relocated on their original supports, they shall be installed on crashworthy bases as shown on the SMD Standard sheets. The signs shall meet the required mounting heights shown on the BC Sheets or the SMD Standards. This work should be paid for under the appropriate pay item for relocating existing signs.
5. If permanent signs are to be removed and relocated using temporary supports, the Contractor shall use crashworthy supports as shown on the BC sheets or the CWZTCD. The signs shall meet the required mounting heights shown on the BC Sheets or the SMD Standards during construction. This work should be paid for under the appropriate pay item for relocating existing signs.
6. Any sign or traffic control device that is struck or damaged by the Contractor or his/her construction equipment shall be replaced as soon as possible by the Contractor to ensure proper guidance for the motorists. This will be subsidiary to Item 502.

S&B INFRASTRUCTURE, LTD.
Engineering · Management · Technology
S&B Infrastructure, Ltd. Firm Registration Number: 1582

STATE OF TEXAS
PHILLIP J. PAWELEK
82739
REGISTERED PROFESSIONAL ENGINEER

The seal appearing on this document was authorized by PHILLIP J. PAWELEK P.E. 82739, on 6-11, 2009.

BARRICADE AND CONSTRUCTION TEMPORARY SIGN NOTES STANDARD

SHEET 4 OF 12 SHEET

STATE	COUNTY	DRAWN BY: MK	CHECKED BY: --	
TEXAS	HIDALGO	PROJECT NO.	IBM09T0018	SHEET NO.
REHABILITATION OF NORTH FLOODWAY NORTH AND SOUTH LEVEES (FM 1015 TO BASELINE RD)				15.06

N:\Project\u0450\U0450515\800*WorkingFiles\Dgn\0450515BC*STDS.dgn

SKID MOUNTED WOOD SIGN SUPPORTS

LONG/INTERMEDIATE TERM STATIONARY - PORTABLE SKID MOUNTED SIGN SUPPORTS □

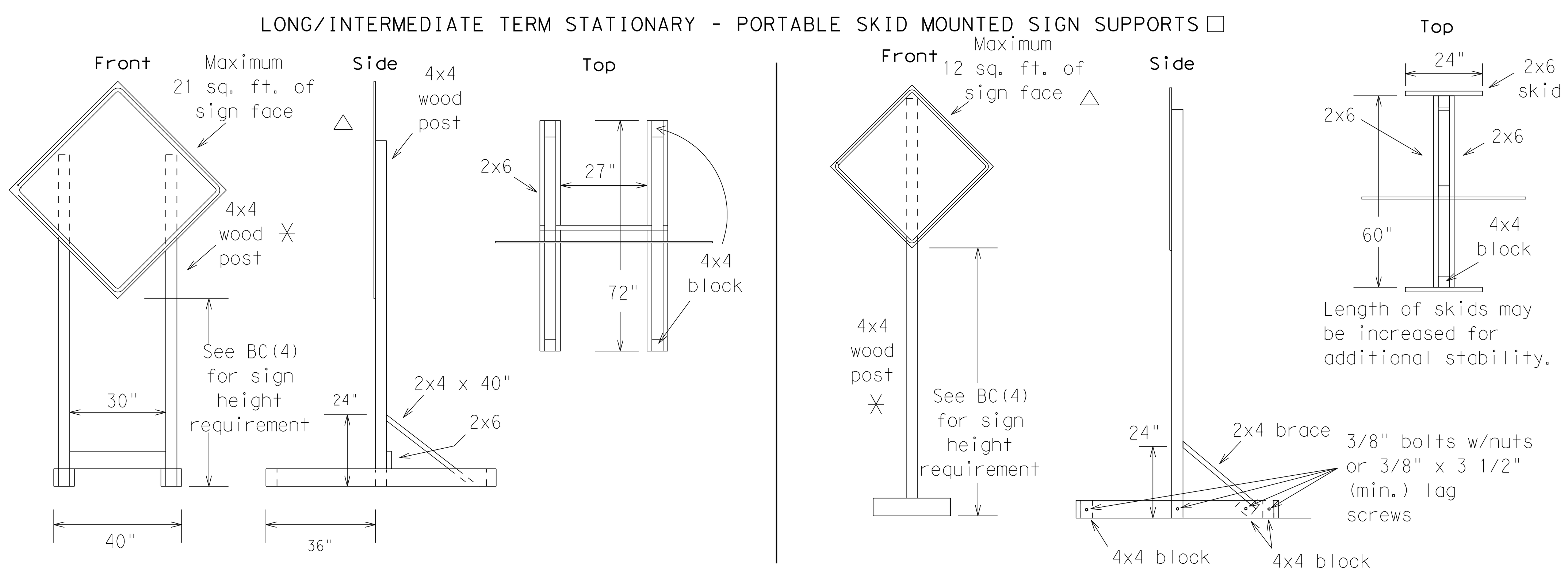

GROUND MOUNTED SIGN SUPPORTS

Refer to the CWZTCD and the manufacturer's installation procedure for each type sign support.
The maximum sign square footage shall adhere to the manufacturer's recommendation.
Two post installations can be used for larger signs.

PERFORATED SQUARE METAL TUBING

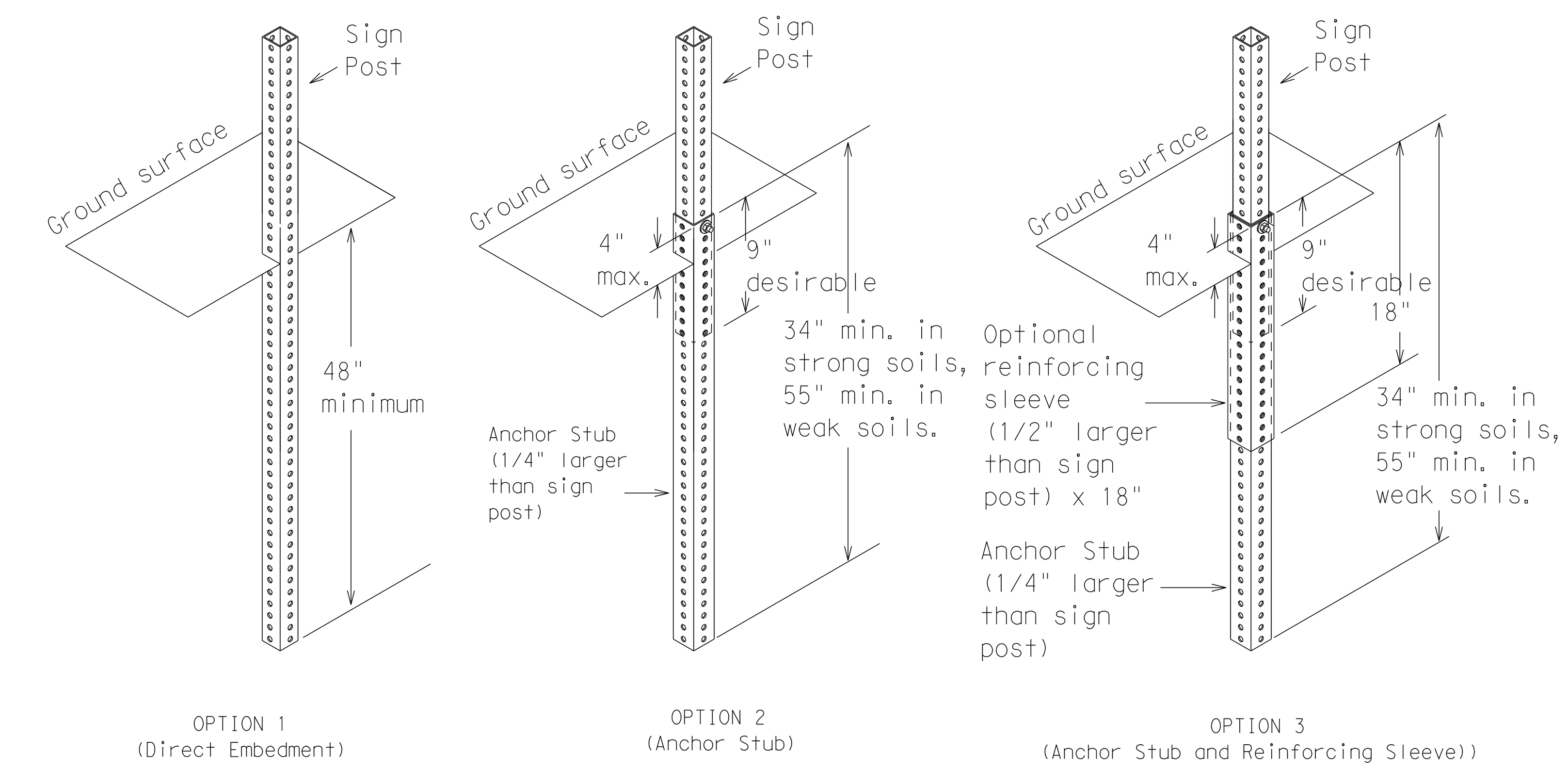

WING CHANNEL

Lap-splice/base bolted anchor

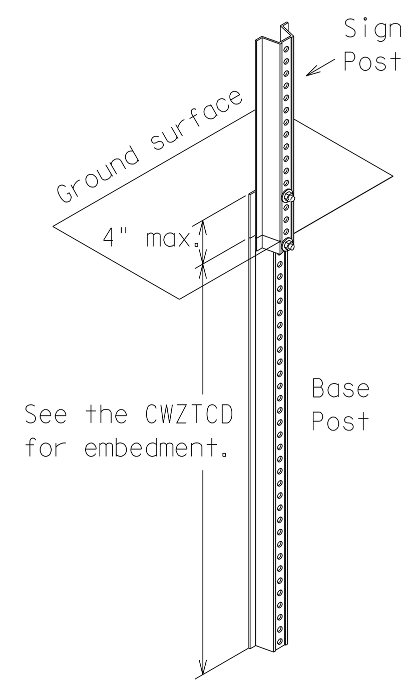

SKID MOUNTED PERFORATED SQUARE STEEL TUBING SIGN SUPPORTS

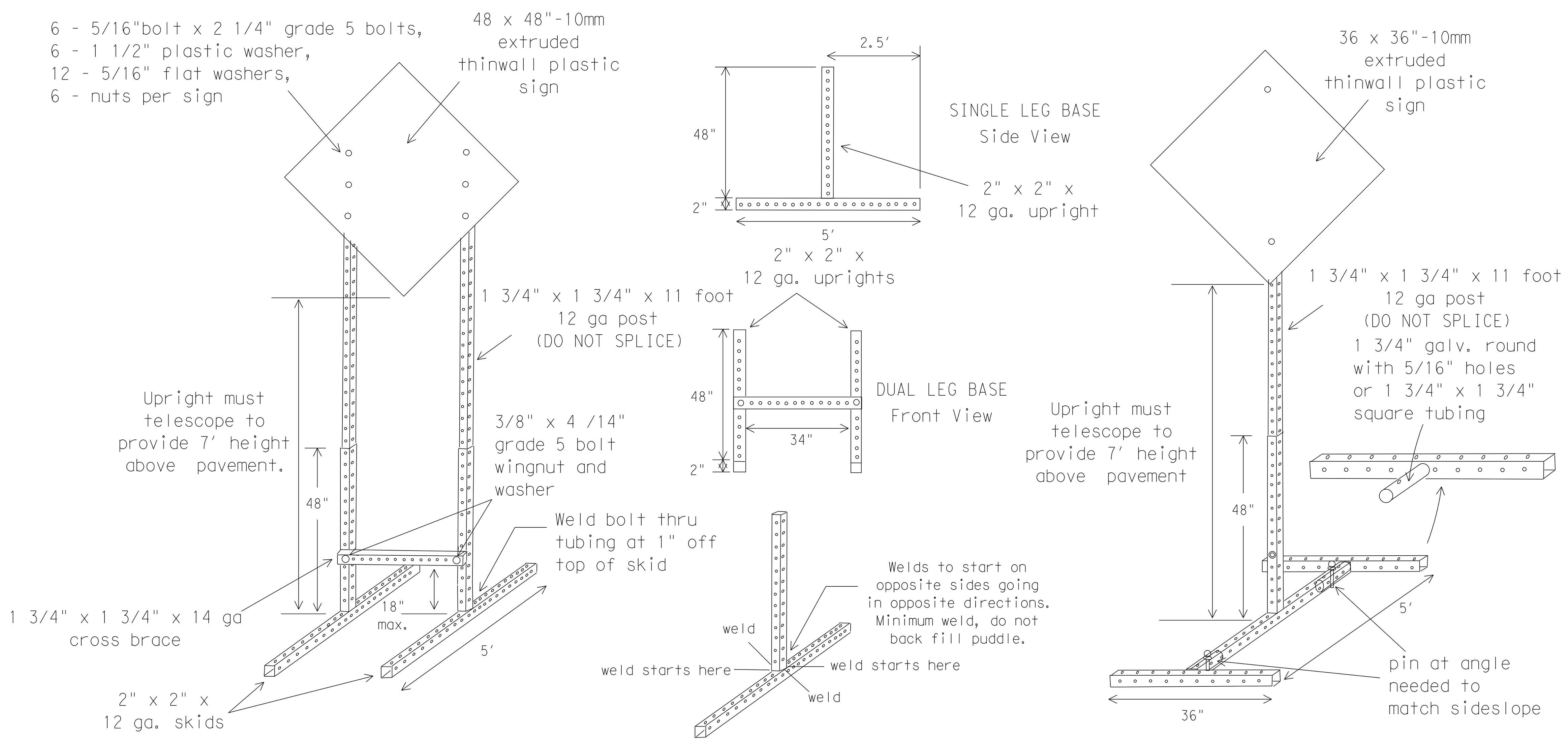

WEDGE ANCHORS

Both steel and plastic Wedge Anchor Systems as shown on the SMD Standard Sheets may be used as temporary sign supports for signs up to 10 square feet of sign face. They may be set in concrete or in sturdy soils if approved by the Engineer. (See web address for "Traffic Engineering Standard Sheets" on BC(1)).

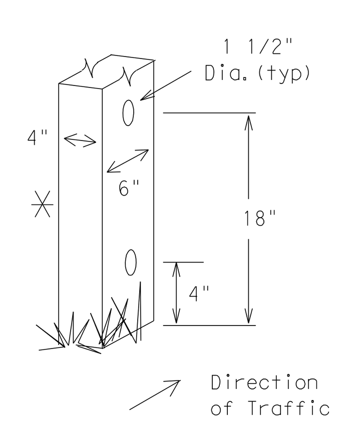

WOOD POST SYSTEM FOR GROUND MOUNTED SIGN SUPPORTS

Nominal Post Size	No. of Posts	Maximum Sq. feet of Sign Face	Minimum Soil Embedment	Drilled Hole(s) Required
4 x 4	1	12	36"	NO
4 x 4	2	21	36"	NO
4 x 6	1	21	36"	YES
4 x 6	2	36	36"	YES

GENERAL NOTES

1. Nails may be used in the assembly of wooden sign supports, but 3/8" bolts with nuts or 3/8" x 3 1/2" lag screws must be used on every joint for final connection.
2. More details of approved Long/Intermediate and Short Term supports can be found on the CWZTCD list. See BC(1) for website location.
3. No more than 2 sign posts shall be placed within a 7 ft. circle, except for specific materials noted on the CWZTCD List.
4. When project is completed, all sign supports and foundations shall be removed from the project site. This will be considered subsidiary to Item 502.

□ See BC(4) for definition of "Work Duration."

⚹ Wood sign posts MUST be one piece. Splicing will NOT be allowed. Posts shall be painted white.

△ See the CWZTCD for the type of sign substrate that can be used for each approved sign support.

DISCLAIMER
The use of this standard is governed by the "Texas Engineering Practice Act". No warranty of any kind is made by TxDOT for any purpose whatsoever. TxDOT assumes no responsibility for the conversion of this standard to other formats or for incorrect results or damages resulting from its use.

LEVELS DISPLAYED ACC:

1	2	3	4	5	6	7	8	9	10	11	12	13	14	15	16
17	18	19	20	21	22	23	24	25	26	27	28	29	30	31	32
33	34	35	36	37	38	39	40	41	42	43	44	45	46	47	48
49	50	51	52	53	54	55	56	57	58	59	60	61	62	63	

INTERNATIONAL BOUNDARY AND WATER COMMISSION
COMISION INTERNACIONAL DE LIMITES Y AGUAS

S&B INFRASTRUCTURE, LTD.
Engineering Management Technology
S&B Infrastructure, Ltd. Firm Registration Number: 1582

STATE OF TEXAS
PHILLIP J. PAWELEK
82739
REGISTERED PROFESSIONAL ENGINEER

The seal appearing on this document was authorized by PHILLIP J. PAWELEK P.E. 82739, on 6-11, 2009.

Phillip J. Pawelek, P.E.

BARRICADE AND CONSTRUCTION TYPICAL SIGN SUPPORT STANDARD

SHEET 5 OF 12 SHEET

STATE	COUNTY	DRAWN BY: MK	CHECKED BY: --	SHEET NO.
TEXAS	HIDALGO	PROJECT NO.	IBM09T0018	
REHABILITATION OF NORTH FLOODWAY NORTH AND SOUTH LEVEES (FM 1015 TO BASELINE RD)				15.07

n:\project\u0450\u0450515\800*workingfiles\dgn\0450515BC*STDS.dgn

DISCLAIMER
The use of this standard is governed by the "Texas Engineering Practice Act". No warranty of any kind is made by TxDOT for any purpose whatsoever. TxDOT assumes no responsibility for the conversion of this standard to other formats or for incorrect results or damages resulting from its use.

PORTABLE CHANGEABLE MESSAGE SIGNS

1. The Engineer/Inspector shall approve all messages used on portable changeable message signs (PCMS).
2. Messages on PCMS should contain no more than 8 words (about four to eight characters per word), not including simple words such as "TO," "FOR," "AT," etc.
3. Messages should consist of a single phase, or two phases that alternate. Three-phase messages are not allowed. Each phase of the message should convey a single thought, and must be understood by itself.
4. Use the word "EXIT" to refer to an exit ramp on a freeway; i.e., "EXIT CLOSED." Do not use the term "RAMP."
5. Always use the route or interstate designation (IH, US, SH, FM) along with the number when referring to a roadway.
6. When in use the bottom of a stationary PCMS message panel should be a minimum 7 feet above the roadway, where possible.
7. The message term "WEEKEND" should be used only if the work is to start on Saturday morning and end by Sunday evening at midnight. Actual days and hours of work should be displayed on the PCMS if work is to begin on Friday evening and/or continue into Monday morning.
8. The Engineer/Inspector may select one of two options which are available for displaying a two-phase message on a PCMS. Each phase may be displayed for either four seconds each or for three seconds each.
9. Do not "flash" messages or words included in a message. The message should be steady burn or continuous while displayed.
10. Do not present redundant information on a two-phase message; i.e., keeping two lines of the message the same and changing the third line.
11. Do not use the word "Danger" in message.
12. Do not display the message "LANES SHIFT LEFT" or "LANES SHIFT RIGHT" on a PCMS. Drivers do not understand the message.
13. Do not display messages that scroll horizontally or vertically across the face of the sign.
14. The following table lists abbreviated words and two-word phrases that are acceptable for use on a PCMS. Both words in a phrase must be displayed together. Words or phrases not on this list should not be abbreviated.
15. PCMS character height should be at least 18 inches for trailer mounted units. They should be visible from at least 1/2 (.5) mile and the text should be legible from at least 720 feet. Truck mounted units must have a character height of 10 inches and must be legible from at least 400 feet.
16. Each line of text should be centered on the message board rather than left or right justified.
17. If disabled, the PCMS should default to an illegible display that will not alarm motorists and will only be used to alert workers that the PCMS has malfunctioned. A pattern such as a series of horizontal solid bars is appropriate.

Word or Phrase	Abb.	Word or Phrase	Abb.
Access Road	ACCS RD	Major	MAJ
Air Quality	AIR QLTY	Miles	MI
Alternate	ALT	Miles Per Hour	MPH
Avenue	AVE	Minor	MNR
Best Route	BEST RTE	Monday	MON
Boulevard	BLVD	Normal	NORM
Bridge	BRDG	North	N
Cannot	CANT	Northbound	(route) N
Center	CNTR	Parking	PKING
Construction Ahead	CONST AHEAD	Parking Lot	PRK LOT
Detour Route	DETOUR RTE	Road	RD
Do Not	DONT	Right Lane	RGT LN
East	E	Saturday	SAT
Eastbound	(route) E	Service Road	SERV RD
Emergency	EMER	Shoulder	SHLDR
Emergency Vehicle	EMER VEH	Slippery	SLIP
Entrance, Enter	ENT	South	S
Express Lanes	EXP LANE	Southbound	(route) S
Expressway	EXPWY	Speed	SPD
XXXX Feet	XXXX FT	Street	ST
Fog Ahead	FOG AHD	Sunday	SUN
Freeway	FRWY, FWY	Telephone	PHONE
Freeway Blocked	FWY BLKD	Temporary	TEMP
Friday	FRI	Thursday	THURS
Hazardous Driving	HAZ DRIVING	To Downtown	TO DWNTN
Hazardous Material	HAZMAT	Traffic	TRAF
High-Occupancy Vehicle	HOV	Travelers	TRVLRS
Highway	HWY	Tuesday	TUES
Hours	HR	Time Minutes	TIME MIN
Information	INFO	Upper Level	UPPR LVL
It Is	ITS	Vehicle	VEH
Junction	JCT	Warning	WARN
Left	LFT	Wednesday	WED
Left Lane	LFT LN	Weight Limit	WT LIMIT
Lane Closed	LN CLSD	West	W
Lower Level	LOWR LVL	Westbound	(route) W
Maintenance	MAINT	Wet Pavement	WET PVMT
		Will Not	WONT

Roadway
designation # IH-number, US-number, SH-number, FM-number

WHEN NOT IN USE, REMOVE THE PCMS FROM THE RIGHT-OF-WAY OR PLACE THE PCMS BEHIND BARRIER OR GUARDRAIL WITH SIGN PANEL TURNED PARALLEL TO TRAFFIC

Phase 1: Condition Lists

Road/Lane/Ramp Closure List

FREEWAY CLOSED X MILE	FRONTAGE ROAD CLOSED
ROAD CLOSED AT SH XXX	SHOULDER CLOSED XXX FT
ROAD CLSD AT FM XXXX	RIGHT LN CLOSED XXX FT
RIGHT X LANES CLOSED	RIGHT X LANES OPEN
CENTER LANE CLOSED	DAYTIME LANE CLOSURES
NIGHT LANE CLOSURES	I-XX SOUTH EXIT CLOSED
VARIOUS LANES CLOSED	EXIT XXX CLOSED X MILE
EXIT CLOSED	RIGHT LN TO BE CLOSED
MALL DRIVEWAY CLOSED	X LANES CLOSED TUE - FRI
XXXXXXXX BLVD CLOSED	

Other Condition List

ROADWORK XXX FT	ROAD REPAIRS XXXX FT
FLAGGER XXXX FT	LANE NARROWS XXXX FT
RIGHT LN NARROWS XXXX FT	TWO-WAY TRAFFIC XX MILE
MERGING TRAFFIC XXXX FT	CONST TRAFFIC XXX FT
LOOSE GRAVEL XXXX FT	UNEVEN LANES XXXX FT
DETOUR X MILE	ROUGH ROAD XXXX FT
ROADWORK PAST SH XXXX	ROADWORK NEXT FRI-SUN
BUMP XXXX FT	US XXX EXIT X MILES
TRAFFIC SIGNAL XXXX FT	LANES SHIFT *

* LANES SHIFT in Phase 1 must be used with STAY IN LANE in Phase 2.

Phase 2: Possible Component Lists

Action to Take/Effect on Travel List

MERGE RIGHT	FORM X LINES RIGHT
DETOUR NEXT X EXITS	USE XXXXX RD EXIT
USE EXIT XXX	USE EXIT I-XX NORTH
STAY ON US XXX SOUTH	USE I-XX E TO I-XX N
TRUCKS USE US XXX N	WATCH FOR TRUCKS
WATCH FOR TRUCKS	EXPECT DELAYS
EXPECT DELAYS	PREPARE TO STOP
REDUCE SPEED XXX FT	END SHOULDER USE
USE OTHER ROUTES	WATCH FOR WORKERS
STAY IN LANE *	

Location List / Warning List / ** Advance Notice List

Location List	Warning List	** Advance Notice List
AT FM XXXX	SPEED LIMIT XX MPH	TUE-FRI XX AM- X PM
BEFORE RAILROAD CROSSING	MAXIMUM SPEED XX MPH	APR XX- XX X PM-X AM
NEXT X MILES	MINIMUM SPEED XX MPH	BEGINS MONDAY
PAST US XXX EXIT	ADVISORY SPEED XX MPH	BEGINS MAY XX
XXXXXXX TO XXXXXXX	RIGHT LANE EXIT	MAY X-X XX PM - XX AM
US XXX TO FM XXXX	USE CAUTION	NEXT FRI-SUN
	DRIVE SAFELY	XX AM TO XX PM
	DRIVE WITH CARE	NEXT TUE AUG XX
		TONIGHT XX PM- XX AM

** See Application Guidelines Note 6.

Application Guidelines

1. Only 1 or 2 phases are to be used on a PCMS.
2. The 1st phase (or both) should be selected from the "Road/Lane/Ramp Closure List" and the "Other Condition List".
3. A 2nd phase can be selected from the "Action to Take/Effect on Travel, Location, General Warning, or Advance Notice Phase Lists".
4. A Location Phase is necessary only if a distance or location is not included in the first phase selected.
5. If two PCMS are used in sequence, they must be separated by a minimum of 1000 ft. Each PCMS shall be limted to two phases, and should be understandable by themselves.
6. For advance notice, when the current date is within seven days of the actual work date, calendar days should be replaced with days of the week. Advance notification should typically be for no more than one week prior to the work

Wording Alternatives

1. The words RIGHT, LEFT and ALL can be interchanged as appropriate.
2. Roadway designations IH, US, SH, FM and LP can be interchanged as appropriate.
3. EAST, WEST, NORTH and SOUTH (or abbreviations E, W, N and S) can be interchanged as appropriate.
4. Highway names and numbers replaced as appropriate.
5. ROAD, HIGHWAY and FREEWAY can be interchanged as needed.
6. AHEAD may be used instead of distances if necessary.
7. FT and MI, MILE and MILES interchanged as appropriate.
8. AT, BEFORE and PAST interchanged as needed.
9. Distances or AHEAD can be eliminated from the message if a location phase is used.

PCMS SIGNS WITHIN THE R.O.W. SHALL BE BEHIND GUARDRAIL OR CONCRETE BARRIER OR SHALL HAVE A MINIMUM OF FOUR (4) PLASTIC DRUMS PLACED PERPENDICULAR TO TRAFFIC ON THE UPSTREAM SIDE OF THE PCMS.

FULL MATRIX PCMS SIGNS

1. When Full Matrix PCMS signs are used, the character height and legibility/visibility requirements shall be maintained as listed in Note 15 under "PORTABLE CHANGEABLE MESSAGE SIGNS" above.
2. When symbol signs, such as the CW20-7a Flagger Symbol, are represented graphically on the Full Matrix PCMS sign and, with the approval of the Engineer, it shall maintain the legibility/visibility requirement listed above.
3. When symbol signs are represented graphically on the Full Matrix PCMS, they shall only supplement the use of the static sign represented, and shall not substitute for, or replace that sign.
4. A full matrix PCMS may be used to simulate a flashing arrow panel provided it meets the visibility, flash rate and dimming requirements on BC(7), for the same size arrow.

LEVELS DISPLAYED

1	2	3	4	5	6	7	8	9	10	11	12	13	14	15	16
17	18	19	20	21	22	23	24	25	26	27	28	29	30	31	32
33	34	35	36	37	38	39	40	41	42	43	44	45	46	47	48
49	50	51	52	53	54	55	56	57	58	59	60	61	62	63	

ACC:

S&B INFRASTRUCTURE, LTD.
Engineering Management Technology
S&B Infrastructure, Ltd. Firm Registration Number: 1582

STATE OF TEXAS
PHILLIP J. PAWELEK
82739
REGISTERED PROFESSIONAL ENGINEER

The seal appearing on this document was authorized by PHILLIP J. PAWELEK P.E. 82739, on 6-11, 2009.

Phillip J. Pawelek, P.E.

BARRICADE AND CONSTRUCTION PORTABLE CHANGEABLE MESSAGE SIGN (PCMS) STANDARD

SHEET 6 OF 12 SHEET

STATE	COUNTY	DRAWN BY: MK	CHECKED BY: --	SHEET NO.
TEXAS	HIDALGO	PROJECT NO. IBM09T0018		
REHABILITATION OF NORTH FLOODWAY NORTH AND SOUTH LEVEES (FM 1015 TO BASELINE RD)				15.08

n:\project\u0450\u045051S\800*workingfiles\dgn\045051SBC*STDS.dgn

BARRIER REFLECTORS FOR CONCRETE TRAFFIC BARRIER AND ATTENUATORS

1. Barrier Reflectors shall be prequalified, and conform to the color and reflectivity requirements of DMS-8600. A list of prequalified Barrier Reflectors (Type C Delineators) can be found at the Material Producer List web address shown on BC(1).
2. Color of Barrier Reflectors shall be as specified in the TMUTCD. The cost of the reflectors shall be considered subsidiary to Item 502.

CONCRETE TRAFFIC BARRIER (CTB)

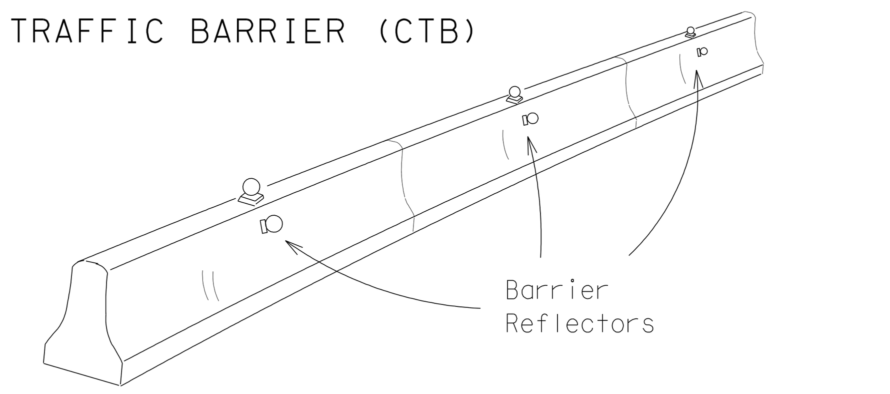

3. Where traffic is on one side of the CTB, two (2) Barrier Reflectors shall be mounted in approximately the midsection of each section of CTB. An alternate mounting location is uniformly spaced at one end of each CTB. This will allow for attachment of a barrier grapple without damaging the reflector. The Barrier Reflector mounted on the side of the CTB shall be located directly below the reflector mounted on top of the barrier, as shown in the detail above.
4. Where CTB separates two-way traffic, three barrier reflectors shall be mounted on each section of CTB. The reflector unit on top shall have two yellow reflective faces (Bi-Directional)while the reflectors on each side of the barrier shall have one yellow reflective face, as shown in the detail above.
5. When CTB separates traffic traveling in the same direction, no barrier reflectors will be required on top of the CTB.
6. Barrier Reflector units shall be yellow or white in color to match the edgeline being supplemented. Yellow Barrier Reflectors shall be made with Type E Fluorescent Prismatic Yellow Retroreflective Sheeting. White reflectors shall be made with Type D White Prismatic sheeting.
7. Maximum spacing of Barrier Reflectors is forty (40) feet.
8. Pavement markers or temporary flexible-reflective roadway marker tabs shall NOT be used as CTB delineation.
9. Attachment of Barrier Reflectors to CTB shall be per manufacturer's recommendations.
10. Missing or damaged Barrier Reflectors shall be replaced as directed by the Engineer.
11. Single slope barriers shall be delineated as shown on the above detail.

LOW PROFILE CONCRETE BARRIER (LPCB)

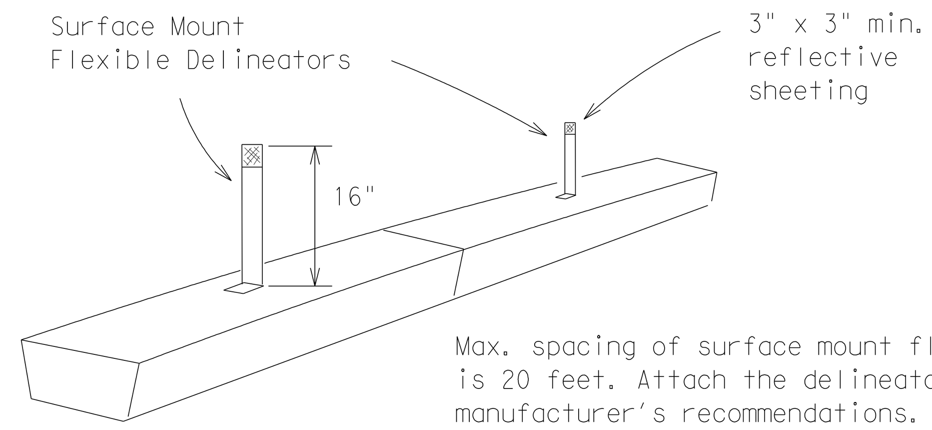

Max. spacing of surface mount flexible delineators is 20 feet. Attach the delineators as per manufacturer's recommendations.

DELINEATION OF END TREATMENTS

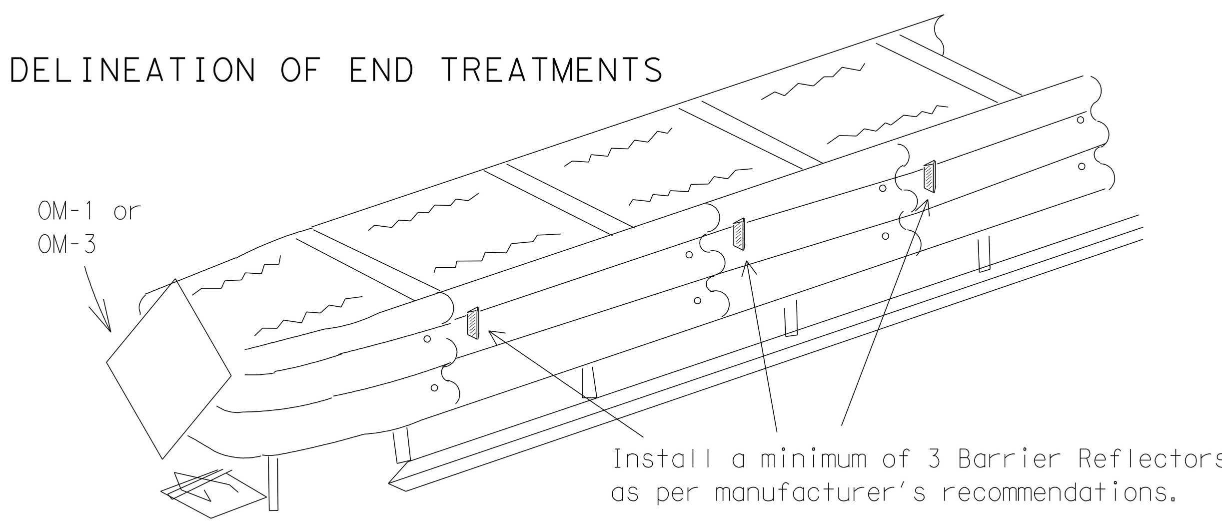

	APPROACHING TRAFFIC	
	BOTH SIDES	ONE SIDE
DELINEATION	OM-1	OM-3 or Vertical Panel

END TREATMENTS FOR CTB'S USED IN WORK ZONES

End treatments used on CTB's in work zones shall meet crashworthy standards as defined in the National Cooperative Highway Research Report 350. Refer to the CWZTCD List for approved end treatments and manufacturers.

TYPICAL FLASHING ARROW PANEL

Arrow Panels may be located behind channelizing devices in place for a shoulder taper or merging taper, otherwise they shall be delineated with four (4) channelizing devices placed perpendicular to traffic on the upstream side of traffic.

1. The Flashing Arrow Panel should be used for all lane closures on multi-lane roadways, or slow moving maintenance or construction activities on the travel lanes.
2. Flashing Arrow Panels should not be used on two-lane, two-way roadways, detours, diversions or work on shoulders unless the "CAUTION" display (see detail below) is used.
3. The Engineer/Inspector shall choose all appropriate signs, barricades and/or other traffic control devices that should be used in conjunction with the Flashing Arrow Panel.
4. The Flashing Arrow Panel should be able to display the following symbols:

Flashing RIGHT (LEFT) ARROW

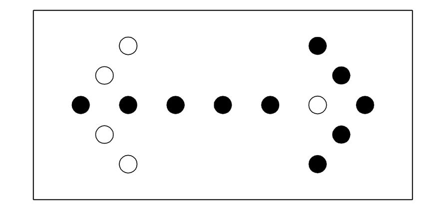

Flashing DOUBLE ARROW

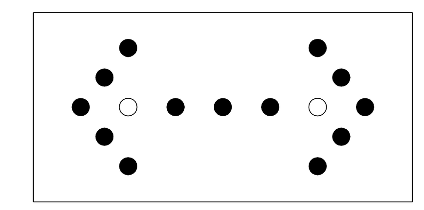

Flashing CAUTION

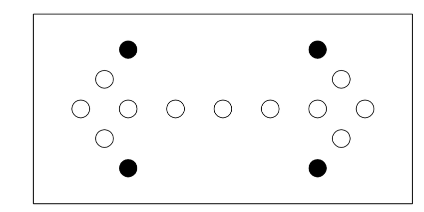

5. The "CAUTION" display consists of four corner lamps flashing simultaneously.
6. The straight line caution display is NOT ALLOWED.
7. The Flashing Arrow Panel shall be capable of minimum 50 percent dimming from rated lamp voltage. The flashing rate of the lamps shall not be less than 25 nor more than 40 flashes per minute.
8. Minimum lamp "on time" shall be approximately 50 percent for the flashing arrow and equal intervals of 25 percent for each sequential phase of the flashing chevron.
9. The sequential arrow display is NOT ALLOWED.
10. The flashing arrow display is the TxDOT standard; however, the sequential Chevron display may be used during daylight operations.

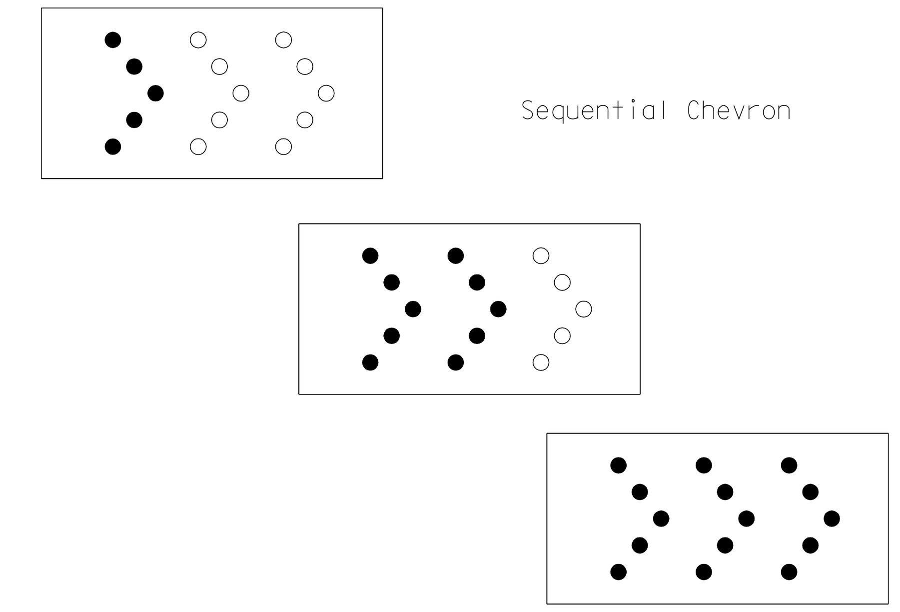

Sequential Chevron

REQUIREMENTS

TYPE	MINIMUM SIZE	MINIMUM NUMBER OF PANEL LAMPS	MINIMUM VISIBILITY DISTANCE
B	30 x 60	13	3/4 mile
C	48 x 96	15	1 mile

ATTENTION: Flashing Arrow Panels shall be equipped with automatic dimming devices.

WHEN NOT IN USE, REMOVE THE ARROW PANEL FROM THE RIGHT-OF-WAY OR PLACE THE ARROW PANEL BEHIND CONCRETE TRAFFIC BARRIER OR GUARDRAIL.

11. The Flashing Arrow Panel shall be mounted on a vehicle, trailer or other suitable support.
12. A Flashing Arrow Panel SHALL NOT BE USED to laterally shift traffic.
13. A full matrix PCMS may be used to simulate a Flashing Arrow Panel provided it meets visibility, flash rate and dimming requirements on this sheet for the same size arrow.
14. Minimum mounting height of trailer mounted arrow panels should be 7 feet from roadway to bottom of panel.

DISCLAIMER
The use of this standard is governed by the "Texas Engineering Practice Act". No warranty of any kind is made by TxDOT for any purpose whatsoever. TxDOT assumes no responsibility for the conversion of this standard to other formats or for incorrect results or damages resulting from its use.

WARNING LIGHTS

1. Warning lights shall meet the requirements of the TMUTCD.
2. Warning lights shall NOT be installed on barricades.
3. Type A-Low Intensity Flashing Warning Lights are commonly used with drums. They are intended to warn of or mark a potentially hazardous area. Their use shall be as indicated on this sheet and/or other sheets of the plans by the designation "FL". The Type A Warning Lights shall not be used with signs manufactured with Type E Sheeting (Fluorescent Prismatic) meeting the requirements of Departmental Material Specification DMS-8300.
4. Type-C and Type D 360 degree Steady Burn Lights are intended to be used in a series for delineation to supplement other traffic control devices. Their use shall be as indicated on this sheet and/or other sheets of the plans by the designation "SB".
5. The Engineer/Inspector or the plans shall specify the location and type of warning lights to be installed on the traffic control devices.
6. When required by the Engineer, the Contractor shall furnish a copy of the warning lights certification. The warning light manufacturer will certify the warning lights meet the requirements of the latest ITE Purchase Specifications for Flashing and Steady-Burn Warning Lights.
7. When used to delineate curves, Type-C and Type D Steady Burn Lights should only be placed on the outside of the curve, not the inside.

WARNING LIGHTS MOUNTED ON PLASTIC DRUMS

1. Type A flashing warning lights are intended to warn drivers that they are approaching or are in a potentially hazardous area.
2. Type A random flashing warning lights are not intended for delineation and shall not be used in a series.
3. A series of sequential flashing warning lights placed on channelizing devices to form a merging taper may be used for delineation. If used, the successive flashing of the sequential warning lights should occur from the beginning of the taper to the end of the merging taper in order to identify the desired vehicle path. The rate of flashing for each light shall be 65 flashes per minute, plus or minus 10 flashes.
4. Type C and D steady-burn warning lights are intended to be used in a series to delineate the edge of the travel lane on detours, on lane changes, on lane closures, and on other similar conditions.
5. Type A, Type C and Type D warning lights shall be installed at locations as detailed on other sheets in the plans.
6. Warning lights shall not be installed on a drum that has a sign, chevron or vertical panel.
7. The maximum spacing for warning lights on drums should be identical to the channelizing device spacing.

WARNING REFLECTORS MOUNTED ON PLASTIC DRUMS AS A SUBSTITUTE FOR TYPE C (STEADY BURN) WARNING LIGHTS

1. A warning reflector or approved substitute may be mounted on a plastic drum as a substitute for a Type C, steady burn warning light at the discretion of the Contractor unless otherwise noted in the plans.
2. The warning reflector shall be yellow in color and shall be manufactured using a sign substrate approved for use with plastic drums listed on the CWZTCD.
3. The warning reflector shall have a minimum retroreflective surface area (one-side) of 30 square inches.
4. Round reflectors shall be fully reflectorized, including the area where attached to the drum.
5. Square substrates must have a minimum of 30 square inches of reflectorized sheeting. They do not have to be reflectorized where it attaches to the drum.
6. The side of the warning reflector facing approaching traffic shall have sheeting meeting the color and retroreflectivity requirements for DMS 8300-Type D (Non-fluorescent Prismatic).
7. When used near two-way traffic, both sides of the warning reflector shall be reflectorized.
8. The warning reflector should be mounted on the side of the handle nearest approaching traffic.
9. The maximum spacing for warning reflectors should be identical to the channelizing device spacing requirements.

TRUCK-MOUNTED ATTENUATORS

1. Truck-mounted attenuators (TMA) used on TxDOT facilities must meet the requirements outlined in the National Cooperative Highway Research Report No. 350 (NCHRP 350).
2. Refer to the CWZTCD for the requirements of Level 2 or Level 3 TMAs.
3. Refer to the dates shown in the CWZTCD to ensure that the TMA meets the age requirements and the crashworthiness criteria established by the Federal Highway Administration (FHWA) for TMAs.
4. Refer to the CWZTCD for a list of approved TMAs.
5. TMAs are required on freeways unless otherwise noted in the plans.
6. A TMA should be used anytime that it can be positioned approximately 30 to 100 feet in advance of the area of crew exposure without adversely affecting the work performance.
7. The only reason a TMA should not be required is when a work area is spread down the roadway and the work crew is an extended distance from the TMA.

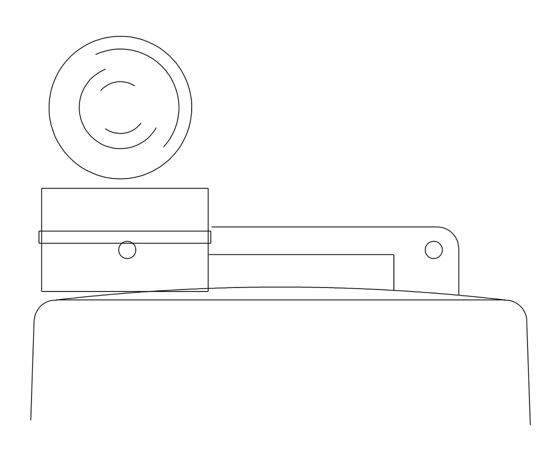

Type C Warning Light or approved substitute mounted adjacent to the travel way.

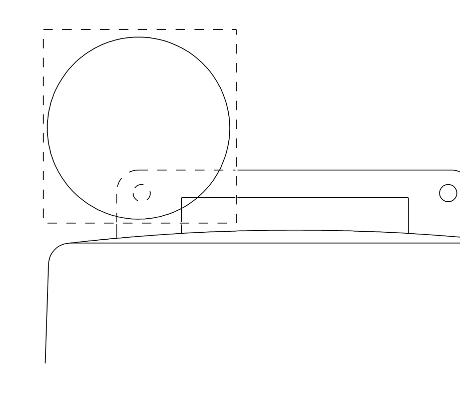

Warning reflector may be round or square. Must have a reflective surface area of at least 30 square inches

S&B INFRASTRUCTURE, LTD.
Engineering Management Technology

S&B Infrastructure, Ltd. Firm Registration Number: 1582

STATE OF TEXAS
PHILLIP J. PAWELEK
82739
REGISTERED PROFESSIONAL ENGINEER

The seal appearing on this document was authorized by PHILLIP J. PAWELEK P.E. 82739, on 6-11, 2009.

Phillip J. Pawelek, P.E.

BARRICADE AND CONSTRUCTION ARROW PANEL, REFLECTORS, WARNING LIGHTS & ATTENUATOR STANDARD

SHEET 7 OF 12 SHEET

STATE	COUNTY	DRAWN BY: MK	CHECKED BY: --	SHEET NO.
TEXAS	HIDALGO	PROJECT NO. IBM09T0018		
REHABILITATION OF NORTH FLOODWAY NORTH AND SOUTH LEVEES (FM 1015 TO BASELINE RD)				15.09

ACC:

LEVELS DISPLAYED

1	2	3	4	5	6	7	8	9	10	11	12	13	14	15	16
17	18	19	20	21	22	23	24	25	26	27	28	29	30	31	32
33	34	35	36	37	38	39	40	41	42	43	44	45	46	47	48
49	50	51	52	53	54	55	56	57	58	59	60	61	62	63	

n:\project\u0450\u0450515\800*workingfiles\dgn\0450515BC*STDS.dgn

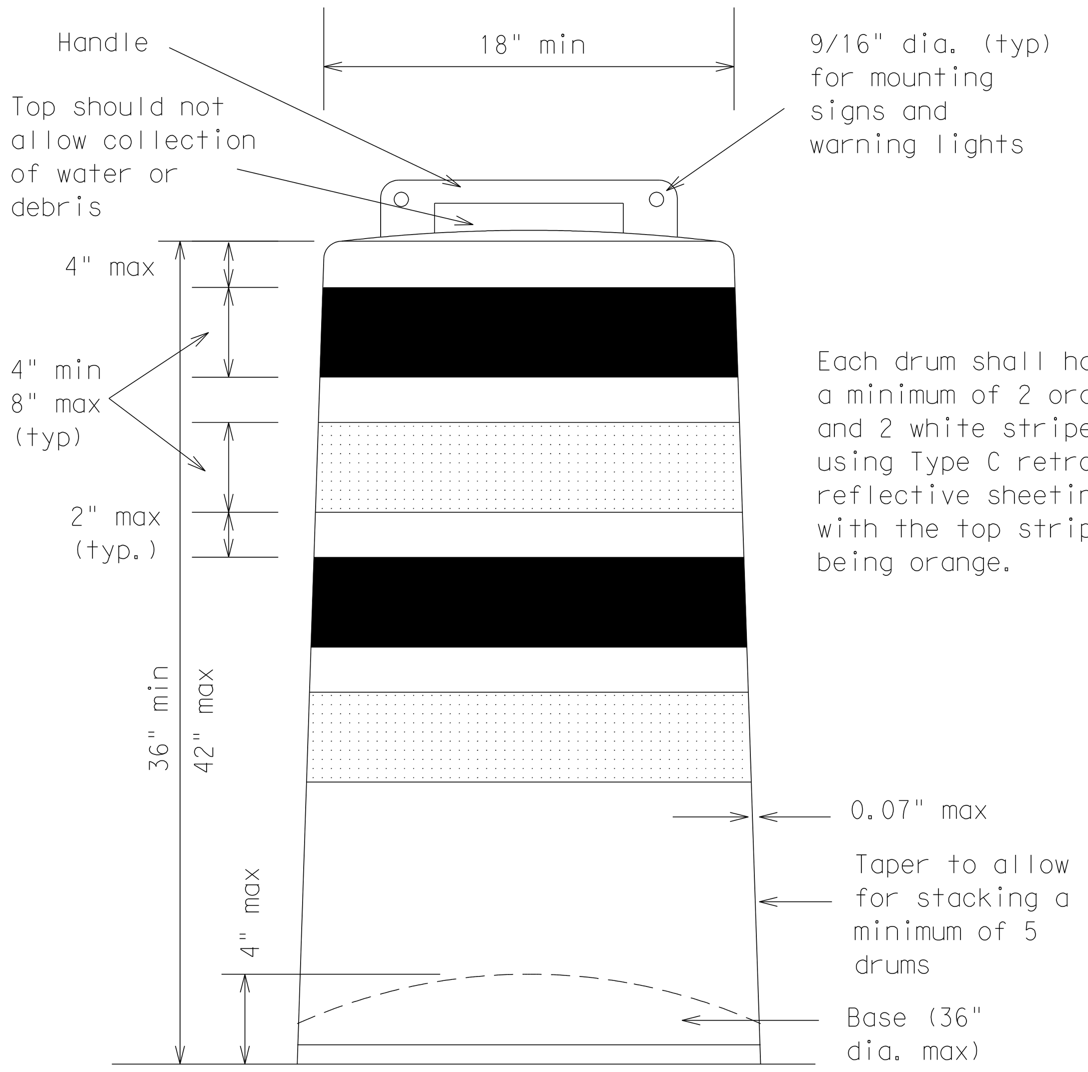

GENERAL NOTES

1. For long term stationary work zones on freeways, drums shall be used as the primary channelizing device.
2. For intermediate term stationary work zones on freeways, drums should be used as the primary channelizing device but may be replaced in tangent sections by vertical panels, or 42" two-piece cones. In tangent sections one-piece cones may be used with the approval of the Engineer but only if personnel are present on the project at all times to maintain the cones in proper position and location.
3. For short term stationary work zones on freeways, drums are the preferred channelizing device but may be replaced in tapers, transitions and tangent sections by vertical panels, two-piece cones ar one-piece cones as approved by the Engineer.
4. Drums and all related items shall comply with the requirements of the current version of the "Texas Manual on Uniform Traffic Control Devices" (TMUTCD) and the "Compliant Work Zone Traffic Control Devices List" (CWZTCD).
5. Drums, bases, and related materials shall exhibit good workmanship and shall be free from objectionable marks or defects that would adversely affect their appearance or serviceability.
6. The Contractor shall have a maximum of 24 hours to replace any plastic drums identified for replacement by the Engineer/Inspector. The replacement device must be an approved device.

GENERAL DESIGN REQUIREMENTS

Prequalified plastic drums shall meet the following requirements:

1. Plastic drums shall be a two-piece design; the "body" of the drum shall be the top portion and the "base" shall be the bottom.
2. The body and base shall lock together in such a manner that the body separates from the base when impacted by a vehicle traveling at a speed of 20 MPH or greater but prevents accidental separation due to normal handling and/or air turbulence created by passing vehicles.
3. Plastic drums shall be constructed of lightweight flexible, and deformable materials. The Contractor shall NOT use metal drums or single piece plastic drums as channelization devices or sign supports.
4. Drums shall present a profile that is a minimum of 18 inches in width at the 36 inch height when viewed from any direction. The height of drum unit (body installed on base) shall be a minimum of 36 inches and a maximum of 42 inches.
5. The top of the drum shall have a built-in handle for easy pickup and shall be designed to drain water and not collect debris. The handle shall have a minimum of two widely spaced 9/16 inch diameter holes to allow attachment of a warning light, warning reflector unit or approved compliant sign.
6. The exterior of the drum body shall have a minimum of four alternating orange and white retroreflective circumferential stripes not less than 4 inches nor greater than 8 inches in width. Any non-reflectorized space between any two adjacent stripes shall not exceed 2 inches in width.
7. Bases shall have a maximum width of 36 inches, a maximum height of 4 inches, and a minimum of two footholds of sufficient size to allow base to be held down while separating the drum body from the base.
8. Plastic drums shall be constructed of ultra-violet stabilized, orange, high-density polyethylene (HDPE) or other approved material.
9. Drum body shall have a minimum unballasted weight of 7.7 lbs. and maximum unballasted weight of 11 lbs. The wall of the drum body shall be a minimum of 0.07 inch in thickness. Weight of any drum supplied shall not vary more than 0.5 lb. from that of the prequalified sample.
10. Drum and base shall be marked with manufacturer's name and model number.

RETROREFLECTIVE SHEETING

1. The stripes used on drums shall be constructed of sheeting meeting the color and retroreflectivity requirements of Departmental Materials Specification DMS-8300, "Flat Surface Reflective Sheeting." High Specific Intensity (Type C) retroreflective sheeting shall be supplied unless otherwise specified in the plans.
2. The sheeting shall be suitable for use on and shall adhere to the drum surface such that, upon vehicular impact, the sheeting shall remain adhered in-place and exhibit no delaminating, cracking, or loss of retroreflectivity other than that loss due to abrasion of the sheeting surface.

BALLAST

1. Unballasted bases shall be large enough to hold up to 50 lbs. of sand. This base, when filled with the ballast material, should weigh between 35 lbs (minimum) and 50 lbs (maximum). The ballast may be sand in one to three sandbags separate from the base, sand in a sand-filled plastic base, or other ballasting devices as approved by the Engineer. Stacking of sandbags will be allowed, however height of sandbags above pavement surface may not exceed 12 inches.
2. Bases with built-in ballast shall weigh between 40 lbs. and 50 lbs. Built-in ballast can be constructed of an integral crumb rubber base or a solid rubber base.
3. The ballast shall not be heavy objects, water, or any material that would become hazardous to motorists, pedestrians, or workers when the drum is struck by a vehicle.
4. When used in regions susceptible to freezing, drums shall have drainage holes in the bottoms so that water will not collect and freeze becoming a hazard when struck by a vehicle.
5. Ballast shall not be placed on top of drums.
6. Adhesives may be used to secure base of drums to pavement.

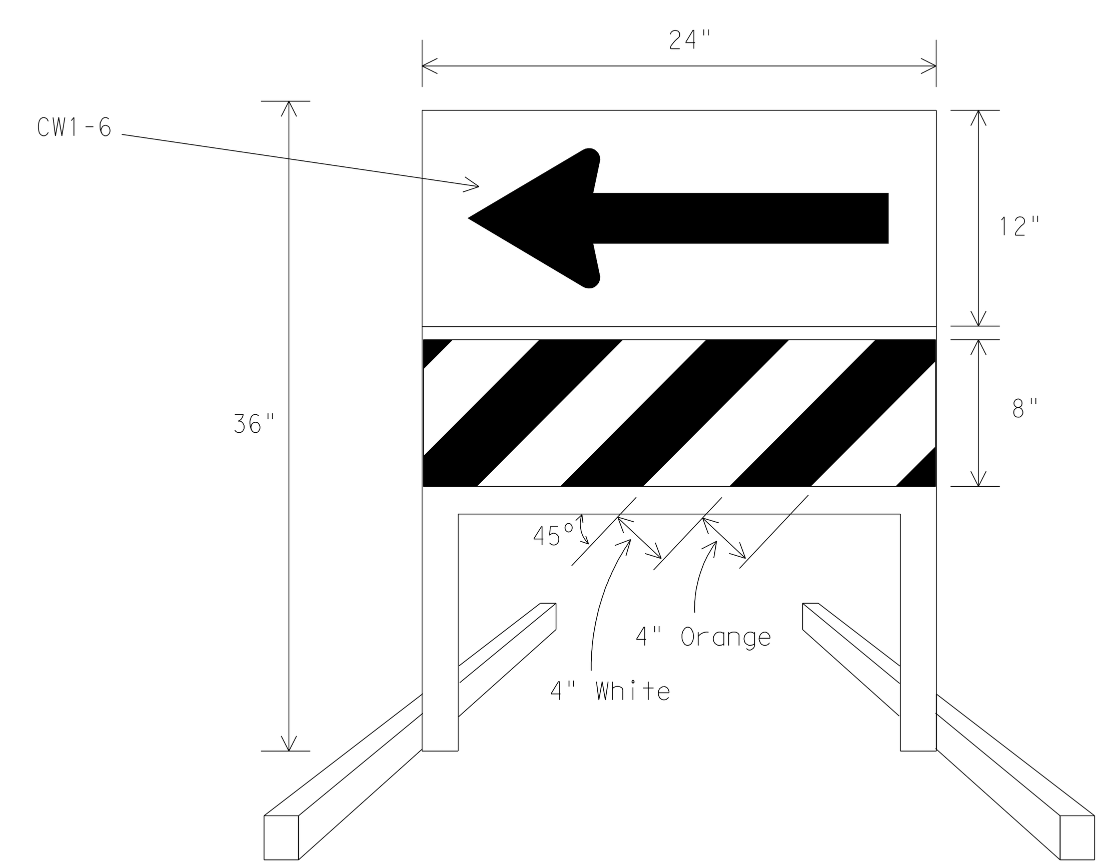

DIRECTION INDICATOR BARRICADE

1. The Direction Indicator Barricade may be used in tapers, transitions, and other areas where specific directional guidance to drivers is necessary.
2. If used, the Direction Indicator Barricade should be used in series to direct the driver through the transition and into the intended travel lane.
3. The Direction Indicator Barricade shall consist of One-Direction Large Arrow (CW1-6) sign in the size shown with a black arrow on a background of Type E Fluoprescent Prismatic Orange above a rail with Type C High Specific Intensity retroreflective sheeting in alternation 4" white and orange stripes sloping downward at an angle of 45 degrees in the direction road users are to pass.
4. Double arrows on the Direction Indicator Barricade will not be allowed.
5. Approved manufacturers are shown on the CWZTCD List. Ballast shall be as approved by the manufacturers instructions.

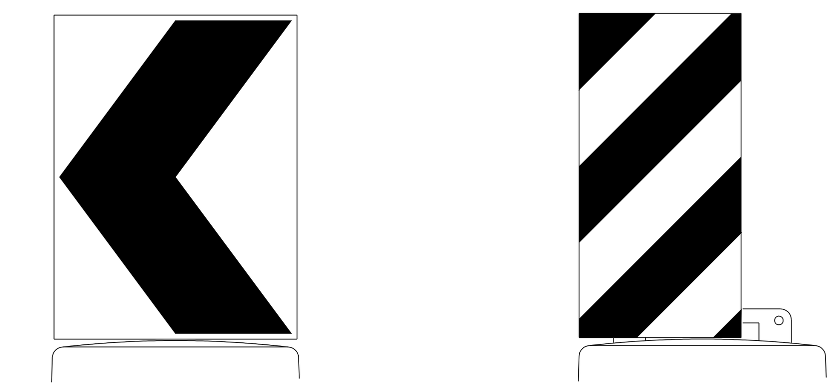

18" x 24" Sign
(Maximum Sign Dimension)
Chevron CW1-8, Opposing Traffic Lane Divider, Driveway sign D70a, Keep Right R4 series or other signs as approved by Engineer

12" x 24"
Vertical Panel
mount with diagonals sloping down towards travel way

Plywood, Aluminum or Metal sign substrates shall NOT be used on plastic drums

SIGNS, CHEVRONS, AND VERTICAL PANELS MOUNTED ON PLASTIC DRUMS

1. Signs used on plastic drums shall be manufactured using substrates listed on the CWZTCD.
2. Chevrons and other work zone signs with an orange background shall be manufactured with Type E (Fluorescent Prismatic) sheeting meeting the color and retroreflectivity requirements of DMS-8300, "Sign Face Material," unless otherwise specified in the plans.
3. Vertical Panels shall be manufactured with orange and white sheeting meeting the requirements of DMS-8300 Type C (High Specific Intensity). Diagonal stripes on Vertical Panels shall slope down toward the intended traveled lane.
4. Other sign messages (text or symbolic) may be used as approved by the Engineer. Sign dimensions shall not exceed 18 inches in width or 24 inches in height.
5. Signs shall be installed using a 1/2 inch bolt (nominal) and nut, two washers, and one locking washer for each connection.
6. Mounting bolts and nuts shall be fully engaged and adequately torqued. Bolts should not extend more than 1/2 inch beyond nuts.
7. Chevrons may be placed on drums on the outside of curves, on merging tapers or on shifting tapers. When used in these locations they may be placed on every drum or spaced not more than on every third drum. A minimum of three (3) should be used at each location called for in the plans.
8. R9-9, R9-10, R9-11 and R9-11a Sidewalk Closed signs which are 24 inches wide may be mounted on plastic drums, with approval of the Engineer.

DISCLAIMER
The use of this standard is governed by the "Texas Engineering Practice Act". No warranty of any kind is made by TxDOT for any purpose whatsoever. TxDOT assumes no responsibility for the conversion of this standard to other formats or for incorrect results or damages resulting from its use.

LEVELS DISPLAYED

ACC:

1	2	3	4	5	6	7	8	9	10	11	12	13	14	15	16
17	18	19	20	21	22	23	24	25	26	27	28	29	30	31	32
33	34	35	36	37	38	39	40	41	42	43	44	45	46	47	48
49	50	51	52	53	54	55	56	57	58	59	60	61	62	63	

S&B INFRASTRUCTURE, LTD.
Engineering Management Technology
S&B Infrastructure, Ltd. Firm Registration Number: 1582

STATE OF TEXAS
PHILLIP J. PAWELEK
82739
REGISTERED PROFESSIONAL ENGINEER

The seal appearing on this document was authorized by PHILLIP J. PAWELEK P.E. 82739, on 6-11, 2009.

Phillip J. Pawelek, P.E.

BARRICADE AND CONSTRUCTION CHANNELIZING DEVICES STANDARD

SHEET 8 OF 12 SHEET

STATE	COUNTY	DRAWN BY: MK	CHECKED BY: --	
TEXAS	HIDALGO	PROJECT NO.	IBM09T0018	SHEET NO.
REHABILITATION OF NORTH FLOODWAY NORTH AND SOUTH LEVEES (FM 1015 TO BASELINE RD)				15.10

n:\project\u0450\u0450515\800*workingfiles\dgn\0450515BC*STDS.dgn

PAVEMENT MARKING PATTERNS

CENTER LINE & NO-PASSING ZONE BARRIER LINES FOR TWO-LANE, TWO-WAY HIGHWAYS

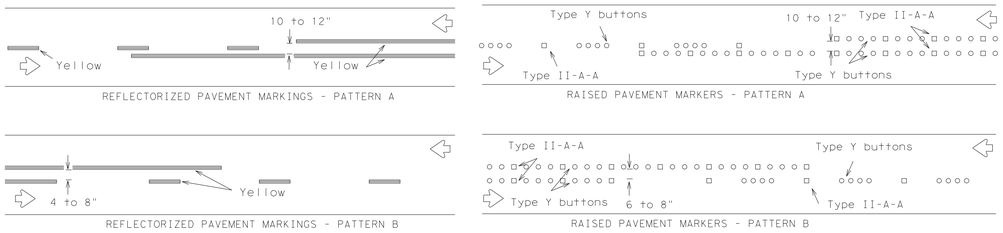

Pattern A is the TXDOT Standard, however Pattern B may be used if approved by the Engineer.
Prefabricated markings may be substituted for reflectorized pavement markings.

EDGE & LANE LINES FOR DIVIDED HIGHWAY

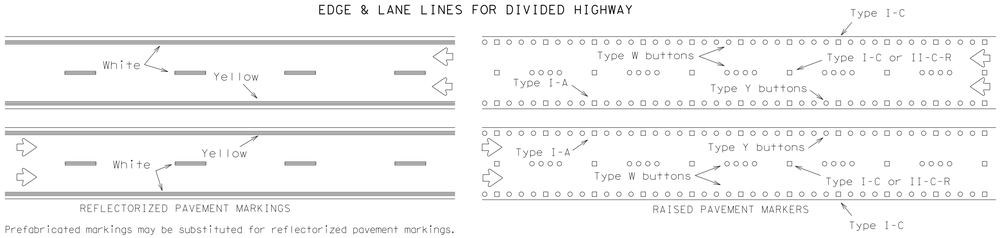

Prefabricated markings may be substituted for reflectorized pavement markings.

LANE & CENTER LINES FOR MULTILANE UNDIVIDED HIGHWAYS

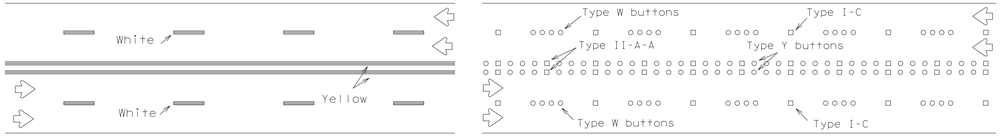

Prefabricated markings may be substituted for reflectorized pavement markings.

TWO-WAY LEFT TURN LANE

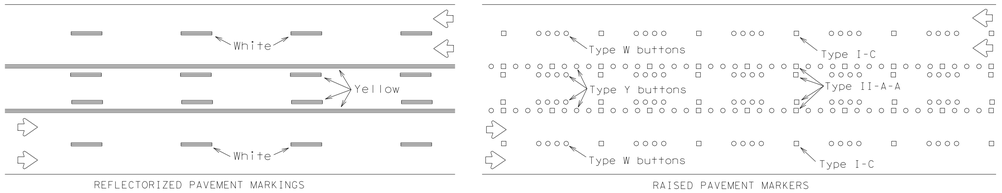

Prefabricated markings may be substituted for reflectorized pavement markings.

DISCLAIMER
The use of this standard is governed by the "Texas Engineering Practice Act". No warranty of any kind is made by TxDOT for any purpose whatsoever. TxDOT assumes no responsibility for the conversion of this standard to other formats or for incorrect results or damages resulting from its use.

LEVELS DISPLAYED

	1	2	3	4	5	6	7	8	9	0	1	2	3	4	5	6
ACC:	7	8	9	0	1	2	3	4	5	6	7	8	9	0	1	2
	17	18	19	20	21	22	23	24	25	26	27	28	29	30	31	32
	33	34	35	36	37	38	39	40	41	42	43	44	45	46	47	48
	49	50	51	52	53	54	55	56	57	58	59	60	61	62	63	

STANDARD WORK ZONE PAVEMENT MARKINGS DETAILS

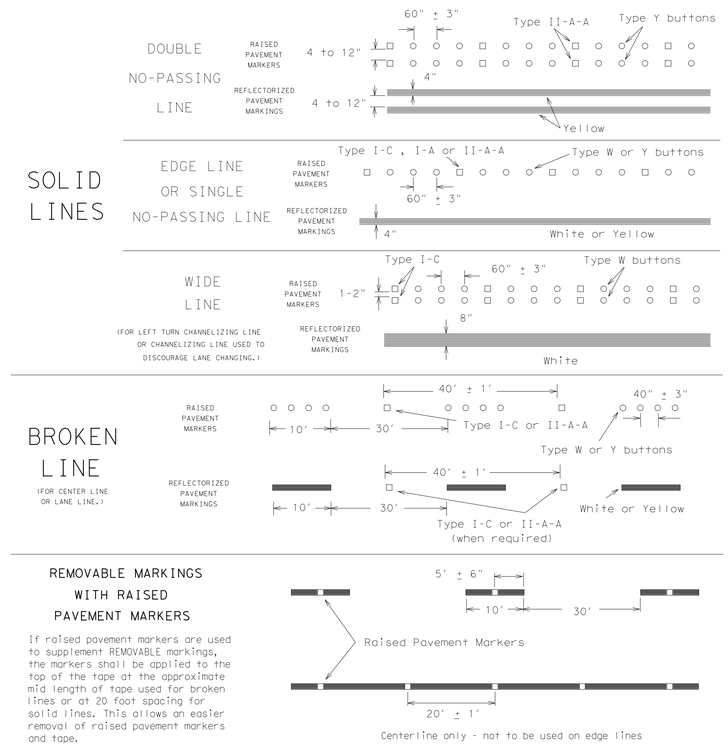

REMOVABLE MARKINGS WITH RAISED PAVEMENT MARKERS

If raised pavement markers are used to supplement REMOVABLE markings, the markers shall be applied to the top of the tape at the approximate mid length of tape used for broken lines or at 20 foot spacing for solid lines. This allows an easier removal of raised pavement markers and tape.

Centerline only - not to be used on edge lines

Raised pavement markers used as standard pavement markings shall be from the approved products list and meet the requirements of Item 672 "RAISED PAVEMENT MARKERS."

S&B INFRASTRUCTURE, LTD.
Engineering Management Technology
S&B Infrastructure, Ltd. Firm Registration Number: 1582

STATE OF TEXAS
PHILLIP J. PAWELEK
82739
REGISTERED PROFESSIONAL ENGINEER

The seal appearing on this document was authorized by PHILLIP J. PAWELEK P.E. 82739, on 6-11, 2009

Phillip J. Pawelek, P.E.

BARRICADE AND CONSTRUCTION CHANNELIZING DEVICES STANDARD

SHEET 9 OF 12 SHEET

STATE	COUNTY	DRAWN BY: MK	CHECKED BY: --	
TEXAS	HIDALGO	PROJECT NO. IBM09T0018		SHEET NO.
REHABILITATION OF NORTH FLOODWAY NORTH AND SOUTH LEVEES (FM 1015 TO BASELINE RD)				15.11

ms:\project\u0450\u045051\800\workingfiles\dgn\045051SBCSTDS.dgn

WORK ZONE PAVEMENT MARKINGS

GENERAL

1. The Contractor shall be responsible for maintaining work zone and existing pavement markings, in accordance with the standard specifications and special provisions, on all roadways open to traffic within the CSJ limits unless otherwise stated in the plans.
2. Color, patterns and dimensions shall be in conformance with the "Texas Manual on Uniform Traffic Control Devices" (TMUTCD).
3. Additional supplemental pavement marking details may be found in the plans or specifications.
4. Pavement markings shall be installed in accordance with the TMUTCD and as shown on the plans.
5. When short term markings are required on the plans, short term markings shall conform with the TMUTCD, the plans and details as shown on the Standard Plan Sheet WZ(STPM).
6. When standard pavement markings are not in place and the roadway is opened to traffic, DO NOT PASS signs shall be erected to mark the beginning of the sections where passing is prohibited and PASS WITH CARE signs at the beginning of sections where passing is permitted.
7. All work zone pavement markings shall be installed in accordance with Item 662, "Work Zone Pavement Markings."

RAISED PAVEMENT MARKERS

1. Raised pavement markers are to be placed according to the patterns on BC(12).
2. All raised pavement markers used for work zone markings shall meet the requirements of Item 672, "RAISED PAVEMENT MARKERS" and Departmental Material Specification DMS-4200 or DMS-4300.

PREFABRICATED PAVEMENT MARKINGS

1. Removable prefabricated pavement markings shall meet the requirements of DMS-8241.
2. Non-removable prefabricated pavement markings (foil back) shall meet the requirements of DMS-8240.

MAINTAINING WORK ZONE PAVEMENT MARKINGS

1. The Contractor will be responsible for maintaining work zone pavement markings within the work limits.
2. Work zone pavement markings shall be inspected in accordance with the frequency and reporting requirements of work zone traffic control device inspections as required by Form 599.
3. The markings should provide a visible reference for a minimum distance of 300 feet during normal daylight hours and 160 feet when illuminated by automobile low-beam headlights at night, unless sight distance is restricted by roadway geometrics.
4. Markings failing to meet this criteria within the first 30 days after placement shall be replaced at the expense of the Contractor as per Specification Item 662.

REMOVAL OF PAVEMENT MARKINGS

1. Pavement markings that are no longer applicable, could create confusion or direct a motorist toward or into the closed portion of the roadway, shall be removed or obliterated before the roadway is opened to traffic.
2. The above shall not apply to detours in place for less than two weeks, where flaggers and/or sufficient channelizing devices are used in lieu of markings to outline the detour route.
3. Pavement markings shall be removed to the fullest extent possible, so as not to leave a discernable marking. This shall be by any method approved by TxDOT Specification Item 677 for "Eliminating Existing Pavement Markings and Markers".
4. The removal of pavement markings may require resurfacing or seal coating portions of the roadway.
5. Subject to the approval of the Engineer, any method that proves to be successful on a particular type pavement may be used.
6. Blast cleaning may be used but will not be required unless specifically shown in the plans.
7. Over-painting of the markings SHALL NOT BE permitted.
8. Removal of raised pavement markers shall be as directed by the Engineer.
9. Removal of existing pavement markings and markers will be paid for directly in accordance with Item 677, "ELIMINATING EXISTING PAVEMENT MARKINGS AND MARKERS," unless otherwise stated in the plans.
10. Black-out marking tape may be used to cover conflicting existing markings for periods less than two weeks when approved by the Engineer.

DISCLAIMER
The use of this standard is governed by the "Texas Engineering Practice Act". No warranty of any kind is made by TxDOT for any purpose whatsoever. TxDOT assumes no responsibility for the conversion of this standard to other formats or for incorrect results or damages resulting from its use.

LEVELS DISPLAYED
1 2 3 4 5 6 7 8 9 0 1 1 2 1 3 4 1 5 1 6 ACC:
1 7 8 9 2 0 2 2 2 4 2 5 2 6 2 7 2 8 3 0 3 1 3 2
3 3 3 4 3 5 3 6 3 7 3 8 4 0 4 1 4 4 4 5 4 6 4 8
4 9 5 1 5 2 5 3 5 4 5 5 5 6 5 7 5 8 5 9 6 0 6 1 6 3 6 3

Temporary Flexible-Reflective Roadway Marker Tabs

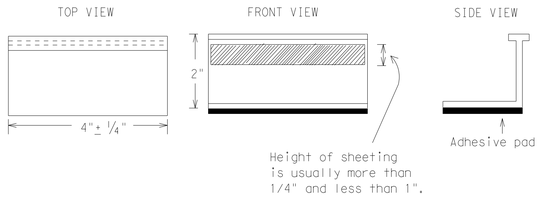

STAPLES OR NAILS SHALL NOT BE USED TO SECURE TEMPORARY FLEXIBLE-REFLECTIVE ROADWAY MARKER TABS TO THE PAVEMENT SURFACE

1. Temporary flexible-reflective roadway marker tabs used as guidemarks shall meet the requirements of DMS-8242.
2. Tabs detailed on this sheet are to be inspected and accepted by the Engineer or designated representative. Sampling and testing is not normally required, however at the option of the Engineer, either "A" or "B" below may be imposed to assure quality before placement on the roadway.
   A. Select five (5) or more tabs at random from each lot or shipment and submit to the Construction Division, Materials and Pavement Section to determine specification compliance.
   B. Select five (5) tabs and perform the following test. Affix five (5) tabs at 24 inch intervals on an asphaltic pavement in a straight line. Using a medium size passenger vehicle or pickup, run over the markers with the front and rear tires at a speed of 35 to 40 miles per hour, four (4) times in each direction. No more than one (1) out of the five (5) reflective surfaces shall be lost or displaced as a result of this test.
3. Small design variances may be noted between tab manufacturers.
4. See Standard Sheet WZ(STPM) for tab placement on new pavements. See Standard Sheet TCP(7-1) for tab placement on seal coat work.

Raised Pavement Markers used as Guidemarks

1. Raised pavement markers used as guidemarks shall be from the approved product list, and meet the requirements of DMS-4200.
2. All temporary construction raised pavement markers provided on a project shall be of the same manufacturer.
3. Adhesive for guidemarks shall be bituminous material hot applied or butyl rubber pad for all surfaces, or thermoplastic for concrete surfaces.

Guidemarks shall be designated as:
YELLOW - (two amber reflective surfaces with yellow body).
WHITE - (one silver reflective surface with white body).

DEPARTMENTAL MATERIAL SPECIFICATIONS

PAVEMENT MARKERS (REFLECTORIZED)	DMS-4200
TRAFFIC BUTTONS	DMS-4300
EPOXY AND ADHESIVES	DMS-6100
BITUMINOUS ADHESIVE FOR PAVEMENT MARKERS	DMS-6130
PREFABRICATED PAVEMENT MARKINGS-PERMANENT	DMS-8240
PREFABRICATED PAVEMENT MARKINGS-REMOVABLE	DMS-8241
TEMPORARY FLEXIBLE-REFLECTIVE ROADWAY MARKER TABS	DMS-8242

A list of prequalified reflective raised pavement markers, non-reflective traffic buttons, roadway marker tabs and other pavement markings can be found at the Material Producer List web address shown on BC(1).

S&B INFRASTRUCTURE, LTD.
Engineering Management Technology
S&B Infrastructure, Ltd. Firm Registration Number: 1582

STATE OF TEXAS
PHILLIP J. PAWELEK
82739
REGISTERED PROFESSIONAL ENGINEER

The seal appearing on this document was authorized by PHILLIP J. PAWELEK P.E. 82739, on 6-11, 2009.

Phillip J. Pawelek, P.E.

BARRICADE AND CONSTRUCTION CHANNELIZING DEVICES STANDARD

SHEET 10 OF 12 SHEET

STATE	COUNTY	DRAWN BY: MK	CHECKED BY: --	
TEXAS	HIDALGO	PROJECT NO. IBM09T0018		SHEET NO.
REHABILITATION OF NORTH FLOODWAY NORTH AND SOUTH LEVEES (FM 1015 TO BASELINE RD)				15.12

m:\project\u450\u450515\800*working\files\dgn\045051580*STDS.dgn

TYPE III BARRICADES

1. Refer to the Compliant Work Zone Traffic Control Devices List (CWZTCD) for details of the Type III Barricades and a list of all materials used in the construction of Type III Baricades.
2. Type III Barricades shall be used at each end of construction projects closed to all traffic.
3. Barricades extending across a roadway should have stripes that slope downward in the direction toward which traffic must turn in detouring. When both right and left turns are provided, the chevron striping may slope downward in both directions from the center of the barricade. Where no turns are provided at a closed road striping should slope downward in both directions toward the center of roadway.
4. Striping of rails, for the right side of the roadway, should slope downward to the left. For the left side of the roadway, striping should slope downward to the right.
5. Identification markings may be shown only on the back of the barricade rails. The maximum height of letters and/or company logos used for identification shall be 1".
6. Barricades shall not be placed parallel to traffic unless an adequate clear zone is provided.
7. Warning lights shall NOT be installed on barricades.
8. Where barricades require the use of weights to keep from turning over, the use of sandbags with dry, cohesionless sand is recommended. The sandbags will be tied shut to keep the sand from spilling and to maintain a constant weight. Sand bags shall not be stacked in a manner that covers any portion of a barricade rails reflective sheeting. Rock, concrete, iron, steel or other solid objects will NOT be permitted. Sandbags should weigh a minimum of 35 lbs and a maximum of 50 lbs. Sandbags shall be made of a durable material that tears upon vehicular impact. Rubber (such as tire inner tubes) shall not be used for sandbags. Sandbags shall only be placed along or upon the base supports of the device and shall not be suspended above ground level or hung with rope, wire, chains or other fasteners.
9. Sheeting for barricades shall be retroreflective Type C (High Specific Intensity) conforming to Departmental Material Specfication DMS-8300 unless otherwise noted.

Barricades shall NOT be used as a sign support.

TYPE III BARRICADE (POST AND SKID) TYPICAL APPLICATION

Each roadway of a divided highway shall be barricaded in the same manner.

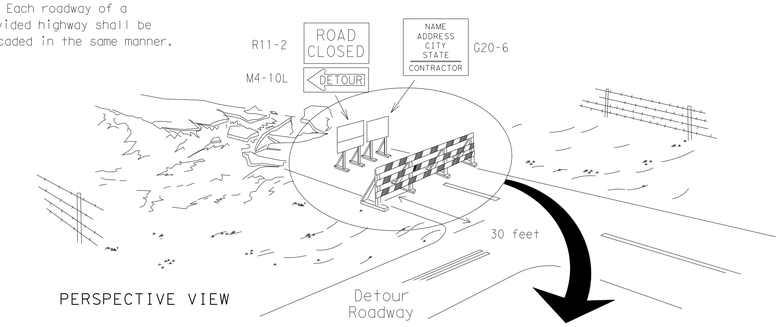

PERSPECTIVE VIEW

The three rails on Type III barricades shall be reflectorized orange and reflective white stripes on one side facing one-way traffic and both sides for two-way traffic.
Barricade striping should slant downward in the direction of detour.

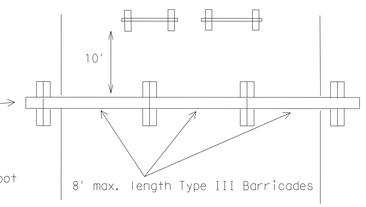

PLAN VIEW

1. Signs should be mounted on independent supports at a 7 foot mounting height in center of roadway. The signs should be a minimum of 10 feet behind Type III Barricades.
2. Advance signing shall be as specified elsewhere in the plans.

CULVERT WIDENING OR OTHER ISOLATED WORK WITHIN THE PROJECT LIMITS

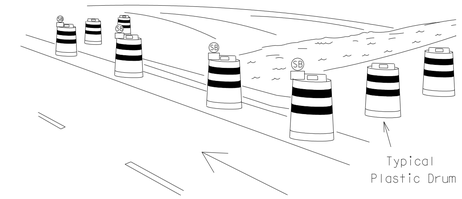

PERSPECTIVE VIEW

1. Where positive redirectional capability is provided, drums may be omitted.
2. Plastic construction fencing may be used with drums for safety as required in the plans.
3. Vertical Panels on flexible support may be substituted for drums when the shoulder width is less than 4 feet.
4. When the shoulder width is greater than 12 feet, steady-burn lights may be omitted if drums are used.
5. Drums must extend the length of the culvert widening.

These drums are not required on one-way roadway

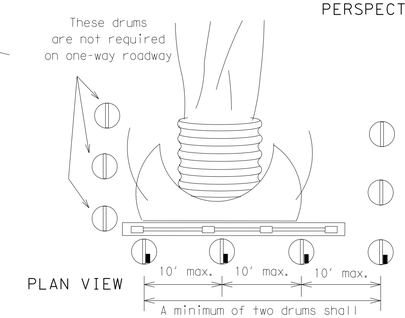

PLAN VIEW

Increase number of plastic drums on the side of approaching traffic if the crown width makes it necessary. (minimum of 2 and maximum of 4 drums)

Legend

- Plastic drum
- Plastic drum with steady burn light or yellow warning reflector
- SB Steady burn warning light or yellow warning reflector

TYPICAL STRIPING DETAIL FOR BARRICADE RAIL

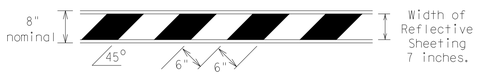

TYPICAL PANEL DETAIL FOR SKID OR POST TYPE BARRICADES

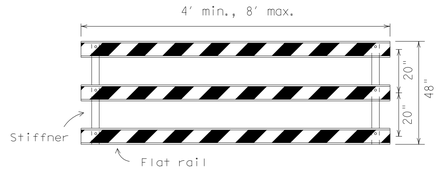

Stiffner may be inside or outside of support, but no more than 2 stiffeners shall be allowed on one barricade.

CONES

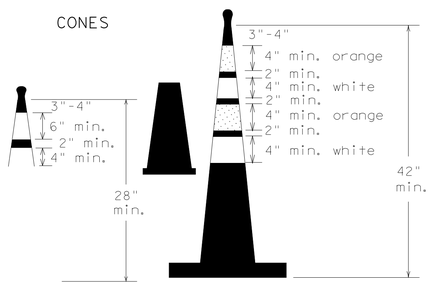

Two-Piece cones

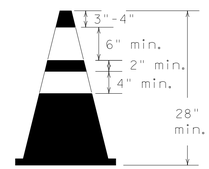

One-Piece cones

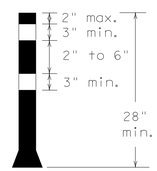

Tubular Marker

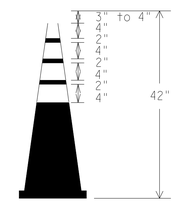

28" Cones shall have a minimum weight of 9 1/2 lbs.

42" 2-piece cones shall have a minimum weight of 30 lbs. including base.

1. Traffic cones and tubular markers shall be a minimum of 28 inches in height when used either on freeways or at nighttime.
2. Cones or tubular markers shall be predominantly orange, fluorescent red-orange, or fluorescent yellow-orange. They should be kept clean and bright for maximum visibility.
3. Cones used only for daytime operations do not require the reflectorized bands.
4. Cones and tubular markers used for nighttime operations shall be reflectorized. Reflectorized material shall have a smooth, sealed outer surface that displays the same approximate color during the day and night. The reflectorized bands shall be retroreflective Type C (High Specific Intensity) conforming to Departmental Material Specification DMS-8300, unless otherwise noted.
5. When used at night, appropriate personnel shall ensure that cones and tubular markers remain in their proper location and in an upright position.
6. Reflectorization of 28"cones shall consist of a minimum 6 inch band placed at least 3 inches but not more than 4 inches from the top, supplemented by a minimum 4 inch band spaced a minimum of 2 inches below the 6 inch band.
7. Reflectorization of 42" cones shall be provided by alternating 4 to 6" orange and white stripes with orange on top.
8. Reflectorization of tubular markers shall be a minimum of two 3 inch bands placed a maximum of 2 inches from the top with a maximum of 6 inches between bands.
9. One-piece cones or tubular markers are generally suitable for temporary usage (up to 8 hours) with other channelization devices such as vertical panels, drums or two-piece cones for long term usage. Care should be taken to ensure they remain in their proper location and in an upright position.
10. Cones or tubular markers used on each project shall be of the same size and shape.
11. The handle may be designed as a hook or other shape, fabricated from non-rigid materials similar to the cone material, and may extend up to a maximum of 8 inches above the top of cone. Length of the handle shall not be considered with regard to the overall height of the cone.

EDGELINE CHANNELIZER

1. This device is intended only for use in place of a vertical panel to channelize traffic by indicating the edge of the travel lane. It is not intended to be used in transitions or tapers.
2. This device shall not be used to separate lanes of traffic (opposing or otherwise) or warn of objects.
3. This device is based on a 42 inch, two-piece cone with an alternate striping pattern: four 4 inch retroreflective bands, with an approximate 2 inch gap between bands. The color of the band should correspond to the color of the edgeline (yellow for left edgeline, white for right edgeline) for which the device is substituted or for which it supplements. The reflectorized bands shall be retroreflective Type C encapsulated bead (High Specific Intensity) conforming to Departmental Material Specification DMS-8300, unless otherwise noted.
4. The base must weigh a minimum of 30 lbs.

TRAFFIC CONTROL FOR MATERIAL STOCKPILES

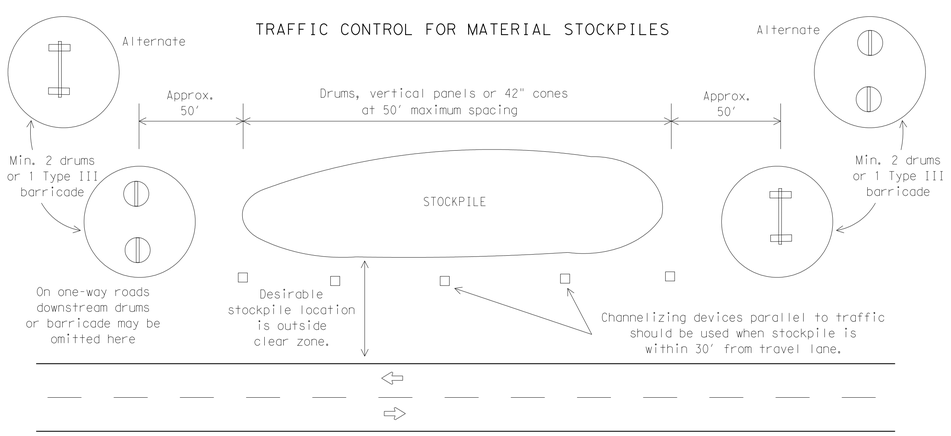

DISCLAIMER
The use of this standard is governed by the "Texas Engineering Practice Act". No warranty of any kind is made by TxDOT for any purpose whatsoever. TxDOT assumes no responsibility for the conversion of this standard to other formats or for incorrect results or damages resulting from its use.

LEVELS DISPLAYED
1 2 3 4 5 6 7 8 9 10 11 12 13 14 15 16 17 18 19 20 21 22 23 24 25 26 27 28 29 30 31 32 33 34 35 36 37 38 39 40 41 42 43 44 45 46 47 48 49 50 51 52 53 54 55 56 57 58 59 60 61 62 63 64 65 66 67 68 69 70 71 72 73 74 75 76 77 78 79 80 81 82 83 84 85 86 87 88 89 90 91 92 93 94 95 96 97 98 99 100

ACC:

S&R INFRASTRUCTURE, LTD.
Engineering Management Technology
S&B Infrastructure, Ltd. Firm Registration Number: 1582

STATE OF TEXAS
PHILLIP J. PAWELEK
82739
REGISTERED PROFESSIONAL ENGINEER

The seal appearing on this document was authorized by PHILLIP J. PAWELEK P.E. 82739, on 6-11, 2009.

Phillip J. Pawelek, P.E.

BARRICADE AND CONSTRUCTION PAVEMENT MARKINGS STANDARD

SHEET 11 OF 12 SHEET

STATE	COUNTY	DRAWN BY: MK	CHECKED BY: --	
TEXAS	HIDALGO	PROJECT NO. IBM09T0018		SHEET NO.
REHABILITATION OF NORTH FLOODWAY NORTH AND SOUTH LEVEES (FM 1015 TO BASELINE RD)				15.13

m:\project\u0450\u0450515\800\workingfiles\dgn\0450515BC-STD5.dgn

DISCLAIMER
The use of this standard is governed by the "Texas Engineering Practice Act". No warranty of any kind is made by TxDOT for any purpose whatsoever. TxDOT assumes no responsibility for the conversion of this standard to other formats or for incorrect results or damages resulting from its use.

CHANNELIZING DEVICES

VERTICAL PANELS (VPs)

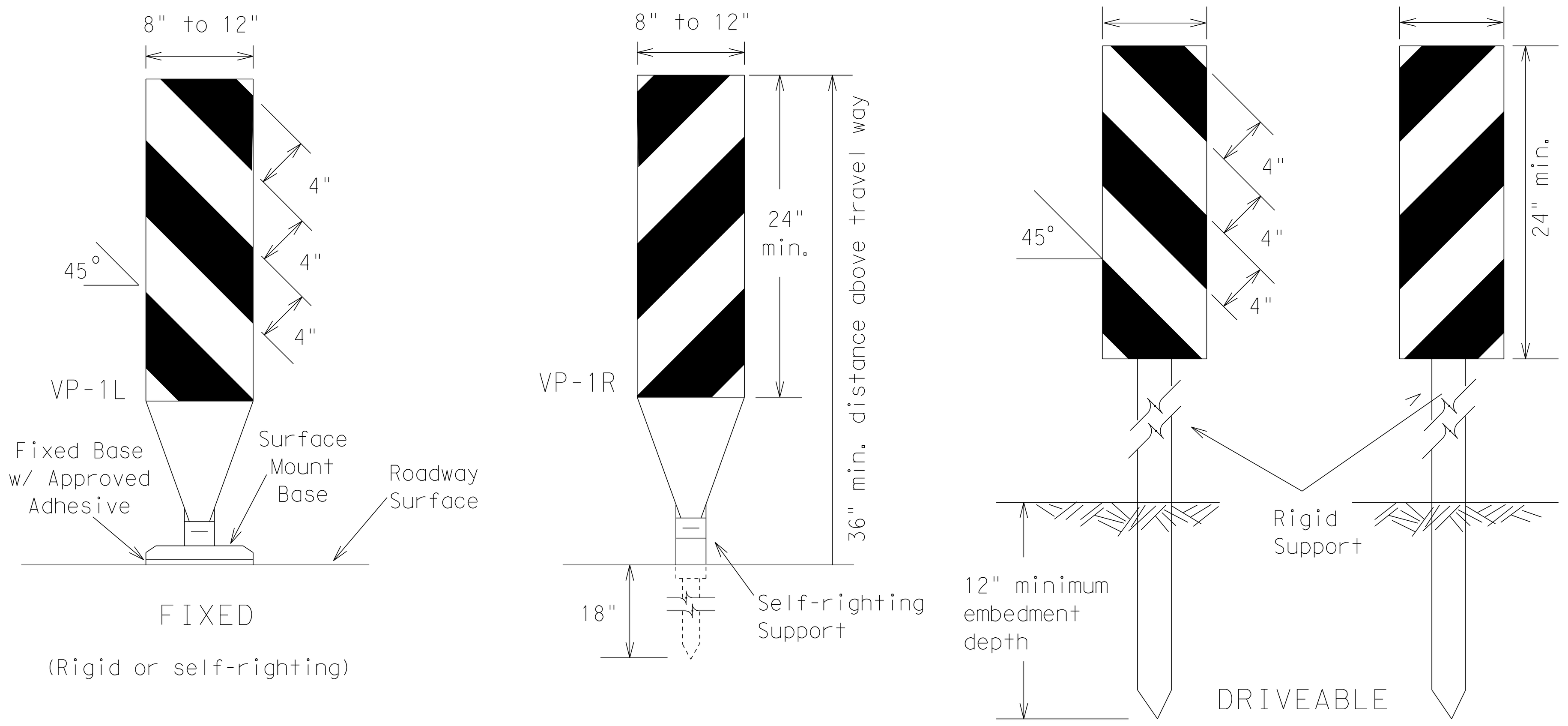

CHEVRONS

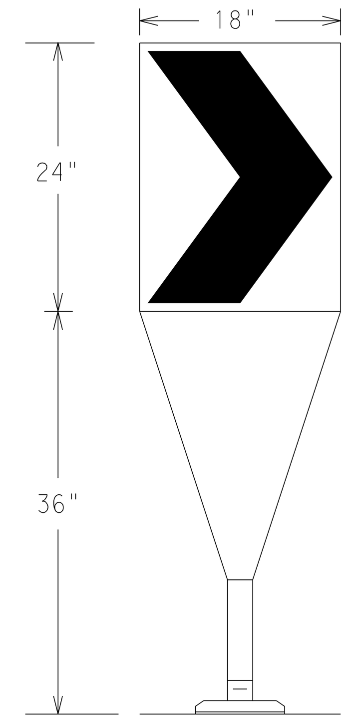

Fixed Base w/ Approved Adhesive (Driveable Base, or Flexible Support can be used)

1. The chevron shall be a vertical rectangle with a minimum size of 12 by 18 inches.
2. Chevrons are intended to give notice of a sharp change of alignment with the direction of travel and provide additional emphasis and guidance for vehicle operators with regard to changes in horizontal alignment of the roadway.
3. Chevrons, when used, shall be erected on the out-side of a sharp curve or turn, or on the far side of an intersection. They shall be in line with and at right angles to approaching traffic. Spacing should be such that the motorist always has three in view, until the change in alignment eliminates its need.
4. To be effective, the chevron should be visible for at least 500 feet.
5. Chevrons shall be orange with a black nonreflec-tive legend. Sheeting for the chevron shall be retroreflective Type E (Fluorescent Prismatic) conforming to Departmental Material Specification DMS-8300, unless noted otherwise. The legend shall be black vinyl non-reflective decal sheet-ing meeting the requirements of DMS-8300.
6. For Long Term Stationary use on tapers or transitions on freeways and divided highways self-righting chevrons may be used to supplement plastic drums but not to replace plastic drums.

GENERAL NOTES:

1. Work Zone channelizing devices illustrated on this sheet may be installed in close proximity to traffic and are suitable for use on high or low speed roadways. The Engineer/Inspector shall ensure that spacing and placement is uniform and in accordance with the "Texas Manual on Uniform Traffic Control Devices" (TMUTCD).
2. Channelizing devices shown on this sheet may have a driveable, fixed or portable base. The requirement for self-righting channelizing devices must be specified in the General Notes or other plan sheets.
3. Channelizing devices on self-righting supports should be used in work zone areas where channelizing devices are frequently impacted by errant vehicles or vehicle related wind gusts making alignment of the channelizing devices difficult to maintain. Locations of these devices shall be detailed else-where in the plans. These devices shall conform to the TMUTCD and the "Compliant Work Zone Traffic Control Devices List" (CWZTCD).
4. The Contractor shall maintain devices in a clean condition and replace damaged, nonreflective, faded, or broken devices and bases as required by the Engineer/Inspector. The Contractor shall be required to maintain proper device spacing and alignment.
5. Portable bases shall be fabricated from virgin and/or recycled rubber. The portable bases shall weigh approximately 35 lbs.
6. Pavement surfaces shall be prepared in a manner that ensures proper bonding between the adhesives, the fixed mount bases and the pavement surface. Adhesives shall be prepared and applied according to the manufacturer's recommendations.
7. The installation and removal of channelizing devices shall not cause detrimental effects to the final pavement surfaces, including pavement surface discoloration or surface integrity. Driveable bases shall not be permitted on final pavement surfaces. The Engineer/Inspector shall approve all application and removal procedures of fixed bases.
8. Examples on this sheet are commonly used channelizing devices in work zones. For other devices, refer to the CWZTCD.

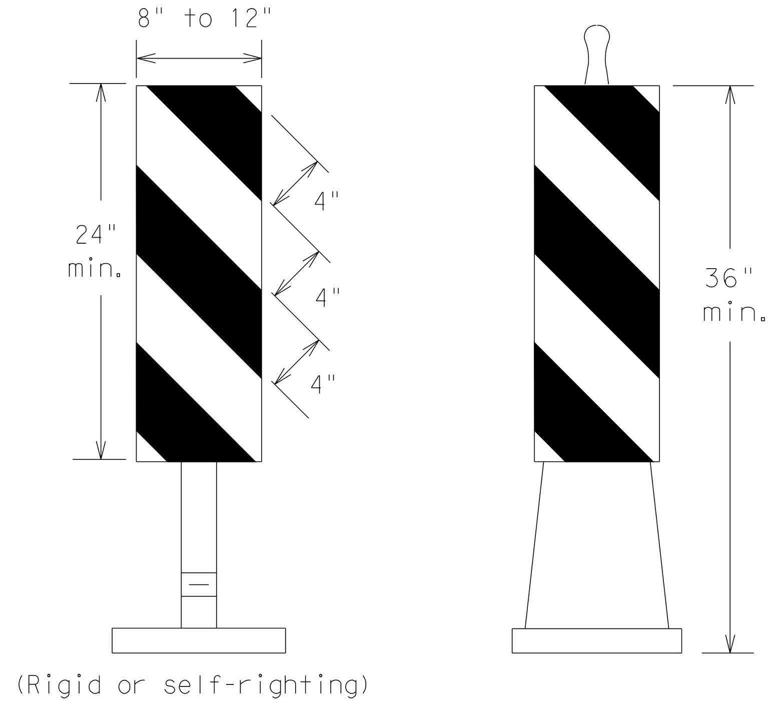

PORTABLE

1. Vertical Panels (VP's) are normally used to channelize traffic or divide opposing lanes of traffic.
2. VP's may be used in daytime or nighttime situations. They may be used at the edge of shoulder drop-offs and other areas such as lane transitions where positive daytime and nighttime delineation is required. The Engineer/Inspector shall refer to the Roadway Design Manual Appendix B "Treatment of Pavement Drop-offs in Work Zones" for additional guidelines on the use of VP's for drop-offs.
3. VP's should be mounted back to back if used at the edge of cuts adjacent to two-way two lane roadways. Stripes are to be reflective orange and reflective white and should always slope downward toward the travel lane.
4. VP's used on expressways and freeways or other high speed roadways, shall have a minimum of 270 square inches of retroreflective area facing traffic.
5. Self-righting supports are available with portable base. See "Compliant Work Zone Traffic Control Devices List" (CWZTCD).
6. Sheeting for the VP's shall be retroreflective Type C (High Specific Intensity) conforming to Departmental Material Specification DMS-8300, unless noted otherwise.
7. Where the height of reflective material on the vertical panel is greater than 36 inches, a panel stripe of 6 inches shall be used.

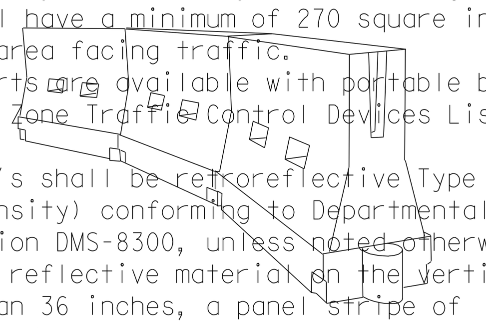

OPPOSING TRAFFIC LANE DIVIDERS (OTLD)

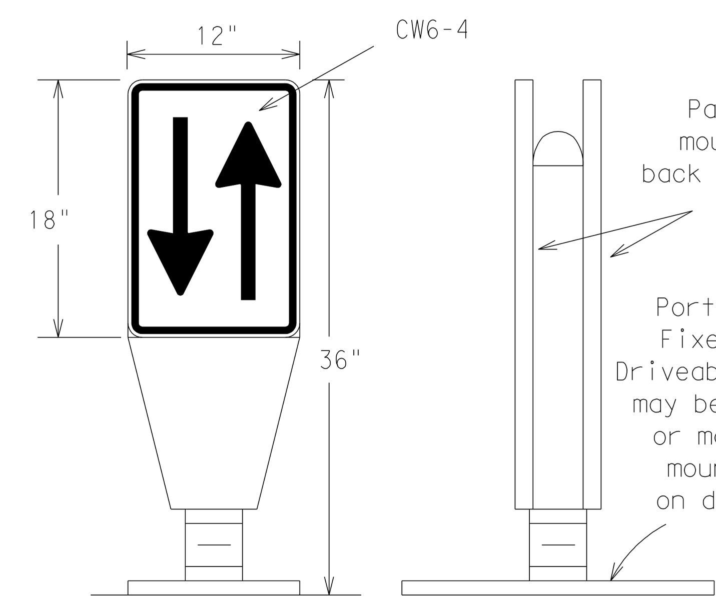

1. Opposing Traffic Lane Dividers (OTLD) are delineation devices designed to convert a normal one-way roadway section to two-way operation. OTLD's are used on temporary centerlines. The upward and downward arrows on the sign's face indicate the direction of traffic on either side of the divider. The base is secured to the pavement with an ad-hesive or rubber weight to minimize movement caused by a vehicle impact or wind gust.
2. The OTLD may be used in combination with simple tubular markers or VPs.
3. Spacing between the OTLD shall not exceed 500 feet. Tubular markers or VPs placed between the OTLD's should not exceed 100 foot spacing.
4. The OTLD shall be orange with a black non-reflective legend. Sheeting for the OTLD shall be retroreflective Type E (Fluorescent Prismatic) conforming to Departmental Material Specification DMS-8300, unless noted otherwise. The legend shall be black vinyl non-reflective decal sheeting meeting the requirements of DMS-8300.

Posted Speed	Formula	Minimum Desirable Taper Lengths ✱✱			Suggested Maximum Spacing of Channelizing Devices	
		10′ Offset	11′ Offset	12′ Offset	On a Taper	On a Tangent
30	$L = \frac{WS^2}{60}$	150′	165′	180′	30′	60′-75′
35		205′	225′	245′	35′	70′-90′
40		265′	295′	320′	40′	80′-100′
45	L=WS	450′	495′	540′	45′	90′-110′
50		500′	550′	600′	50′	100′-125′
55		550′	605′	660′	55′	110′-140′
60		600′	660′	720′	60′	120′-150′
65		650′	715′	780′	65′	130′-165′
70		700′	770′	840′	70′	140′-175′
75		750′	825′	900′	75′	150′-185′
80		800′	880′	960′	80′	160′-195′

✱✱ Taper lengths have been rounded off.
L=Length of Taper (FT.) W=Width of Offset (FT.)
S=Posted Speed (MPH)

HOLLOW OR WATER BALLASTED SYSTEMS USED AS LONGITUDINAL CHANNELIZING DEVICES OR BARRIERS

VERTICAL PANELS & OPPOSING TRAFFIC LANE DIVIDERS SEPARATING TWO-WAY TRAFFIC (Typical application)

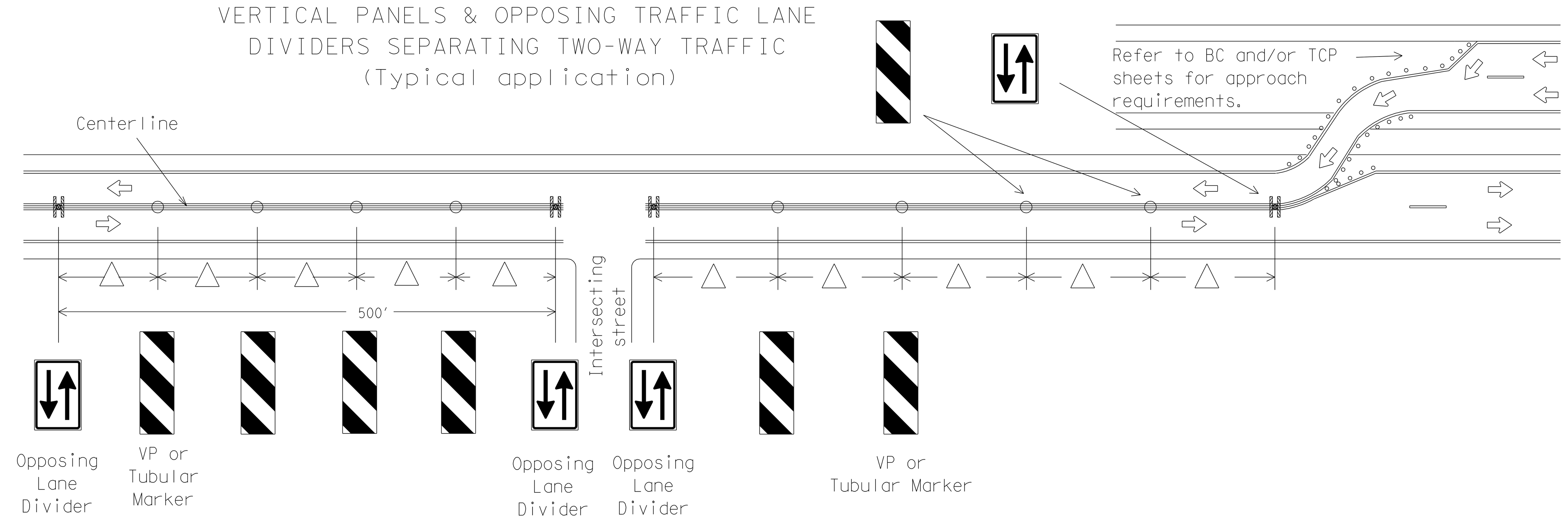

△ Spacing between the VP's or tubular markers shall not exceed 100 feet. On roadways with speeds less than 45 MPH, spacing between the tubular markers or VP's shall be as shown on the channelizing spacing table shown on this page. If the table shows spacing greater than 100 feet based on the roadway speed, then use a maximum of 100 feet spacing between the tubular markers or VP's. Every fifth channelizing device shall be an OTLD, except when the OLTD must be spaced closer to accomodate an intersection. Spacing between the OTLD shall not exceed 500 feet.

LONGITUDINAL CHANNELIZING DEVICES
1. Longitudinal channelizing devices are crashworthy, lightweight, deformable devices that are highly visible, have good target value and can be connected together. **They are not designed to contain or redirect a vehicle on impact.**
2. Longitudinal channelizing devices may be used instead of a line of cones or drums.
3. Longitudinal channelizing devices shall be placed in accordance to application and installation requirements specific to the device, and used only when shown on the CWZTCD list.
4. Longitudinal channelizing devices should not be used to provide positive protection for obstacles, pedestrians or workers.
5. Longitudinal channelizing devices shall be retroreflective, or supplemented with retroreflective delineation as required for temporary barriers on BC(7)-07.

WATER BALLASTED SYSTEMS USED AS BARRIERS
1. Water ballasted systems used as barriers shall not be used solely to channelize road users, but also to protect the work space per the appropriate NCHRP 350 crashworthiness requirements based on roadway speed and barrier application.
2. Water ballasted systems used to channelize vehicular traffic shall be supplemented with retroreflective delineation or channelizing devices to improve daytime/nighttime visibility. They may also be supplemented with pavement markings.
3. Water ballasted systems used as barriers shall be placed in accordance to application and installation requirements specific to the device, and used only when shown on the CWZTCD list.
4. Water ballasted systems used as barriers should not be used for a merging taper except in low speed (less than 45 MPH) urban areas. When used on a taper in a low speed urban area, the taper shall be delineated and the taper length should be designed to optimize road user operations considering the available geometric conditions.
5. When water ballasted systems used as barriers have blunt ends exposed to traffic, they should be attenuated as per manufacturer recommendations or flared to point outside the clear zone.

If used to channelize pedestrians, longitudinal channelizing devices or water ballasted systems must have a continuous detectable bottom for users of long canes and the top of the unit shall be not less than 32 inches in height.

LEVELS DISPLAYED | ACC:

1	2	3	4	5	6	7	8	9	10	11	12	13	14	15	16
17	18	19	20	21	22	23	24	25	26	27	28	29	30	31	32
33	34	35	36	37	38	39	40	41	42	43	44	45	46	47	48
49	50	51	52	53	54	55	56	57	58	59	60	61	62	63	

S&B INFRASTRUCTURE, LTD.
Engineering Management Technology
S&B Infrastructure, Ltd. Firm Registration Number: 1582

STATE OF TEXAS
PHILLIP J. PAWELEK
82739
REGISTERED PROFESSIONAL ENGINEER

The seal appearing on this document was authorized by PHILLIP J. PAWELEK P.E. 82739, on 6-11, 2009.

Phillip J. Pawelek, P.E.

BARRICADE AND CONSTRUCTION PAVEMENT MARKING PATTERNS STANDARD

SHEET 12 OF 12 SHEET

STATE	COUNTY	DRAWN BY: MK	CHECKED BY: --	
TEXAS	HIDALGO	PROJECT NO.	IBM09T0018	SHEET NO.
REHABILITATION OF NORTH FLOODWAY NORTH AND SOUTH LEVEES (FM 1015 TO BASELINE RD)				15.14

n:\project\u0450\u0450515\800*workingfiles\dgn\0450515BC*STDS.dgn

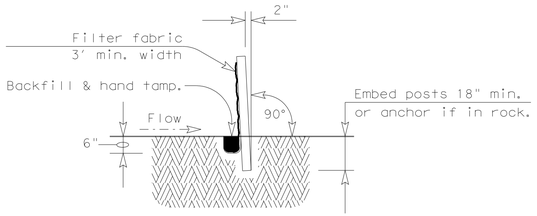

SECTION A-A

SEDIMENT CONTROL FENCE USAGE GUIDELINES

A sediment control fence may be constructed near the downstream perimeter of a disturbed area along a contour to intercept sediment from overland runoff. A 2 year storm frequency may be used to calculate the flow rate to be filtered.

Sediment control fence should be sized to filter a max. flow through rate of 100 GPM/FT^2. Sediment control fence is not recommended to control erosion from a drainage area larger than 2 acres.

GENERAL NOTES

The guidelines shown hereon are suggestions only and may be modified by the COR.

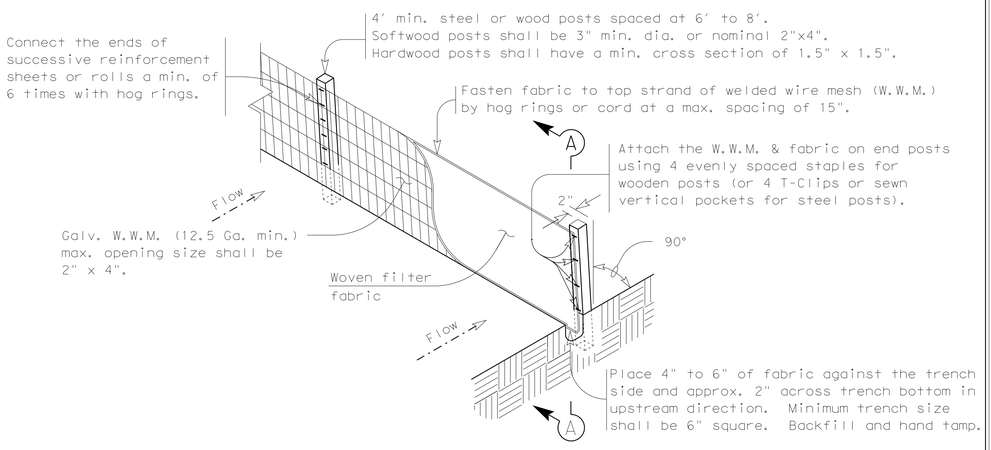

TEMPORARY SEDIMENT CONTROL FENCE

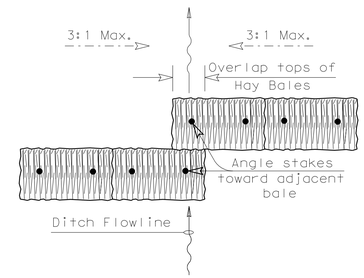

PLAN VIEW

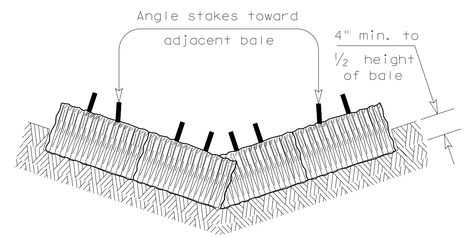

PROFILE VIEW

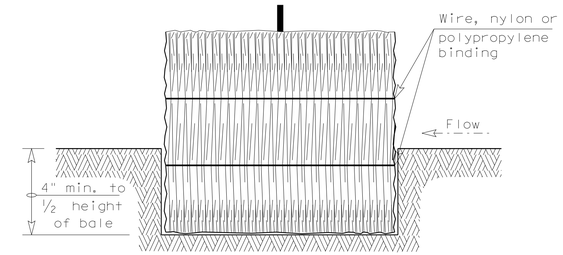

SECTION B-B

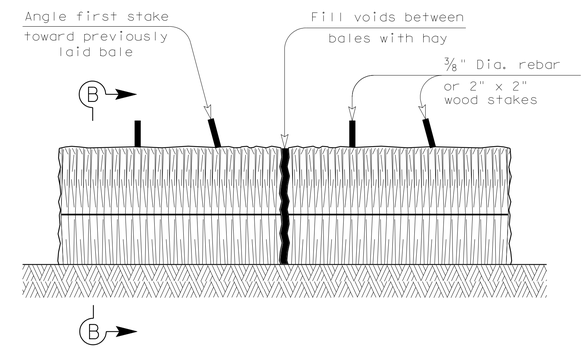

BALED HAY FOR EROSION CONTROL

GENERAL NOTES

1. Hay bales shall be a minimum of 30" in length and weigh a minimum of 50 Lbs.
2. Hay bales shall be bound by either wire or nylon or polypropylene string. The bales shall be composed entirely of vegetative matter.
3. Hay bales shall be embedded in the soil a minimum of 4" and where possible 1/2 the height of the bale.
4. Hay bales shall be placed in a row with ends tightly abutting the adjacent bales. The bales shall be placed with bindings parallel to the ground.
5. Hay bales shall be securely anchored in place with ⅜" Dia. rebar or 2" x 2" wood stakes, driven through the bales. The first stake shall be angled towards the previously laid bale to force the bales together.
6. The guidelines shown hereon are suggestions only and may be modified by the COR.

BALED HAY USAGE GUIDELINES

A Baled Hay installation may be constructed near the downstream perimeter of a disturbed area along a contour to intercept sediment from overland runoff. A two year storm frequency may be used to calculate the flow rate to be filtered. The installation should be sized to filter a maximum flow thru rate of 5 GPM/FT^2 of cross sectional area. Baled hay may be used at the following locations:

1. Where the runoff approaching the baled hay flows over disturbed soil for less than 100'. If the slope of the disturbed soil exceeds 10%, the length of slope upstream the baled hay should be less than 50'.
2. Where the installation will be required for less than 3 months.
3. Where the contributing drainage area is less than 1/2 acre.

For Baled Hay installations in small ditches, the additional following considerations apply:

1. The ditch sideslopes should be graded as flat as possible to maximize the drainage flowrate thru the hay.
2. The ditch should be graded large enough to contain the overtopping drainage when sediment has filled to the top of the baled hay.

Bales should be replaced usually every 2 months or more often during wet weather when loss of structural integrity is accelerated.

INTERNATIONAL BOUNDARY AND WATER COMMISSION
COMISION INTERNACIONAL DE LIMITES Y AGUAS

S&B INFRASTRUCTURE, LTD.
Engineering Management Technology

S&B Infrastructure, Ltd. Firm Registration Number: 1582

STATE OF TEXAS
PHILLIP J. PAWELEK
82739
REGISTERED PROFESSIONAL ENGINEER

The seal appearing on this document was authorized by PHILLIP J. PAWELEK P.E. 82739, on 6-11, 2009

Phillip J. Pawelek, P.E.

TEMPORARY EROSION, SEDIMENT AND WATER POLLUTION CONTROL MEASURES

TEMPORARY SEDIMENT CONTROL FENCE & BALED HAY

STATE	COUNTY	DRAWN BY:	CHECKED BY:	
TEXAS	HIDALGO	PROJECT NO.	IBM09T0018	SHEET NO.
REHABILITATION OF NORTH FLOODWAY NORTH AND SOUTH LEVEES (FM 1015 TO BASELINE RD)				15.15

n:\projects\u0450\u0450515\800workingfiles\dgn\0450515SEVL001.dgn

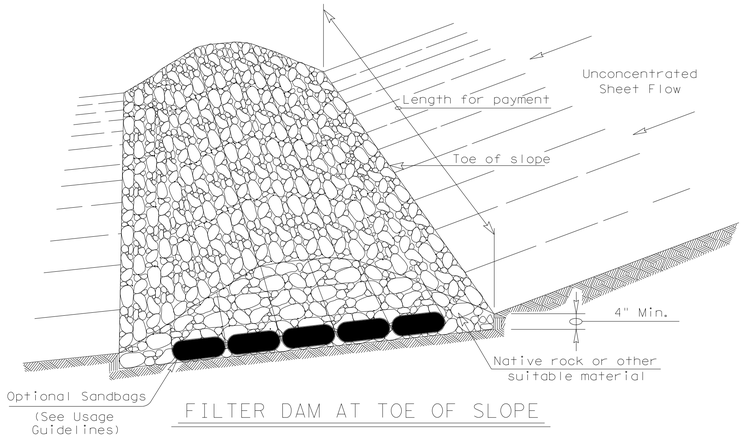

FILTER DAM AT TOE OF SLOPE

TYPE 1

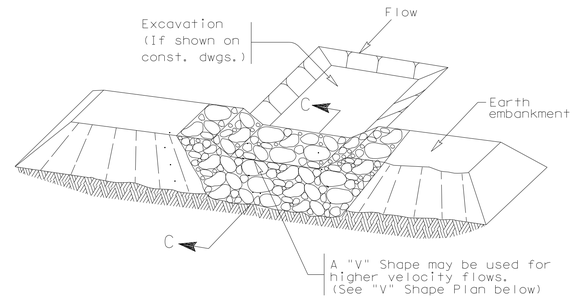

FILTER DAM AT SEDIMENT TRAP

TYPE 1 OR TYPE 2

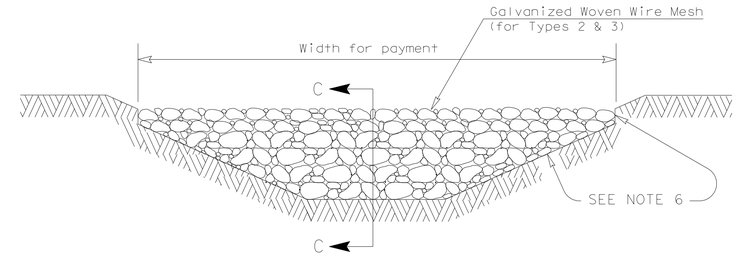

FILTER DAM AT CHANNEL SECTIONS

TYPE 1 OR TYPE 2

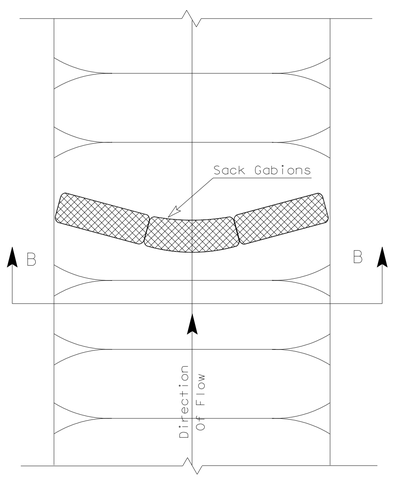

PLAN VIEW

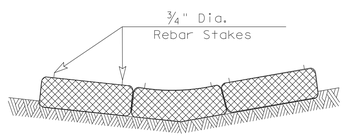

SECTION B-B

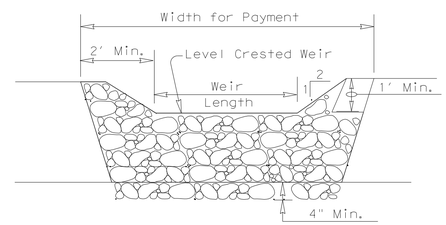

PROFILE

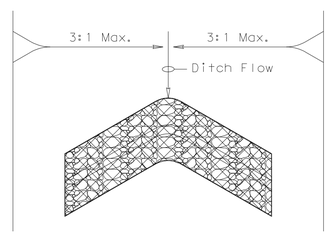

"V" SHAPE

(Plan View)

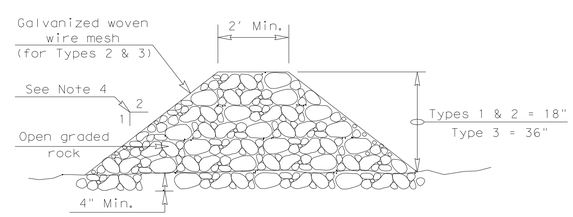

SECTION C-C

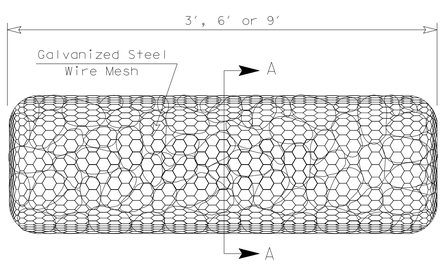

TYPE 4 (SACK GABIONS)

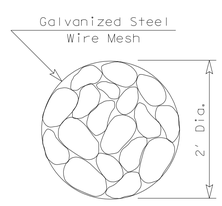

SECTION A-A

ROCK FILTER DAM USAGE GUIDELINES

Rock Filter Dams should be constructed downstream from disturbed areas to intercept sediment from overland runoff and/or concentrated flow. The dams should be sized to filter a maximum flow through rate of 60 GPM/FT^2 of cross sectional area. A 2 year storm frequency may be used to calculate the flow rate.

Type 1 (18" high with no wire mesh): Type 1 may be used at the toe of slopes, around inlets, in small ditches, and at dike or swale outlets. This type of dam is recommended to control erosion from a drainage area of 5 acres or less. Type 1 may not be used in concentrated high velocity flows (approx. 8 Ft/Sec or more) in which aggregate wash out may occur. Sandbags may be used at the embedded foundation (4" deep min.) for better filtering efficiency of low flows if called for on the plans or directed by the Engineer.

Type 2 (18" high with wire mesh): Type 2 may be used in ditches and at dike or swale outlets.

Type 3 (36" high with wire mesh): Type 3 may be used in stream flow and should be secured to the stream bed.

Type 4 (Sack gabions): Type 4 May be used in ditches and smaller channels to form an erosion control dam.

GENERAL NOTES

1. If shown on the plans or directed by the COR, filter dams should be placed near the toe of slopes where erosion is anticipated, upstream and/or downstream at drainage structures, and in roadway ditches and channels to collect sediment.
2. Materials (aggregate, wire mesh, sandbags, etc.) shall be as indicated by the specification for "Rock Filter Dams for Erosion and Sedimentation Control".
3. The rock filter dam dimensions shall be as directed by the COR.
4. Side slopes should be 2:1 or flatter. Dams within the roadway safety zone shall have sideslopes of 6:1 or flatter.
5. Maintain a minimum of 1' between top of rock filter dam weir and top of embankment for filter dams at sediment traps.
6. Filter dams should be embedded a minimum of 4" into existing ground.
7. The sediment trap for ponding of sediment laden runoff shall be of the dimensions shown on the plans.
8. Rock filter dam Types 2 & 3 shall be secured with 20 gauge galvanized woven wire mesh with 1" diameter hexagonal openings. The aggregate shall be placed on the mesh to the height & slopes specified. The mesh shall be folded at the upstream side over the aggregate and tightly secured to itself on the downstream side using wire ties or hog rings. In stream use the mesh should be secured or staked to the stream bed prior to aggregate placement.
9. Sack Gabions should be staked down with ¾" dia. rebar stakes.
10. Flow outlet should be onto a stabilized area (vegetation, rock, etc.).
11. The guidelines shown hereon are suggestions only and may be modified by the COR.

INTERNATIONAL BOUNDARY AND WATER COMMISSION
COMISION INTERNACIONAL DE LIMITES Y AGUAS

S&B INFRASTRUCTURE, LTD.
Engineering Management Technology

S&B Infrastructure, Ltd. Firm Registration Number: 1582

STATE OF TEXAS
PHILLIP J. PAWELEK
82739
REGISTERED PROFESSIONAL ENGINEER

The seal appearing on this document was authorized by PHILLIP J. PAWELEK P.E. 82739, on 6-11, 2009.

Phillip J. Pawelek, P.E.

TEMPORARY EROSION, SEDIMENT AND WATER POLLUTION CONTROL MEASURES

ROCK FILTER DAMS

STATE	COUNTY	DRAWN BY:	CHECKED BY:	
TEXAS	HIDALGO	PROJECT NO.	IBM09T0018	SHEET NO.
REHABILITATION OF NORTH FLOODWAY NORTH AND SOUTH LEVEES (FM 1015 TO BASELINE RD)				15.16

n:\project\u0450\u045015\800*working\files\dgn\045015SEVLC02.dgn

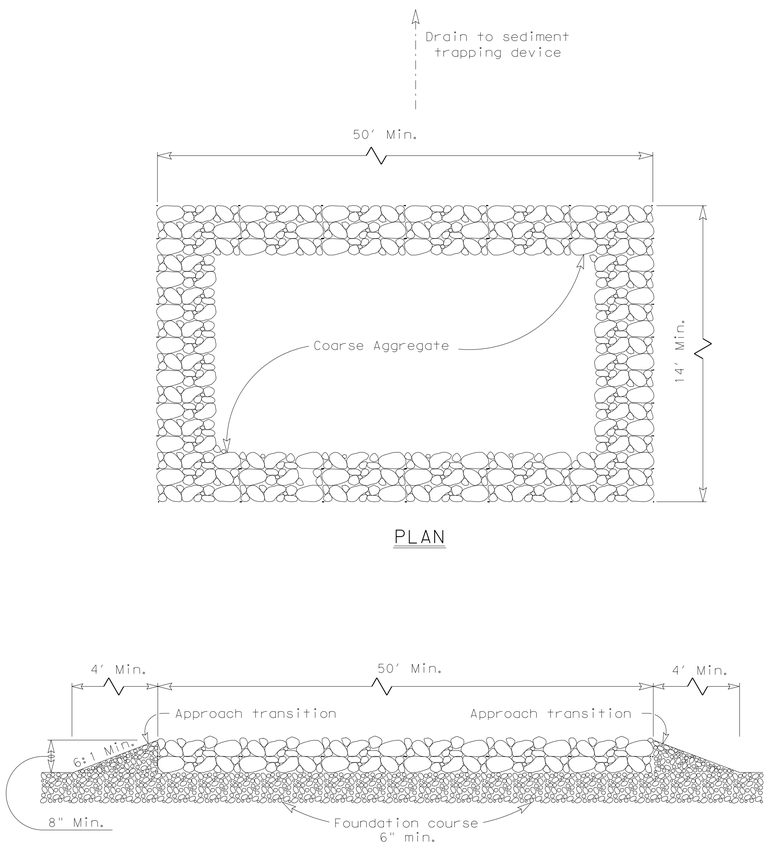

PLAN

PROFILE

CONSTRUCTION EXIT (TYPE 1)

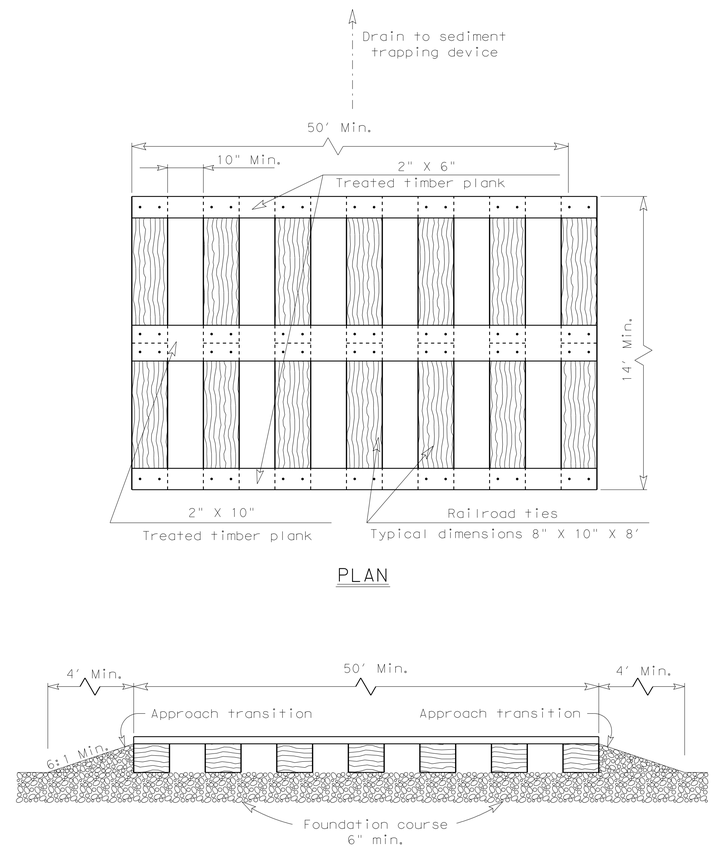

PLAN

PROFILE

CONSTRUCTION EXIT (TYPE 2)

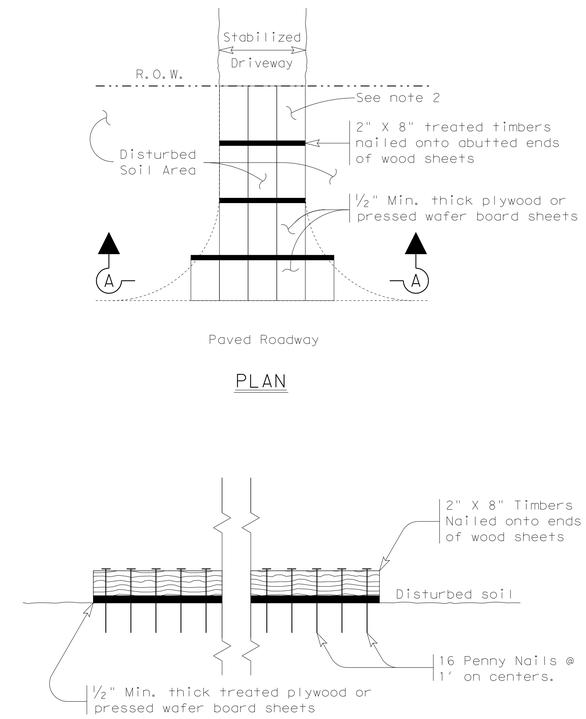

PLAN

SECTION A-A

CONSTRUCTION EXIT (TYPE 3)

GENERAL NOTES

1. The length of the Type 1 construction exit shall be not less than 50'.
2. The coarse aggregate should be open graded with a size of 4" to 8".
3. The approach transitions should be no steeper than 6:1 and constructed as directed by the COR.
4. The construction exit foundation course shall be flexible base, bituminous concrete, portland cement concrete or other material as approved by the COR.
5. The construction exit shall be graded to allow drainage to a sediment trapping device.
6. The guidelines shown hereon are suggestions only and may be modified by the COR.

GENERAL NOTES

1. The length of the Type 2 construction exit shall be not less than 50'.
2. The treated timber planks shall be attached to the railroad ties with 1/2 "x 6" min. lag bolts. Other fasteners may be used as approved by the COR.
3. The treated timber planks shall be #2 grade min., and should be free from large and loose knots.
4. The approach transitions shall be no steeper than 6:1 and constructed as directed by the COR.
5. The construction exit foundation course shall be flexible base, bituminous concrete, portland cement concrete or other material as approved by the COR.
6. The construction exit should be graded to allow drainage to a sediment trapping device.
7. The guidelines shown hereon are suggestions only and may be modified by the COR.

GENERAL NOTES

1. The length of the Type 3 construction exit shall be as directed by the Engineer.
2. The Type 3 construction exit may be constructed from open graded crushed stone with a size of two to four inches spread a min. of 4" thick to the limits shown on the plans.
3. The treated timber planks shall be #2 grade min., and should be free from large and loose knots.
4. The guidelines shown hereon are suggestions only and may be modified by the COR.

INTERNATIONAL BOUNDARY AND WATER COMMISSION
COMISION INTERNACIONAL DE LIMITES Y AGUAS

S&B INFRASTRUCTURE, LTD.
Engineering Management Technology

S&B Infrastructure, Ltd. Firm Registration Number: 1582

STATE OF TEXAS
PHILLIP J. PAWELEK
82739
REGISTERED PROFESSIONAL ENGINEER

The seal appearing on this document was authorized by PHILLIP J. PAWELEK P.E. 82739, on 6-11, 2009.

Phillip J. Pawelek, P.E.

TEMPORARY EROSION, SEDIMENT AND WATER POLLUTION CONTROL MEASURES

CONSTRUCTION EXITS

STATE	COUNTY	DRAWN BY:	CHECKED BY:	
TEXAS	HIDALGO	PROJECT NO.	IBM09T0018	SHEET NO.
REHABILITATION OF NORTH FLOODWAY NORTH AND SOUTH LEVEES (FM 1015 TO BASELINE RD)				15.17

n:\project\u0450\u0450515\800*workingfiles\dgn\0450515SEVLC03.dgn

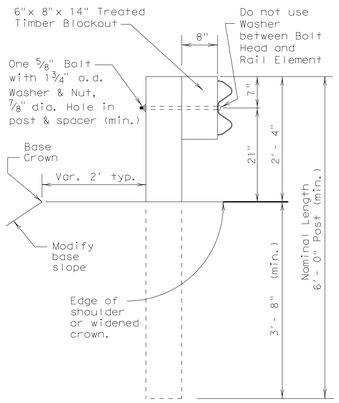

TYPICAL POST

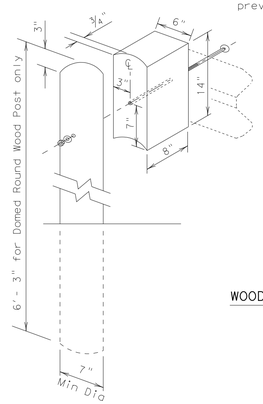

WOOD BLOCKOUT TO ROUND WOOD POST DETAIL

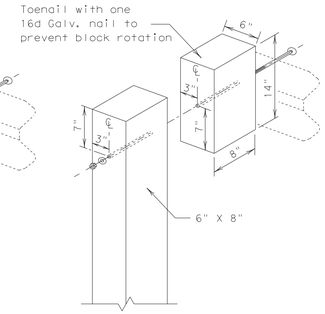

WOOD BLOCKOUT TO RECTANGULAR WOOD POST DETAIL

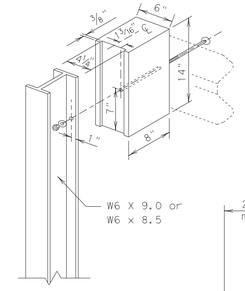

WOOD BLOCKOUT TO STEEL POST DETAIL

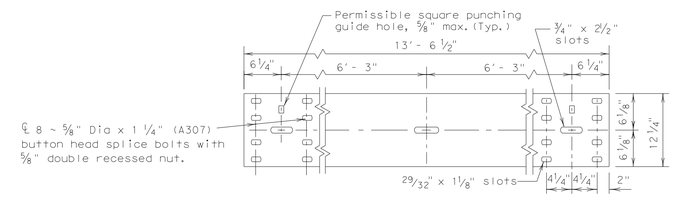

ELEVATION OF NOMINAL 12 1/2 FOOT GUARDRAIL

(25 foot sections may also be supplied)

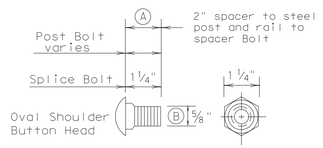

SPLICE BOLT

(A) 1 1/4" spacer to steel post hex bolt. 2" rail to spacer button head bolt.

(B) (7/8" hex bolts required for terminal connector)

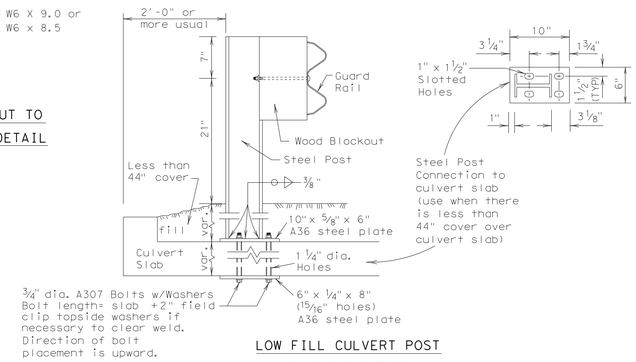

LOW FILL CULVERT POST MOUNTING OPTION

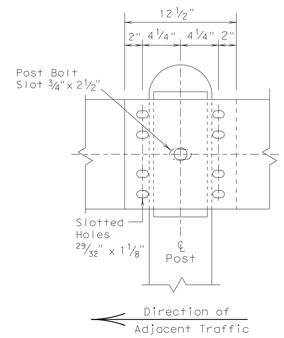

RAIL SPLICE

GENERAL NOTES

1. The exact position of guard fence shall be as shown elsewhere on the plans or as directed by the Engineer. Guard fence shall be transitioned to a smooth connection with other guard fence or structure railing as shown elsewhere on plans.
2. Rail element shall meet all requirements of AASHTO M-180 except as modified on the plans. The terminal connectors shall be of the same material, but shall not be less than 10 gauge. Contractor shall verify that the locations of bolt holes match those in the Terminal Connector prior to ordering of materials.
3. Unless otherwise shown in the plans, guard fence placed in the vicinity of curbs shall be blocked out so that the face of curb is located directly below or behind the face of the blockout. Rail placed over curbs shall be installed so that the post bolt is located approximately 21-inches above the gutter pan or roadway surface.
4. Unless otherwise shown in the plans, MBGF shall be placed with the face of rail directly above the shoulder edge (or curbface) except for upstream end treatments.
5. At the option of the Contractor, the rail elements for the guard fence may be furnished in either 12 1/2 or 25 foot nominal lengths with post bolt slots for connection to posts.
6. The terminal anchor post shall be set in Class "A" concrete in (unless otherwise shown on plans) in accordance with Item, "Portland Cement Concrete". Concrete shall be subsidiary to the bid item requiring construction of the terminal rail section and anchorage system.
7. An anchor other than to a terminal anchor post shall consist of a connection similar to the rail splice or similar to the terminal connector.
8. Galvanized washers used with the eight 5/8" splice bolts and nuts that are provided for terminal connectors and/or terminal anchor posts shall be 1 3/4"x 3"x 3/16", or 1" i.d. and 2" o.d. x 0.134" (ANSI B27.2) narrow Type A plain washers.
9. Special fabrication will be required at installations having a curvature of less than 150' radius.
10. Button head post bolts (A307) shall be of sufficient length to extend through the full thickness of the nut and no more than 3/4" beyond it. Button head splice bolts (A307) are 5/8"x 1 1/4" with a 5/8" double recessed nut. Fittings (bolts, nuts, and washers) shall be in accordance with Item, Metal for Structures". Fittings shall be subsidiary.
11. Crown will be widened to accommodate guard fence.
12. If guardrail is placed on a side slope away from the pavement edge, then the slope rate between the edge of the pavement and the face of the barrier will be 1V:10H or flatter.
13. Posts shall not be set full depth in concrete.
14. Where solid rock is encountered or where shown on the plans, the diameter of the holes shall be approximately 12 inches, the backfilling shall be with a cohesionless material, and embedment depth shall be 1'-6" or more as directed by the Engineer.
15. Unless otherwise directed by the Engineer, a composite material post and/or blockout from the Department approved list of suppliers may be substituted for a post and/or blockout of similar dimensions. The list of approved suppliers of posts and blockouts will be maintained by the Construction Division, TxDOT.

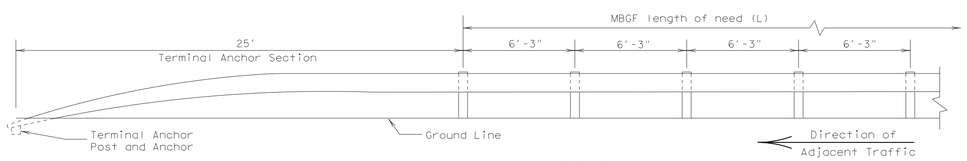

ELEVATION FOR TERMINAL ANCHOR SECTION (TAS)

(Terminal anchor sections are only for downstream guardrail end anchorage usage outside the horizontal clearance area of opposing traffic)

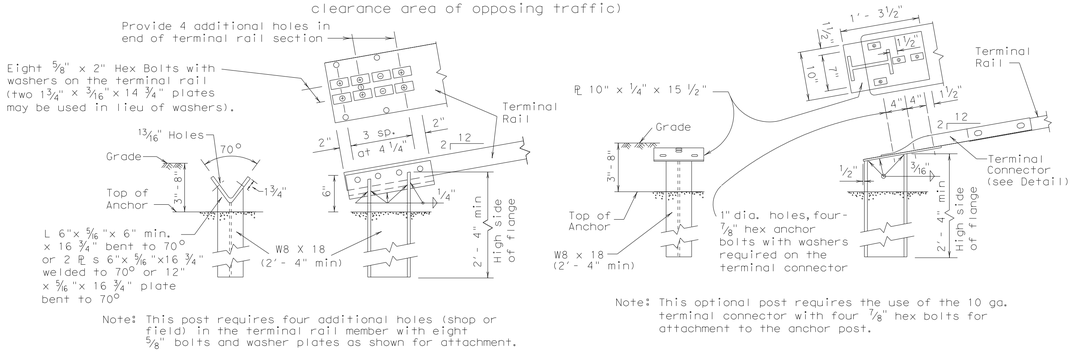

Note: This post requires four additional holes (shop or field) in the terminal rail member with eight 5/8" bolts and washer plates as shown for attachment.

Note: This optional post requires the use of the 10 ga. terminal connector with four 7/8" hex bolts for attachment to the anchor post.

TERMINAL ANCHOR POST OPTIONS

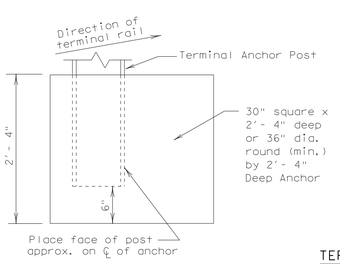

Notes:

Either post may be used with either anchor.

No construction joint is allowed in the concrete anchor.

Terminal rail may be bolted to post and in twist position prior to placing concrete anchor.

If concrete anchor is precast, the area should be compacted as directed by the Engineer, when placed in the field.

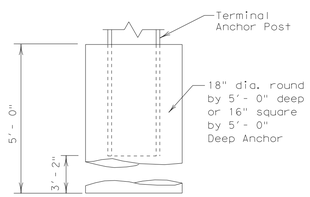

TERMINAL CONCRETE ANCHOR OPTIONS

TERMINAL CONNECTOR : The terminal connector may also be used on the MBGF(TL2) transition (See MBGF(TL2) Standard Sheet), or on the downstream end of a concrete rail located outside the horizontal clearance area of opposing traffic. (See BED Standard Sheet)

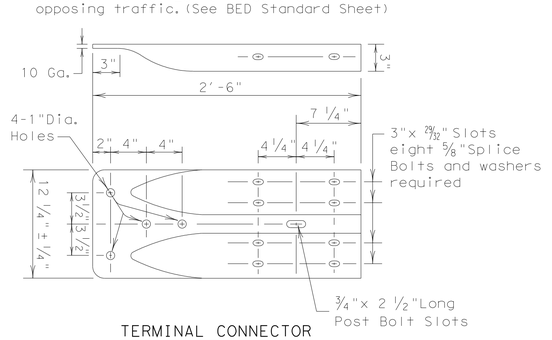

TERMINAL CONNECTOR

S&B INFRASTRUCTURE, LTD.

Engineering Management Technology

S&B Infrastructure, Ltd. Firm Registration Number: 1582

STATE OF TEXAS
PHILLIP J. PAWELEK
82739
REGISTERED PROFESSIONAL ENGINEER

The seal appearing on this document was authorized by PHILLIP J. PAWELEK P.E. 82739, on 6-11, 2009

Phillip J. Pawelek, P.E.

METAL BEAM GUARD FENCE

SHEET 1 OF 1 SHEET

STATE	COUNTY	DRAWN BY:	CHECKED BY:	
TEXAS	HIDALGO	PROJECT NO.	IBM09T0018	SHEET NO.
REHABILITATION OF NORTH FLOODWAY NORTH AND SOUTH LEVEES (FM 1015 TO BASELINE RD)				15.18

N:\Project\U0450\U045051X800\WorkingFiles\Dgn\U045051MBGF03A.dgn

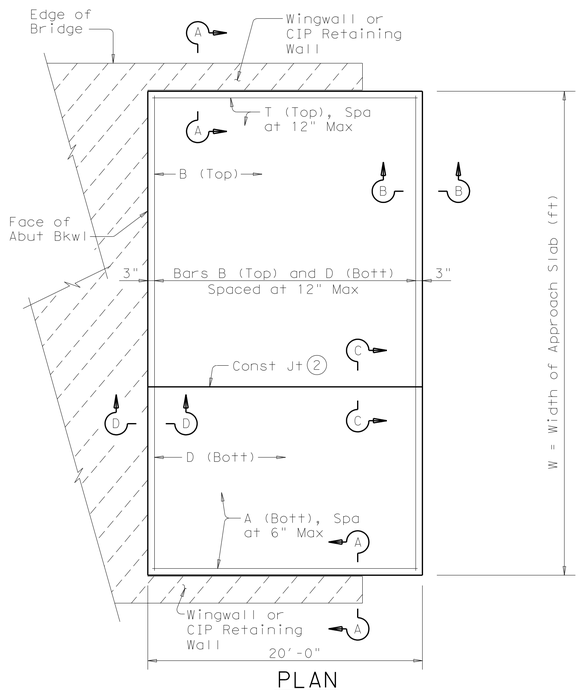

PLAN

(Showing Non-Skewed Approach Slab)

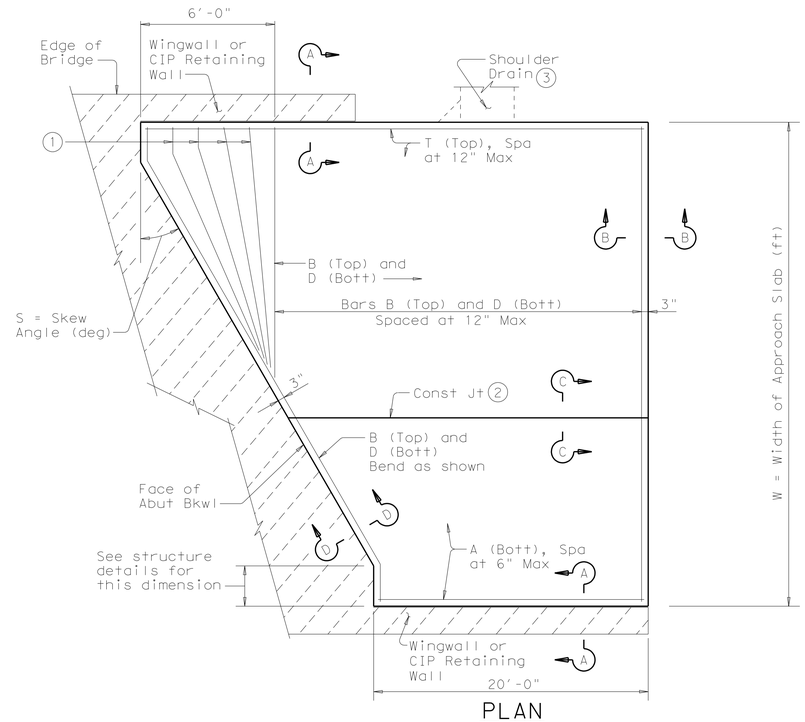

PLAN

(Showing Skewed Approach Slab)

BAR TABLE	
BAR	SIZE
A	#8
B	#5
D	#5
T	#5

APPROXIMATE QUANTITIES (4)

Reinf steel weight = 8.5 Lbs/SF of Approach Slab

Area of Appr Slab = $20W + 0.5W^2 \tan S$ (SF)

W = Width of Approach Slab (ft)

S = Skew Angle (deg)

(1) Flare Bars B and D in this region (1'-6" Max Spa, 3" Min Spa). Minimum flared bar length = 2'-6". Bend bars as necessary.

(2) Provide longitudinal construction joints that align with longitudinal construction joints in the bridge slab with bridges built in stages. Other longitudinal construction joints must receive approval of the Engineer.

(3) See details elsewhere in plans for shoulder drain location and details.

(4) For Contractor's information only.

(5) Multiple piece tie bars are acceptable at longitudinal construction joints provided minimum laps shown are achieved.

(6) See details elsewhere in plans for required cross-slope.

(7) Place in accordance with Item 438.

(8) Backer rod shall be 25% larger than joint opening and shall be compatible with the sealant.

(9) Place ½" Preformed Bituminous Fiber Material between concrete railing and top of approach slab as shown when concrete railing projects over the approach slab.

GENERAL NOTES:

Construct approach slab in accordance with Item 420.

Concrete shall be Class "S" with a minimum compressive strength of 4,000 psi.

All reinforcing steel shall be Grade 60.

Construct the subgrade or subbase from the bridge for a minimum distance of 100 feet prior to the approach slab, unless otherwise indicated on the plans.

Compact and finish the subgrade or foundation for the approach slab to the typical cross-section and to the lines and grades shown on the plans.

Cure for 4 days using water or membrane curing per Item 420.

Sealant, backer rod and preformed bituminous fiber material is subsidiary to approach slab concrete.

Provide a 1" bondbreaker (asphaltic concrete pavement or asphalt stabilized base) between the approach slab and cement stabilized backfill or cement treated base. Other bondbreakers may be used if approved by the Engineer.

DISCLAIMER:
The use of this standard is governed by the "Texas Engineering Practice Act". No warranty is made by TxDot for any purpose whatsoever. TxDot assumes no responsibility for the conversion of this standard to other formats or for incorrect results or damages resulting from its use.

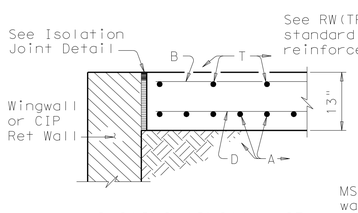

SHOWING WINGWALL OR CIP RETAINING WALL

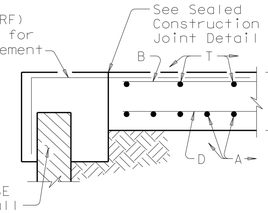

SHOWING MSE WALL

SECTION A-A

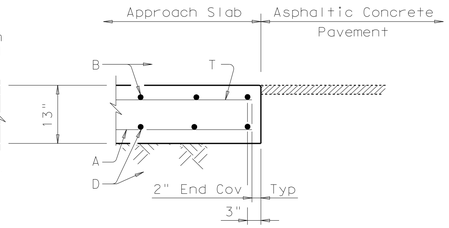

SECTION B-B

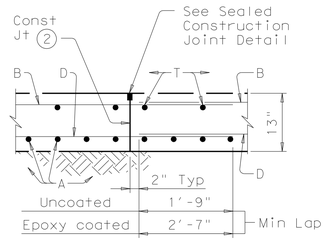

SECTION C-C (5)

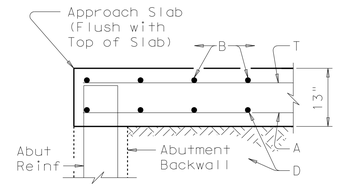

SECTION D-D

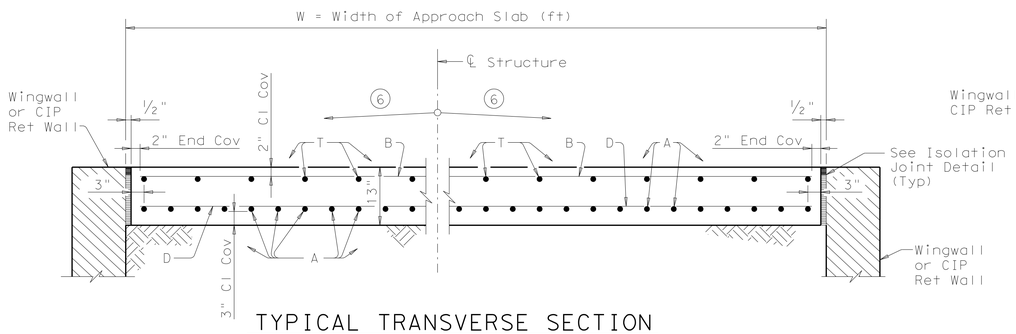

TYPICAL TRANSVERSE SECTION

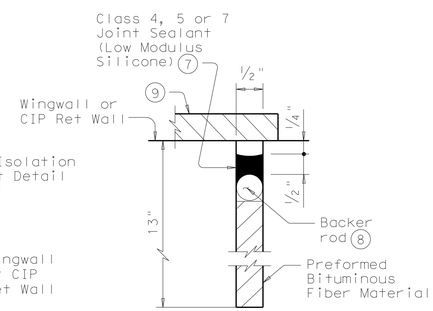

ISOLATION JOINT DETAIL

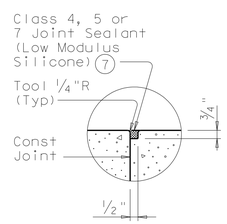

SEALED CONSTRUCTION JOINT DETAIL

PATH:

LEVELS DISPLAYED

1

S&B INFRASTRUCTURE, LTD.
Engineering Management Technology

S&B Infrastructure, Ltd. Firm Registration Number: 1582

STATE OF TEXAS
MANCHING WEI
84851
REGISTERED PROFESSIONAL ENGINEER

The seal appearing on this document was authorized by MANCHING WEI P.E. 84851, on June 11, 2019

BRIDGE APPROACH SLAB
ASPHALTIC CONCRETE PAVEMENT

SHEET 1 OF 1 SHEET

STATE	COUNTY	DRAWN BY: MK	CHECKED BY: --	
TEXAS	HIDALGO	PROJECT NO. IBM09T0018		SHEET NO.
REHABILITATION OF NORTH FLOODWAY NORTH AND SOUTH LEVEES (FM 1015 TO BASELINE RD)				15.19

N:\Project\u0450\U045051 5800\WorkingFiles\Dgn\U045051 5BRDG-APPR.dgn

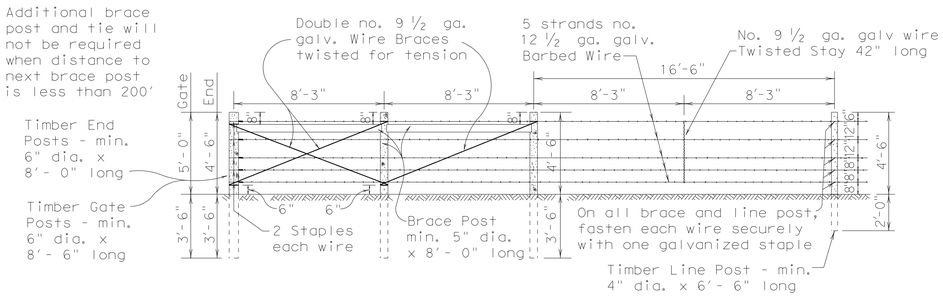

SECTION GALVANIZED BARBED WIRE FENCE WITH WOOD POSTS

Bracing Detail Used at Ends and Gates

TYPE "A" FENCE

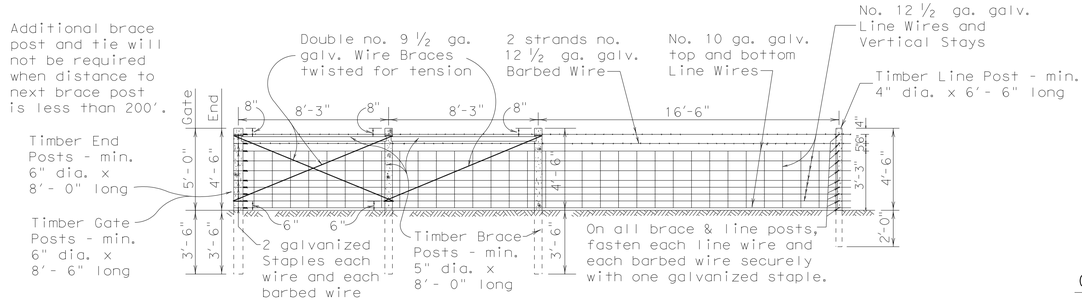

SECTION GALVANIZED WOVEN WIRE FENCE WITH WOOD POSTS

Bracing Detail Used at Ends and Gates

TYPE "B" FENCE

TABLE OF EQUIVALENT SIZES FOR OPTIONAL SHAPE

Minimum Diameter of Round Post (Inches)	Minimum Equivalent Dimension for Each Side of Square Post (Inches)
4	3 1/2
5	4 1/2
6	5 1/4

GENERAL NOTES

1. Any high point which interferes with the placing of wire mesh shall be excavated to provide 2" clearance.
2. Latches for Type 1 and Type 2 gates shall be good commercial quality and design latches of the spring, fork or chain type. All latches shall be suitable for the gate and shall be approved by the Engineer.
3. Hinges for Type 2 gates shall be commercial design approved by the Engineer suitable for post and gate.
4. Concrete shall be of the design and consistency approved by the Engineer and shall contain not less than 4 sacks of cement per yard.
5. If rock is encountered at a depth less than the embedded depth required, a 15" or larger diameter hole shall be drilled for the post and the post shall be set in concrete. If rock is encountered at a depth of 1'- 6" or more below the ground surface, the hole shall be drilled to the required depth. If rock is encountered at a depth less than 1'- 6" below the ground surface, the holes shall be drilled a minimum of 2'- 0" into the rock or to the depth whichever is the lesser depth.
6. The location of gates and corner posts will be as indicated elsewhere on these plans.
7. Square posts may be used in lieu of round posts provided minimum equivalent size requirements as tabulated hereon are met.

Metal gate shall consist of 5 panels not less than 4'- 4" high and shall be aluminum or galvanized metal and of good quality. Gate and hardware shall meet the approval of the Engineer.

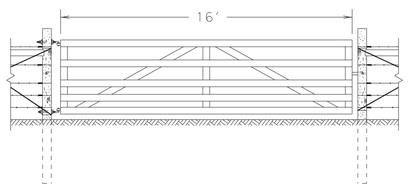

DETAIL TYPE 1 GATE

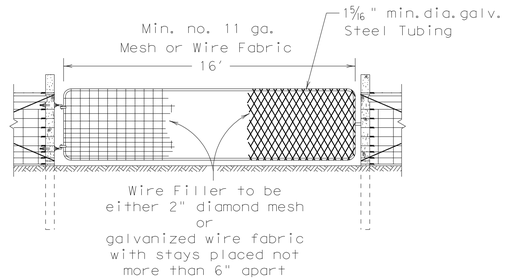

DETAIL TYPE 2 GATE

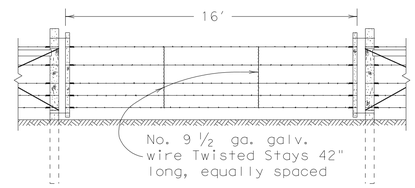

DETAIL TYPE 3 GATE

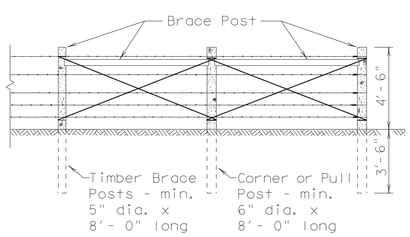

CORNER OR PULL POST ASSEMBLY

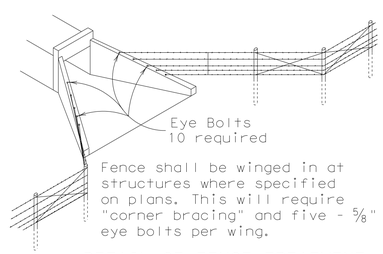

DETAIL OF FENCE TREATMENT AT STRUCTURES

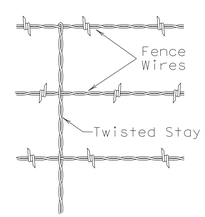

DETAIL OF STAY

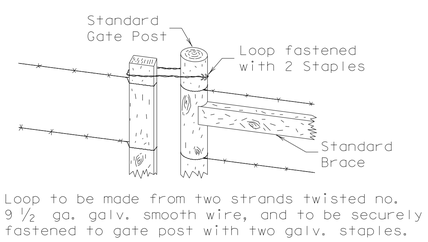

DETAIL FASTENER TYPE 3 GATE

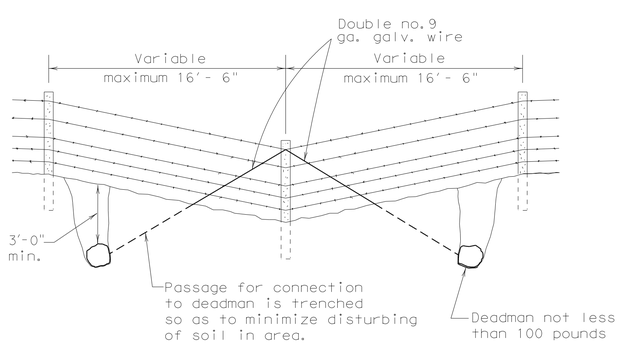

DETAIL OF FENCE SAG

(Single Line Connection)

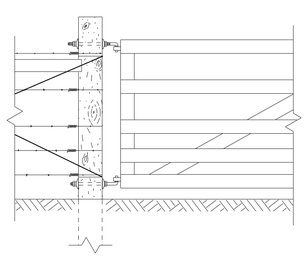

DETAIL SHOWING INSTALLATION OF HINGES OF TYPE 1 & 2 GATE

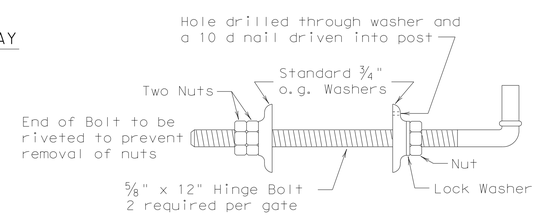

DETAIL OF GATE HINGE BOLT ASSEMBLY

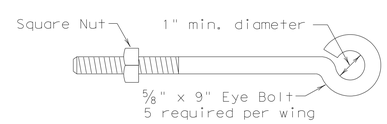

DETAIL OF EYE BOLT

S&B INFRASTRUCTURE, LTD.

Engineering Management Technology

S&B Infrastructure, Ltd. Firm Registration Number: 1582

STATE OF TEXAS
PHILLIP J. PAWELEK
82739
REGISTERED PROFESSIONAL ENGINEER

The seal appearing on this document was authorized by PHILLIP J. PAWELEK P.E. 82739, on 6-11, 2009.

Phillip J. Pawelek, P.E.

BARBED WIRE FENCE AND WOVEN WIRE FENCE TIMBER POSTS

SHEET 1 OF 1 SHEET

STATE	COUNTY	DRAWN BY: JJL/JL	CHECKED BY: PP	
TEXAS	HIDALGO	PROJECT NO. IBM09T0018		SHEET NO.
REHABILITATION OF NORTH FLOODWAY NORTH AND SOUTH LEVEES (FM 1015 TO BASELINE RD)				15.20

N:\Project\U0450\U045015\800\WorkingFiles\Strids\WF194.dgn

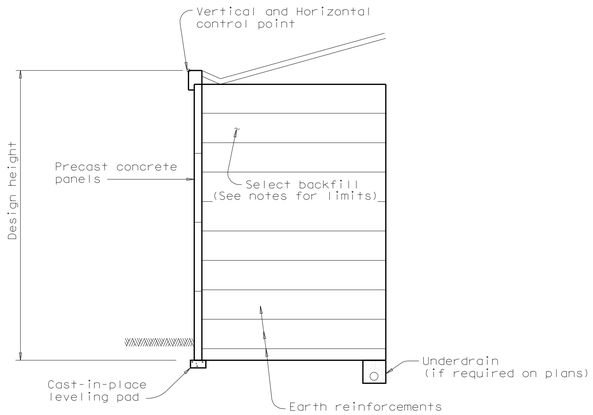

TYPICAL SECTION

(Wall at bottom of slope)

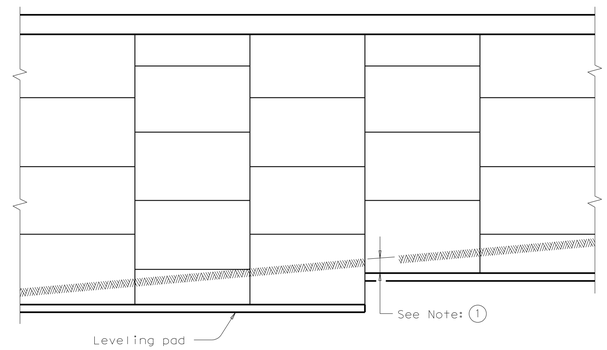

ELEVATION

1 NOTE: Unless noted elsewhere in the plans, 1′ minimum cover shall be provided from the top of leveling pad to finish grade.

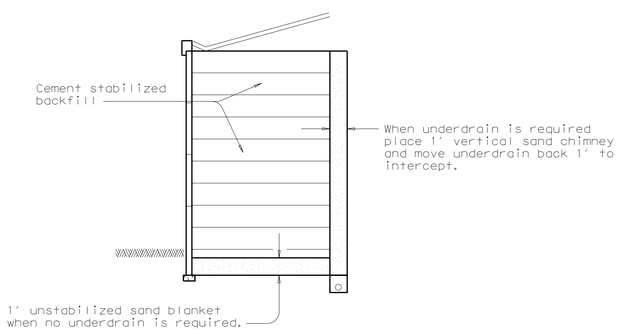

SPECIAL DRAINAGE PROVISIONS

(For use when cement stabilized backfill is used)

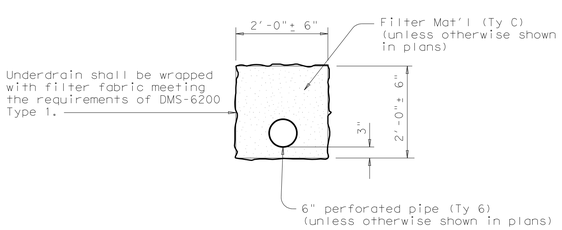

UNDERDRAIN DETAIL

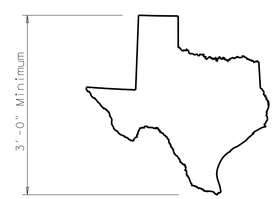

MAP OF TEXAS EMBLEM

Map of Texas emblem shall be formed into a wall panel next to each bridge abutment. The exact location of each emblem shall be approved by the Engineer. The cost of forming the emblems will not be paid for directly, but shall be incidental to the Item "Retaining Wall".

The map of Texas shall be inset a minimum of ¾" into the face of the panel, and shall receive a smooth finish. The inset area shall be finished in a contrasting color as approved by the Engineer.

DESIGN PARAMETERS:

Design of retaining walls shall be based on the following design parameters:

Random Backfill (Embankment of Existing Soils)	unit weight = 125 pcf Ø = 30° c = 0 psf
Select Backfill	unit weight = 125 pcf Ø = 34° c = 0 psf
Cement Stabilized Select Backfill	unit weight = 125 pcf Ø = 45° c = 0 psf

Stress in steel and concrete shall be in accordance with current AASHTO Standard and Interim Specifications.

The minimum length of earth reinforcements shall be 8′-0".

STABILITY CRITERIA:

Factor of safety in sliding along the base of the structure shall be greater than or equal to 1.5.

Factor of safety in overturning shall be greater than or equal to 2.0.

The base pressure resultant shall fall within the middle third of the retaining wall.

The factor of safety against pullout of the earth reinforcements shall be greater than or equal to 1.5 at each level. Pullout resistance shall be determined from test data evaluated at ¾ inch strain.

CORROSION CRITERIA:

The earth reinforcement elements shall be designed to have a corrosion resistance - durability to ensure a minimum design life of 75 years. Maximum loss per side due to corrosion shall be computed by assuming a uniform loss model based on the following

Zinc corrosion rate (First 2 years) - 15 µm/yr.
Zinc corrosion rate (subsequent years) - 4 µm/yr.
Carbon steel corrosion rate - 12 µm/yr.

All stress and pullout calculations shall be done on the calculated earth reinforcement section remaining after 75 years.

GENERAL NOTES:

Section and elevation shown is for informational purposes only. Specific geometry is to be determined based on wall layouts and other plan information.

The select backfill specified for use within the mechanically stabilized earth volume shall extend horizontally from the back of the panels to the end of the earth reinforcements. The select backfill shall extend vertically from the top of the leveling pad or 4" below the lowest earth reinforcement, whichever is lower, to the top of panels.

The uppermost earth reinforcements shall be no more than 3.0′ below the top of wall.

The lowest level of earth reinforcements shall be no more than 2.0′ above the top of the leveling pad.

Minimum wire size for earth reinforcements shall be W7.0. If different longitudinal and cross wires are used in an earth reinforcement mesh, the smaller wire shall have at least 50% of the cross sectional area of the larger wire.

Standard precast concrete panels shall have a maximum height of 6′, and a maximum surface area of 50 sq ft. Minimum panel thickness shall be 5". Panels shall be arranged to provide offset horizontal joints.

An open joint shall be provided around the perimeter of the concrete panels. The nominal joint opening shall be between ⅜" and ¾". The joint configuration shall be such that the filter fabric or pad materials are not exposed at the wall face.

A one-piece corner panel shall be provided for wall angle changes of greater than 30 degrees. Butting of chamfered panels will be allowed for angle changes of 30 degrees or less.

Concrete coping shall be provided along the top of wall, at the vertical steps at bridge backwalls, and at other vertical steps along the top of wall. The joints between all coping segments shall be sealed to prevent infiltration of water into the retaining wall backfill. Sealing shall be in accordance with the Item "Joint Sealants and Fillers", using Class 4 joint sealant.

INTERNATIONAL BOUNDARY AND WATER COMMISSION
COMISIÓN INTERNACIONAL DE LIMITES Y AGUAS

S&R INFRASTRUCTURE, LTD.
Engineering Management Technology

S&B Infrastructure, Ltd. Firm Registration Number: 1582

STATE OF TEXAS
PHILLIP J. PAWELEK
82739
REGISTERED PROFESSIONAL ENGINEER

The seal appearing on this document was authorized by PHILLIP J. PAWELEK P.E. 82739, on 6-11, 2009.

Phillip J. Pawelek, P.E.

MECHANICALLY STABILIZED EARTH RETAINING WALL RW(MSE)

SHEET 1 OF 1 SHEET

STATE	COUNTY	DRAWN BY:	CHECKED BY:	
TEXAS	HIDALGO	PROJECT NO. IBM09T0018		SHEET NO.
REHABILITATION OF NORTH FLOODWAY NORTH AND SOUTH LEVEES (FM 1015 TO BASELINE RD)				15.21

N:\Project\U0450\U0450515\800*WorkingFiles\Dgn\U450515RWMSE.dgn

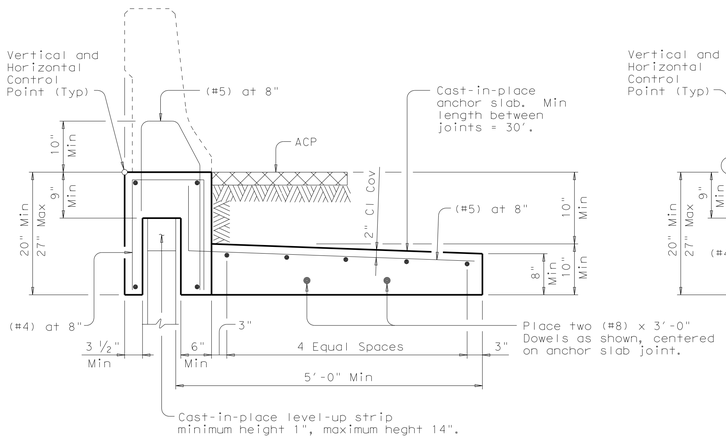

"WIDE BASED" RAILING T551, T552 & SSTR ADJACENT TO ACP

(Showing T551 Rail, other rails listed similar)

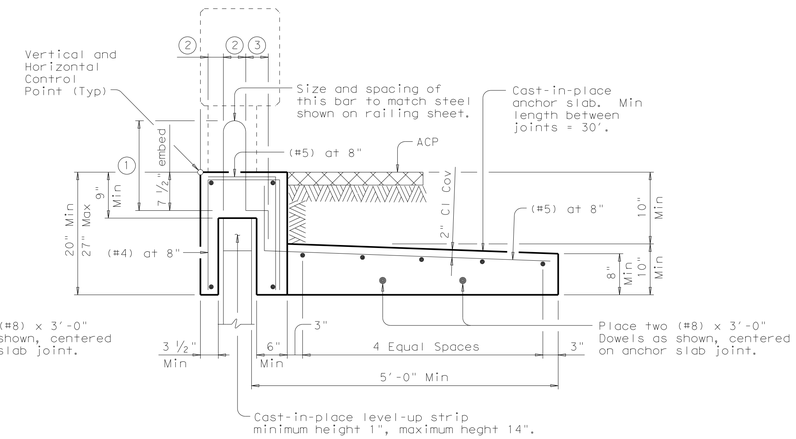

"NARROW BASED" RAILING T1F, T1W, T221, T223, T401, T402, T411, C1W, C221, C223, C402, C411 ADJACENT TO ACP

(Showing T223 Rail, other rails listed similar)

1. Reinforcement length equal to length shown on the appropriate Rail standard plus 1".
2. Match dimension on the appropriate Rail standard.
3. Match dimension on the appropriate Rail standard. Bend end of rail anchorage reinforcing as shown as required to maintain Clear Cover.

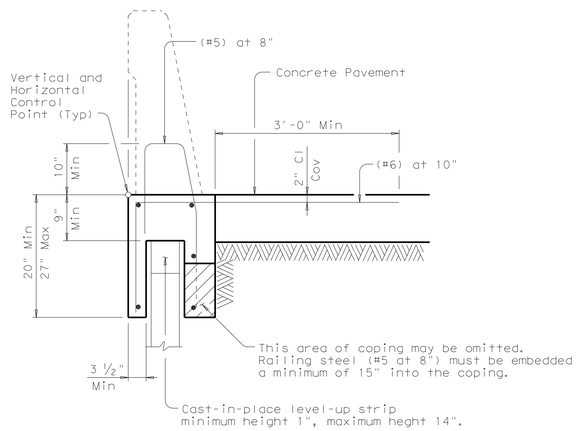

"WIDE BASED" RAILING T551, T552 & SSTR ADJACENT TO CONCRETE PAVEMENT

(Showing SSTR Rail, other rails listed similar)

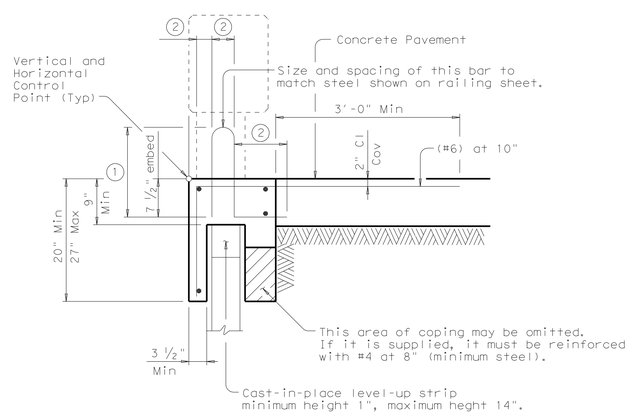

"NARROW BASED" RAILING T1F, T1W, T221, T223, T401, T402, T411, C1W, C221, C223, C402, C411 ADJACENT TO CONCRETE PAVEMENT

(Showing T223 Rail, other rails listed similar)

CAST-IN-PLACE COPINGS:
Casting of the coping directly against the precast panel sides will not be permitted, as this may result in panel cracking. The contractor must use a ½"(Min) compressible material on both sides of the panel to isolate the coping from the precast panel.
When cast-in-place coping is anchored to reinforced concrete pavement, a smooth level-up strip must be provided on the top of the precast panels. The purpose of the level-up is to allow the pavement and coping to move longitudinally relative to the wall without causing damage.
Railing and coping joints must be provided at 33' maximum spacing. Railing and coping joints must be placed to coincide with precast panel joints.

PRECAST COPINGS:
A smooth level-up strip must be provided on top of the precast panels prior to installation of the coping. Shims may be used on top of the level-up strip to facilitate alignment.
Precast coping must be provided in 10' minimum lengths.

JOINTED CONCRETE PAVEMENT:
When coping is adjacent to and anchored into jointed concrete pavement, the coping joints must coincide with the pavement joints.

JOINT SEALER:
The joints between coping segments must be sealed in accordance with the Item "Joint Sealants and Fillers", joint sealing material, Class 4. The joint must be sealed 3" below and 6" above the adjoining pavement surface, or as directed by the Engineer. The purpose of the joint sealing is to contain surface drainage and prevent infiltration into the retaining wall backfill.

GENERAL NOTES:

Details on this sheet are to be used in development of specific details for mounting traffic railing on mechanically stabilized earth (MSE) walls.
The specific details proposed must have strengths equivalent to those shown on this sheet. Areas of particular importance are the connection of the coping to the railing, the strength of the vertical coping leg connecting the railing to the anchor slab, and the connection of the coping to the anchor slab or concrete pavement.
Shop drawings for the traffic railing foundations must be submitted to the Engineer in accordance with the Item "Retaining Wall". The shop drawings must include bar bending details.
Precasting of the coping or coping and railing will be allowed. The anchor slab, when required, must be cast-in-place.
The Contractor's attention is directed to the fact that various configurations of precast coping/railing combinations are covered by patent. The contractor must provide for use of these systems in accordance with Article 7.3.
Concrete must be Class "C".
All reinforcing steel must be Grade 60.
Longitudinal bars must be (#4), unless otherwise shown.
Coping and anchor slabs must be considered subsidiary to the Item "Retaining Wall". The traffic railing will be paid for by the linear foot for the appropriate railing type.

S&B INFRASTRUCTURE, LTD.
Engineering Management Technology
S&B Infrastructure, Ltd. Firm Registration Number: 1582

STATE OF TEXAS
PHILLIP J. PAWELEK
82739
REGISTERED PROFESSIONAL ENGINEER

The seal appearing on this document was authorized by PHILLIP J. PAWELEK P.E. 82739, on 6-11, 2009

Phillip J. Pawelek, P.E.

RETAINING WALL
TRAFFIC RAILING
FOUNDATIONS
RW(TRF)

SHEET 1 OF 1 SHEET

STATE	COUNTY	DRAWN BY:	CHECKED BY:	
TEXAS	HIDALGO	PROJECT NO.	IBM09T0018	SHEET NO.
REHABILITATION OF NORTH FLOODWAY NORTH AND SOUTH LEVEES (FM 1015 TO BASELINE RD)				15.22

m:\projects\u0450\u045051\800\workingfiles\dgn\045051SRWTRF.dgn

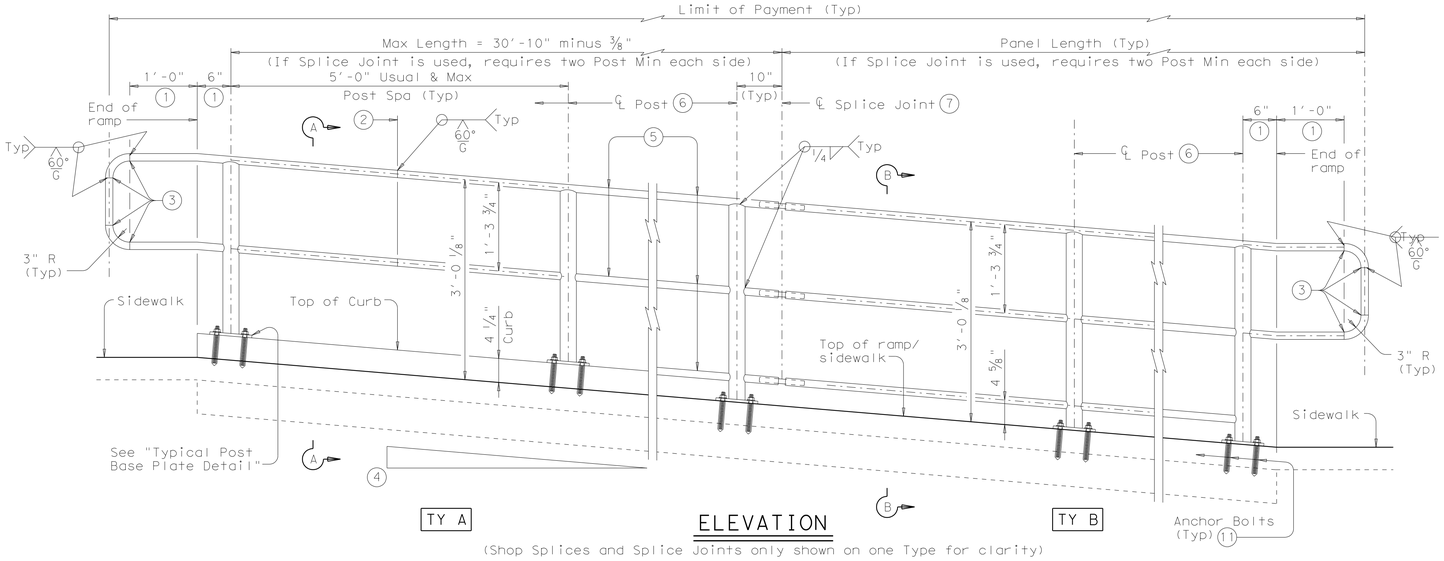

ELEVATION

(Shop Splices and Splice Joints only shown on one Type for clarity)

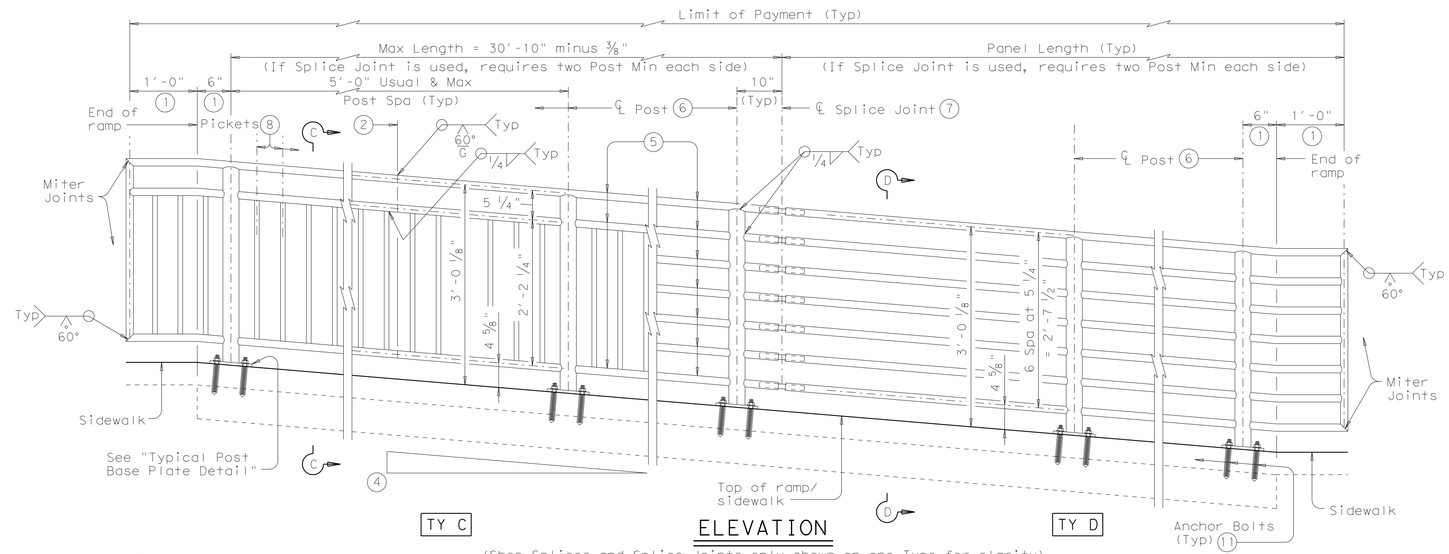

ELEVATION

(Shop Splices and Splice Joints only shown on one Type for clarity)

RECOMMENDED USAGE (9)(10)	
Dropoff Height/ Condition	Recommended Rail Options
< 30" dropoff	TY A, TY B, TY C, or TY D
≥ 30" dropoff, or along Bike Path	TY E or TY F

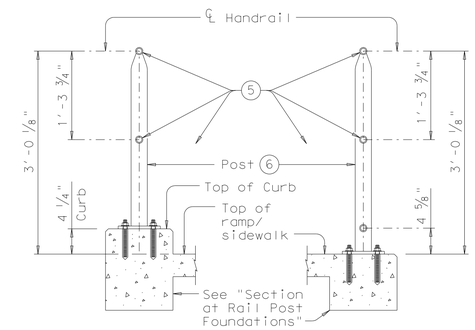

SECTION A-A

(Showing Handrail Ty A)

SECTION B-B

(Showing Handrail Ty B)

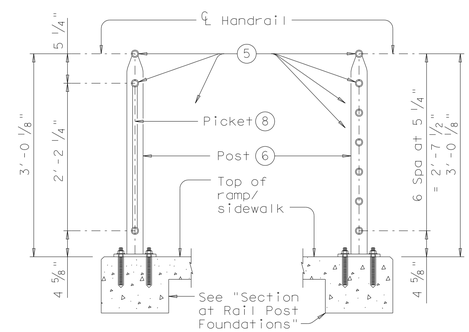

SECTION C-C

(Showing Handrail Ty C)

SECTION D-D

(Showing Handrail Ty D)

(1) Parallel to ground.

(2) One shop splice per panel is permitted with minimum 85 percent penetration. The weld may be square groove or single vee groove. Grind smooth.

(3) Shop splice is permitted with minimum 85 percent penetration. The weld may be square groove or single vee groove. Grind smooth.

(4) See Ramp Details located elsewhere in plans for ramp slope and dimensions. Maximum ramp slope will not exceed 8.3 percent. Level landing required for each 30" rise if grade exceeds 5 percent.

(5) 1" Dia Extra Heavy Pipe (1.315" O.D., 0.179" wall thickness). Parallel to ramp/sidewalk. Provide holes as needed in 1" Dia pipe for galvanizing drainage and venting.

(6) 2 ½" Dia Standard Pipe (2.875" O.D., 0.203" wall thickness). Plumb all posts. See "Post Mount Detail" for crimping and trimming post to fit Dia of top rail. Provide holes as needed in post for galvanizing drainage and venting.

(7) See "Handrail Fabrication Details" for Splice Joints.

(8) ℄ ⅝" Dia Round Bar Eq Spa at 4 ½" Max. Plumb all pickets.

(9) When needed for accessibility (grade > 5 percent) or as needed for pedestrian safety.

(10) Not to be used on bridges.

(11) See "General Notes" for anchor bolt information.

S&B INFRASTRUCTURE, LTD.

Engineering Management Technology

S&B Infrastructure, Ltd. Firm Registration Number: 1582

STATE OF TEXAS
PHILLIP J. PAWELEK
82739
REGISTERED PROFESSIONAL ENGINEER

The seal appearing on this document was authorized by PHILLIP J. PAWELEK P.E. 82739, on 6-11, 2009.

Phillip J. Pawelek, P.E.

PEDESTRIAN HANDRAIL DETAILS PRD-06

SHEET 1 OF 3 SHEET

STATE	COUNTY	DRAWN BY:	CHECKED BY:	
TEXAS	HIDALGO	PROJECT NO.	IBM09T0018	SHEET NO.
REHABILITATION OF NORTH FLOODWAY NORTH AND SOUTH LEVEES (FM 1015 TO BASELINE RD)				15.23

N:\Project\u0450\U0450515\800-WorkingFiles\Dgn\0450515PRD.dgn

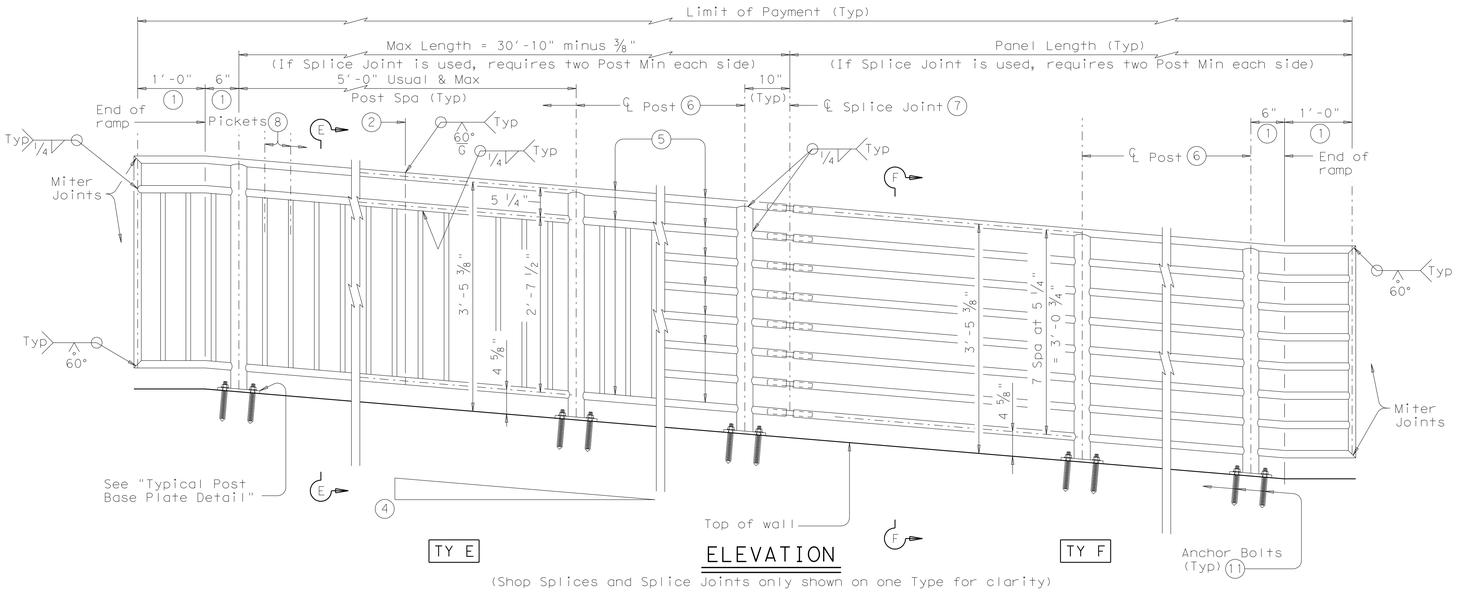

ELEVATION

(Shop Splices and Splice Joints only shown on one Type for clarity)

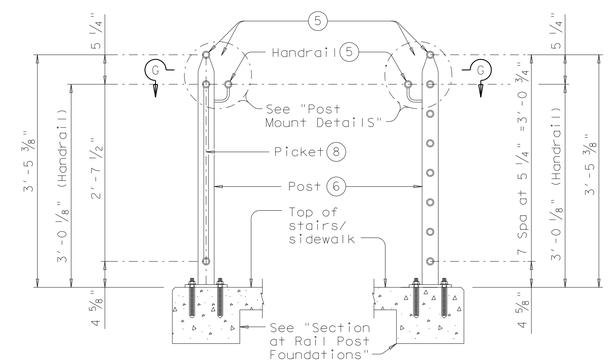

SECTION E-E

(Showing Handrail Ty E)

SECTION F-F

(Showing Handrail Ty F)

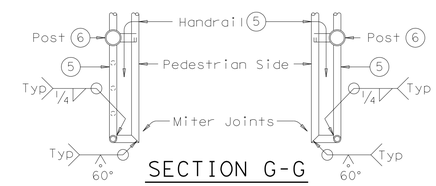

SECTION G-G

(Showing Handrail Termination)

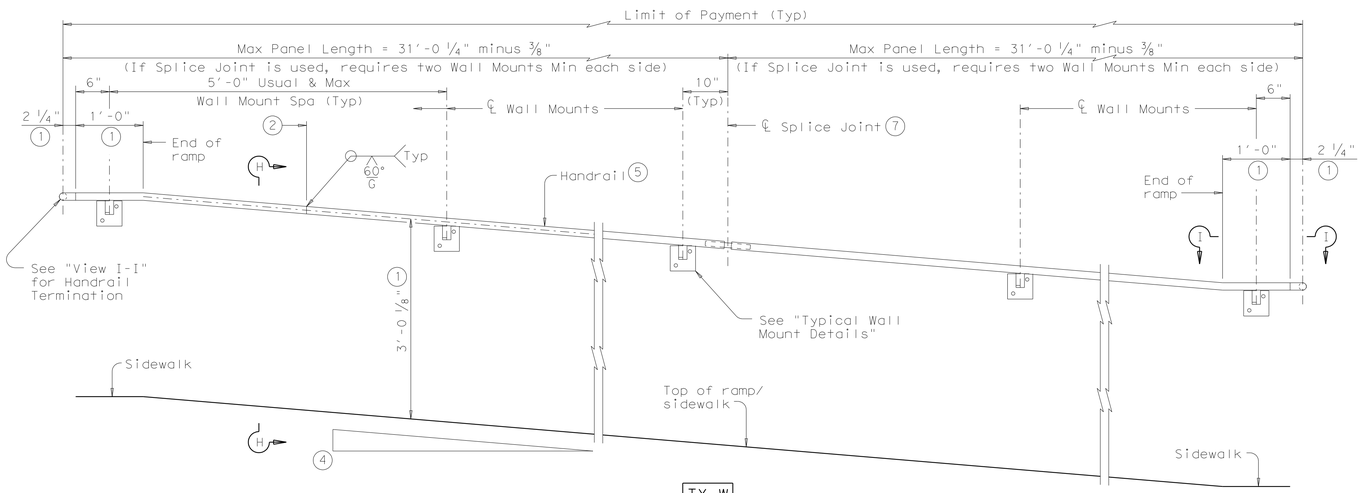

TY W

ELEVATION

1. Parallel to ground.
2. One shop splice per panel is permitted with minimum 85 percent penetration. The weld may be square groove or single vee groove. Grind smooth.
3. Shop splice is permitted with minimum 85 percent penetration. The weld may be square groove or single vee groove. Grind smooth.
4. See Ramp Details located elsewhere in plans for ramp slope and dimensions. Maximum ramp slope will not exceed 8.3 percent. Level landing required for each 30" rise if grade exceeds 5 percent.
5. 1" Dia Extra Heavy Pipe (1.315" O.D., 0.179" wall thickness). Parallel to ramp/sidewalk. Provide holes as needed in 1" Dia pipe for galvanizing drainage and venting.
6. 2 1/2" Dia Standard Pipe (2.875" O.D., 0.203" wall thickness). Plumb all posts. See "Post Mount Detail" for crimping and trimming post to fit Dia of top rail. Provide holes as needed in post for galvanizing drainage and venting.
7. See "Handrail Fabrication Details" for Splice Joints.
8. ℄ 5/8" Dia Round Bar Eq Spa at 4 1/2" Max. Plumb all pickets.
11. See "General Notes" for anchor bolt information.

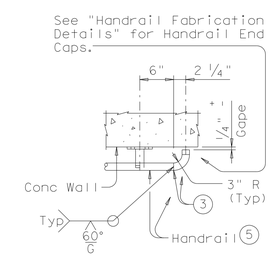

VIEW I-I

(Showing Handrail Termination)

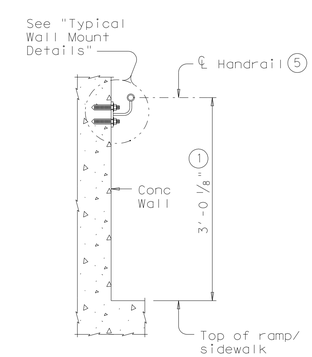

SECTION H-H

(Showing Handrail Ty W)

S&B INFRASTRUCTURE, LTD.
Engineering Management Technology

S&B Infrastructure, Ltd. Firm Registration Number: 1582

STATE OF TEXAS
PHILLIP J. PAWELEK
82739
REGISTERED PROFESSIONAL ENGINEER

The seal appearing on this document was authorized by PHILLIP J. PAWELEK P.E. 82739, on 6-11, 2009

Phillip J. Pawelek, P.E.

PEDESTRIAN HANDRAIL DETAILS PRD-06

SHEET 2 OF 3 SHEET

STATE	COUNTY	DRAWN BY:	CHECKED BY:	
TEXAS	HIDALGO	PROJECT NO.	IBM09T0018	SHEET NO.
REHABILITATION OF NORTH FLOODWAY NORTH AND SOUTH LEVEES (FM 1015 TO BASELINE RD)				15.24

N:\Project\U0450\U045015\800\WorkingFiles\Dgn\045015PRD.dgn

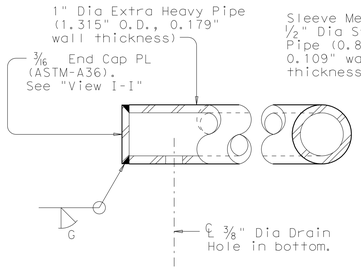

AT TYPE W HANDRAIL END CAPS

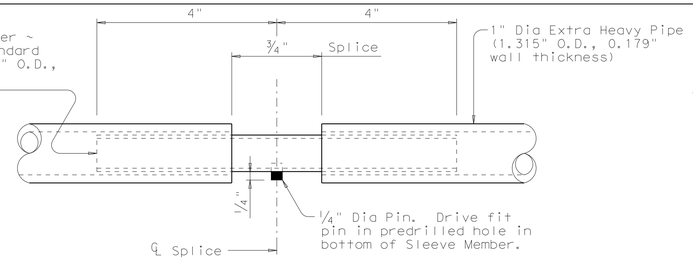

AT SPLICE JOINTS

HANDRAIL FABRICATION DETAILS

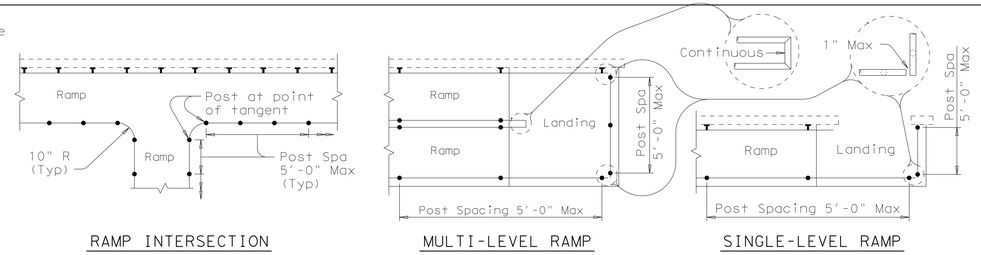

RAMP INTERSECTION

MULTI-LEVEL RAMP

SINGLE-LEVEL RAMP

PLAN SHOWING RAIL AT RAMP CONDITIONS

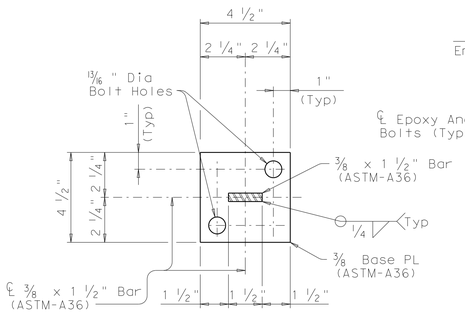

SECTION J-J

(Anchor Bolts not shown for clarity)

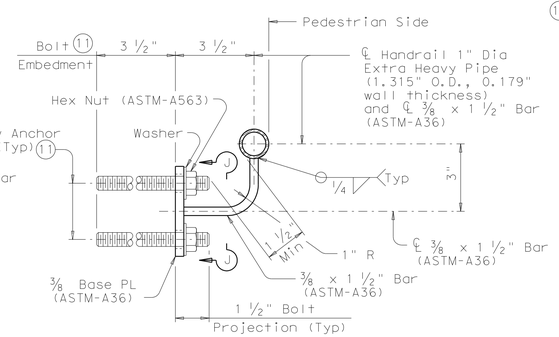

SECTION AT WALL MOUNT

TYPICAL WALL MOUNT DETAILS

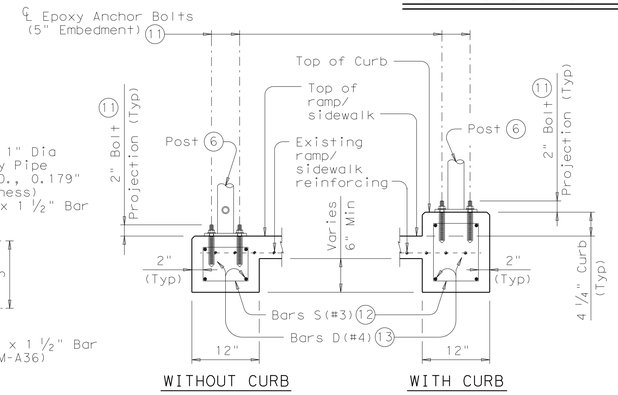

WITHOUT CURB

WITH CURB

SECTION AT RAIL POST FOUNDATIONS

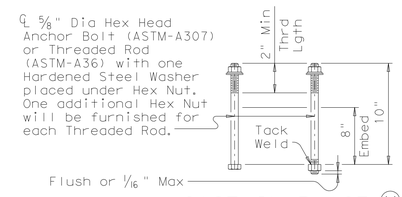

CAST-IN-PLACE (11) ANCHOR BOLT OPTIONS

(Used for Post Base Plate only)

(5) 1" Dia Extra Heavy Pipe (1.315" O.D., 0.179" wall thickness). Parallel to ramp/sidewalk. Provide holes as needed in 1" Dia pipe for galvanizing drainage and venting.

(6) 2 1/2" Dia Standard Pipe (2.875" O.D., 0.203" wall thickness). Plumb all posts. See "Post Mount Detail" for crimping and trimming post to fit Dia of top rail. Provide holes as needed in post for galvanizing drainage and venting.

(11) See "General Notes" for anchor bolt information.

(12) Bars S(#3) spaced at 12" Max (Spaced 3" from outside edge of overall length of Ramp/Sidewalk).

(13) Provide 1 1/2" end cover to Bars D(#4) from outside edge of overall length of Ramp/Sidewalk.

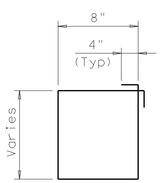

BARS S (#3)

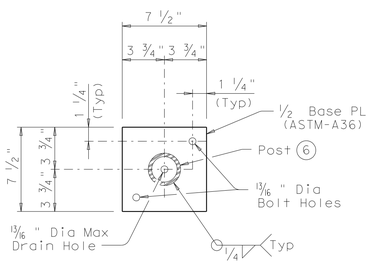

TYPICAL POST BASE PLATE DETAIL

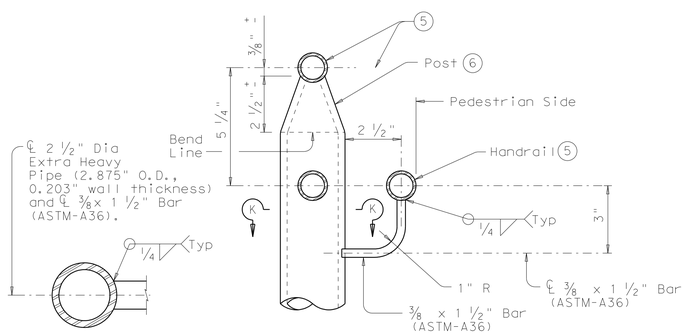

SECTION K-K

ELEVATION

POST MOUNT DETAILS

GENERAL NOTES:

Designed according to ADAAG, Texas Accessibility Standards, Uniform Building Code, and AASHTO LRFD Specifications.

Handrail anchorage details shown on this standard may require modification for select structure types. See appropriate details elsewhere in plans for these modifications.

Pipe will conform to ASTM-A53 Grade B, A500 Grade B or A501. Steel plates and steel bars will conform to ASTM-A36.

Galvanize all steel components except reinforcing steel unless noted otherwise.

Concrete for foundations will be in accordance with Item 531 "Sidewalks".

All reinforcing steel must be Grade 60.

Bar laps, where required, will be as follows:

Uncoated ~ #4 = 1'-5"

Epoxy coated ~ #4 = 2'-1"

When the plans require painted steel, follow the requirements for painting galvanized steel in Item 446, "Cleaning and Painting Steel". Sleeve Members will receive galvanization and only get field painted after installation unless directed otherwise by Engineer.

Epoxy Anchor bolts for wall mount and post base plate will be 5/8" Dia ASTM A36 threaded rods with one hex nut and one hardened steel washer at each bolt. 5/8" Dia threaded rod embedment depth for wall mounts is 3 1/2" and embedment depth for post base plate is 5". Embed threaded rods into concrete with a Type III (Class C) epoxy meeting the requirements of DMS-6100, "Epoxies and Adhesives". Mix and dispense adhesive with the manufacturer's static mixing nozzle/dual cartridge system. Core drill holes (percussion drilling not permitted).

At the contractor's option the post base plate anchor bolts may be cast with the Ramp/Sidewalk (See Cast-in-Place Anchor Bolt Options).

Optional cast-in-place anchor bolts will be 5/8" Dia ASTM A307 Grade A bolts (or A36 threaded rods with one tack welded hex nut each) with one hex nut and one hardened steel washer at each bolt. Embedment depth of cast-in-place bolt will be 8" for post base plate.

Handrails and any wall or other surface adjacent to them will be free of any sharp or abrasive elements.

Submit shop drawings to the Engineer unless otherwise noted.

For curved handrail applications, fabricate the handrail to the curve if radius is less than 600 ft. Shop drawings are required when rail is fabricated to the curve.

For all handrails, erection drawings will be submitted to the Engineer for approval to ensure proper installation. Drawings will show handrail mount locations with bolts setting, spacing, ramp slope, and/or splice joint locations, and handrail lengths with identification showing where each handrail goes on the layout.

Payment for concrete sidewalks or curb ramps will be paid for in accordance with Item 531 "Sidewalks".

Payment for all items shown is to be included in unit price bid in accordance with Item 450 "Railing" of the type specified.

All exposed edges will be rounded or chamfered to approximately 1/8" by grinding.

INTERNATIONAL BOUNDARY AND WATER COMMISSION · COMISION INTERNACIONAL DE LIMITES Y AGUAS · MEXICO · USA

S&B INFRASTRUCTURE, LTD.

Engineering Management Technology

S&B Infrastructure, Ltd. Firm Registration Number: 1582

STATE OF TEXAS · PHILLIP J. PAWELEK · 82739 · REGISTERED PROFESSIONAL ENGINEER

The seal appearing on this document was authorized by PHILLIP J. PAWELEK P.E. 82739, on 6-11, 2009

Phillip J. Pawelek, P.E.

PEDESTRIAN HANDRAIL DETAILS PRD-06

SHEET 3 OF 3 SHEET

STATE	COUNTY	DRAWN BY:	CHECKED BY:	
TEXAS	HIDALGO	PROJECT NO.	IBM09T0018	SHEET NO.
REHABILITATION OF NORTH FLOODWAY NORTH AND SOUTH LEVEES (FM 1015 TO BASELINE RD)				15.25

N:\Project\u0450\U045051\800WorkingFiles\Dgn\U045051PRD.dgn

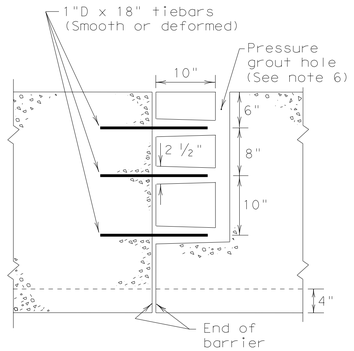

SECTION THROUGH ℄ AT JOINT
MALE-FEMALE DESIGN OPTION

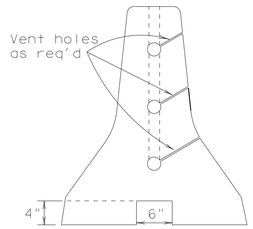

END VIEW
MALE-FEMALE DESIGN OPTION

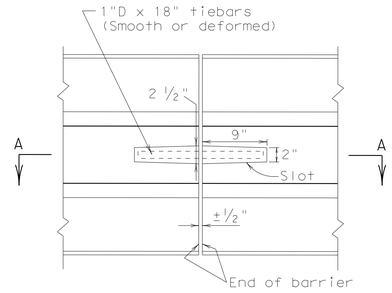

PLAN
SLOTTED DESIGN OPTION

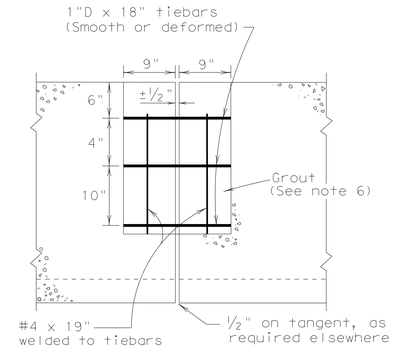

SECTION A-A (THROUGH ℄ AT JOINT)
SLOTTED DESIGN OPTION

JOINT TYPE A

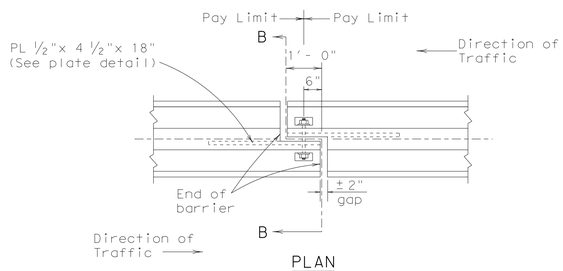

PLAN
END DETAIL

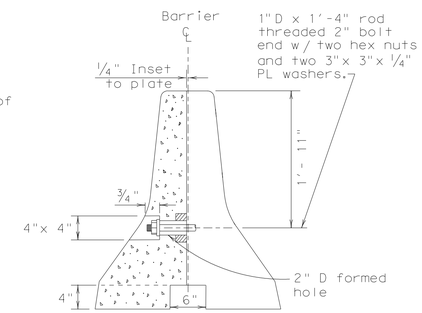

SECTION B-B

JOINT TYPE B

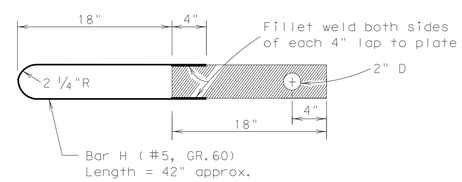

PLATE DETAIL

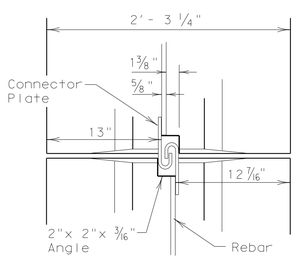

J-J HOOKS DETAIL

Note: J-J Hooks is a proprietary barrier connection system. This system can be used as an alternate bid item to a different joint type. If this connection system is exclusively specified in the plans, prior approval for sole source use must be obtained.

Details of components for the J-J Hooks connection and reinforcing details will be shown on the manufacturer's shop drawings furnished to the Engineer.

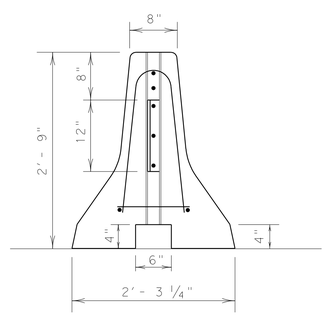

END VIEW

JOINT TYPE J

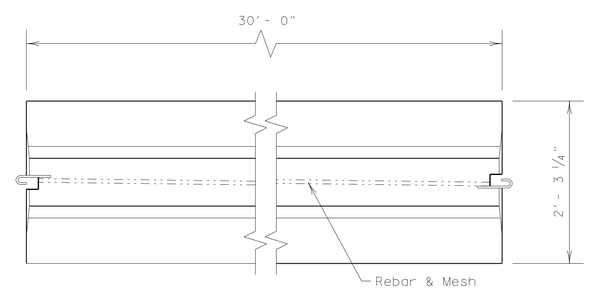

TOP VIEW
PRECAST (CTB) WITH J-J HOOKS

R = Radius
D = Diameter

GENERAL NOTES

1. Where illumination is to be placed on concrete traffic barrier, a 10 ft. cast-in-place section shall be provided at each light pole location as shown on sheet CTBI(3). Pole, anchor bolt, and other illumination details are shown on sheet CTBI(4).
2. Concrete shall be class C or H.
3. Plates shall conform to ASTM A36 steel.
4. Mesh for joint Type J barrier shall conform to ASTM A185.
5. Regardless of the method of handling, barrier section lifting points shall be 6 ¼ feet from the ends of the barrier. Lifting devices and attachments to barrier sections shall be as approved by the Engineer.
6. For joint Type A barrier that is installed in a temporary location, tiebars should be placed in the slot when the slot design option is used or, for the male-female design option, the male-female connections should be mated. For joint Type A, neither of the optional joint designs should be grouted for temporary locations of barrier.
7. When installed in a permanent roadway location, end connections of the joint Type A barrier shall be grouted with a mixture of two parts sand and one part cement with enough water to make the mixture plastic. Grouting shall be done in a manner that will assure a smooth surface at the joint.
8. Surface finishing and grouting (where required) shall be considered subsidiary to the various bid items involved.
9. All steel fittings for joint Type B and Type J barrier shall be galvanized after fabrication in accordance with ASTM 123.
10. Barrier length shall be 30 feet ± 4 inches unless specified elsewhere in the plans.
11. Forms shall be constructed of steel. Edges of barrier shall be rounded or chamfered as shown on sheet PCTB(2).
12. The contractor has the option of placing precast (joint Type A, B or J) or cast-in-place Type 2 Concrete Traffic Barrier as shown on sheet CTB(2) unless otherwise shown in the plans.

NOTE:
BARRIER FROM EXISTING STOCKPILES THAT SUBSTANTIALLY MEETS THE REQUIREMENTS SHOWN ON THIS SHEET MAY BE USED ON THIS PROJECT.

NEW BARRIER SHALL NOT BE CAST ACCORDING TO THE DETAILS SHOWN ON THIS SHEET.

S&B INFRASTRUCTURE, LTD.
Engineering Management Technology
S&B Infrastructure, Ltd. Firm Registration Number: 1582

STATE OF TEXAS
PHILLIP J. PAWELEK
82739
REGISTERED PROFESSIONAL ENGINEER

The seal appearing on this document was authorized by PHILLIP J. PAWELEK P.E. 82739, on 6-11, 2009.

Phillip J. Pawelek, P.E.

PRECAST CONCRETE
TRAFFIC BARRIER
TYPE 2

SHEET 1 OF 1 SHEET

STATE	COUNTY	DRAWN BY: JJL/JL	CHECKED BY: PP	
TEXAS	HIDALGO	PROJECT NO. IBM09T0018		SHEET NO.
REHABILITATION OF NORTH FLOODWAY NORTH AND SOUTH LEVEES (FM 1015 TO BASELINE RD)				15.26

N:\Project\U0450\U045051S\800-WorkingFiles\Dgn\045051SPCTB104.dgn

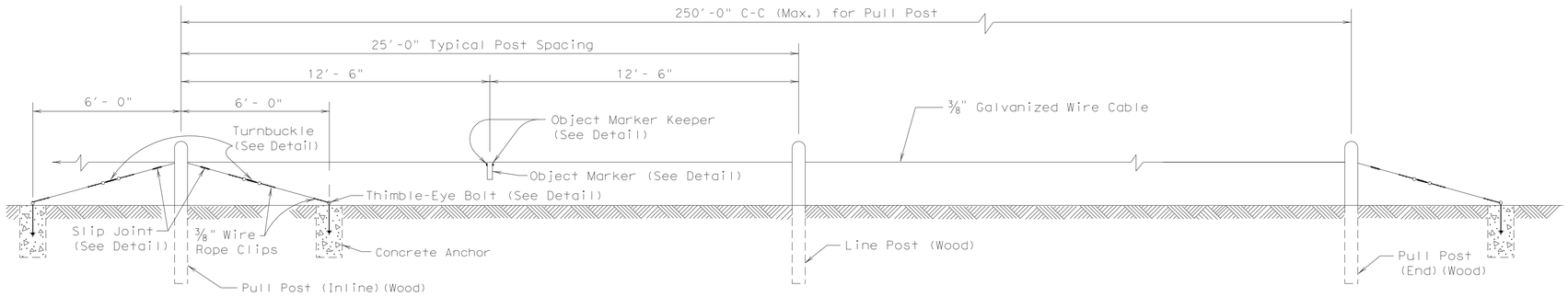

WOOD POST & CABLE UNIT

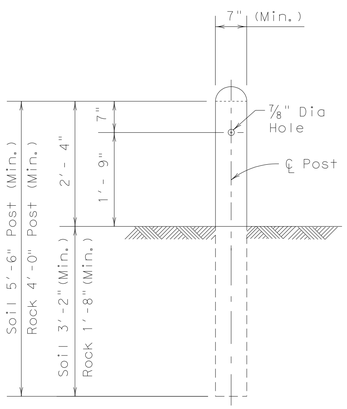

WOOD POST DETAIL

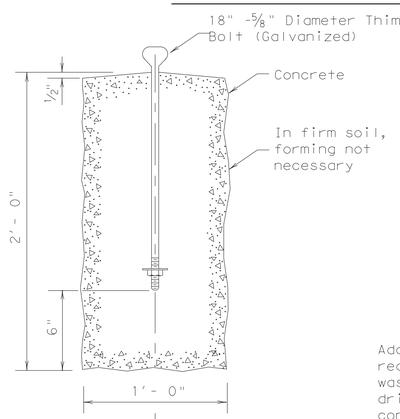

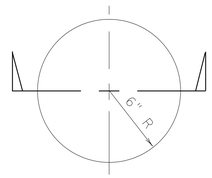

CONCRETE ANCHOR DETAILS

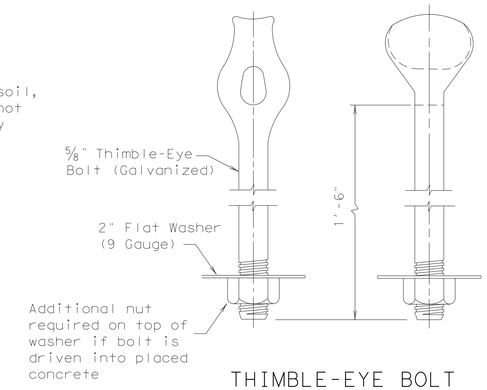

THIMBLE-EYE BOLT DETAILS

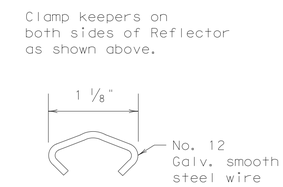

OBJECT MARKER KEEPER DETAIL

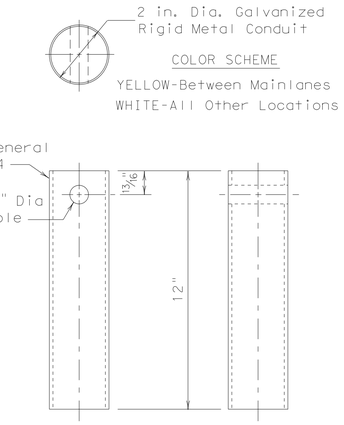

OBJECT MARKER (Reflector Detail)

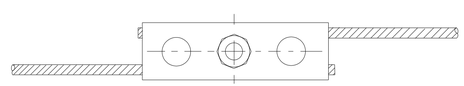

TOP VIEW

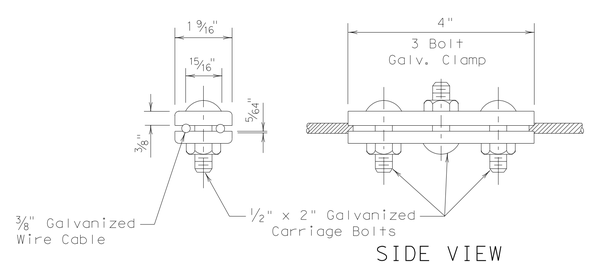

SIDE VIEW

SLIP JOINT DETAIL

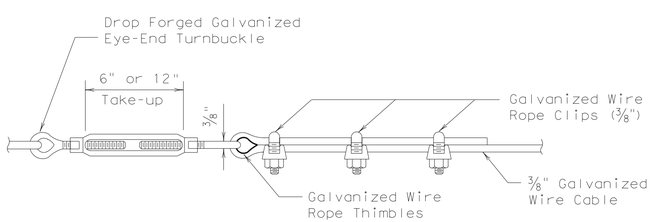

WIRE CABLE CONNECTION (at turnbuckles & eyebolts) DETAIL

GENERAL NOTES

1. Furnish Class "B" or better concrete in accordance with Item 421, "Hydraulic Cement Concrete". Cure concrete anchors at least five (5) days before attaching the cable.
2. Furnish galvanized cable fittings in accordance with the Item 445, Galvanizing.
3. Furnish posts meeting the requirements of DMS 7200, "Timer Posts and Blocks for Metal Beam Guard Fence." Do not use painted timber posts.
4. Cover the entire surface of object marker (reflector) with a reflectorized sheeting material conforming to Departmental Material Specification DMS 8300, "Sign Face Materials", Type C.
5. Furnish cable conforming to ASTM designation A475.

S&B INFRASTRUCTURE, LTD.
Engineering Management Technology
S&B Infrastructure, Ltd. Firm Registration Number: 1582

STATE OF TEXAS
PHILLIP J. PAWELEK
82739
REGISTERED PROFESSIONAL ENGINEER

The seal appearing on this document was authorized by PHILLIP J. PAWELEK P.E. 82739, on 6-11, 2009.

Phillip J. Pawelek, P.E.

POST & CABLE FENCE

SHEET 1 OF 1 SHEET

STATE	COUNTY	DRAWN BY:	CHECKED BY:	
TEXAS	HIDALGO	PROJECT NO.	IBM09T0018	SHEET NO.
REHABILITATION OF NORTH FLOODWAY NORTH AND SOUTH LEVEES (FM 1015 TO BASELINE RD)				15.27

N:\Project\U0450\U045015\800\WorkingFiles\Stnds\PCF05.DGN