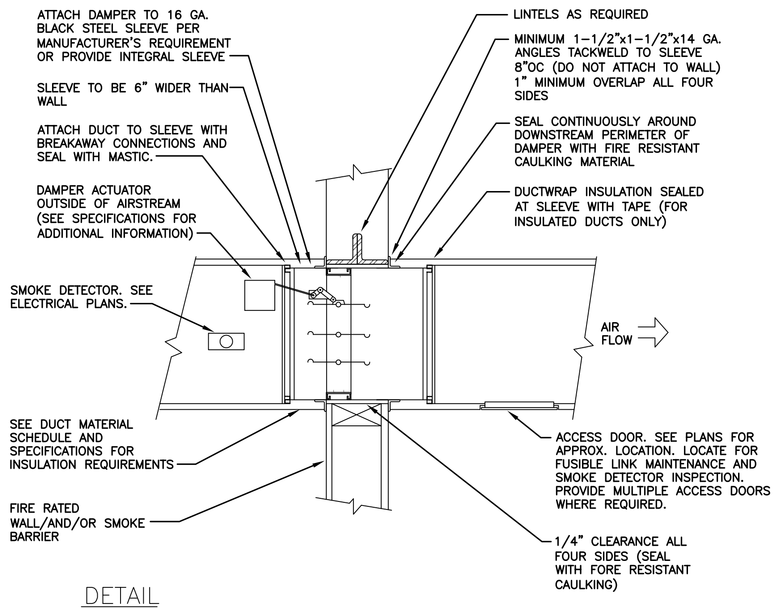

DETAIL
TYPICAL SMOKE AND FIRE DAMPER DETAIL

NTS

NOTES:

1. COMBINATION FIRE AND SMOKE DAMPERS TO BE U.L. LABELED.

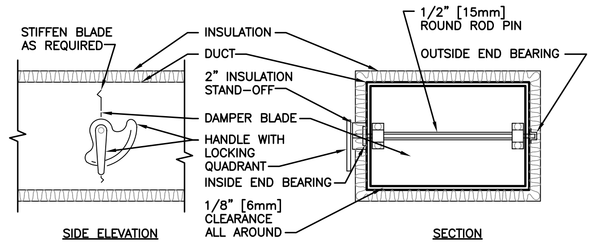

NOTE:

1. DELETE INSULATION STAND-OFF ON DUCTWORK WITHOUT EXTERIOR INSULATION.
2. DETAIL SHOWS SINGLE BLADE DAMPER. DAMPER INSTALLATION SHALL BE SIMILAR FOR MULTI-BLADE DAMPERS & ROUND DAMPERS.

VOLUME DAMPER DETAIL

NTS

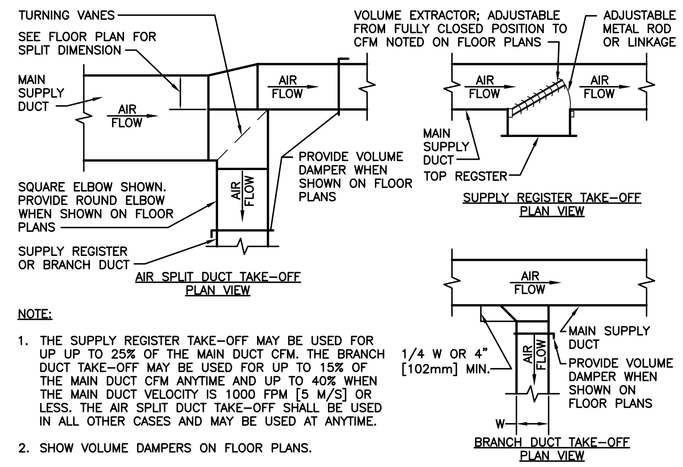

NOTE:

1. THE SUPPLY REGISTER TAKE-OFF MAY BE USED FOR UP UP TO 25% OF THE MAIN DUCT CFM. THE BRANCH DUCT TAKE-OFF MAY BE USED FOR UP TO 15% OF THE MAIN DUCT CFM ANYTIME AND UP TO 40% WHEN THE MAIN DUCT VELOCITY IS 1000 FPM [5 M/S] OR LESS. THE AIR SPLIT DUCT TAKE-OFF SHALL BE USED IN ALL OTHER CASES AND MAY BE USED AT ANYTIME.
2. SHOW VOLUME DAMPERS ON FLOOR PLANS.

SUPPLY DUCTWORK TAKE-OFFS

NTS

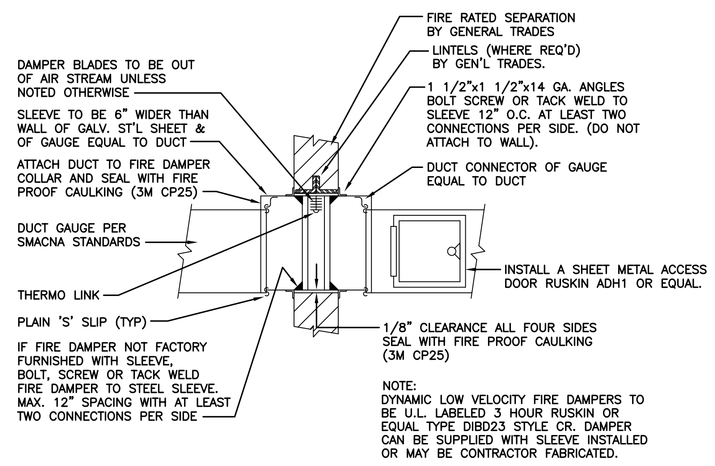

NOTE:
DYNAMIC LOW VELOCITY FIRE DAMPERS TO BE U.L. LABELED 3 HOUR RUSKIN OR EQUAL TYPE DIBD23 STYLE CR. DAMPER CAN BE SUPPLIED WITH SLEEVE INSTALLED OR MAY BE CONTRACTOR FABRICATED.

DETAIL
TYPICAL FIRE DAMPER AT WALL PENETRATION

NTS

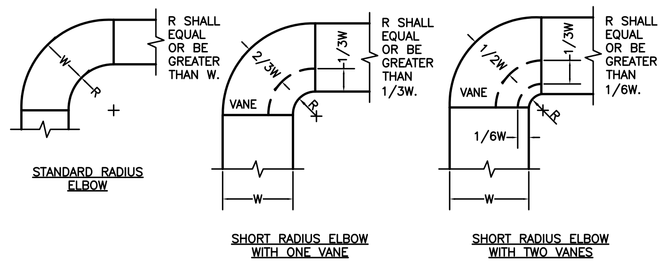

NOTE:

1. THE INTERIOR SURFACE OF ALL RADIUS ELBOWS SHALL BE MADE ROUND.
2. ALL STANDARD RADIUS ELBOWS SHOWN ON FLOOR PLANS MAY BE MADE SHORT RADIUS ELBOWS. ALL SHORT RADIUS ELBOWS SHALL HAVE VANES. VANES SHALL BE CONSTRUCTED, SUPPORTED AND FASTENED AS RECOMMENDED BY SMACNA.

DUCTWORK RADIUS ELBOWS

NTS

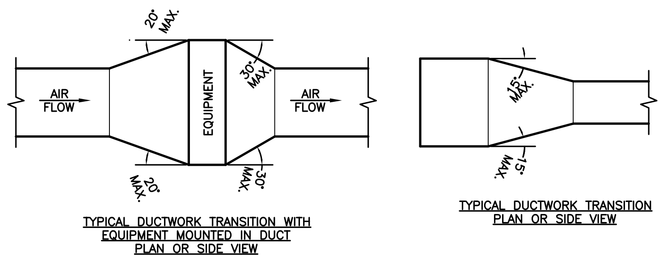

NOTE:
UNLESS OTHERWISE INDICATED ON PLANS, MAXIMUM ANGLES SHOWN SHALL APPLY.

TYPICAL DUCTWORK TRANSITION WITH EQUIPMENT MOUNTED IN DUCT

NTS

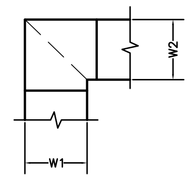

NOTE:

1. ALL VANED ELBOWS SHALL BE CONSTRUCTED AND INSTALLED AS DETAILED BY SMACNA.
2. WHEN W1 DOES NOT EQUAL W2, VANE SHALL BE SINGLE VANE TYPE REGARDLESS OF W DIMENSION.
3. ALL SINGLE VANES SHALL HAVE A 2" [50mm] RADIUS, 1 1/2" [40mm] MAXIMUM SPACE BETWEEN VANES AND A 3/4" [20mm] TRAILING EDGE.
4. WHEN W EQUALS W2 AND W1 IS GREATER THAN 20" [500mm] VANES SHALL BE DOUBLE VANE TYPE.

DUCTWORK SQUARE VANED ELBOWS

NTS

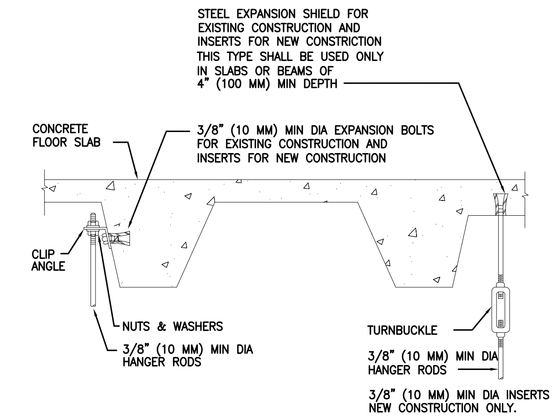

TYPICAL METHOD OF SECURING HANGER RODS IN CONCRETE SLABS AND BEAMS.

NTS

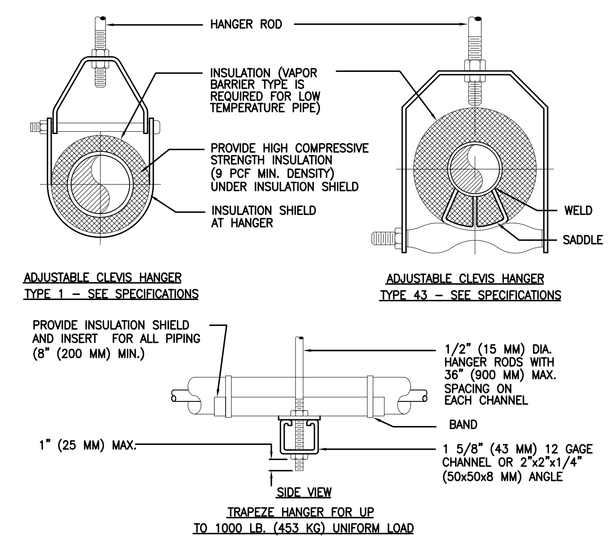

TYPICAL PIPE HANGERS

NTS

MAXIMUM PIPE/TUBING SUPPORT SPACING													
NOM. SIZE	IN. (MM)	THRU 3/4 THRU (20)	1 (25)	1 1/4 (32)	1 1/2 (40)	2 (50)	2 1/2 (65)	3 (75)	4 (100)	5 (125)	6 (150)	8 (200)
PIPE	FT. (M)	7 (2.1)	7 (2.1)	7 (2.1)	9 (2.7)	10 (3.0)	11 (3.4)	12 (3.7)	14 (4.1)	16 (4.9)	17 (5.2)	19 (5.8)
TUBING	FT. (M)	5 FT 5 FT	6 (1.8)	7 (2.1)	8 (2.4)	8 (2.4)	9 (2.7)	10 (3.0)	12 (3.7)	13 (4.0)	14 (4.1)	16 (4.9)
NOTE: FOR TRAPEZE HANGER TAKE SPACING OF SMALLEST SIZE ON TRAPEZE.												

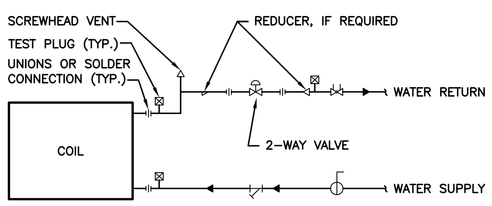

TYPICAL COIL PIPING CONNECTIONS VAV BOX REHEAT COILS

NTS

NOTES:

1. BRANCH PIPING VALVES SHALL BE PROVIDED WITH PACKING GLANDS.

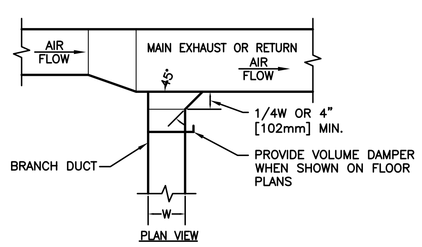

EXHAUST OR RETURN BRANCH DUCTWORK

NTS

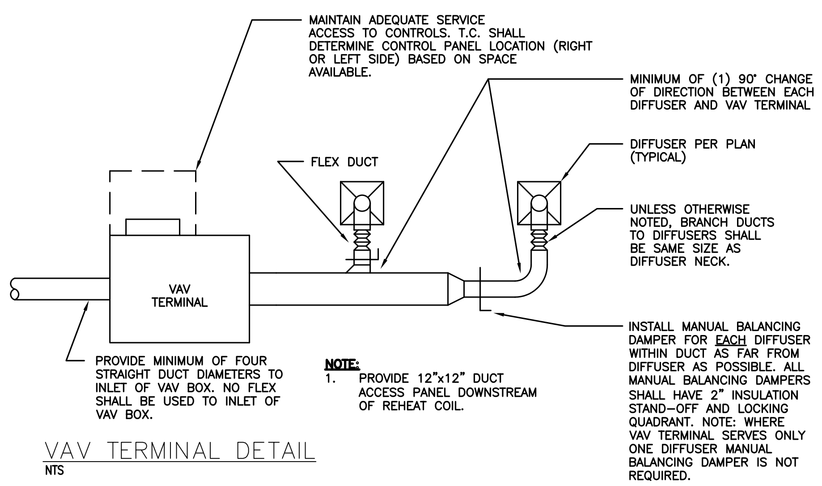

NOTE:
1. PROVIDE 12"x12" DUCT ACCESS PANEL DOWNSTREAM OF REHEAT COIL.

VAV TERMINAL DETAIL

NTS

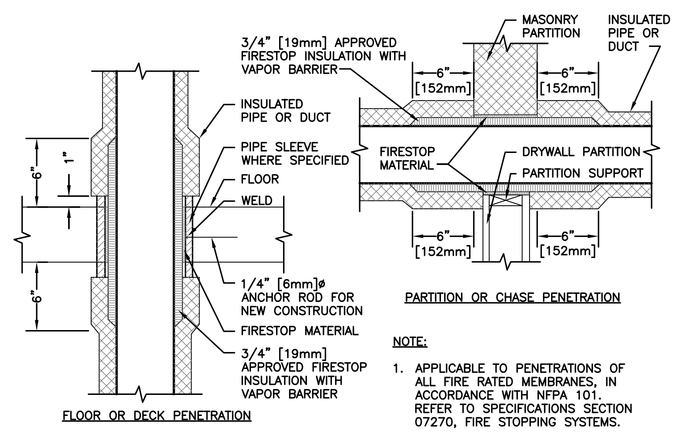

NOTE:

1. APPLICABLE TO PENETRATIONS OF ALL FIRE RATED MEMBRANES, IN ACCORDANCE WITH NFPA 101. REFER TO SPECIFICATIONS SECTION 07270, FIRE STOPPING SYSTEMS.

PIPE/DUCT PENETRATION OF FIRE/SMOKE BARRIERS

NTS

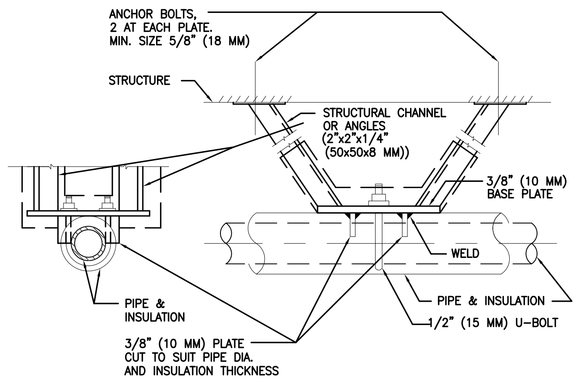

HORIZONTAL PIPE ANCHOR DETAIL

NTS

FULLY SPRINKLERED

Revisions:	Date
1 Bid Issue	05-16-08

CONSULTANTS:

FREDRICK, FREDRICK & HELLER ENGINEERS, INC.
672 EAST ROYALTON ROAD
BROADVIEW HTS., OHIO 44147
TEL. (440) 546-9696
FAX: (440) 546-9699

STATE OF OHIO — BRIAN M. WIDOWSKI E-66625 — REGISTERED PROFESSIONAL ENGINEER
07073

ARCHITECT:

Perspectus architecture
13212 Shaker Square Suite 204 Cleveland, Ohio 44120
P. 216.752.1800 F.216.752.3833

DESIGN AND CONSTRUCTION DOCUMENTS AS INSTRUMENTS OF SERVICE ARE GIVEN IN CONFIDENCE AND REMAIN THE PROPERTY OF PERSPECTUS ARCHITECTURE. THE USE OF THIS DESIGN AND THESE CONSTRUCTION DOCUMENTS ARE RESTRICTED TO THE SPECIFIC PROJECT NAMED HEREIN IS STRICTLY PROHIBITED WITHOUT THE EXPRESSED WRITTEN CONSENT OF PERSPECTUS ARCHITECTURE.

Drawing Title: **MECHANICAL DETAILS**

Approved: Project Director

Project Title: **PROSTHETICS RENOVATIONS**

Location: **VAMC - WADE PARK**

Date: 03-12-08 | Checked: **BMW** | Drawn: **LDH**

Project Number: 541-05-1071

Building Number: 1

Drawing Number: **1-H2**

Dwg. of

Office of Facilities Management

Department of Veterans Affairs

VA FORM 08-6231, OCT 1978