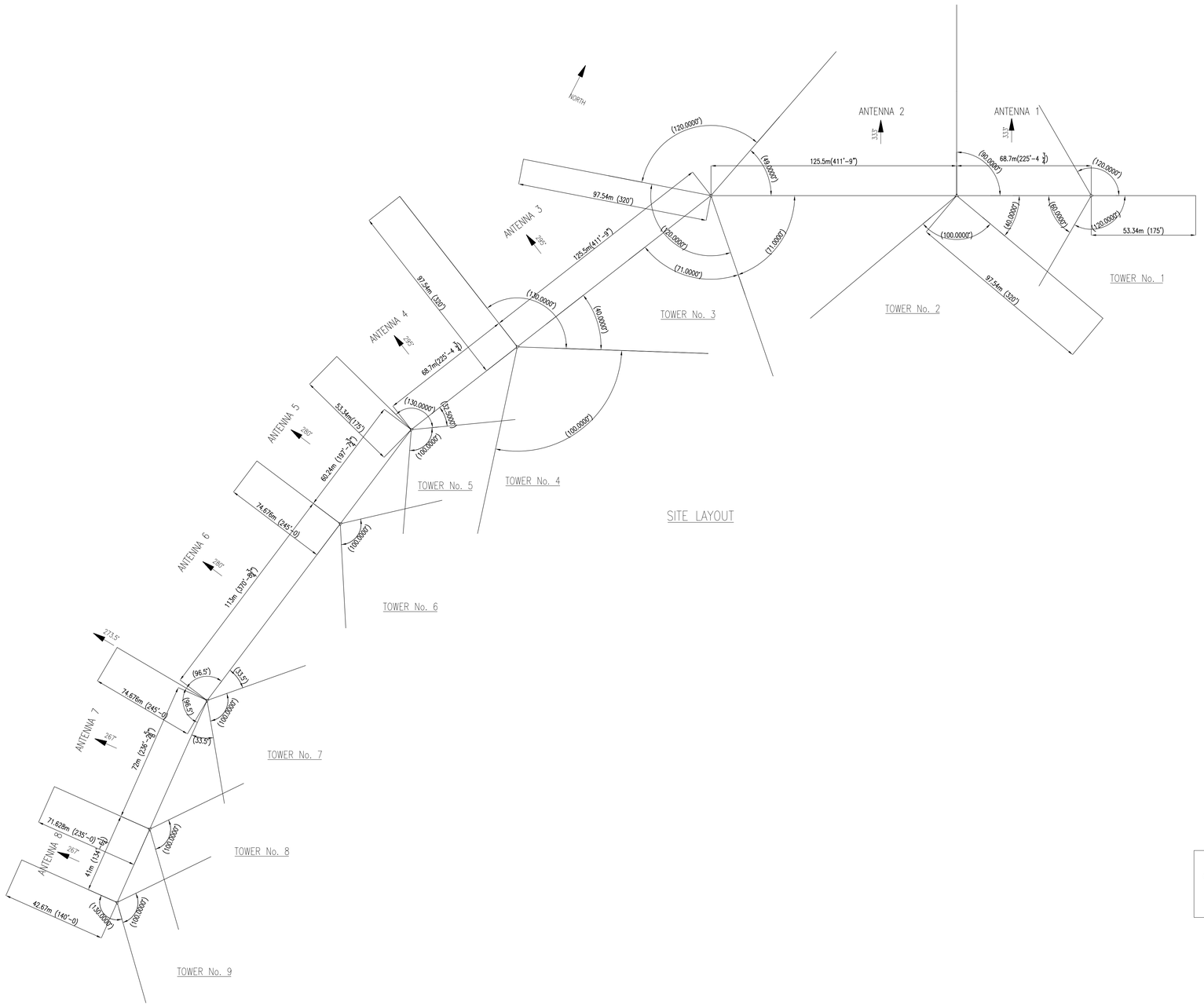

SITE LAYOUT

TOWER SPECIFICATIONS

1. ALL TOWERS ARE DESIGNED FOR A BASIC WIND SPEED AT 10m (33 FT) FOR 241 kmph (150 MPH) IN ACCORDANCE WITH ANSI/EIA/TIA-222-F, "STRUCTURAL STANDARDS FOR STEEL ANTENNA TOWERS AND ANTENNA SUPPORTING STRUCTURES", EXCEPT THE TOWER GUY LINES SHALL HAVE A MINIMUM SAFETY FACTOR OF 2.50 AS SPECIFIED IN SECTION 6.8.2.2 OF VOA'S SPECIFICATION.
2. ALL TOWER LEGS ARE SOLID ROUND BARS HAVING A MAXIMUM LENGTH OF 6.096m (20'-0) MEETING THE REQUIREMENTS OF ASTM SPECIFICATION A588 OR EQUAL WITH A MINIMUM YIELD STRENGTH OF 344,738kPa (50 ksi).
3. ALL OTHER STRUCTURAL STEEL IS ASTM A36.
4. ALL BOLTS ARE GALVANIZED A325 BOLTS WITH ANCO LOCK NUTS.
5. ALL WELDS ARE TO BE MADE BY CERTIFIED WELDERS IN ACCORDANCE WITH ANSI/AWS D1-92 STRUCTURAL WELDING CODE. TEN PERCENT OF ALL WELDS SHALL BE MAGNETIC PARTICLE TESTED, AN ADDITIONAL TEN PERCENT SHALL BE TESTED IF ANY DEFECTIVE WELDS ARE FOUND. ALL WELDS OF GUY PLATES TO THE TOWER LEGS SHALL BE FULL PENETRATION GROOVE WELDS AND SHALL BE RADIOGRAPHED.
6. ALL TOWER STEEL, INCLUDING PLATFORM AND LADDERS, SHALL BE GALVANIZED AFTER FABRICATION IN ACCORDANCE WITH ASTM SPECIFICATION A123.
7. ALL TOWER GUYS SHALL BE STRUCTURAL STRAND WITH A CLASS A COATING THAT MEETS ASTM SPECIFICATION A586 WITH FACTORY ATTACHED GALVANIZED OPEN STRAND SOCKETS AT THE TOWER END AND GALVANIZED CLOSED STRAND BRIDGE SOCKETS WITH 72 INCH TAKEUP AT THE ANCHOR END. THE STRUCTURAL STRAND SHALL BE PRESTRESSED AND THE GUY LINE ASSEMBLY (OPEN AND CLOSED SOCKETS ATTACHED) PROOF LOADED TO 50% OF THE STRUCTURAL STRAND BREAKING STRENGTH.
8. AEOLIAN VIBRATION PROTECTION SHALL BE PROVIDED FOR ALL GUY LINES. THE NUMBER AND SIZE OF DAMPERS (STOCKBRIDGE TYPE) SHALL BE DETERMINED BY THE DAMPER MANUFACTURER'S RECOMENDATIONS BASED ON THE GUY SIZE, LENGTH AND TENSION.
9. ALL SERVICE CATENARIES SHALL BE 9/16" DIAMETER GALVANIZED PRESTRESSED STRUCTURAL STRAND THAT MEETS ASTM SPECIFICATION A586. THE SERVICE CATENARIES BETWEEN TOWERS No.1 & No. 2; No. 4 & No. 5 SHALL HAVE AN INITIAL TENSION OF 895 LBS. AND A MAX. DEFLECTION OF 4.5 FT FOR A LOAD OF 1500 LBS.
   THE SERVICE CATENARIES BETWEEN TOWER No. 2 & No. 3; No. 3 & No. 4 SHALL HAVE AN INITIAL TENSION 1950 LBS. AND A MAXIMUM DEFLECTION OF 7.0 FT. FOR A LOAD OF 1500 LBS.
10. ALL STRUCTURAL STRAND SHALL HAVE A FACTORY APPLIED PROTECTIVE COATING OF PRE-LUBE 19HV, MANUFACTURED BY GRIGNARD COMPANY INC. OF PORT READING, NEW JERSEY.
11. THE HALYARD ROPES FOR THE 6-11 Mhz ANTENNAS SHALL BE 1 1/8" DIAMETER GALVANIZED 6x37 MONITOR AAA WITH IWRC HAVING A BREAKING STRENGTH OF 71.5 TONS AND 7/8" DIAMETER GALVANIZED 6x37 MONITOR AAA WITH IWRC HAVING A BREAKING STRENGTH OF 43.8 TONS FOR THE 11-21 Mhz ANTENNAS.
12. TOWER FOUNDATIONS AND GUY ANCHOR ASSEMBLIES BY OTHERS.
13. LIGHTNING PROTECTION SYSTEM FOR TOWERS AND TOWER FOUNDATIONS BY OTHERS.

AS BUILT DRAWING

REV	DESCRIPTION	DATE	APPD.
4	ORIENTATION OF GUY LINES FOR TOWER No. 7	12/20/97	
3	ADDED ANTENNAS 5,6,7 & 8	8/15/97	
2	REMOVED SPECIFICATION 14	8/12/97	
1	WAS SHEET 1 OF 7 REVISED WORDING OF SOME OF THE TOWER SPECIFICATIONS	7/19/97	

REVISION

		DATE
DRAWN	CSCD	
CHK. BY	FLA	4/30/97
ENGR.	FLA	4/30/97
ENGR. CHK.		

APPROVALS

PROJ. MANAGER _____

SYSTEMS ENGR. _____

VOICE OF AMERICA
ENGINEERING & TECHNICAL OPERATIONS
U.S. INFORMATION AGENCY
WASHINGTON, D.C. 20547

MARIANA RADIO RELAY STATION
SITE LAYOUT & TOWER SPECIFICATIONS
ISLAND OF TINIAN, COMMONWEALTH OF
THE NORTHERN MARIANA ISLANDS

PROJ. NO.	FSCM NO. 06310	DWG. NO. SK-243-AT-001
CONTR. NO.	SCALE:	SHEET 1 OF 15

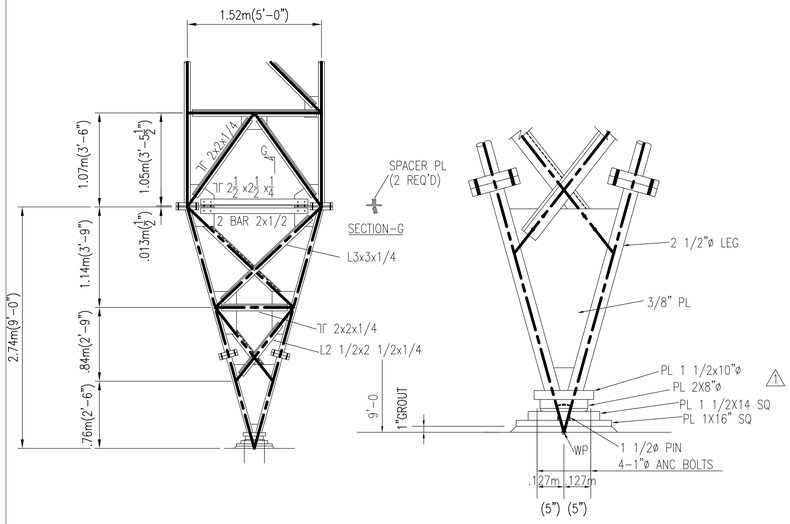

TOWER No's 9 BASE SECTION DETAIL

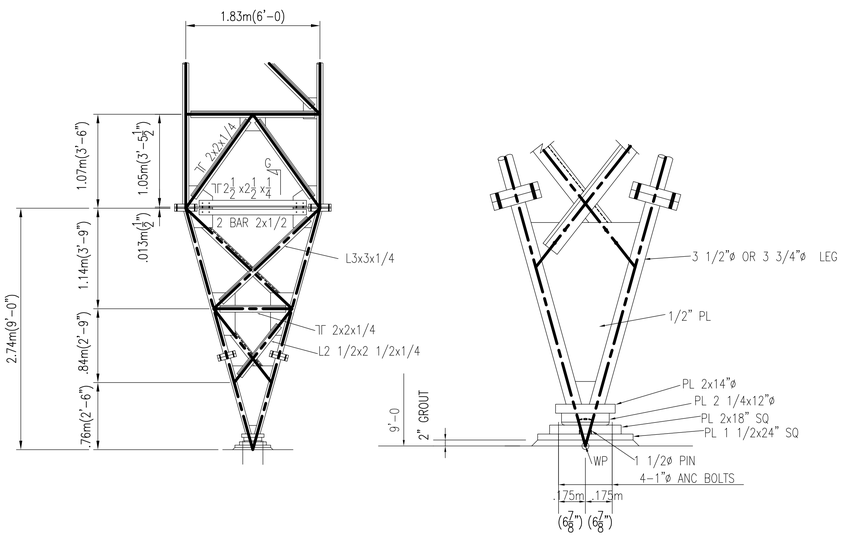

TOWER No's 6,7 & 8 BASE SECTION DETAIL

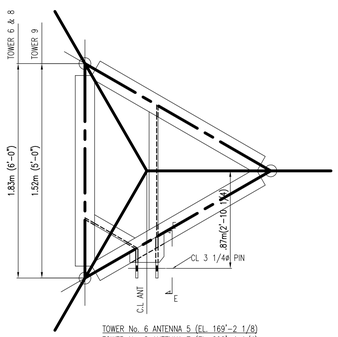

TOWER No. 6 ANTENNA 5 (EL. 169'-2 1/8)
TOWER No. 8 ANTENNA 7 (EL. 292'-4 1/4)
TOWER No. 9 ANTENNA 8 (EL. 161'-9)

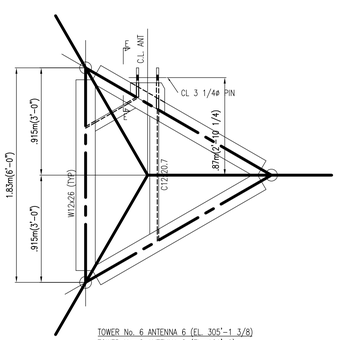

TOWER No. 6 ANTENNA 6 (EL. 305'-1 3/8)
TOWER No. 8 ANTENNA 8 (EL. 161'-9)

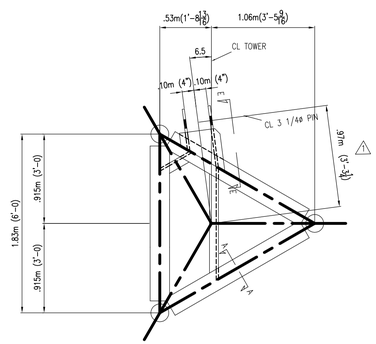

TOWER No. 7 ANTENNA 7 (EL. 296'-11)

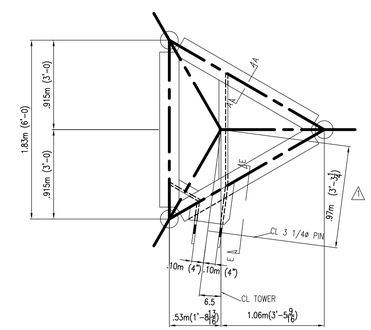

TOWER No. 7 ANTENNA 6 (EL. 305'-1 3/8)

FIXING MOUNT DETAILS

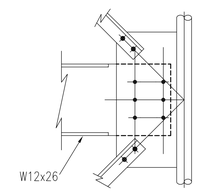

TYPICAL END DETAIL

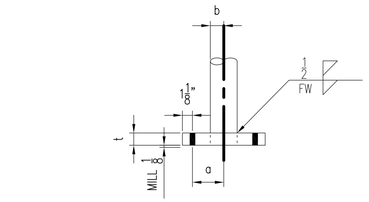

t = 1.25"		6-5/8" A325 BOLTS		
TOWER NO.	LEG ø RANGE	a	b_{min}	FW
6	SECT. 1 TO 2 3.0 to 3.25	4.5	1.5	.3125
	3.25 to 3.25	3.25	1.625	
	3.25 to 3.5	3.25	1.625	
	3.5 to 3.5	3.25	1.75	
	3.5 to 3.0	3.25	1.5	
	3.0 to 3.0	3.0	1.5	
	3.0 to 2.75	3.0	1.375	
	2.75 to 2.5	3.0	1.25	
	2.5 to 2.5	3.0	1.25	.3125
7	SECT. 1 TO 2 3.0 to 3.0	4.5	1.5	.3125
	3.0 to 3.0	3.0	1.5	
	3.0 to 3.25	3.25	1.5	
	3.25 to 3.5	3.25	1.625	
	3.5 to 3.75	3.5	1.75	
	3.5 to 3.0	3.25	1.5	
	3.0 to 2.75	3.0	1.375	
	2.75 to 2.75	3.0	1.375	.3125
8	SECT. 1 TO 2 2.75 to 3.0	4.5	1.375	.3125
	2.75 to 2.75	3.0	1.375	
	3.0 to 3.0	3.0	1.5	
	3.0 to 3.25	3.25	1.5	
	3.25 to 3.5	3.25	1.625	
	2.75 to 3.0	3.0	1.375	
	3.5 to 3.0	3.25	1.5	
	2.75 to 2.5	3.0	1.25	.3125
9	SECT. 1 TO 2 2.5 to 2.5	3.5	1.25	.3125
	2.5 to 2.5	3.0	1.25	.3125

LEG SPLICE DETAIL & SCHEDULE

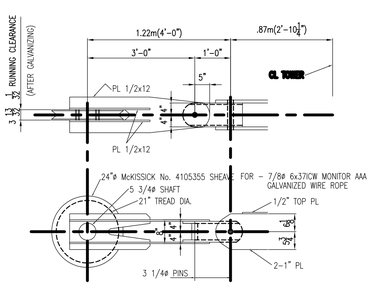

ANTENNA SUPPORT ASSEMBLE

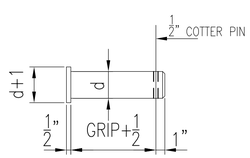

TYPICAL PIN DETAIL

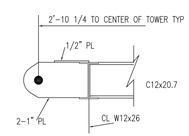

SECTION E-E

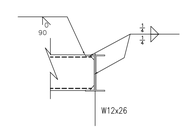

SECTION A-A

NOTES:
1. ALL CONNECTIONS HAVE TWO 5/8 A325X BOLTS WITH ANCO LOCK NUTS U.N.
2. ALL PINS SHALL BE GRADE 4140 ANNEALED AND GALVANIZED AFTER FABRICATION (MIN Fy=50 KSI)
3. ALL COTTER PINS SHALL BE AISI TYPE 305 or 316 STEINLESS STEEL

AS BUILT DRAWING

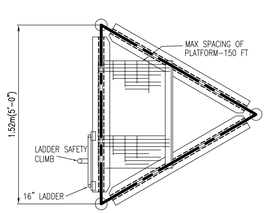

TYPICAL CROSS SECTION
TOWERS 9

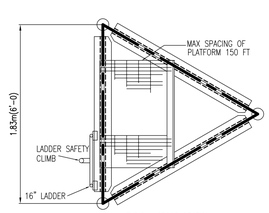

TYPICAL CROSS SECTION
TOWERS 6,7 & 8

REV	DESCRIPTION	DATE	APPD.
1	FIXING MOUNT-TOWER 7(2'-10 1/4 To 3'-3 1/4), BASE PL TOWER 9 (PL 1 1/2x 12" SQ To PL 1 1/2x14)	1/14/98	

REVISION

		DATE
DRAWN	CSCD	10/18/97
CHK. BY	FLA	10/18/97
ENGR.	FLA	10/18/97
ENGR. CHK.		

VOICE OF AMERICA
ENGINEERING & TECHNICAL OPERATIONS
U.S. INFORMATION AGENCY
WASHINGTON, D.C. 20547

APPROVALS

PROJ. MANAGER
SYSTEMS ENGR.

MARIANA RADIO RELAY STATION
TYPICAL STRUCTURAL DETAILS
ISLAND OF TINIAN, COMMONWEALTH OF
THE NORTHERN MARIANA ISLANDS

PROJ. NO.	FSCM NO. 06310	DWG. NO. SK-243-AT-014	
CONTR. NO.	SCALE:	SHEET 14 OF 15	

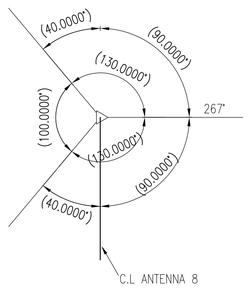

GUY PLAN

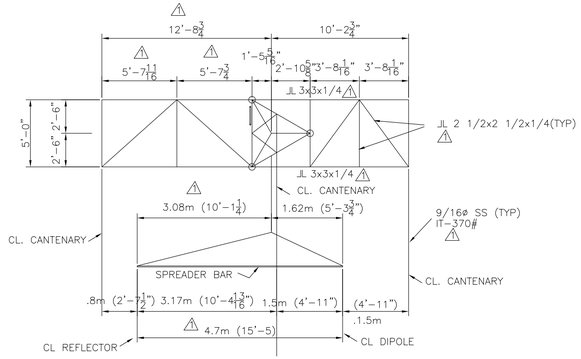

SECTION A–A

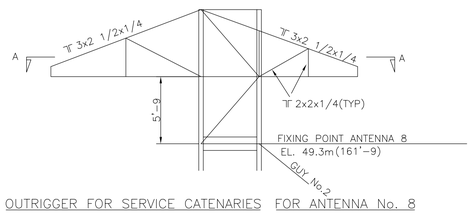

OUTRIGGER FOR SERVICE CATENARIES FOR ANTENNA No. 8

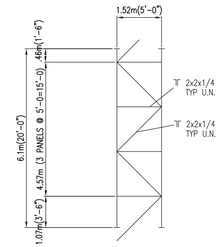

TYPICAL SECTION

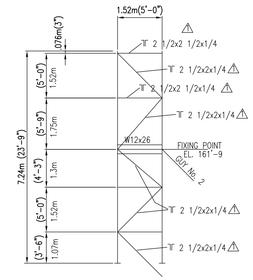

TOP SECTION

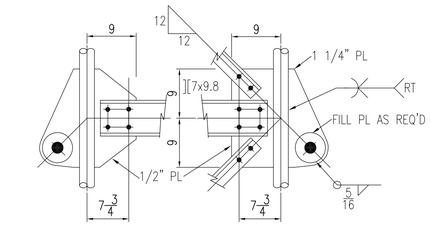

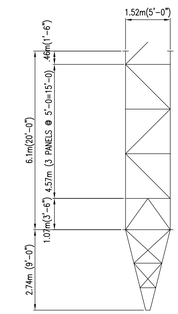

TOWER ELEVATION

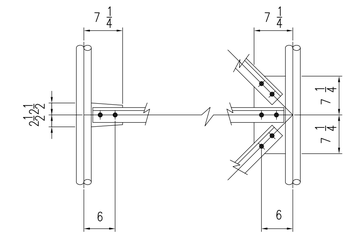

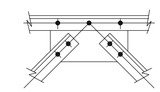

STRUT DETAIL @ EL. 12'-6"

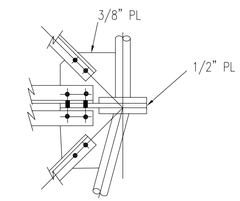

TYPICAL WEB DETAILS

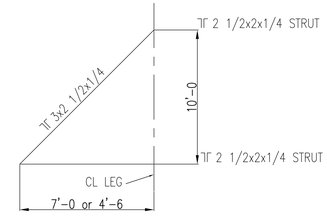

TYP HANGER DETAIL
@ CTWT SUPPORT &
DEFLECTOR SHEAVE MT.

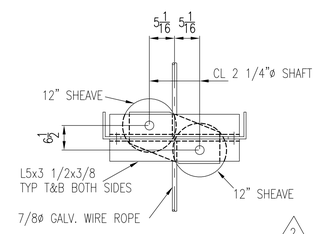

SECTION D–D

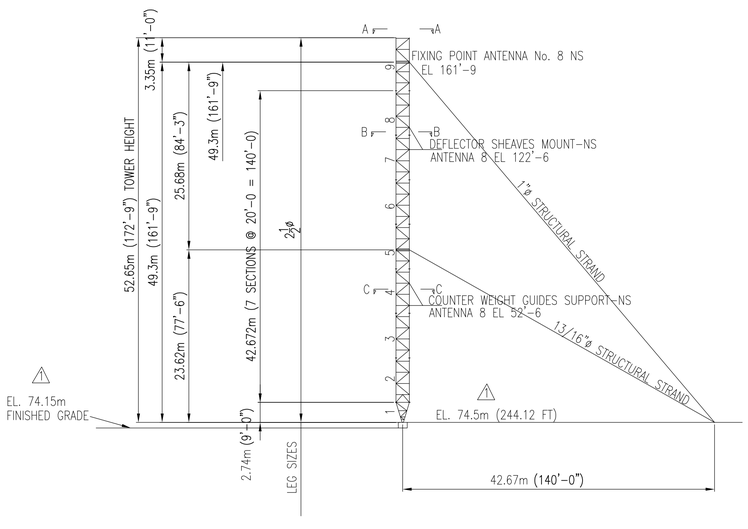

ELEVATION TOWER 9

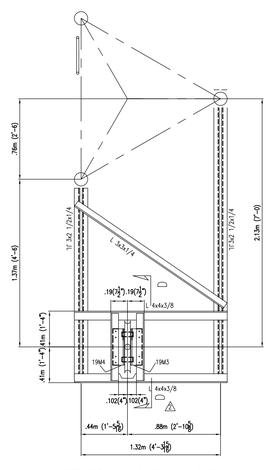

DEFLECTOR SHEAVE MOUNT EL 122'-6
SECTION B–B

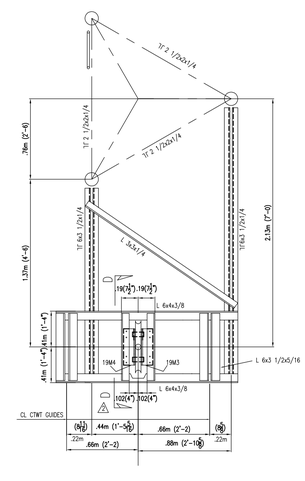

COUNTER WEIGHT GUIDE SUPPORT EL 52'-6
SECTION C–C

AS BUILT DRAWING

NOTES:
1. SEE DRAWING No. SK-243-AT-001 FOR TOWER SPECIFICATIONS
2. SEE DRAWING No. SK-243-AT-007, 014 & 015 FOR STANDARD TOWER DETAILS AND FIXING POINT MOUNT DETAILS
3. ALL CONNECTIONS HAVE TWO 5/8 A325X BOLTS WITH ANCO LOCK NUTS UNLESS NOTED
4. ALL GUSSETS PLATES 3/8" UNLESS NOTED
5. ALL WELDS 1/4" FF UNLESS NOTED
6. 12" SHEAVES ARE Mc KISSICK ROLL FORGED SHEAVES No. 042671 FOR 7/8" WIRE ROPE

REV	DESCRIPTION	DATE	APPD.
2	SECTION D–D	6/25/98	
1	GENERAL REVISIONS	1/12/98	

REVISION

		DATE
DRAWN	CSCD	10/18/97
CHK. BY	FLA	10/18/97
ENGR.	FLA	10/18/97
ENGR. CHK.		

VOICE OF AMERICA
ENGINEERING & TECHNICAL OPERATIONS
U.S. INFORMATION AGENCY
WASHINGTON, D.C. 20547

APPROVALS

PROJ. MANAGER
SYSTEMS ENGR.

MARIANA RADIO RELAY STATION

STRUCTURAL DETAILS OF TOWER #9

ISLAND OF TINIAN, COMMONWEALTH OF THE NORTHERN MARIANA ISLANDS

PROJ. NO.	FSCM NO. 06310	DWG. NO. SK-243-AT-013	
CONTR. NO.	SCALE:	SHEET 13	OF 15

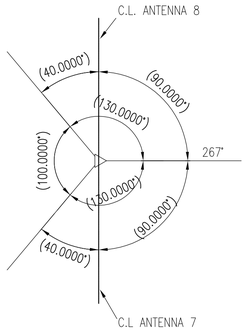

GUY PLAN

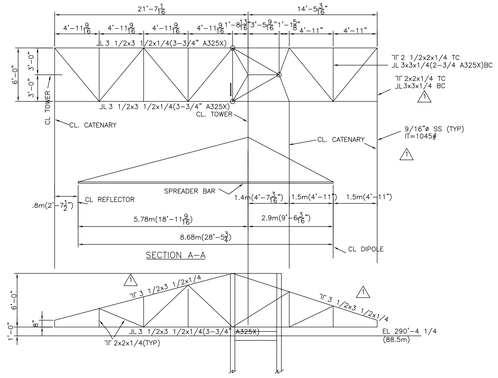

OUTRIGGER FOR SERVICE CATENARIES FOR ANTENNA 7

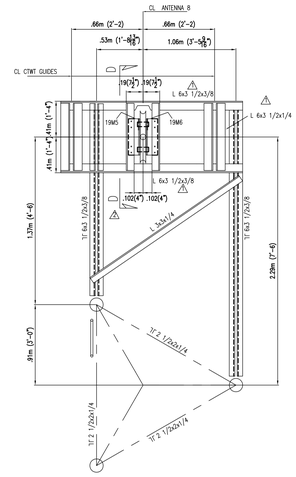

COUNTER WEIGHT GUIDE SUPPORT EL 52'–6
SECTION E–E

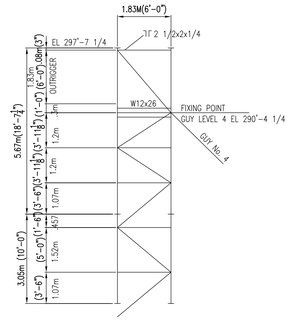

SECTIONS No. 15 & 16

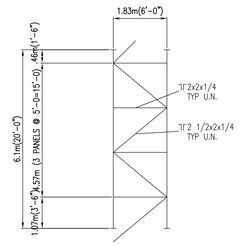

TYPICAL SECTION

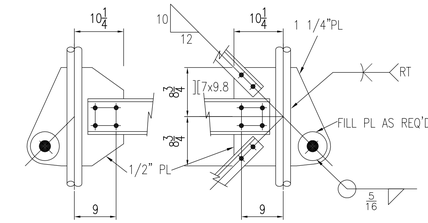

TYPICAL WEB DETAILS

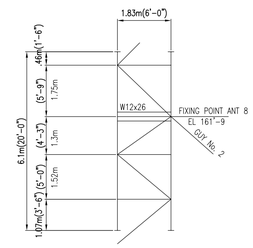

SECTION No. 9

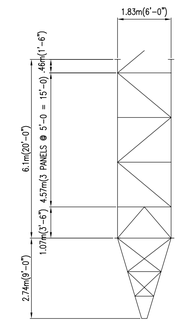

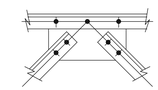

STRUT DETAIL @ EL 12'–6

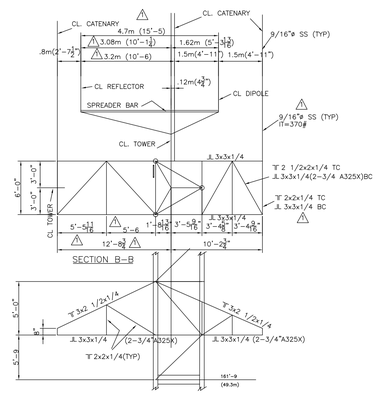

OUTRIGGER FOR SERVICE CATENARIES FOR ANTENNA 8

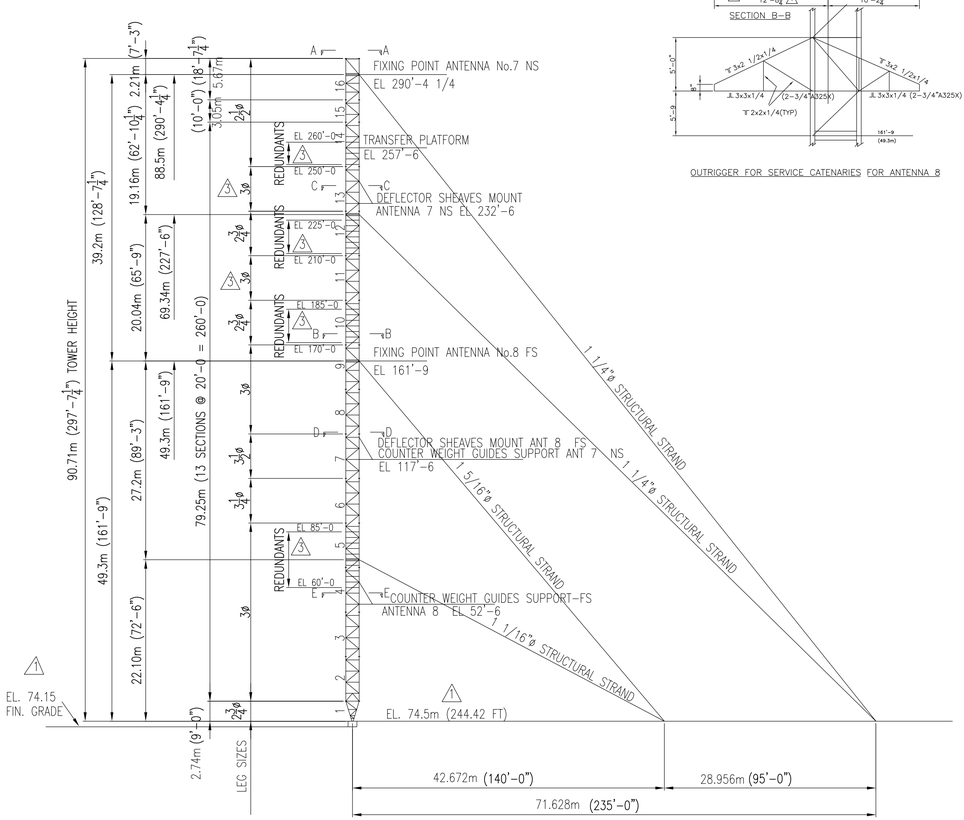

ELEVATION TOWER 8

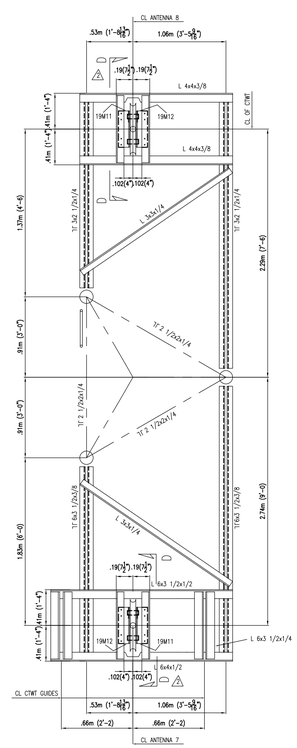

COUNTER WEIGHT GUIDE SUPPORT EL 117'–6
SECTION D–D

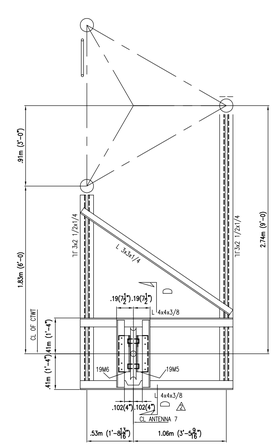

DEFLECTOR SHEAVE MOUNT EL 232'–6
SECTION C–C

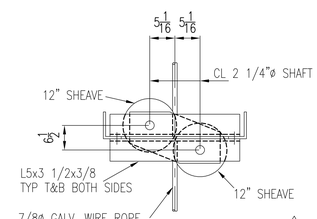

SECTION D–D

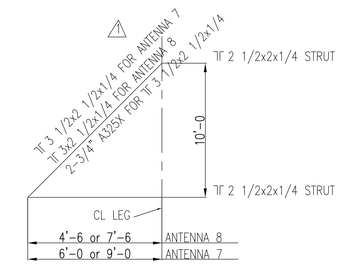

TYP HANGER DETAIL
@ CTWT SUPPORT &
DEFLECTOR SHEAVE MT.

AS BUILT DRAWING

NOTES:
1. SEE DRAWING No. SK–243–AT–001 FOR TOWER SPECIFICATIONS
2. SEE DRAWING No. SK–243–AT–007, 014 & 015 FOR STANDARD TOWER DETAILS AND FIXING POINT MOUNT DETAILS
3. ALL CONNECTIONS HAVE TWO 5/8 A325X BOLTS WITH ANCO LOCK NUTS UNLESS NOTED
4. ALL GUSSETS PLATES 3/8" UNLESS NOTED
5. ALL WELDS 1/4" FF UNLESS NOTED
6. 12" SHEAVES ARE Mc KISSICK ROLL FORGED SHEAVES–No. 0462671 FOR 7/8" WIRE ROPE

REV	DESCRIPTION	DATE	APPD.
3	21"ø LEG CHANGE TO 3"ø LEGS SEE SHT NO. 7 FOR REDUNDANT DETAILS	12/6/99	
2	SECTION D–D	6/25/98	
1	GENERAL REVISIONS	1/12/98	

REVISION

		DATE
DRAWN	CSCD	10/18/97
CHK. BY	FLA	10/18/97
ENGR.	FLA	10/18/97
ENGR. CHK.		

VOICE OF AMERICA
ENGINEERING & TECHNICAL OPERATIONS
U.S. INFORMATION AGENCY
WASHINGTON, D.C. 20547

APPROVALS

PROJ. MANAGER
SYSTEMS ENGR.

MARIANA RADIO RELAY STATION
STRUCTURAL DETAILS OF TOWER #8
ISLAND OF TINIAN, COMMONWEALTH OF
THE NORTHERN MARIANA ISLANDS

PROJ. NO.	FSCM NO. 06310	DWG. NO. SK–243–AT–012
CONTR. NO.	SCALE:	SHEET 12 OF 15

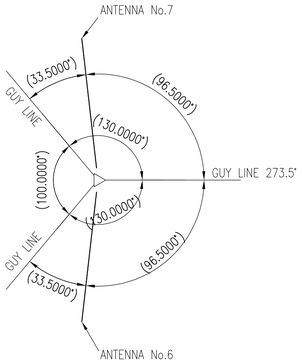

GUY PLAN

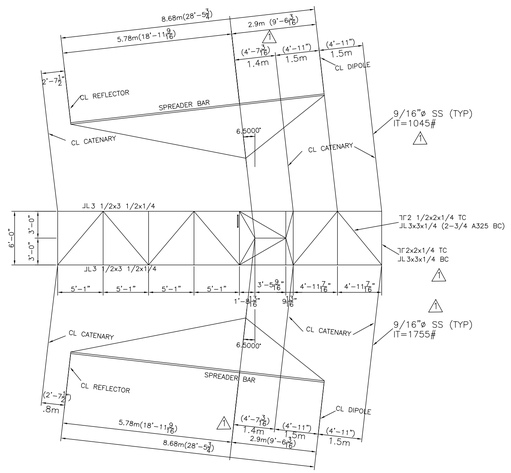

SECTION A–A

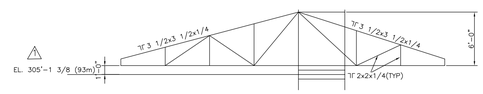

OUTRIGGER FOR SERVICE CATENARIES

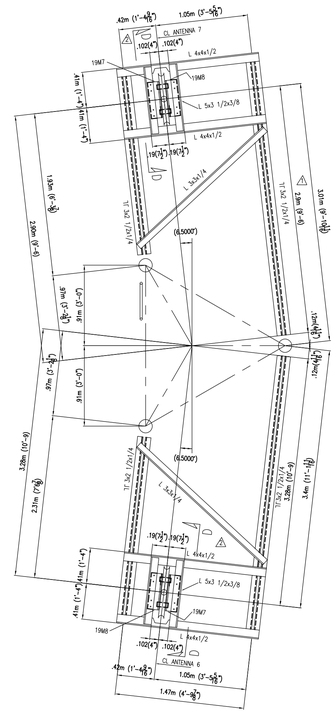

DEFLECTOR SHEAVE MOUNT EL 222'-6
ANTENNAS 6 & 7
SECTION B–B

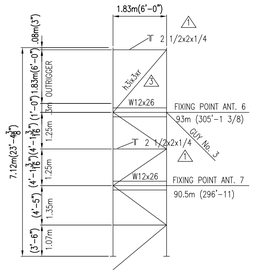

TOP SECTION

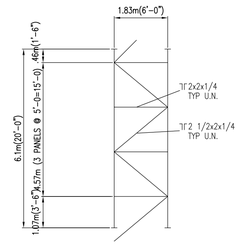

TYPICAL SECTION

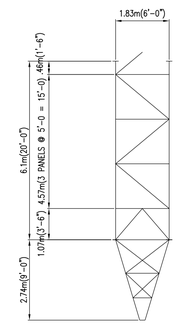

TOWER ELEVATION

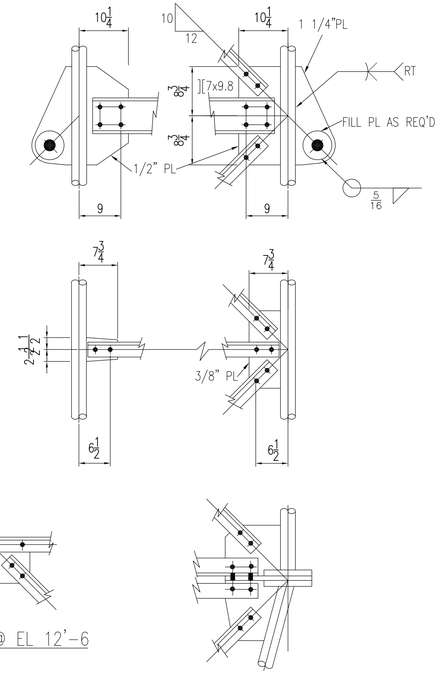

STRUT DETAIL @ EL 12'-6

TYPICAL WEB DETAILS

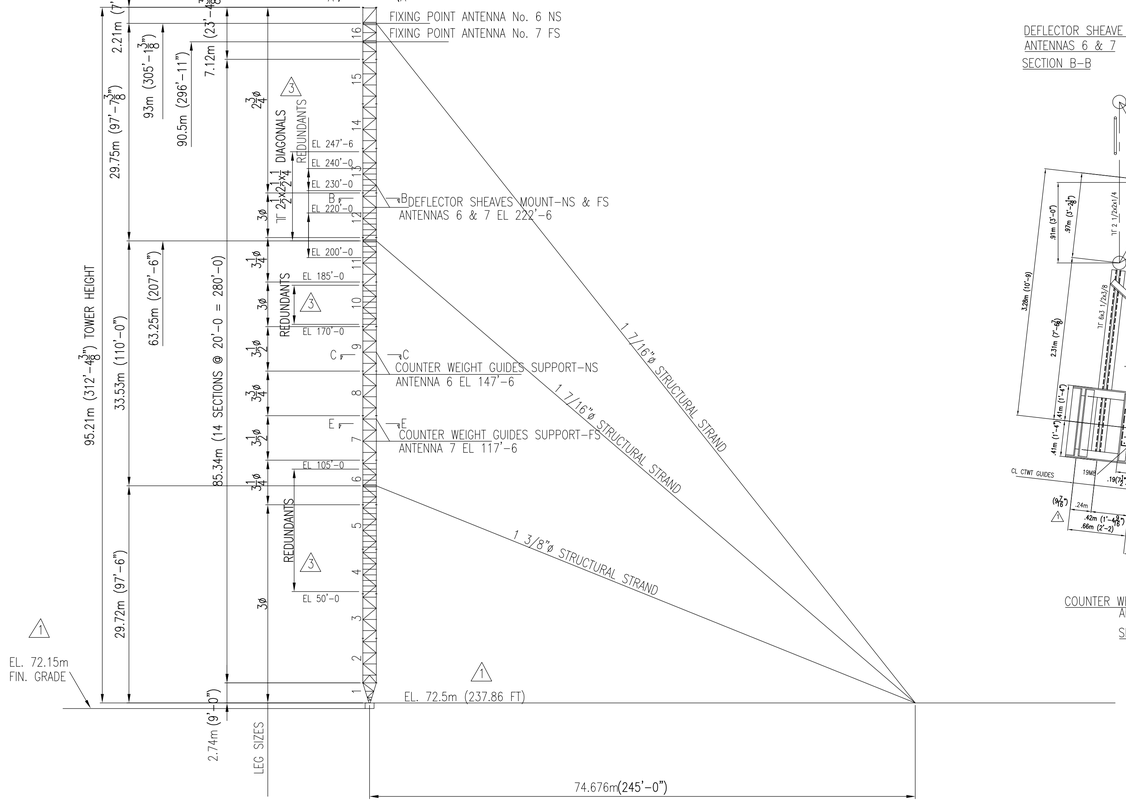

ELEVATION TOWER 7

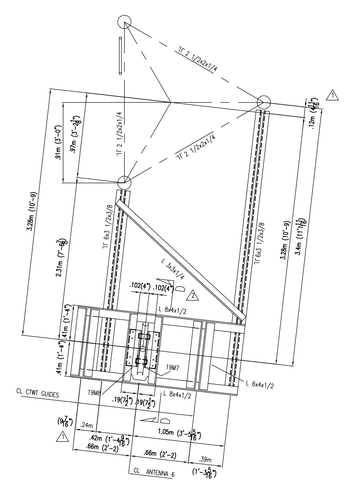

COUNTER WEIGHT GUIDE SUPPORT EL 147'-6
ANTENNA 6
SECTION C–C

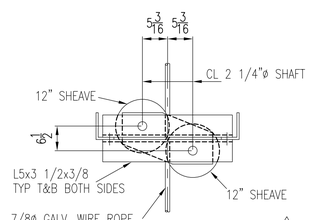

SECTION D–D

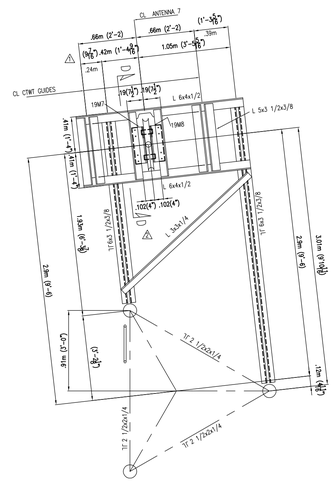

COUNTER WEIGHT GUIDE SUPPORT EL 117'-6
ANTENNA 7
SECTION E–E

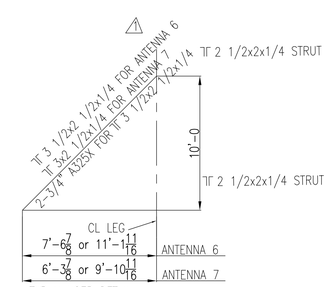

TYP HANGER DETAIL
@ CTWT SUPPORT &
DEFLECTOR SHEAVE MT.

AS BUILT DRAWING

NOTES:
1. SEE DRAWING No. SK-243-AT-001 FOR TOWER SPECIFICATIONS
2. SEE DRAWING No. SK-243-AT-007, 014 & 015 FOR STANDARD TOWER DETAILS AND FIXING POINT MOUNT DETAILS
3. ALL CONNECTIONS HAVE TWO 5/8 A325X BOLTS WITH ANCO LOCK NUTS UNLESS NOTED
4. ALL GUSSETS PLATES 3/8" UNLESS NOTED
5. ALL WELDS 1/4" FF UNLESS NOTED
6. 12" SHEAVES ARE Mc KISSICK ROLL FORGED SHEAVES–No. 0462671 FOR 7/8" WIRE ROPE

REV	DESCRIPTION	DATE	APPD.
3	SEE SHT. NO. 7 FOR REDUNDANT DETAILS h2ix2xr DIAGONAL CHANGE TO h2ix2ixr & h3ix3xr	12/6/99	
2	SECTION D–D	6/25/98	
1	GENERAL REVISIONS	1/12/98	

REVISION

		DATE
DRAWN	CSCD	10/18/97
CHK. BY	FLA	10/18/97
ENGR.	FLA	10/18/97
ENGR. CHK.		

APPROVALS

PROJ. MANAGER
SYSTEMS ENGR.

VOICE OF AMERICA
ENGINEERING & TECHNICAL OPERATIONS
U.S. INFORMATION AGENCY
WASHINGTON, D.C. 20547

MARIANA RADIO RELAY STATION
STRUCTURAL DETAILS OF TOWER #7
ISLAND OF TINIAN, COMMONWEALTH OF
THE NORTHERN MARIANA ISLANDS

PROJ. NO.	FSCM NO. 06310	DWG. NO. SK-243-AT-011
CONTR. NO.	SCALE:	SHEET 11 OF 15

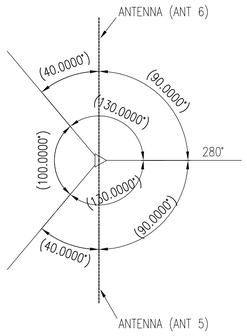

GUY PLAN

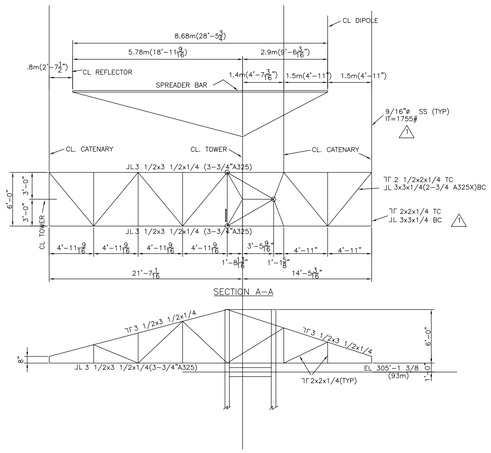

OUTRIGGER FOR SERVICE CATENARIES FOR ANTENNA 6

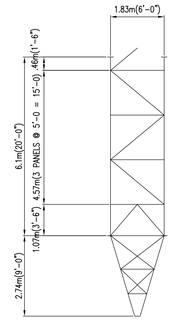

TOWER ELEVATION

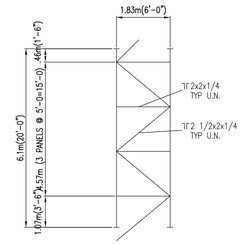

TYPICAL SECTION

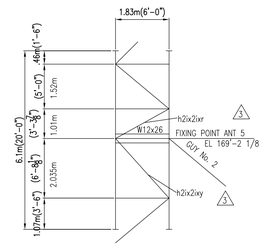

SECTION 10

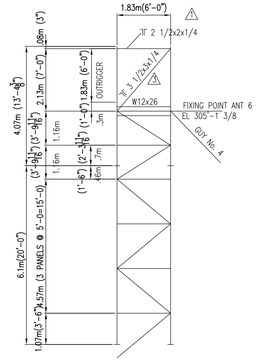

TOP TWO SECTION

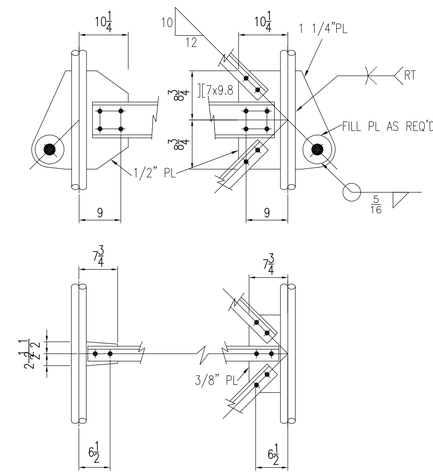

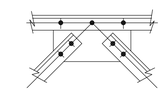

STRUT DETAIL @ EL 12'-6

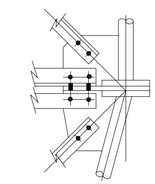

TYPICAL WEB DETAILS

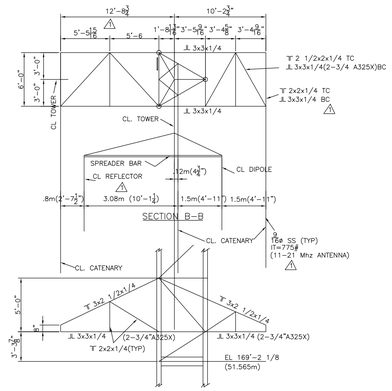

OUTRIGGER FOR SERVICE CATENARIES FOR ANTENNA 5

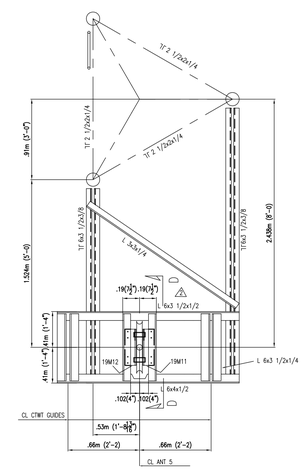

COUNTER WEIGHT GUIDE SUPPORT EL 87'-6
SECTION G-G

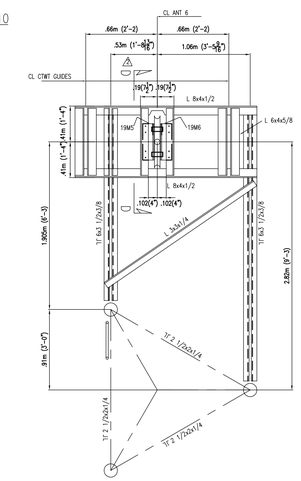

COUNTER WEIGHT GUIDE SUPPORT EL 147'-6
SECTION F-F

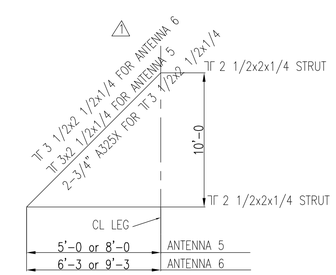

TYP HANGER DETAIL
@ CTWT SUPPORT &
DEFLECTOR SHEAVE MT.

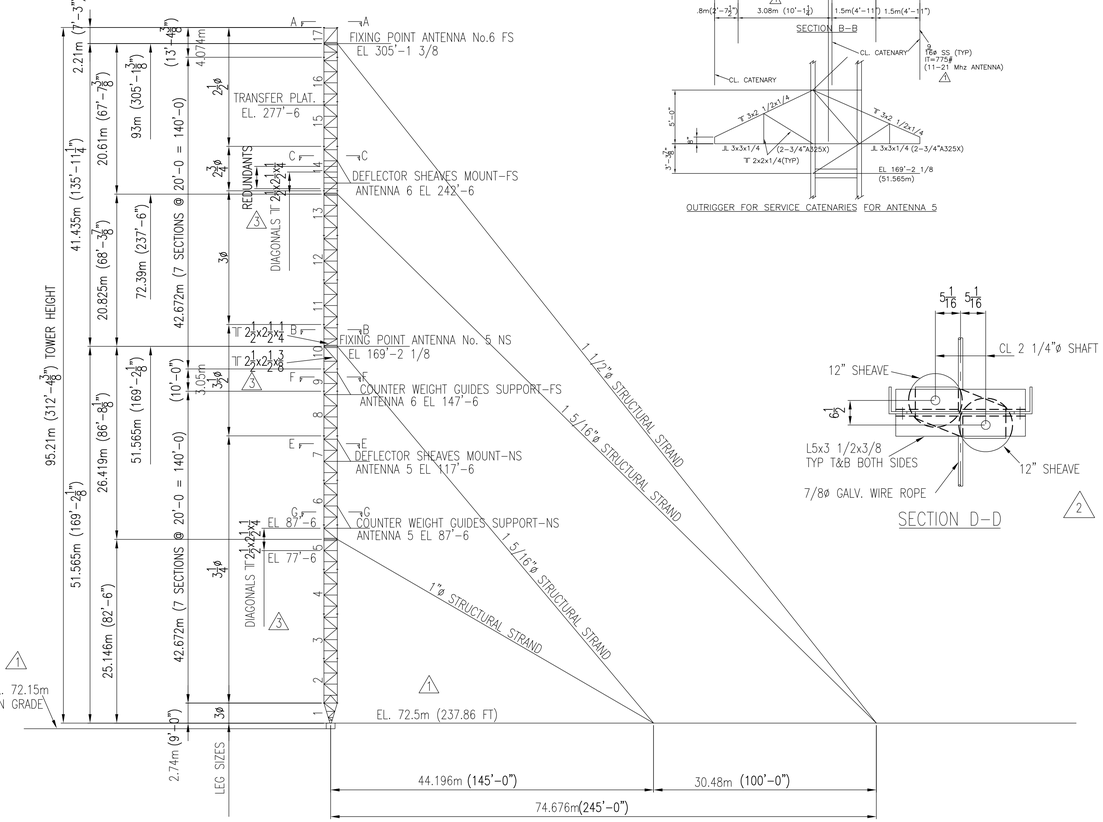

ELEVATION TOWER 6

SECTION D-D

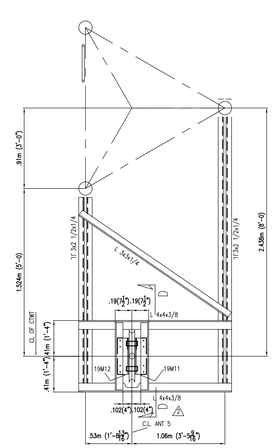

DEFLECTOR SHEAVE MOUNT EL 117'-6
SECTION E-E

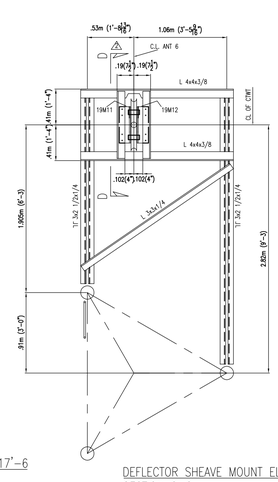

DEFLECTOR SHEAVE MOUNT EL 242'-6
SECTION C-C

AS BUILT DRAWING

NOTES:
1. SEE DRAWING No. SK-243-AT-001 FOR TOWER SPECIFICATIONS
2. SEE DRAWING No. SK-243-AT-007, 014 & 015 FOR STANDARD TOWER DETAILS AND FIXING POINT MOUNT DETAILS
3. ALL CONNECTIONS HAVE TWO 5/8 A325X BOLTS WITH ANCO LOCK NUTS UNLESS NOTED
4. ALL GUSSETS PLATES 3/8" UNLESS NOTED
5. ALL WELDS 1/4" FF UNLESS NOTED
6. 12" SHEAVES ARE Mc KISSICK ROLL FORGED SHEAVES-No. 0462671 FOR 7/8" WIRE ROPE

REV	DESCRIPTION	DATE	APPD.
3	SEE SHT. NO. 7 FOR REDUNDANT DETAILS h2ix2xr CHANGE TO h2ix2ixr & h3ix3xr	12/6/99	
2	SECTION D-D	6/25/98	
1	GENERAL REVISIONS	1/12/98	

REVISION

		DATE
DRAWN	CSCD	10/18/97
CHK. BY	FLA	10/18/97
ENGR.	FLA	10/18/97
ENGR. CHK.		

VOICE OF AMERICA
ENGINEERING & TECHNICAL OPERATIONS
U.S. INFORMATION AGENCY
WASHINGTON, D.C. 20547

APPROVALS

PROJ. MANAGER
SYSTEMS ENGR.

MARIANA RADIO RELAY STATION
STRUCTURAL DETAILS OF TOWER #6
ISLAND OF TINIAN, COMMONWEALTH OF
THE NORTHERN MARIANA ISLANDS

PROJ. NO.	FSCM NO. 06310	DWG. NO. SK-243-AT-010
CONTR. NO.	SCALE:	SHEET 10 OF 15

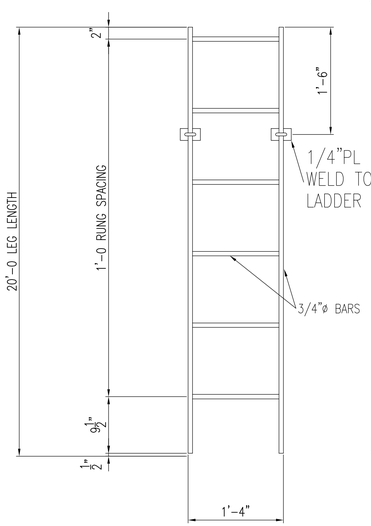

TYPICAL LADDER DETAIL

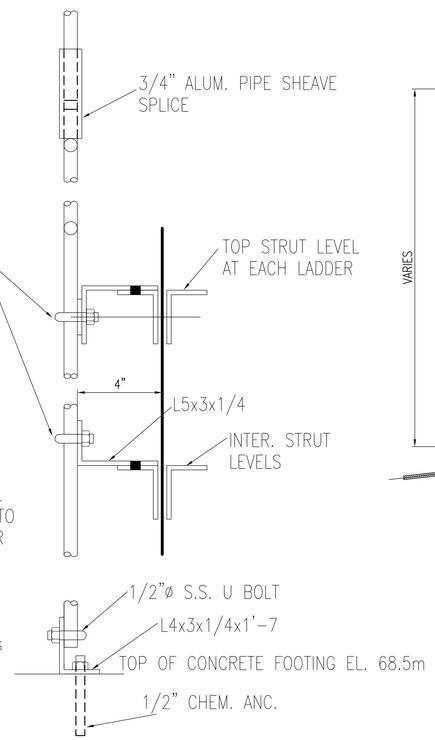

LADDER CONNECTION DETAILS

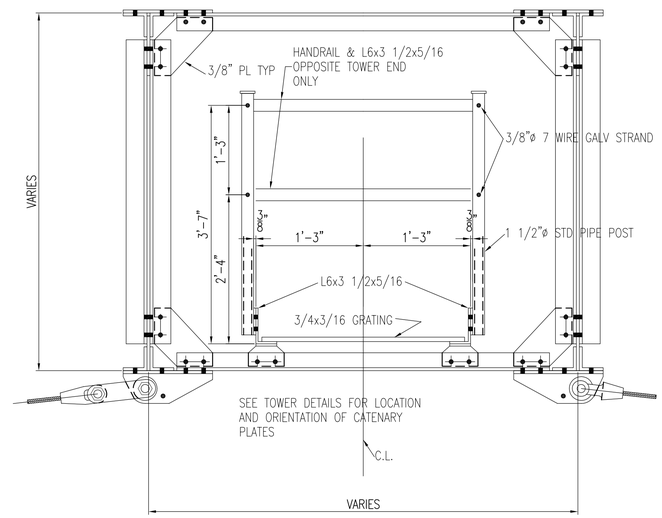

SECTION "A-A"

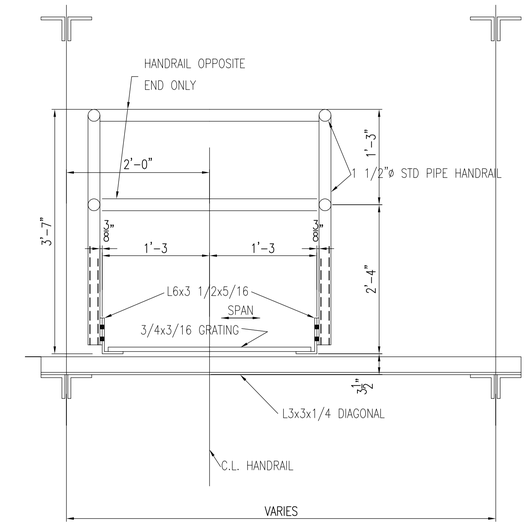

SECTION "B-B"

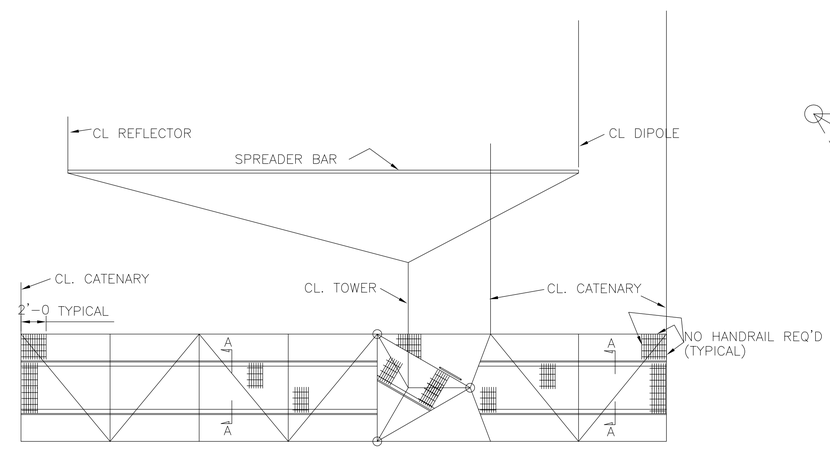

TYPICAL OUTRIGGER PLATFORM

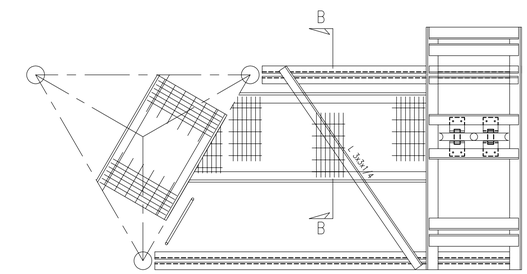

TYPICAL DEFLECTOR SHEAVE MOUNT AND COUNTERWEIGHT SUPPORT PLATFORM

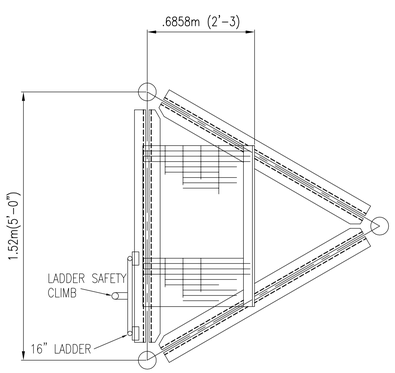

TYPICAL CROSS SECTION TOWERS 1 & 5

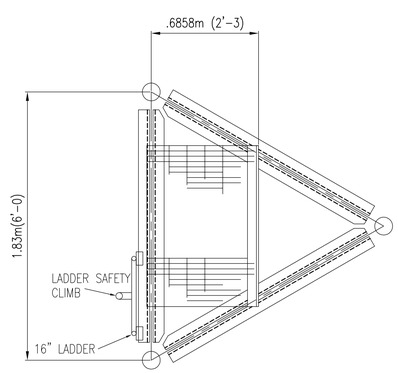

TYPICAL CROSS SECTION TOWERS 2,3 & 4

DETAILS OF INSIDE PLATFORMS

LOCATION OF INSIDE PLATFORM

1. COUNTERWEIGHT GUIDE SUPPORTS
2. DEFLECTOR SHEAVE MOUNT
3. CATENARY OUTRIGGERS
4. ANTENNA FIXING POINT
5. INTERMEDIATE LIGHT PLATFORM TOWERS 2,3,4 (EL. 212.5 FT)
6. REST PLATFORM – TOWER No. 3 (EL. 92.5 FT AND EL. 272.5 FT)

NOTES:
1. SEE DRAWING No. SK-243-AT-001 FOR TOWER SPECIFICATIONS
2. SEE DRAWING No. SK-243-AT-007 & 008 FOR STANDARD TOWER DETAILS AND FIXING POINT MOUNT DETAILS
3. ALL CONNECTIONS HAVE TWO 5/8 A325X BOLTS WITH ANCO LOCK NUTS UNLESS NOTED
4. ALL GUSSETS PLATES 3/8" UNLESS NOTED
5. ALL WELDS 1/4" FF UNLESS NOTED

AS BUILT DRAWING

REV	DESCRIPTION	DATE	APPD.
2	GENERAL REVISIONS	9/14/97	
1	GENERAL REVISIONS	8/12/97	

REVISION

		DATE
DRAWN	CSCD	
CHK. BY	FLA	7-22-97
ENGR.	FLA	7-22-97
ENGR. CHK.		

APPROVALS

PROJ. MANAGER _____
SYSTEMS ENGR. _____

VOA VOICE OF AMERICA

VOICE OF AMERICA
ENGINEERING & TECHNICAL OPERATIONS
U.S. INFORMATION AGENCY
WASHINGTON, D.C. 20547

MARIANA RADIO RELAY STATION
PLATFORM DETAILS
ISLAND OF TINIAN, COMMONWEALTH OF
THE NORTHERN MARIANA ISLANDS

PROJ. NO.	FSCM NO. 06310	DWG. NO. SK-243-AT-009
CONTR. NO.	SCALE:	SHEET 9 OF 15

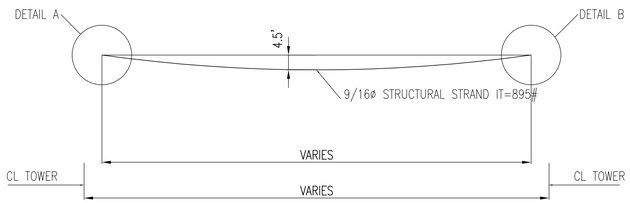

ANTENNAS No. 1 & 4

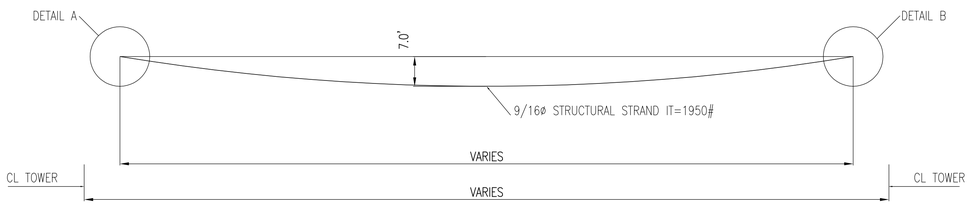

ANTENNAS No. 2 & 3

SERVICE CATENARIES DETAIL

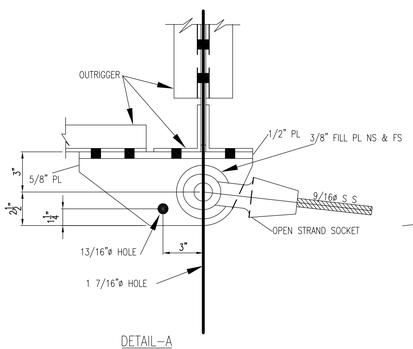

DETAIL-A

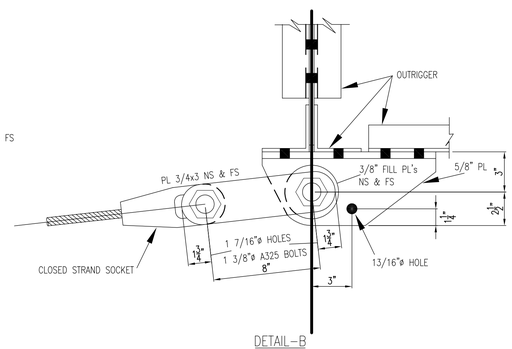

DETAIL-B

CATENARY CONNECTION DETAILS

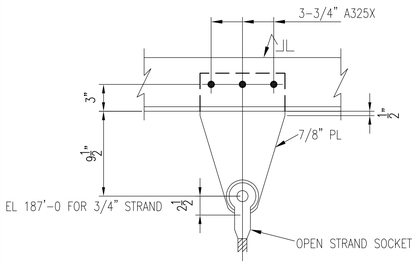

DETAIL-C TYP FOR 3/4&5/8 STRUCTURAL STRAND FOR TOWERS No. 2,3 & 4

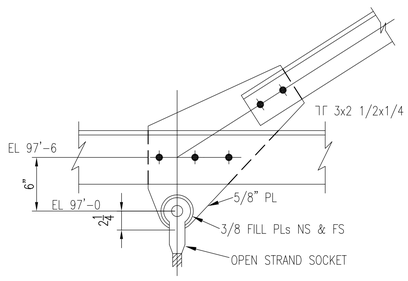

DETAIL-C FOR 5/8" STRUCTURAL STRAND TOWERS No. 1

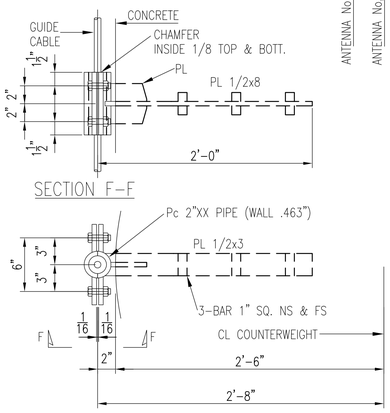

SECTION F-F

SECTION E-E

COUNTERWEIGHT CABLE GUIDE DETAILS

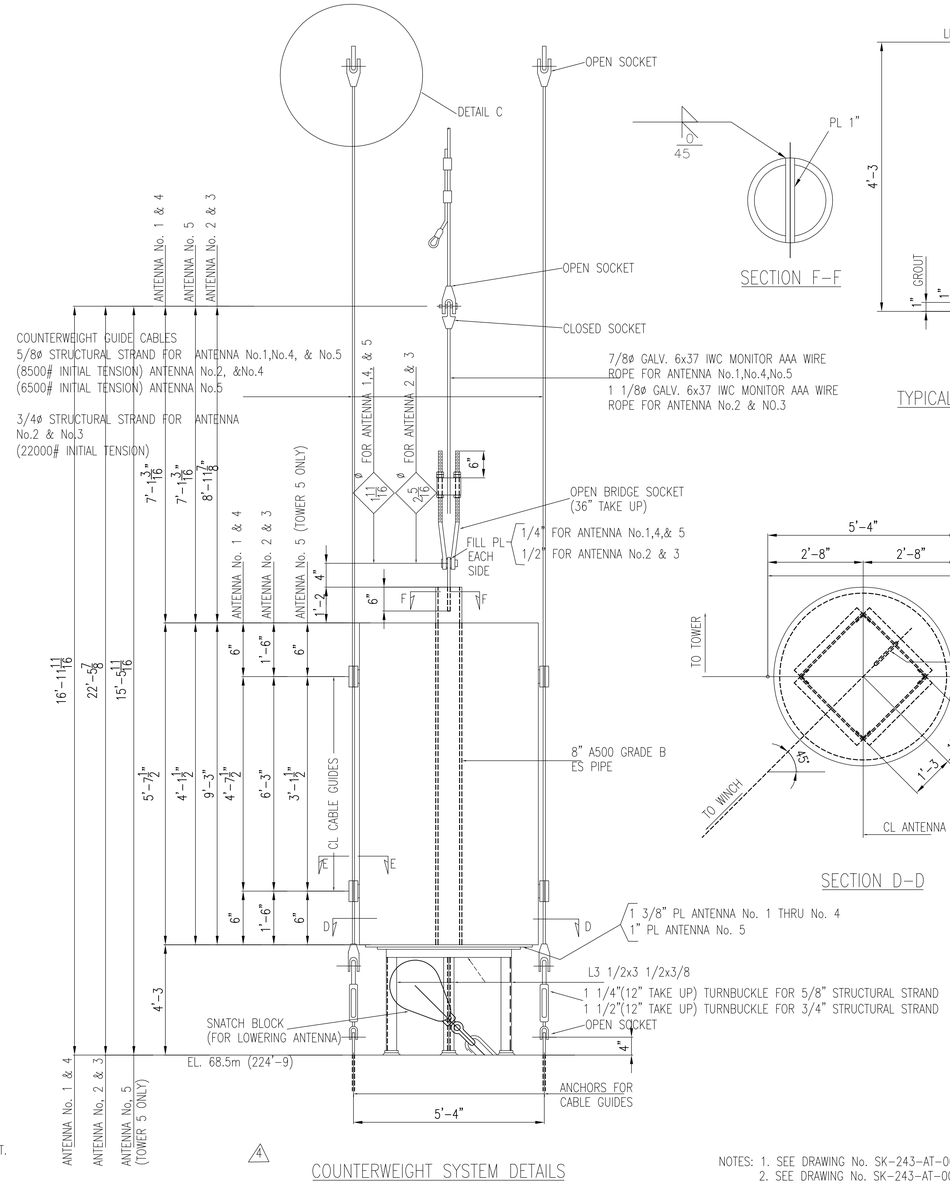

COUNTERWEIGHT SYSTEM DETAILS

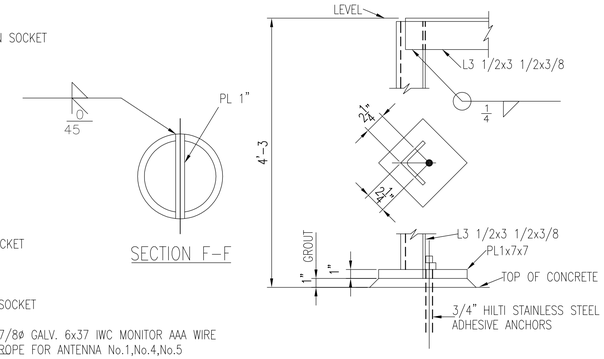

TYPICAL DETAIL OF COUNTERWEIGHT SUPPORT

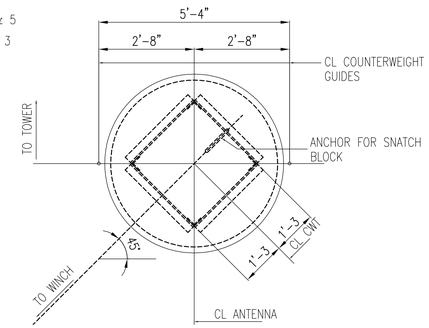

SECTION D-D

NOTES:
1. SEE DRAWING No. SK-243-AT-001 FOR TOWER SPECIFICATIONS
2. SEE DRAWING No. SK-243-AT-007 & 008 FOR STANDARD TOWER DETAILS AND FIXING POINT MOUNT DETAILS
3. ALL CONNECTIONS HAVE TWO 5/8 A325X BOLTS WITH ANCO LOCK NUTS UNLESS NOTED
4. ALL GUSSETS PLATES 3/8" UNLESS NOTED
5. ALL WELDS 1/4" FF UNLESS NOTED

AS BUILT DRAWING

REV	DESCRIPTION	DATE	APPD.
4	GENERAL REVISIONS	1/8/98	
3	GENERAL REVISIONS	9/14/97	
2	GENERAL REVISIONS	8/12/97	
1	GENERAL REVISIONS	7/14/97	

REVISION

		DATE
DRAWN	CSCD	5/25/97
CHK. BY	FLA	5/25/97
ENGR.	FLA	5/25/97
ENGR. CHK.		

APPROVALS

PROJ. MANAGER

SYSTEMS ENGR.

VOICE OF AMERICA
ENGINEERING & TECHNICAL OPERATIONS
U.S. INFORMATION AGENCY
WASHINGTON, D.C. 20547

MARIANA RADIO RELAY STATION
CATENARIES AND COUNTER WEIGHT SYSTEMS DETAILS
ISLAND OF TINIAN, COMMONWEALTH OF THE NORTHERN MARIANA ISLANDS

PROJ. NO.

FSCM NO. 06310

DWG. NO. SK-243-AT-008

CONTR. NO.

SCALE:

SHEET 8 OF 15

SAYED HAMID BEHBEHANI & SONS CO. W.L.L.

ANDERSON-FOREMAN ENGINEERS, INC.
STRUCTURAL ENGINEERS
2801 EDMUND HWY.
W. COLUMBIA, S.C.

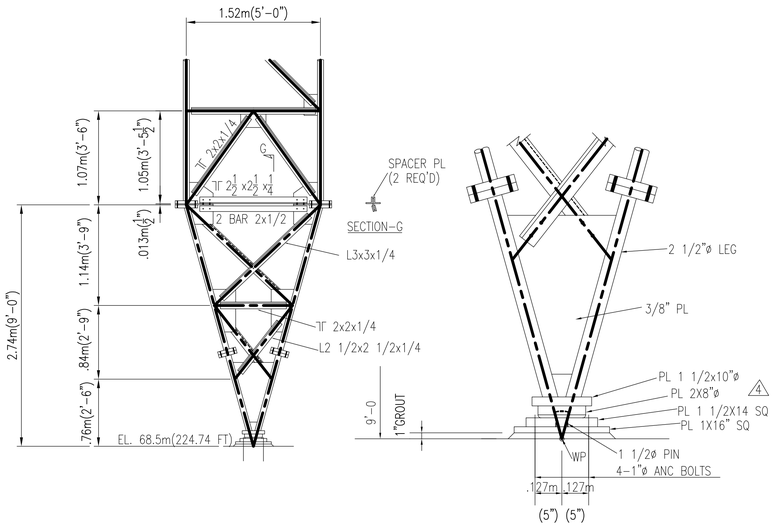

TOWER No's 1 & 5 BASE SECTION DETAIL

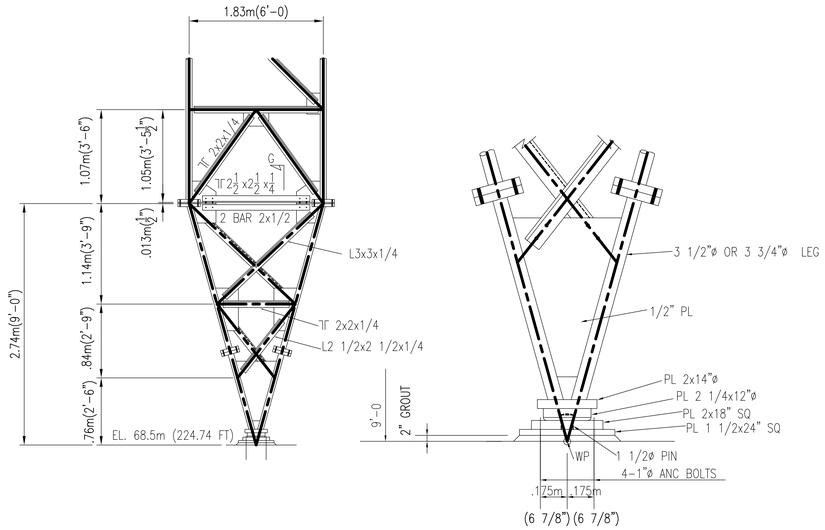

TOWER No's 2,3 & 4 BASE SECTION DETAIL

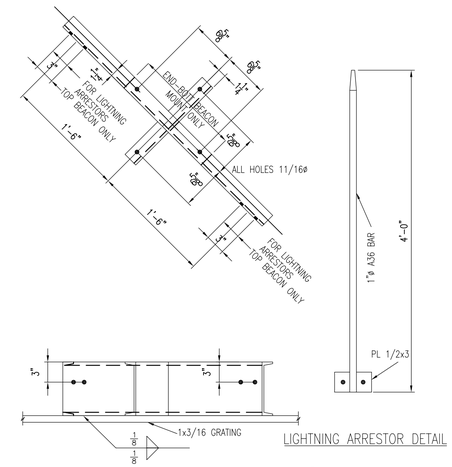

STROBE BEACON MOUNT DETAIL

LIGHTNING ARRESTOR DETAIL

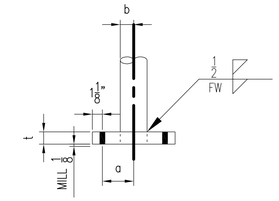

t = 1.25"			6-5/8" A325 BOLTS	
TOWER NO.	LEG ø RANGE	a	b_{min}	FW
1	2.75 to 2.75	3.0	1.375	.3125
2 & 4	4.0 to 4.0	3.5	2.0	.3125
	3.75 to 4.0	3.5	2.0	
	3.75 to 3.75	3.5	1.875	
	3.5 to 3.75	3.5	1.875	
	3.5 to 3.5	3.25	1.75	
	3.0 to 3.5	3.25	1.5	
	3.0 to 3.0	3.0	1.5	.3125
3	3.75 to 3.75	3.5	1.875	.3125
	3.5 to 3.75	3.5	1.75	
	3.5 to 3.5	3.5	1.75	
	3.25 to 3.5	3.25	1.625	
	3.25 to 3.25	3.25	1.625	
	3.25 to 3.0	3.25	1.5	
	3.0 to 3.0	3.0	1.5	.3125
5	2.75 to 2.75	3.0	1.375	.3125
	2.75 to 3.0	3.0	1.375	
	3.0 to 3.0	3.0	1.5	
	3.0 to 3.25	3.25	1.5	
	3.0 to 3.5	3.25	1.5	
	3.25 to 3.5	3.25	1.625	.3125
t = 1.375"			6-3/4" A325 BOLTS	
5	C10 to C11 3.5 to 3.5	3.25	1.75	.375

LEG SPLICE DETAIL & SCHEDULE

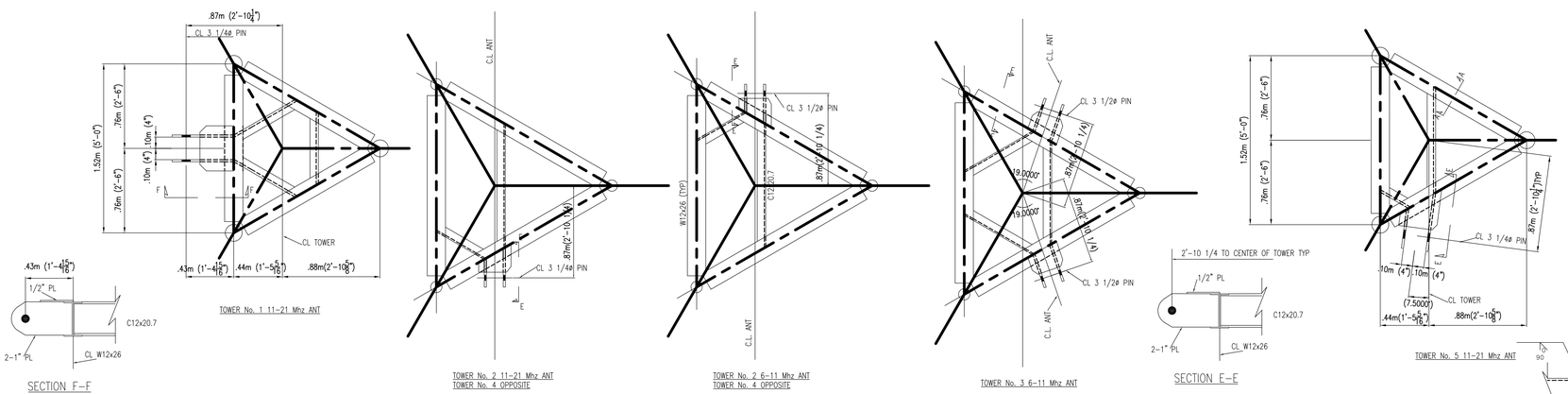

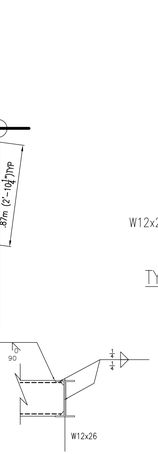

TYPICAL END DETAIL

SECTION A-A

FIXING MOUNT DETAILS

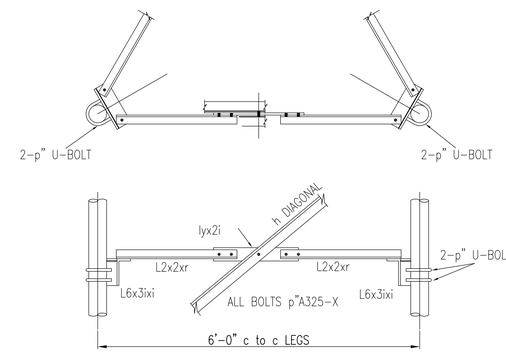

REDUNDANT DETAIL

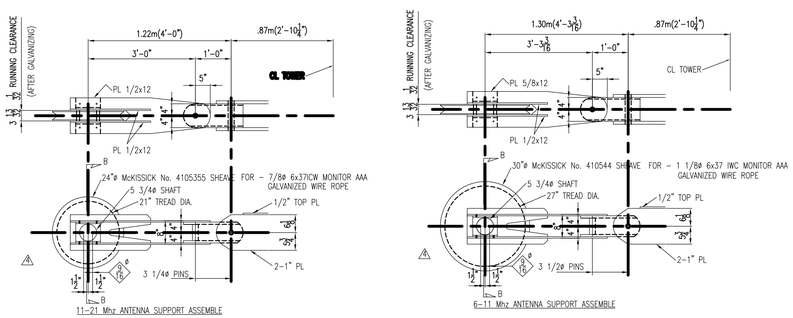

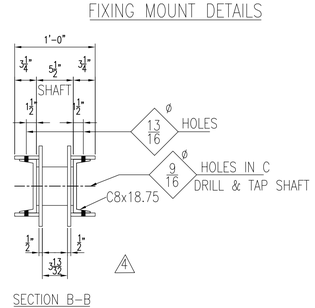

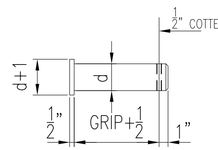

TYPICAL PIN DETAIL

NOTES: 1. ALL CONNECTIONS HAVE TWO 5/8 A325X BOLTS WITH ANCO LOCK NUTS U.N.
2. ALL PINS SHALL BE GRADE 4140 ANNEALED AND GALVANIZED AFTER FABRICATION (MIN Fy=50 KSI)
3. ALL COTTER PINS SHALL BE AISI TYPE 305 or 316 STAINLESS STEEL

AS BUILT DRAWING

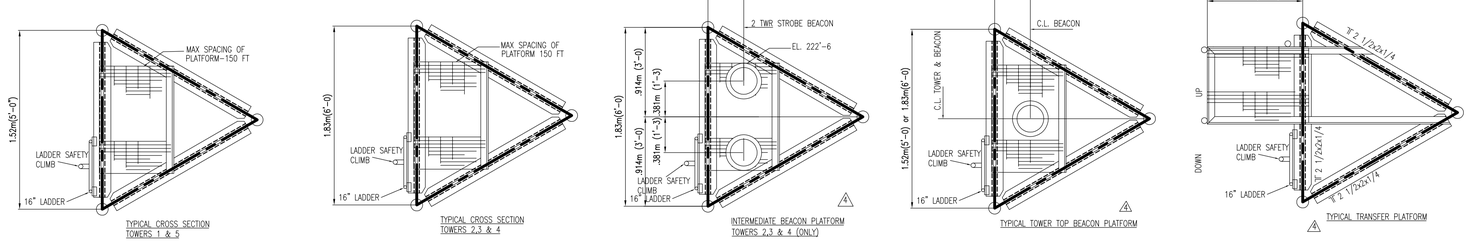

REV	DESCRIPTION	DATE	APPD.
5	REDUNDANT DETAIL	12/6/99	
4	GENERAL REVISIONS	1/8/98	
3	GENERAL REVISIONS	9/14/97	
2	GENERAL REVISIONS	7/14/97	
1	GENERAL REVISIONS	5/25/97	

REVISION

		DATE
DRAWN	CSCD	
CHK. BY	FLA	4/30/97
ENGR.	FLA	4/30/97
ENGR. CHK.		

APPROVALS

PROJ. MANAGER

SYSTEMS ENGR.

VOICE OF AMERICA
ENGINEERING & TECHNICAL OPERATIONS
U.S. INFORMATION AGENCY
WASHINGTON, D.C. 20547

MARIANA RADIO RELAY STATION
TYPICAL STRUCTURAL DETAILS
ISLAND OF TINIAN, COMMONWEALTH OF
THE NORTHERN MARIANA ISLANDS

PROJ. NO.	FSCM NO. 06310	DWG. NO.	SK-243-AT-007
CONTR. NO.	SCALE:	SHEET 7	OF 15

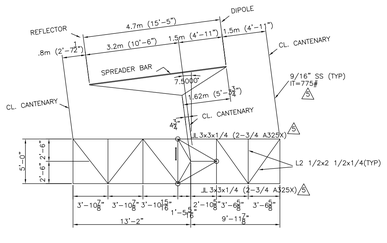

SECTION F-F

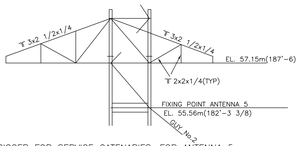

OUTRIGGER FOR SERVICE CATENARIES FOR ANTENNA 5

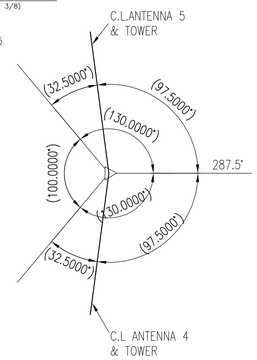

GUY PLAN

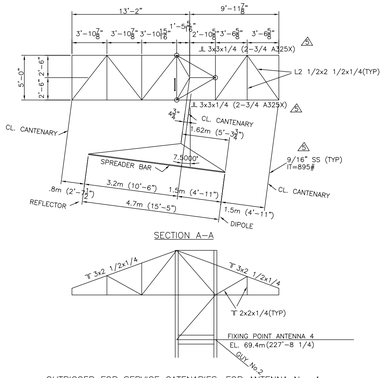

SECTION A-A

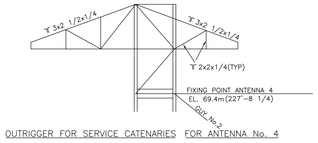

OUTRIGGER FOR SERVICE CATENARIES FOR ANTENNA No. 4

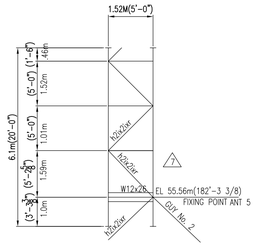

SECTION No.s 11

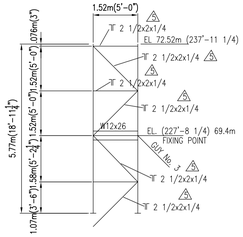

TOP SECTION

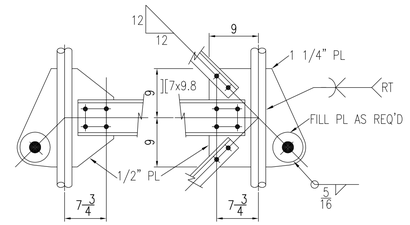

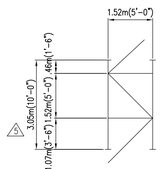

SECTION No. 7

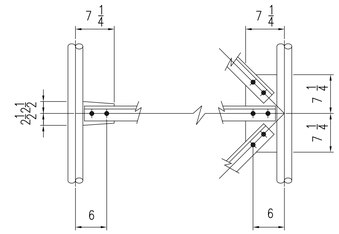

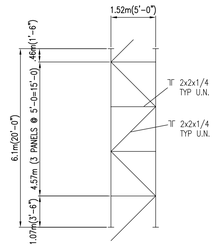

TYPICAL SECTION

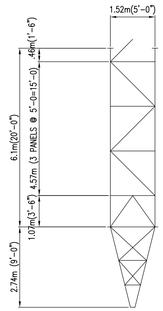

TOWER ELEVATION

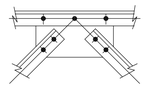

STRUT DETAIL @ EL. 12'-6"

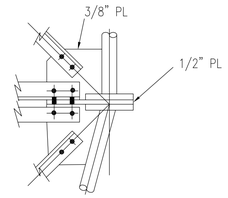

TYPICAL WEB DETAILS

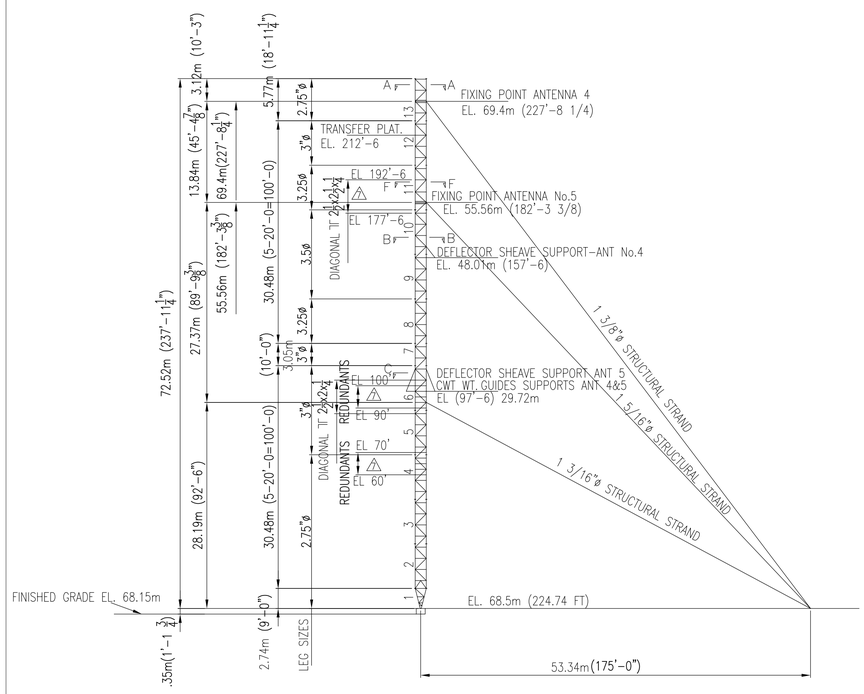

ELEVATION TOWER 5

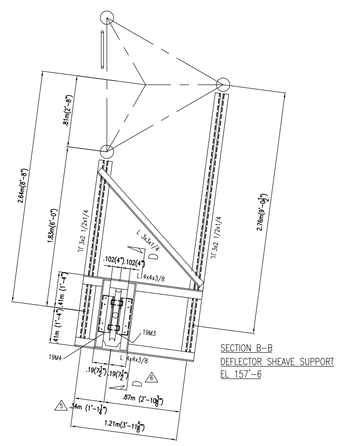

SECTION B-B
DEFLECTOR SHEAVE SUPPORT
EL 157'-6

TOWER-5

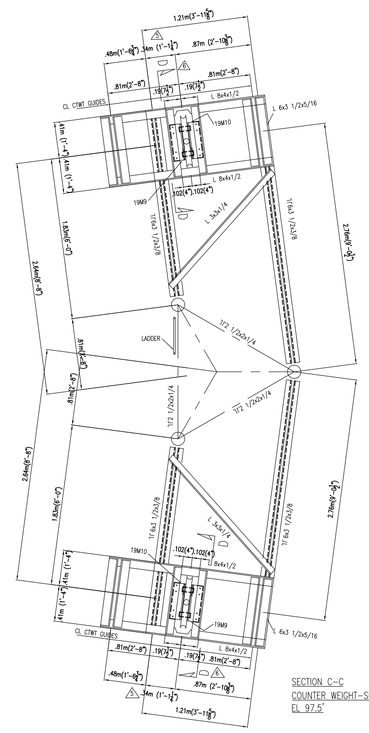

SECTION C-C
COUNTER WEIGHT-SUPPORT
EL 97.5'

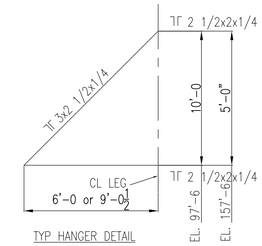

TYP HANGER DETAIL
@ CTWT SUPPORT &
DEFLECTOR SHEAVE MT.

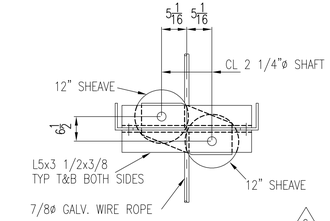

SECTION D-D

NOTES:
1. SEE DRAWING No. SK-243-AT-001 FOR TOWER SPECIFICATIONS
2. SEE DRAWING No. SK-243-AT-007 & 008 FOR STANDARD TOWER DETAILS AND FIXING POINT MOUNT DETAILS
3. ALL CONNECTIONS HAVE TWO 5/8 A325X BOLTS WITH ANCO LOCK NUTS UNLESS NOTED
4. ALL GUSSETS PLATES 3/8" UNLESS NOTED
5. ALL WELDS 1/4" FF UNLESS NOTED
6. 12" SHEAVES ARE Mc KISSICK ROLL FORGED SHEAVES No. 042671 FOR 7/8" WIRE ROPE

AS BUILT DRAWING

REV	DESCRIPTION	DATE	APPD.
7	SEE SHT. NO. 7 FOR REDUNDANT DETAILS & h2ix2xr DIAGONAL CHANGE TO h2ix2ixr	12/6/99	
6	SECTION D-D	6/25/98	
5	GENERAL REVISIONS	1/12/98	
4	GENERAL REVISIONS	9/28/97	
3	GENERAL REVISIONS	8/12/97	
2	GENERAL REVISIONS	7/14/97	
1	GENERAL REVISIONS	5/25/97	

REVISION

		DATE
DRAWN	CSCD	
CHK. BY	FLA	4/30/97
ENGR.	FLA	4/30/97
ENGR. CHK.		

VOICE OF AMERICA
ENGINEERING & TECHNICAL OPERATIONS
U.S. INFORMATION AGENCY
WASHINGTON, D.C. 20547

APPROVALS

PROJ. MANAGER _____
SYSTEMS ENGR. _____

MARIANA RADIO RELAY STATION
STRUCTURAL DETAILS OF TOWER #5
ISLAND OF TINIAN, COMMONWEALTH OF
THE NORTHERN MARIANA ISLANDS

PROJ. NO.	FSCM NO. 06310	DWG. NO.	SK-243-AT-006
CONTR. NO.	SCALE:	SHEET 6 OF 15	

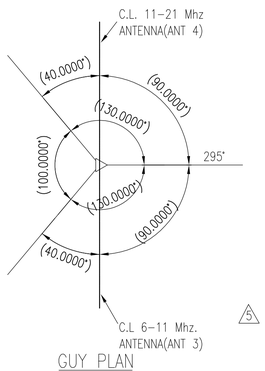

GUY PLAN

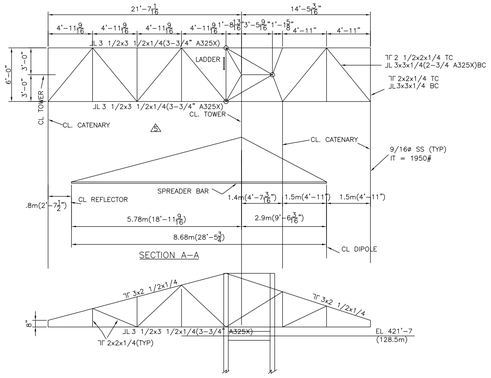

OUTRIGGER FOR SERVICE CATENARIES FOR ANTENNA 3

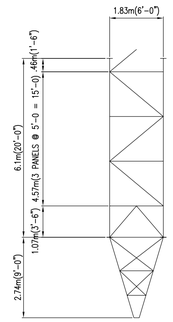

TOWER ELEVATION

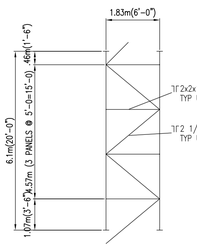

TYPICAL SECTION

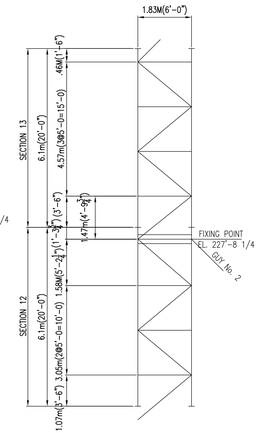

SECTION No. 12& No.13

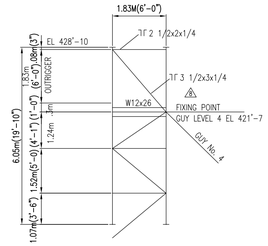

SECTION No. 22 (TOP SECTION)

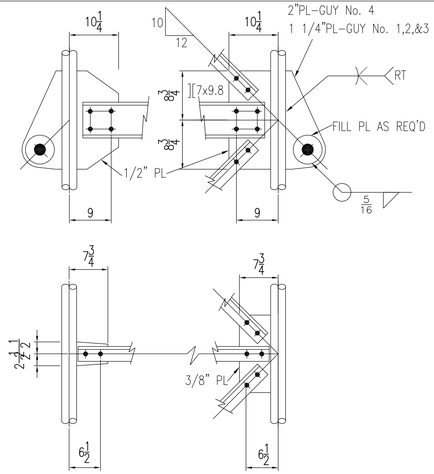

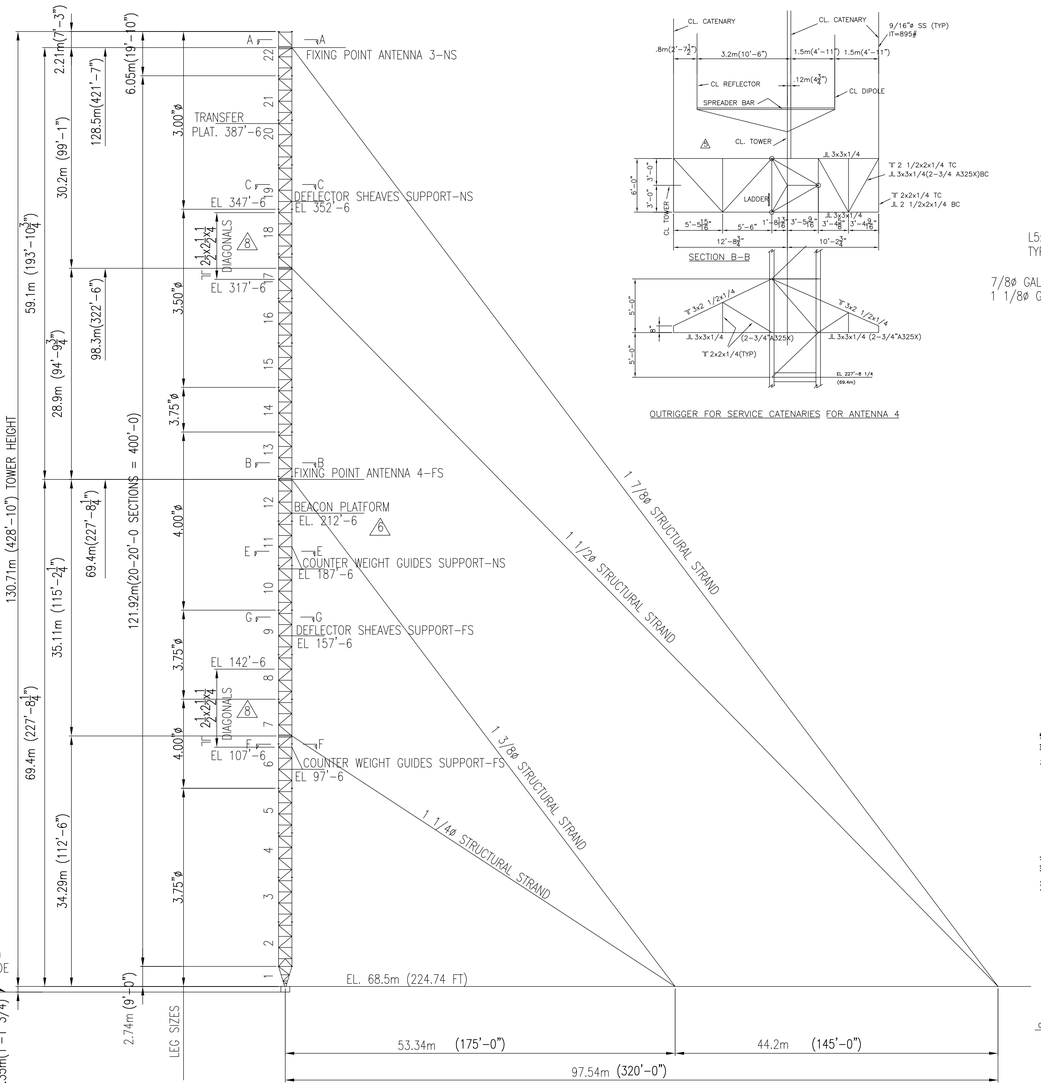

ELEVATION TOWER 4

TOWER-4

OUTRIGGER FOR SERVICE CATENARIES FOR ANTENNA 4

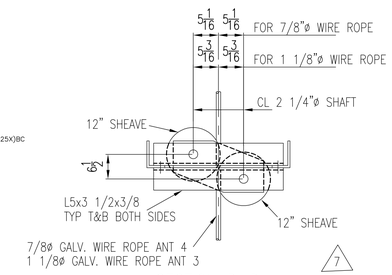

SECTION D-D

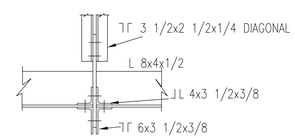

SECTION H-H

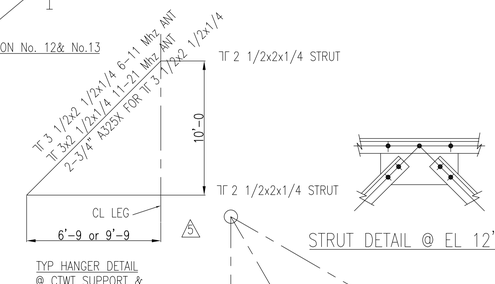

TYP HANGER DETAIL
@ CTWT SUPPORT &
DEFLECTOR SHEAVE MT.

STRUT DETAIL @ EL 12'-6

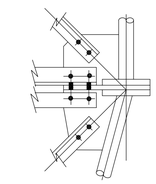

TYPICAL WEB DETAILS

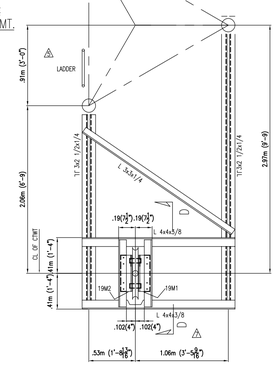

DEFLECTOR SHEAVE MOUNT EL 352'-6
SECTION C-C

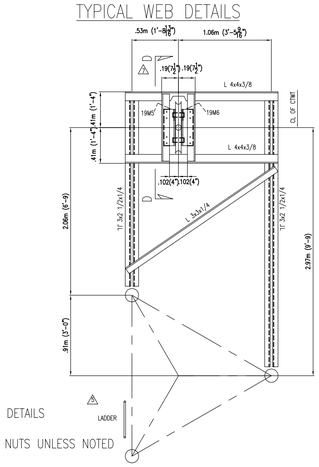

DEFLECTOR SHEAVE MOUNT EL 157'-6
SECTION G-G

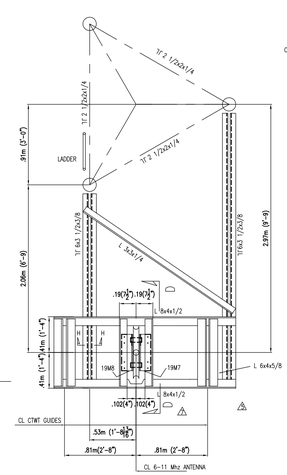

COUNTER WEIGHT GUIDE SUPPORT EL 187'-6
SECTION E-E

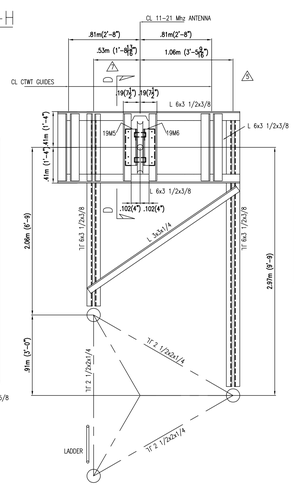

COUNTER WEIGHT GUIDE SUPPORT EL 97'-6
SECTION F-F

NOTES:
1. SEE DRAWING No. SK-243-AT-001 FOR TOWER SPECIFICATIONS
2. SEE DRAWING No. SK-243-AT-007 & 008 FOR STANDARD TOWER DETAILS AND FIXING POINT MOUNT DETAILS
3. ALL CONNECTIONS HAVE TWO 5/8 A325X BOLTS WITH ANCO LOCK NUTS UNLESS NOTED
4. ALL GUSSETS PLATES 3/8" UNLESS NOTED
5. ALL WELDS 1/4" FF UNLESS NOTED
6. 12" SHEAVES ARE Mc KISSICK ROLL FORGED SHEAVES-No. 0462671 FOR 7/8" WIRE ROPE AND No. 0462699 FOR 1 1/8" WIRE ROPE

AS BUILT DRAWING

REV	DESCRIPTION	DATE	APPD.
8	h2ix2xr DIAGONAL CHANGE TO h2ix2ixr & h3ix3xr	12/6/99	
7	SECTION D-D	6/25/98	
6	ADDED BEACON PLATFORM ELEV.	1/14/98	
5	CWT GUIDE SUPPORT (SECTION EE & FF, LADDER LOCATION, OUTRIGGER BRACING	12/18/97	
4	GENERAL REVISIONS	9/14/97	
3	GENERAL REVISIONS	8/12/97	
2	GENERAL REVISIONS	7/14/97	
1	GENERAL REVISIONS	5/25/97	

REVISION

DRAWN CSCD DATE
CHK. BY FLA 4/30/97
ENGR. FLA 4/30/97
ENGR. CHK.

APPROVALS

PROJ. MANAGER
SYSTEMS ENGR.

VOICE OF AMERICA
ENGINEERING & TECHNICAL OPERATIONS
U.S. INFORMATION AGENCY
WASHINGTON, D.C. 20547

MARIANA RADIO RELAY STATION
STRUCTURAL DETAILS OF TOWER #4
ISLAND OF TINIAN, COMMONWEALTH OF
THE NORTHERN MARIANA ISLANDS

PROJ. NO.
FSCM NO. 06310
DWG. NO. SK-243-AT-005
CONTR. NO.
SCALE:
SHEET 5 OF 15

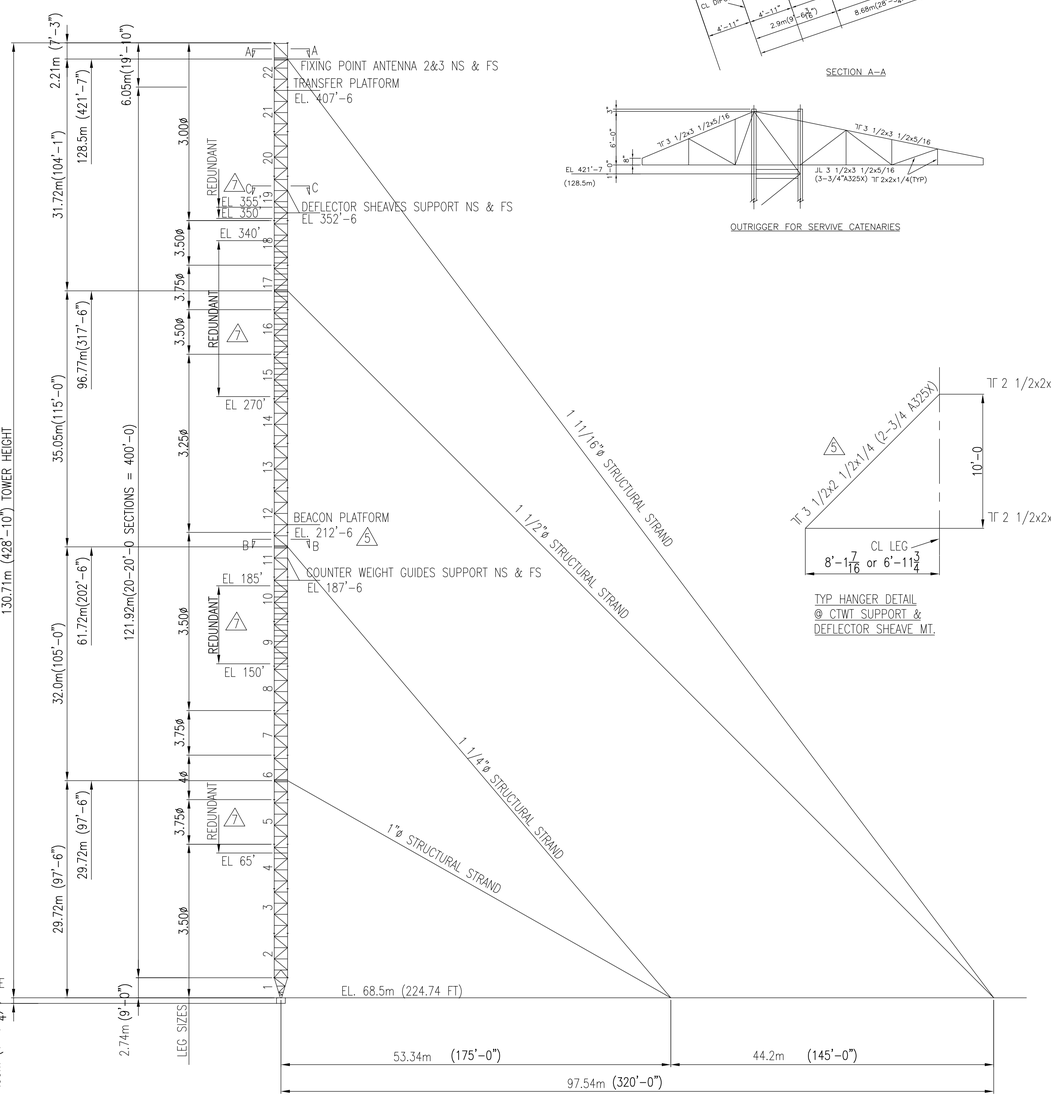

ELEVATION TOWER 3

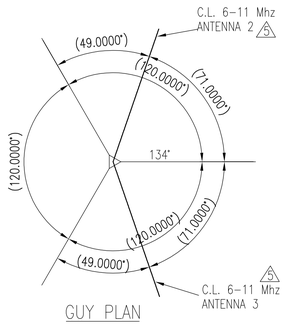

GUY PLAN

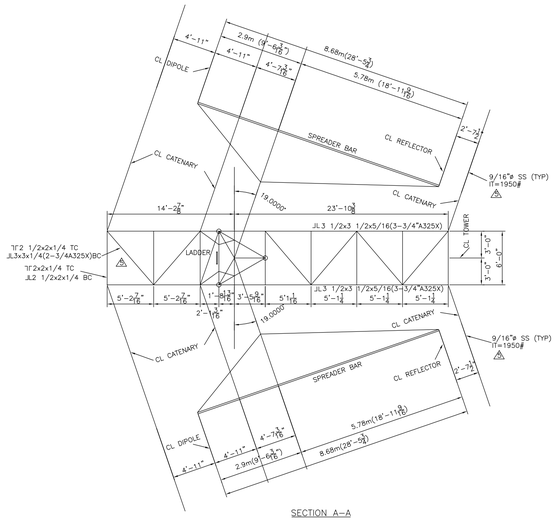

SECTION A–A

OUTRIGGER FOR SERVIVE CATENARIES

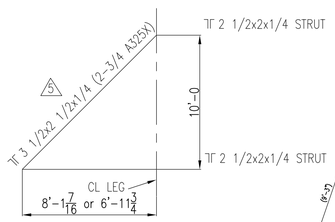

TYP HANGER DETAIL
@ CTWT SUPPORT &
DEFLECTOR SHEAVE MT.

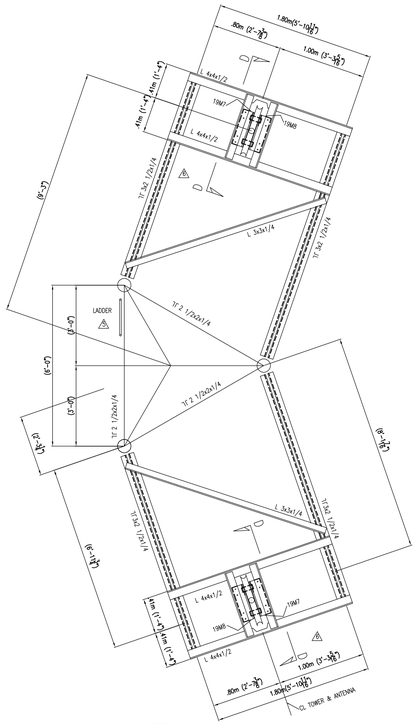

SECTION C–C
DEFLECTOR SHEAVES EL
352'-6

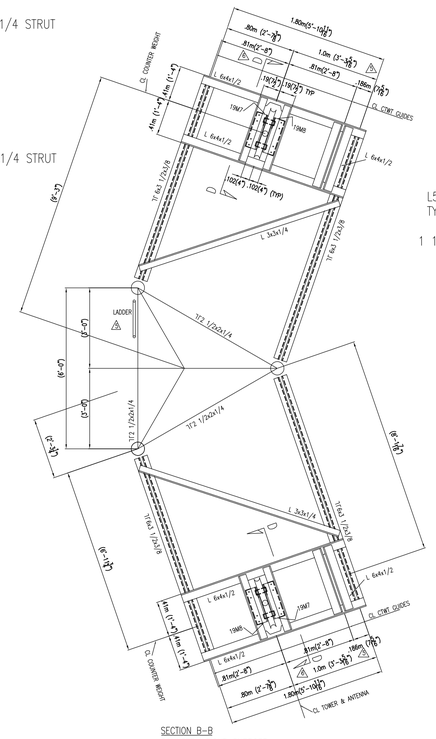

SECTION B–B
COUNTER WEIGHT–SUPPORT
EL 187'–6

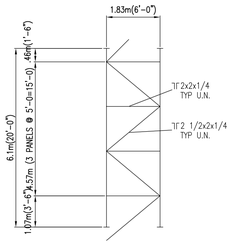

TYPICAL SECTION

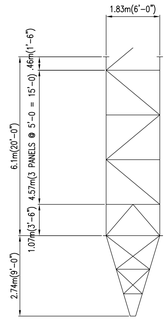

TOWER ELEVATION

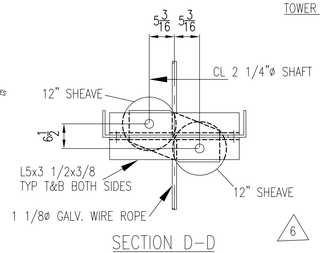

SECTION D–D

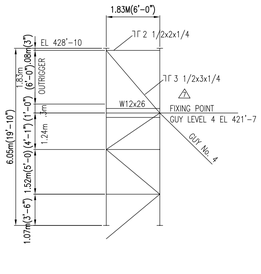

SECTION No. 22 (TOP SECTION)

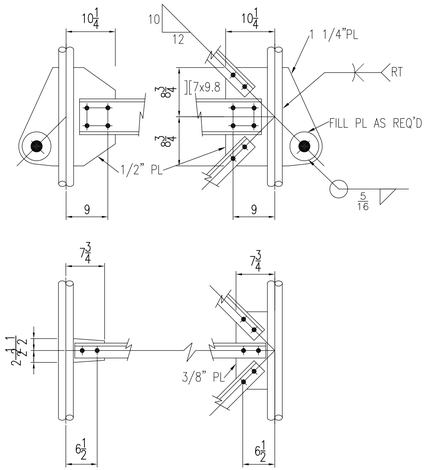

STRUT DETAIL @ EL 12'–6

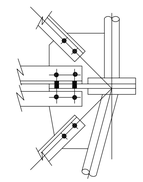

TYPICAL WEB DETAILS

NOTES:
1. SEE DRAWING No. SK–243–AT–001 FOR TOWER SPECIFICATIONS
2. SEE DRAWING No. SK–243–AT–007 & 008 FOR STANDARD TOWER DETAILS AND FIXING POINT MOUNT DETAILS
3. ALL CONNECTIONS HAVE TWO 5/8 A325X BOLTS WITH ANCO LOCK NUTS UNLESS NOTED
4. ALL GUSSETS PLATES 3/8" UNLESS NOTED
5. ALL WELDS 1/4" FF UNLESS NOTED
6. 12" SHEAVES ARE Mc KISSICK ROLL FORGED SHEAVES–No. 0462671 FOR 7/8" WIRE ROPE AND No. 0462699 FOR 1 1/8" WIRE ROPE

AS BUILT DRAWING

REV	DESCRIPTION	DATE	APPD.
7	SEE SHT NO. 5 FOR REDUNDANT DETAILS AND h2iX2xr DIAG. CHANGE TO h3iX3xr	12/6/99	
6	SECTION D–D	6/25/98	
5	ADDED BEACON PLTF. EL., REV. OUTRIGGER FOR SER. CATENARIES REV. GUY PLAN, REV. HANGER DET., REV. SECT. B–B & C–C	1/14/98	
4	GENERAL REVISIONS	9/14/97	
3	GENERAL REVISIONS	8/12/97	
2	GENERAL REVISIONS	7/14/97	
1	GENERAL REVISIONS	5/25/97	

REVISION

		DATE
DRAWN	CSCD	
CHK. BY	FLA	4/30/97
ENGR.	FLA	4/30/97
ENGR. CHK.		

APPROVALS

PROJ. MANAGER
SYSTEMS ENGR.

VOICE OF AMERICA
ENGINEERING & TECHNICAL OPERATIONS
U.S. INFORMATION AGENCY
WASHINGTON, D.C. 20547

MARIANA RADIO RELAY STATION
STRUCTURAL DETAILS OF TOWER #3
ISLAND OF TINIAN, COMMONWEALTH OF
THE NORTHERN MARIANA ISLANDS

PROJ. NO.	FSCM NO. 06310	DWG. NO. SK–243–AT–004
CONTR. NO.	SCALE:	SHEET 4 OF 15

TOWER–3

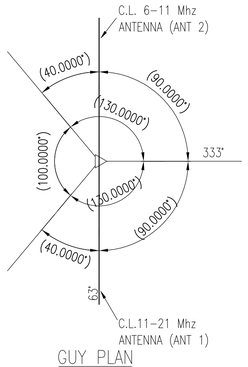

GUY PLAN

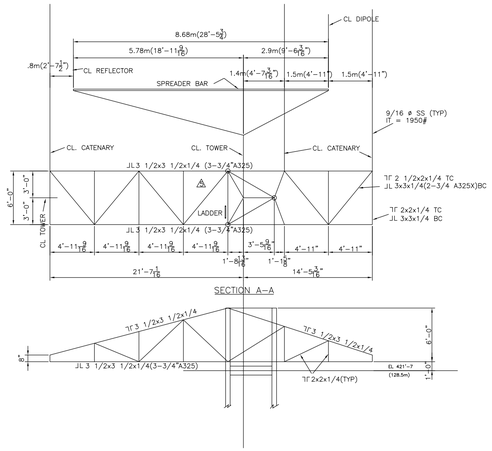

OUTRIGGER FOR SERVICE CATENARIES FOR ANTENNA 2

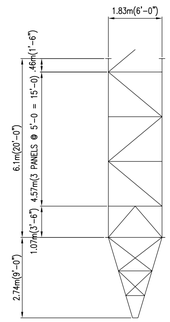

TOWER ELEVATION

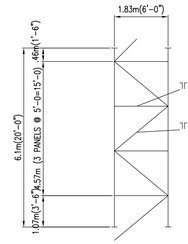

TYPICAL SECTION

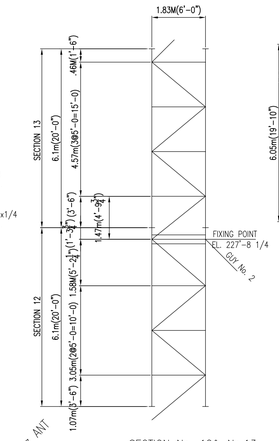

SECTION No. 12& No.13

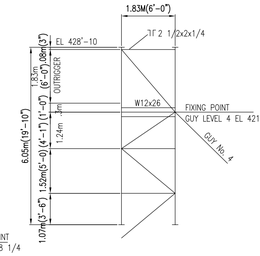

SECTION No. 22 (TOP SECTION)

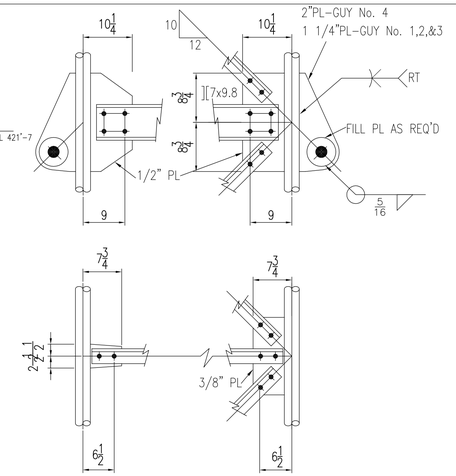

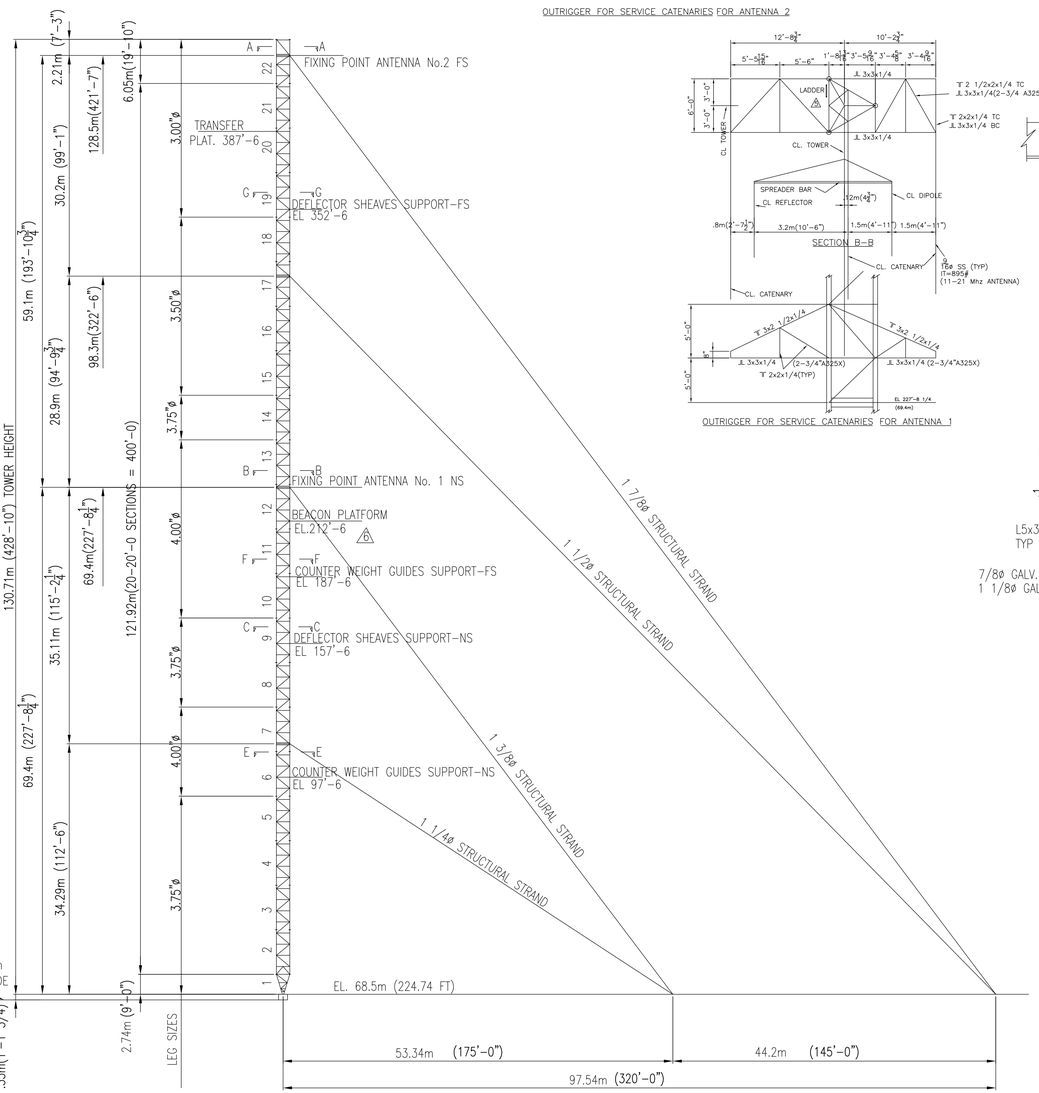

ELEVATION TOWER 2

TOWER-2

OUTRIGGER FOR SERVICE CATENARIES FOR ANTENNA 1

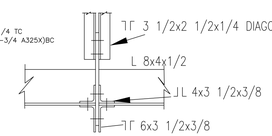

SECTION H-H

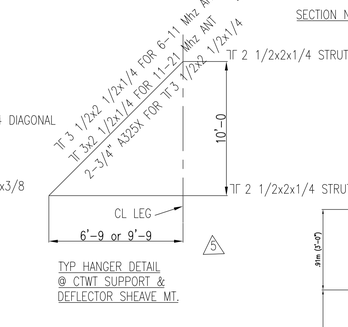

TYP HANGER DETAIL
@ CTWT SUPPORT &
DEFLECTOR SHEAVE MT.

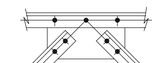

STRUT DETAIL @ EL 12'-6

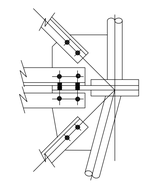

TYPICAL WEB DETAILS

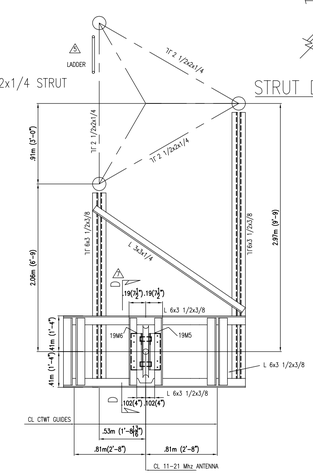

COUNTER WEIGHT GUIDE SUPPORT EL 97'-6
SECTION E-E

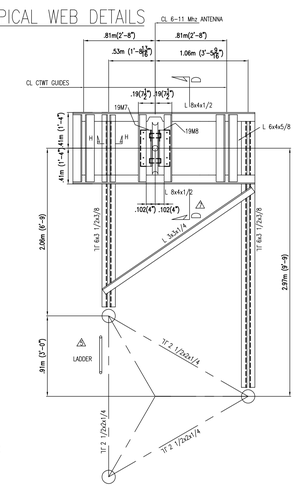

COUNTER WEIGHT GUIDE SUPPORT EL 187'-6
SECTION F-F

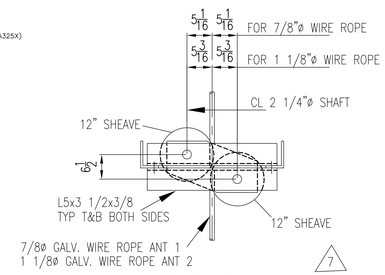

SECTION D-D

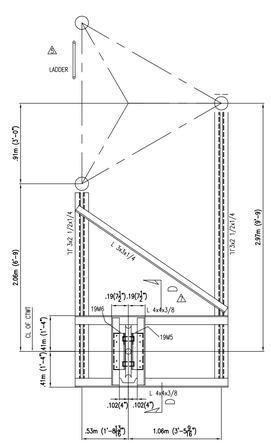

DEFLECTOR SHEAVE MOUNT EL 157'-6
SECTION C-C

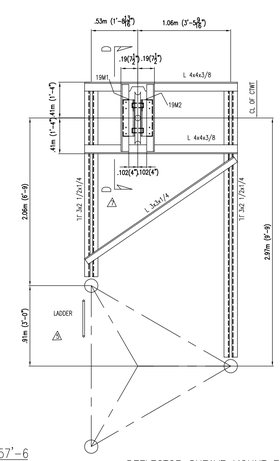

DEFLECTOR SHEAVE MOUNT EL 352'-6
SECTION G-G

NOTES:
1. SEE DRAWING No. SK-243-AT-001 FOR TOWER SPECIFICATIONS
2. SEE DRAWING No. SK-243-AT-007 & 008 FOR STANDARD TOWER DETAILS AND FIXING POINT MOUNT DETAILS
3. ALL CONNECTIONS HAVE TWO 5/8 A325X BOLTS WITH ANCO LOCK NUTS UNLESS NOTED
4. ALL GUSSETS PLATES 3/8" UNLESS NOTED
5. ALL WELDS 1/4" FF UNLESS NOTED
6. 12" SHEAVES ARE Mc KISSICK ROLL FORGED SHEAVES-No. 0462671 FOR 7/8" WIRE ROPE AND No. 0462699 FOR 1 1/8" WIRE ROPE

AS BUILT DRAWING

REV	DESCRIPTION	DATE	APPD.
7	SECTION D-D	6/25/98	
6	ADDED BEACON PLATFORM ELEV.	1/14/98	
5	HANGER DETAIL, LADDER LOCATION	12/18/97	
4	GENERAL REVISIONS	9/14/97	
3	GENERAL REVISIONS	8/12/97	
2	GENERAL REVISIONS	7/14/97	
1	GENERAL REVISIONS	5/25/97	

REVISION

		DATE
DRAWN	CSCD	
CHK. BY	FLA	4/30/97
ENGR.	FLA	4/30/97
ENGR. CHK.		

APPROVALS

PROJ. MANAGER _____
SYSTEMS ENGR. _____

VOA VOICE OF AMERICA

VOICE OF AMERICA
ENGINEERING & TECHNICAL OPERATIONS
U.S. INFORMATION AGENCY
WASHINGTON, D.C. 20547

MARIANA RADIO RELAY STATION
STRUCTURAL DETAILS OF TOWER #2
ISLAND OF TINIAN, COMMONWEALTH OF
THE NORTHERN MARIANA ISLANDS

PROJ. NO.	FSCM NO. 06310	DWG. NO. SK-243-AT-003
CONTR. NO.	SCALE:	SHEET 3 OF 15

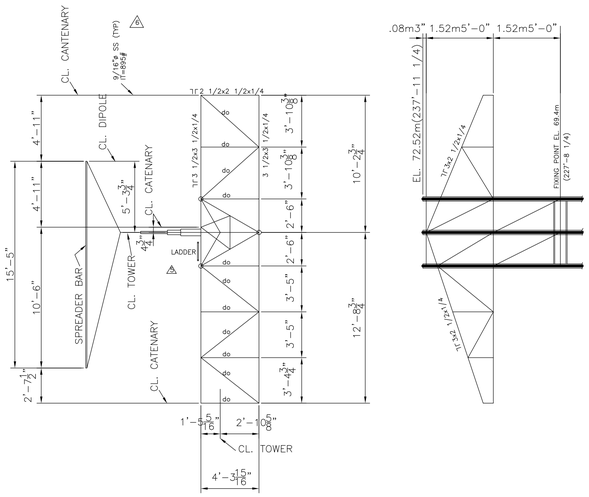

OUTRIGGER FOR SERVICE CATENARIES
SECTION A–A

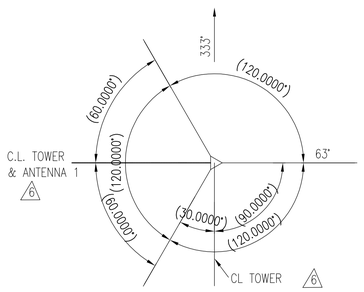

GUY PLAN

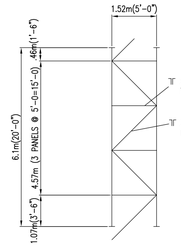

TYPICAL SECTION

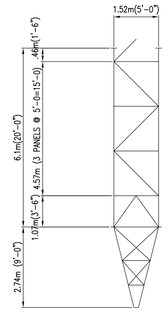

TOWER ELEVATION

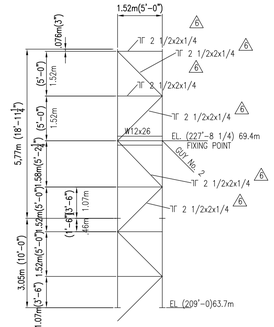

TOP TWO SECTIONS

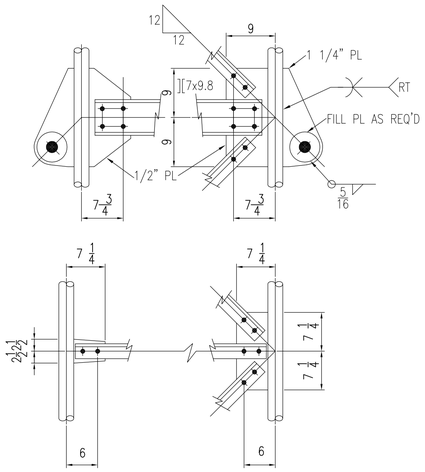

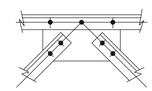

STRUT DETAIL @ EL. 12'-6"

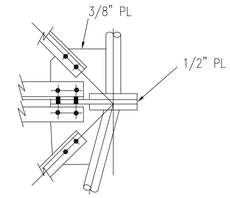

TYPICAL WEB DETAILS

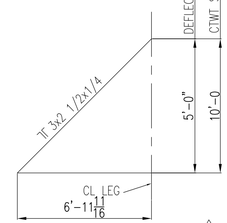

TYP HANGER DETAIL
@ CTWT SUPPORT &
DEFLECTOR SHEAVE MT.

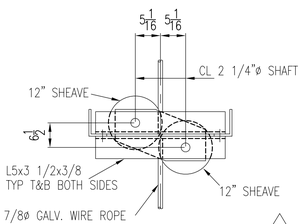

SECTION D–D

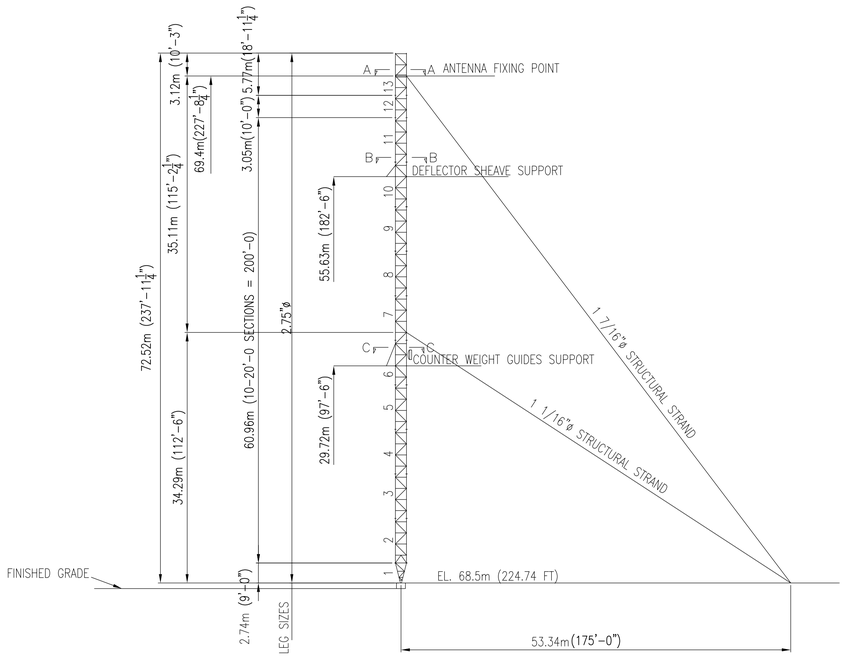

ELEVATION TOWER ONE

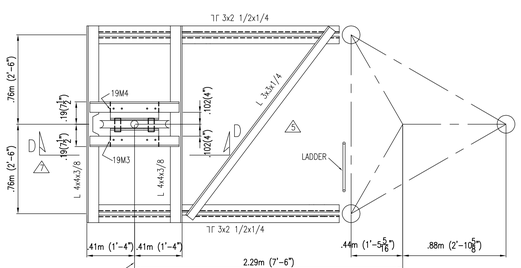

SECTION B–B
DEFLECTOR SHEAVE MOUNT
EL. 182'-6

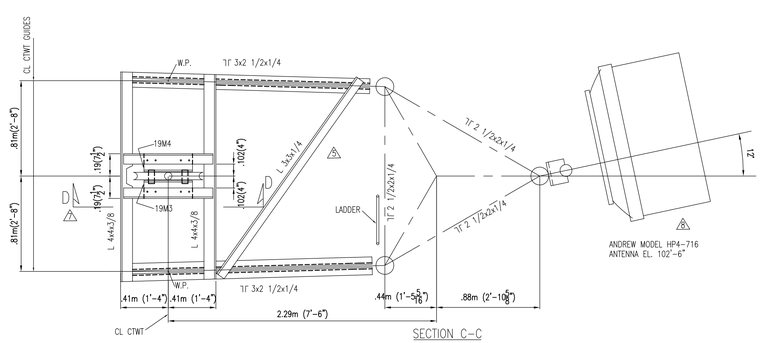

SECTION C–C
COUNTER WEIGHT–SUPPORT
EL 97'-6

AS BUILT DRAWING

NOTES:
1. SEE DRAWING No. SK-243-AT-001 FOR TOWER SPECIFICATIONS
2. SEE DRAWING No. SK-243-AT-007 & 008 FOR STANDARD TOWER DETAILS AND FIXING POINT MOUNT DETAILS
3. ALL CONNECTIONS HAVE TWO 5/8 A325X BOLTS WITH ANCO LOCK NUTS UNLESS NOTED
4. ALL GUSSETS PLATES 3/8" UNLESS NOTED
5. ALL WELDS 1/4" FF UNLESS NOTED
6. 12" SHEAVES ARE Mc KISSICK ROLL FORGED SHEAVES No. 042671 FOR 7/8" WIRE ROPE

REV	DESCRIPTION	DATE	APPD.
8	ADDED ANDREW HP4-71G DISH AT EL. 102'-6	12/6/99	
7	SECTION D-D	6/25/98	
6	ADDED SECTION No.s REVISED GUY PLAN,ADDED SIZES @TOP SECTION, ADDED I.T.	1/14/98	
5	TYP HANGER DETAIL, OUTRIGGER DETAIL SECT A-A, & LOCATION OF LADDER	12/29/97	
4	GENERAL REVISIONS	9/14/97	
3	GENERAL REVISIONS	8/12/97	
2	GENERAL REVISIONS	7/14/97	
1	GENERAL REVISIONS	5/25/97	

REVISION

		DATE
DRAWN	CSCD	
CHK. BY	FLA	4/30/97
ENGR.	FLA	4/30/97
ENGR. CHK.		

APPROVALS

PROJ. MANAGER _____
SYSTEMS ENGR. _____

VOICE OF AMERICA
ENGINEERING & TECHNICAL OPERATIONS
U.S. INFORMATION AGENCY
WASHINGTON, D.C. 20547

MARIANA RADIO RELAY STATION
STRUCTURAL DETAILS OF TOWER #1
ISLAND OF TINIAN, COMMONWEALTH OF
THE NORTHERN MARIANA ISLANDS

PROJ. NO.	FSCM NO. 06310	DWG. NO.	SK-243-AT-002
CONTR. NO.	SCALE:	SHEET 2	OF 15

INITIAL TENSION SCHEDULE FOR COUNTER WEIGHT GUIDE CABLE	
ANTENNA No.	INITIAL TENSION
5	6,500#
7	10,000#
8	4,500#

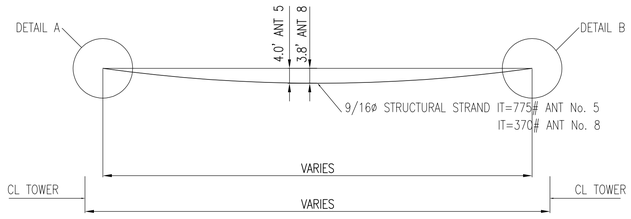

ANTENNAS No. 5 & 8

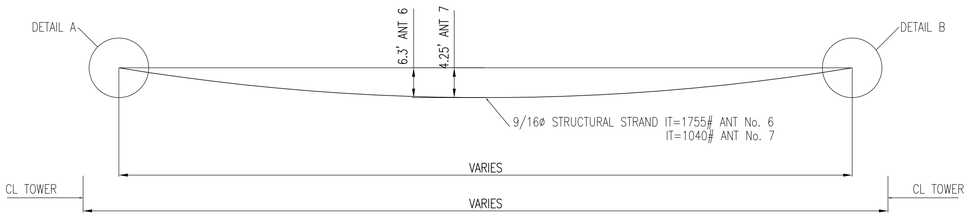

ANTENNAS No. 6 & 7

1 SERVICE CATENARIES DETAIL

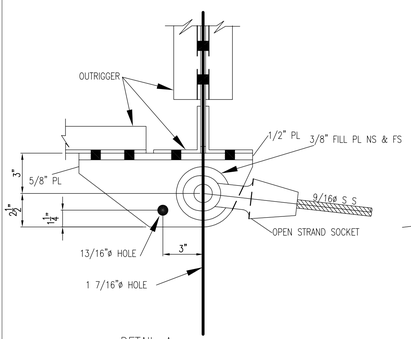

DETAIL-A

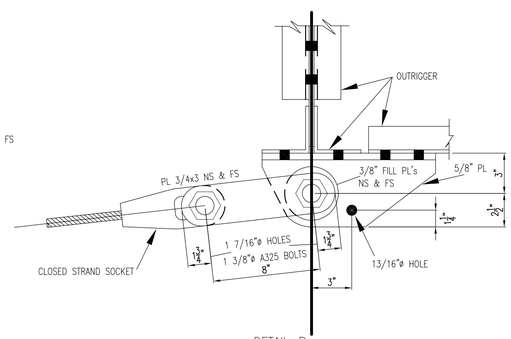

DETAIL-B

CATENARY CONNECTION DETAILS

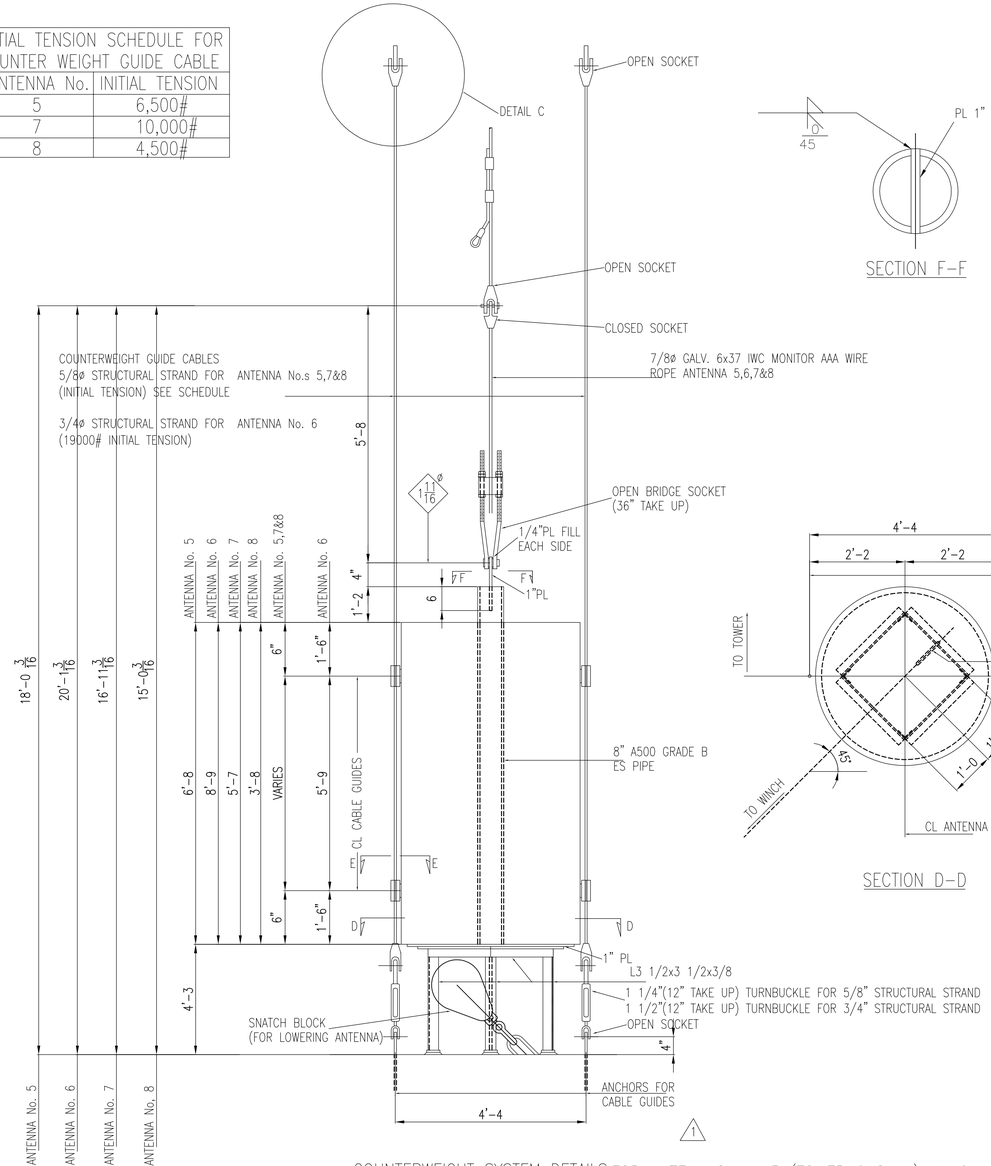

COUNTERWEIGHT SYSTEM DETAILS FOR ANTENNAS No. 5 (TOWER 6 ONLY), No.6, No.7, & No. 8

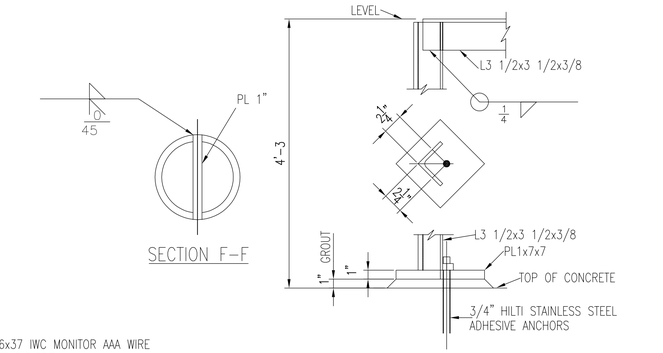

SECTION F-F

TYPICAL DETAIL OF COUNTERWEIGHT SUPPORT

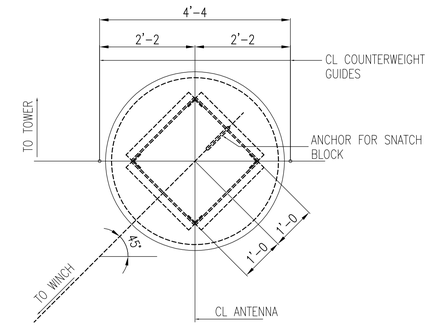

SECTION D-D

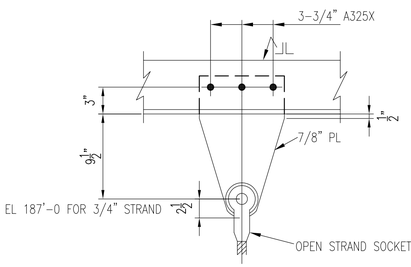

DETAIL-C TYP FOR 3/4&5/8 STRUCTURAL STRAND FOR TOWERS No. 6,7,8 & 9

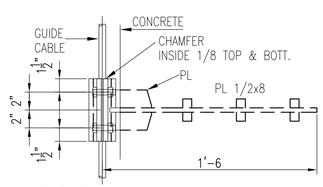

SECTION F-F

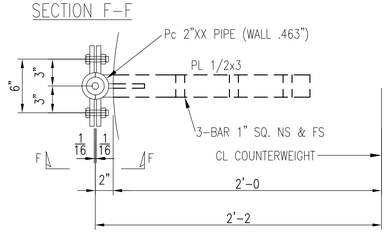

1 SECTION E-E

COUNTERWEIGHT CABLE GUIDE DETAILS

NOTES: 1. SEE DRAWING No. SK-243-AT-001 FOR TOWER SPECIFICATIONS

AS BUILT DRAWING

REV	DESCRIPTION	DATE	APPD.
1	COUNTER SYSTEM DETAIL, CATENARY IT	1/8/98	

REVISION

		DATE
DRAWN	CSCD	10/18/97
CHK. BY	FLA	10/18/97
ENGR.	FLA	10/18/97
ENGR. CHK.		

VOICE OF AMERICA
ENGINEERING & TECHNICAL OPERATIONS
U.S. INFORMATION AGENCY
WASHINGTON, D.C. 20547

APPROVALS

PROJ. MANAGER
SYSTEMS ENGR.

MARIANA RADIO RELAY STATION
CATENARIES AND COUNTER WEIGHT SYSTEM DETAILS
ISLAND OF TINIAN, COMMONWEALTH OF THE NORTHERN MARIANA ISLANDS

PROJ. NO.	FSCM NO. 06310	DWG. NO. SK-243-AT-015
CONTR. NO.	SCALE:	SHEET 15 OF 15

REVISIONS				
ZONE	REV	DESCRIPTION	DATE	APPROVED

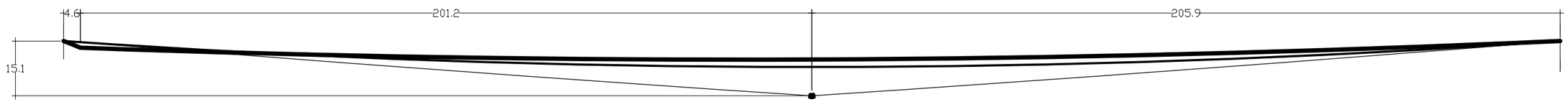

Trolley

Unloaded Line

End loaded Line

Mid–point loaded line

Tinian Maintenance Catenary, Antenna #2
Deflected Shape

Calculated 7–May–2001	SIZE	FSCM NO.	DWG NO. Sketch –1	REV
BAH	SCALE 1: 30		SHEET	

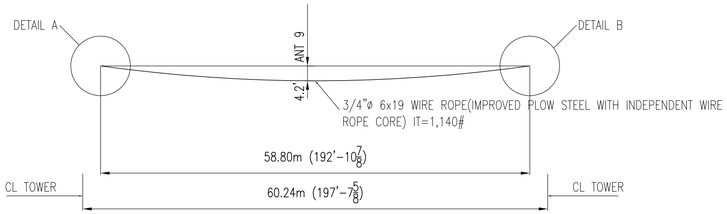

ANTENNA No. 9

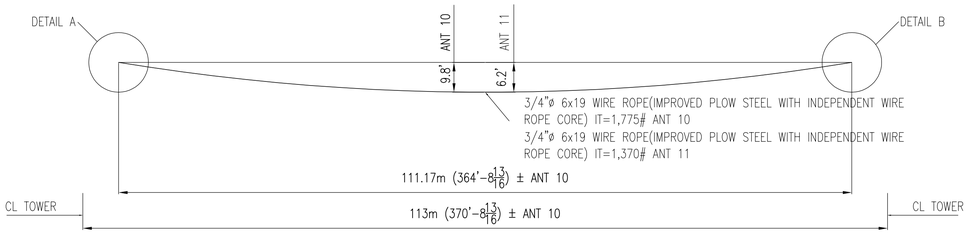

ANTENNA No. 10 & No. 11

SERVICE CATENARIES DETAIL

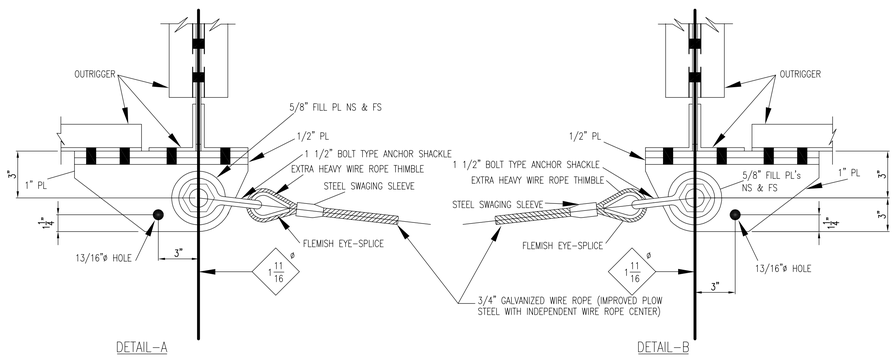

ANTENNAS No. 9, 10 & 11
CATENARY CONNECTION DETAILS

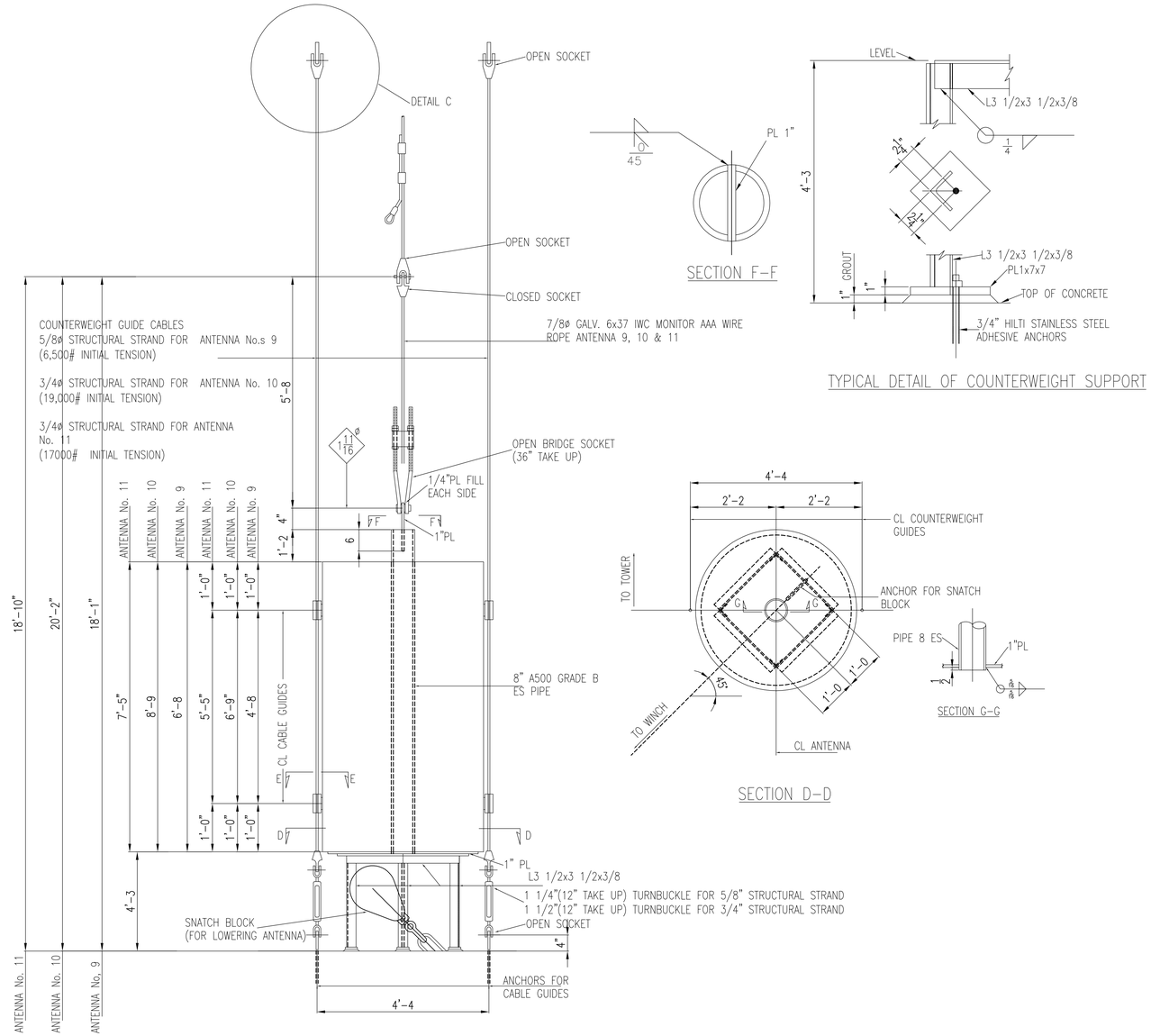

COUNTERWEIGHT SYSTEM DETAILS FOR ANTENNAS No. 9, 10 & 11

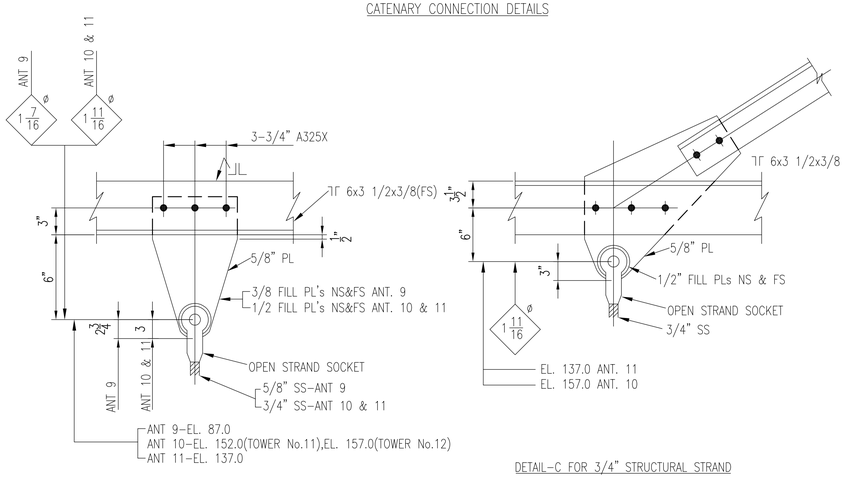

DETAIL-C TYP FOR 3/4&5/8 STRUCTURAL STRAND FOR TOWERS No. 10,11 & 13

DETAIL-C FOR 3/4" STRUCTURAL STRAND TOWERS No. 12

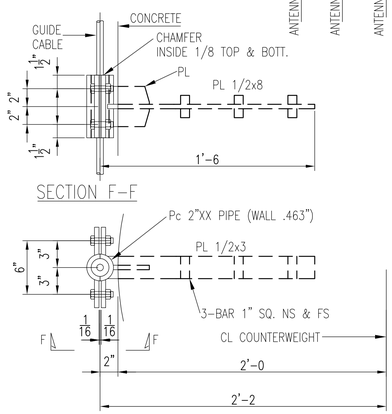

COUNTERWEIGHT CABLE GUIDE DETAILS

NOTES: 1. SEE DRAWING No. 1 FOR TOWER SPECIFICATIONS

AS BUILT DRAWING

REV	DESCRIPTION	DATE	APPD.

REVISION

		DATE
DRAWN	CSCD	11/14/98
CHK. BY	FLA	11/14/98
ENGR.	FLA	11/14/98
ENGR. CHK.		

APPROVALS

PROJ. MANAGER
SYSTEMS ENGR.

INTERNATIONAL BROADCASTING BUREAU
ENGINEERING & TECHNICAL OPERATIONS
U.S. INFORMATION AGENCY
WASHINGTON, D.C. 20547

MARIANA RADIO RELAY STATION
CATENARIES AND COUNTER WEIGHT SYSTEM DETAILS
ISLAND OF TINIAN, COMMONWEALTH OF
THE NORTHERN MARIANA ISLANDS

PROJ. NO. 3001-2	FSCM NO. 06310	DWG. NO.
CONTR. NO.	SCALE:	SHEET 7 OF 8

SAYED HAMID BEHBEHANI & SONS CO. W.L.L.

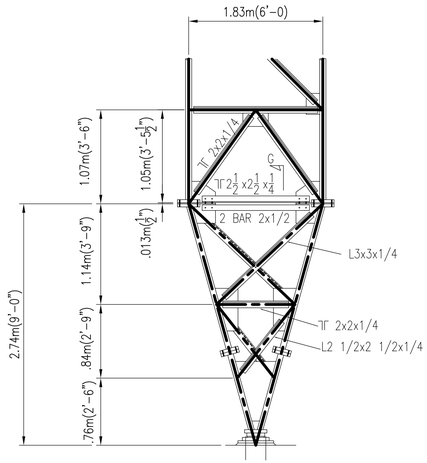

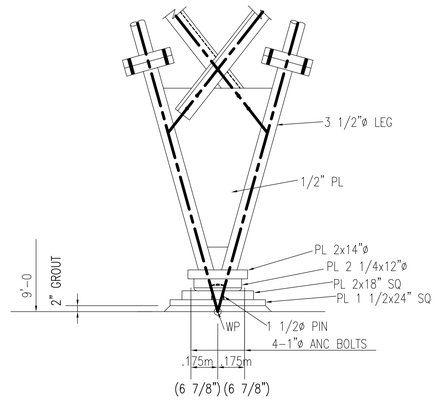

TOWER No's 10,11,12 & 13 BASE SECTION DETAIL

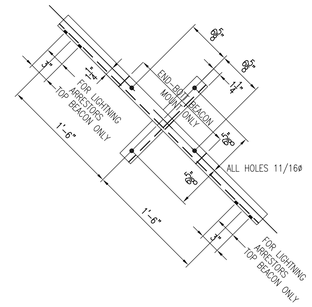

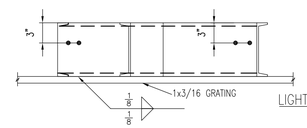

STROBE BEACON MOUNT DETAIL

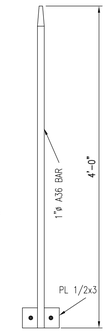

LIGHTNING ARRESTOR DETAIL

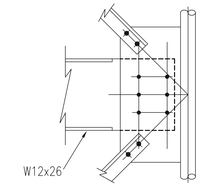

TYPICAL END DETAIL

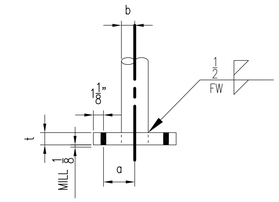

t = 1.25"	6-5/8" A325 BOLTS			
TOWER NO.	LEG ø RANGE	a	b_{min}	FW
10	2.5 to 2.5	3.0	1.25	.3125
	2.5 to 3.0	3.0	1.25	.3125
	3.0 to 3.0	3.0	1.5	.3125
	3.0 to 3.5	3.25	1.5	.3125
11	3.0 to 3.0	3.0	1.5	.3125
	3.0 to 3.5	3.25	1.5	.3125
	3.5 to 3.5	3.25	1.75	.3125
12	3.0 to 3.0	3.0	1.5	.3125
	3.0 to 3.5	3.25	1.5	.3125
	3.5 to 3.5	3.25	1.75	.3125
13	3.0 to 3.0	3.0	1.5	.3125
	3.0 to 3.25	3.25	1.5	.3125
	3.25 to 3.5	3.25	1.625	.3125

LEG SPLICE DETAIL & SCHEDULE

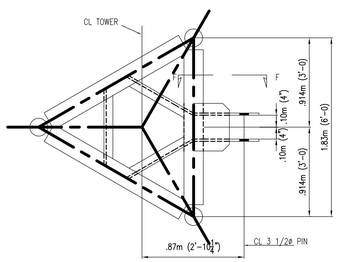

TOWER No. 10 ANTENNA No. 9

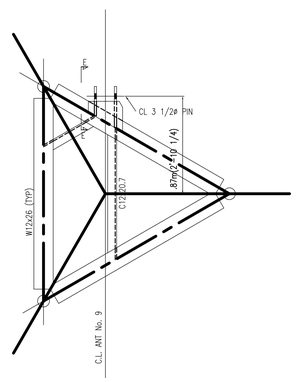

TOWER No. 11 ANTENNA No. 9

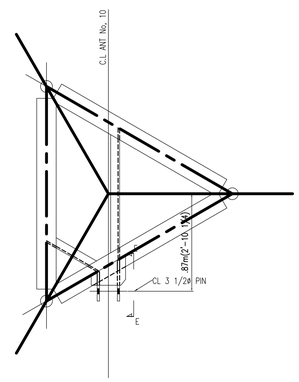

TOWER No. 11 ANTENNA No. 10

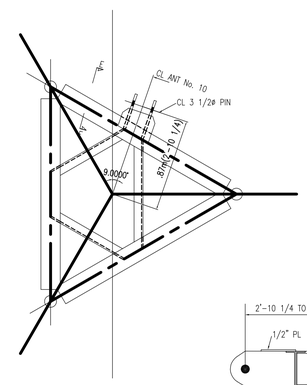

TOWER No. 12 ANTENNA No. 10

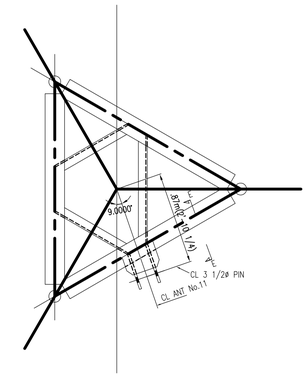

TOWER No. 12 ANTENNA No. 11

FIXING MOUNT DETAILS

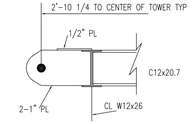

SECTION E-E

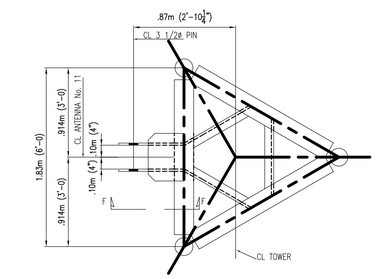

TOWER No. 13 ANTENNA No. 11

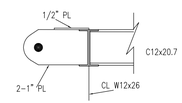

SECTION F-F

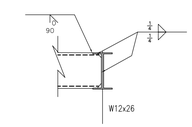

SECTION A-A

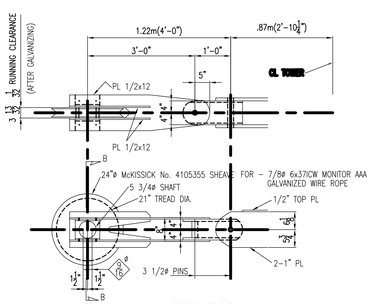

ANTENNAS 9, 10, & 11 SUPPORT ASSEMBLE

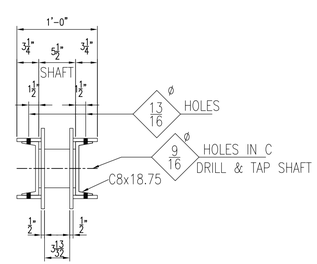

SECTION B-B

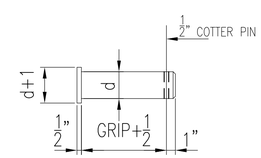

TYPICAL PIN DETAIL

NOTES: 1. ALL CONNECTIONS HAVE TWO 5/8 A325X BOLTS WITH ANCO LOCK NUTS U.N.
2. ALL PINS SHALL BE GRADE 4140 ANNEALED AND GALVANIZED AFTER FABRICATION (MIN Fy=50 KSI)
3. ALL COTTER PINS SHALL BE AISI TYPE 305 or 316 STAINLESS STEEL

AS BUILT DRAWING

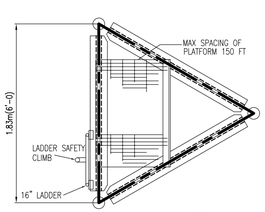

TYPICAL PLATFORM SECTION

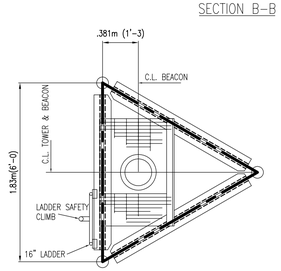

TYPICAL TOWER TOP BEACON PLATFORM

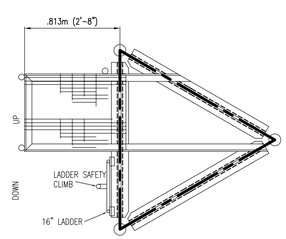

TYPICAL TRANSFER PLATFORM

REV	DESCRIPTION	DATE	APPD.
1	DELETE OBSTRUCTION LIGHT PLATFORM REQUIREMENTS	1/25/99	

REVISION

		DATE
DRAWN	CSCD	11/14/98
CHK. BY	FLA	11/14/98
ENGR.	FLA	11/14/98
ENGR. CHK.		

APPROVALS

PROJ. MANAGER
SYSTEMS ENGR.

INTERNATIONAL BROADCASTING BUREAU
ENGINEERING & TECHNICAL OPERATIONS
U.S. INFORMATION AGENCY
WASHINGTON, D.C. 20547

MARIANA RADIO RELAY STATION
TYPICAL STRUCTURAL DETAILS
ISLAND OF TINIAN, COMMONWEALTH OF
THE NORTHERN MARIANA ISLANDS

PROJ. NO. 3001-2
FSCM NO. 06310
DWG. NO.
CONTR. NO.
SCALE:
SHEET 6 OF 8

SAYED HAMID BEHBEHANI & SONS CO. W.L.L.

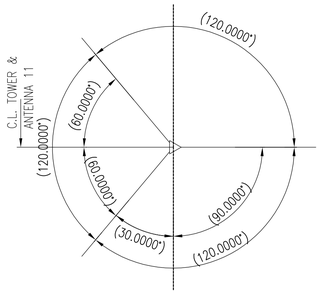

GUY PLAN

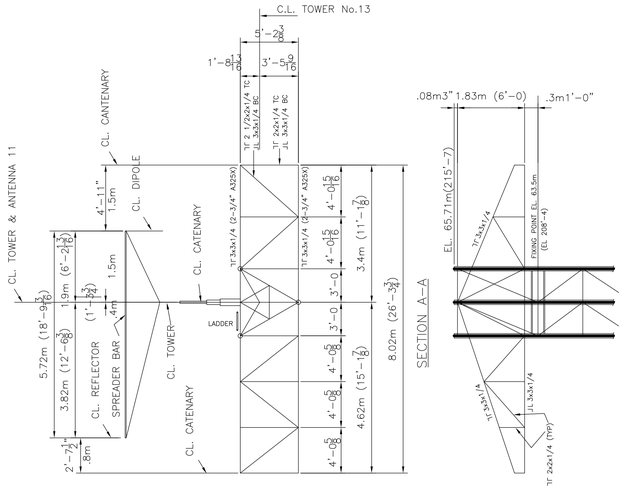

OUTRIGGER FOR ANTENNA No.11 – TOWER No.13

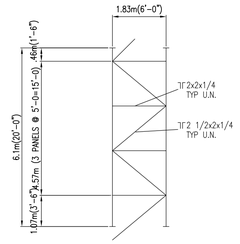

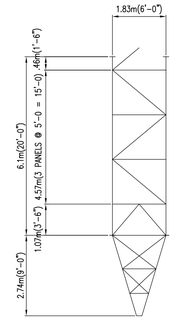

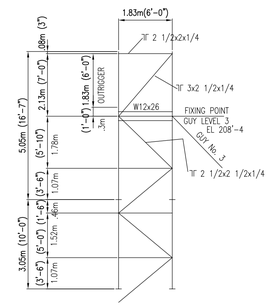

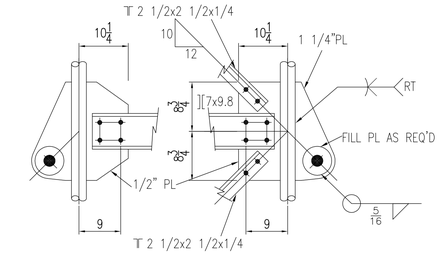

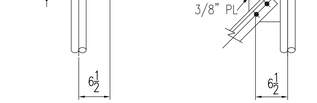

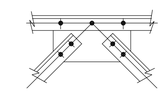

STRUT DETAIL @ EL 12'-6

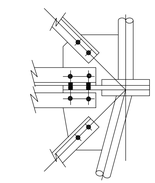

TYPICAL WEB DETAILS

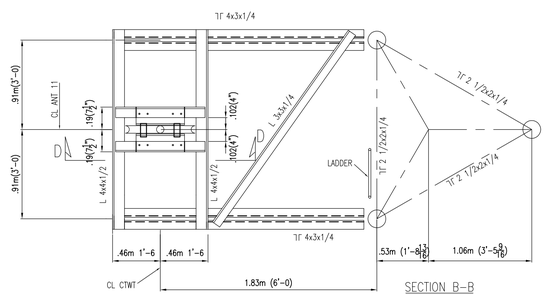

SECTION B-B
DEFLECTOR SHEAVE MOUNT
EL. 157'-6

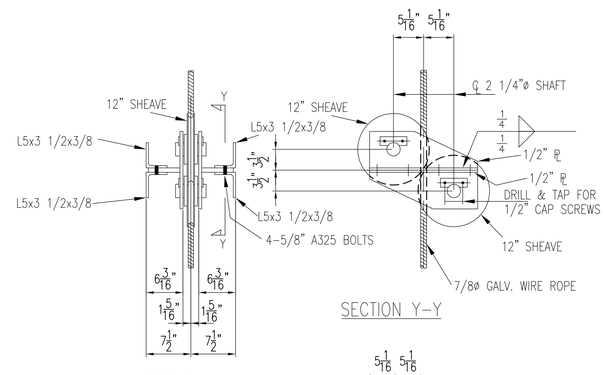

SECTION Y-Y

SECTION X-X

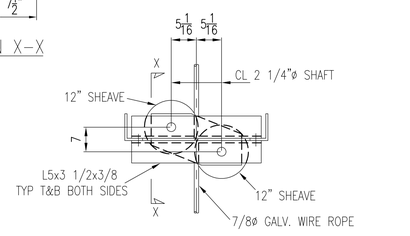

SECTION D-D

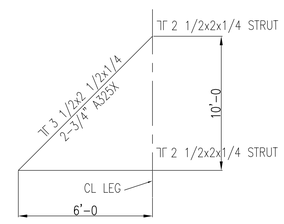

TYP HANGER DETAIL
@ CTWT SUPPORT &
DEFLECTOR SHEAVE MT.

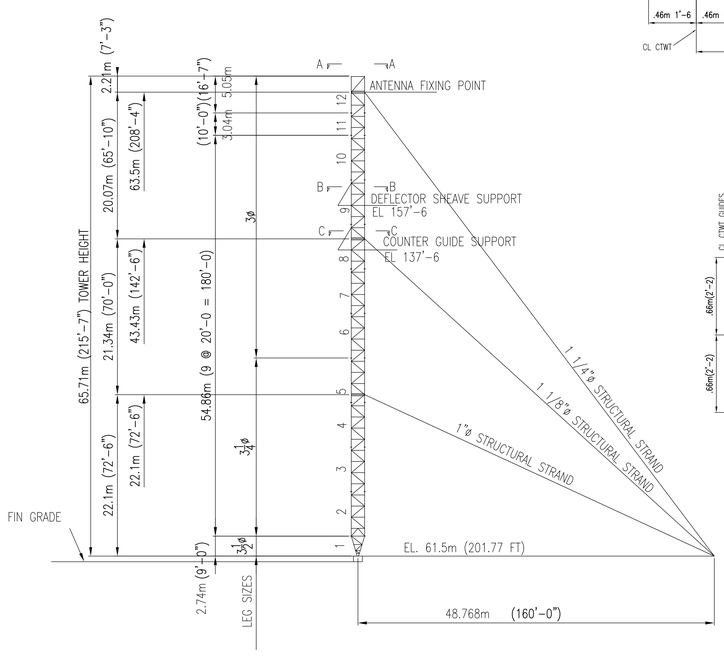

ELEVATION TOWER 13

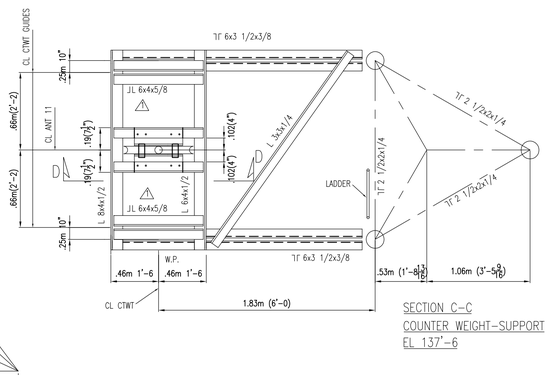

SECTION C-C
COUNTER WEIGHT-SUPPORT
EL 137'-6

NOTES:
1. SEE DRAWING No. 1 FOR TOWER SPECIFICATIONS
2. SEE DRAWING No. 6,7 & 8 FOR STANDARD TOWER DETAILS AND FIXING POINT MOUNT DETAILS
3. ALL CONNECTIONS HAVE TWO 5/8 A325X BOLTS WITH ANCO LOCK NUTS UNLESS NOTED
4. ALL GUSSETS PLATES 3/8" UNLESS NOTED
5. ALL WELDS 1/4" FF UNLESS NOTED
6. 12" SHEAVES ARE Mc KISSICK ROLL FORGED SHEAVES–No. 0462671 FOR 7/8" WIRE ROPE

AS BUILT DRAWING

REV	DESCRIPTION	DATE	APPD.
1	ADDED ANGLE SIZES @ SECTION C-C	1/25/99	

REVISION

		DATE
DRAWN	CSCD	11/14/98
CHK. BY	FLA	11/14/98
ENGR.	FLA	11/14/98
ENGR. CHK.		

APPROVALS

PROJ. MANAGER
SYSTEMS ENGR.

INTERNATIONAL BROADCASTING BUREAU
ENGINEERING & TECHNICAL OPERATIONS
U.S. INFORMATION AGENCY
WASHINGTON, D.C. 20547

MARIANA RADIO RELAY STATION
STRUCTURAL DETAILS OF TOWER #13
ISLAND OF TINIAN, COMMONWEALTH OF
THE NORTHERN MARIANA ISLANDS

PROJ. NO. 3001-2
FSCM NO. 06310
DWG. NO.
CONTR. NO.
SCALE:
SHEET 5 OF 8

SAYED HAMID BEHBEHANI & SONS CO. W.L.L.

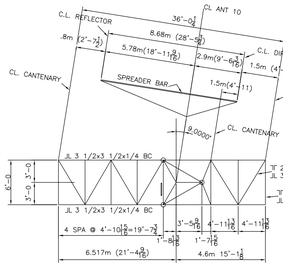

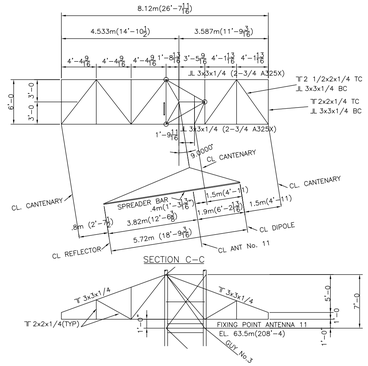

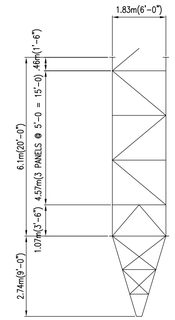

TOWER ELEVATION

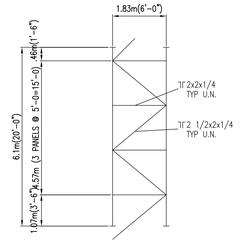

TYPICAL SECTION

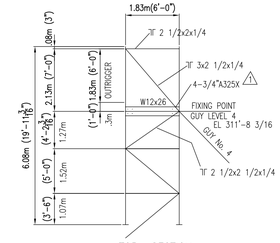

TOP SECTION

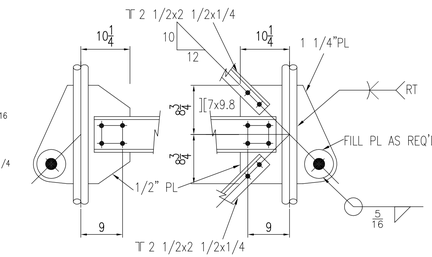

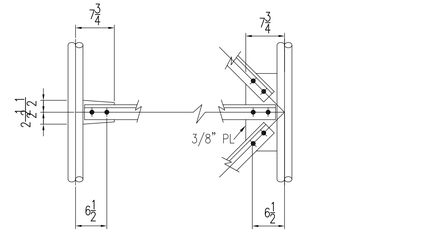

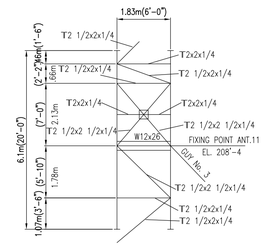

SECTION 12

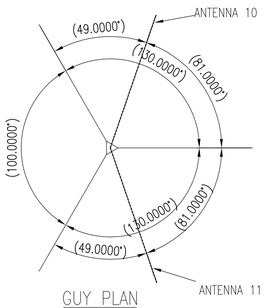

GUY PLAN

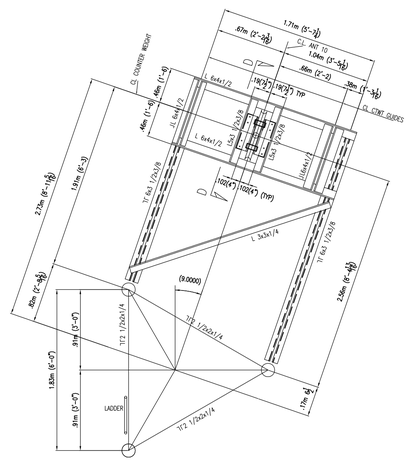

SECTION D-D
COUNTERWEIGHT GUIDE
SUPPORT ANT 10 EL 157'-6

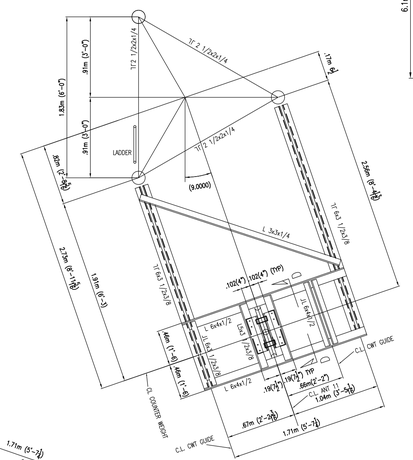

SECTION E-E
DEFLECTOR SHEAVES
& CWT GUIDES SUPPORT
ANT 11 EL. 137'-6

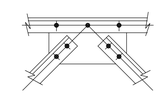

STRUT DETAIL @ EL 12'-6

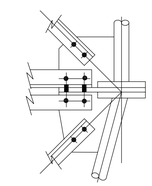

TYPICAL WEB DETAILS

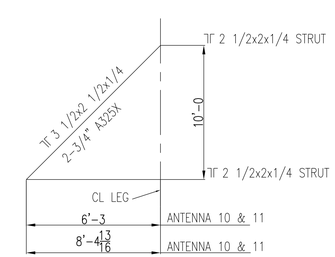

TYP HANGER DETAIL
@ CTWT SUPPORT &
DEFLECTOR SHEAVE MT.

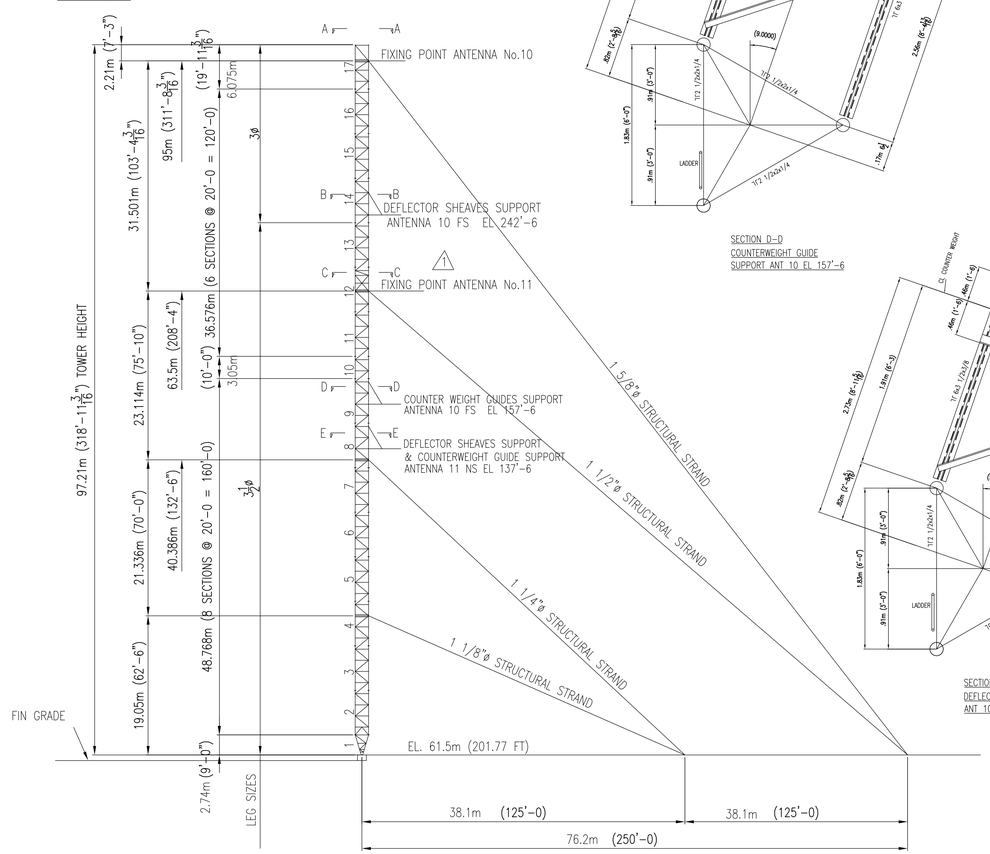

ELEVATION TOWER 12

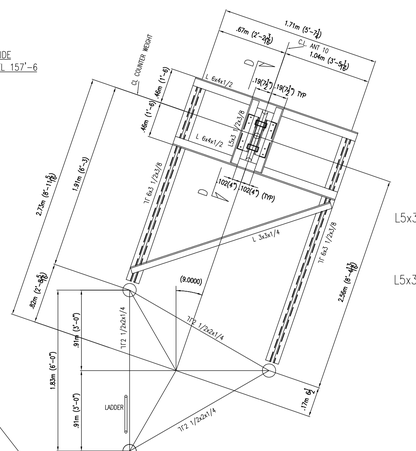

SECTION B-B
DEFLECTOR SHEAVES MOUNT
ANT 10 EL 242'-6

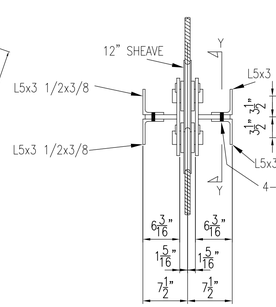

SECTION X-X

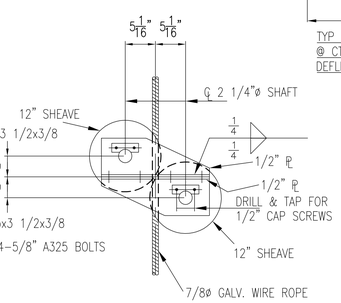

SECTION Y-Y

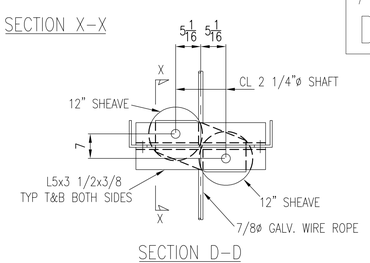

SECTION D-D

NOTES:
1. SEE DRAWING No. 1 FOR TOWER SPECIFICATIONS
2. SEE DRAWING No. 6,7 & 8 FOR STANDARD TOWER DETAILS AND FIXING POINT MOUNT DETAILS
3. ALL CONNECTIONS HAVE TWO 5/8 A325X BOLTS WITH ANCO LOCK NUTS UNLESS NOTED
4. ALL GUSSETS PLATES 3/8" UNLESS NOTED
5. ALL WELDS 1/4" FF UNLESS NOTED
6. 12" SHEAVES ARE Mc KISSICK ROLL FORGED SHEAVES-No. 0462671 FOR 7/8" WIRE ROPE

AS BUILT DRAWING

REV	DESCRIPTION	DATE	APPD.
1	REMOVE FUTURE @ ANTENNA No.11 FIXING POINT EL. 63.5m & CHANGE 4-5/8"A325X TO 4-3/4"A325X FOR W12x26 FOR FIXING POINT FOR ANT. No.10	1/25/99	

REVISION

		DATE
DRAWN	CSCD	11/14/98
CHK. BY	FLA	11/14/98
ENGR.	FLA	11/14/98
ENGR. CHK.		

APPROVALS

PROJ. MANAGER
SYSTEMS ENGR.

INTERNATIONAL BROADCASTING BUREAU
ENGINEERING & TECHNICAL OPERATIONS
U.S. INFORMATION AGENCY
WASHINGTON, D.C. 20547

MARIANA RADIO RELAY STATION
STRUCTURAL DETAILS OF TOWER #12
ISLAND OF TINIAN, COMMONWEALTH OF
THE NORTHERN MARIANA ISLANDS

PROJ. NO. 3001-2
FSCM NO. 06310
DWG. NO.
CONTR. NO.
SCALE:
SHEET 4 OF 8

SAYED HAMID BEHBEHANI & SONS CO. W.L.L.

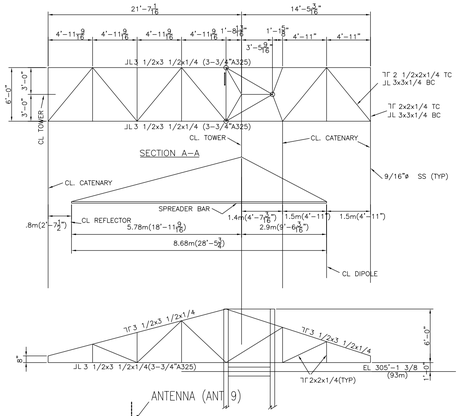

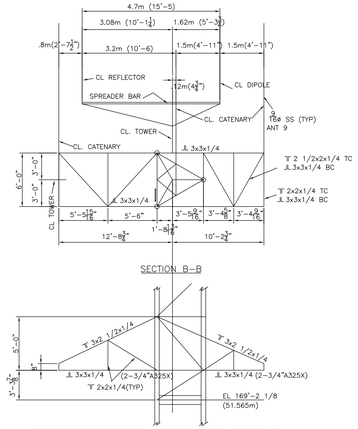

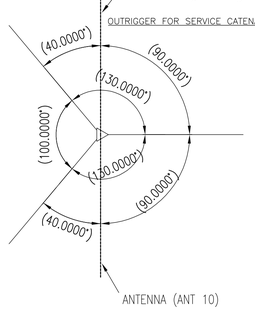

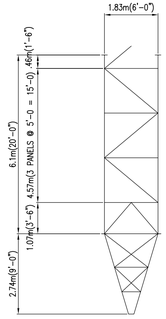

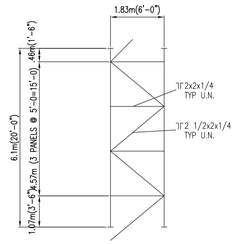

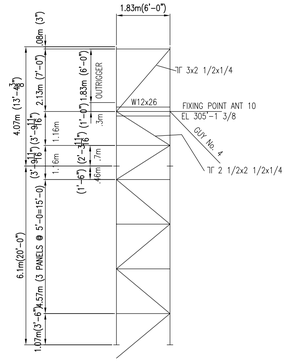

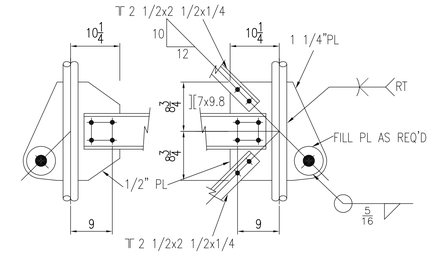

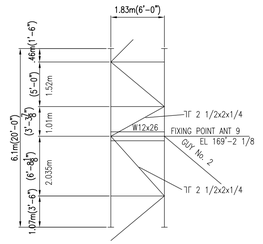

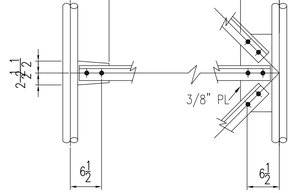

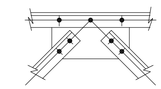

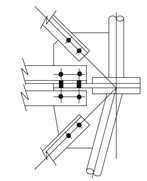

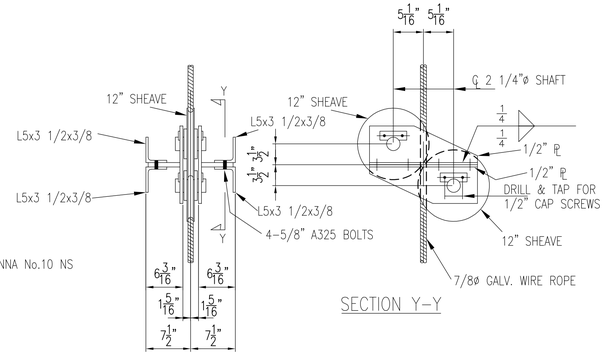

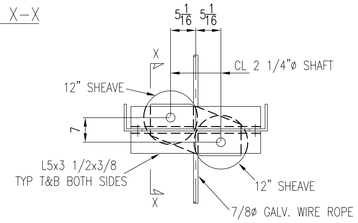

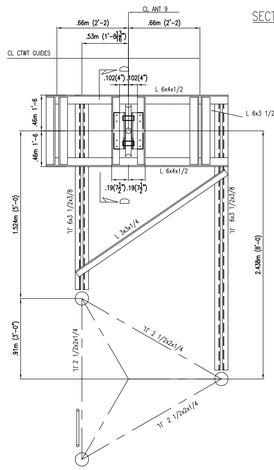

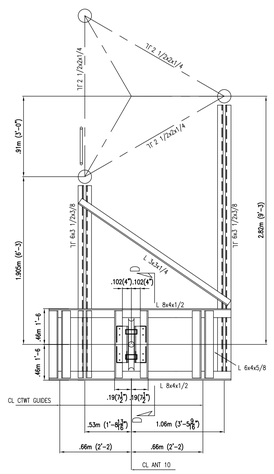

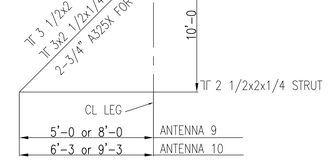

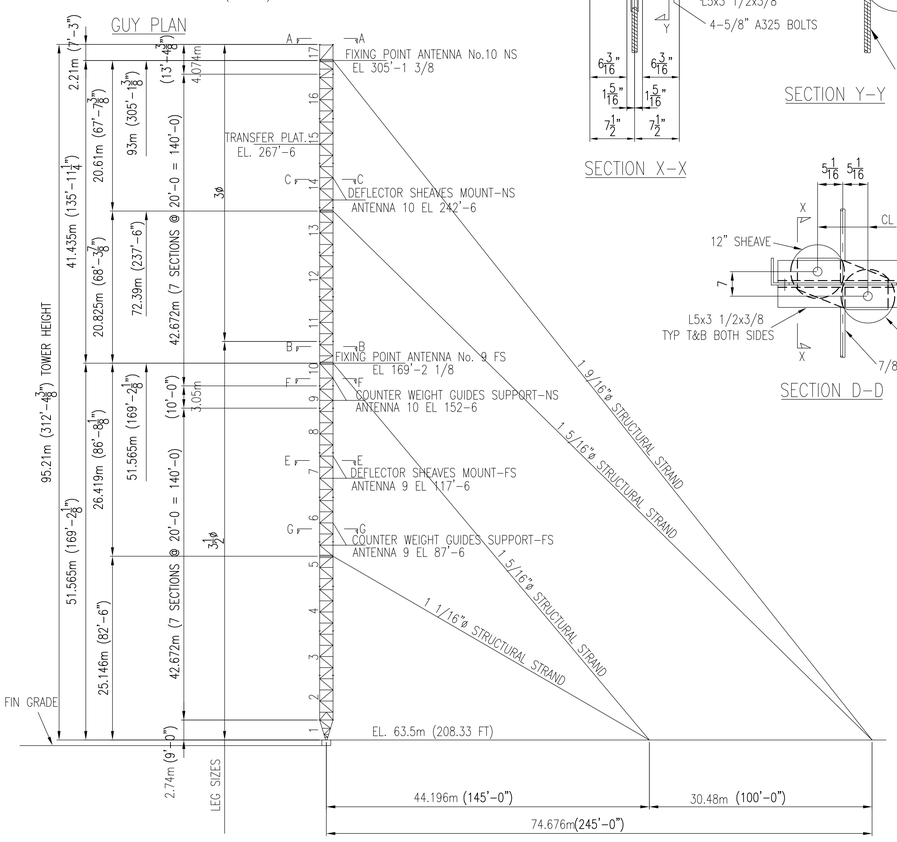

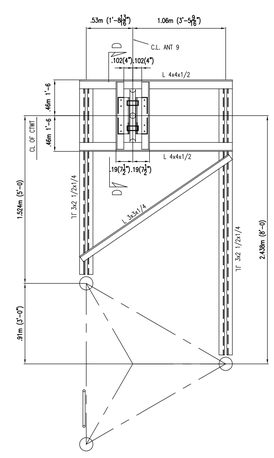

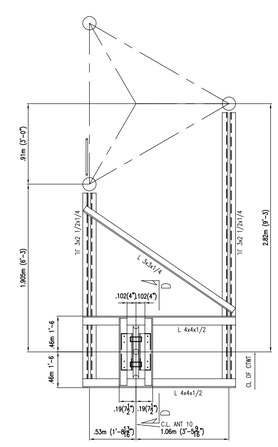

NOTES:
1. SEE DRAWING No. 1 FOR TOWER SPECIFICATIONS
2. SEE DRAWING No. 6,7 & 8 FOR STANDARD TOWER DETAILS AND FIXING POINT MOUNT DETAILS
3. ALL CONNECTIONS HAVE TWO 5/8 A325X BOLTS WITH ANCO LOCK NUTS UNLESS NOTED
4. ALL GUSSETS PLATES 3/8" UNLESS NOTED
5. ALL WELDS 1/4" FF UNLESS NOTED
6. 12" SHEAVES ARE Mc KISSICK ROLL FORGED SHEAVES–No. 0462671 FOR 7/8" WIRE ROPE

AS BUILT DRAWING

REV	DESCRIPTION	DATE	APPD.

REVISION

		DATE
DRAWN	CSCD	11/14/98
CHK. BY	FLA	11/14/98
ENGR.	FLA	11/14/98
ENGR. CHK.		

APPROVALS

PROJ. MANAGER
SYSTEMS ENGR.

IBB ENGINEERING

INTERNATIONAL BROADCASTING BUREAU
ENGINEERING & TECHNICAL OPERATIONS
U.S. INFORMATION AGENCY
WASHINGTON, D.C. 20547

MARIANA RADIO RELAY STATION
STRUCTURAL DETAILS OF TOWER #11
ISLAND OF TINIAN, COMMONWEALTH OF
THE NORTHERN MARIANA ISLANDS

PROJ. NO. 3001–2	FSCM NO. 06310	DWG. NO.
CONTR. NO.	SCALE:	SHEET 3 OF 8

SAYED HAMID BEHBEHANI & SONS CO. W.L.L.

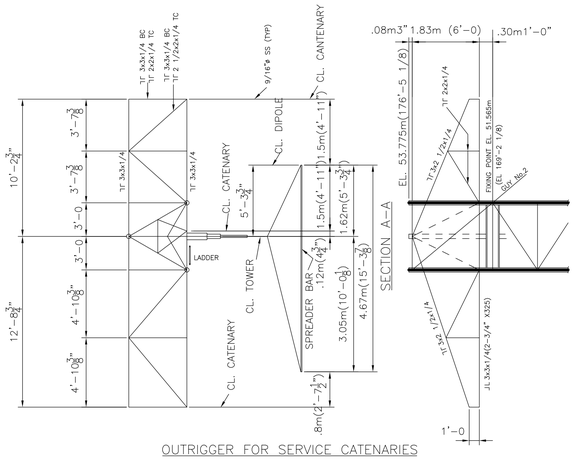

OUTRIGGER FOR SERVICE CATENARIES

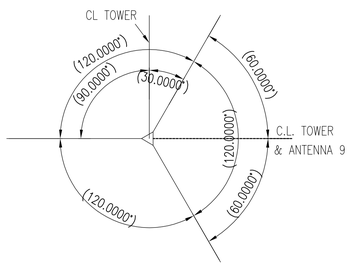

GUY PLAN

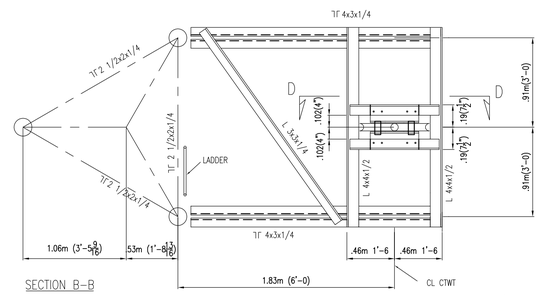

SECTION B–B
DEFLECTOR SHEAVE MOUNT
EL. 117'–6

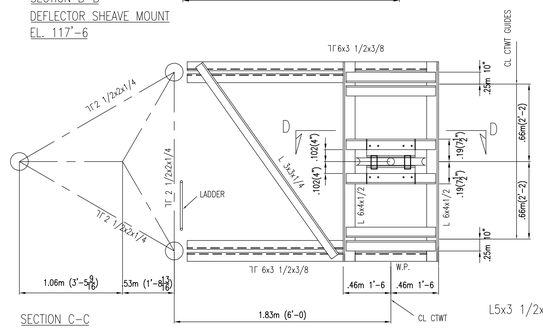

SECTION C–C
COUNTER WEIGHT–SUPPORT
EL 87'–6

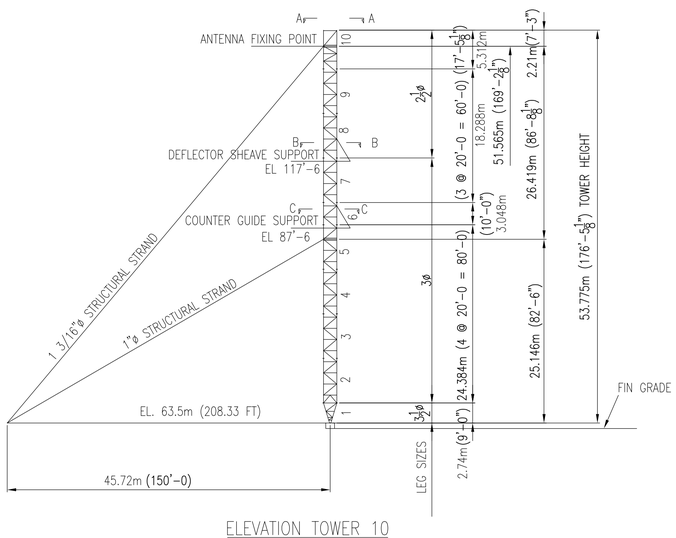

ELEVATION TOWER 10

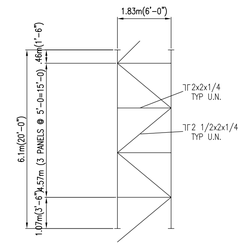

TYPICAL SECTION

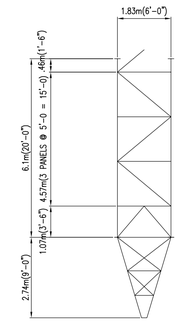

TOWER ELEVATION

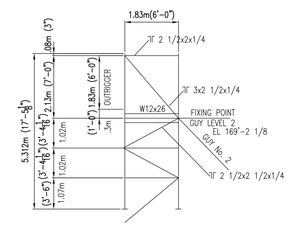

TOP SECTION

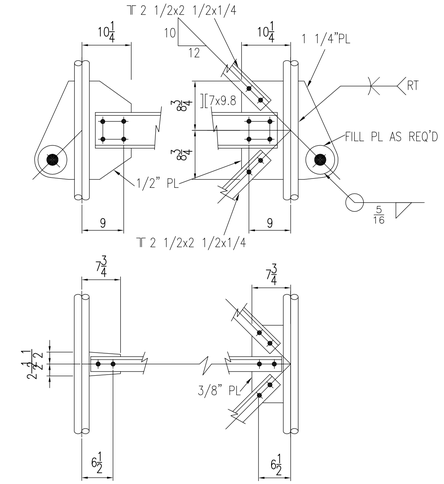

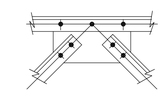

STRUT DETAIL @ EL 12'–6

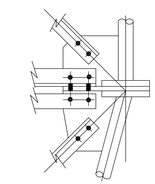

TYPICAL WEB DETAILS

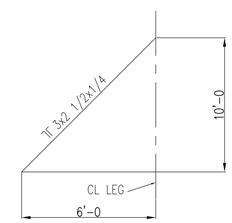

TYP HANGER DETAIL
@ CTWT SUPPORT &
DEFLECTOR SHEAVE MT.

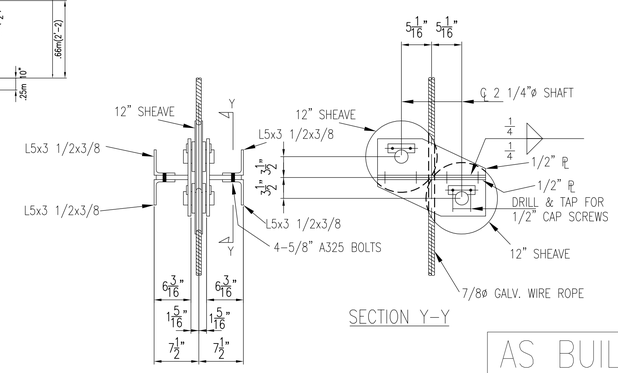

SECTION Y–Y

SECTION X–X

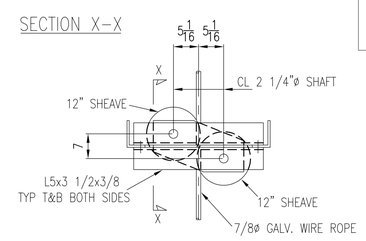

SECTION D–D

AS BUILT DRAWING

NOTES:
1. SEE DRAWING No. 1 FOR TOWER SPECIFICATIONS
2. SEE DRAWING No. 6,7 & 8 FOR STANDARD TOWER DETAILS AND FIXING POINT MOUNT DETAILS
3. ALL CONNECTIONS HAVE TWO 5/8 A325X BOLTS WITH ANCO LOCK NUTS UNLESS NOTED
4. ALL GUSSETS PLATES 3/8" UNLESS NOTED
5. ALL WELDS 1/4" FF UNLESS NOTED
6. 12" SHEAVES ARE Mc KISSICK ROLL FORGED SHEAVES–No. 0462671 FOR 7/8" WIRE ROPE

REV	DESCRIPTION	DATE	APPD.
	REVISION		

		DATE
DRAWN	CSCD	11/14/98
CHK. BY	FLA	11/14/98
ENGR.	FLA	11/14/98
ENGR. CHK.		

APPROVALS

PROJ. MANAGER
SYSTEMS ENGR.

INTERNATIONAL BROADCASTING BUREAU
ENGINEERING & TECHNICAL OPERATIONS
U.S. INFORMATION AGENCY
WASHINGTON, D.C. 20547

MARIANA RADIO RELAY STATION
STRUCTURAL DETAILS OF TOWER #10
ISLAND OF TINIAN, COMMONWEALTH OF
THE NORTHERN MARIANA ISLANDS

PROJ. NO. 3001–2	FSCM NO. 06310	DWG. NO.
CONTR. NO.	SCALE:	SHEET 2 OF 8

SAYED HAMID BEHBEHANI & SONS CO. W.L.L.

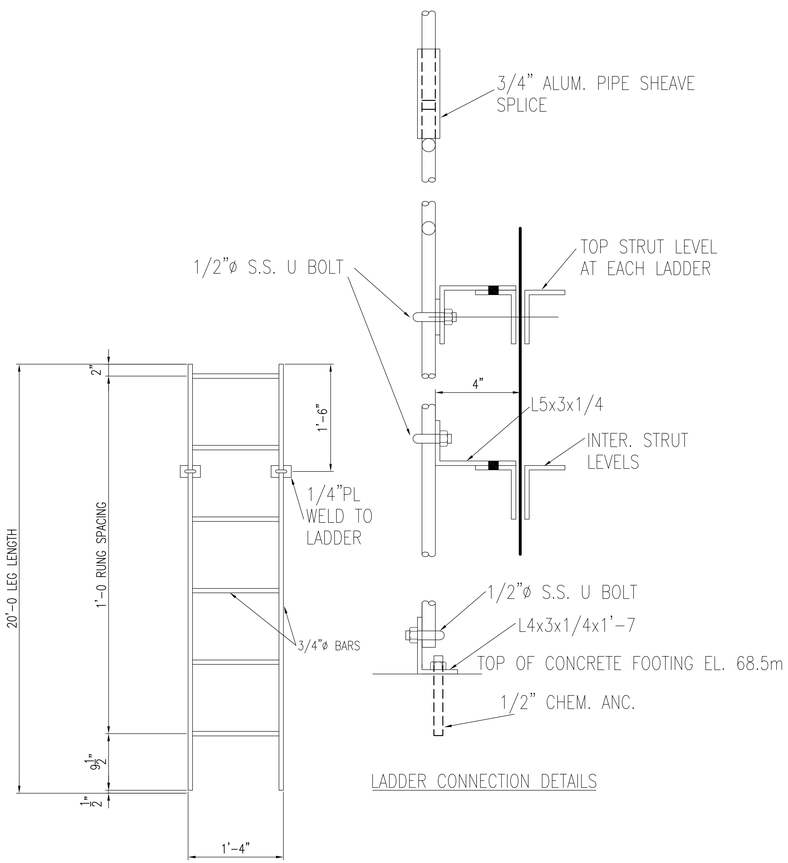

LADDER CONNECTION DETAILS

TYPICAL LADDER DETAIL

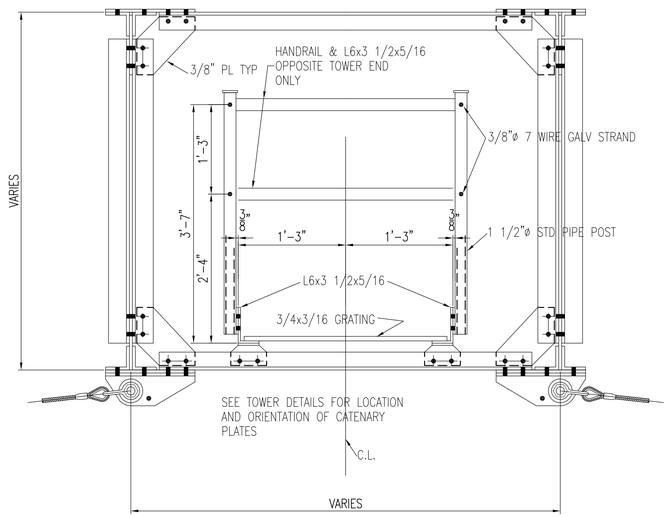

SECTION "A-A"

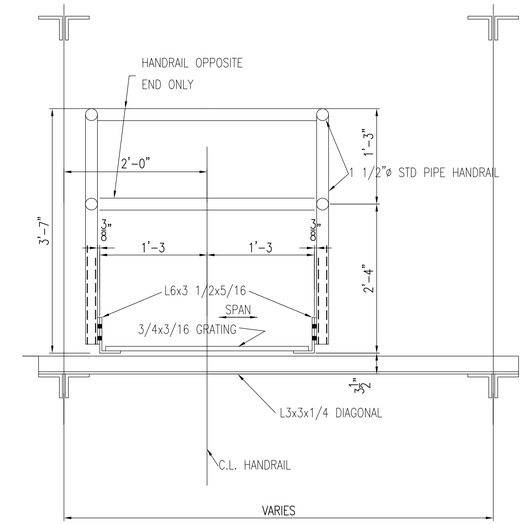

SECTION "B-B"

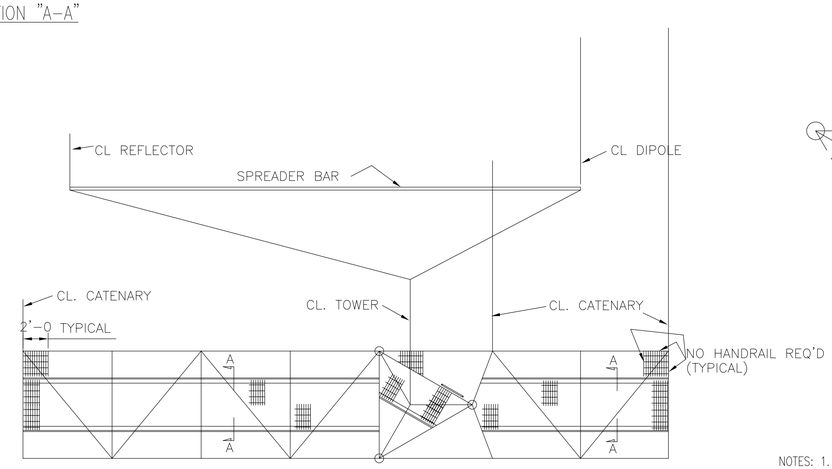

TYPICAL OUTRIGGER PLATFORM

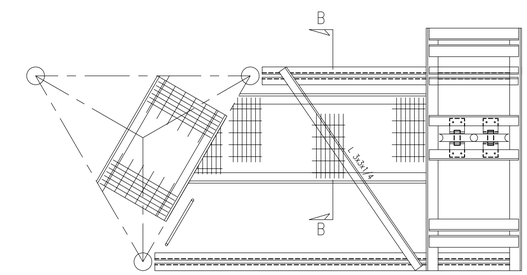

TYPICAL DEFLECTOR SHEAVE MOUNT AND COUNTERWEIGHT SUPPORT PLATFORM

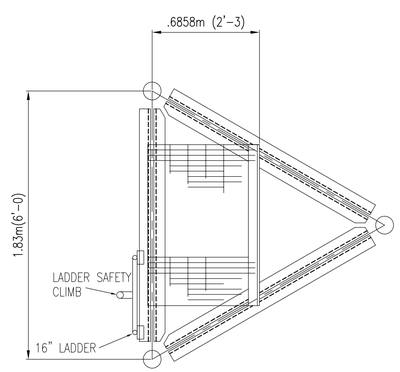

TYPICAL CROSS SECTION TOWERS 10,11,12 & 13

DETAILS OF INSIDE PLATFORMS

LOCATION OF INSIDE PLATFORM

1. COUNTERWEIGHT GUIDE SUPPORTS
2. DEFLECTOR SHEAVE MOUNT
3. CATENARY OUTRIGGERS
4. ANTENNA FIXING POINT

NOTES:
1. SEE DRAWING No. 1 FOR TOWER SPECIFICATIONS
2. SEE DRAWING No. 6,7 & 8 FOR STANDARD TOWER DETAILS AND FIXING POINT MOUNT DETAILS
3. ALL CONNECTIONS HAVE TWO 5/8 A325X BOLTS WITH ANCO LOCK NUTS UNLESS NOTED
4. ALL GUSSETS PLATES 3/8" UNLESS NOTED
5. ALL WELDS 1/4" FF UNLESS NOTED

AS BUILT DRAWING

REV	DESCRIPTION	DATE	APPD.

REVISION

		DATE
DRAWN	CSCD	11/14/98
CHK. BY	FLA	11/14/98
ENGR.	FLA	11/14/98
ENGR. CHK.		

APPROVALS

PROJ. MANAGER _____
SYSTEMS ENGR. _____

IBB ENGINEERING

INTERNATIONAL BROADCASTING BUREAU
ENGINEERING & TECHNICAL OPERATIONS
U.S. INFORMATION AGENCY
WASHINGTON, D.C. 20547

MARIANA RADIO RELAY STATION
PLATFORM DETAILS
ISLAND OF TINIAN, COMMONWEALTH OF THE NORTHERN MARIANA ISLANDS

PROJ. NO. 3001-2	FSCM NO. 06310	DWG. NO.
CONTR. NO.	SCALE:	SHEET 8 OF 8

SAYED HAMID BEHBEHANI & SONS CO. W.L.L.