LITTLE CALUMET RIVER, INDIANA

LOCAL FLOOD PROTECTION

STAGE VII – FLOODWALL

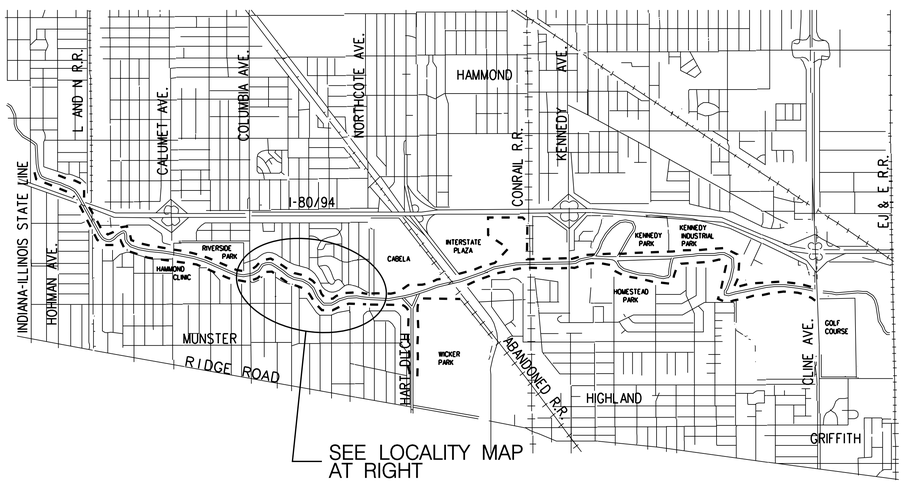

VICINITY MAP

2000 0 2000 4000 6000

SCALE IN FEET

-N-

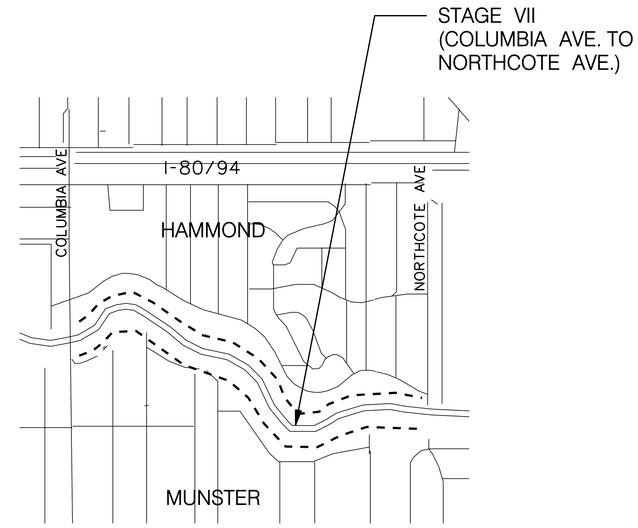

LOCALITY MAP

NTS

-N-

LEGEND

- - - - - - WEST REACH LEVEE SYSTEM

SOLICITATION SET – FEBRUARY 17, 2009

US Army Corps of Engineers Chicago District

SYMBOL	DESCRIPTION	DATE APPROVED

SIGNATURE AFFIXED BELOW INDICATE OFFICIAL RECOMMENDATION AND APPROVAL OF ALL DRAWINGS IN THIS SET AS INDEXED ON THIS SHEET.

Reviewed by: FRANK LEWANDOWSKI - PE — Date 7/31/08
TPR Team Leader

Prepared by: IMAD SAMARA — Date 2/10/09
Project Manager

Approved By: JOSEPH SCHMIDT - PE — Date 8/29/08
Chief, Design Branch

THIS PROJECT WAS DESIGNED BY U.S. ARMY CORPS OF ENGINEERS, CHICAGO DISTRICT. ALL DESIGN DECISIONS, ASSUMPTIONS, CALCULATIONS, AND RECOMMENDATIONS ARE DOCUMENTED IN DESIGN DOCUMENTS WHICH ARE OPERATING WITHIN THE SCOPE OF THEIR EMPLOYMENT. SIGNATURES ON THE DRAWINGS ARE AUTHENTIC.

DATE:	FEBRUARY 2009
SCALE:	AS SHOWN
DRAWING CODE:	LCOFPT07PS
	W912P6-09-B-0002

U.S. ARMY ENGINEER DISTRICT
CORPS OF ENGINEERS
CHICAGO, ILLINOIS

LITTLE CALUMET RIVER, INDIANA
LOCAL FLOOD PROTECTION
STAGE VII - FLOODWALL

LOCALITY MAP AND VICINITY MAP

SHEET REFERENCE NUMBER:
G-01
SHEET 01 OF 79

PLOT DATE: 2/17/2009
FILENAME: C:\Documents and Settings\r16lecmc3\My Documents\PW_Working_Directory_MC\dms17071\LCS7_G-01.dgn

LCS7_G-01.dgn 2/17/2009 12:57:44 PM

INDEX OF DRAWINGS

SHEET REF. *	NO.	DESCRIPTION
1	G-01	LOCALITY MAP AND VICINITY MAP
2	G-02	INDEX OF DRAWINGS
3	G-03	STANDARD SYMBOLS, ABBREVIATIONS & GENERAL NOTES
4	B-01	GEOTECHNICAL LEGEND
5	B-02	BORING LOCATION PLAN
6	B-03	BORING LOGS (NORTH)
7	B-04	BORING LOGS (NORTH/SOUTH)
8	B-05	BORING LOGS (SOUTH)
9	B-06	BORING LOGS (SOUTH)
10	C-01	WORK LIMITS AND CONTROL DATA STA. 7S 00+00 TO 7S 24+98
11	C-02	WORK LIMITS AND CONTROL DATA STA. 7S 24+98 TO 7S 52+86
12	C-03	WORK LIMITS AND CONTROL DATA STA. 7N 00+00 TO 7N 24+98
13	C-04	WORK LIMITS AND CONTROL DATA STA. 7N 24+98 TO 7N 52+39
14	C-05	PLAN AND PROFILE STA. 7S 00+00 TO 7S 12+79
15	C-06	PLAN AND PROFILE STA. 7S 12+79 TO 7S 23+18
16	C-07	PLAN AND PROFILE STA. 7S 23+18 TO 7S 31+35
17	C-08	PLAN AND PROFILE STA. 7S 31+35 TO 7S 40+50
18	C-09	PLAN AND PROFILE STA. 7S 40+50 TO 7S 52+86
19	C-10	PLAN AND PROFILE STA. 7N 00+00 TO 7N 12+50
20	C-11	PLAN AND PROFILE STA. 7N 12+50 TO 7N 22+40
21	C-12	PLAN AND PROFILE STA. 7N 22+40 TO 7N 31+79
22	C-13	PLAN AND PROFILE STA. 7N 31+79 TO 7N 38+72
23	C-14	PLAN AND PROFILE STA. 7N 38+72 TO 7N 52+39
24	C-15	CROSS SECTION STA. 7S 00+00 TO 7S 09+00
25	C-16	CROSS SECTION STA. 7S 10+00 TO 7S 19+00
26	C-17	CROSS SECTION STA. 7S 20+00 TO 7S 29+00
27	C-18	CROSS SECTION STA. 7S 30+00 TO 7S 39+00
28	C-19	CROSS SECTION STA. 7S 40+00 TO 7S 49+00
29	C-20	CROSS SECTION STA. 7S 50+00 TO 7S 52+86
30	C-21	CROSS SECTION STA. 7N 00+00 TO 7N 09+00
31	C-22	CROSS SECTION STA. 7N 10+00 TO 7N 19+00
32	C-23	CROSS SECTION STA. 7N 20+00 TO 7N 29+00
33	C-24	CROSS SECTION STA. 7N 30+00 TO 7N 39+00
34	C-25	CROSS SECTION STA. 7N 40+00 TO 7N 49+00
35	C-26	CROSS SECTION STA. 7N 50+00 TO 7N 52+39
36	C-27	HAUL ROUTES
37	C-28	7S-W RAMP PLAN, SECTIONS AND DETAILS
38	C-29	7S-E RAMP PLAN, SECTIONS AND DETAILS
39	C-30	TYPICAL SECTIONS AND DETAILS
40	C-31	PLAN AND PROFILE 60" GATED SLUICE STRUCTURE
41	C-32	PLAN AND PROFILE COLUMBIA AVE 30" GATEWELL
42	R-01	RECREATION TRAIL PLAN AND PROFILE STA. 7R 00+00 TO 7R 10+70
43	R-02	RECREATION TRAIL PLAN AND PROFILE STA. 7R 10+70 TO 7R 20+23
44	R-03	RECREATION TRAIL PLAN AND PROFILE STA. 7R 20+23 TO 7R 29+70
45	R-04	RECREATION TRAIL PLAN AND PROFILE STA. 7R 29+70 TO 7R 36+30
46	R-05	RECREATION TRAIL PLAN AND PROFILE STA. 7R 36+30 TO 7R 49+91
47	R-06	RECREATION TRAIL SIGNS
48	R-07	VEHICLE BARRIER DETAILS
49	R-08	A-FRAME GATE ELEVATION AND DETAILS
50	R-09	RECREATION TRAIL & RAMP CONTROL DATA & TYPICAL SECTIONS
51	S-01	COLUMBIA AVE 30" GATEWELL PLAN, ELEVATION AND SECTIONS
52	S-02	COLUMBIA AVE 30" GATEWELL SECTIONS AND DETAILS
53	S-03	WALNUT ST PUMP STATION OUTLET PLAN AND ELEVATION
54	S-04	WALNUT ST PUMP STATION OUTLET SECTIONS
55	S-05	WALNUT ST PUMP STATION OUTLET SECTIONS AND DETAILS
56	S-06	NORTHCOTE 60" GATED SLUICE STRUCTURE PLAN, ELEVATION AND SECTIONS
57	S-07	NORTHCOTE 60" GATED SLUICE STRUCTURE SECTIONS AND DETAILS
58	S-08	NORTHCOTE 60" SLUICE SAFETY SCREEN TRASH RACK DETAILS
59	S-09	SAND BAG CLOSURES NORTH NORTHCOTE PLAN AND SECTIONS
60	S-09A	SAND BAG CLOSURES SOUTH NORTHCOTE PLAN AND SECTIONS
61	S-10	SAND BAG CLOSURES NORTH COLUMBIA PLAN AND SECTIONS
62	S-11	SAND BAG CLOSURES SOUTH COLUMBIA PLAN AND SECTIONS
63	S-12	NORTH FLOODWALL TYPICAL ELEVATION AND SECTION
64	S-13	SOUTH FLOODWALL TYPICAL ELEVATION AND SECTIONS
65	S-14	FLOODWALL ELEVATIONS AND SECTIONS
66	S-15	TYPICAL PILASTER SECTIONS AND DETAILS
67	S-16	TYPICAL FLOODWALL DETAILS
68	S-17	7S 2+15 PIPE PASSING ELEVATION, SECTIONS, AND DETAILS
69	S-18	7S 15+00 PIPE PASSING ELEVATION, SECTIONS, AND DETAILS
70	S-19	7N 1+50 PIPE PASSING ELEVATION, SECTIONS, AND DETAILS
71	S-20	7N 15+68 PIPE PASSING ELEVATION, SECTIONS, AND DETAILS
72	S-21	ADDITIONAL UTILITY CROSSINGS ELEVATIONS AND DETAILS
73	S-22	STANDARD CONSTRUCTION DETAILS AND NOTES
74	S-23	PRE-CAST ALTERNATIVE ELEVATION AND SECTIONS
75	S-24	PRE-CAST ALTERNATIVE SECTIONS AND DETAILS
76	S-25	PRE-CAST ALTERNATIVE MISC. METAL AND CORNER DETAILS
77	S-26	PRE-CAST ALTERNATIVE PRE-CAST TO CAST IN PLACE TRANSITION DETAILS
78	M-01	COLUMBIA AVENUE AND 60" GATED SLUICE STRUCTURE
79	M-02	WALNUT STREET PUMP STATION OUTLET STRUCTURE

US Army Corps of Engineers
Chicago District

SYMBOL	AMENDMENT DESCRIPTION	DATE APPROVED	SYMBOL	DESCRIPTION	DATE APPROVED

DESIGNED BY: MWC
DATE: FEBRUARY 2009
DRAWN BY: JW/OB
SCALE: AS SHOWN
CHECKED BY: JAG
SOLICITATION NUMBER: W912P6-09-B-0002
JOHN A. GROBOSKI, P.E. 7/31/08
SUBMITTED BY: DATE:

U.S. ARMY ENGINEER DISTRICT
CORPS OF ENGINEERS
CHICAGO, ILLINOIS

LITTLE CALUMET RIVER, INDIANA
LOCAL FLOOD PROTECTION
STAGE VII - FLOODWALL

INDEX OF DRAWINGS

SHEET REFERENCE NUMBER:
G-02
SHEET 02 OF 79

PLOT DATE: 2/17/2009
FILENAME: C:\Documents and Settings\h6lecmc9\My Documents\PW_Working_Directory_MC\dms17071\LCS7_G-02.dgn

LCS7_G-02.dgn 2/17/2009 9:45:52 AM

STANDARD SYMBOLS

- SOIL BORING
- SPOT ELEVATION
- EXISTING POWER POLE
- CONTROL POINT
- POINT OF INTERSECTION
- SS — EXISTING STORM SEWER
- CS — EXISTING COMBINED SEWER
- W — EXISTING WATERMAIN
- G — EXISTING GAS LINE
- PL — EXISTING OVERHEAD ELECTRIC, TELEPHONE, SIGNAL AND/OR CABLE TV LINES
- T — EXISTING UNDERGROUND TELEPHONE
- O — EXISTING OIL LINE
- TREE
- HYDRANT
- CONCRETE
- EXISTING LIGHT POLE
- E — EXISTING ELECTRIC HANDHOLE
- EXISTING SIGN
- PROPOSED TRAIL SIGN
- W — EXISTING WATER VALVE
- GUY ANCHOR
- EXISTING TELEPHONE BOX
- STRUCTURAL BACKFILL
- IMPERVIOUS BACKFILL
- EXISTING UTILITY/POWER POLE
- TREELINE
- x — x — x — EXISTING FENCE
- WORK LIMITS
- EXISTING GROUND
- EXISTING WATERLINE
- CENTERLINE OF FLOODWALL AND RECREATION TRAIL
- RIPRAP
- A-FRAME GATE
- WATER LEVEL
- R1 — RAMP COORDINATE
- C1 — FLOODWALL CENTERLINE POINT
- S1 — PROPOSED STRUCTURE LAYOUT POINT
- T1 — RECREATION TRAIL CENTERLINE POINT
- W1 — WORK LIMIT POINT
- 595 — INDEX DEPRESSION
- INTERMEDIATE DEPRESSION
- 595 — INDEX CONTOUR
- INTERMEDIATE CONTOUR
- GRID TICK
- S — EXISTING SANITARY MANHOLE
- D — EXISTING STORM MANHOLE
- G — EXISTING GAS VALVE
- EXISTING MANHOLE
- CB — EXISTING CATCH BASIN
- N2 OR S2 — PILASTER WITH NUMBERING, N FOR NORTH AND S FOR SOUTH

GENERAL NOTES:

1. FOR INFORMATION ON THE FLOODWALL CONSTRUCTION SEQUENCE SEE SPECIFICATION SECTION 01 32 01.02 10.
2. THE CONTRACTOR MUST PROTECT ALL UTILITIES DURING CONSTRUCTION.
3. THE CONTRACTOR SHALL FIELD VERIFY THE EXACT LOCATIONS AND DEPTHS OF EXISTING UNDERGROUND UTILITIES.
4. UNLESS OTHERWISE NOTED, THE CONTRACTOR SHALL CONTACT UTILITY OWNERS A MINIMUM OF 30 DAYS PRIOR TO BEGINNING WORK IN THESE AREAS.
5. INDOT TEMPORARY EROSION AND SEDIMENT CONTROL GUIDELINES SHALL BE FOLLOWED THROUGHOUT THE WORK LIMITS.
6. THE GRID COORDINATE SYSTEM SHOWN ON THE PLANS IS BASED ON INDIANA STATE PLANE ZONE WEST COORDINATE SYSTEM, NORTH AMERICAN DATUM (NAD) OF 1927.
7. ELEVATIONS SHOWN REFER TO THE ELEVATION IN FEET, ABOVE THE NATIONAL GEODETIC VERTICAL DATUM (NGVD) OF 1929.
8. EXISTING FEATURES AND TOPOGRAPHY WERE REPRODUCED FROM AERIAL PHOTOGRAPHY TAKEN IN 1984 AND A LAND SURVEY PERFORMED IN 2008.
9. ALL WORK SHALL BE PERFORMED IN ACCORDANCE WITH THE LATEST EDITION OF EM 385-1-1, US ARMY CORPS OF ENGINEERS, SAFETY AND HEALTH REQUIREMENTS MANUAL.
10. ALL STAGING AND STORAGE AREAS SHALL BE RESTORED TO PRE-CONSTRUCTION GRADES AND ELEVATION UNLESS DIRECTED OTHERWISE BY THE COR.
11. THE CONTRACTOR SHALL MAINTAIN THE SAME LEVEL OF FLOOD PROTECTION AS THE EXISTING LEVEE DURING CONSTRUCTION BY TEMPORARY LEVEE OR OTHER MEANS APPROVED BY THE COR. RIVER STAGES ON THE LITTLE CALUMET RIVER CAN RISE QUICKLY, SO A GAP SHOULD NEVER BE LEFT IN THE LEVEE WITHOUT EITHER THE CONTRACTOR ON SITE READY TO FLOOD FIGHT THE GAP OR PROVIDE A TEMPORARY LINE OF FLOOD PROTECTION EQUIVALENT TO THE EXISTING LINE OF FLOOD PROTECTION.
12. THE CONTRACTOR SHALL NOT PLACE ANY TEMPORARY STOCKPILES OF EARTHEN MATERIALS ON THE RIVER SIDE OF THE PROPOSED CENTERLINE OF FLOOD PROTECTION ANY TIME DURING CONSTRUCTION.

STANDARD ABBREVIATIONS

℄	CENTER LINE
RCP	REINFORCED CONCRETE PIPE
EL.	ELEVATION
B.M.	BENCH MARK
T.B.M.	TEMPORARY BENCH MARK
P.I.	POINT OF INTERSECTION
P.C.	POINT OF CURVATURE
P.O.B.	POINT OF BEGINNING
P.O.E.	POINT OF ENDING
PT	POINT OF TANGENCY
PVI	POINT OF VERTICAL INTERSECTION
CJ	CONTRACTION JOINT
VERT OR V	VERTICAL
HOR OR H	HORIZONTAL
R	RADIUS
TYP.	TYPICAL
MIN.	MINIMUM
MAX.	MAXIMUM
DIA.	DIAMETER
O.C.	ON CENTER
STD.	STANDARD
WT.	WEIGHT
REQ'D.	REQUIRED
EXP.	EXPANSION
EST.	ESTIMATE
(E)	EXPANSION JOINT
IN.	INCH
ϕ	DIAMETER
EST.	ESTIMATE
T.O.P.	TOP OF PILE
U.S.	UPSTREAM
D.S.	DOWNSTREAM
CMP	CORRUGATED METAL (CULVERT) PIPE
NGVD	NATIONAL GEODETIC VERTICAL DATUM OF 1929
FT	FEET
INV.	INVERT
T & B	TOP & BOTTOM
EF	EACH FACE
EA	EACH
SYM ABT	SYMMETRICAL ABOUT
AS	ASPHALT CONCRETE
PCC	PORTLAND CEMENT CONCRETE
LF	LINEAR FEET
N.T.S.	NOT TO SCALE
GALV.	GALVANIZED
CNST.	CONSTRUCTION
ℙ	PLATE
CLR.	CLEAR
PSI	POUNDS PER SQUARE INCH
EP	EDGE OF PAVEMENT
DIP	DUCTILE IRON PIPE
WL	WATER LEVEL
CIP	CAST IRON PIPE
CTJ	CONTROL JOINT
EJ	EXPANSION JOINT
EX	EXISTING
CSJ	CONSTRUCTION JOINT
B.O.C.	BOTTOM OF CONCRETE
S.S.	STAINLESS STEEL

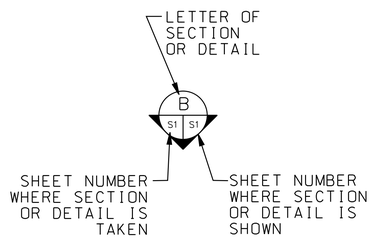

"S" SHEET SECTION MARKER

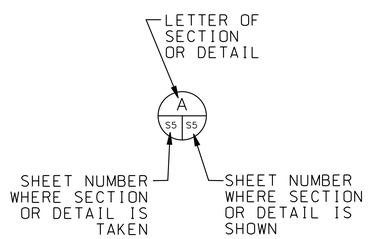

"S" SHEET SECTION TITLE

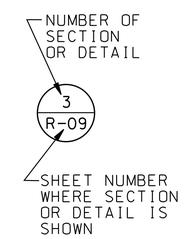

"R" SHEET SECTION TITLE

POINTS OF CONTACT

NAME	FIRM NAME	OFFICE NAME	PHONE NUMBER
PHIL DITTMANN	BP PIPELINE	ENGINEERING	219-736-5866 EXT. 330
MARCIE FOSTER	BP PIPELINE	ROW SPECIALIST	630-836-3461
JAMES POKRAJAC	LITTLE CALUMET RIVER BASIN COMISSION	LCRBDC	219-763-0696
MARK PASYK	NIPSCO	UTILITY HIGHWAY AFFAIRS	219-647-4299
NEAL ARNDT	NIPSCO	GAS TRANSMISSION ENGINEER	219-647-4779
FRANK JANOSI	NIPSCO	DISTRIBUTION ENGINEER	219-886-5560
STAN DOSTATNI	CITY OF HAMMOND	CITY ENGINEER	219-853-6336
RICK SUTTON	CITY OF HAMMOND	HAMMOND SANITARY DISTRICT	219-853-6412 EXT. 530
JIM MANDON	TOWN OF MUNSTER	TOWN ENGINEER	219-836-6995
SHELDON EDD	US ARMY CORPS OF ENGINEERS	PROJECT ENGINEER	219-923-1763
IMAD SAMARA	US ARMY CORPS OF ENGINEERS	PROJECT MANAGER	312-846-5560

US Army Corps of Engineers
Chicago District

SYMBOL	AMENDMENT DESCRIPTION	DATE APPROVED	SYMBOL	DESCRIPTION	DATE APPROVED

DESIGNED BY: MWC | DATE: FEBRUARY 2009
DRAWN BY: JW/DB | SCALE: AS SHOWN
CHECKED BY: JAG | SOLICITATION NUMBER: W912P6-09-B-0002
SUBMITTED BY: JOHN A. GROBOSKI, P.E. | DATE: 7/31/08

U.S. ARMY ENGINEER DISTRICT
CORPS OF ENGINEERS
CHICAGO, ILLINOIS

LITTLE CALUMET RIVER, INDIANA
LOCAL FLOOD PROTECTION
STAGE VII - FLOODWALL

STANDARD SYMBOLS, ABBREVIATIONS & GENERAL NOTES

SHEET REFERENCE NUMBER:
G-03
SHEET 03 OF 79

PLOT DATE: 2/17/2009
FILENAME: C:\Documents and Settings\hlescmc3\My Documents\PW_Working_Directory_MC\dms17071\LCS7_G-03.dgn

LCS7_G-03.dgn 2/17/2009 9:48:23 AM

UNIFIED SOIL CLASSIFICATION
(Including Identification and Description)

Major Divisions			Group Symbols	Typical Names	Field Identification Procedures (Excluding particles larger than 3 inches and basing fractions on estimated weights)			Information Required for Describing Soils	Laboratory Classification Criteria
1	2		3	4	5			6	7
Coarse-grained Soils: More than half of material is larger than No. 200 sieve size	Gravels: More than half of coarse fraction is larger than No. 4 sieve size (For visual classification, the 1/4-in. size may be used as equivalent to the No. 4 sieve size)	Clean Gravels (Little or no fines)	GW	Well-graded gravels, gravel-sand mixtures, little or no fines.	Wide range in grain sizes and substantial amounts of all intermediate particle sizes			For undisturbed soils add information on stratification, degree of compactness cementation, moisture conditions and drainage characteristics	Determine percentages of gravel and sand from grain-size curve. Depending on percentage of fines (fraction smaller than No. 200 sieve size) coarse-grained soils are classified as follows: Less than 5% GW, GP, SW, SP. More than 12% GM, GC, SM, SC. 5% to 12% Borderline cases requiring use of dual symbols. $C_U = \frac{D_{60}}{D_{10}}$ Greater than 6; $C_C = \frac{(D_{30})^2}{D_{10} \times D_{60}}$ Between 1 and 3; Not meeting all gradation requirements for GW: Atterberg limits below "A" line or PI less than 4 — Above "A" line with PI between 4 and 7 are borderline cases requiring use of dual symbols; Atterberg limits above "A" line with PI greater than 7
			GP	Poorly-graded gravels, gravel-sand mixtures, little or no fines.	Predominantly one size or a range of sizes with some intermediate sizes missing				
		Gravels with Fines (Appreciable amount of fines)	GM	Silty gravels, gravel-sand-silt mixtures	Nonplastic fines or fines with low plasticity (for identification procedures see ML below).			Give typical name: indicate approximate percentages of sand and gravel, max. size, angularity, surface condition, and hardness of the coarse grains: local or geologic name and other pertinent descriptive information, and symbol in parentheses.	
			GC	Clayey gravels, gravel-sand-clay mixtures	Plastic fines (for identification procedures see CL below).				
	Sands: More than half of coarse fraction is smaller than No. 4 sieve size	Clean Sands (Little or no fines)	SW	Well-graded sands, gravelly sands, little or no fines.	Wide range in grain size and substantial amounts of all intermediate particle sizes.				$C_U = \frac{D_{60}}{D_{10}}$ Greater than 4; $C_C = \frac{(D_{30})^2}{D_{10} \times D_{60}}$ Between 1 and 3; Not meeting all gradation requirements for SW: Atterberg limits below "A" line or PI less than 4 — Limits plotting in hatched zone with PI between 4 and 7 are borderline cases requiring use of dual symbols; Atterberg limits above "A" line with PI greater than 7
			SP	Poorly-graded sands, gravelly sands, little or no fines.	Predominantly one size or a range of sizes with some intermediate sizes missing				
		Sands with Fines (Appreciable amount of fines)	SM	Silty sands, sand-silt mixtures.	Nonplastic fines or fines with low plasticity (for identification procedures see ML below).				
			SC	Clayey sands, sand-clay mixtures.	Plastic fines (for identification procedures see CL below).				
Fine-grained Soils: More than half of material is smaller than No. 200 sieve size. The No. 200 sieve size is about the smallest particle visible to the naked eye					Identification Procedures on Fraction Smaller than NO. 40 Sieve Size				Use grain-size curve in identifying the fractions as given under field identification
					Dry Strength (Crushing characteristics)	Dilatancy (Reaction to shaking)	Toughness (Consistency near PL)		
	Silts and Clays: Liquid limit less than 50		ML	Inorganic silts and very fine sands, rock flour, silty or clayey fine sands or clayey silts with slight plasticity.	None to slight	Quick to slow	None	Give typical name, indicate degree and character of plasticity, amount and maximum size of coarse grains, color in wet condition, odor if any, local or geologic name, and other pertinent descriptive information, and symbol in parentheses.	
			CL	Inorganic clays of low to medium plasticity, gravelly clays, sandy clays, silty clays, or lean clays.	Medium to high	None to very slow	Medium		
			OL	Organic silts and organic silty clays of low plasticity.	Slight to medium	Slow	Slight		
	Silts and Clays: Liquid limit greater than 50		MH	Organic silts, micaceous or diatomaceous fine sandy or silty soils, elastic silts.	Slight to medium	Slow to none	Slight to medium	For undisturbed soils add information on structure, stratification, consistency in undisturbed and remolded states, moisture and drainage condition.	
			CH	Inorganic clays of high plasticity, fat clays.	High to very high	None	High		
			OH	Organic clays of medium to high plasticity organic silts.	Medium to high	None to very slow	Slight to medium	Example: Clayey silt, brown, slightly plastic, small percentage of fine sand, numerous vertical root holes, firm and dry in place, loess, (ML).	
Highly Organic Soils			Pt	Peat and other highly organic soils.	Readily identified by color, odor, spongy feel and frequently by fibrous texture.				

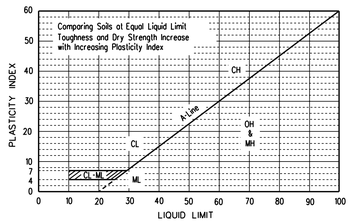

PLASTICITY CHART
For laboratory classification of fine-grained soils

(1) Boundary classifications. Soils possessing characteristics of two groups are designated by combinations of group symbols. For example GW-GC, well-graded gravel-sand mixture with clay binder.

(2) All sieve sizes on this chart are U.S. standard.

FIELD IDENTIFICATION PROCEDURES FOR FINE-GRAINED SOIL OR FRACTIONS

These procedures are to be performed on the minus No. 40 sieve size particles, approximately 1/64 in. For field classification purposes screening is not intended, simply remove by hand the coarse particles that interfere with the tests.

DILATANCY (Reaction to shaking)

After removing particles larger then No. 40 sieve size, prepare a pat of moist soil with a volume of about one-half cubic inch. Add enough water if necessary to make the soil soft but not sticky.

Place the pat in the open palm of one hand and shake horizontally, striking vigorously against the other hand several times. A positive reaction consists of the appearance of water on the surface of the pat which changes to a livery consistency and becomes glossy. When the sample is squeezed between the fingers, the water and gloss disappear from surface, the pat stiffens, and finally it cracks or crumbles. The rapidity of appearance of water during shaking and of its disappearance during squeezing assist in identifying the character of the fines in a soil.

Very fine clean sands give the quickest and most distinct reaction whereas a plastic clay has no reaction. Inorganic silts, such as a typical rock flour, show a moderately quick reaction.

DRY STRENGTH (Crushing characteristics)

After removing particles larger than No. 40 sieve size, mold a pat of soil to the consistency of putty, adding water if necessary. Allow the pat to dry completely by oven, sun, or air drying, and then test its strength by breaking and crumbling between the fingers. This strength is a measure of the character and quantity of the colloidal fraction contained in the soil. The dry strength increases with increasing plasticity.

High dry strength is characteristic for clays of the CH group. A typical inorganic silt possesses only very slight dry strength. Silty fine sands and silts have about the same slight dry strength, but can be distinguished by the feel when powdering the dried specimen. Fine sand feels gritty whereas a typical silt has the smooth feel of flour.

TOUGHNESS (Consistency near plastic limit)

After removing particles larger than the No. 40 sieve size, a specimen of soil about one-half inch cube in size, is molded to the consistency of putty. If too dry, water must be added and if sticky, the specimen should be spread out in a thin layer and allowed to lose some moisture by evaporation. Then the specimen is rolled out by hand on a smooth surface or between the palms into a thread about one-eighth inch in diameter. The thread is then folded and rolled repeatedly. During the manipulation the moisture content is gradually reduced and the specimen stiffens, finally loses its plasticity, and crumbles when the plastic limit is reached.

After the thread crumbles, the pieces should be lumped together and a slight kneading action continued until the lump crumbles.

The tougher the thread near the plastic limit and the stiffer the lump when it finally crumbles, the more potent is the colloidal clay fraction in the soil. Weakness of the thread at the plastic limit and quick loss of coherence of the lump below the plastic limit indicate either inorganic clay of low plasticity, or materials such as kaolin-type clays and organic clays which occur below the A-line.

Highly organic clays have a very weak and spongy feel at the plastic limit.

GENERAL BORING LEGEND

L-512		BORING NUMBER
11 SEPT 1991		DATE OF BORING
G.S. 999.9		GROUND SURFACE ELEVATION AT BORING
	GW	WELL GRADED GRAVELS, GRAVEL- SAND MIXTURE, LITTLE OR NO FINES
	GP	POORLY GRADED GRAVELS, LITTLE OR NO FINES
	GM	SILTY GRAVELS, GRAVEL- SAND- SILT MIXTURES
	GC	CLAYEY GRAVELS, GRAVEL- SAND- CLAY MIXTURES
	SW	WELL GRADED SANDS, GRAVELLY SANDS, LITTLE OR NO FINES
	SP	POORLY GRADED SANDS, GRAVELLY SANDS, LITTLE OR NO FINES
	SM	SILTY SANDS, SAND- SILT MIXTURES
	SC	CLAYEY SANDS, SAND- CLAY MIXTURES
	ML	INORGANIC SILTS, LIQUID LIMITS LESS THAN 50
	MH	INORGANIC SILTS, LIQUID LIMIT GREATER THAN 50
	CL	INORGANIC CLAYS, LOW TO MED. PLASTICITY, LIQUID LIMIT LESS THAN 50
	CH	INORGANIC CLAYS, HIGH PLASTICITY, LIQUID LIMIT GREATER THAN 50
	OL	ORGANIC SILTS OR CLAYS, LOW PLASTICITY, LIQUID LIMIT LESS THAN 50
	OH	ORGANIC SILTS OR CLAYS, MED. TO HIGH PLASTICITY, LIQUID LIMIT GREATER THAN 50
	PT	PEAT
	SP-SM	BORDERLINE MATERIAL
	SP&SM	STRATIFIED MATERIAL
W.L. 800.0		24 HR. WATER LEVEL
700.0		ELEVATION AT BOTTOM OF BORING

GENERAL BORING NOTES

1. GENERAL: THE UNIFIED SOIL CLASSIFICATION SYSTEM IS USED TO IDENTIFY BASIC SOIL TYPE. THE LEGEND REPRESENTS ONLY THE BASIC SOILS. TO COMPLETE THE CLASSIFICATION, PERTINENT INFORMATION IS ADDED TO THE RIGHT OF THE BORING STAFF, NOTES PERTAINING TO A SPECIFIC BORING ARE SHOWN BELOW THE BORING STAFF.

2. MOISTURE CONTENT: THE NATURAL MOISTURE CONTENT IN PERCENT OF DRY WEIGHT (MC) IS SHOWN TO THE LEFT OF THE BORING STAFF.

3. BLOW COUNT (STP): BLOW COUNTS ARE SHOWN TO THE LEFT OF THE BORING STAFF AND, EXCEPT AS NOTED, ARE THE NUMBER OF BLOWS NECESSARY TO DRIVE THE SAMPLER USED A DISTANCE OF 12". STANDARD 140 LB. HAMMER AND A 30" DROP. FOR NON-STANDARD BLOW COUNTS, SAMPLER SIZE, HAMMER WEIGHT AND HEIGHT OF DROP ARE AS SHOWN.

4. ATTERBERG LIMITS: LIQUID LIMIT (LL) AND PLASTIC LIMIT (PL), IN PERCENT, ARE SHOWN TO THE RIGHT OF THE BORING STAFF.

5. QU*: HAND PENETROMETER READING (TSF).

6. ELEVATIONS REFERENCED TO N.G.V.D., (1929 ADJUSTED).

7. BORING LOCATIONS ARE SHOWN ON PLAN AND PROFILE SHEETS.

8. THE BORINGS SHOW SUMMARIES OF INFORMATION RECORDED ON THE ORIGINAL FIELD LOGS AND FROM LABORATORY FIELD TESTS. ARRANGEMENTS TO INSPECT THE ORIGINAL FIELD LOGS OR LABORATORY SOIL TEST RESULTS AT THE CHICAGO DISTRICT OFFICE CAN BE MADE BY CALLING THE CONTRACTING OFFICER. NOT ALL OF THE LABORATORY INFORMATION IS SHOWN.

9. BOREHOLES WERE BACKFILLED.

US Army Corps of Engineers
Chicago District

SYMBOL	AMENDMENT DESCRIPTION	DATE APPROVED	SYMBOL	DESCRIPTION	DATE APPROVED

DESIGNED BY: YG | DATE: FEBRUARY 2009
DRAWN BY: OJ | SCALE: AS SHOWN
CHECKED BY: WR | SOLICITATION NUMBER: W912P6-09-B-0002
SUBMITTED BY: WILLIAM ROCHFORD, P.E. | DATE: 8/28/08

U.S. ARMY ENGINEER DISTRICT
CORPS OF ENGINEERS
CHICAGO, ILLINOIS

LITTLE CALUMET RIVER, INDIANA
LOCAL FLOOD PROTECTION
STAGE VII - FLOODWALL

GEOTECHNICAL LEGEND

SHEET REFERENCE NUMBER:
B-01
SHEET 04 OF 79

PLOT DATE: 2/13/2009
FILENAME: C:\working\B\dms17071\LCS7_B-01.dgn

LCS7_B-01.dgn 2/13/2009 3:42:45 PM

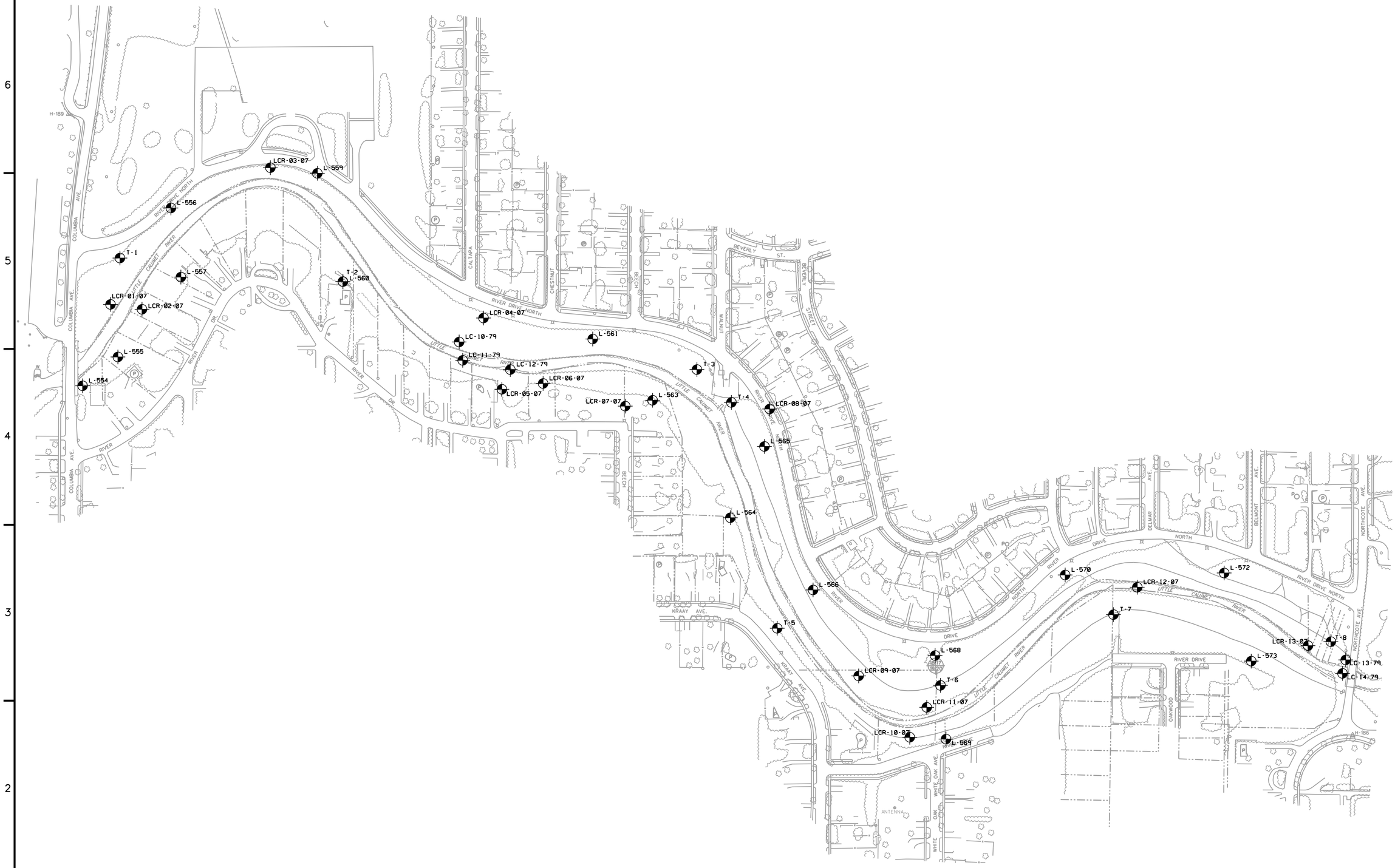

BORING LOCATION PLAN

20' 10' 0 20'

US Army Corps of Engineers
Chicago District

SYMBOL	AMENDMENT DESCRIPTION	DATE APPROVED	SYMBOL	DESCRIPTION	DATE APPROVED

DESIGNED BY: YG
DATE: FEBRUARY 2009
DRAWN BY: OJ
SCALE: AS SHOWN
CHECKED BY: WR
SOLICITATION NUMBER: W912P6-09-B-0002
SUBMITTED BY: WILLIAM ROCHFORD, P.E.
DATE: 8/28/08

U.S. ARMY ENGINEER DISTRICT
CORPS OF ENGINEERS
CHICAGO, ILLINOIS

LITTLE CALUMET RIVER, INDIANA
LOCAL FLOOD PROTECTION
STAGE VII - FLOODWALL

BORING LOCATION PLAN

SHEET REFERENCE NUMBER:
B-02
SHEET 05 OF 79

PLOT DATE: 2/13/2009
FILENAME: C:\workingB\dms17071\LCS7_B-02.dgn

LCS7_B-02.dgn 2/13/2009 3:43:08 PM

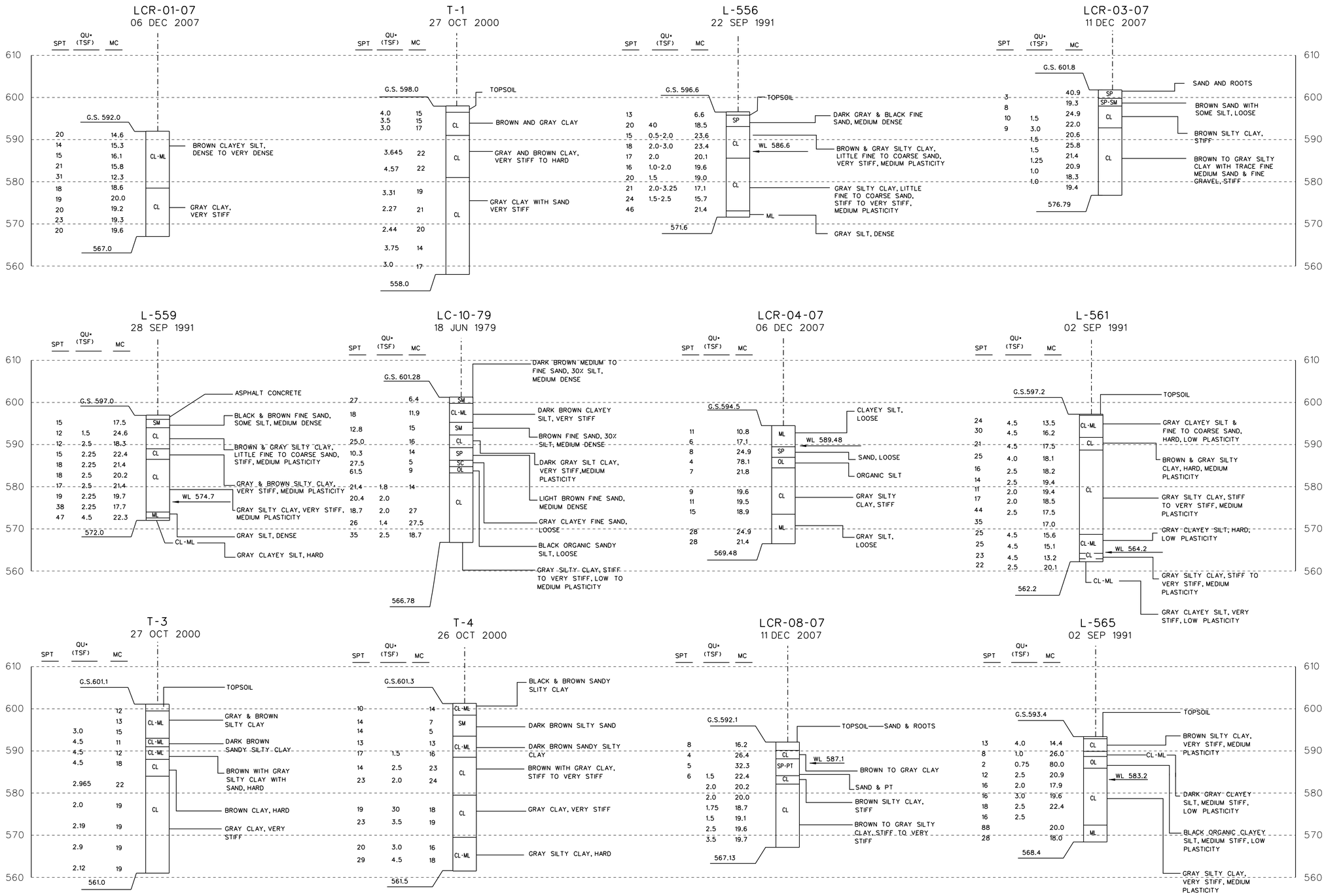

US Army Corps of Engineers
Chicago District

SYMBOL	AMENDMENT DESCRIPTION	DATE APPROVED	SYMBOL	DESCRIPTION	DATE APPROVED

DESIGNED BY: YG
DATE: FEBRUARY 2009
DRAWN BY: OJ
SCALE: AS SHOWN
CHECKED BY: WR
SOLICITATION NUMBER: W912P6-09-B-0002
SUBMITTED BY: WILLIAM ROCHFORD, P.E.
DATE: 8/28/08

U.S. ARMY ENGINEER DISTRICT
CORPS OF ENGINEERS
CHICAGO, ILLINOIS

LITTLE CALUMET RIVER, INDIANA
LOCAL FLOOD PROTECTION
STAGE VII - FLOODWALL

BORING LOGS
(NORTH)

SHEET REFERENCE NUMBER:
B-03
SHEET 06 OF 79

SCALE: 1'' = 20'-0"

PLOT DATE: 2/13/2009
FILENAME: C:\working\B\dms17071\LCS7_B-03.dgn

LCS7_B-03.dgn 2/13/2009 3:43:28 PM

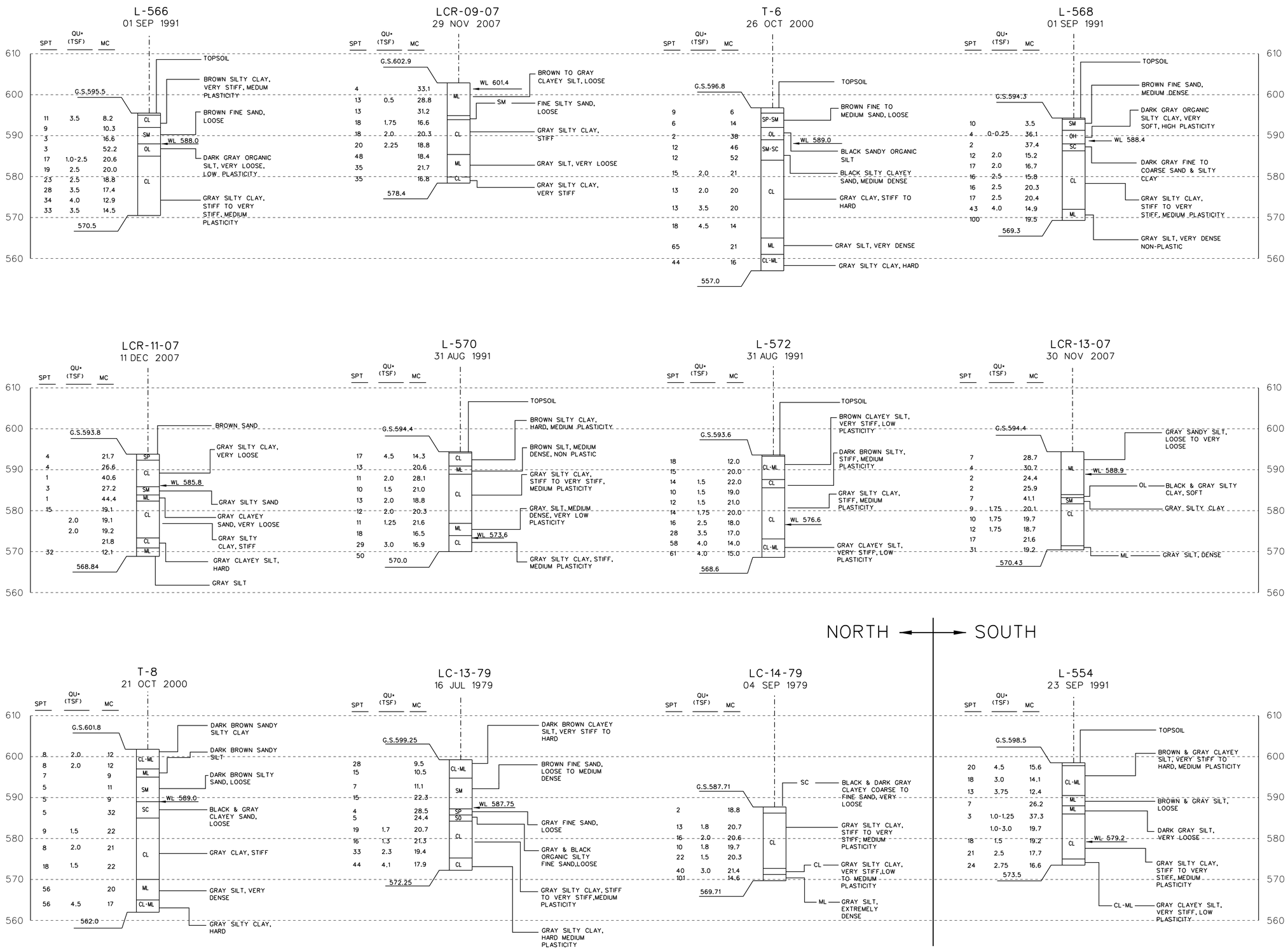

US Army Corps of Engineers
Chicago District

SYMBOL	AMENDMENT DESCRIPTION	DATE APPROVED	SYMBOL	DESCRIPTION	DATE APPROVED

DESIGNED BY: YG
DATE: FEBRUARY 2009
DRAWN BY: OJ
SCALE: AS SHOWN
CHECKED BY: WR
SOLICITATION NUMBER: W912P6-09-B-0002
WILLIAM ROCHFORD, P.E. 8/28/08
SUBMITTED BY:
DATE:

U.S. ARMY ENGINEER DISTRICT
CORPS OF ENGINEERS
CHICAGO, ILLINOIS

LITTLE CALUMET RIVER, INDIANA
LOCAL FLOOD PROTECTION
STAGE VII - FLOODWALL

BORING LOGS
(NORTH/SOUTH)

SHEET REFERENCE NUMBER:
B-04
SHEET 07 OF 79

PLOT DATE: 2/13/2009
FILENAME: C:\workingdB\dms17071\LCS7_B-04.dgn

LCS7_B-04.dgn 2/13/2009 3:43:46 PM

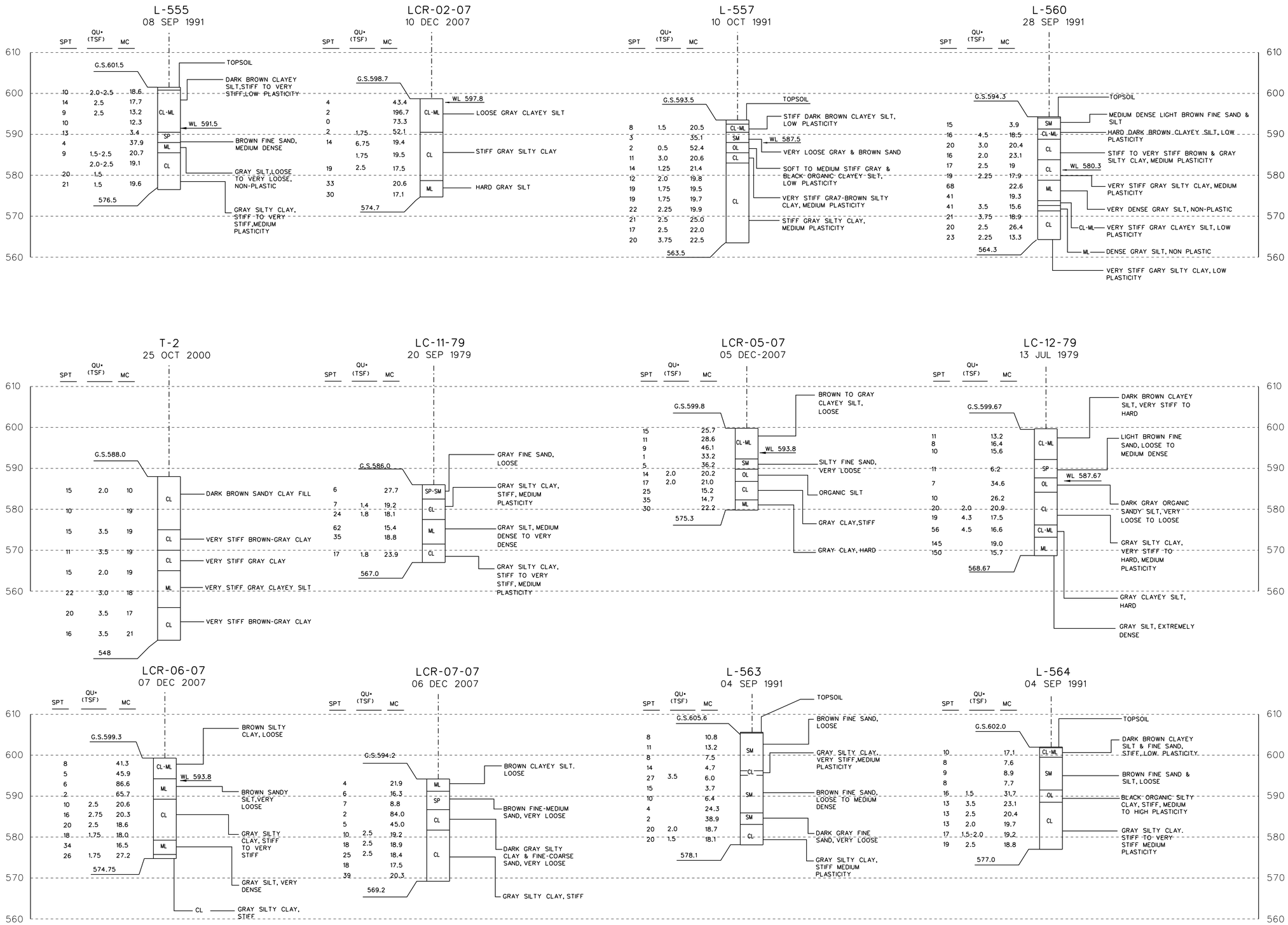

US Army Corps of Engineers
Chicago District

SYMBOL	AMENDMENT DESCRIPTION	DATE APPROVED	SYMBOL	DESCRIPTION	DATE APPROVED

DESIGNED BY: YG
DATE: FEBRUARY 2009
DRAWN BY: DJ B
SCALE: AS SHOWN
CHECKED BY: WR
SOLICITATION NUMBER: W912P6-09-B-0002
WILLIAM ROCHFORD, P.E. 8/28/08
SUBMITTED BY:
DATE:

U.S. ARMY ENGINEER DISTRICT
CORPS OF ENGINEERS
CHICAGO, ILLINOIS

LITTLE CALUMET RIVER, INDIANA
LOCAL FLOOD PROTECTION
STAGE VII - FLOODWALL

BORING LOGS
(SOUTH)

SHEET REFERENCE NUMBER:
B-05
SHEET 08 OF 79

PLOT DATE: 2/13/2009
FILENAME: C:\workingB\dms17071\LCS7_B-05.dgn

LCS7_B-05.dgn 2/13/2009 3:44:06 PM

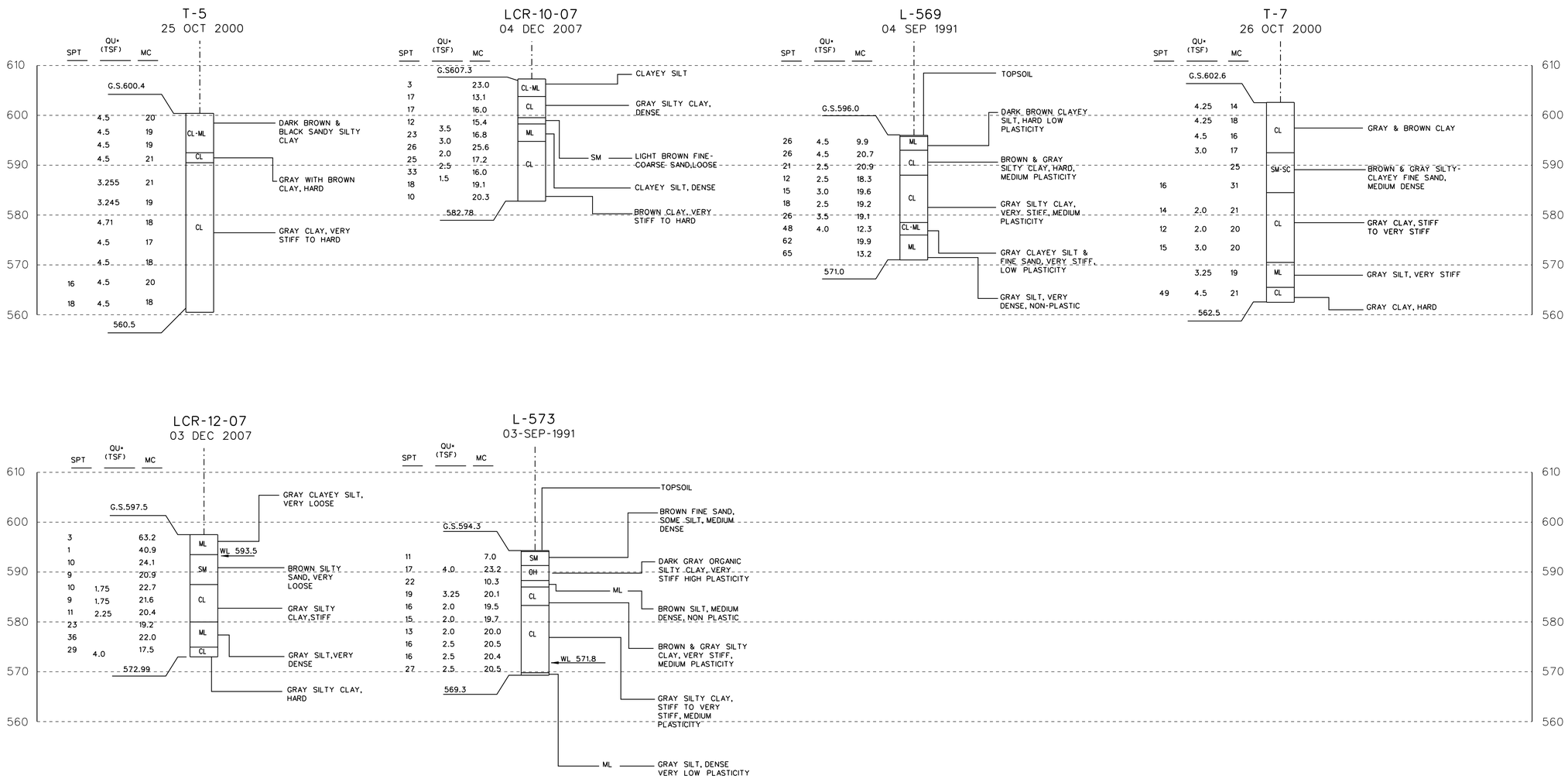

SCALE: 1'' = 20'-0"

US Army Corps of Engineers
Chicago District

SYMBOL	AMENDMENT DESCRIPTION	DATE APPROVED	SYMBOL	DESCRIPTION	DATE APPROVED

DESIGNED BY: YG
DATE: FEBRUARY 2009
DRAWN BY: OJ B
SCALE: AS SHOWN
CHECKED BY: WR
SOLICITATION NUMBER: W912P6-09-B-0002
WILLIAM ROCHFORD, P.E. 8/28/08
SUBMITTED BY:
DATE:

U.S. ARMY ENGINEER DISTRICT
CORPS OF ENGINEERS
CHICAGO, ILLINOIS

LITTLE CALUMET RIVER, INDIANA
LOCAL FLOOD PROTECTION
STAGE VII - FLOODWALL

BORING LOGS
(SOUTH)

SHEET REFERENCE NUMBER:
B-06
SHEET 09 OF 79

PLOT DATE: 2/13/2009
FILENAME: C:\workingDB\dms17071\LCS7_B-06.dgn

LCS7_B-06.dgn 2/13/2009 3:44:28 PM

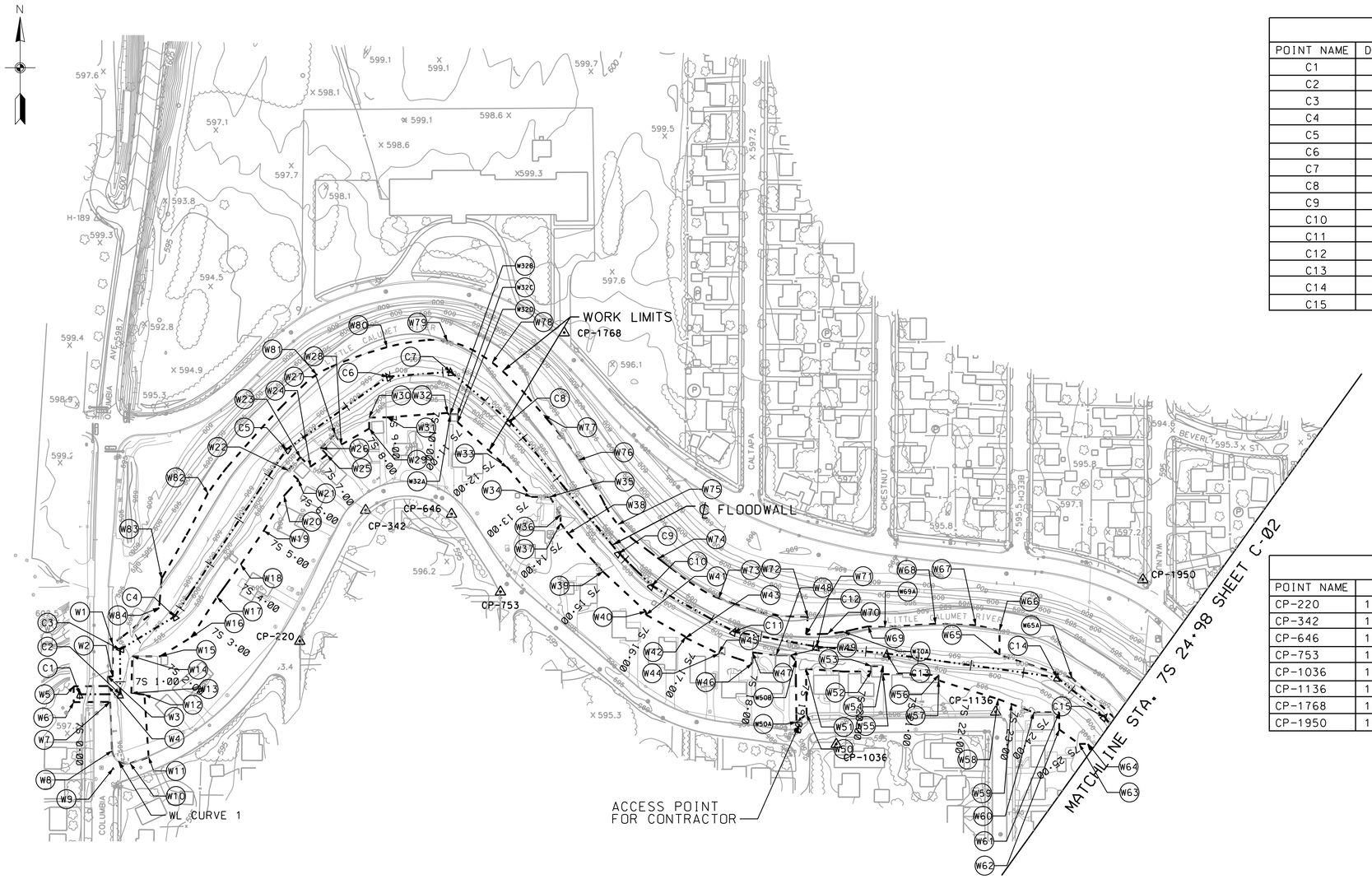

FLOODWALL CENTERLINE COORDINATES				
POINT NAME	DESCRIPTION	NORTHING	EASTING	STATION
C1	POB	1482289.09	385896.04	0+00.00
C2	PI	1482289.09	385972.48	0+76.45
C3	PI	1482373.32	385972.18	1+60.68
C4	PI	1482435.87	386075.20	2+81.20
C5	PI	1482750.81	386286.09	6+60.23
C6	PI	1482888.45	386477.67	8+96.13
C7	PI	1482897.53	386596.01	10+14.81
C8	PI	1482803.62	386707.79	11+60.80
C9	PI	1482555.15	386913.65	14+83.47
C10	PI	1482493.85	386975.80	15+70.76
C11	PI	1482407.39	387130.22	17+47.74
C12	PI	1482378.85	387286.66	19+06.77
C13	PI	1482366.04	387418.68	20+39.40
C14	PI	1482321.08	387740.23	23+64.09
C15	PI	1482246.29	387830.00	24+80.93

CONTROL POINT COORDINATES				
POINT NAME	NORTHING	EASTING	ELEVATION	TYPE OF MARK
CP-220	1482389.5789	386311.3408	593.11	PK NAIL
CP-342	1482636.7323	386435.6235	592.22	PK NAIL
CP-646	1482629.4597	386597.7566	592.88	PK NAIL
CP-753	1482482.6187	386690.0386	594.23	PK NAIL
CP-1036	1482195.0796	387323.6417	594.92	PK NAIL
CP-1136	1482256.0642	387624.3804	594.11	CUT CROSS
CP-1768	1482971.6646	386810.3153	596.82	CUT CROSS
CP-1950	1482505.7870	387902.1901	596.69	CUT CROSS

WORKLIMIT POINT COORDINATES											
POINT NAME	NORTHING	EASTING	POINT NAME	NORTHING	EASTING	POINT NAME	NORTHING	EASTING	POINT NAME	NORTHING	EASTING
W1	1482383.75	385958.48	W26	1482752.73	386350.83	W48	1482362.87	387210.49	W70	1482403.02	387307.58
W2	1482322.52	385958.48	W27	1482779.90	386377.98	W49	1482362.87	387237.90	W71	1482402.15	387266.65
W3	1482322.52	385949.05	W28	1482759.96	386389.59	W50	1482251.38	387267.58	W72	1482435.28	387269.97
W4	1482304.61	385949.65	W29	1482790.47	386442.36	W51	1482336.97	387266.51	W73	1482470.29	387102.20
W5	1482304.20	385884.59	W30	1482811.36	386442.20	W52	1482332.30	387389.76	W74	1482545.41	386987.97
W6	1482274.20	385884.78	W31	1482811.66	386476.42	W53	1482342.30	387389.86	W75	1482609.43	386911.53
W7	1482274.63	385953.42	W32	1482819.98	386589.87	W54	1482342.47	387411.48	W76	1482730.98	386837.84
W11	1482170.67	386026.10	W33	1482716.85	386703.32	W55	1482327.03	387411.67	W77	1482816.28	386771.12
W12	1482288.50	386018.15	W34	1482661.58	386748.43	W56	1482325.57	387516.91	W78	1482914.86	386674.45
W13	1482290.66	385993.52	W35	1482661.58	386783.27	W57	1482315.16	387516.71	W79	1482955.34	386589.87
W14	1482360.84	385995.20	W36	1482627.60	386803.32	W58	1482279.97	387629.00	W80	1482944.00	386475.91
W15	1482360.76	386048.43	W37	1482611.29	386803.32	W59	1482270.54	387654.22	W81	1482892.37	386343.12
W16	1482396.63	386106.65	W38	1482592.51	386817.89	W60	1482254.64	387696.38	W82	1482668.41	386137.93
W17	1482472.58	386155.25	W39	1482520.51	386883.32	W61	1482255.04	387744.32	W83	1482507.37	386050.64
W18	1482533.99	386199.99	W40	1482445.08	386964.56	W62	1482222.56	387744.36	W84	1482452.29	386045.99
W19	1482597.60	386243.37	W41	1482439.19	386964.56	W63	1482195.36	387781.94	W70A	1482406.86	387337.22
W20	1482663.77	386281.71	W42	1482397.43	387039.56	W64	1482195.50	387798.79	W69A	1482415.56	387415.57
W21	1482693.62	386308.79	W43	1482395.56	387039.56	W65	1482363.28	387631.63	W65A	1482319.48	387768.74
W22	1482711.60	386289.08	W44	1482365.29	387102.20	W66	1482409.61	387631.72	W50A	1482236.00	387248.52
W23	1482736.51	386312.20	W45	1482368.10	387102.20	W67	1482419.37	387586.89	W50B	1482352.15	387247.07
W24	1482718.35	386331.48	W46	1482347.12	387165.35	W68	1482421.96	387510.88	W32A	1482815.17	386595.15
W25	1482740.70	386362.73	W47	1482368.17	387165.35	W69	1482417.13	387384.05	W32B	1482817.17	386595.15
									W32C	1482817.17	386609.15
									W32D	1482802.45	386609.15

WORKLIMIT CURVE DATA			
POINT NAME	POINT TYPE	NORTHING	EASTING
WL CURVE 1- LEFT			
W8	PC	1482182.34	385957.28
W9	PI	1482148.63	385959.07
W10	PT	1482158.70	385991.13
RADIUS =	27.97′		
LENGTH =	45.03′		
DELTA =	75° 35′53″		
TANGENT=	33.60′		

NOTES:

1. FOR SYMBOLS, ABBREVIATIONS, AND GENERAL NOTES SEE SHEET G-03.
2. ALL COORDINATES ARE BASED ON INDIANA STATE PLANE COORDINATES ZONE WEST, NAD27.
3. FOR CROSS SECTIONS SEE SHEETS C-15, C-16 AND C-17.
4. FOR PLAN AND PROFILE SEE SHEETS C-05, C-06 AND C-07.

100 50 0 100 200
1 INCH = 100 FEET

US Army Corps of Engineers
Chicago District

SYMBOL	AMENDMENT DESCRIPTION	DATE APPROVED	SYMBOL	DESCRIPTION	DATE APPROVED

DESIGNED BY: MWC
DATE: FEBRUARY 2009
DRAWN BY: JW/DB
SCALE: AS SHOWN
CHECKED BY: JAG
SOLICITATION NUMBER: W912P6-09-B-0002
SUBMITTED BY: JOHN A. GROBOSKI, P.E.
DATE: 7/31/08

U.S. ARMY ENGINEER DISTRICT
CORPS OF ENGINEERS
CHICAGO, ILLINOIS

LITTLE CALUMET RIVER, INDIANA
LOCAL FLOOD PROTECTION
STAGE VII - FLOODWALL

WORK LIMITS AND CONTROL DATA
STA. 7S 0+00 TO 7S 24+98

SHEET REFERENCE NUMBER:
C-01
SHEET 10 OF 79

PLOT DATE: 2/17/2009
FILENAME: C:\Documents and Settings\h8ecmc9\My Documents\PW_Working_Directory_MC\dms17071\LCS7_C-01.dgn

LCS7_C-01.dgn 2/17/2009 11:05:09 AM

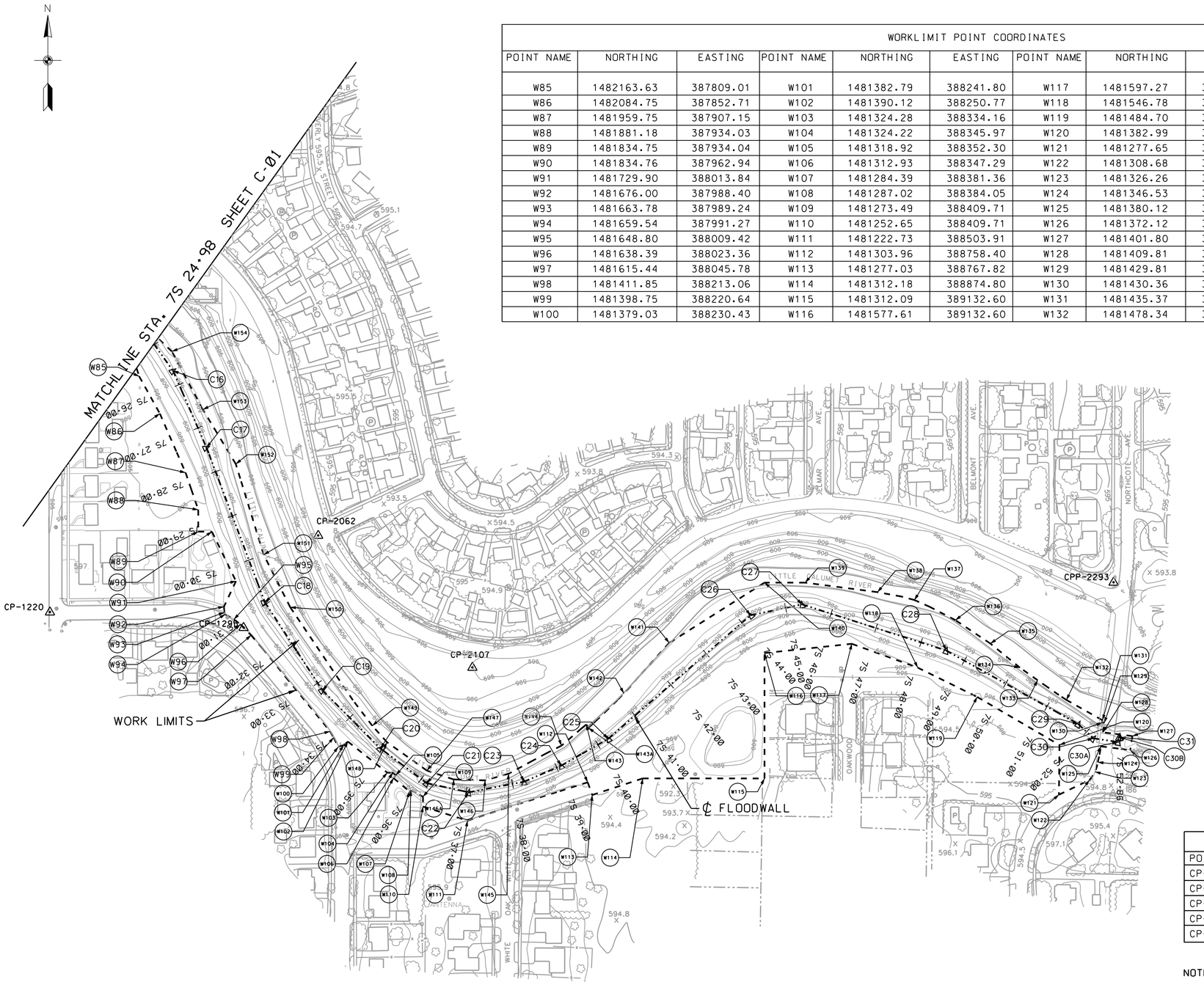

WORKLIMIT POINT COORDINATES											
POINT NAME	NORTHING	EASTING	POINT NAME	NORTHING	EASTING	POINT NAME	NORTHING	EASTING	POINT NAME	NORTHING	EASTING
W85	1482163.63	387809.01	W101	1481382.79	388241.80	W117	1481597.27	389317.37	W133	1481520.15	389710.65
W86	1482084.75	387852.71	W102	1481390.12	388250.77	W118	1481546.78	389456.83	W134	1481546.78	389673.16
W87	1481959.75	387907.15	W103	1481324.28	388334.16	W119	1481484.70	389582.79	W135	1481597.75	389610.72
W88	1481881.18	387934.03	W104	1481324.22	388345.97	W120	1481382.99	389756.87	W136	1481647.27	389536.73
W89	1481834.75	387934.04	W105	1481318.92	388352.30	W121	1481277.65	389755.79	W137	1481689.96	389449.86
W90	1481834.76	387962.94	W106	1481312.93	388347.29	W122	1481308.68	389820.21	W138	1481706.64	389371.71
W91	1481729.90	388013.84	W107	1481284.39	388381.36	W123	1481326.26	389831.93	W139	1481726.78	389218.53
W92	1481676.00	387988.40	W108	1481287.02	388384.05	W124	1481346.53	389837.93	W140	1481726.78	389132.60
W93	1481663.78	387989.24	W109	1481273.49	388409.71	W125	1481380.12	389844.65	W141	1481599.18	388930.96
W94	1481659.54	387991.27	W110	1481252.65	388409.71	W126	1481372.12	389906.77	W142	1481492.41	388834.81
W95	1481648.80	388009.42	W111	1481222.73	388503.91	W127	1481401.80	389911.22	W143	1481426.40	388755.54
W96	1481638.39	388023.36	W112	1481303.96	388758.40	W128	1481409.81	389848.94	W143A	1481419.26	388759.77
W97	1481615.44	388045.78	W113	1481277.03	388767.82	W129	1481429.81	389851.66	W144	1481381.54	388702.83
W98	1481411.85	388213.06	W114	1481312.18	388874.80	W130	1481430.36	389847.34	W145	1481322.14	388591.05
W99	1481398.75	388220.64	W115	1481312.09	389132.60	W131	1481435.37	389847.99	W146	1481308.05	388541.15
W100	1481379.03	388230.43	W116	1481577.61	389132.60	W132	1481478.34	389771.69	W146A	1481309.96	388474.78
									W147	1481328.65	388418.12
									W148	1481388.84	388333.54
									W149	1481423.68	388302.47
									W150	1481674.62	388128.73
									W151	1481785.85	388072.52
									W152	1481977.85	388013.54
									W153	1482093.27	387943.75
									W154	1482216.29	387878.28

FLOODWALL CENTERLINE COORDINATES				
POINT NAME	DESCRIPTION	NORTHING	EASTING	STATION
C16	PI	1482175.42	387880.61	25+68.01
C17	PI	1482012.69	387951.51	27+45.52
C18	PI	1481685.49	388074.89	30+95.20
C19	PI	1481498.61	388196.91	33+18.39
C20	PI	1481375.70	388319.63	34+92.08
C21	PI	1481302.20	388417.47	36+14.45
C22	PI	1481282.83	388506.57	37+05.63
C23	PI	1481305.11	388623.15	38+24.32
C24	PI	1481338.92	388701.88	39+10.01
C25	PI	1481396.00	388801.75	40+25.03
C26	PI	1481657.76	389103.13	44+24.22
C27	PI	1481680.68	389212.10	45+35.57
C28	PI	1481582.94	389517.18	48+55.92
C29	PI	1481427.12	389797.08	51+76.28
C30	PI	1481397.07	389828.56	52+19.80
C30A	PI	1481389.28	389880.75	52+52.77
C30B	PI	1481399.38	389882.26	52+82.78
C31	POE	1481399.38	389885.26	52+85.77

CONTROL POINT COORDINATES				
POINT NAME	NORTHING	EASTING	ELEVATION	TYPE OF MARK
CP-1220	1481664.5013	387620.1071	595.59	PK NAIL
CP-1295	1481631.6871	388029.9384	595.21	PK NAIL
CP-2107	1481547.3172	388514.3328	594.53	CAPPED IRON ROD
CP-2062	1481826.7495	388187.9074	594.88	PK NAIL
CP-2293	1481727.5660	389871.4370	595.20	CAPPED IRON ROD

NOTES:

1. FOR SYMBOLS, ABBREVIATIONS, AND GENERAL NOTES SEE SHEET G-03.
2. ALL COORDINATES ARE BASED ON INDIANA STATE PLANE COORDINATES ZONE WEST, NAD27.
3. FOR CROSS SECTIONS SEE SHEETS C-17, C-18, C-19 AND C-20.
4. FOR PLAN AND PROFILE SEE SHEETS C-07, C-08 AND C-09.
5. THE WORK LIMITS EAST OF NORTHCOTE AVE FOR THIS PROJECT OVERLAP THE WORK LIMITS OF THE LITTLE CALUMET RIVER STAGE 5 PHASE 2 LEVEE PROJECT CURRENTLY UNDER CONSTRUCTION. THE CONTRACTOR CANNOT WORK IN THIS AREA UNTIL THE STAGE 5 PHASE 2 CONTRACTOR HAS COMPLETED WORK IN THIS AREA.

100 50 0 100 200
1 INCH = 100 FEET

US Army Corps of Engineers
Chicago District

SYMBOL	AMENDMENT DESCRIPTION	DATE APPROVED	SYMBOL	DESCRIPTION	DATE APPROVED

DESIGNED BY: MWC
DATE: FEBRUARY 2009
DRAWN BY: JW/DB
SCALE: AS SHOWN
CHECKED BY: JAG
SOLICITATION NUMBER: W912P6-09-B-0002
SUBMITTED BY: JOHN A. GROBOSKI, P.E.
DATE: 7/31/08

U.S. ARMY ENGINEER DISTRICT
CORPS OF ENGINEERS
CHICAGO, ILLINOIS

LITTLE CALUMET RIVER, INDIANA
LOCAL FLOOD PROTECTION
STAGE VII - FLOODWALL

WORK LIMITS AND CONTROL DATA
STA. 7S 24+98 TO 7S 52+86

SHEET REFERENCE NUMBER:
C-02
SHEET 11 OF 79

PLOT DATE: 2/17/2009
FILENAME: C:\Documents and Settings\hSlecmc9\My Documents\PW_Working_Directory_MC\dms17071\LCS7_C-02.dgn

LCS7_C-02.dgn 2/17/2009 11:07:25 AM

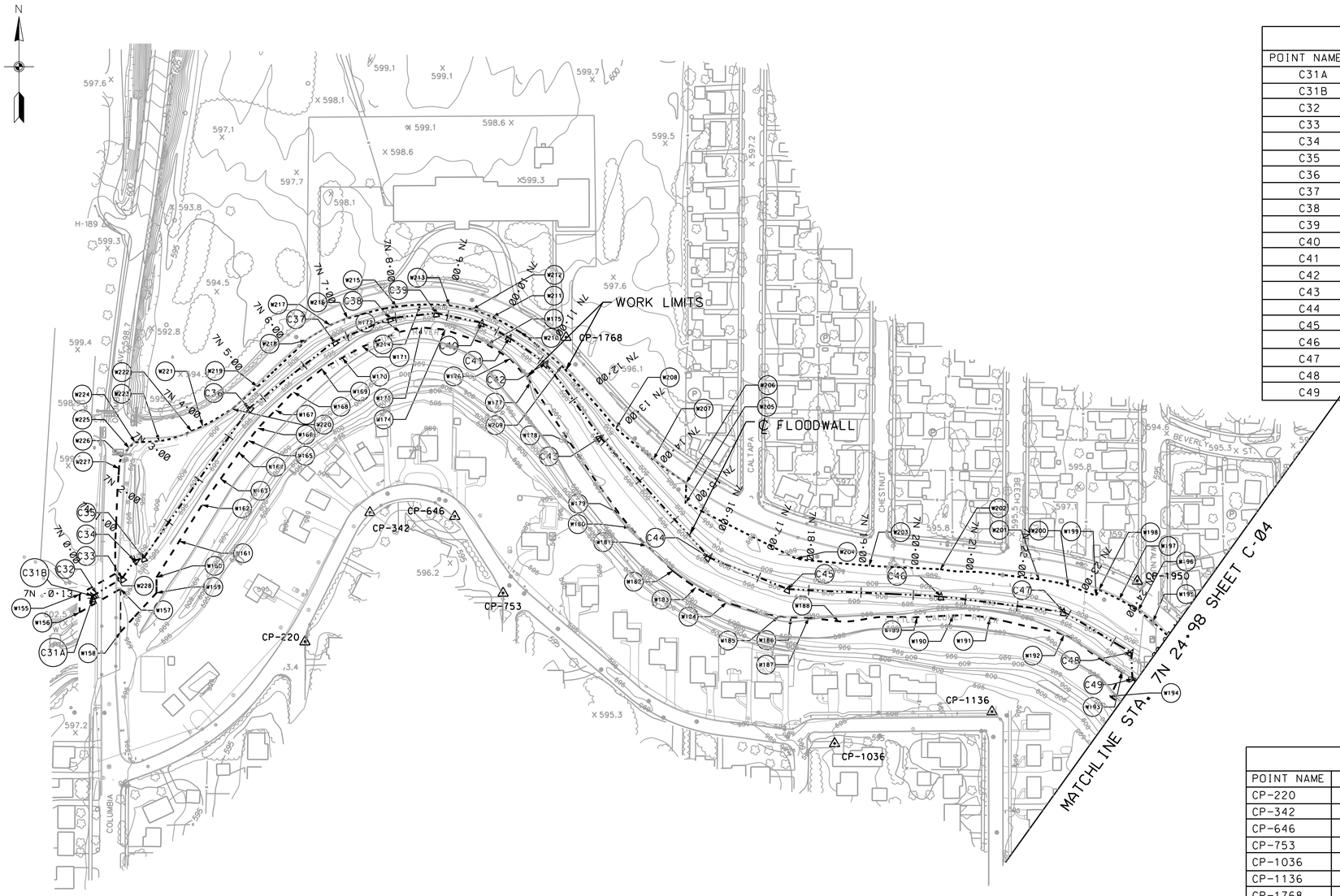

FLOODWALL CENTERLINE COORDINATES				
POINT NAME	DESCRIPTION	NORTHING	EASTING	STATION
C31A	POB	1482472.64	385905.75	-0+12.75
C31B	PI	1482477.01	385905.75	-0+08.39
C32	SEE NOTE 5	1482481.30	385912.96	0+00.00
C33	PI	1482510.50	385961.94	0+57.02
C34	PI	1482544.67	385985.81	0+98.71
C35	PI	1482549.56	386003.12	1+16.69
C36	PI	1482835.51	386204.49	4+66.43
C37	PI	1482963.07	386367.12	6+73.12
C38	PI	1483007.77	386473.10	7+88.14
C39	PI	1483017.77	386561.89	8+77.50
C40	PI	1482999.39	386649.33	9+66.85
C41	PI	1482970.79	386702.10	10+26.87
C42	PI	1482921.73	386772.36	11+12.56
C43	PI	1482780.00	386875.88	12+88.08
C44	PI	1482550.64	387083.48	15+97.43
C45	PI	1482489.96	387234.43	17+60.12
C46	PI	1482476.21	387526.96	20+52.97
C47	PI	1482446.49	387761.10	22+89.00
C48	PI	1482368.69	387890.48	24+39.96
C49	PI	1482318.08	387892.75	24+90.62

CONTROL POINT COORDINATES				
POINT NAME	NORTHING	EASTING	ELEVATION	TYPE OF MARK
CP-220	1482389.5789	386311.3408	593.11	PK NAIL
CP-342	1482636.7323	386435.6235	592.22	PK NAIL
CP-646	1482629.4597	386597.7566	592.88	PK NAIL
CP-753	1482482.6187	386690.0386	594.23	PK NAIL
CP-1036	1482195.0796	387323.6417	594.92	PK NAIL
CP-1136	1482256.0642	387624.3804	594.11	CUT CROSS
CP-1768	1482971.6646	386810.3153	596.82	CUT CROSS
CP-1950	1482505.7870	387902.1901	596.69	CUT CROSS

WORKLIMIT POINT COORDINATES											
POINT NAME	NORTHING	EASTING	POINT NAME	NORTHING	EASTING	POINT NAME	NORTHING	EASTING	POINT NAME	NORTHING	EASTING
W155	1482480.03	385880.75	W177	1482885.39	386742.50	W199	1482477.24	387823.18	W221	1482801.72	386115.85
W156	1482445.40	385880.77	W178	1482768.73	386818.74	W200	1482496.93	387769.77	W222	1482792.01	386094.76
W157	1482490.29	385958.53	W179	1482633.87	386912.38	W201	1482508.72	387714.13	W223	1482772.60	386032.83
W158	1482407.75	385958.53	W180	1482607.32	386933.09	W202	1482527.87	387525.77	W224	1482770.47	385986.60
W159	1482482.66	386027.66	W181	1482572.95	386964.53	W203	1482534.47	387389.70	W225	1482759.42	385975.48
W160	1482512.40	386027.66	W182	1482525.08	387014.61	W204	1482548.23	387249.97	W226	1482742.32	385961.04
W161	1482581.58	386071.19	W183	1482493.27	387058.41	W205	1482654.35	387038.82	W227	1482720.48	385956.11
W162	1482650.76	386114.71	W184	1482464.78	387117.36	W206	1482693.04	387040.09	W228	1482519.34	385948.85
W163	1482700.64	386150.12	W185	1482437.94	387216.66	W207	1482737.58	386977.03			
W164	1482750.52	386185.54	W186	1482435.24	387239.97	W208	1482797.30	386905.47			
W165	1482774.01	386203.47	W187	1482435.29	387274.01	W209	1482916.76	386802.15			
W166	1482797.51	386221.39	W188	1482428.52	387330.56	W210	1482981.43	386722.69			
W167	1482832.10	386255.18	W189	1482436.35	387481.42	W211	1483010.16	386669.60			
W168	1482866.69	386288.98	W190	1482439.55	387550.82	W212	1483024.73	386630.75			
W169	1482910.56	386343.65	W191	1482434.72	387620.00	W213	1483032.01	386587.54			
W170	1482932.11	386382.59	W192	1482402.42	387761.97	W214	1483034.24	386532.19			
W171	1482953.65	386421.53	W193	1482331.29	387873.18	W215	1483029.79	386486.92			
W172	1482981.93	386493.06	W194	1482285.06	387849.97	W216	1483007.53	386392.88			
W173	1482990.29	386534.24	W195	1482427.58	387932.00	W217	1482994.78	386359.55			
W174	1482986.02	386579.32	W196	1482449.01	387903.52	W218	1482966.15	386314.42			
W175	1482957.74	386659.64	W197	1482470.38	387867.30	W219	1482877.03	386220.69			
W176	1482930.40	386703.63	W198	1482488.86	387828.84	W220	1482834.29	386172.13			

NOTES:

1. FOR SYMBOLS, ABBREVIATIONS, AND GENERAL NOTES SEE SHEET G-03.
2. ALL COORDINATES ARE BASED ON INDIANA STATE PLANE COORDINATES ZONE WEST, NAD27.
3. FOR CROSS SECTIONS SEE SHEETS C-21, C-22 AND C-23.
4. FOR PLAN AND PROFILE SEE SHEETS C-10, C-11 AND C-12.
5. POINT C32 IS NOT A PI POINT. IT IS GIVEN SO THE CONTRACTOR HAS A REFERNCE POINT WHEN LAYING OUT THE NEGATIVE STATIONING.

100 50 0 100 200
1 INCH = 100 FEET

US Army Corps of Engineers
Chicago District

SYMBOL	AMENDMENT DESCRIPTION	DATE APPROVED	SYMBOL	DESCRIPTION	DATE APPROVED

DESIGNED BY: MWC
DATE: FEBRUARY 2009
DRAWN BY: JW/DB
SCALE: AS SHOWN
CHECKED BY: JAG
SOLICITATION NUMBER: W912P6-09-B-0002
JOHN A. GROBOSKI, P.E.
SUBMITTED BY:
DATE: 7/31/08

U.S. ARMY ENGINEER DISTRICT
CORPS OF ENGINEERS
CHICAGO, ILLINOIS

LITTLE CALUMET RIVER, INDIANA
LOCAL FLOOD PROTECTION
STAGE VII - FLOODWALL

WORK LIMITS AND CONTROL DATA
STA. 7N 0+00 TO 7N 24+98

SHEET REFERENCE NUMBER:
C-03
SHEET 12 OF 79

PLOT DATE: 2/17/2009
FILENAME: C:\Documents and Settings\hblecmc9\My Documents\PW_Working_Directory_MC\dms17071\LCS7_C-03.dgn

LCS7_C-03.dgn 2/17/2009 11:09:16 AM

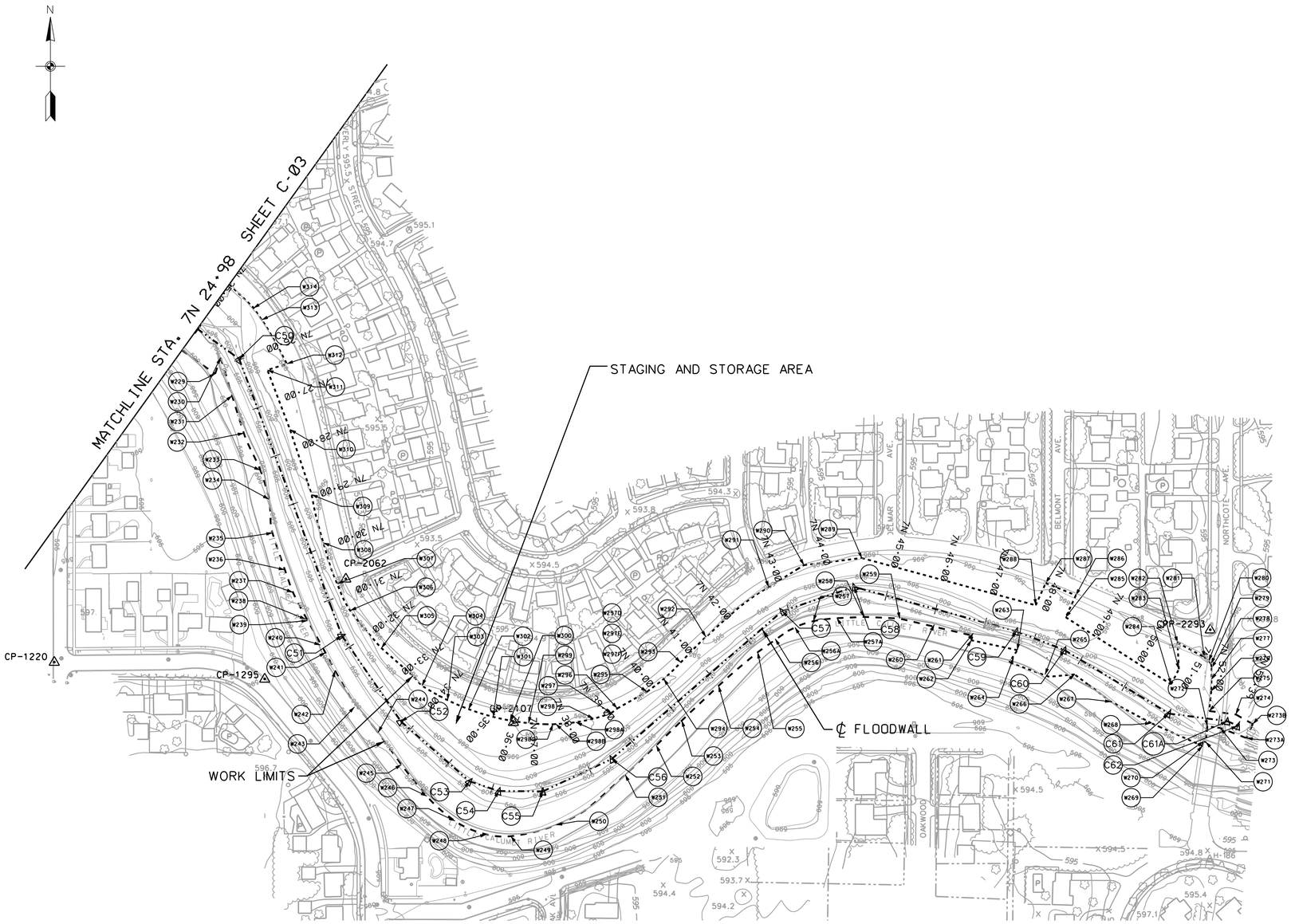

US Army Corps of Engineers
Chicago District

FLOODWALL CENTERLINE COORDINATES				
POINT NAME	DESCRIPTION	NORTHING	EASTING	STATION
C50	PI	1482255.22	387980.18	25+98.31
C51	PI	1481715.93	388180.19	31+73.49
C52	PI	1481548.76	388295.39	33+76.51
C53	PI	1481432.19	388429.05	35+53.87
C54	PI	1481413.32	388486.03	36+13.89
C55	PI	1481412.65	388571.72	36+99.57
C56	PI	1481475.68	388705.65	38+47.60
C57	PI	1481763.66	389037.68	42+87.12
C58	PI	1481811.06	389177.91	44+35.14
C59	PI	1481724.49	389493.95	47+62.82
C60	PI	1481688.15	389587.49	48+63.18
C61	PI	1481564.24	389790.53	51+01.03
C61A	PI	1481549.56	389904.57	52+16.02
C62	POE	1481540.31	389925.26	52+38.68

CONTROL POINT COORDINATES				
POINT NAME	NORTHING	EASTING	ELEVATION	TYPE OF MARK
CP-1220	1481664.5013	387620.1071	595.59	PK NAIL
CP-1295	1481631.6871	388029.9384	595.21	PK NAIL
CP-2107	1481547.3172	388514.3328	594.53	CAPPED IRON ROD
CP-2062	1481826.7495	388187.9074	594.88	PK NAIL
CP-2293	1481727.5660	389871.4370	595.20	CAPPED IRON ROD

NOTES:

1. FOR SYMBOLS, ABBREVIATIONS, AND GENERAL NOTES SEE SHEET G-03.
2. ALL COORDINATES ARE BASED ON INDIANA STATE PLANE COORDINATES ZONE WEST, NAD27.
3. FOR CROSS SECTIONS SEE SHEETS C-23, C-24, C-25 AND C-26.
4. FOR PLAN AND PROFILE SEE SHEETS C-12, C-13 AND C-14.
5. THE WORK LIMITS EAST OF NORTHCOTE AVE FOR THIS PROJECT OVERLAP THE WORK LIMITS OF THE LITTLE CALUMET RIVER STAGE 5 PHASE 2 LEVEE PROJECT CURRENTLY UNDER CONSTRUCTION. THE CONTRACTOR CANNOT WORK IN THIS AREA UNTIL THE STAGE 5 PHASE 2 CONTRACTOR HAS COMPLETED WORK IN THIS AREA.

SYMBOL	AMENDMENT DESCRIPTION	DATE APPROVED	SYMBOL	DESCRIPTION	DATE APPROVED

WORKLIMIT POINT COORDINATES																	
POINT NAME	NORTHING	EASTING	POINT NAME	NORTHING	EASTING	POINT NAME	NORTHING	EASTING	POINT NAME	NORTHING	EASTING	POINT NAME	NORTHING	EASTING	POINT NAME	NORTHING	EASTING
W229	1482226.11	387933.36	W245	1481464.86	388296.19	W261	1481720.35	389409.72	W277	1481630.86	389873.78	W293	1481663.74	388840.15	W309	1481990.77	388121.30
W230	1482257.37	387943.99	W246	1481403.44	388345.73	W262	1481706.99	389406.13	W278	1481653.55	389874.24	W294	1481631.80	388807.03	W310	1482117.59	388079.15
W231	1482183.29	387966.41	W247	1481354.95	388400.51	W263	1481687.82	389495.74	W279	1481661.00	389873.08	W295	1481606.77	388774.41	W311	1482233.47	388035.18
W232	1482110.41	387989.26	W248	1481328.77	388461.58	W264	1481672.66	389488.25	W280	1481666.76	389868.68	W296	1481574.30	388716.73	W312	1482245.68	388073.11
W233	1482038.50	388021.43	W249	1481325.37	388509.20	W265	1481673.04	389553.59	W281	1481674.21	389859.63	W297	1481565.21	388704.98	W313	1482331.23	388024.19
W234	1481981.70	388038.38	W250	1481347.32	388597.15	W266	1481640.41	389549.83	W282	1481702.33	389807.66	W298	1481554.36	388670.29	W314	1482354.29	388008.27
W235	1481916.06	388044.96	W251	1481445.03	388732.17	W267	1481587.21	389678.57	W283	1481650.60	389810.28	W299	1481545.62	388543.85	W298A	1481547.38	388636.06
W236	1481844.20	388069.21	W252	1481502.36	388792.57	W268	1481545.64	389756.43	W284	1481621.29	389795.24	W300	1481550.66	388507.76	W298B	1481543.91	388596.85
W237	1481800.19	388085.09	W253	1481550.53	388842.16	W269	1481501.13	389856.45	W285	1481751.87	389589.93	W301	1481557.82	388474.85	W298C	1481543.29	388591.18
W238	1481747.96	388109.93	W254	1481618.16	388913.79	W270	1481509.61	389857.54	W286	1481794.62	389609.69	W302	1481572.80	388427.07	W256A	1481732.19	389062.64
W239	1481745.18	388113.75	W255	1481683.69	388990.11	W271	1481508.99	389862.37	W287	1481818.49	389551.03	W303	1481590.43	388386.03	W257B	1481750.10	389144.33
W240	1481697.79	388138.47	W256	1481709.81	389024.09	W272	1481539.41	389865.91	W288	1481775.25	389531.46	W304	1481618.47	388336.42	W273A	1481516.42	389941.97
W241	1481682.96	388148.17	W257	1481744.27	389098.60	W273	1481536.15	389891.27	W289	1481867.28	389192.72	W305	1481691.76	388257.13	W273B	1481543.81	389954.21
W242	1481647.62	388167.01	W258	1481752.49	389196.98	W274	1481562.54	389921.19	W290	1481853.44	389080.08	W306	1481764.85	388196.44			
W243	1481576.95	388204.68	W259	1481749.24	389266.64	W275	1481569.22	389869.34	W291	1481810.58	389011.25	W307	1481817.19	388171.01			
W244	1481527.41	388250.85	W260	1481737.60	389334.04	W276	1481608.16	389873.32	W292	1481713.44	388889.15	W308	1481896.77	388144.17			

100 50 0 100 200
1 INCH = 100 FEET

DESIGNED BY: MWC
DATE: FEBRUARY 2009
DRAWN BY: JW/DB
SCALE: AS SHOWN
CHECKED BY: JAG
SOLICITATION NUMBER: W912P6-09-B-0002
SUBMITTED BY: JOHN A. GROBOSKI, P.E.
DATE: 7/31/08

U.S. ARMY ENGINEER DISTRICT
CORPS OF ENGINEERS
CHICAGO, ILLINOIS

LITTLE CALUMET RIVER, INDIANA
LOCAL FLOOD PROTECTION
STAGE VII - FLOODWALL

WORK LIMITS AND CONTROL DATA
STA. 7N 24+98 TO 7N 52+39

SHEET REFERENCE NUMBER:
C-04
SHEET 13 OF 79

PLOT DATE: 2/17/2009
FILENAME: C:\Documents and Settings\h16ecmc3\My Documents\PW_Working_Directory_MC\dms17071\LCS7_C-04.dgn

LCS7_C-04.dgn 2/17/2009 11:10:53 AM

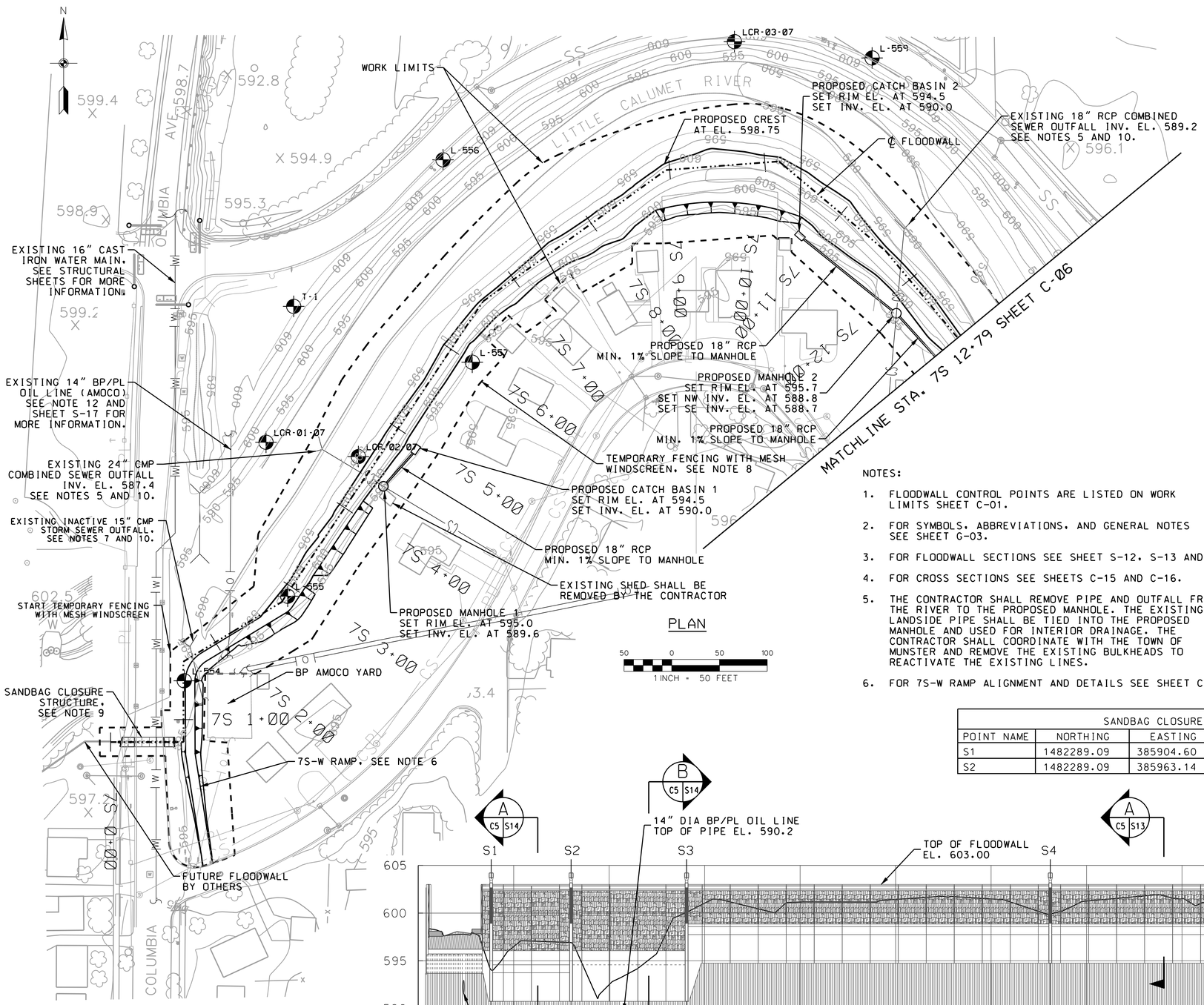

PLAN

50 0 50 100

1 INCH = 50 FEET

PROPOSED STRUCTURE COORDINATES			
STRUCTURE NAME	DESCRIPTION	NORTHING	EASTING
CATCH BASIN 1	CENTER OF STRUCTURE	1,482,595.70	386,618.07
MANHOLE 1	CENTER OF STRUCTURE	1,482,557.09	386,181.73
CATCH BASIN 2	CENTER OF STRUCTURE	1,482,819.43	386,618.07
MANHOLE 2	CENTER OF STRUCTURE	1,482,738.41	386,719.01

NOTES:

1. FLOODWALL CONTROL POINTS ARE LISTED ON WORK LIMITS SHEET C-01.
2. FOR SYMBOLS, ABBREVIATIONS, AND GENERAL NOTES SEE SHEET G-03.
3. FOR FLOODWALL SECTIONS SEE SHEET S-12, S-13 AND S-14.
4. FOR CROSS SECTIONS SEE SHEETS C-15 AND C-16.
5. THE CONTRACTOR SHALL REMOVE PIPE AND OUTFALL FROM THE RIVER TO THE PROPOSED MANHOLE. THE EXISTING LANDSIDE PIPE SHALL BE TIED INTO THE PROPOSED MANHOLE AND USED FOR INTERIOR DRAINAGE. THE CONTRACTOR SHALL COORDINATE WITH THE TOWN OF MUNSTER AND REMOVE THE EXISTING BULKHEADS TO REACTIVATE THE EXISTING LINES.
6. FOR 7S-W RAMP ALIGNMENT AND DETAILS SEE SHEET C-28.

NOTES:

7. THE CONTRACTOR SHALL REMOVE THE EXISTING PIPE AND OUTFALL FROM THE RIVER TO A POINT LANDSIDE 5 FT FROM THE CENTERLINE OF THE PROPOSED FLOODWALL. THE REMAINING PIPE SHALL BE PLUGGED BY FILLING WITH CONCRETE TO A HORIZONTAL DISTANCE FROM THE END OF THE PIPE EQUAL TO ONE TO TWO TIMES THE DIAMETER OF THE PIPE. THE CONTRACTOR SHALL SUPPLY AND INSTALL TEMPORARY AND/OR PERMANENT BULKHEADS AS NECESSARY TO RETAIN THE CONCRETE WITHIN THE PIPE UNTIL IT SETS. THE CONTRACTOR SHALL ENSURE THAT CONCRETE DOES NOT FLOW INTO THE ACTIVE SEWER LINE. THE CONCRETE SHALL COMPLETELY FILL THE COMPLETE INTERIOR OF THE PIPE FOR THE ABOVE SPECIFIED HORIZONTAL DISTANCE.
8. THE TEMPORARY FENCING WITH MESH WINDSCREEN SHALL FOLLOW THE PROJECT WORK LIMITS ON THE LANDSIDE OF THE PROJECT.
9. FOR SANDBAG CLOSURE STRUCTURE DETAILS SEE SHEET S-11.
10. THE EXCAVATION FROM THE REMOVAL OF THE EXISTING PIPES AND OUTFALLS SHALL BE BACKFILLED WITH SATISFACTORY MATERIAL AND COMPACTED ACCORDING TO THE SPECIFICATIONS. IN AREAS WHERE THE EXCAVATION IS DEEPER THAN THE TIP OF THE SHEETPILE WALL AND COHESIONLESS MATERIAL IS PRESENT, THE EXCAVATION SHALL BE BACKFILLED WITH IMPERVIOUS MATERIAL TO 1 FT ABOVE THE SHEETPILE TIP AND COMPACTED ACCORDING TO THE SPECIFICATIONS.
11. FOR DETAILS ON THE PROPOSED MANHOLES AND CATCH BASINS SEE THE SPECIFICATIONS.
12. THE EXISTING UNDERGROUND BP OIL LINES WITHIN THE WORK LIMITS SHALL BE PROTECTED WITH TIMBER MATS AND SHALL NOT BE REMOVED UNTIL 2 WEEKS BEFORE SEEDING OPERATIONS IN THE AREA OF THE UNDERGROUND OIL LINES.

SANDBAG CLOSURE COORDINATES				
POINT NAME	NORTHING	EASTING	STATION	DESCRIPTION
S1	1482289.09	385904.60	0+08.56	INTERSECTION OF ℄ AND WEST EDGE CLOSURE WALL
S2	1482289.09	385963.14	0+67.11	INTERSECTION OF ℄ AND EAST EDGE CLOSURE WALL

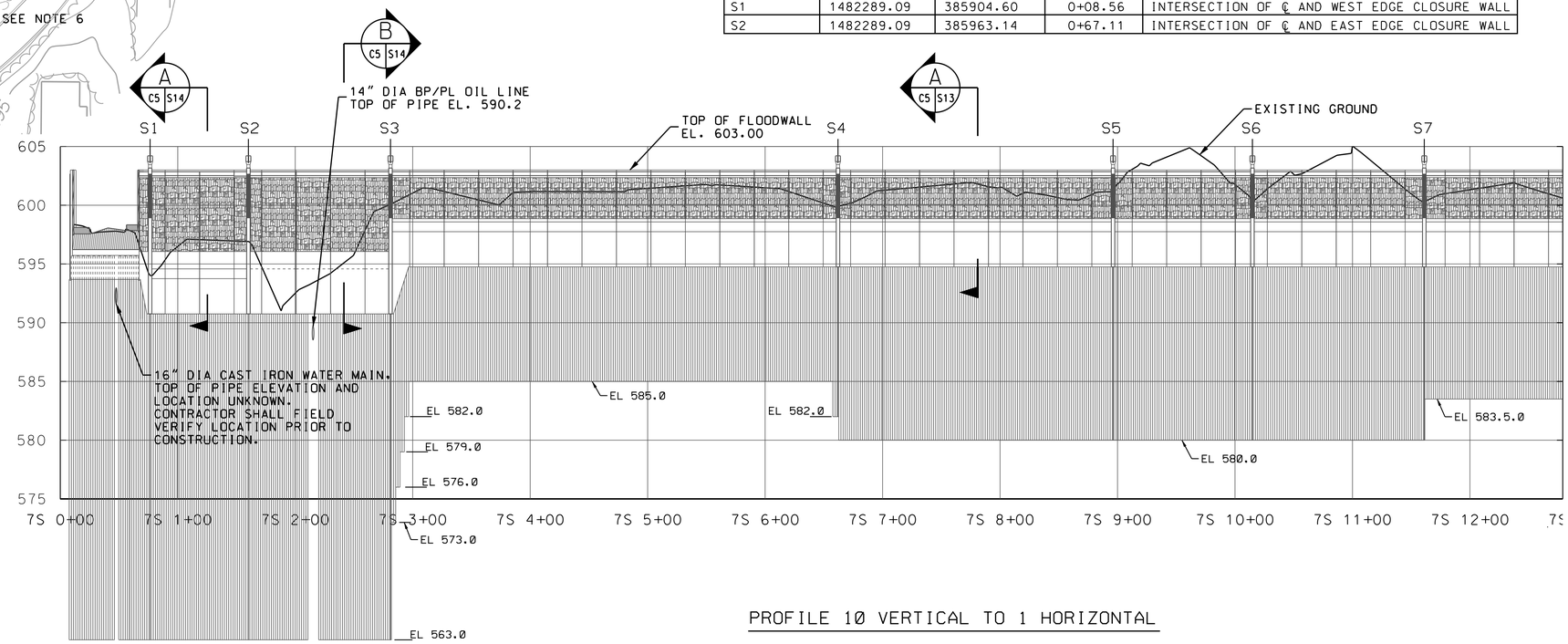

PROFILE 10 VERTICAL TO 1 HORIZONTAL

US Army Corps of Engineers
Chicago District

SYMBOL	AMENDMENT DESCRIPTION	DATE APPROVED	SYMBOL	DESCRIPTION	DATE APPROVED

DESIGNED BY: MWC
DATE: FEBRUARY 2009
DRAWN BY: JW/DB
SCALE: AS SHOWN
CHECKED BY: JAG
SOLICITATION NUMBER: W912P6-09-B-0002
SUBMITTED BY: JOHN A. GROBOSKI, P.E.
DATE: 7/31/08

U.S. ARMY ENGINEER DISTRICT
CORPS OF ENGINEERS
CHICAGO, ILLINOIS

LITTLE CALUMET RIVER, INDIANA
LOCAL FLOOD PROTECTION
STAGE VII - FLOODWALL

PLAN AND PROFILE
STA. 7S 0+00 TO 7S 12+79

SHEET REFERENCE NUMBER:
C-05
SHEET 14 OF 79

PLOT DATE: 2/17/2009
FILENAME: C:\Documents and Settings\bsiecmc3\My Documents\PW_Working_Directory_MCV\dms17071\LCS7_C-05.dgn

LCS7_C-05.dgn 2/17/2009 11:18:05 AM

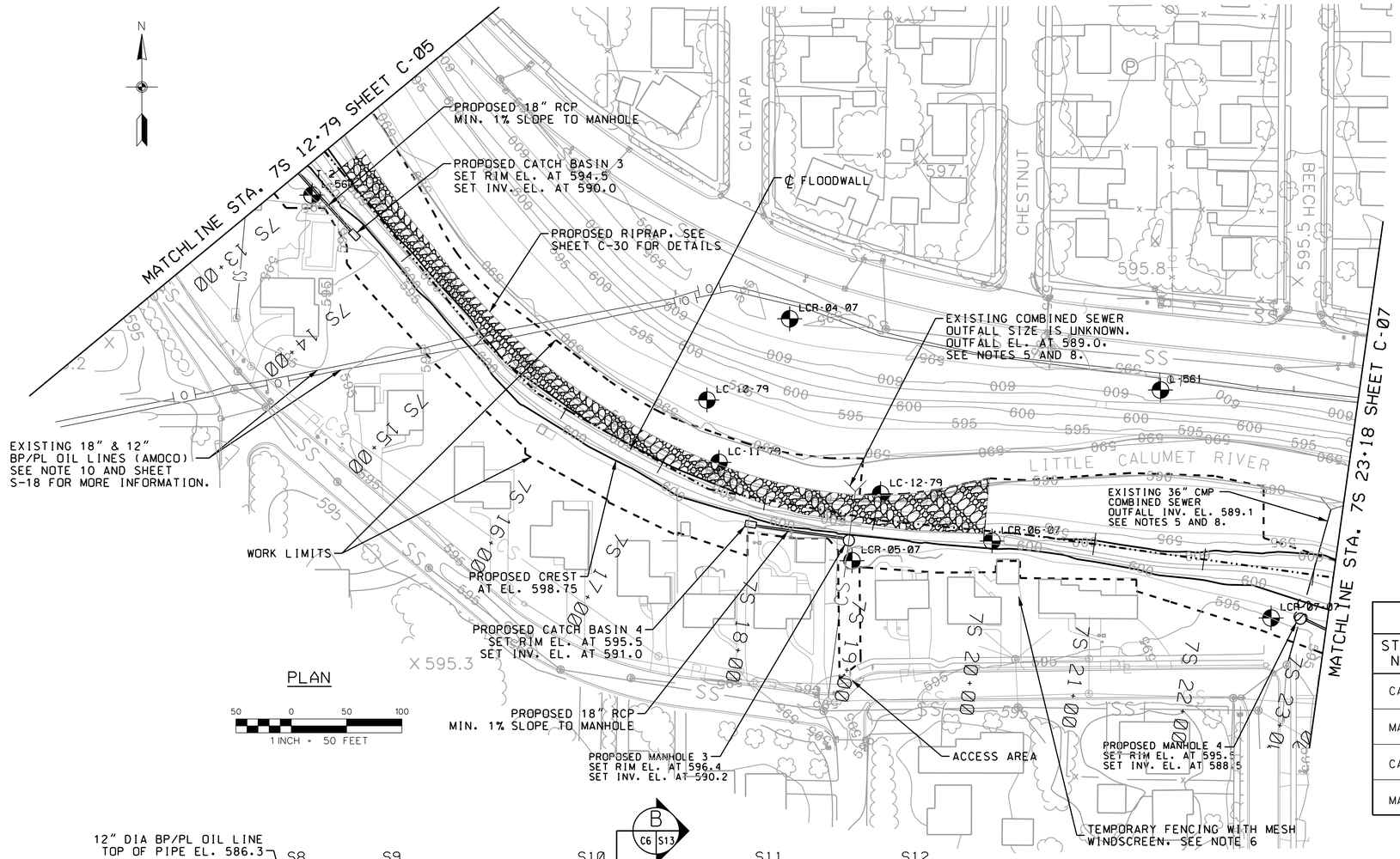

PLAN

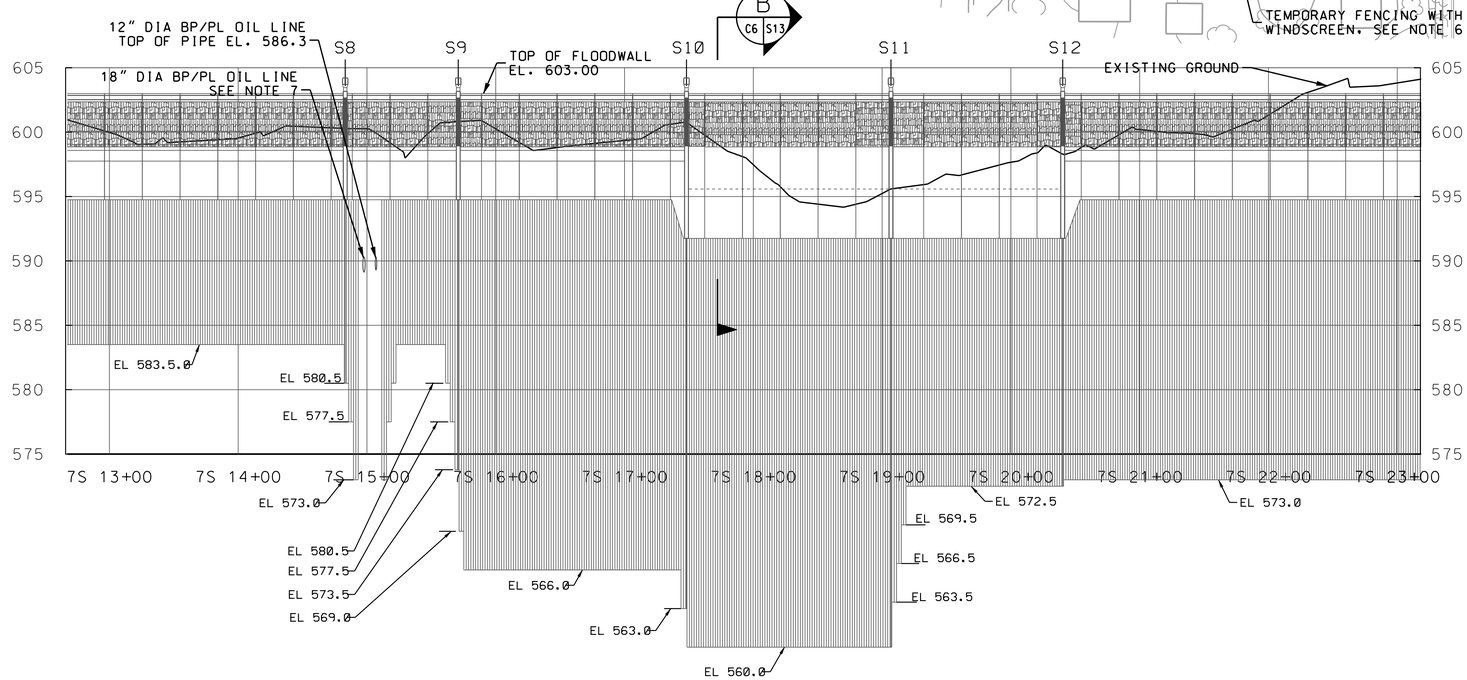

PROFILE 10 VERTICAL TO 1 HORIZONTAL

PROPOSED STRUCTURE COORDINATES

STRUCTURE NAME	DESCRIPTION	NORTHING	EASTING
CATCH BASIN 3	CENTER OF STRUCTURE	1,482,637.34	386,810.25
MANHOLE 3	CENTER OF STRUCTURE	1,482,361.01	387,256.97
CATCH BASIN 4	CENTER OF STRUCTURE	1,482,375.63	387,168.30
MANHOLE 4	CENTER OF STRUCTURE	1,482,290.26	387,664.96

NOTES:

1. FLOODWALL CONTROL POINTS ARE LISTED ON WORK LIMITS SHEET C-01.
2. FOR SYMBOLS, ABBREVIATIONS, AND GENERAL NOTES SEE SHEET G-03.
3. FOR FLOODWALL SECTIONS SEE SHEET S-12, S-13 AND S-14.
4. FOR CROSS SECTIONS SEE SHEETS C-16 AND C-17.
5. THE CONTRACTOR SHALL REMOVE PIPE AND OUTFALL FROM THE RIVER TO THE PROPOSED MANHOLE. THE EXISTING LANDSIDE PIPE SHALL BE TIED INTO THE PROPOSED MANHOLE AND USED FOR INTERIOR DRAINAGE. THE CONTRACTOR SHALL COORDINATE WITH THE TOWN OF MUNSTER AND REMOVE THE EXISTING BULKHEADS TO REACTIVATE THE EXISTING LINES.
6. THE TEMPORARY FENCING WITH MESH WINDSCREEN SHALL FOLLOW THE PROJECT WORK LIMITS ON THE LANDSIDE OF THE PROJECT.
7. THE SURVEYORS WERE UNABLE TO FIND THIS PIPE DURING THE FINAL PIPE DAY LIGHTING OPERATION DONE FOR DESIGN OF THIS PIPE PASSING. THE LOCATION SHOWN IS FROM AN EARLIER LOCATION SURVEY. THE CONTRACTOR SHALL EXCAVATE IN THE AREA OF THE PIPE PASSING UNTIL THIS PIPE IS LOCATED.
8. THE EXCAVATION FROM THE REMOVAL OF THE EXISTING PIPES AND OUTFALLS SHALL BE BACKFILLED WITH SATISFACTORY MATERIAL AND COMPACTED ACCORDING TO THE SPECIFICATIONS. IN AREAS WHERE THE EXCAVATION IS DEEPER THAN THE TIP OF THE SHEETPILE WALL AND COHESIONLESS MATERIAL IS PRESENT, THE EXCAVATION SHALL BE BACKFILLED WITH IMPERVIOUS MATERIAL TO 1 FT ABOVE THE SHEETPILE TIP AND COMPACTED ACCORDING TO THE SPECIFICATIONS.
9. FOR DETAILS ON THE PROPOSED MANHOLES AND CATCH BASINS SEE THE SPECIFICATIONS.
10. THE EXISTING UNDERGROUND BP OIL LINES WITHIN THE WORK LIMITS SHALL BE PROTECTED WITH TIMBER MATS AND SHALL NOT BE REMOVED UNTIL 2 WEEKS BEFORE SEEDING OPERATIONS IN THE AREA OF THE UNDERGROUND OIL LINES.

US Army Corps of Engineers
Chicago District

SYMBOL	AMENDMENT DESCRIPTION	DATE APPROVED	SYMBOL	DESCRIPTION	DATE APPROVED

DESIGNED BY: MWC
DATE: FEBRUARY 2009
DRAWN BY: JW/DB
SCALE: AS SHOWN
CHECKED BY: JAG
SOLICITATION NUMBER: W912P6-09-B-0002
SUBMITTED BY: JOHN A. GROBOSKI, P.E.
DATE: 7/31/08

U.S. ARMY ENGINEER DISTRICT
CORPS OF ENGINEERS
CHICAGO, ILLINOIS

LITTLE CALUMET RIVER, INDIANA
LOCAL FLOOD PROTECTION
STAGE VII - FLOODWALL

PLAN AND PROFILE
STA. 7S 12+79 TO 7S 23+18

SHEET REFERENCE NUMBER:
C-06
SHEET 15 OF 79

PLOT DATE: 2/17/2009
FILENAME: C:\Documents and Settings\h6lecmc5\My Documents\PW_Working_Directory_MC\dms17071\LCS7_C-06.dgn

LCS7_C-06.dgn 2/17/2009 11:19:55 AM

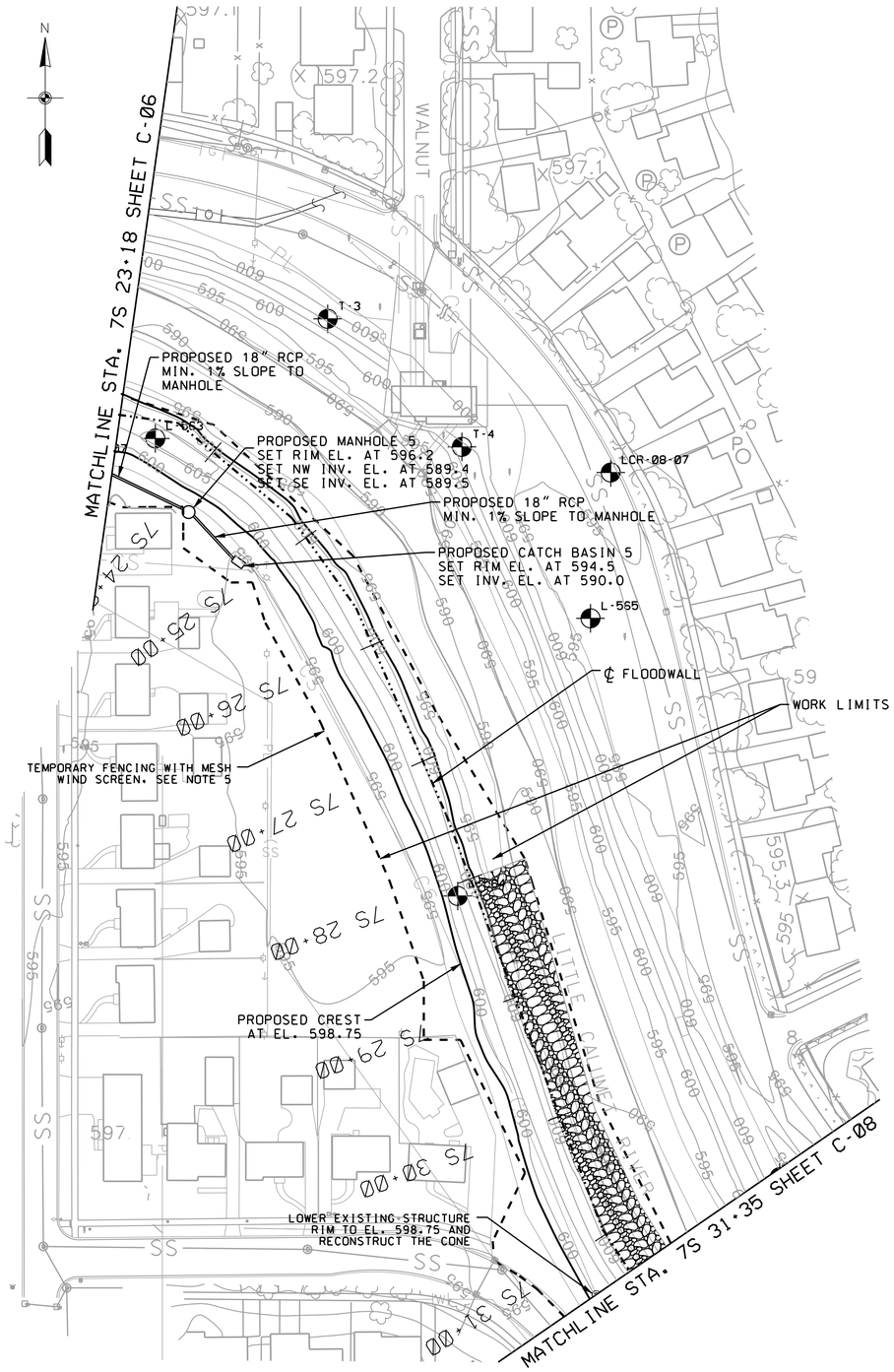

PLAN

50 0 50 100
1 INCH = 50 FEET

PROPOSED STRUCTURE COORDINATES			
STRUCTURE NAME	DESCRIPTION	NORTHING	EASTING
CATCH BASIN 5	CENTER OF STRUCTURE	1,482,211.34	387,787.85
MANHOLE 5	CENTER OF STRUCTURE	1,482,250.86	387,748.55

NOTES:

1. FLOODWALL CONTROL POINTS ARE LISTED ON WORK LIMITS SHEETS C-01 AND C-02.
2. FOR SYMBOLS, ABBREVIATIONS, AND GENERAL NOTES SEE SHEET G-03.
3. FOR FLOODWALL SECTIONS SEE SHEET S-12, S-13 AND S-14.
4. FOR CROSS SECTIONS SEE SHEETS C-17 AND C-18.
5. THE TEMPORARY FENCING WITH MESH WINDSCREEN SHALL FOLLOW THE PROJECT WORK LIMITS ON THE LANDSIDE OF THE PROJECT.
6. FOR DETAILS ON THE PROPOSED MANHOLES AND CATCH BASINS SEE THE SPECIFICATIONS.

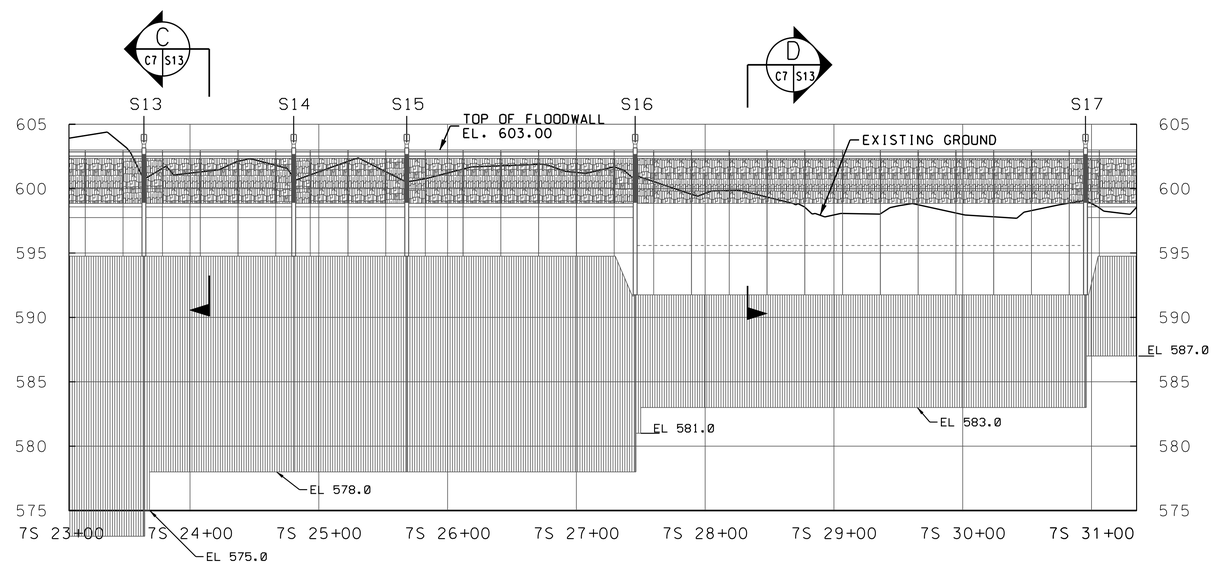

PROFILE 10 VERTICAL TO 1 HORIZONTAL

US Army Corps of Engineers Chicago District

SYMBOL	AMENDMENT DESCRIPTION	DATE	APPROVED	SYMBOL	DESCRIPTION	DATE	APPROVED

DESIGNED BY: MWC
DATE: FEBRUARY 2009
DRAWN BY: JW/DB
SCALE: AS SHOWN
CHECKED BY: JAG
SOLICITATION NUMBER: W912P6-09-B-0002
JOHN A. GROBOSKI, P.E. 7/31/08
SUBMITTED BY:
DATE:

U.S. ARMY ENGINEER DISTRICT
CORPS OF ENGINEERS
CHICAGO, ILLINOIS

LITTLE CALUMET RIVER, INDIANA
LOCAL FLOOD PROTECTION
STAGE VII - FLOODWALL

PLAN AND PROFILE
STA. 7S 23+18 TO 7S 31+35

SHEET REFERENCE NUMBER:
C-07
SHEET 16 OF 79

PLOT DATE: 2/17/2009
FILENAME: C:\Documents and Settings\h6tecmc9\My Documents\PW_Working_Directory_MC\dms17071\LCS7_C-07.dgn

LCS7_C-07.dgn 2/17/2009 11:21:48 AM

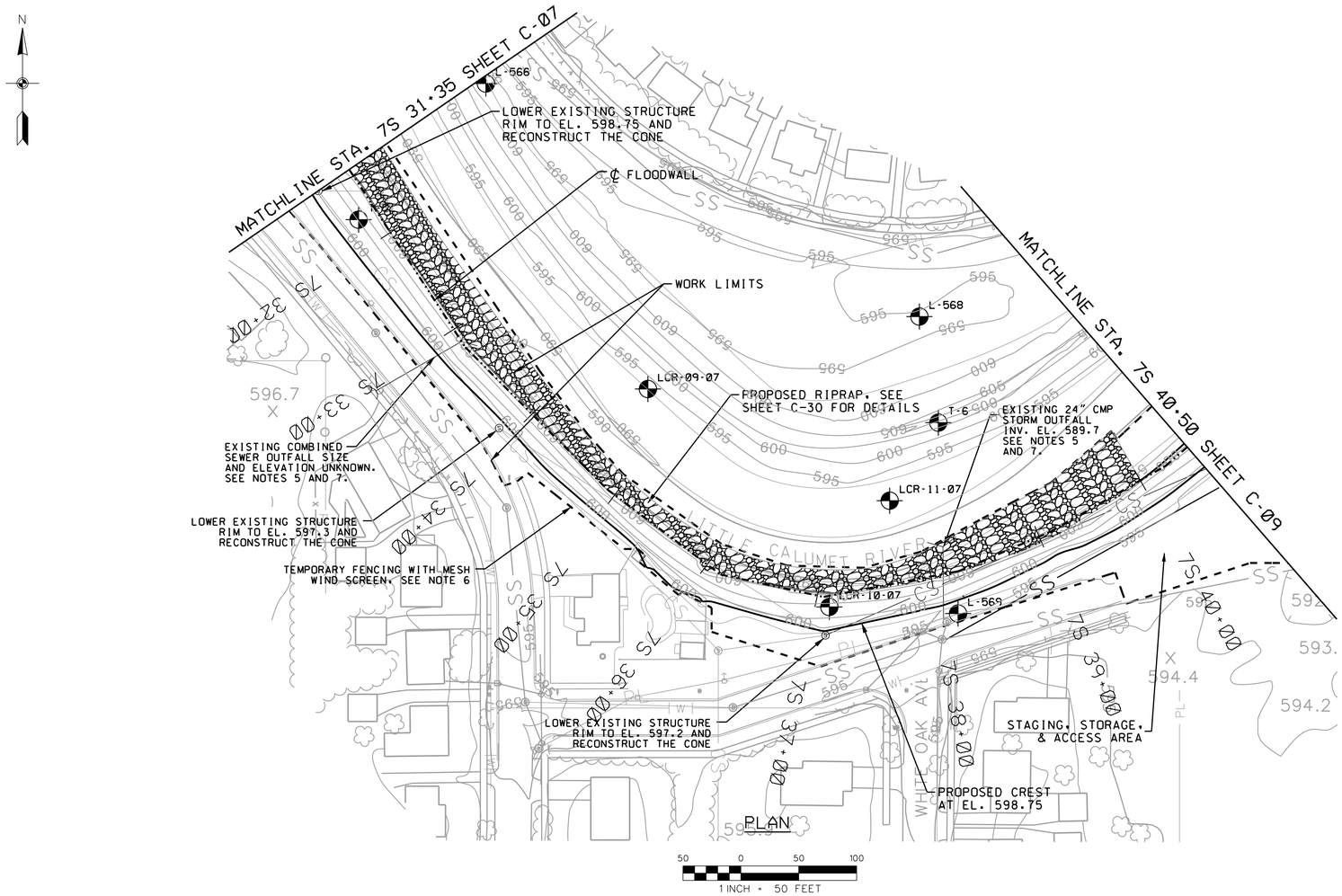

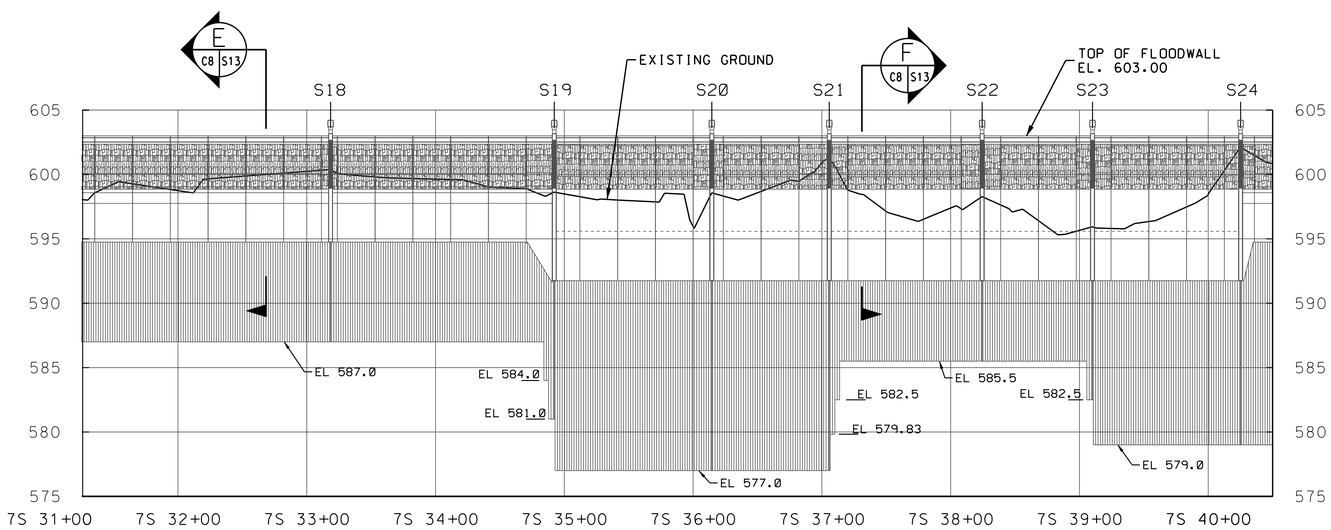

PROFILE 10 VERTICAL TO 1 HORIZONTAL

NOTES:

1. FLOODWALL CONTROL POINTS ARE LISTED ON WORK LIMITS SHEET C-02.
2. FOR SYMBOLS, ABBREVIATIONS, AND GENERAL NOTES SEE SHEET G-03.
3. FOR FLOODWALL SECTIONS SEE SHEET S-12, S-13 AND S-14.
4. FOR CROSS SECTIONS SEE SHEETS C-18 AND C-19.
5. THE CONTRACTOR SHALL REMOVE THE EXISTING PIPE AND OUTFALL FROM THE RIVER TO A POINT LANDSIDE 5 FT FROM THE CENTERLINE OF THE PROPOSED FLOODWALL. THE REMAINING PIPE SHALL BE PLUGGED BY FILLING WITH CONCRETE TO A HORIZONTAL DISTANCE FROM THE END OF THE PIPE EQUAL TO ONE TO TWO TIMES THE DIAMETER OF THE PIPE. THE CONTRACTOR SHALL SUPPLY AND INSTALL TEMPORARY AND/OR PERMANENT BULKHEADS AS NECESSARY TO RETAIN THE CONCRETE WITHIN THE PIPE UNTIL IT SETS. THE CONTRACTOR SHALL ENSURE THAT CONCRETE DOES NOT FLOW INTO THE ACTIVE SEWER LINE. THE CONCRETE SHALL COMPLETELY FILL THE COMPLETE INTERIOR OF THE PIPE FOR THE ABOVE SPECIFIED HORIZONTAL DISTANCE.
6. THE TEMPORARY FENCING WITH MESH WINDSCREEN SHALL FOLLOW THE PROJECT WORK LIMITS ON THE LANDSIDE OF THE PROJECT.
7. THE EXCAVATION FROM THE REMOVAL OF THE EXISTING PIPES AND OUTFALLS SHALL BE BACKFILLED WITH SATISFACTORY MATERIAL AND COMPACTED ACCORDING TO THE SPECIFICATIONS. IN AREAS WHERE THE EXCAVATION IS DEEPER THAN THE TIP OF THE SHEETPILE WALL AND COHESIONLESS MATERIAL IS PRESENT, THE EXCAVATION SHALL BE BACKFILLED WITH IMPERVIOUS MATERIAL TO 1 FT ABOVE THE SHEETPILE TIP AND COMPACTED ACCORDING TO THE SPECIFICATIONS.

US Army Corps of Engineers
Chicago District

SYMBOL	AMENDMENT DESCRIPTION	DATE APPROVED	SYMBOL	DESCRIPTION	DATE APPROVED

DESIGNED BY: MWC
DATE: FEBRUARY 2009
DRAWN BY: JW/DB
SCALE: AS SHOWN
CHECKED BY: JAG
SOLICITATION NUMBER: W912P6-09-B-0002
SUBMITTED BY: JOHN A. GROBOSKI, P.E.
DATE: 7/31/08

U.S. ARMY ENGINEER DISTRICT
CORPS OF ENGINEERS
CHICAGO, ILLINOIS

LITTLE CALUMET RIVER, INDIANA
LOCAL FLOOD PROTECTION
STAGE VII - FLOODWALL

PLAN AND PROFILE
STA. 7S 31+35 TO 7S 40+50

SHEET REFERENCE NUMBER:
C-08
SHEET 17 OF 79

PLOT DATE: 2/17/2009
FILENAME: C:\Documents and Settings\h6lecmc9\My Documents\PW_Working_Directory_MC\dms17071\LCS7_C-08.dgn

LCS7_C-08.dgn 2/17/2009 11:27:02 AM

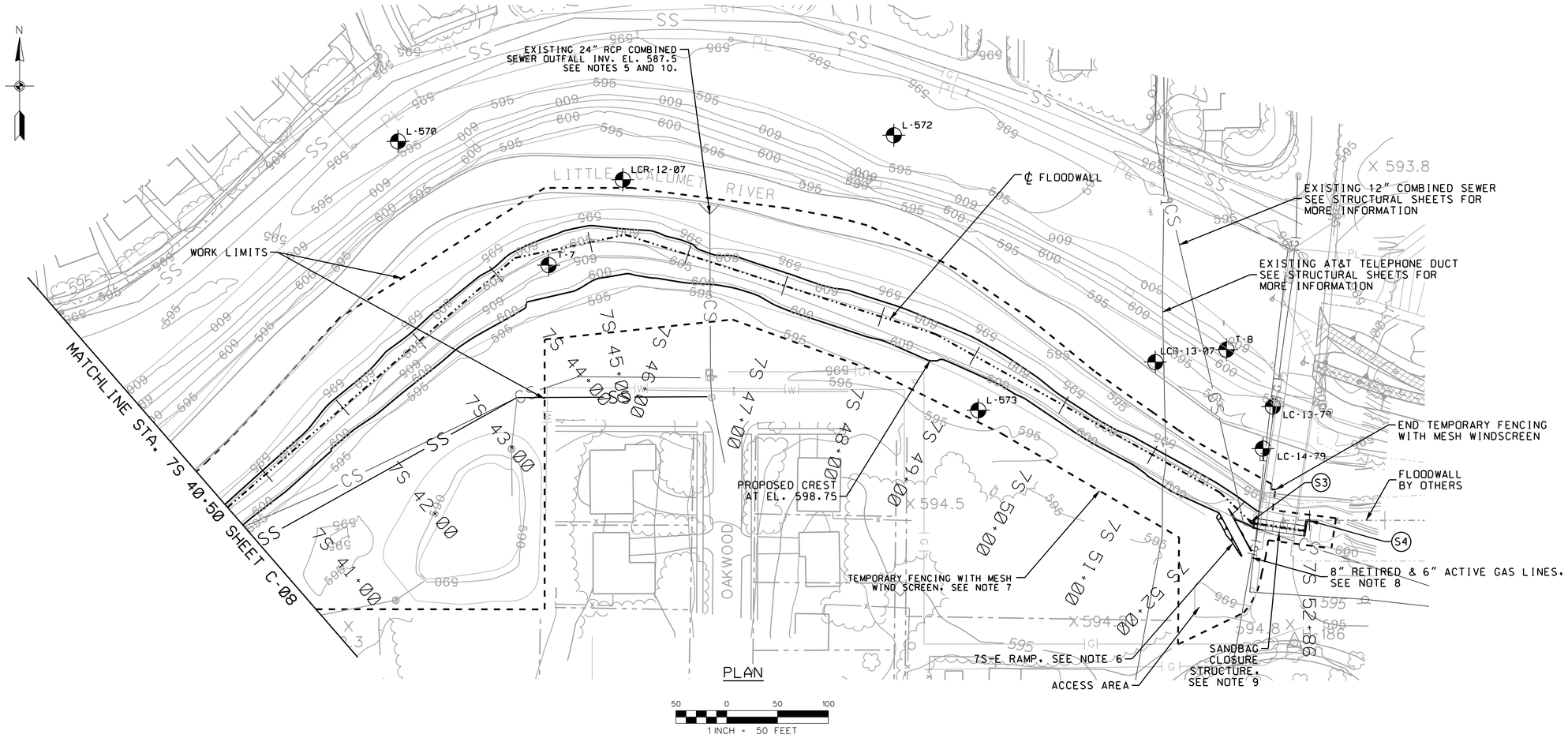

PLAN

1 INCH = 50 FEET

SANDBAG CLOSURE COORDINATES				
POINT NAME	NORTHING	EASTING	STATION	DESCRIPTION
S3	1481398.19	389827.38	52+18.77	INTERSECTION OF ℄ AND WEST EDGE CLOSURE WALL
S4	1481399.38	389885.26	52+85.77	INTERSECTION OF ℄ AND EAST EDGE CLOSURE WALL

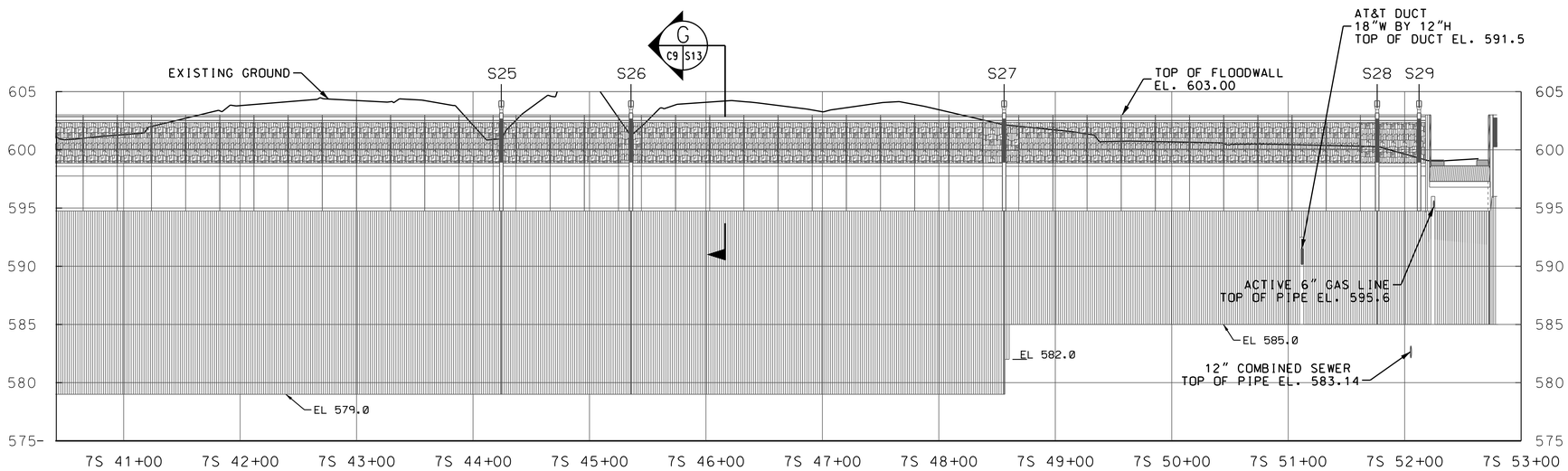

PROFILE 10 VERTICAL TO 1 HORIZONTAL

NOTES:

1. FLOODWALL CONTROL POINTS ARE LISTED ON WORK LIMITS SHEET C-02.
2. FOR SYMBOLS, ABBREVIATIONS, AND GENERAL NOTES SEE SHEET G-03.
3. FOR FLOODWALL SECTIONS SEE SHEET S-12, S-13 AND S-14.
4. FOR CROSS SECTIONS SEE SHEETS C-19 AND C-20.
5. THE CONTRACTOR SHALL REMOVE THE EXISTING PIPE AND OUTFALL FROM THE RIVER TO A POINT LANDSIDE 5 FT FROM THE CENTERLINE OF THE PROPOSED FLOODWALL. THE REMAINING PIPE SHALL BE PLUGGED BY FILLING WITH CONCRETE TO A HORIZONTAL DISTANCE FROM THE END OF THE PIPE EQUAL TO ONE TO TWO TIMES THE DIAMETER OF THE PIPE. THE CONTRACTOR SHALL SUPPLY AND INSTALL TEMPORARY AND/OR PERMANENT BULKHEADS AS NECESSARY TO RETAIN THE CONCRETE WITHIN THE PIPE UNTIL IT SETS. THE CONTRACTOR SHALL ENSURE THAT CONCRETE DOES NOT FLOW INTO THE ACTIVE SEWER LINE. THE CONCRETE SHALL COMPLETELY FILL THE COMPLETE INTERIOR OF THE PIPE FOR THE ABOVE SPECIFIED HORIZONTAL DISTANCE.
6. FOR 7S-E RAMP ALIGNMENT AND DETAILS SEE SHEET C-29.
7. THE TEMPORARY FENCING WITH MESH WINDSCREEN SHALL FOLLOW THE PROJECT WORK LIMITS ON THE LANDSIDE OF THE PROJECT.
8. THE RETIRED 8" NAUTRAL GAS LINE, IN THE VICINITY OF THE 6" ACTIVE NATURAL GAS LINE, SHALL BE EXPOSED DURING CONSTRUCTION OF THE SHEET PILE WALL. THE CONTRACTOR WILL COORDINATE REMOVAL OF A SECTION OF THE 8" GAS LINE AT BOTH LINES OF PROTECTION (NORTH AND SOUTH) WITH THE UTILITY COMPANY (NIPSCO) IN ORDER TO COMPLETE CONSTRUCTION OF THE FLOODWALL.
9. FOR SANDBAG CLOSURE STRUCTURE DETAILS SEE SHEET S-09A.
10. THE EXCAVATION FROM THE REMOVAL OF THE EXISTING PIPES AND OUTFALLS SHALL BE BACKFILLED WITH SATISFACTORY MATERIAL AND COMPACTED ACCORDING TO THE SPECIFICATIONS. IN AREAS WHERE THE EXCAVATION IS DEEPER THAN THE TIP OF THE SHEETPILE WALL AND COHESIONLESS MATERIAL IS PRESENT, THE EXCAVATION SHALL BE BACKFILLED WITH IMPERVIOUS MATERIAL TO 1 FT ABOVE THE SHEETPILE TIP AND COMPACTED ACCORDING TO THE SPECIFICATIONS.

US Army Corps of Engineers
Chicago District

SYMBOL	AMENDMENT DESCRIPTION	DATE APPROVED	SYMBOL	DESCRIPTION	DATE APPROVED

DESIGNED BY: MWC
DATE: FEBRUARY 2009
DRAWN BY: JW/DB
SCALE: AS SHOWN
CHECKED BY: JAG
SOLICITATION NUMBER: W912P6-09-B-0002
SUBMITTED BY: JOHN A. GROBOSKI, P.E.
DATE: 7/31/08

U.S. ARMY ENGINEER DISTRICT
CORPS OF ENGINEERS
CHICAGO, ILLINOIS

LITTLE CALUMET RIVER, INDIANA
LOCAL FLOOD PROTECTION
STAGE VII - FLOODWALL

PLAN AND PROFILE
STA. 7S 40+50 TO 7S 52+86

SHEET REFERENCE NUMBER:
C-09
SHEET 18 OF 79

PLOT DATE: 2/17/2009
FILENAME: C:\Documents and Settings\bldscmc9\My Documents\PW_Working_Directory_MC\dms17077\LCS7_C-09.dgn

LCS7_C-09.dgn 2/17/2009 11:31:42 AM

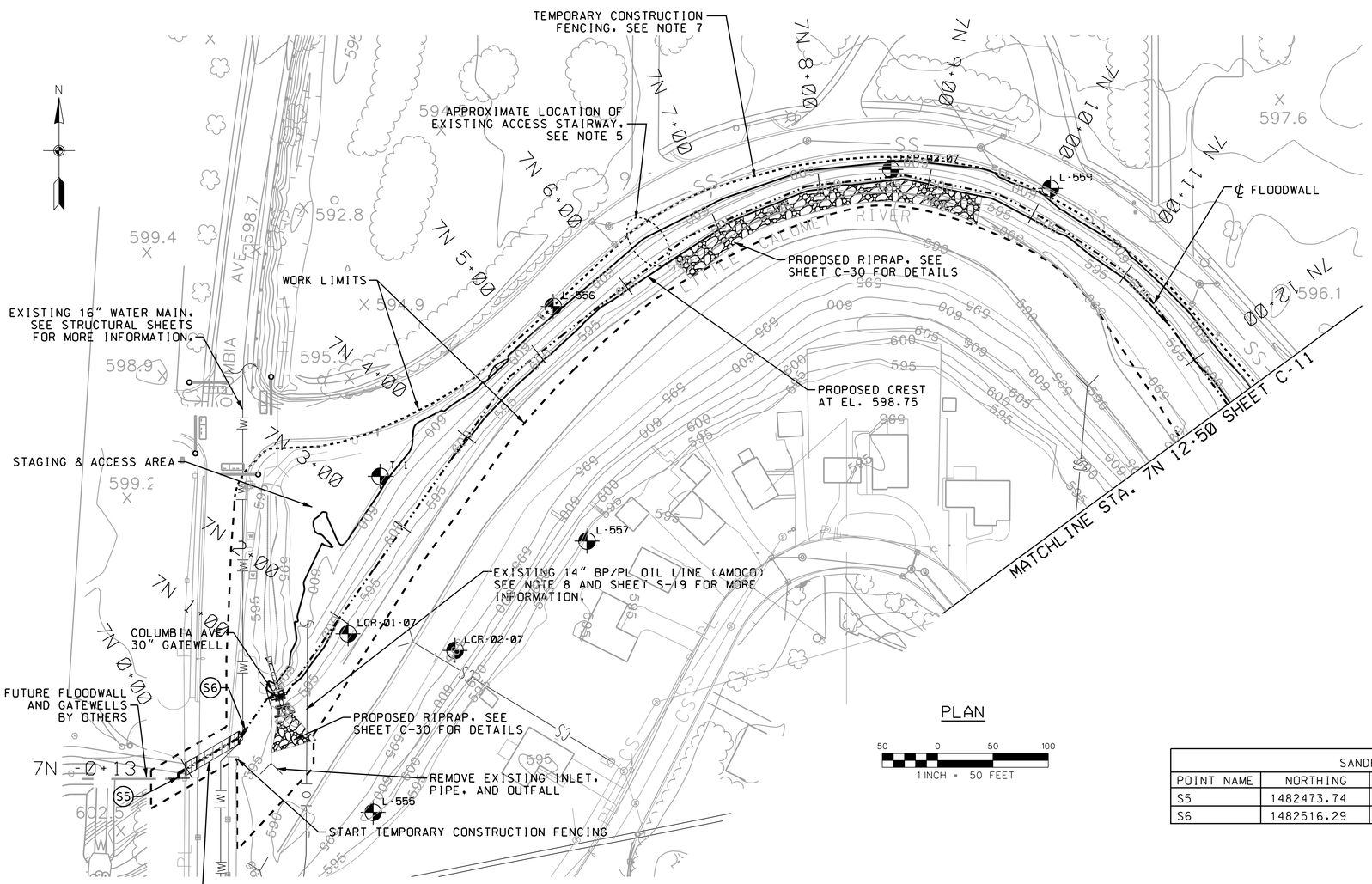

PLAN

1 INCH = 50 FEET

NOTES:

1. FLOODWALL CONTROL POINTS ARE LISTED ON WORK LIMITS SHEET C-03.
2. FOR SYMBOLS, ABBREVIATIONS, AND GENERAL NOTES SEE SHEET G-03.
3. FOR FLOODWALL SECTIONS SEE SHEET S-12, S-13 AND S-14.
4. FOR CROSS SECTIONS SEE SHEETS C-21 AND C-22.
5. TIMBER CURBS, WOOD CHIP SURFACES, ACCESS RAMPS AND STAIRS SHALL BE REMOVED ALONG WITH THE EXISTING PATH.
6. FOR SANDBAG CLOSURE STRUCTURE DETAILS SEE SHEET S-10.
7. THE TEMPORARY CONSTRUCTION FENCING SHALL FOLLOW THE PROJECT WORK LIMITS ON THE LANDSIDE OF THE PROJECT.
8. THE EXISTING UNDERGROUND BP OIL LINES WITHIN THE WORK LIMITS SHALL BE PROTECTED WITH TIMBER MATS AND SHALL NOT BE REMOVED UNTIL 2 WEEKS BEFORE SEEDING OPERATIONS IN THE AREA OF THE UNDERGROUND OIL LINES.

SANDBAG CLOSURE COORDINATES

POINT NAME	NORTHING	EASTING	STATION	DESCRIPTION
S5	1482473.74	385905.75	-0+11.66	INTERSECTION OF ℄ AND WEST EDGE CLOSURE WALL
S6	1482516.29	385965.98	0+64.08	INTERSECTION OF ℄ AND EAST EDGE CLOSURE WALL

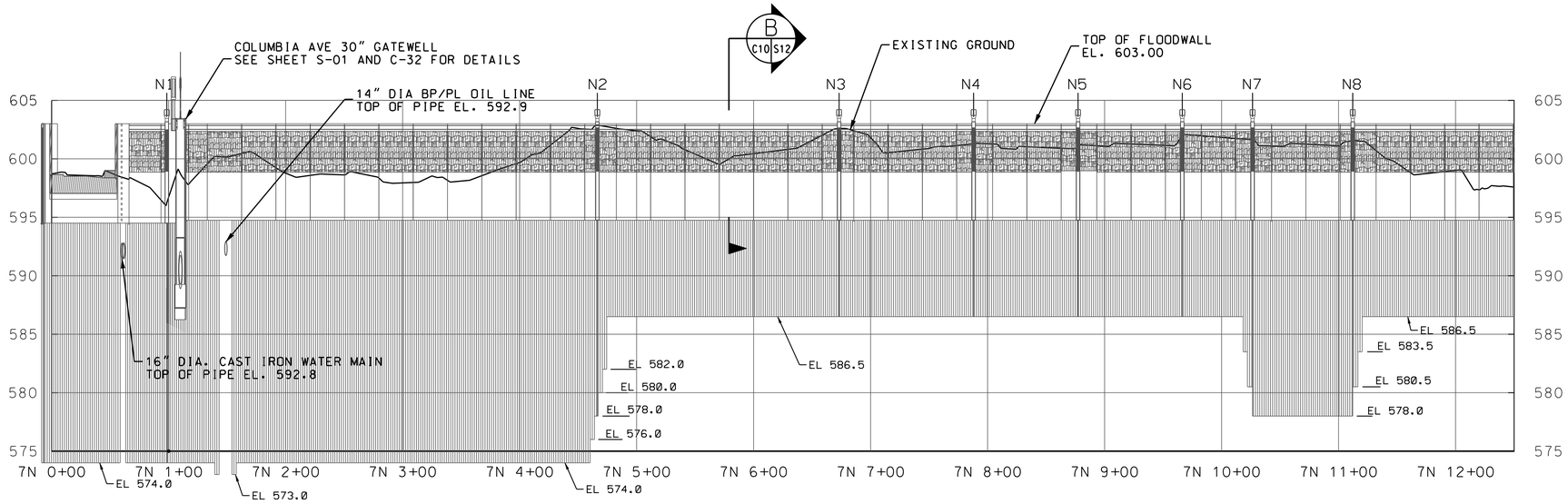

PROFILE 10 VERTICAL TO 1 HORIZONTAL

US Army Corps of Engineers Chicago District

SYMBOL	AMENDMENT DESCRIPTION	DATE APPROVED	SYMBOL	DESCRIPTION	DATE APPROVED

DESIGNED BY: MWC
DATE: FEBRUARY 2009
DRAWN BY: JW/DB
SCALE: AS SHOWN
CHECKED BY: JAG
SOLICITATION NUMBER: W912P6-09-B-0002
SUBMITTED BY: JOHN A. GROBOSKI, P.E.
DATE: 7/31/08

U.S. ARMY ENGINEER DISTRICT
CORPS OF ENGINEERS
CHICAGO, ILLINOIS

LITTLE CALUMET RIVER, INDIANA
LOCAL FLOOD PROTECTION
STAGE VII - FLOODWALL

PLAN AND PROFILE
STA. 7N 0+00 TO 7N 12+50

SHEET REFERENCE NUMBER:
C-10
SHEET 19 OF 79

PLOT DATE: 2/17/2009
FILENAME: C:\Documents and Settings\h16ecmc3\My Documents\PW_Working_Directory_MC\dms17071\LCS7_C-10.dgn

LCS7_C-10.dgn 2/17/2009 11:36:51 AM

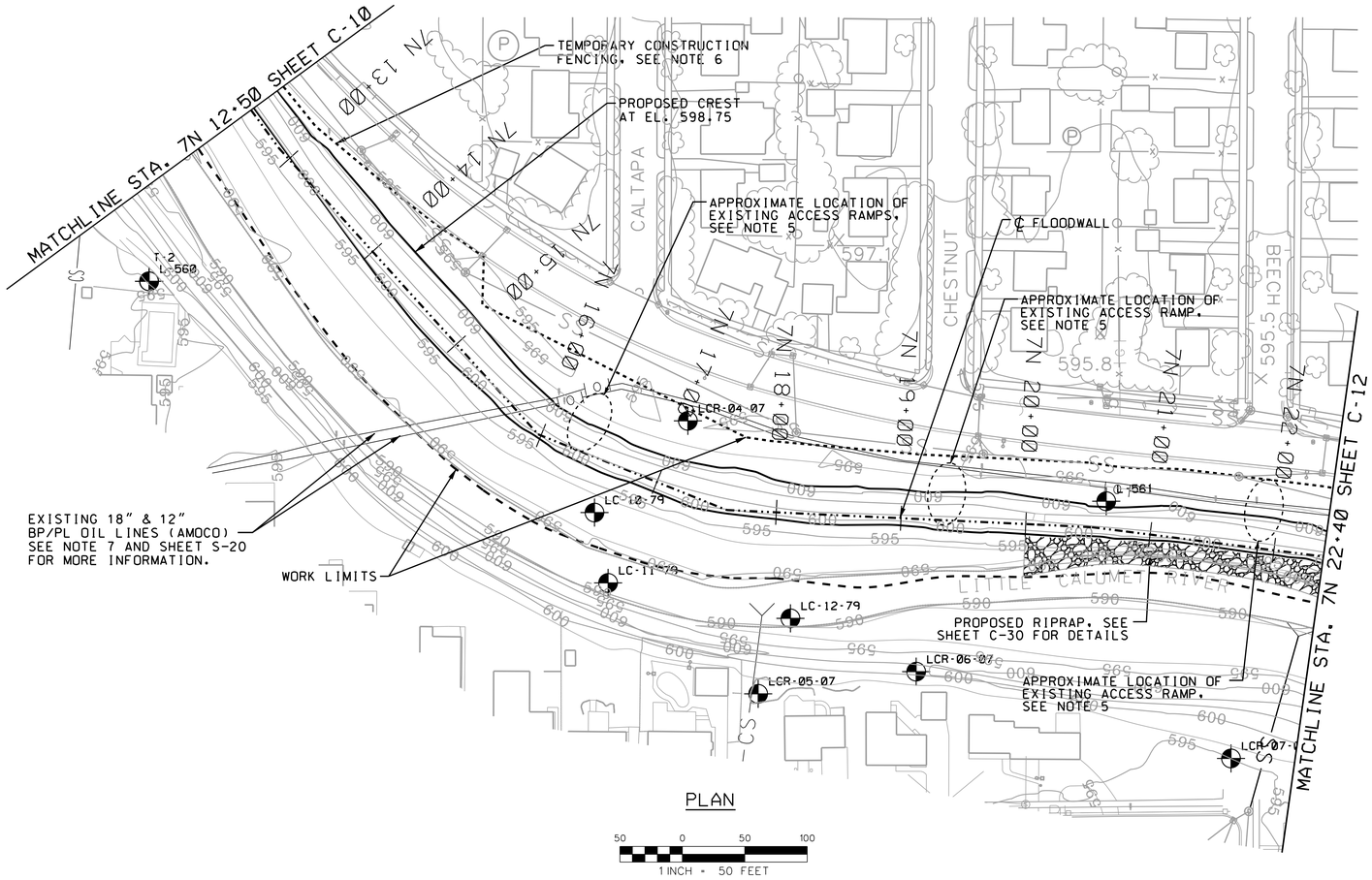

PLAN

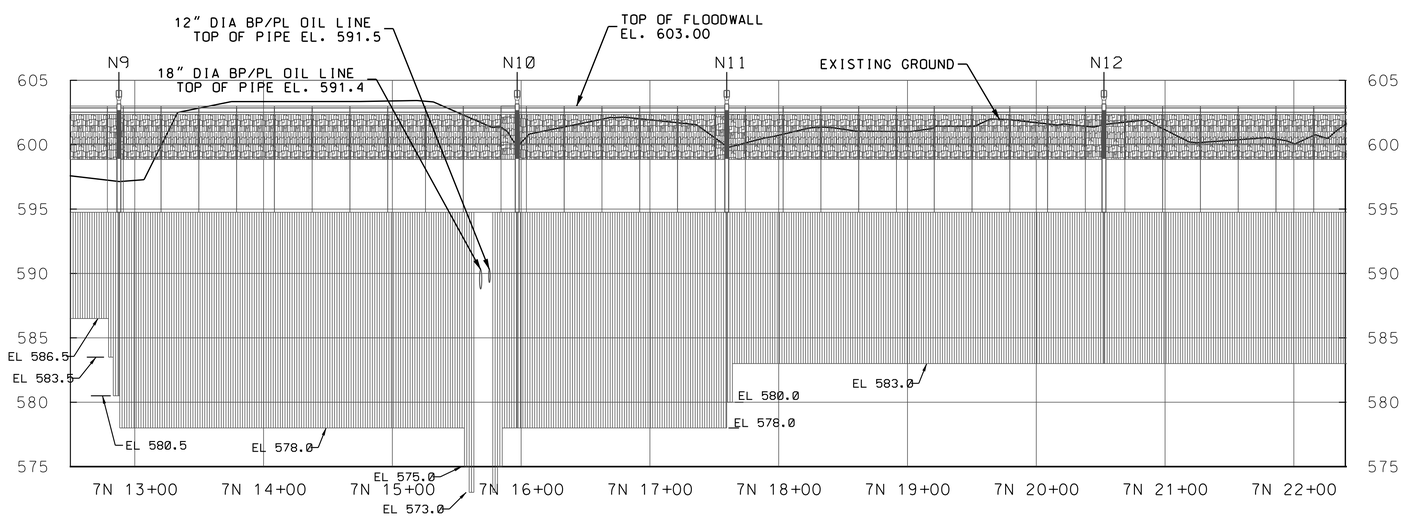

PROFILE 10 VERTICAL TO 1 HORIZONTAL

NOTES:

1. FLOODWALL CONTROL POINTS ARE LISTED ON WORK LIMITS SHEET C-03.
2. FOR SYMBOLS, ABBREVIATIONS, AND GENERAL NOTES SEE SHEET G-03.
3. FOR FLOODWALL SECTIONS SEE SHEET S-12, S-13 AND S-14.
4. FOR CROSS SECTIONS SEE SHEETS C-22 AND C-23.
5. TIMBER CURBS, WOOD CHIP SURFACES, ACCESS RAMPS AND STAIRS SHALL BE REMOVED ALONG WITH THE EXISTING PATH.
6. THE TEMPORARY CONSTRUCTION FENCING SHALL FOLLOW THE PROJECT WORK LIMITS ON THE LANDSIDE OF THE PROJECT.
7. THE EXISTING UNDERGROUND BP OIL LINES WITHIN THE WORK LIMITS SHALL BE PROTECTED WITH TIMBER MATS AND SHALL NOT BE REMOVED UNTIL 2 WEEKS BEFORE SEEDING OPERATIONS IN THE AREA OF THE UNDERGROUND OIL LINES.

US Army Corps of Engineers
Chicago District

SYMBOL	AMENDMENT DESCRIPTION	DATE APPROVED	SYMBOL	DESCRIPTION	DATE APPROVED

DESIGNED BY: MWC
DATE: FEBRUARY 2009
DRAWN BY: JW/DB
SCALE: AS SHOWN
CHECKED BY: JAG
SOLICITATION NUMBER: W912P6-09-B-0002
JOHN A. GROBOSKI, P.E.
SUBMITTED BY:
DATE: 7/31/08

U.S. ARMY ENGINEER DISTRICT
CORPS OF ENGINEERS
CHICAGO, ILLINOIS

LITTLE CALUMET RIVER, INDIANA
LOCAL FLOOD PROTECTION
STAGE VII - FLOODWALL

PLAN AND PROFILE
STA. 7N 12+50 TO 7N 22+40

SHEET REFERENCE NUMBER:
C-11
SHEET 20 OF 79

PLOT DATE: 2/17/2009
FILENAME: C:\Documents and Settings\bdlacmc3\My Documents\PW_Working_Directory_MC\dms17677\LCS7_C-11.dgn

LCS7_C-11.dgn 2/17/2009 11:38:32 AM

NOTES:

1. FLOODWALL CONTROL POINTS ARE LISTED ON WORK LIMITS SHEETS C-03 AND C-04.
2. FOR SYMBOLS, ABBREVIATIONS, AND GENERAL NOTES SEE SHEET G-03.
3. FOR FLOODWALL SECTIONS SEE SHEET S-12, S-13 AND S-14.
4. FOR CROSS SECTIONS SEE SHEETS C-23 AND C-24.
5. TIMBER CURBS, WOOD CHIP SURFACES, ACCESS RAMPS AND STAIRS SHALL BE REMOVED ALONG WITH THE EXISTING PATH.
6. ANY EXISTING FENCE REMOVED FROM AROUND THE PUMP STATION SHALL BE REPLACED WITH NEW FENCING BY THE CONTRACTOR AT THE COMPLETION OF THE PROJECT.
7. THE TEMPORARY CONSTRUCTION FENCING SHALL FOLLOW THE PROJECT WORK LIMITS ON THE LANDSIDE OF THE PROJECT.
8. THE EXISTING UNDERGROUND BP OIL LINES WITHIN THE WORK LIMITS SHALL BE PROTECTED WITH TIMBER MATS AND SHALL NOT BE REMOVED UNTIL 2 WEEKS BEFORE SEEDING OPERATIONS IN THE AREA OF THE UNDERGROUND OIL LINES.
9. THE CONTRACTOR SHALL MINIMIZE GRADING OF THE EXISTING BERM AROUND THE WALNUT ST. PUMP STATION FROM STA. 7N 24+13 TO STA. 7N 26+10. GRADING SHALL BE LIMITED TO ONLY WHAT IS NECESSARY TO BUILD THE RECREATION TRAIL.

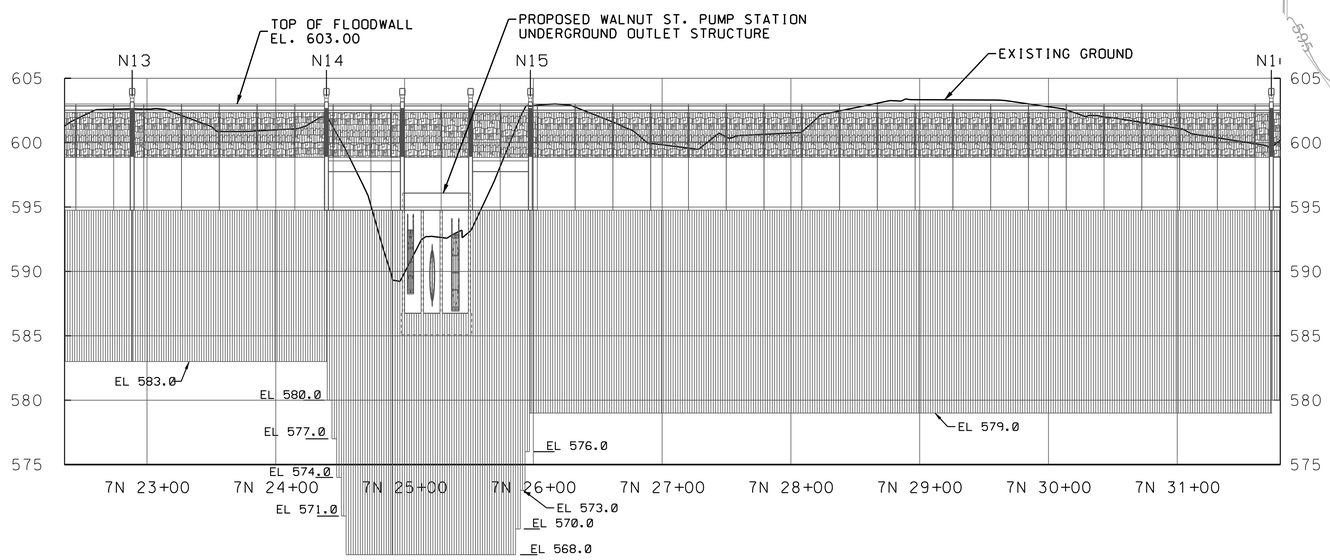

PROFILE 10 VERTICAL TO 1 HORIZONTAL

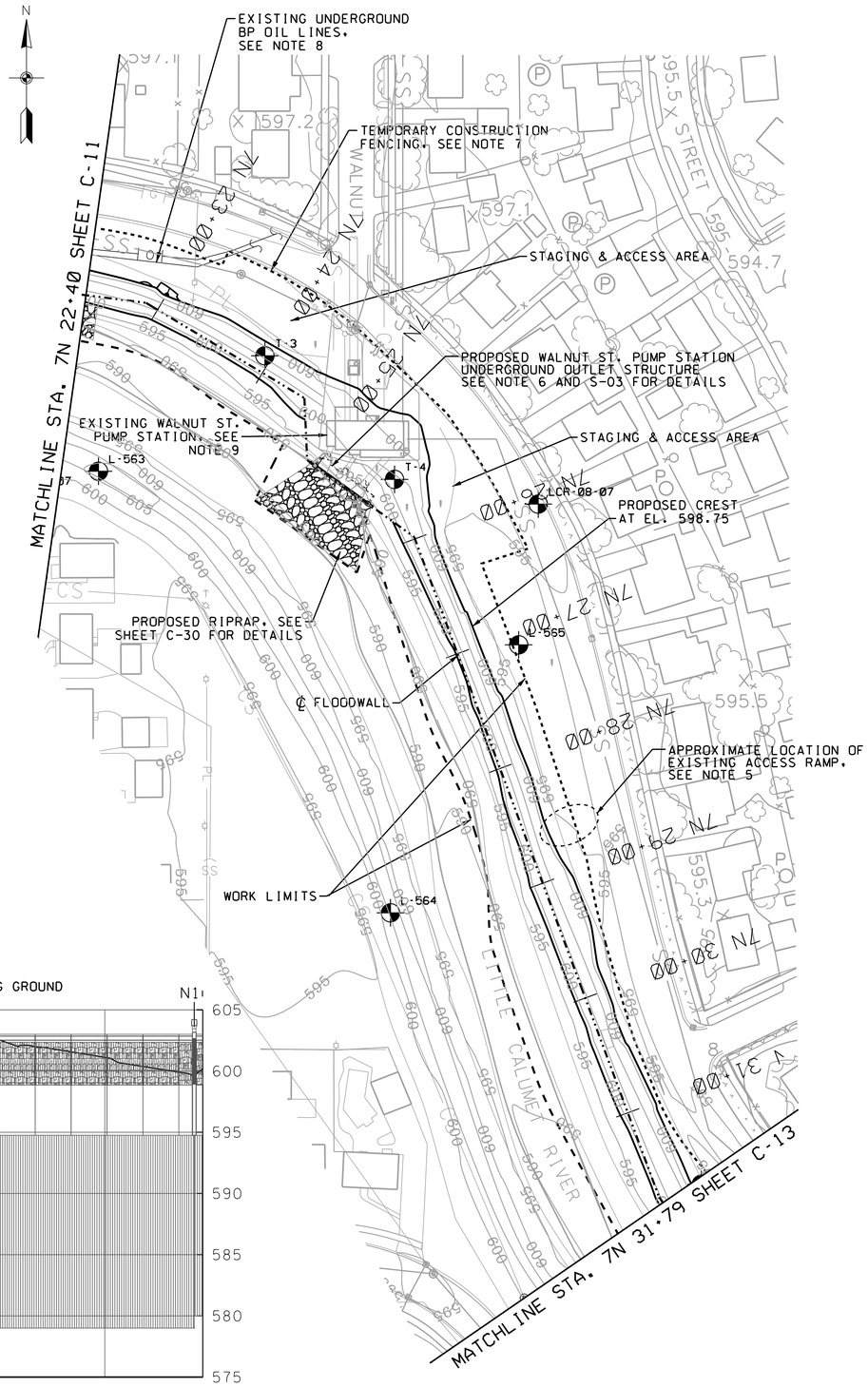

PLAN

50 0 50 100
1 INCH = 50 FEET

US Army Corps of Engineers
Chicago District

SYMBOL	AMENDMENT DESCRIPTION	DATE APPROVED	SYMBOL	DESCRIPTION	DATE APPROVED

DESIGNED BY: MWC
DATE: FEBRUARY 2009
DRAWN BY: JW/DB
SCALE: AS SHOWN
CHECKED BY: JAG
SOLICITATION NUMBER: W912P6-09-B-0002
SUBMITTED BY: JOHN A. GROBOSKI, P.E.
DATE: 7/31/08

U.S. ARMY ENGINEER DISTRICT
CORPS OF ENGINEERS
CHICAGO, ILLINOIS

LITTLE CALUMET RIVER, INDIANA
LOCAL FLOOD PROTECTION
STAGE VII - FLOODWALL

PLAN AND PROFILE
STA. 7N 22+40 TO 7N 31+79

SHEET REFERENCE NUMBER:
C-12

PLOT DATE: 2/17/2009
FILENAME: C:\Documents and Settings\16lecmc3\My Documents\PW_Working_Directory_MC\dms17071\LCS7_C-12.dgn

LCS7_C-12.dgn 2/17/2009 11:40:54 AM

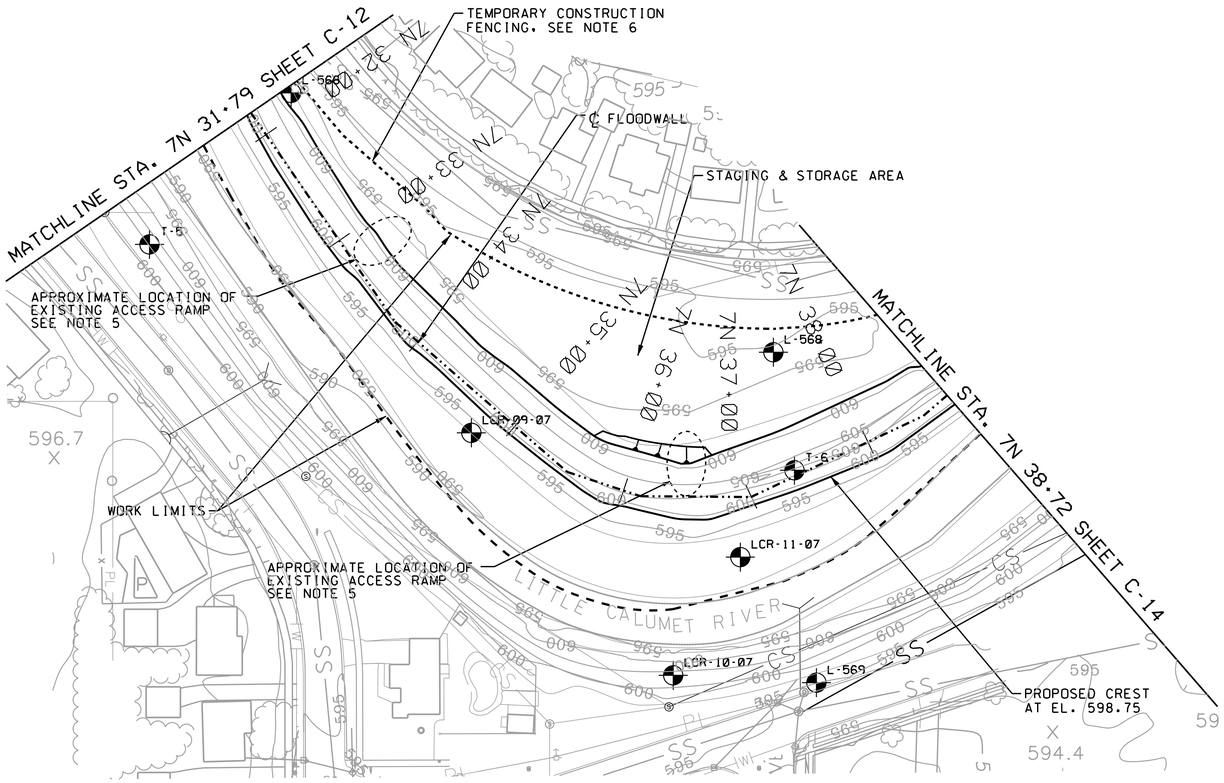

PLAN

50 0 50 100

1 INCH = 50 FEET

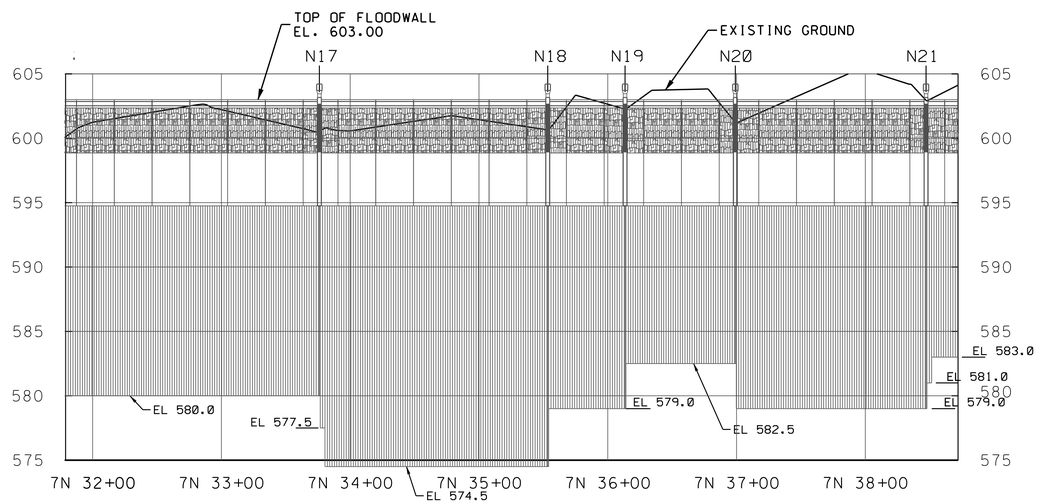

PROFILE 10 VERTICAL TO 1 HORIZONTAL

NOTES:

1. FLOODWALL CONTROL POINTS ARE LISTED ON WORK LIMITS SHEET C-04.
2. FOR SYMBOLS, ABBREVIATIONS, AND GENERAL NOTES SEE SHEET G-03.
3. FOR FLOODWALL SECTIONS SEE SHEET S-12, S-13 AND S-14.
4. FOR CROSS SECTIONS SEE SHEET C-24.
5. TIMBER CURBS, WOOD CHIP SURFACES, ACCESS RAMPS AND STAIRS SHALL BE REMOVED ALONG WITH THE EXISTING PATH.
6. THE TEMPORARY CONSTRUCTION FENCING SHALL FOLLOW THE PROJECT WORK LIMITS ON THE LANDSIDE OF THE PROJECT.

US Army Corps of Engineers
Chicago District

SYMBOL	AMENDMENT DESCRIPTION	DATE APPROVED	SYMBOL	DESCRIPTION	DATE APPROVED

DESIGNED BY: MWC
DATE: FEBRUARY 2009
DRAWN BY: JW/DB
SCALE: AS SHOWN
CHECKED BY: JAG
SOLICITATION NUMBER: W912P6-09-B-0002
SUBMITTED BY: JOHN A. GROBOSKI, P.E.
DATE: 7/31/08

U.S. ARMY ENGINEER DISTRICT
CORPS OF ENGINEERS
CHICAGO, ILLINOIS

LITTLE CALUMET RIVER, INDIANA
LOCAL FLOOD PROTECTION
STAGE VII - FLOODWALL

PLAN AND PROFILE
STA. 7N 31+79 TO 7N 38+72

SHEET REFERENCE NUMBER:
C-13

PLOT DATE: 2/17/2009
FILENAME: C:\Documents and Settings\16lecmc3\My Documents\PW_Working_Directory_MC\dms17071\LCS7_C-13.dgn

LCS7_C-13.dgn 2/17/2009 11:42:49 AM

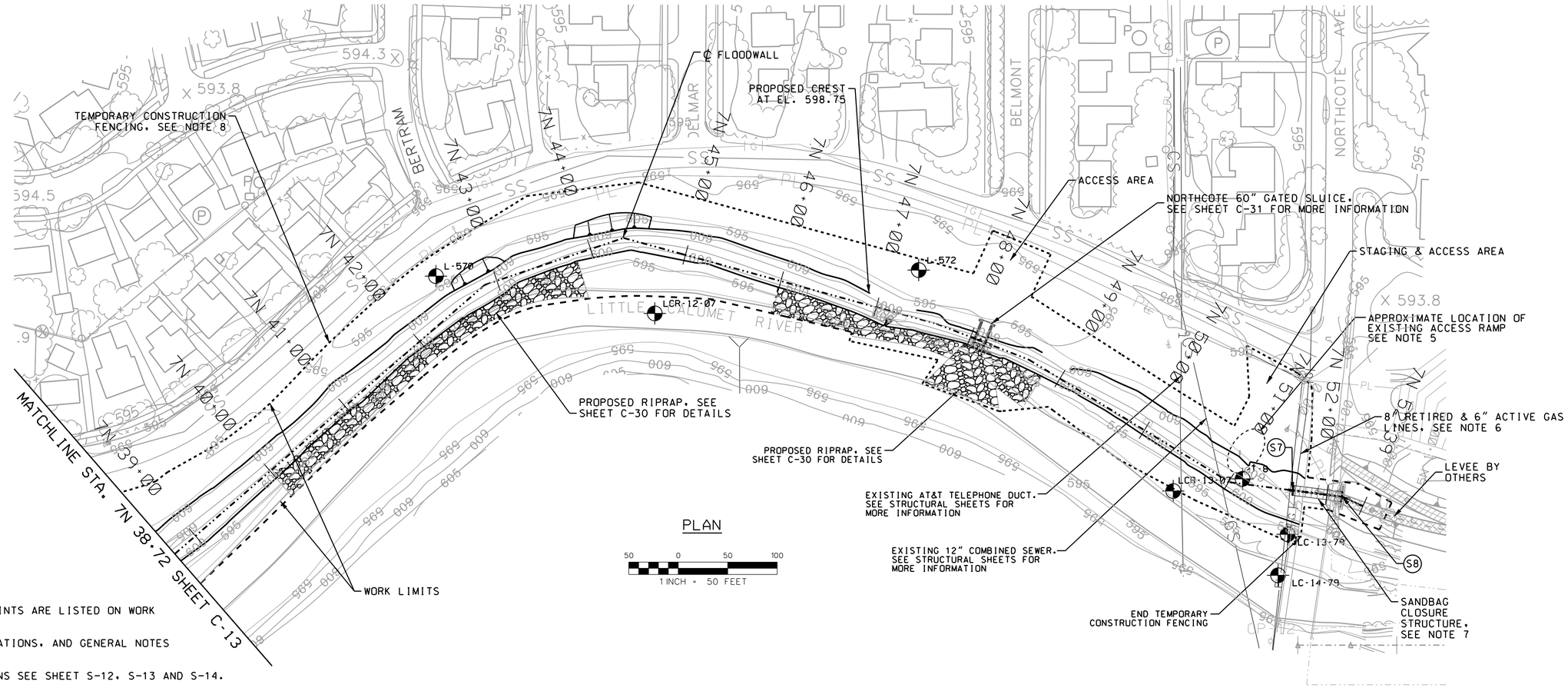

NOTES:

1. FLOODWALL CONTROL POINTS ARE LISTED ON WORK LIMITS SHEETS C-04.
2. FOR SYMBOLS, ABBREVIATIONS, AND GENERAL NOTES SEE SHEET G-03.
3. FOR FLOODWALL SECTIONS SEE SHEET S-12, S-13 AND S-14.
4. FOR CROSS SECTIONS SEE SHEETS C-24, C-25 AND C-26.
5. TIMBER CURBS, WOOD CHIP SURFACES, ACCESS RAMPS AND STAIRS SHALL BE REMOVED ALONG WITH THE EXISTING PATH.
6. THE RETIRED 8" NAUTRAL GAS LINE, IN THE VICINITY OF THE 6" ACTIVE NATURAL GAS LINE, SHALL BE EXPOSED DURING CONSTRUCTION OF THE SHEET PILE WALL. THE CONTRACTOR WILL COORDINATE REMOVAL OF A SECTION OF THE 8" GAS LINE AT BOTH LINES OF PROTECTION (NORTH AND SOUTH) WITH THE UTILITY COMPANY (NIPSCO) IN ORDER TO COMPLETE CONSTRUCTION OF THE FLOODWALL.
7. FOR SANDBAG CLOSURE STRUCTURE DETAILS SEE SHEET S-09.
8. THE TEMPORARY CONSTRUCTION FENCING SHALL FOLLOW THE PROJECT WORK LIMITS ON THE LANDSIDE OF THE PROJECT.

SANDBAG CLOSURE COORDINATES

POINT NAME	NORTHING	EASTING	STATION	DESCRIPTION
S7	1481556.06	389854.03	51+65.06	INTERSECTION OF ℄ AND WEST EDGE CLOSURE WALL
S8	1481549.57	389904.43	52+15.88	INTERSECTION OF ℄ AND EAST EDGE CLOSURE WALL

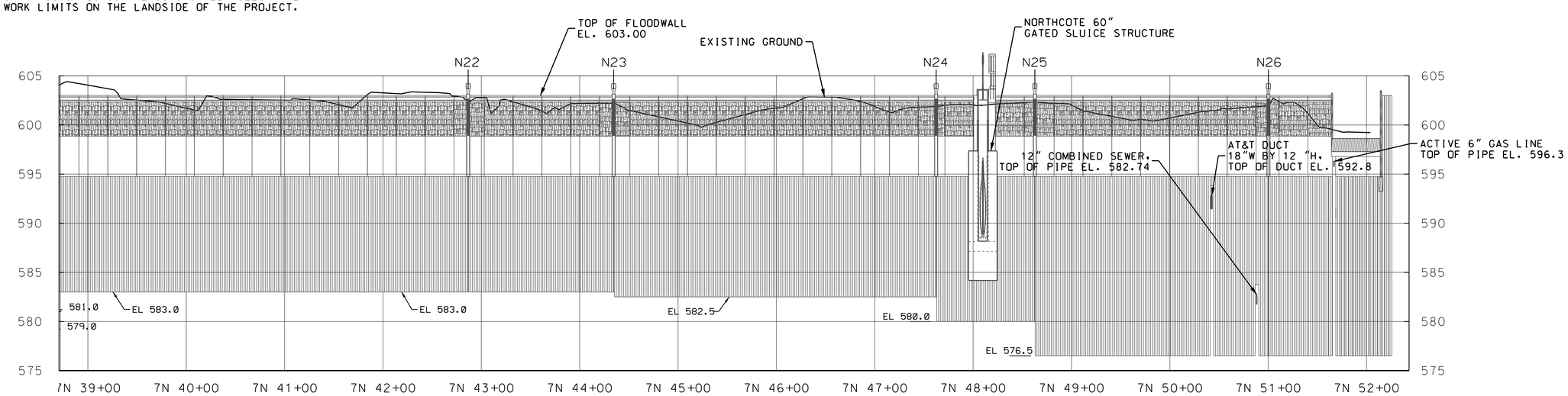

PROFILE 10 VERTICAL TO 1 HORIZONTAL

US Army Corps of Engineers Chicago District

SYMBOL	AMENDMENT DESCRIPTION	DATE	APPROVED	SYMBOL	DESCRIPTION	DATE	APPROVED

U.S. ARMY ENGINEER DISTRICT
CORPS OF ENGINEERS
CHICAGO, ILLINOIS

DESIGNED BY: MWC | DATE: FEBRUARY 2009
DRAWN BY: JW/DB | SCALE: AS SHOWN
CHECKED BY: JAG | SOLICITATION NUMBER: W912P6-09-B-0002
JOHN A. GROBOSKI, P.E. 7/31/08
SUBMITTED BY: | DATE:

LITTLE CALUMET RIVER, INDIANA
LOCAL FLOOD PROTECTION
STAGE VII - FLOODWALL

PLAN AND PROFILE
STA. 7N 38+72 TO 7N 52+39

SHEET REFERENCE NUMBER:
C-14
SHEET 23 OF 79

PLOT DATE: 2/17/2009
FILENAME: C:\Documents and Settings\h6tecmc9\My Documents\PW_Working_Directory_MC\dms17071\LCS7_C-14.dgn

LCS7_C-14.dgn 2/17/2009 11:44:41 AM

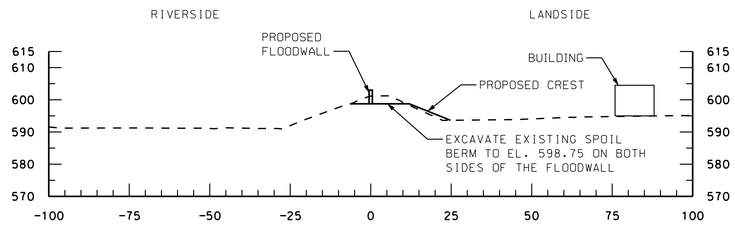

7S 4+00

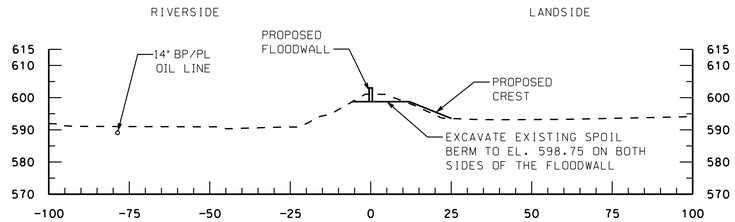

7S 3+00

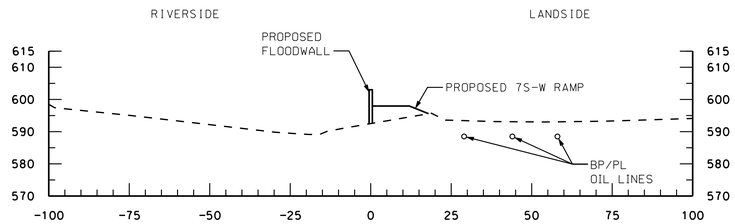

7S 2+00

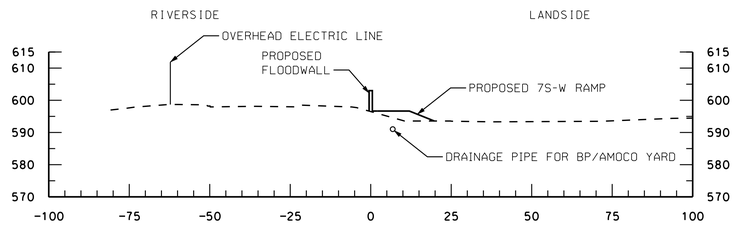

7S 1+00

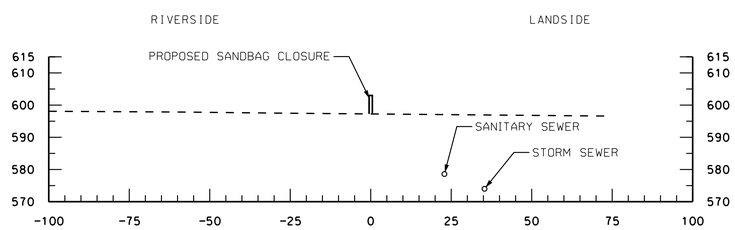

7S 0+00

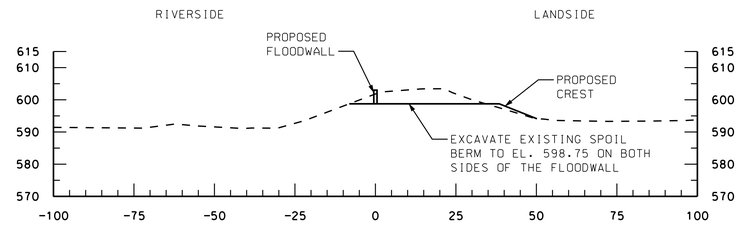

7S 9+00

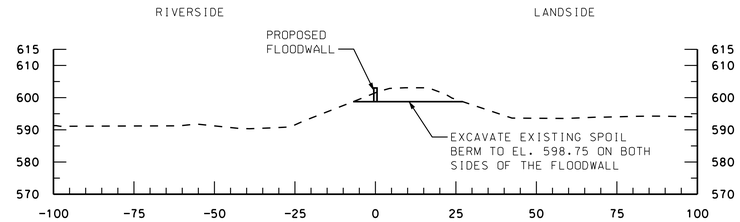

7S 8+00

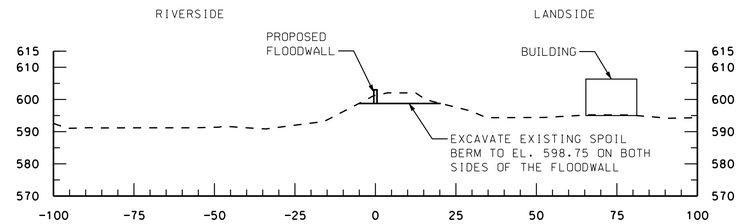

7S 7+00

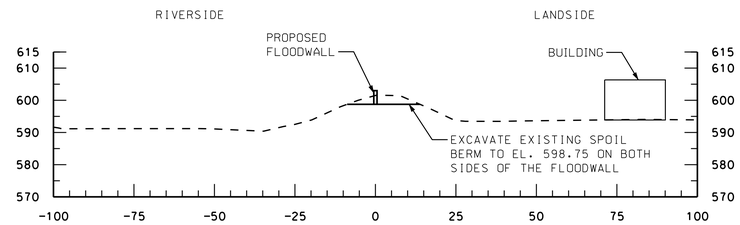

7S 6+00

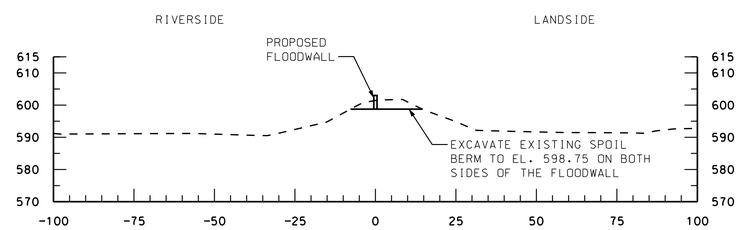

7S 5+00

NOTES:

1. FOR CONTROL POINTS AND WORKLIMITS SEE SHEET C-01.
2. FOR PLAN AND PROFILE SEE SHEET C-05.
3. FOR FLOODWALL SECTIONS SEE SHEETS S-12, S-13, AND S-14.
4. HYDROGRAPHIC SURVEY NOT TAKEN AT WATERWAYS.
   WATER SURFACE IS SHOWN AT TIME OF SURVEY.

20' 10' 0 20'

SCALE: 1'' = 20'-0"

US Army Corps of Engineers
Chicago District

SYMBOL	AMENDMENT DESCRIPTION	DATE APPROVED	SYMBOL	DESCRIPTION	DATE APPROVED

DESIGNED BY: MWC
DATE: FEBRUARY 2009
DRAWN BY: JW/DB
SCALE: AS SHOWN
CHECKED BY: JAG
SOLICITATION NUMBER: W912P6-09-B-0002
SUBMITTED BY: JOHN A. GROBOSKI, P.E.
DATE: 7/31/08

U.S. ARMY ENGINEER DISTRICT
CORPS OF ENGINEERS
CHICAGO, ILLINOIS

LITTLE CALUMET RIVER, INDIANA
LOCAL FLOOD PROTECTION
STAGE VII - FLOODWALL

CROSS SECTION
STA. 7S 0+00 TO 7S 9+00

SHEET REFERENCE NUMBER:
C-15

PLOT DATE: 2/17/2009
FILENAME: C:\Documents and Settings\bdlacmc3\My Documents\PW_Working_Directory_MC\dms17677\LCS7_C-15.dgn

LCS7_C-15.dgn 2/17/2009 10:39:45 AM

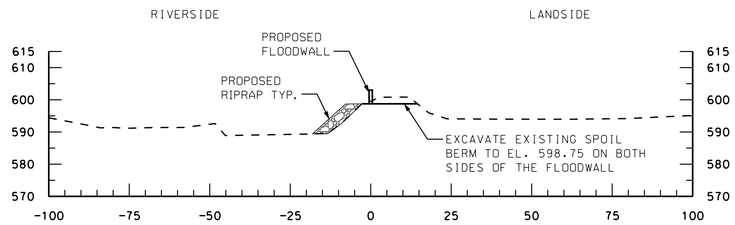

7S 14+00

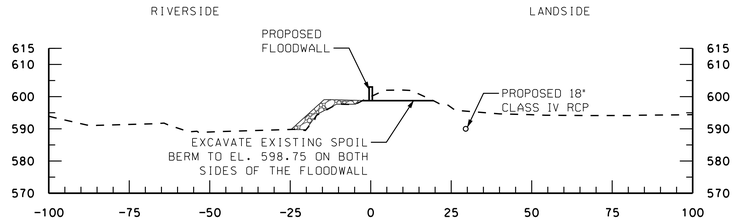

7S 13+00

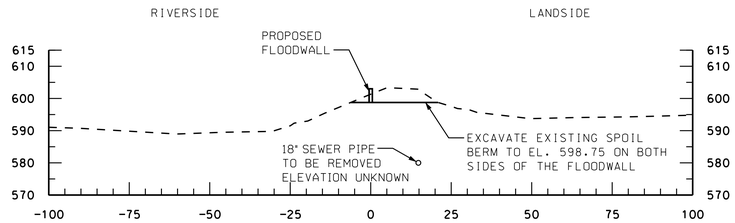

7S 12+00

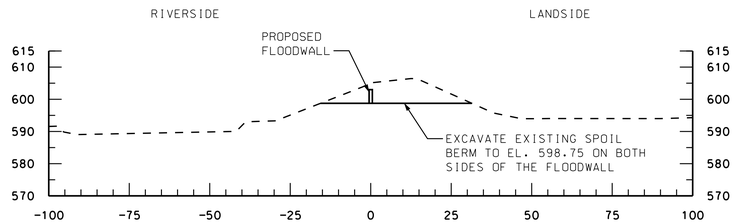

7S 11+00

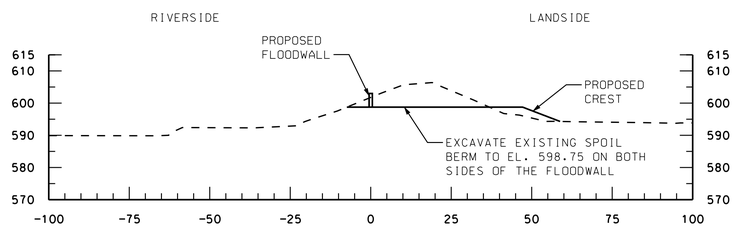

7S 10+00

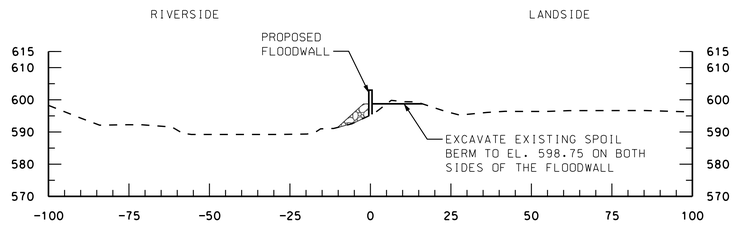

7S 19+00

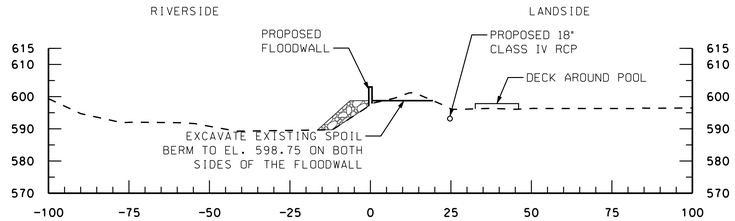

7S 18+00

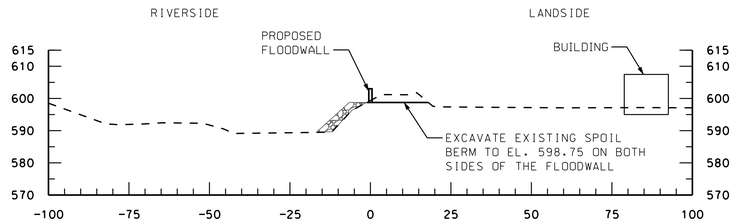

7S 17+00

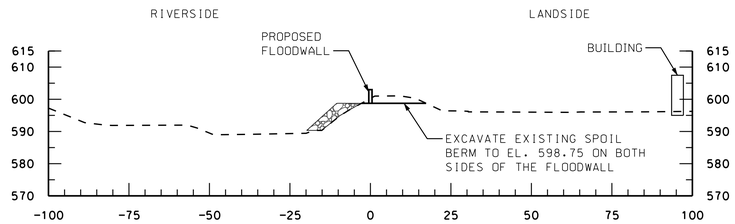

7S 16+00

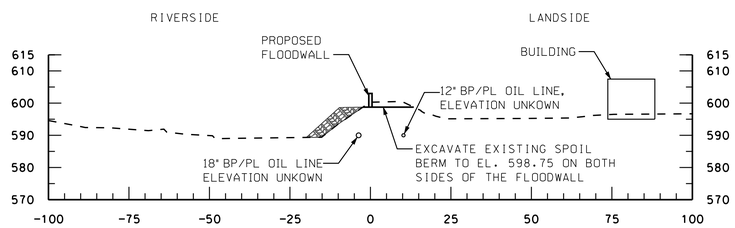

7S 15+00

NOTES:

1. FOR CONTROL POINTS AND WORKLIMITS SEE SHEET C-01.
2. FOR PLAN AND PROFILE SEE SHEETS C-05 AND C-06.
3. FOR FLOODWALL SECTIONS SEE SHEETS S-12, S-13, AND S-14.
4. FOR THE RIPRAP SCHEDULE AND RIPRAP PLACEMENT DETAILS SEE SHEET C-30.
5. HYDROGRAPHIC SURVEY NOT TAKEN AT WATERWAYS. WATER SURFACE IS SHOWN AT TIME OF SURVEY.

20' 10' 0 20'

SCALE: 1'' = 20'-0"

US Army Corps of Engineers
Chicago District

SYMBOL	AMENDMENT DESCRIPTION	DATE APPROVED	SYMBOL	DESCRIPTION	DATE APPROVED

DESIGNED BY: MWC | DATE: FEBRUARY 2009
DRAWN BY: JW/DB | SCALE: AS SHOWN
CHECKED BY: JAG | SOLICITATION NUMBER: W912P6-09-B-0002
SUBMITTED BY: JOHN A. GROBOSKI, P.E. | DATE: 7/31/08

U.S. ARMY ENGINEER DISTRICT
CORPS OF ENGINEERS
CHICAGO, ILLINOIS

LITTLE CALUMET RIVER, INDIANA
LOCAL FLOOD PROTECTION
STAGE VII - FLOODWALL

CROSS SECTION
STA. 7S 10+00 TO 7S 19+00

SHEET REFERENCE NUMBER:
C-16
SHEET 25 OF 79

PLOT DATE: 2/13/2009
FILENAME: C:\working\B\sms17071\LCS7_C-16.dgn

LCS7_C-16.dgn 2/13/2009 4:21:00 PM

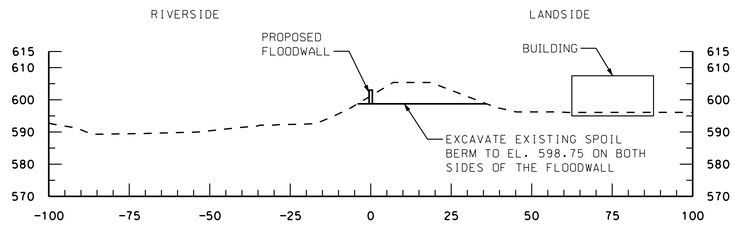

7S 24+00

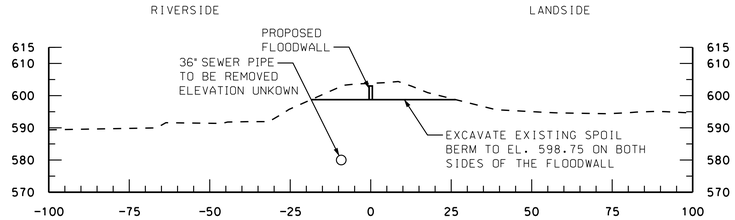

7S 23+00

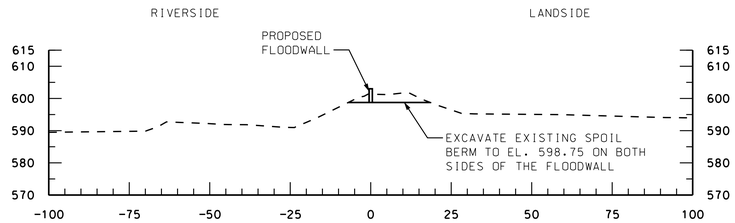

7S 22+00

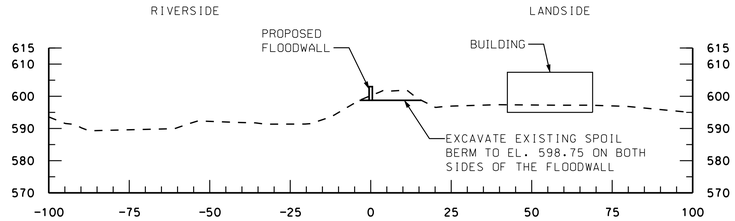

7S 21+00

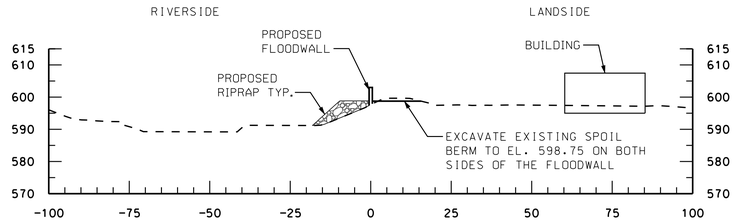

7S 20+00

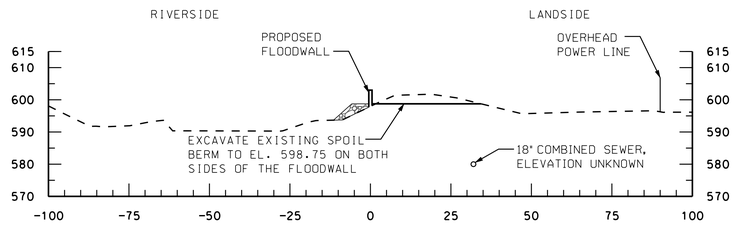

7S 29+00

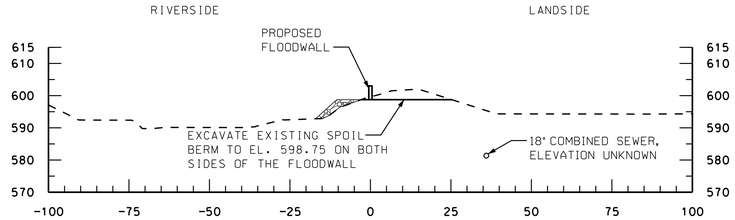

7S 28+00

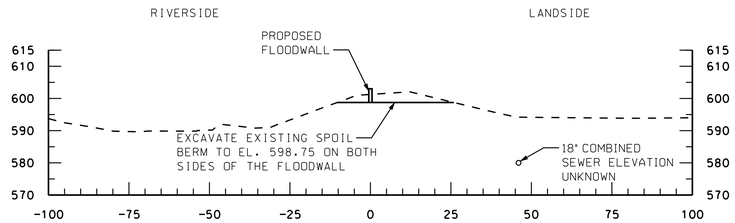

7S 27+00

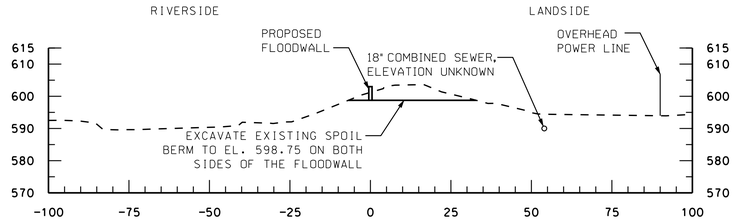

7S 26+00

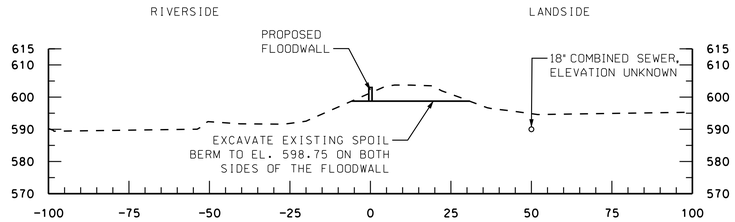

7S 25+00

NOTES:

1. FOR CONTROL POINTS AND WORKLIMITS SEE SHEETS C-01 AND C-02.
2. FOR PLAN AND PROFILE SEE SHEETS C-06 AND C-07.
3. FOR FLOODWALL SECTIONS SEE SHEETS S-12, S-13, AND S-14.
4. FOR THE RIPRAP SCHEDULE AND RIPRAP PLACEMENT DETAILS SEE SHEET C-30.
5. HYDROGRAPHIC SURVEY NOT TAKEN AT WATERWAYS. WATER SURFACE IS SHOWN AT TIME OF SURVEY.

20' 10' 0 20'

SCALE: 1'' = 20'-0"

US Army Corps of Engineers
Chicago District

SYMBOL	AMENDMENT DESCRIPTION	DATE APPROVED	SYMBOL	DESCRIPTION	DATE APPROVED

DESIGNED BY: MWC
DATE: FEBRUARY 2009
DRAWN BY: JW/DB
SCALE: AS SHOWN
CHECKED BY: JAG
SOLICITATION NUMBER: W912P6-09-B-0002
SUBMITTED BY: JOHN A. GROBOSKI, P.E.
DATE: 7/31/08

U.S. ARMY ENGINEER DISTRICT
CORPS OF ENGINEERS
CHICAGO, ILLINOIS

LITTLE CALUMET RIVER, INDIANA
LOCAL FLOOD PROTECTION
STAGE VII - FLOODWALL

CROSS SECTION
STA. 7S 20+00 TO 7S 29+00

SHEET REFERENCE NUMBER:
C-17
SHEET 26 OF 79

PLOT DATE: 2/13/2009
FILENAME: C:\working\B\sms17071\LCS7_C-17.dgn

LCS7_C-17.dgn 2/13/2009 4:21:27 PM

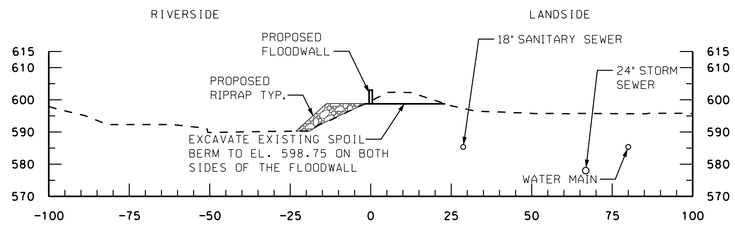

7S 34+00

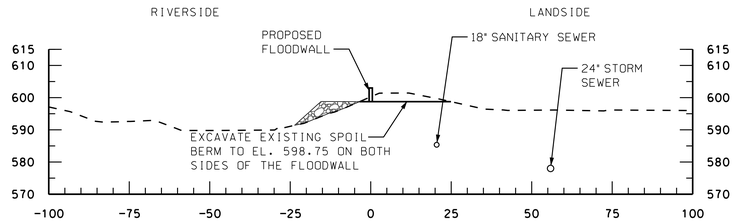

7S 33+00

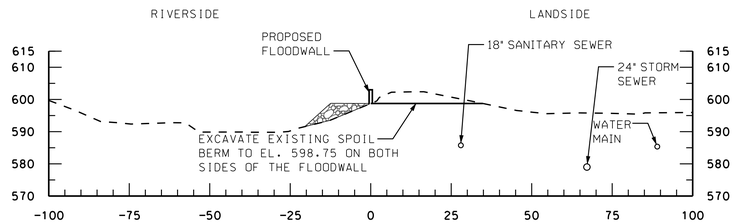

7S 32+00

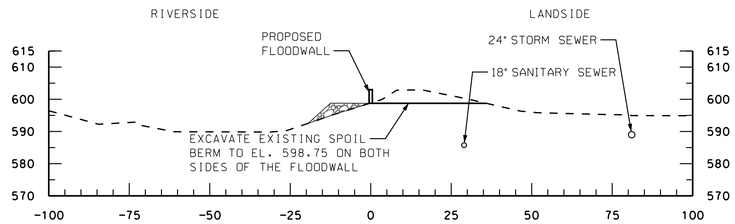

7S 31+00

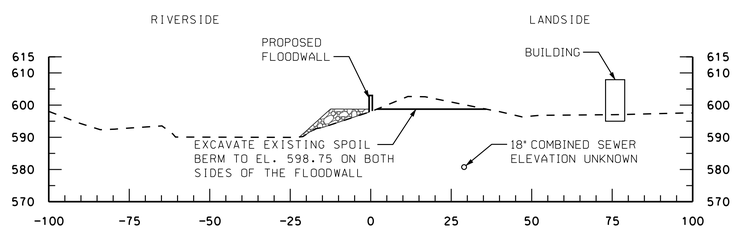

7S 30+00

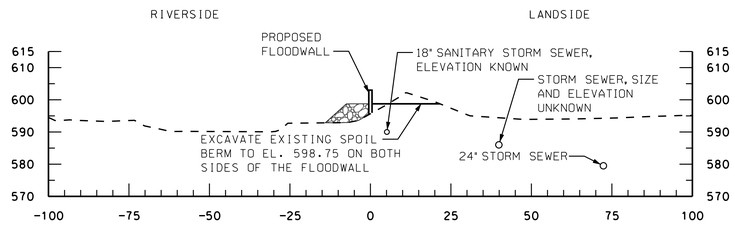

7S 39+00

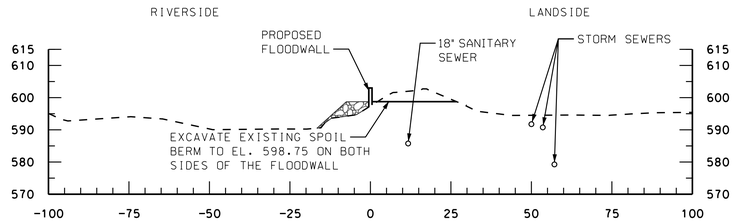

7S 38+00

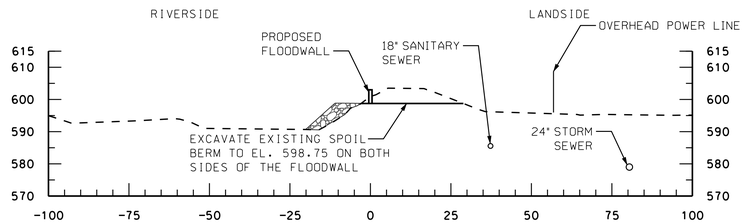

7S 37+00

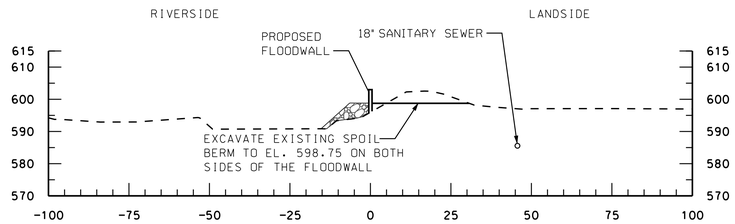

7S 36+00

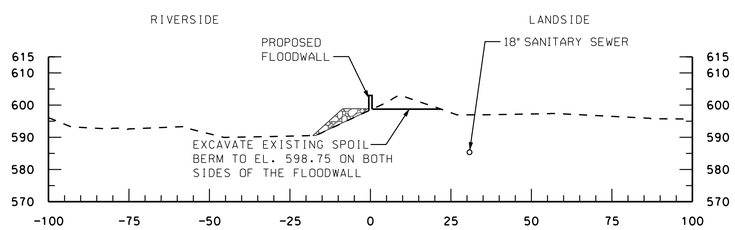

7S 35+00

NOTES:

1. FOR CONTROL POINTS AND WORKLIMITS SEE SHEET C-02.
2. FOR PLAN AND PROFILE SEE SHEETS C-07 AND C-08.
3. FOR FLOODWALL SECTIONS SEE SHEETS S-12, S-13, AND S-14.
4. FOR THE RIPRAP SCHEDULE AND RIPRAP PLACEMENT DETAILS SEE SHEET C-30.
5. HYDROGRAPHIC SURVEY NOT TAKEN AT WATERWAYS. WATER SURFACE IS SHOWN AT TIME OF SURVEY.

20' 10' 0 20'

SCALE: 1'' = 20'-0"

US Army Corps of Engineers
Chicago District

SYMBOL	AMENDMENT DESCRIPTION	DATE APPROVED	SYMBOL	DESCRIPTION	DATE APPROVED

DESIGNED BY: MWC
DATE: FEBRUARY 2009
DRAWN BY: JW/DB
SCALE: AS SHOWN
CHECKED BY: JAG
SOLICITATION NUMBER: W912P6-09-B-0002
SUBMITTED BY: JOHN A. GROBOSKI, P.E.
DATE: 7/31/08

U.S. ARMY ENGINEER DISTRICT
CORPS OF ENGINEERS
CHICAGO, ILLINOIS

LITTLE CALUMET RIVER, INDIANA
LOCAL FLOOD PROTECTION
STAGE VII - FLOODWALL

CROSS SECTION
STA. 7S 30+00 TO 7S 39+00

SHEET REFERENCE NUMBER:
C-18
SHEET 27 OF 79

PLOT DATE: 2/13/2009
FILENAME: C:\working8\vms17071\CS7_C-18.dgn

CS7_C-18.dgn 2/13/2009 4:21:56 PM

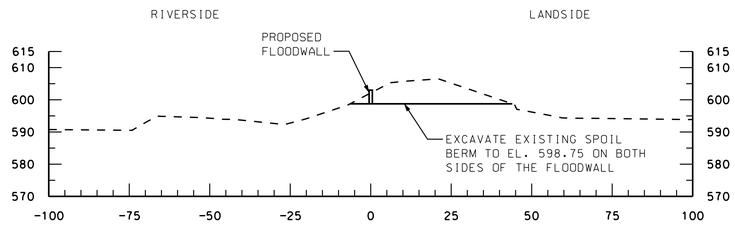

7S 44+00

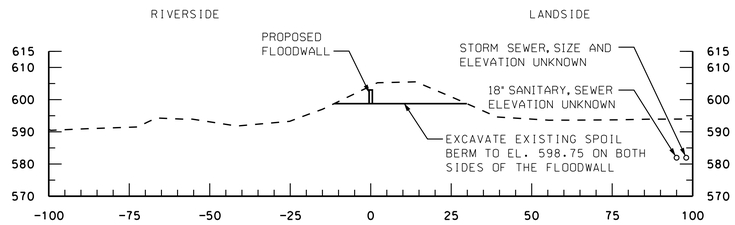

7S 43+00

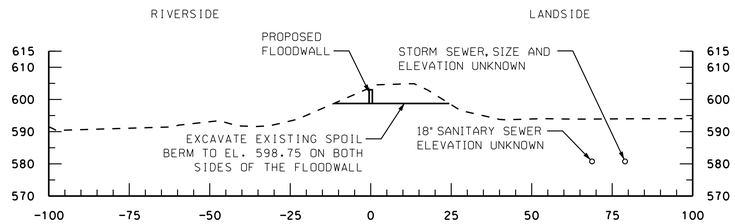

7S 42+00

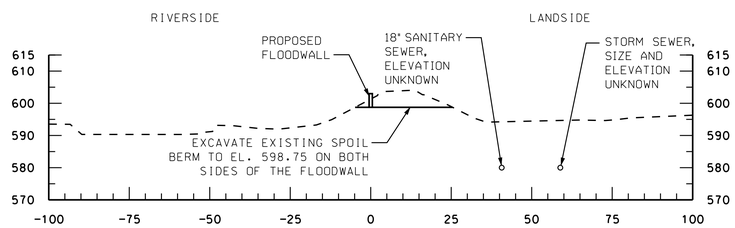

7S 41+00

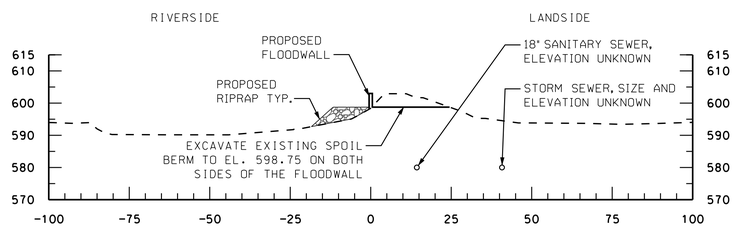

7S 40+00

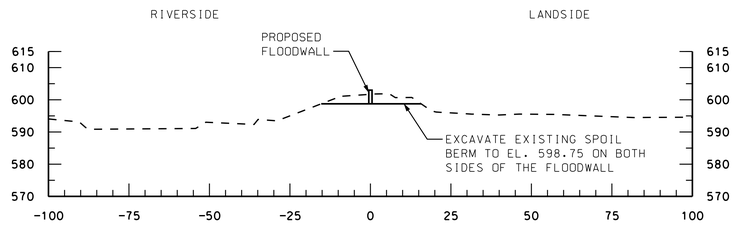

7S 49+00

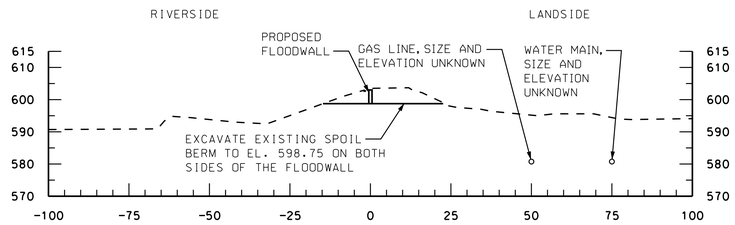

7S 48+00

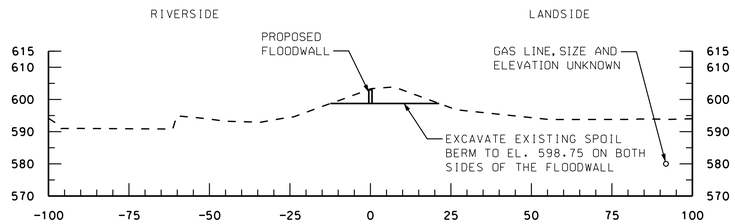

7S 47+00

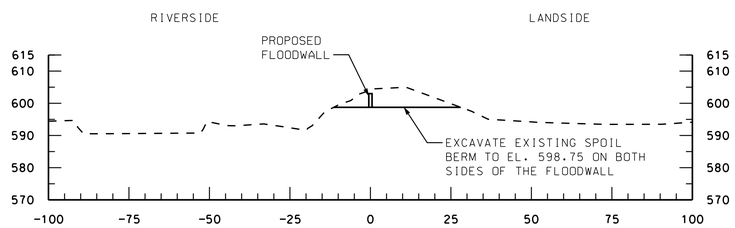

7S 46+00

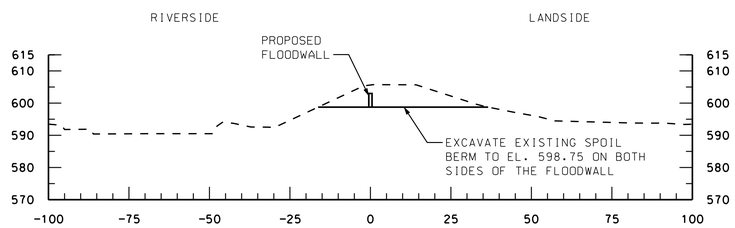

7S 45+00

NOTES:

1. FOR CONTROL POINTS AND WORKLIMITS SEE SHEET C-02.
2. FOR PLAN AND PROFILE SEE SHEETS C-08 AND C-09.
3. FOR FLOODWALL SECTIONS SEE SHEETS S-12, S-13, AND S-14.
4. FOR THE RIPRAP SCHEDULE AND RIPRAP PLACEMENT DETAILS SEE SHEET C-30.
5. HYDROGRAPHIC SURVEY NOT TAKEN AT WATERWAYS. WATER SURFACE IS SHOWN AT TIME OF SURVEY.

20' 10' 0 20'

SCALE: 1'' = 20'-0"

US Army Corps of Engineers
Chicago District

SYMBOL	AMENDMENT DESCRIPTION	DATE APPROVED	SYMBOL	DESCRIPTION	DATE APPROVED

DESIGNED BY: MWC
DATE: FEBRUARY 2009
DRAWN BY: JW/DB
SCALE: AS SHOWN
CHECKED BY: JAG
SOLICITATION NUMBER: W912P6-09-B-0002
JOHN A. GROBOSKI, P.E.
SUBMITTED BY:
DATE: 7/31/08

U.S. ARMY ENGINEER DISTRICT
CORPS OF ENGINEERS
CHICAGO, ILLINOIS

LITTLE CALUMET RIVER, INDIANA
LOCAL FLOOD PROTECTION
STAGE VII - FLOODWALL

CROSS SECTION
STA. 7S 40+00 TO 7S 49+00

SHEET REFERENCE NUMBER:
C-19
SHEET 28 OF 79

PLOT DATE: 2/13/2009
FILENAME: C:\working8\vms17071\CS7_C-19.dgn

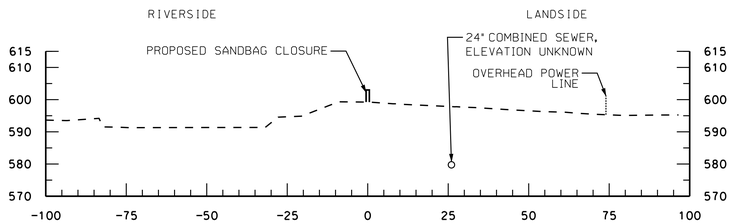

7S 52+86

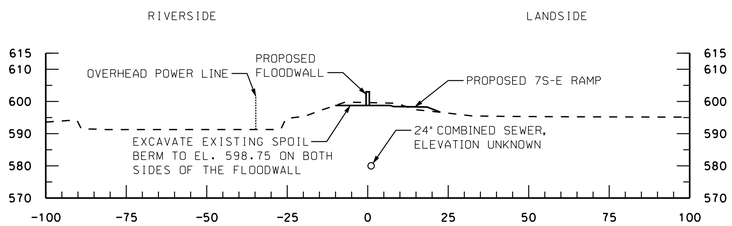

7S 52+00

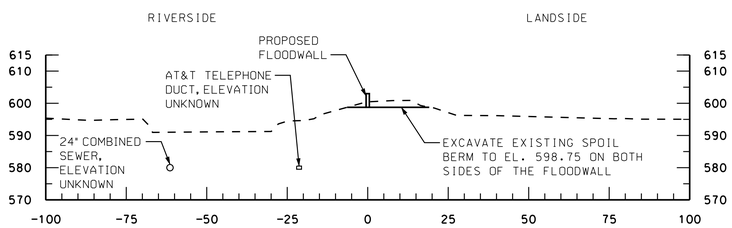

7S 51+00

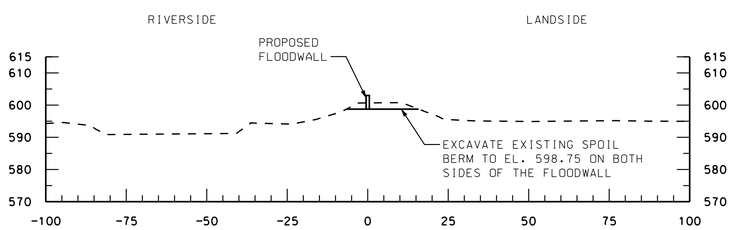

7S 50+00

NOTES:

1. FOR CONTROL POINTS AND WORKLIMITS SEE SHEET C-02.
2. FOR PLAN AND PROFILE SEE SHEET C-09.
3. FOR FLOODWALL SECTIONS SEE SHEETS S-12, S-13, AND S-14.
4. HYDROGRAPHIC SURVEY NOT TAKEN AT WATERWAYS. WATER SURFACE IS SHOWN AT TIME OF SURVEY.

20' 10' 0 20'

SCALE: 1'' = 20'-0"

US Army Corps of Engineers Chicago District

SYMBOL	AMENDMENT DESCRIPTION	DATE	APPROVED	SYMBOL	DESCRIPTION	DATE	APPROVED

U.S. ARMY ENGINEER DISTRICT
CORPS OF ENGINEERS
CHICAGO, ILLINOIS

DESIGNED BY: MWC
DATE: FEBRUARY 2009
DRAWN BY: JW/DB
SCALE: AS SHOWN
CHECKED BY: JAG
SOLICITATION NUMBER: W912P6-09-B-0002
JOHN A. GROBOSKI, P.E. 7/31/08
SUBMITTED BY:
DATE:

LITTLE CALUMET RIVER, INDIANA
LOCAL FLOOD PROTECTION
STAGE VII - FLOODWALL

CROSS SECTION
STA. 7S 50+00 TO 7S 52+86

SHEET REFERENCE NUMBER:
C-20

PLOT DATE: 2/17/2009
FILENAME: C:\Documents and Settings\h6tecmc9\My Documents\PW_Working_Directory_MC\dms17071\LCS7_C-20.dgn

LCS7_C-20.dgn 2/17/2009 10:37:14 AM

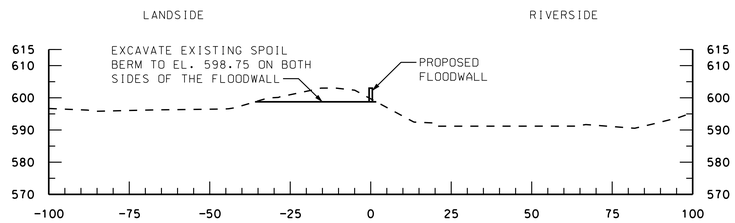

7N 4+00

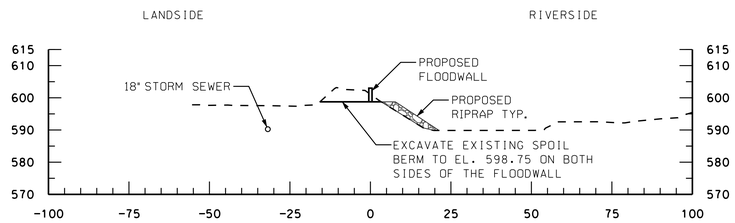

7N 9+00

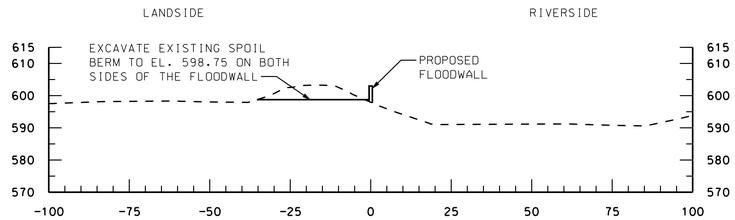

7N 3+00

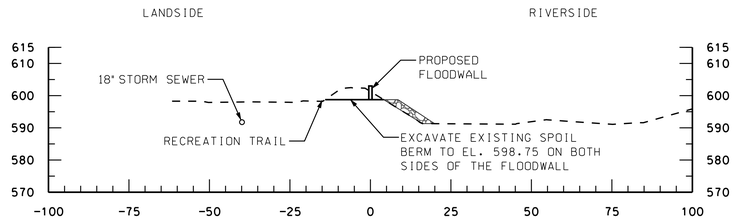

7N 8+00

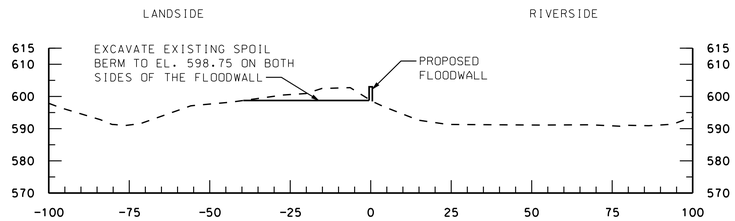

7N 2+00

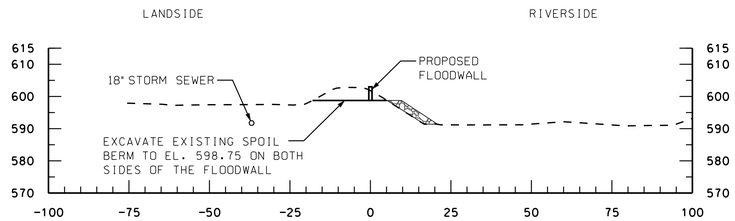

7N 7+00

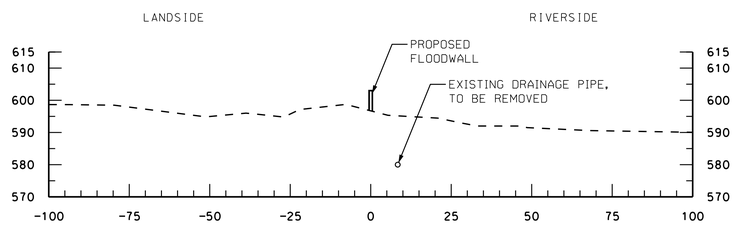

7N 1+00

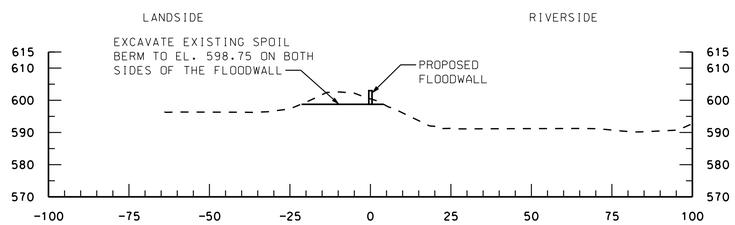

7N 6+00

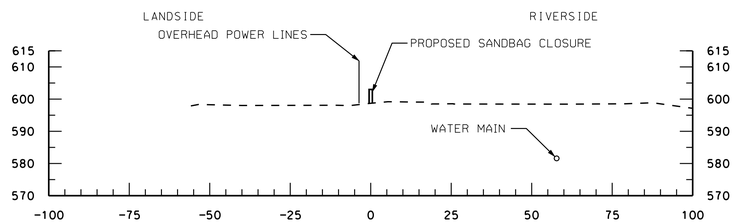

7N 0+00

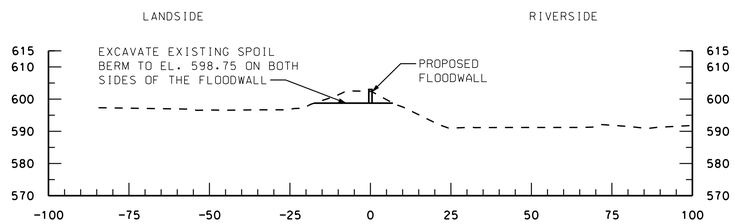

7N 5+00

NOTES:

1. FOR CONTROL POINTS AND WORKLIMITS SEE SHEET C-03.
2. FOR PLAN AND PROFILE SEE SHEET C-10.
3. FOR FLOODWALL SECTIONS SEE SHEETS S-12, S-13, AND S-14.
4. FOR THE RIPRAP SCHEDULE AND RIPRAP PLACEMENT DETAILS SEE SHEET C-30.
5. HYDROGRAPHIC SURVEY NOT TAKEN AT WATERWAYS. WATER SURFACE IS SHOWN AT TIME OF SURVEY.
6. FOR RECREATION TRIAL CONTROL POINTS AND TYPICAL SECTIONS SEE SHEET R-09.

20' 10' 0 20'

SCALE: 1'' = 20'-0"

US Army Corps of Engineers Chicago District

SYMBOL	AMENDMENT DESCRIPTION	DATE	APPROVED	SYMBOL	DESCRIPTION	DATE	APPROVED

DESIGNED BY: MWC
DATE: FEBRUARY 2009
DRAWN BY: JW/DB
SCALE: AS SHOWN
CHECKED BY: JAG
SOLICITATION NUMBER: W912P6-09-B-0002
SUBMITTED BY: JOHN A. GROBOSKI, P.E.
DATE: 7/31/08

U.S. ARMY ENGINEER DISTRICT
CORPS OF ENGINEERS
CHICAGO, ILLINOIS

LITTLE CALUMET RIVER, INDIANA
LOCAL FLOOD PROTECTION
STAGE VII - FLOODWALL

CROSS SECTION
STA. 7N 0+00 TO 7N 9+00

SHEET REFERENCE NUMBER:
C-21

SHEET 30 OF 79

PLOT DATE: 2/17/2009
FILENAME: C:\Documents and Settings\h6tecmc9\My Documents\PW_Working_Directory_MC\dms17071\LCS7_C-21.dgn

LCS7_C-21.dgn 2/17/2009 10:34:28 AM

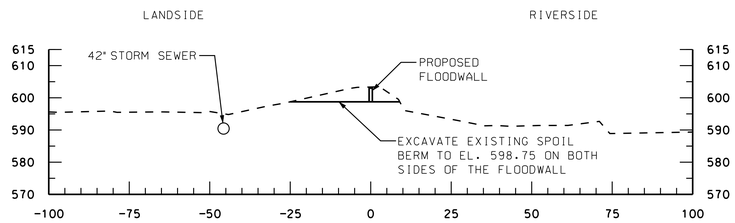

7N 14+00

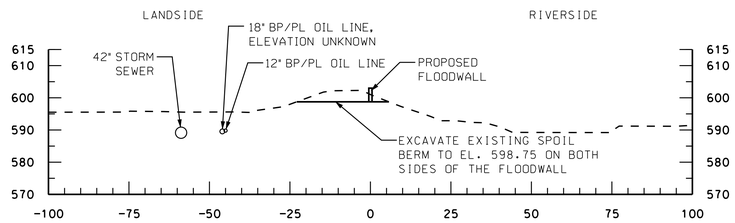

7N 19+00

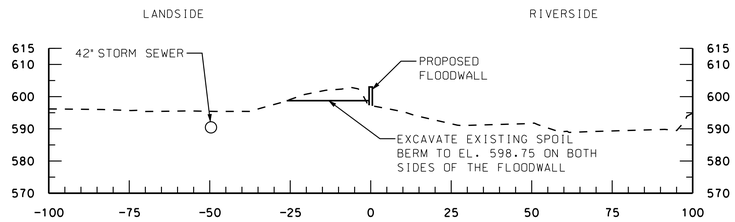

7N 13+00

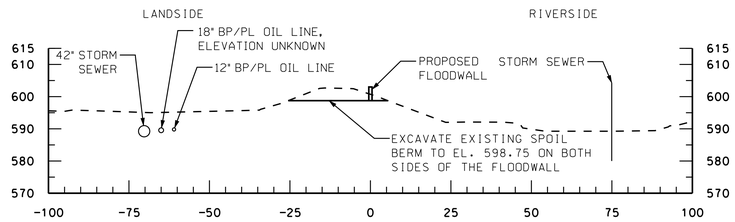

7N 18+00

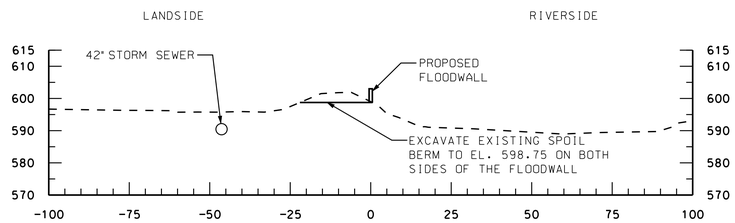

7N 12+00

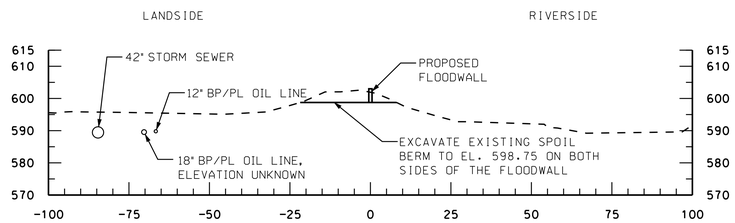

7N 17+00

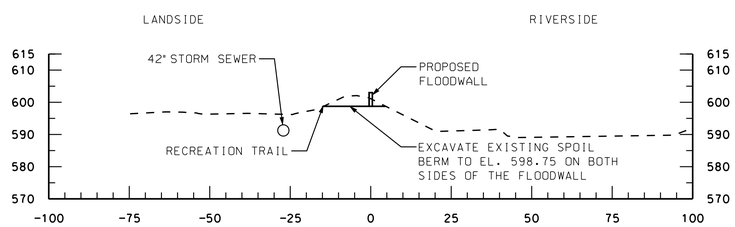

7N 11+00

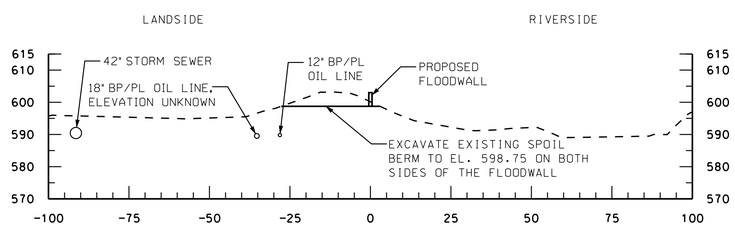

7N 16+00

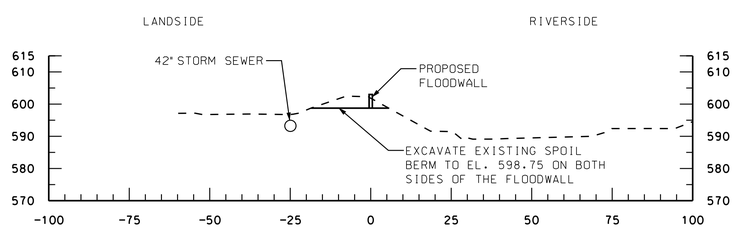

7N 10+00

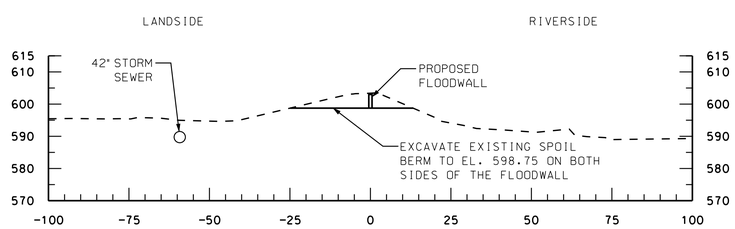

7N 15+00

NOTES:

1. FOR CONTROL POINTS AND WORKLIMITS SEE SHEET C-03.
2. FOR PLAN AND PROFILE SEE SHEETS C-10 AND C-11.
3. FOR FLOODWALL SECTIONS SEE SHEETS S-12, S-13, AND S-14.
4. HYDROGRAPHIC SURVEY NOT TAKEN AT WATERWAYS. WATER SURFACE IS SHOWN AT TIME OF SURVEY.
5. FOR RECREATION TRIAL CONTROL POINTS AND TYPICAL SECTIONS SEE SHEET R-09.

20' 10' 0 20'

SCALE: 1'' = 20'-0"

US Army Corps of Engineers
Chicago District

SYMBOL	AMENDMENT DESCRIPTION	DATE APPROVED	SYMBOL	DESCRIPTION	DATE APPROVED

DESIGNED BY: MWC
DATE: FEBRUARY 2009
DRAWN BY: JW/DB
SCALE: AS SHOWN
CHECKED BY: JAG
SOLICITATION NUMBER: W912P6-09-B-0002
SUBMITTED BY: JOHN A. GROBOSKI, P.E.
DATE: 7/31/08

U.S. ARMY ENGINEER DISTRICT
CORPS OF ENGINEERS
CHICAGO, ILLINOIS

LITTLE CALUMET RIVER, INDIANA
LOCAL FLOOD PROTECTION
STAGE VII - FLOODWALL

CROSS SECTION
STA. 7N 10+00 TO 7N 19+00

SHEET REFERENCE NUMBER:
C-22
SHEET 31 OF 79

PLOT DATE: 2/13/2009
FILENAME: C:\working\B\dms17071\LCS7_C-22.dgn

LCS7_C-22.dgn 2/13/2009 4:24:14 PM

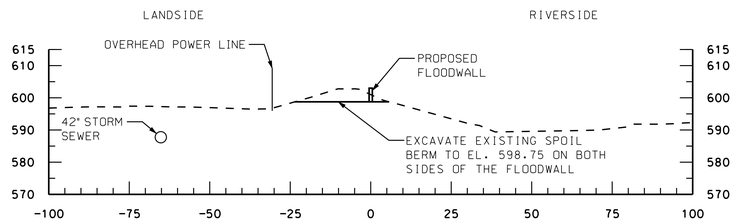

7N 24+00

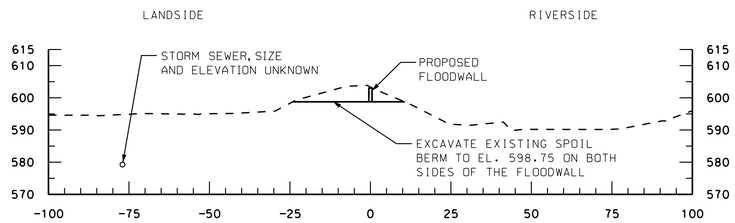

7N 29+00

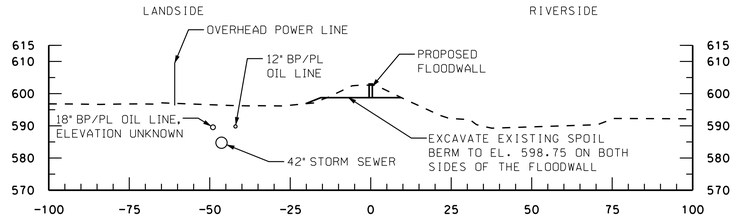

7N 23+00

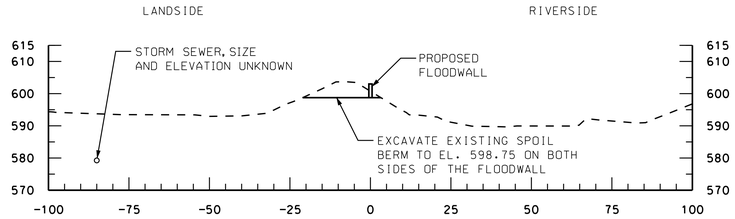

7N 28+00

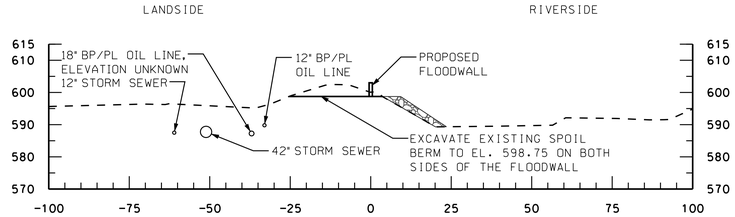

7N 22+00

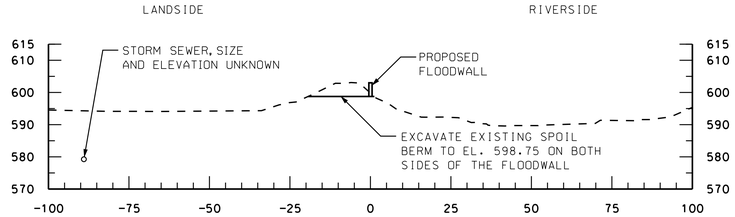

7N 27+00

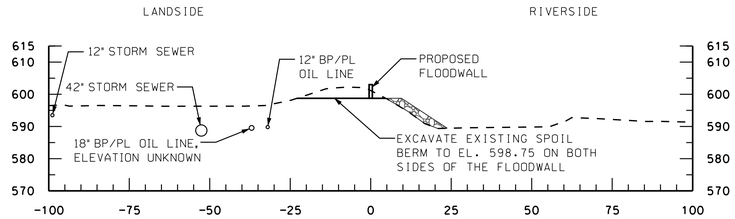

7N 21+00

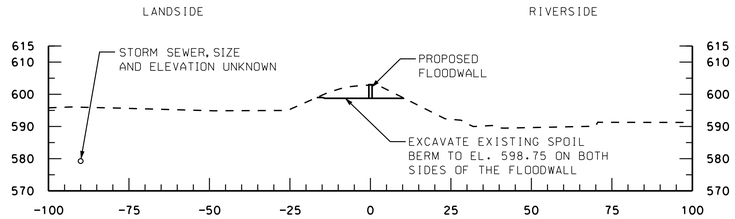

7N 26+00

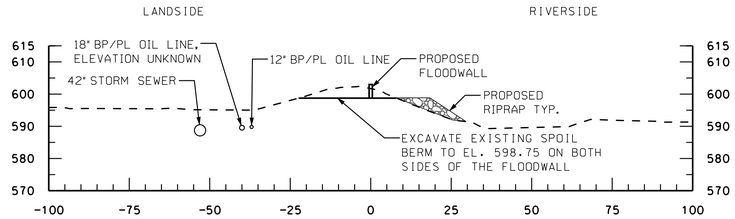

7N 20+00

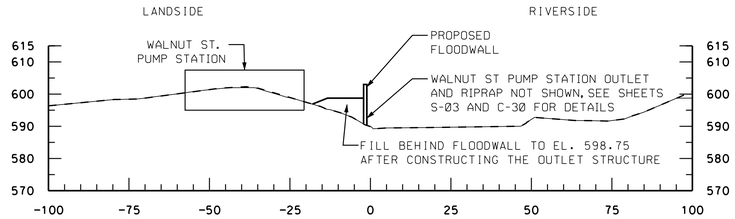

7N 25+00

NOTES:

1. FOR CONTROL POINTS AND WORKLIMITS SEE SHEETS C-03 AND C-04.
2. FOR PLAN AND PROFILE SEE SHEETS C-11 AND C-12.
3. FOR FLOODWALL SECTIONS SEE SHEETS S-12, S-13, AND S-14.
4. FOR THE RIPRAP SCHEDULE AND RIPRAP PLACEMENT DETAILS SEE SHEET C-30.
5. HYDROGRAPHIC SURVEY NOT TAKEN AT WATERWAYS. WATER SURFACE IS SHOWN AT TIME OF SURVEY.
6. FOR RECREATION TRIAL CONTROL POINTS AND TYPICAL SECTIONS SEE SHEET R-09.

20' 10' 0 20'

SCALE: 1'' = 20'-0"

US Army Corps of Engineers
Chicago District

SYMBOL	AMENDMENT DESCRIPTION	DATE APPROVED	SYMBOL	DESCRIPTION	DATE APPROVED

DESIGNED BY: MWC
DATE: FEBRUARY 2009
DRAWN BY: JW/DB
SCALE: AS SHOWN
CHECKED BY: JAG
SOLICITATION NUMBER: W912P6-09-B-0002
SUBMITTED BY: JOHN A. GROBOSKI, P.E.
DATE: 7/31/08

U.S. ARMY ENGINEER DISTRICT
CORPS OF ENGINEERS
CHICAGO, ILLINOIS

LITTLE CALUMET RIVER, INDIANA
LOCAL FLOOD PROTECTION
STAGE VII - FLOODWALL

CROSS SECTION
STA. 7N 20+00 TO 7N 29+00

SHEET REFERENCE NUMBER:
C-23

SHEET 32 OF 79

PLOT DATE: 2/13/2009
FILENAME: C:\working\B\dms17071\LCS7_C-23.dgn

LCS7_C-23.dgn 2/13/2009 4:24:47 PM

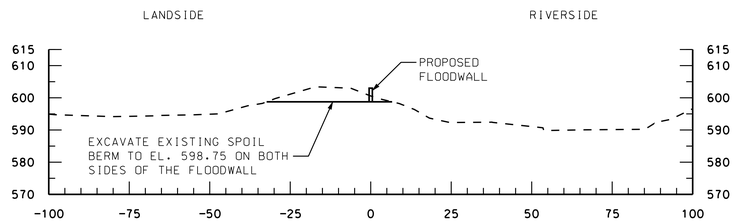

7N 34+00

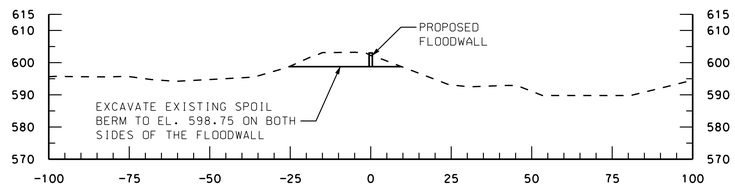

7N 33+00

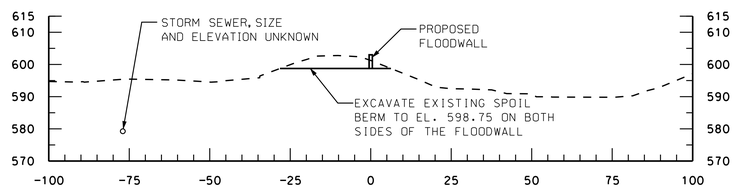

7N 32+00

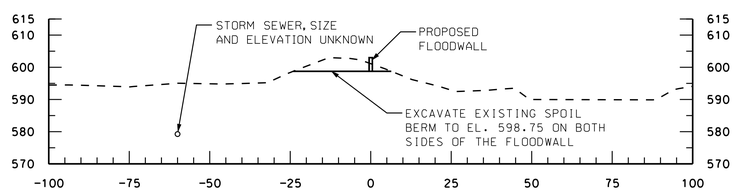

7N 31+00

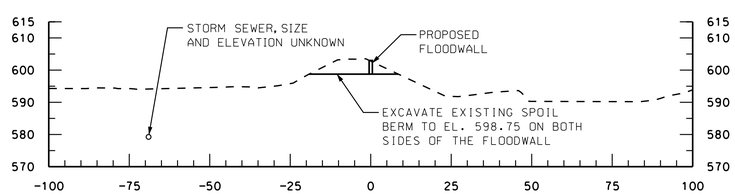

7N 30+00

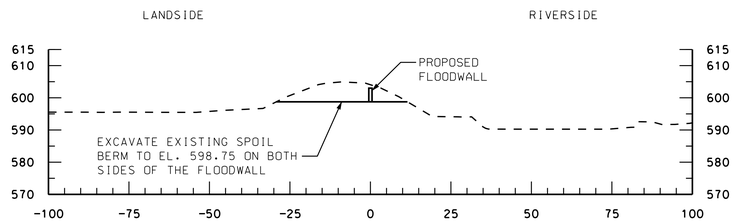

7N 39+00

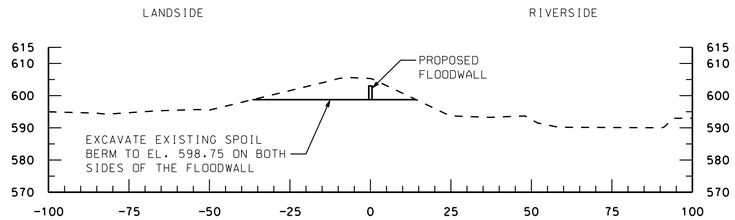

7N 38+00

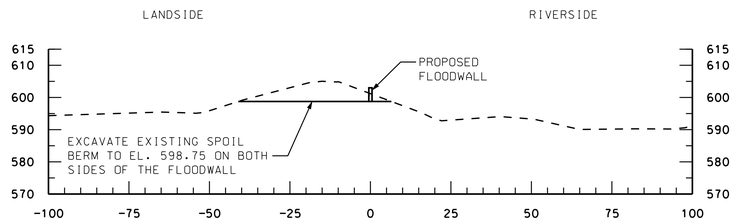

7N 37+00

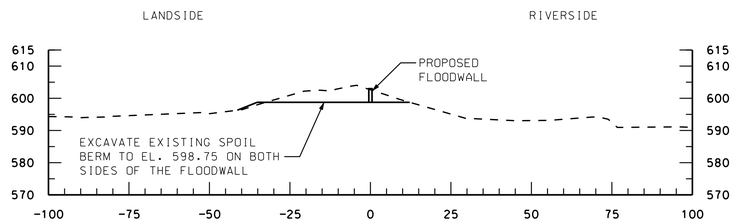

7N 36+00

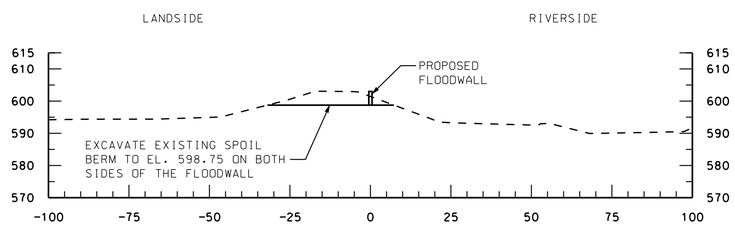

7N 35+00

NOTES:

1. FOR CONTROL POINTS AND WORKLIMITS SEE SHEET C-04.
2. FOR PLAN AND PROFILE SEE SHEETS C-12, C-13 AND C-14.
3. FOR FLOODWALL SECTIONS SEE SHEETS S-12, S-13, AND S-14.
4. HYDROGRAPHIC SURVEY NOT TAKEN AT WATERWAYS. WATER SURFACE IS SHOWN AT TIME OF SURVEY.
5. FOR RECREATION TRIAL CONTROL POINTS AND TYPICAL SECTIONS SEE SHEET R-09.

20' 10' 0 20'

SCALE: 1'' = 20'-0"

US Army Corps of Engineers
Chicago District

SYMBOL	AMENDMENT DESCRIPTION	DATE APPROVED	SYMBOL	DESCRIPTION	DATE APPROVED

DESIGNED BY: MWC
DATE: FEBRUARY 2009
DRAWN BY: JW/DB
SCALE: AS SHOWN
CHECKED BY: JAG
SOLICITATION NUMBER: W912P6-09-B-0002
JOHN A. GROBOSKI, P.E.
SUBMITTED BY:
DATE: 7/31/08

U.S. ARMY ENGINEER DISTRICT
CORPS OF ENGINEERS
CHICAGO, ILLINOIS

LITTLE CALUMET RIVER, INDIANA
LOCAL FLOOD PROTECTION
STAGE VII - FLOODWALL

CROSS SECTION
STA. 7N 30+00 TO 7N 39+00

SHEET REFERENCE NUMBER:
C-24
SHEET 33 OF 79

PLOT DATE: 2/13/2009
FILENAME: C:\work\ngB\dms17071\LCS7_C-24.dgn

LCS7_C-24.dgn 2/13/2009 4:25:07 PM

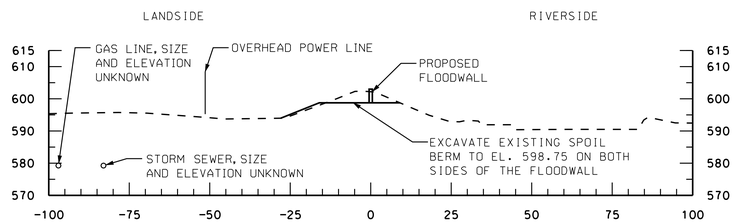

7N 44+00

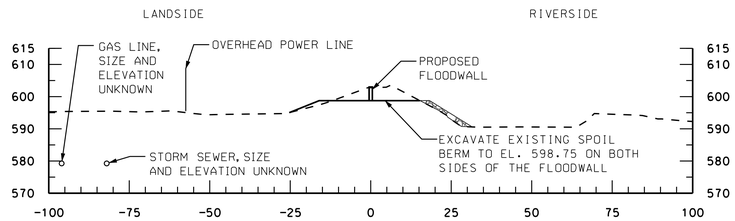

7N 43+00

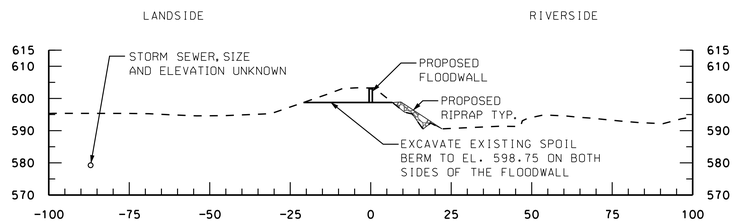

7N 42+00

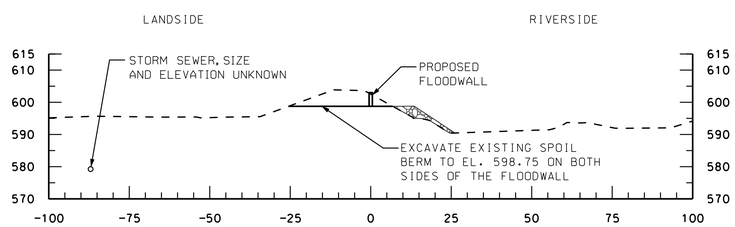

7N 41+00

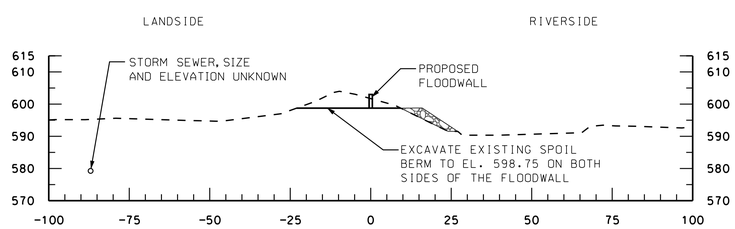

7N 40+00

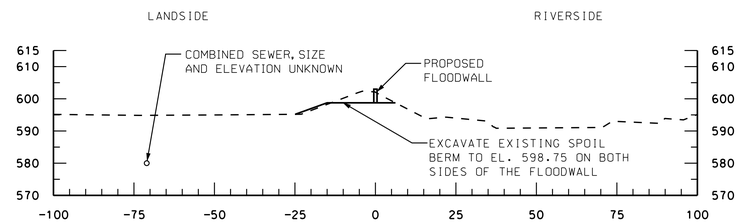

7N 49+00

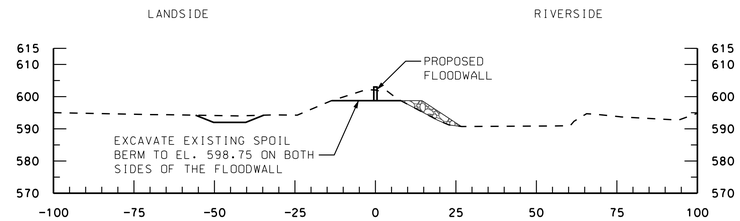

7N 48+00

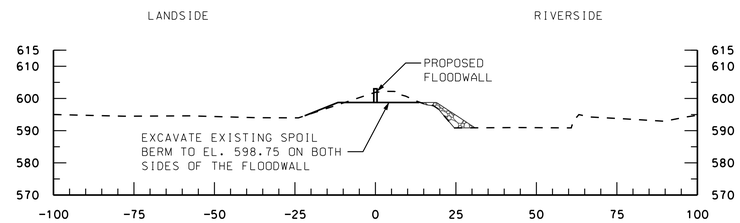

7N 47+00

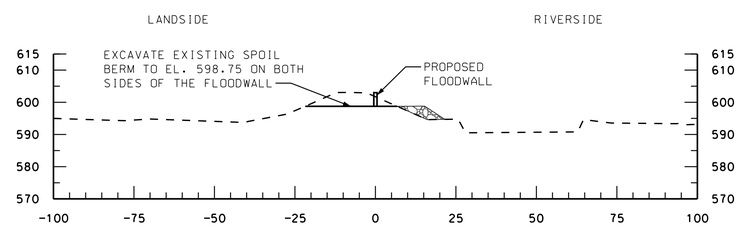

7N 46+00

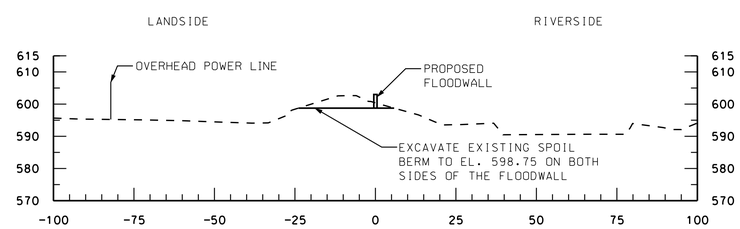

7N 45+00

NOTES:

1. FOR CONTROL POINTS AND WORKLIMITS SEE SHEET C-04.
2. FOR PLAN AND PROFILE SEE SHEET C-14.
3. FOR FLOODWALL SECTIONS SEE SHEETS S-12, S-13, AND S-14.
4. FOR THE RIPRAP SCHEDULE AND RIPRAP PLACEMENT DETAILS SEE SHEET C-30.
5. HYDROGRAPHIC SURVEY NOT TAKEN AT WATERWAYS. WATER SURFACE IS SHOWN AT TIME OF SURVEY.
6. FOR RECREATION TRIAL CONTROL POINTS AND TYPICAL SECTIONS SEE SHEET R-09.

20' 10' 0 20'

SCALE: 1'' = 20'-0"

US Army Corps of Engineers
Chicago District

SYMBOL	AMENDMENT DESCRIPTION	DATE APPROVED	SYMBOL	DESCRIPTION	DATE APPROVED

DESIGNED BY: MWC
DATE: FEBRUARY 2009
DRAWN BY: JW/DB
SCALE: AS SHOWN
CHECKED BY: JAG
SOLICITATION NUMBER: W912P6-09-B-0002
SUBMITTED BY: JOHN A. GROBOSKI, P.E.
DATE: 7/31/08

U.S. ARMY ENGINEER DISTRICT
CORPS OF ENGINEERS
CHICAGO, ILLINOIS

LITTLE CALUMET RIVER, INDIANA
LOCAL FLOOD PROTECTION
STAGE VII - FLOODWALL

CROSS SECTION
STA. 7N 40+00 TO 7N 49+00

SHEET REFERENCE NUMBER:
C-25
SHEET 34 OF 79

PLOT DATE: 2/13/2009
FILENAME: C:\working\BR\dms17071\LCS7_C-25.dgn

LCS7_C-25.dgn 2/13/2009 4:25:29 PM

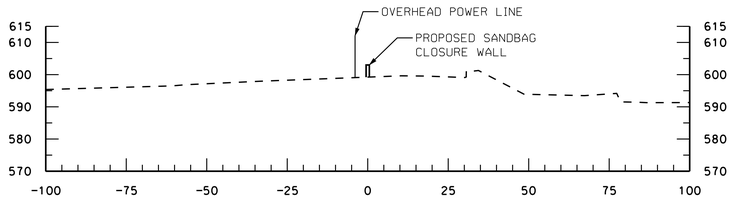

7N 52+39

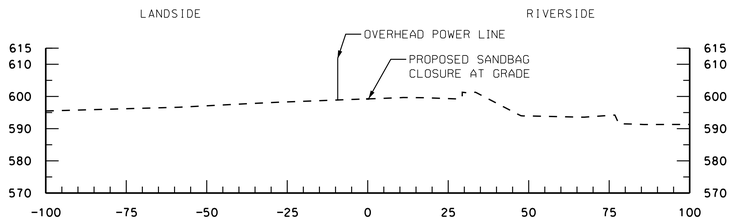

7N 52+00

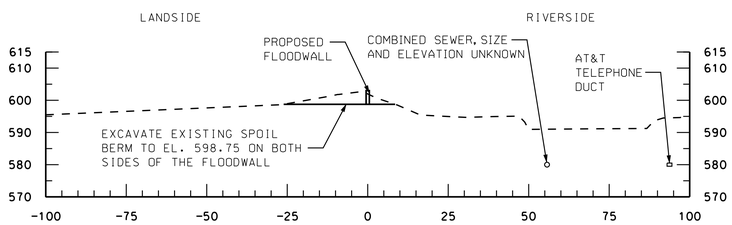

7N 51+00

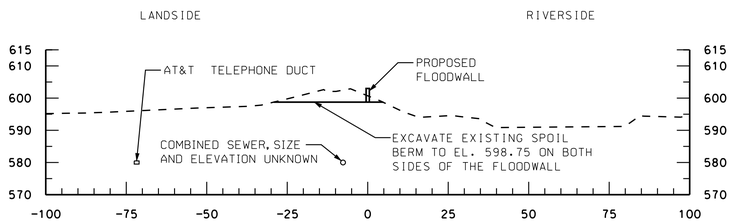

7N 50+00

NOTES:

1. FOR CONTROL POINTS AND WORKLIMITS SEE SHEET C-04.
2. FOR PLAN AND PROFILE SEE SHEET C-14.
3. FOR FLOODWALL SECTIONS SEE SHEETS S-12, S-13, AND S-14.
4. HYDROGRAPHIC SURVEY NOT TAKEN AT WATERWAYS. WATER SURFACE IS SHOWN AT TIME OF SURVEY.
5. FOR RECREATION TRIAL CONTROL POINTS AND TYPICAL SECTIONS SEE SHEET R-09.

20' 10' 0 20'

SCALE: 1'' = 20'-0"

US Army Corps of Engineers Chicago District

SYMBOL	AMENDMENT DESCRIPTION	DATE	APPROVED	SYMBOL	DESCRIPTION	DATE	APPROVED

U.S. ARMY ENGINEER DISTRICT
CORPS OF ENGINEERS
CHICAGO, ILLINOIS

DESIGNED BY: MWC
DATE: FEBRUARY 2009
DRAWN BY: JW/DB
SCALE: AS SHOWN
CHECKED BY: JAG
SOLICITATION NUMBER: W912P6-09-B-0002
SUBMITTED BY: JOHN A. GROBOSKI, P.E.
DATE: 7/31/08

LITTLE CALUMET RIVER, INDIANA
LOCAL FLOOD PROTECTION
STAGE VII - FLOODWALL

CROSS SECTION
STA. 7N 50+00 TO 7N 52+39

SHEET REFERENCE NUMBER:
C-26

SHEET 35 OF 79

PLOT DATE: 2/17/2009
FILENAME: C:\Documents and Settings\h6tecmc9\My Documents\PW_Working_Directory_MC\dms17071\LCS7_C-26.dgn

LCS7_C-26.dgn 2/17/2009 10:32:57 AM

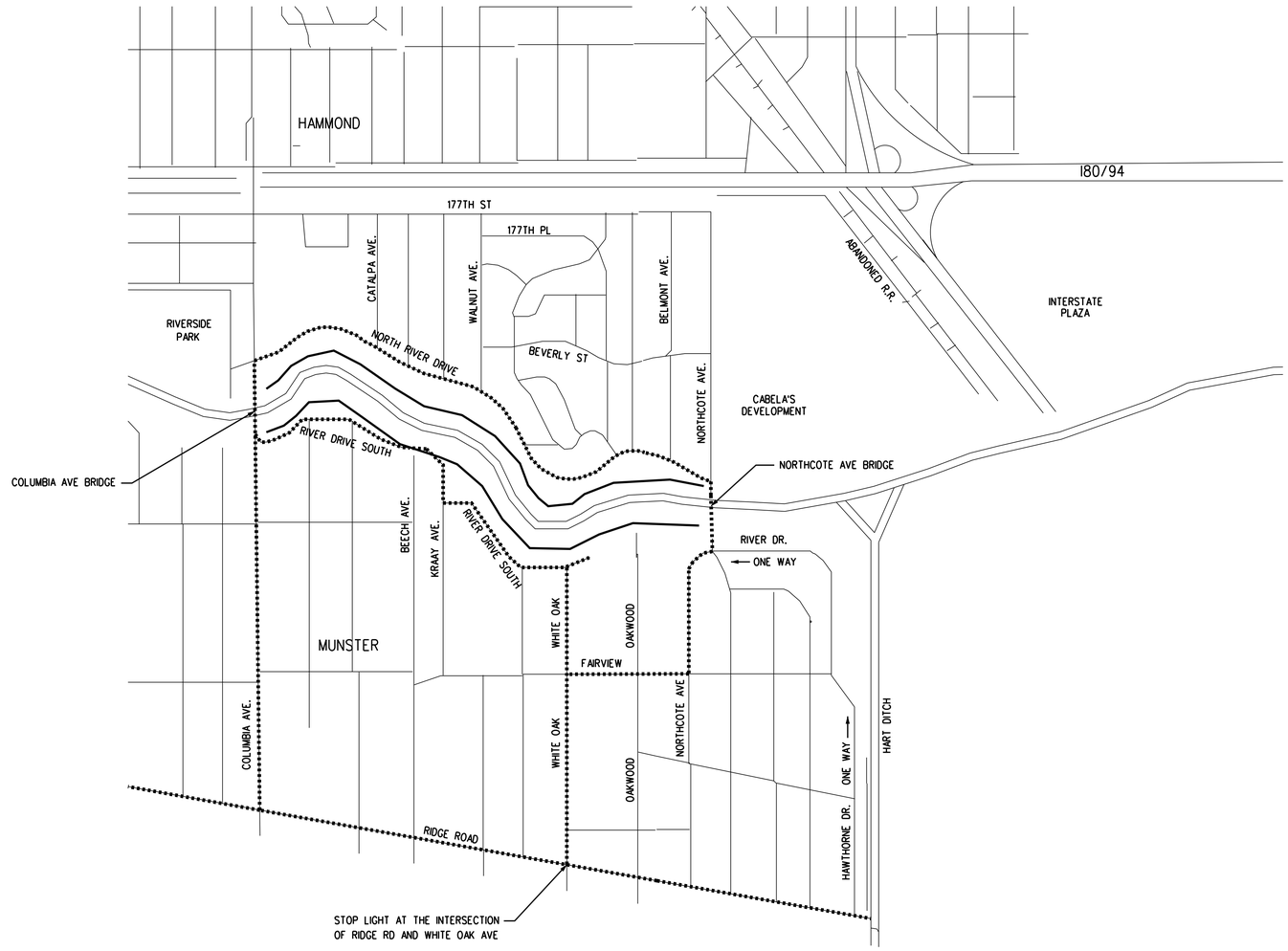

LEGEND:

HAUL ROUTE

500 0 500 1000 1500

SCALE IN FEET

N

NOTES:

1. THE CONTRACTOR SHALL USE THE HAUL ROUTES SHOWN EXCEPT AS OTHERWISE NOTED BELOW OR SPECIFIED IN SECTION 01 55 26.00 03 OF THE SPECIFICATIONS.

2. THE CONTRACTOR SHALL OBTAIN SIGNED AGREEMENTS AND/OR PERMITS FROM EACH MUNICIPALITY RECEIVING CONSTRUCTION TRAFFIC AND COORDINATE WITH INDOT FOR USE OF ALL STATE ROUTES.

3. THE CONTRACTOR CAN PROPOSE ALTERNATE HAUL ROUTES AS LONG AS THEY HAVE BEEN APPROVED BY THE MUNICIPALITIES RECIEVING THE CONSTRUCTION TRAFFIC.

4. THE CONTRACTOR IS RESPONSIBLE FOR OBTAINING AND NOT EXCEEDING LOAD LIMITS FOR ALL BRIDGES ON HAUL ROUTES.

US Army Corps of Engineers
Chicago District

SYMBOL	AMENDMENT DESCRIPTION	DATE APPROVED	SYMBOL	DESCRIPTION	DATE APPROVED

DESIGNED BY: MWC
DATE: FEBRUARY 2009
DRAWN BY: JW/DB
SCALE: AS SHOWN
CHECKED BY: JAG
SOLICITATION NUMBER: W912P6-09-B-0002
SUBMITTED BY: JOHN A. GROBOSKI, P.E.
DATE: 7/31/08

U.S. ARMY ENGINEER DISTRICT
CORPS OF ENGINEERS
CHICAGO, ILLINOIS

LITTLE CALUMET RIVER, INDIANA
LOCAL FLOOD PROTECTION
STAGE VII - FLOODWALL

HAUL ROUTES

SHEET REFERENCE NUMBER:
C-27

PLOT DATE: 2/13/2009
FILENAME: C:\workingDB\dms17071\LCS7_C-27.dgn

LCS7_C-27.dgn 2/13/2009 4:26:25 PM

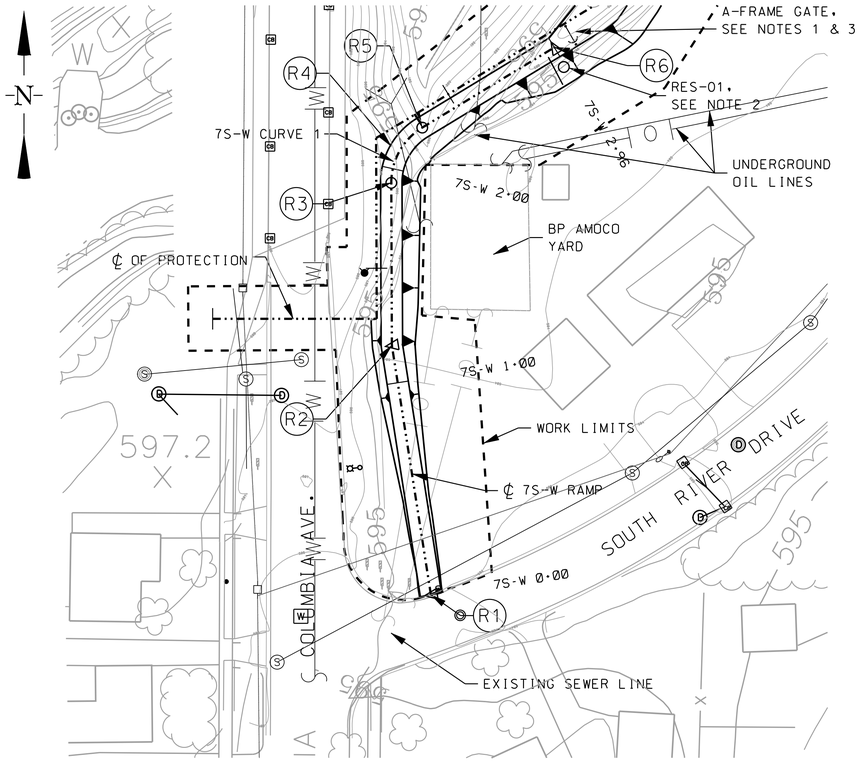

PLAN

30 0 30 60
SCALE IN FEET

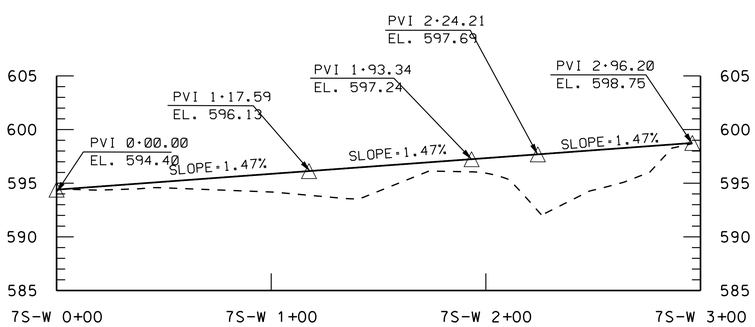

7S-W RAMP PROFILE

30 0 30 60
HORIZONTAL SCALE IN FEET

6 0 6 12
VERTICAL SCALE IN FEET

7S-W RAMP CENTERLINE COORDINATES				
POINT NAME	DESCRIPTION	NORTHING	EASTING	STATION
R1	POB	1482160.50	385997.71	0+00.00
R2	PI	1482276.68	385979.53	1+17.59
R3	PC	1482352.43	385979.26	1+93.34
R4	PI	1482369.39	385979.20	2+10.30
R5	PT	1482378.18	385993.69	2+24.21
R6	POE	1482415.55	386055.22	2+96.20

7S-W - Curve 1
Radius: 30.00
Delta: 58°56'24" Right
Length: 30.86
Tangent: 16.95

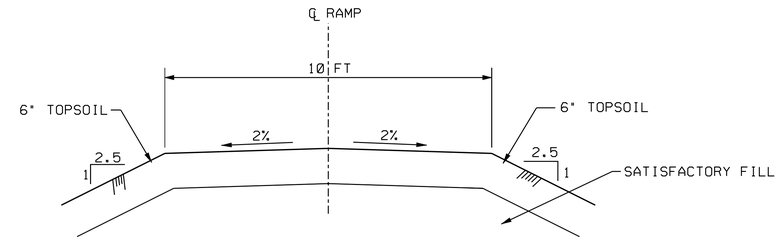

TYPICAL SECTION FOR 7S-W RAMP STA. 7S-W 0+00 TO 7S-W 1+30

N.T.S.

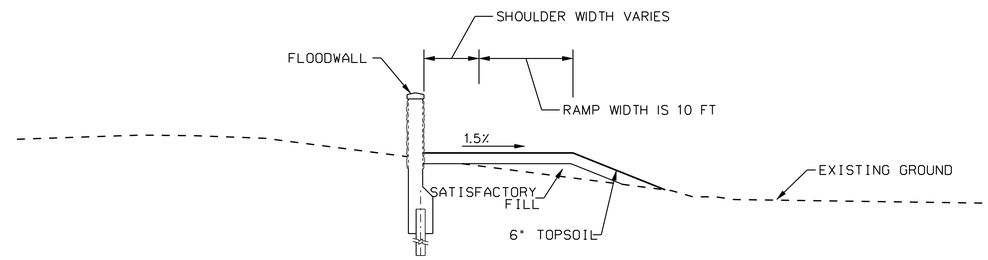

TYPICAL SECTION FOR 7S-W RAMP STA. 7S-W 1+30 TO 7S-W 2+09

N.T.S.

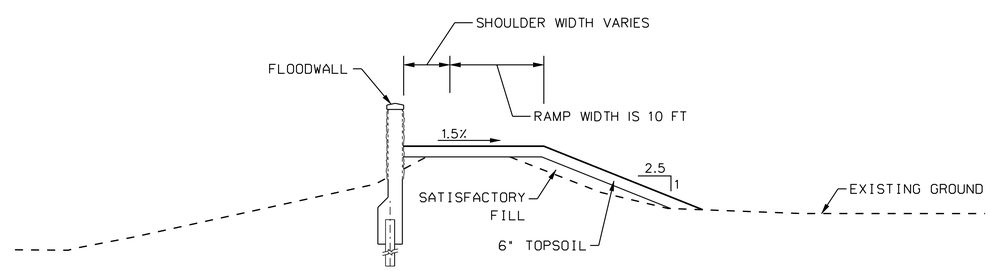

TYPICAL SECTION FOR 7S-W RAMP STA. 7S-W 2+09 TO 7S-W 2+96

N.T.S.

NOTES:

1. SEE SHEET R-08 FOR A-FRAME GATE DETAILS.
2. SEE SHEET R-06 FOR SIGN DETAILS.
3. THE CONTRACTOR SHALL PAINT, FLAG, OR STAKE LOCATIONS OF SIGNS AND GATES FOR FINAL APPROVAL OF THE COR. ONCE THE LOCATIONS HAVE BEEN APPROVED THE GATES SHALL BE PLACED.

US Army Corps of Engineers
Chicago District

SYMBOL	AMENDMENT DESCRIPTION	DATE APPROVED	SYMBOL	DESCRIPTION	DATE APPROVED

DESIGNED BY: MWC
DATE: FEBRUARY 2009
DRAWN BY: JW/OB
SCALE: AS SHOWN
CHECKED BY: JAG
SOLICITATION NUMBER: W912P6-09-B-0002
SUBMITTED BY: JOHN A. GROBOSKI, P.E.
DATE: 7/31/08

U.S. ARMY ENGINEER DISTRICT
CORPS OF ENGINEERS
CHICAGO, ILLINOIS

LITTLE CALUMET RIVER, INDIANA
LOCAL FLOOD PROTECTION
STAGE VII - FLOODWALL

7S-W RAMP
PLAN, SECTIONS AND DETAILS

SHEET REFERENCE NUMBER:
C-28
SHEET 37 OF 79

PLOT DATE: 2/17/2009
FILENAME: C:\Documents and Settings\h6lecmc9\My Documents\PW_Working_Directory_MC\dms17071\LCS7_C-28.dgn

LCS7_C-28.dgn 2/17/2009 9:56:47 AM

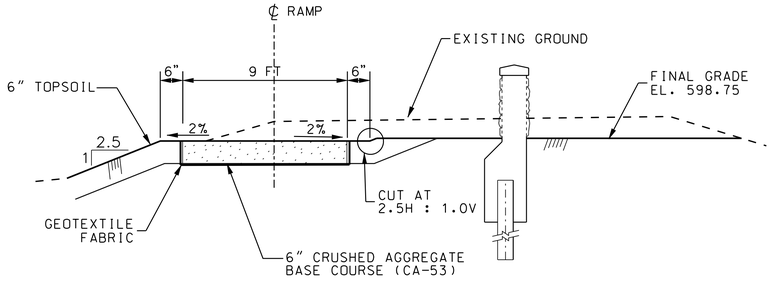

TYPICAL SECTION FOR 7S-E RAMP STA. 7S-E 0+45

N.T.S.

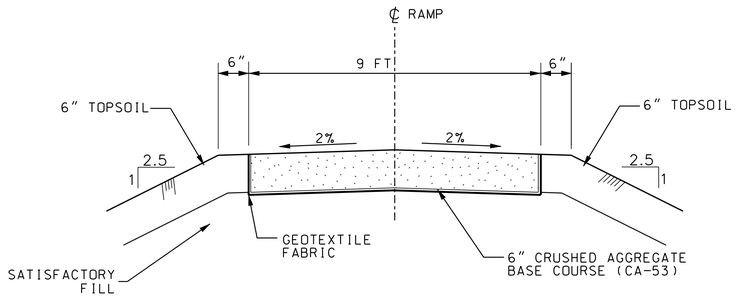

TYPICAL SECTION FOR 7S-E RAMP STA. 7S-E 0+15

N.T.S.

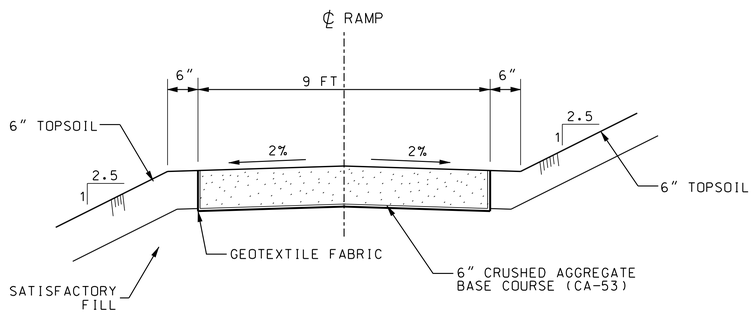

TYPICAL SECTION FOR 7S-E RAMP STA. 7S-E 0+00

N.T.S.

NOTES:

1. SEE SHEET R-08 FOR A-FRAME GATE DETAILS.
2. SEE SHEET R-06 FOR SIGN DETAILS.
3. THE CONTRACTOR SHALL PAINT, FLAG, OR STAKE LOCATIONS OF SIGNS AND GATES FOR FINAL APPROVAL OF THE COR. ONCE THE LOCATIONS HAVE BEEN APPROVED THE GATES SHALL BE PLACED.

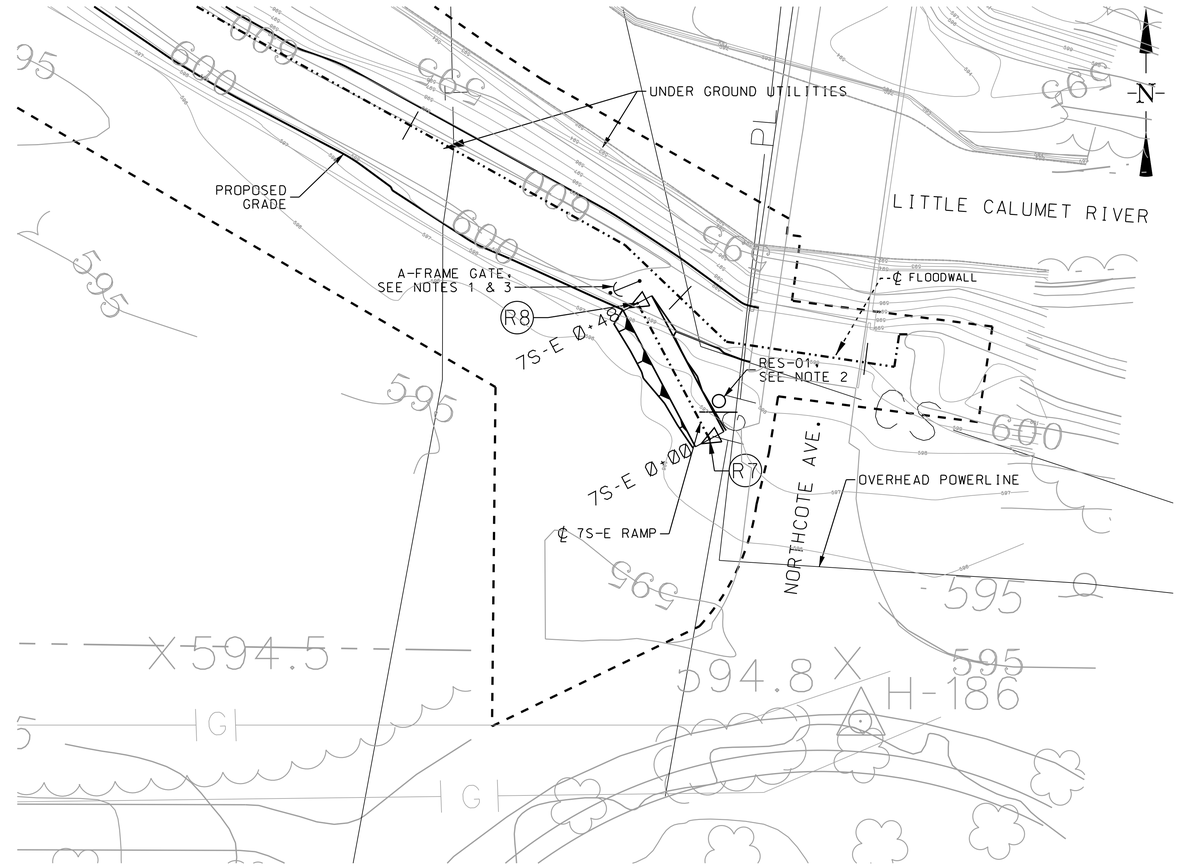

PLAN

20 0 20 40

SCALE IN FEET

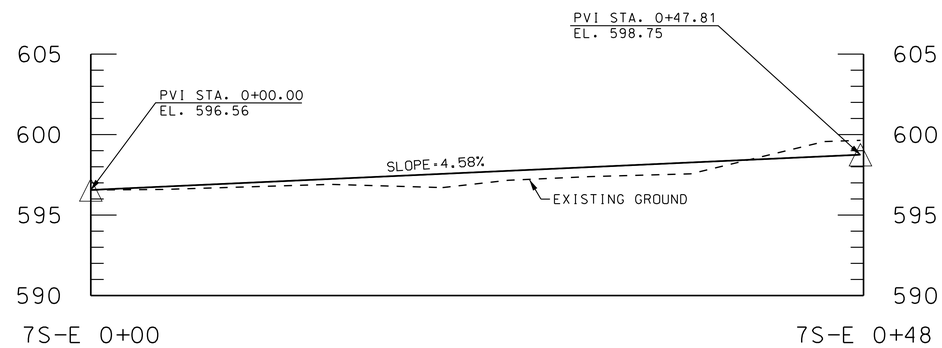

7S-E RAMP PROFILE

4 0 4 8

SCALE IN FEET

7S-E RAMP CENTERLINE COORDINATES				
POINT NAME	DESCRIPTION	NORTHING	EASTING	STATION
R7	POB	1481366.78	389823.37	0+00.00
R8	POE	1481409.02	389800.99	0+47.81

US Army Corps of Engineers
Chicago District

SYMBOL	AMENDMENT DESCRIPTION	DATE	APPROVED	SYMBOL	DESCRIPTION	DATE	APPROVED

DESIGNED BY: MWC
DATE: FEBRUARY 2009
DRAWN BY: JW/DB
SCALE: AS SHOWN
CHECKED BY: JAG
SOLICITATION NUMBER: W912P6-09-B-0002
SUBMITTED BY: JOHN A. GROBOSKI, P.E.
DATE: 7/31/08

U.S. ARMY ENGINEER DISTRICT
CORPS OF ENGINEERS
CHICAGO, ILLINOIS

LITTLE CALUMET RIVER, INDIANA
LOCAL FLOOD PROTECTION
STAGE VII - FLOODWALL

7S-E RAMP
PLAN, SECTIONS AND DETAILS

SHEET REFERENCE NUMBER:
C-29

PLOT DATE: 2/17/2009
FILENAME: C:\Documents and Settings\hbiecnc9\My Documents\PW_Working_Directory_MC\dms17071\LCS7_C-29.dgn

LCS7_C-29.dgn 2/17/2009 9:58:22 AM

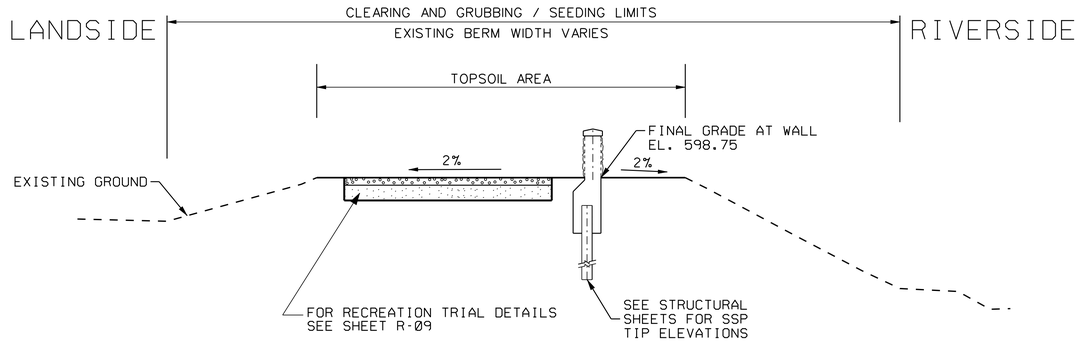

TYPICAL SECTION FOR 7N FLOODWALL

N.T.S.

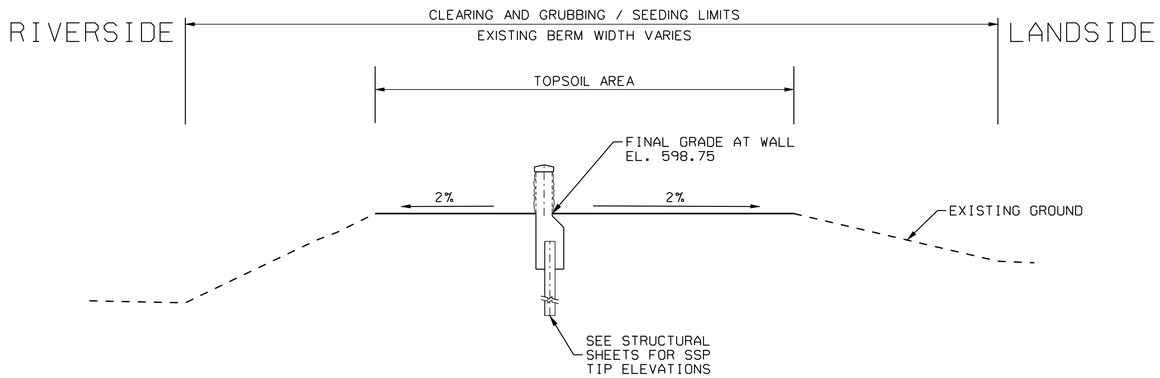

TYPICAL SECTION FOR 7S FLOODWALL

N.T.S.

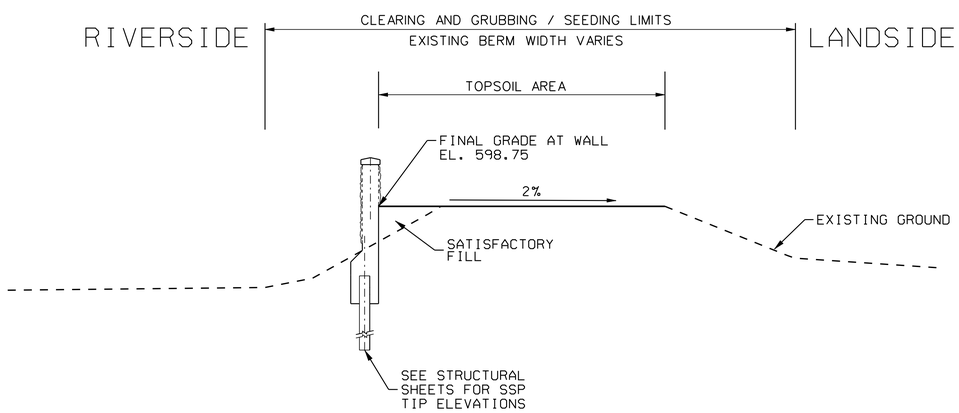

TYPICAL SECTION FOR 7S RETAINING WALL

N.T.S.

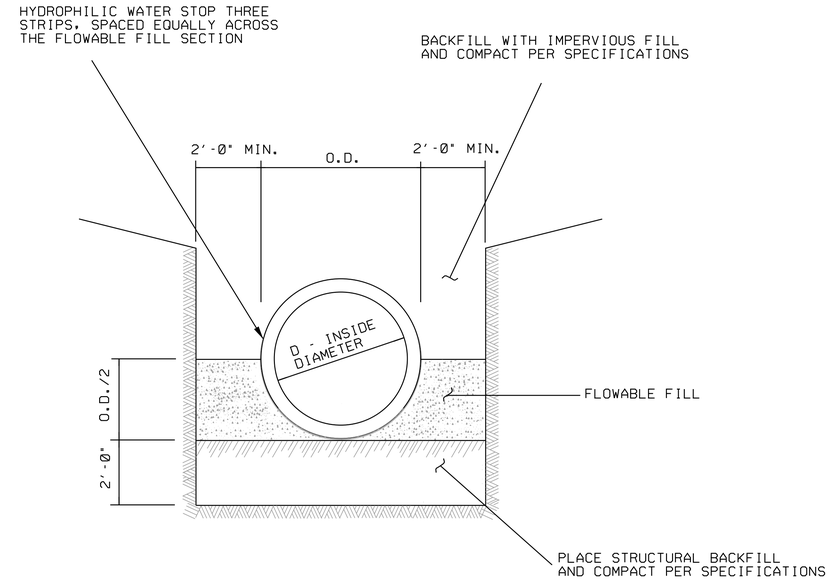

TYPICAL PIPE BEDDING DETAIL

N.T.S.

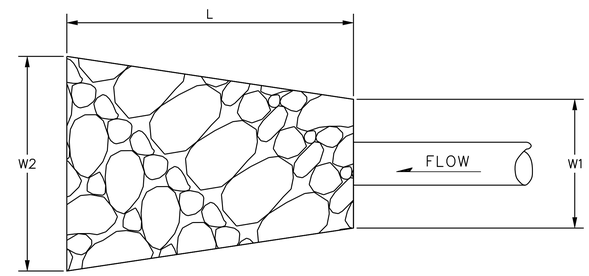

RIRRAP AT OUTFALL DETAIL

N.T.S.

RIPRAP SCHEDULE						
RIPRAP LOCATION	W1	W2	L	RIPRAP DEPTH	BEDDING STONE DEPTH	GEOTEXTILE REQUIRED
COLUMBIA AVE 30" GATEWELL	18.5'	43.5'	25'	18"	6"	YES
WALNUT ST PUMP STATION OUTLET	60'	100'	50'	18"	6"	YES
NORTHCOTE 60" GATED SLUICE	29'	79'	50'	18"	6"	YES

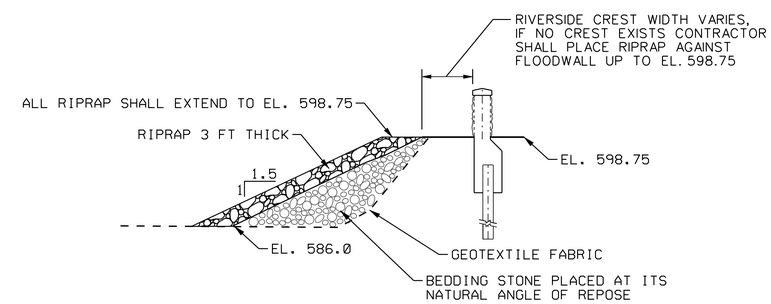

RIPRAP PLACEMENT DETAIL

N.T.S.

RIPRAP SCHEDULE			
7N		7S	
START	END	START	END
7N 6·50	7N 9·50	7S 13·00	7S 20·00
7N 20·00	7N 22·50	7S 28·00	7S 40·00
7N 40·00	7N 43·84		
7N 46·00	7N 48·84		

US Army Corps of Engineers
Chicago District

SYMBOL	AMENDMENT DESCRIPTION	DATE APPROVED	SYMBOL	DESCRIPTION	DATE APPROVED

DESIGNED BY: MWC | DATE: FEBRUARY 2009
DRAWN BY: JW/DB | SCALE: AS SHOWN
CHECKED BY: JAG | SOLICITATION NUMBER: W912P6-09-B-0002
SUBMITTED BY: JOHN A. GROBOSKI, P.E. | DATE: 7/31/08

U.S. ARMY ENGINEER DISTRICT
CORPS OF ENGINEERS
CHICAGO, ILLINOIS

LITTLE CALUMET RIVER, INDIANA
LOCAL FLOOD PROTECTION
STAGE VII - FLOODWALL

TYPICAL SECTIONS AND DETAILS

SHEET REFERENCE NUMBER:
C-30

PLOT DATE: 2/13/2009
FILENAME: C:\workingDB\dms17071\LCS7_C-30.dgn

LCS7_C-30.dgn 2/13/2009 4:27:40 PM

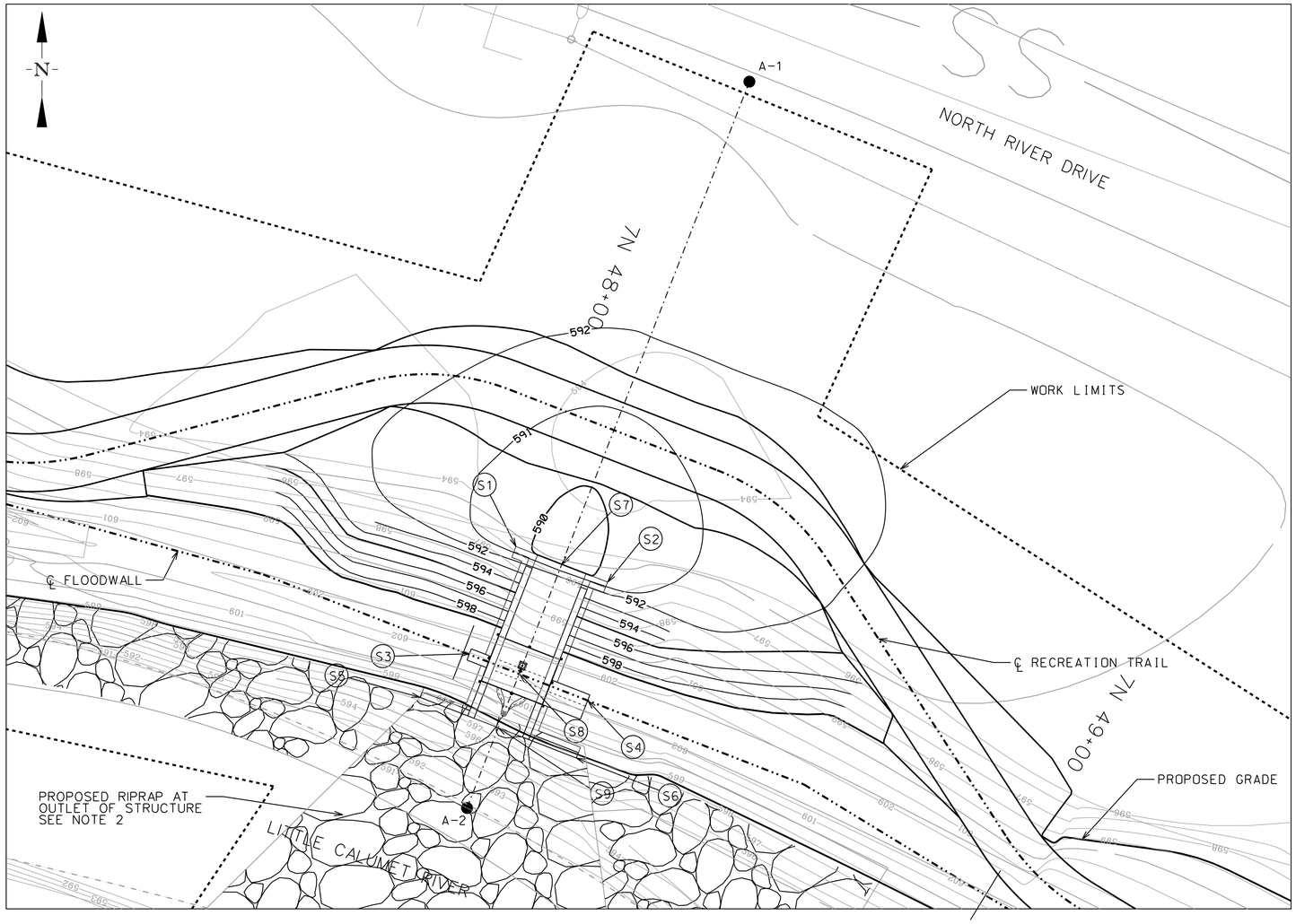

PLAN

10 5 0 10 20
1 INCH = 10 FEET

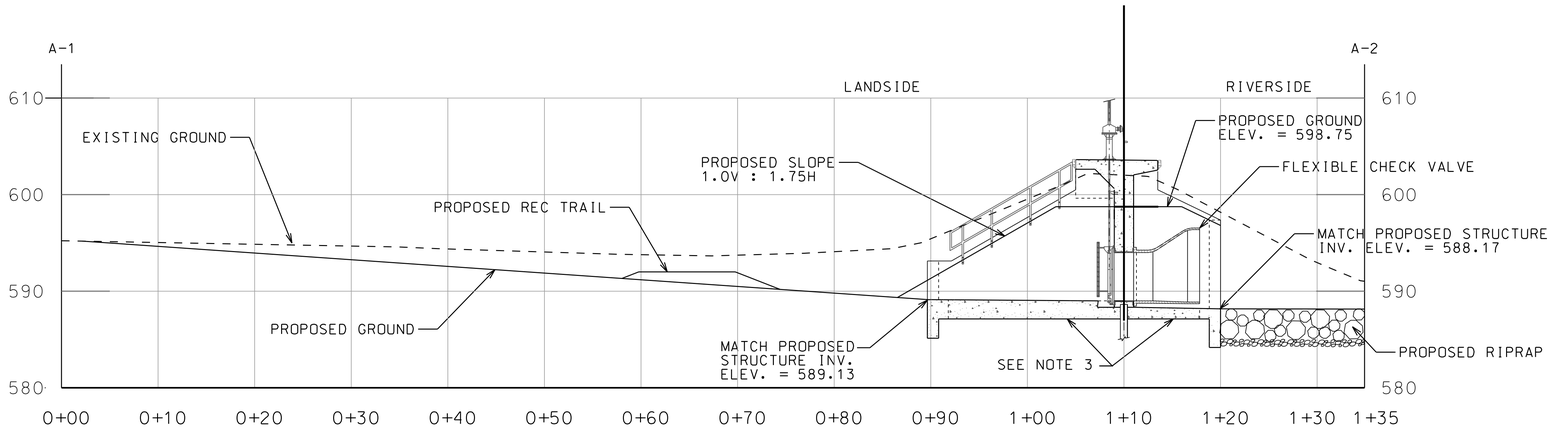

PROFILE ALONG THE PROPOSED 60" GATED SLUICE STRUCTURE

10 5 0 10 20
SCALE IN FEET

PROPOSED STRUCTURE COORDINATES			
POINT	NORTHING	EASTING	DESCRIPTION
S1	1481729.33	389537.69	FAR NW CORNER OF THE STRUCTURE
S2	1481723.18	389553.53	FAR NE CORNER OF THE STRUCTURE
S3	1481710.65	389529.59	INTERSECTION OF ℄ OF SSP & CONTRACTION JOINT
S4	1481702.68	389550.09	INTERSECTION OF ℄ OF SSP & CONTRACTION JOINT
S5	1481703.21	389521.10	FAR SW CORNER OF THE STRUCTURE
S6	1481692.71	389548.13	FAR SE CORNER OF THE STRUCTURE
S7	1481726.26	389545.61	INTERSECTION OF ℄ OF STRUCTURE & EDGE OF APRON
S8	1481707.28	389538.24	INTERSECTION OF ℄ OF SSP AND ℄ OF STRUCTURE
S9	1481697.96	389534.62	INTERSECTION OF ℄ OF STRUCTURE & EDGE OF APRON

NOTES:

1. THE FINAL PROPOSED GRADE CONTOURS AROUND THE STRUCTURE ARE SHOWN IN BOLD.
2. EXCAVATE THE GROUND PRIOR TO PLACEMENT OF THE GEOTEXTILE FABRIC, BEDDING STONE, AND RIPRAP TO THE PROPOSED GRADES SHOWN.
3. THE CONTRACTOR SHALL USE STRUCTURAL BACKFILL IF NECESSARY TO PREPARE SUBGRADE SURFACE FOR CONCRETE PLACEMENT IN ACCORDANCE WITH SPECIFICATION SECTION 31 00 00 EARTHWORK.

US Army Corps of Engineers
Chicago District

SYMBOL	AMENDMENT DESCRIPTION	DATE APPROVED	SYMBOL	DESCRIPTION	DATE APPROVED

DESIGNED BY: MWC
DATE: FEBRUARY 2009
DRAWN BY: JW/OB
SCALE: AS SHOWN
CHECKED BY: JAG
SOLICITATION NUMBER: W912P6-09-B-0002
SUBMITTED BY: JOHN A. GROBOSKI, P.E.
DATE: 7/31/08

U.S. ARMY ENGINEER DISTRICT
CORPS OF ENGINEERS
CHICAGO, ILLINOIS

LITTLE CALUMET RIVER, INDIANA
LOCAL FLOOD PROTECTION
STAGE VII - FLOODWALL

PLAN AND PROFILE
60" GATED SLUICE STRUCTURE

SHEET REFERENCE NUMBER:
C-31
SHEET 40 OF 79

PLOT DATE: 2/17/2009
FILENAME: C:\Documents and Settings\h6lecmc5\My Documents\PW_Working_Directory_MC\dms7071\LCS7_C-31.dgn

LCS7_C-31.dgn 2/17/2009 10:00:55 AM

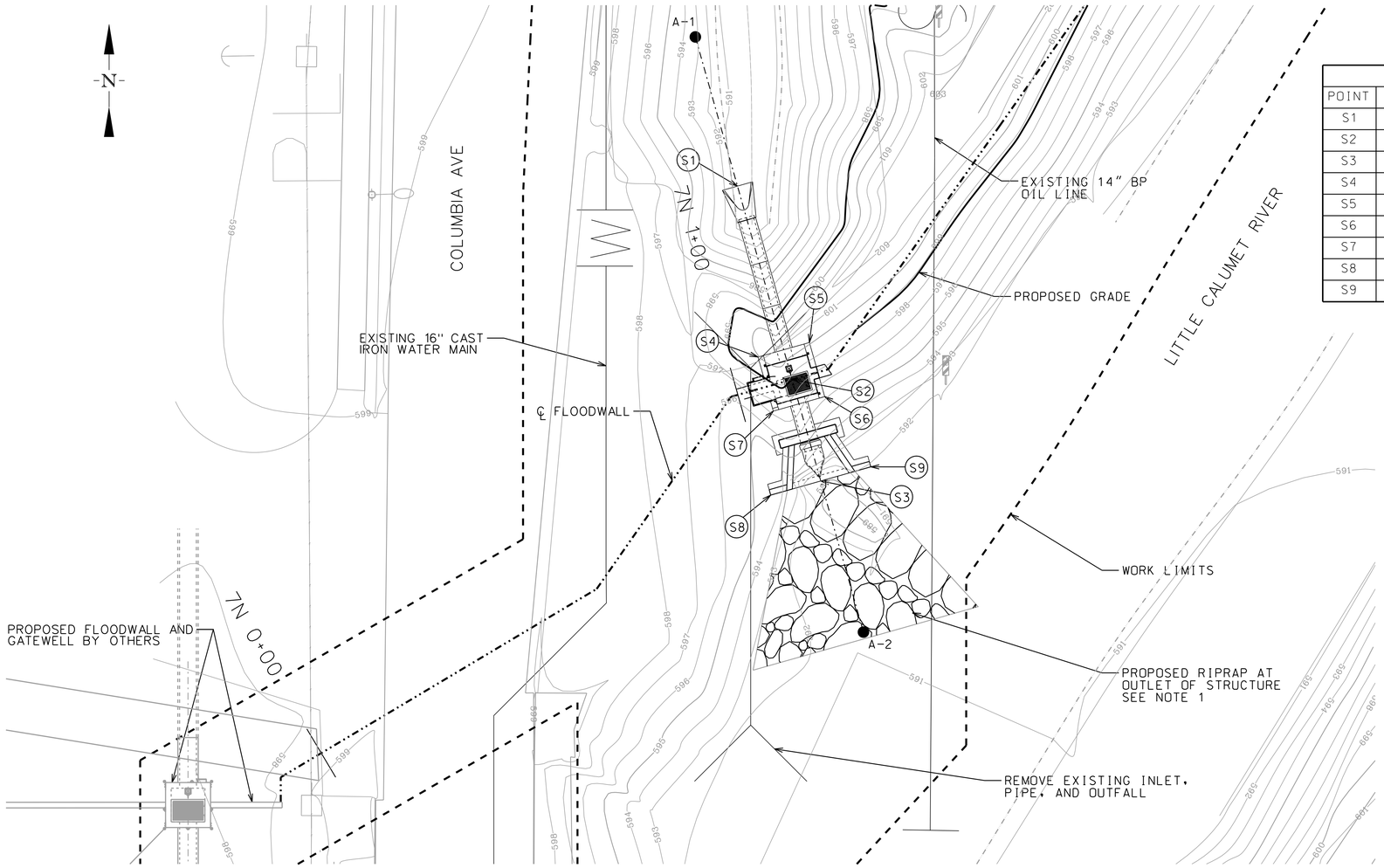

PLAN

PROPOSED STRUCTURE COORDINATES			
POINT	NORTHING	EASTING	DESCRIPTION
S1	1482582.15	385986.98	INTERSECTION OF ℄ OF STRUCTURE & EDGE OF INLET
S2	1482547.74	385996.70	INTERSECTION OF ℄ OF SSP AND ℄ OF STRUCTURE
S3	1482529.70	386001.80	INTERSECTION OF ℄ OF STRUCTURE & EDGE OF APRON
S4	1482551.75	385990.63	FAR NW CORNER OF THE STRUCTURE
S5	1482554.33	385999.78	FAR NE CORNER OF THE STRUCTURE
S6	1482544.71	386002.49	FAR SE CORNER OF THE STRUCTURE
S7	1482542.12	385993.35	FAR SW CORNER OF THE STRUCTURE
S8	1482527.19	385992.89	SW CORNER OF THE HEADWALL
S9	1482532.21	386010.70	SE CORNER OF THE HEADWALL

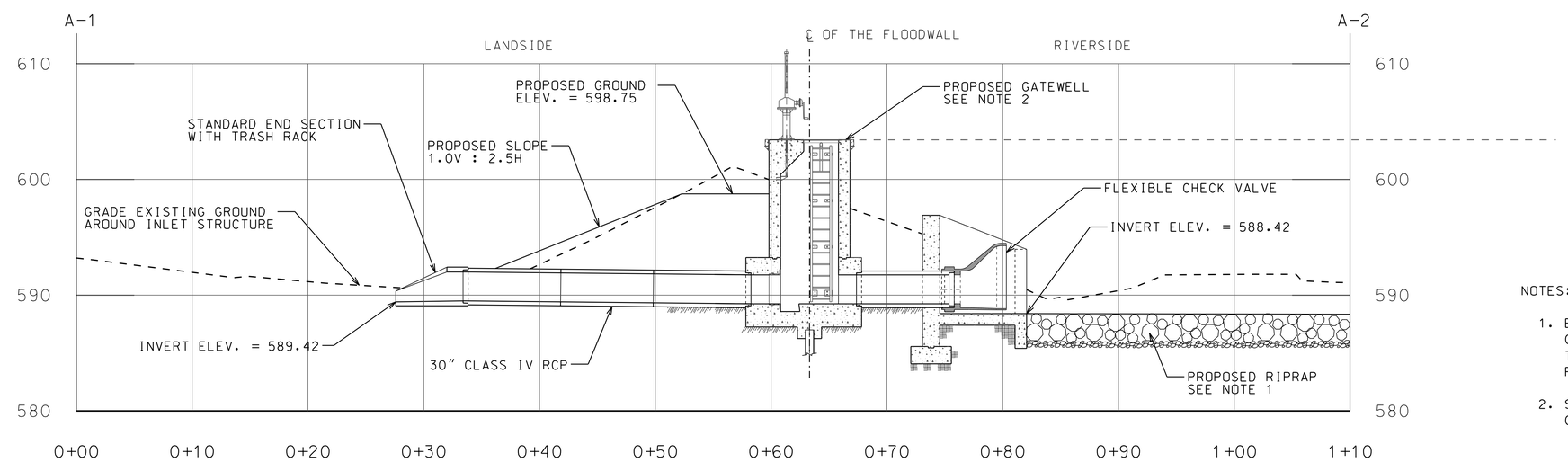

PROFILE ALONG THE PROPOSED 30" GATEWELL STRUCTURE

10 5 0 10 20
SCALE IN FEET

NOTES:

1. EXCAVATE THE GROUND PRIOR TO PLACEMENT OF THE GEOTEXTILE FABRIC, BEDDING STONE, AND RIPRAP TO THE PROPOSED GRADES SHOWN. SEE SHEET C-30 FOR THE RIPRAP DETAILS.
2. SEE SHEET S-01 FOR STRUCTURAL DETAILS OF THE GATEWELL.

US Army Corps of Engineers Chicago District

SYMBOL	AMENDMENT DESCRIPTION	DATE	APPROVED	SYMBOL	DESCRIPTION	DATE	APPROVED

U.S. ARMY ENGINEER DISTRICT
CORPS OF ENGINEERS
CHICAGO, ILLINOIS

DESIGNED BY: MWC | DATE: FEBRUARY 2009
DRAWN BY: JW/DB | SCALE: AS SHOWN
CHECKED BY: JAG | SOLICITATION NUMBER: W912P6-09-B-0002
SUBMITTED BY: JOHN A. GROBOSKI, P.E. | DATE: 7/31/08

LITTLE CALUMET RIVER, INDIANA
LOCAL FLOOD PROTECTION
STAGE VII - FLOODWALL
PLAN AND PROFILE
COLUMBIA AVE 30" GATEWELL

SHEET REFERENCE NUMBER:
C-32
SHEET 41 OF 79

PLOT DATE: 2/17/2009
FILENAME: C:\Documents and Settings\h6tecmc9\My Documents\PW_Working_Directory_MC\dms17071\LCS7_C-32.dgn

LCS7_C-32.dgn 2/17/2009 10:22:59 AM

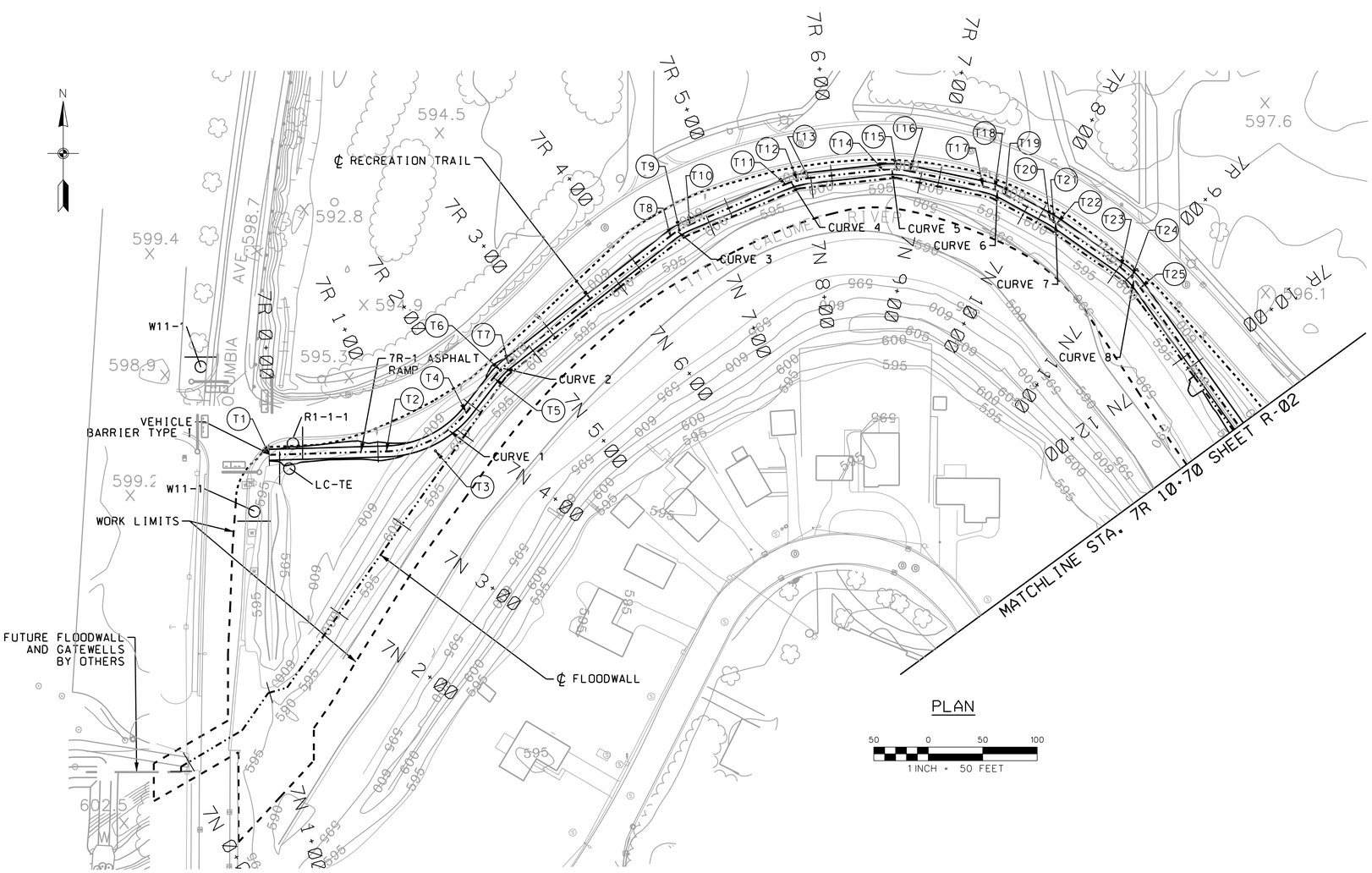

PLAN

50 0 50 100
1 INCH = 50 FEET

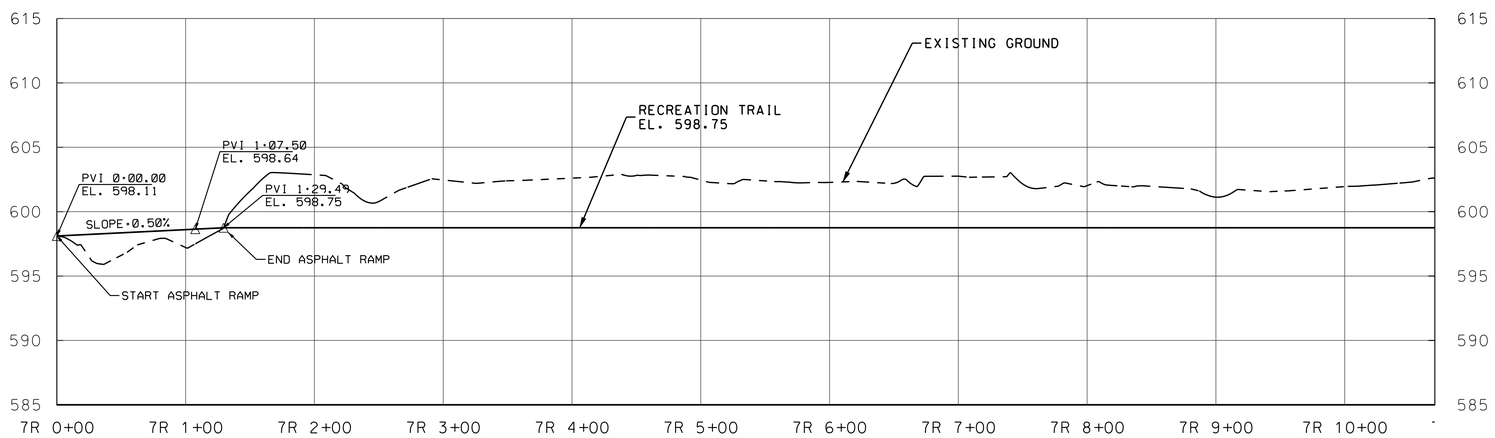

PROFILE 10 VERTICAL TO 1 HORIZONTAL

NOTES:

1. FOR SYMBOLS, ABBREVIATIONS, AND GENERAL NOTES SEE SHEET G-03.
2. FOR RECREATION TRAIL CONTROL DATA, TYPICAL SECTIONS, SIGNS, BARRIERS AND DETAILS, SEE SHEETS R-06 TO R-09.

US Army Corps of Engineers Chicago District

SYMBOL	AMENDMENT DESCRIPTION	DATE	APPROVED	SYMBOL	DESCRIPTION	DATE	APPROVED

DESIGNED BY: MWC
DATE: FEBRUARY 2009
DRAWN BY: JW/DB
SCALE: AS SHOWN
CHECKED BY: JAG
SOLICITATION NUMBER: W912P6-09-B-0002
JOHN A. GROBOSKI, P.E. 7/31/08
SUBMITTED BY:
DATE:

U.S. ARMY ENGINEER DISTRICT
CORPS OF ENGINEERS
CHICAGO, ILLINOIS

LITTLE CALUMET RIVER, INDIANA
LOCAL FLOOD PROTECTION
STAGE VII - FLOODWALL

RECREATION TRAIL
PLAN AND PROFILE
STA. 7R 0+00 TO 7R 10+70

SHEET REFERENCE NUMBER:
R-01

SHEET 42 OF 79

PLOT DATE: 2/17/2009
FILENAME: C:\Documents and Settings\h6tecmc9\My Documents\PW_Working_Directory_MC\dms17071\LCS7_R-01.dgn

LCS7_R-01.dgn 2/17/2009 10:43:02 AM

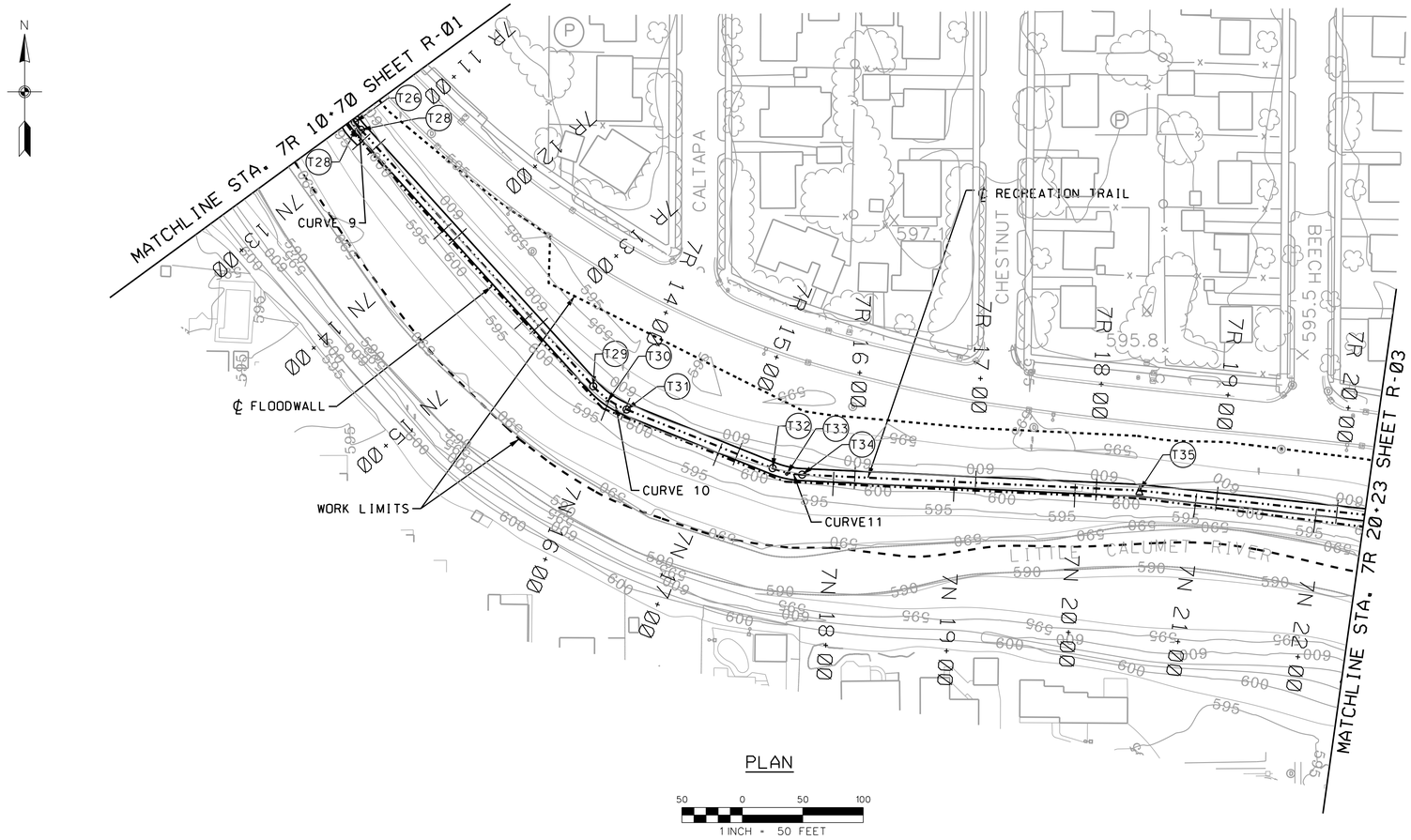

PLAN

50 0 50 100

1 INCH = 50 FEET

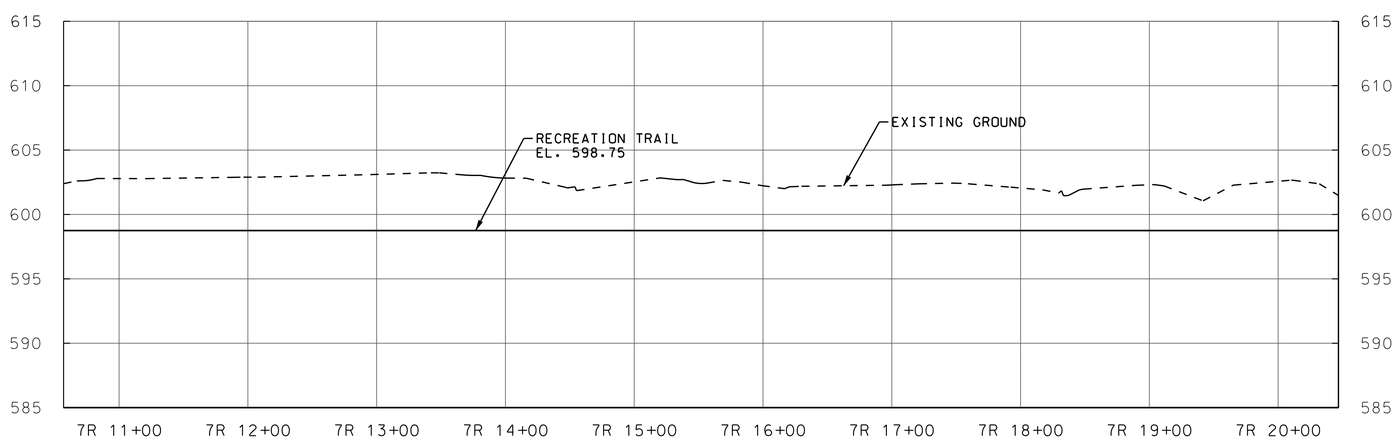

PROFILE 10 VERTICAL TO 1 HORIZONTAL

NOTES:

1. FOR SYMBOLS, ABBREVIATIONS, AND GENERAL NOTES SEE SHEET G-03.
2. FOR RECREATION TRAIL CONTROL DATA, TYPICAL SECTIONS, SIGNS, BARRIERS AND DETAILS, SEE SHEETS R-06 TO R-09.

US Army Corps of Engineers
Chicago District

SYMBOL	AMENDMENT DESCRIPTION	DATE APPROVED	SYMBOL	DESCRIPTION	DATE APPROVED

DESIGNED BY: MWC
DATE: FEBRUARY 2009
DRAWN BY: JW/DB
SCALE: AS SHOWN
CHECKED BY: JAG
SOLICITATION NUMBER: W912P6-09-B-0002
SUBMITTED BY: JOHN A. GROBOSKI, P.E.
DATE: 7/31/08

U.S. ARMY ENGINEER DISTRICT
CORPS OF ENGINEERS
CHICAGO, ILLINOIS

LITTLE CALUMET RIVER, INDIANA
LOCAL FLOOD PROTECTION
STAGE VII - FLOODWALL
RECREATION TRAIL
PLAN AND PROFILE
STA. 7R 10+70 TO 7R 20+23

SHEET REFERENCE NUMBER:
R-02
SHEET 43 OF 79

PLOT DATE: 2/17/2009
FILENAME: C:\Documents and Settings\t6lecmc3\My Documents\PW_Working_Directory_MC\dms17071\LCS7_R-02.dgn

LCS7_R-02.dgn 2/17/2009 10:46:02 AM

NOTES:

1. FOR SYMBOLS, ABBREVIATIONS, AND GENERAL NOTES SEE SHEET G-03.

2. FOR RECREATION TRAIL CONTROL DATA, TYPICAL SECTIONS, SIGNS, BARRIERS AND DETAILS, SEE SHEETS R-06 TO R-09.

3. THE CONTRACTOR SHALL MINIMIZE GRADING OF THE EXISTING BERM AROUND THE WALNUT ST. PUMP STATION FROM STA. 7R 22+00 TO STA. 7R 24+00. GRADING SHALL BE LIMITED TO ONLY WHAT IS NECESSARY TO BUILD THE RECREATION TRAIL.

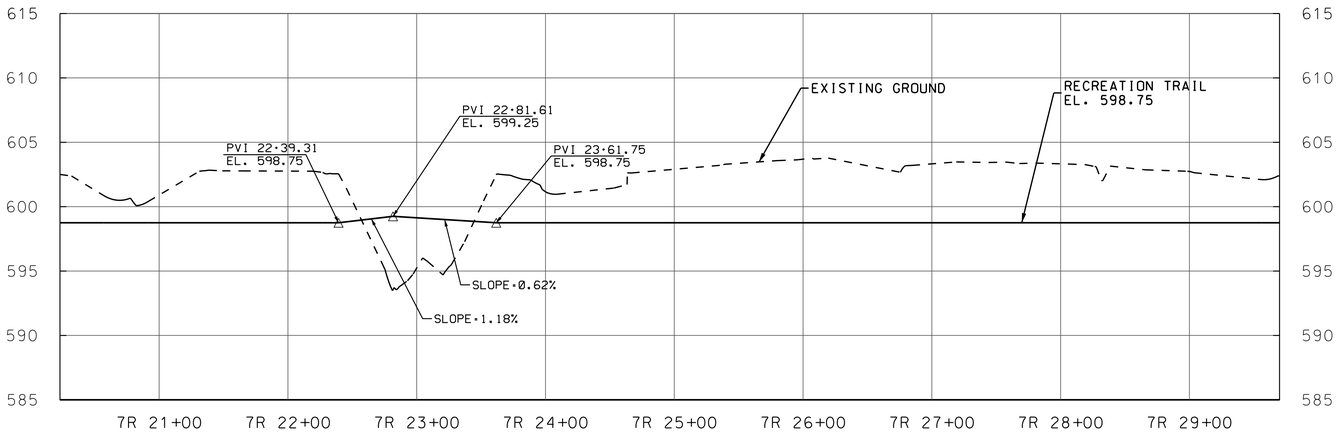

PROFILE 10 VERTICAL TO 1 HORIZONTAL

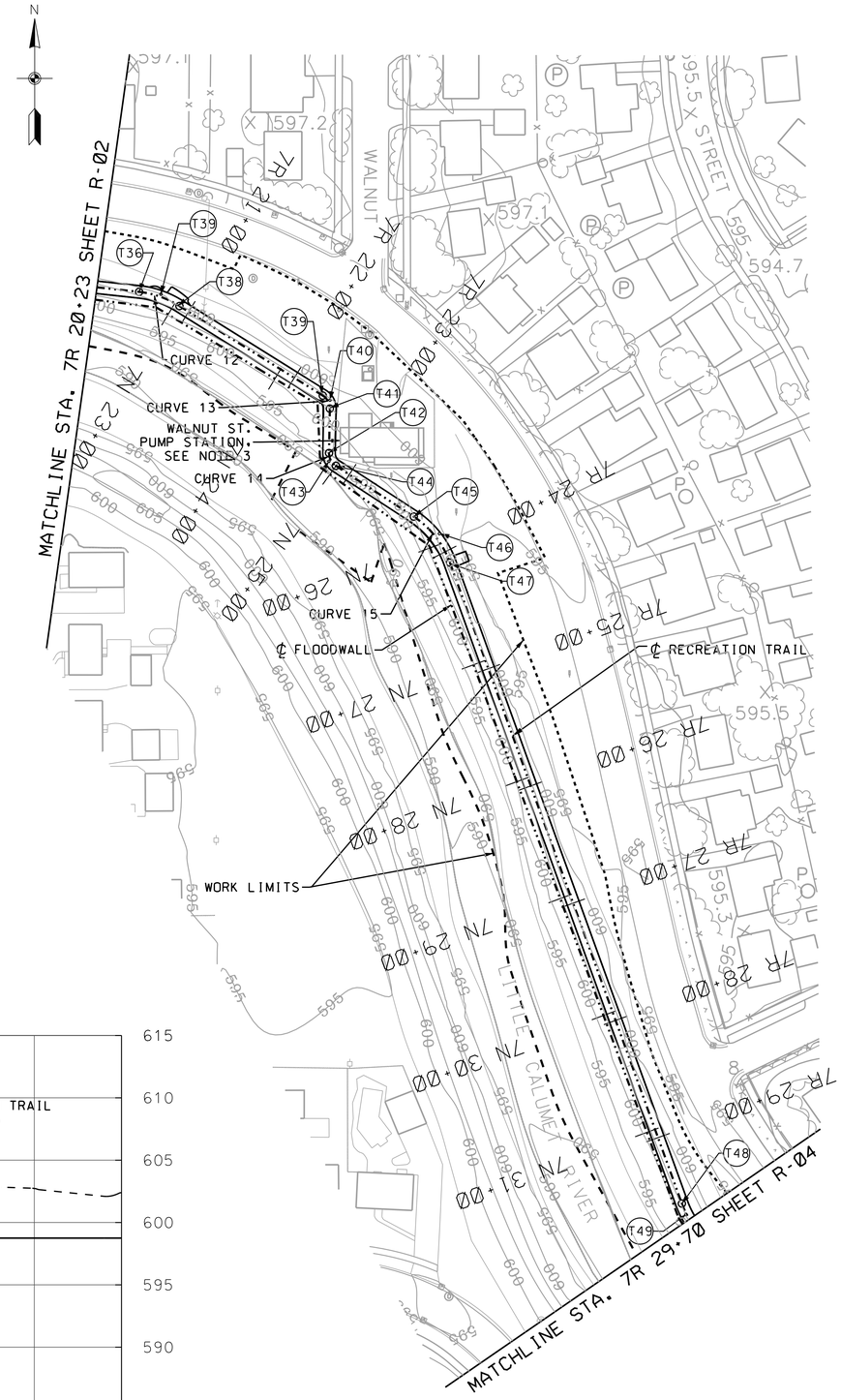

PLAN

50 0 50 100
1 INCH = 50 FEET

US Army Corps of Engineers
Chicago District

SYMBOL	AMENDMENT DESCRIPTION	DATE APPROVED	SYMBOL	DESCRIPTION	DATE APPROVED

DESIGNED BY: MWC
DATE: FEBRUARY 2009
DRAWN BY: JW/DB
SCALE: AS SHOWN
CHECKED BY: JAG
SOLICITATION NUMBER: W912P6-09-B-0002
SUBMITTED BY: JOHN A. GROBOSKI, P.E.
DATE: 7/31/08

U.S. ARMY ENGINEER DISTRICT
CORPS OF ENGINEERS
CHICAGO, ILLINOIS

LITTLE CALUMET RIVER, INDIANA
LOCAL FLOOD PROTECTION
STAGE VII - FLOODWALL

RECREATION TRAIL
PLAN AND PROFILE
STA. 7R 20+23 TO 7R 29+70

SHEET REFERENCE NUMBER:
R-03
SHEET 44 OF 79

PLOT DATE: 2/17/2009
FILENAME: C:\Documents and Settings\k6lecmc9\My Documents\PW_Working_Directory_MC\dms17071\LCS7_R-03.dgn

LCS7_R-03.dgn 2/17/2009 1:41:42 PM

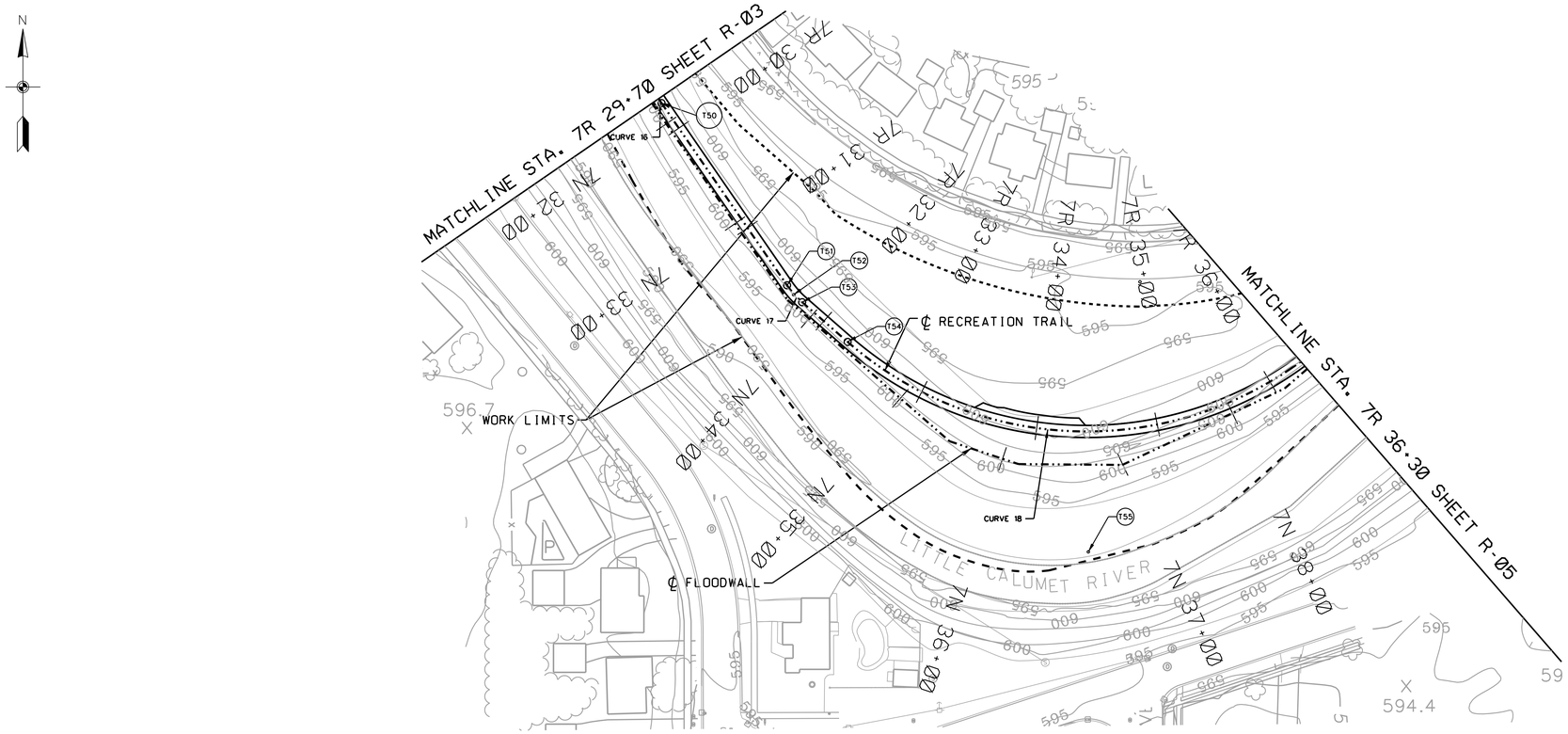

PLAN

50 0 50 100

1 INCH = 50 FEET

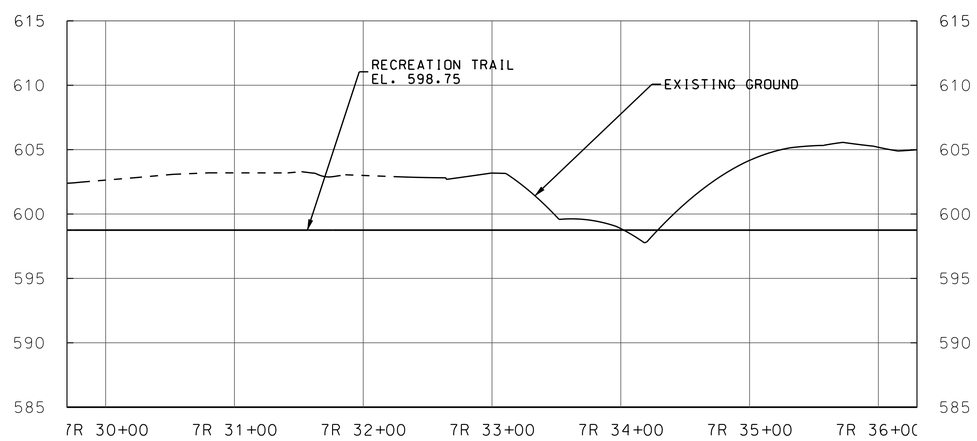

PROFILE 10 VERTICAL TO 1 HORIZONTAL

NOTES:

1. FOR SYMBOLS, ABBREVIATIONS, AND GENERAL NOTES SEE SHEET G-03.
2. FOR RECREATION TRAIL CONTROL DATA, TYPICAL SECTIONS, SIGNS, BARRIERS AND DETAILS, SEE SHEETS R-06 TO R-09.

US Army Corps of Engineers
Chicago District

SYMBOL	AMENDMENT DESCRIPTION	DATE APPROVED	SYMBOL	DESCRIPTION	DATE APPROVED

DESIGNED BY: MWC
DATE: FEBRUARY 2009
DRAWN BY: JW/DB
SCALE: AS SHOWN
CHECKED BY: JAG
SOLICITATION NUMBER: W912P6-09-B-0002
SUBMITTED BY: JOHN A. GROBOSKI, P.E.
DATE: 7/31/08

U.S. ARMY ENGINEER DISTRICT
CORPS OF ENGINEERS
CHICAGO, ILLINOIS

LITTLE CALUMET RIVER, INDIANA
LOCAL FLOOD PROTECTION
STAGE VII - FLOODWALL

RECREATION TRAIL
PLAN AND PROFILE
STA. 7R 29+70 TO 7R 36+30

SHEET REFERENCE NUMBER:
R-04

PLOT DATE: 2/17/2009
FILENAME: C:\Documents and Settings\h16ecmc3\My Documents\PW_Working_Directory_MC\dms17071\LCS7_R-04.dgn

LCS7_R-04.dgn 2/17/2009 10:49:12 AM

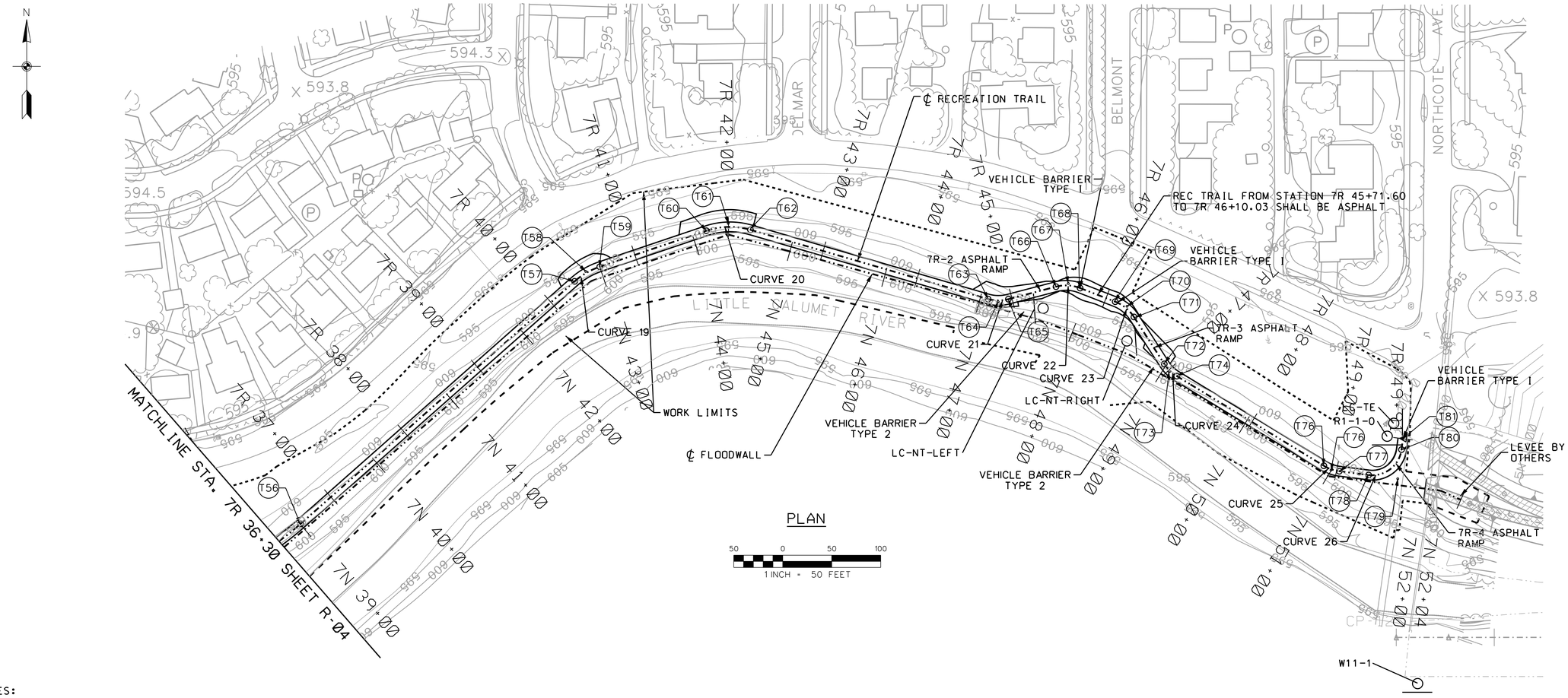

PLAN

1 INCH = 50 FEET

NOTES:

1. FOR SYMBOLS, ABBREVIATIONS, AND GENERAL NOTES SEE SHEET G-03.
2. FOR RECREATION TRAIL CONTROL DATA, TYPICAL SECTIONS, SIGNS, BARRIERS AND DETAILS, SEE SHEETS R-06 TO R-09.

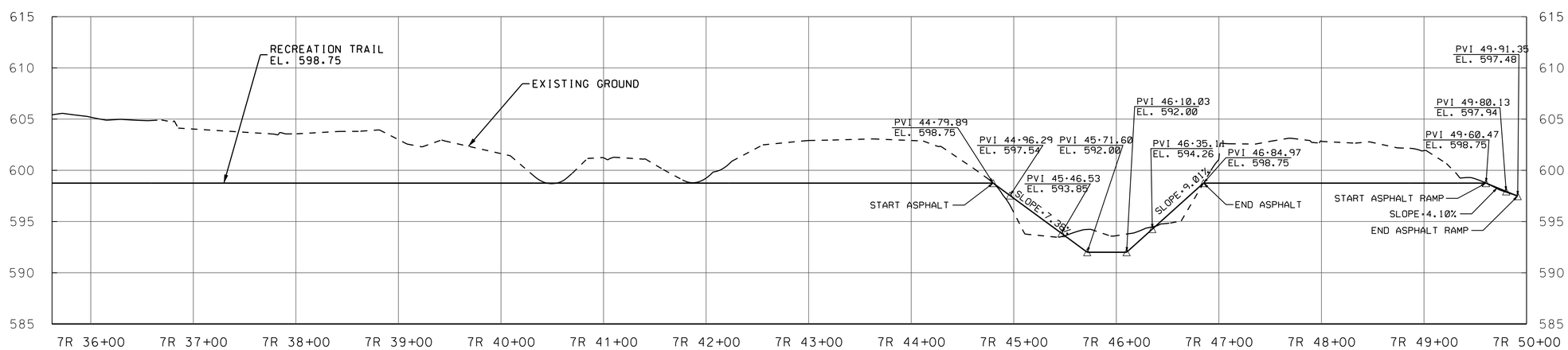

PROFILE 10 VERTICAL TO 1 HORIZONTAL

US Army Corps of Engineers Chicago District

SYMBOL	AMENDMENT DESCRIPTION	DATE	APPROVED	SYMBOL	DESCRIPTION	DATE	APPROVED

DESIGNED BY: MWC
DATE: FEBRUARY 2009
DRAWN BY: JW/DB
SCALE: AS SHOWN
CHECKED BY: JAG
SOLICITATION NUMBER: W912P6-09-B-0002
SUBMITTED BY: JOHN A. GROBOSKI, P.E.
DATE: 7/31/08

U.S. ARMY ENGINEER DISTRICT
CORPS OF ENGINEERS
CHICAGO, ILLINOIS

LITTLE CALUMET RIVER, INDIANA
LOCAL FLOOD PROTECTION
STAGE VII - FLOODWALL

RECREATION TRAIL
PLAN AND PROFILE
STA. 7R 36+30 TO 7R 49+91

SHEET REFERENCE NUMBER:
R-05

SHEET 46 OF 79

PLOT DATE: 2/17/2009
FILENAME: C:\Documents and Settings\h6tecmc9\My Documents\PW_Working_Directory_MC\dms17071\LCS7_R-05.dgn

LCS7_R-05.dgn 2/17/2009 10:50:44 AM

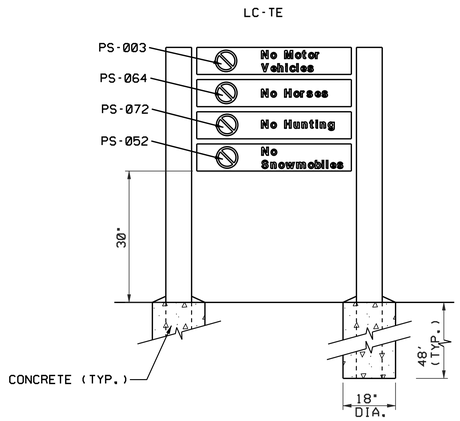

TRAIL ENTRANCE

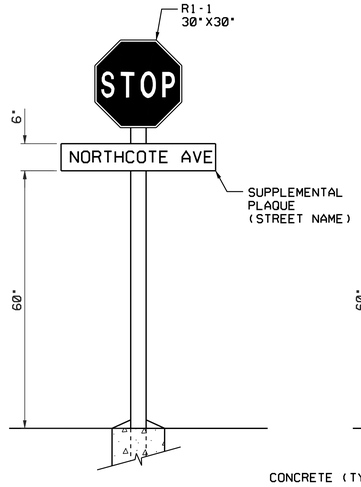

TRAIL STOP SIGN WITH STREET NAME

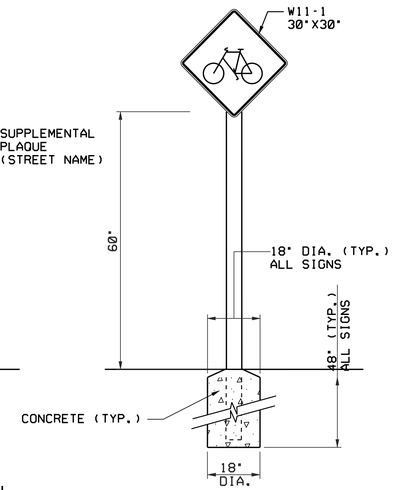

MOTORIST WARNING SIGN

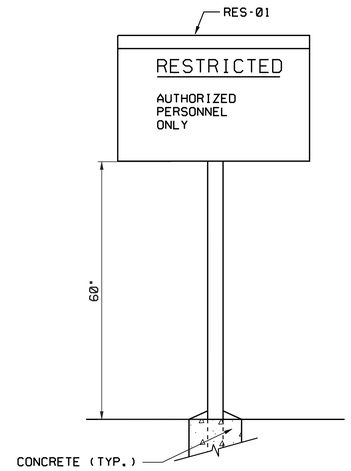

RESTRICTION SIGN

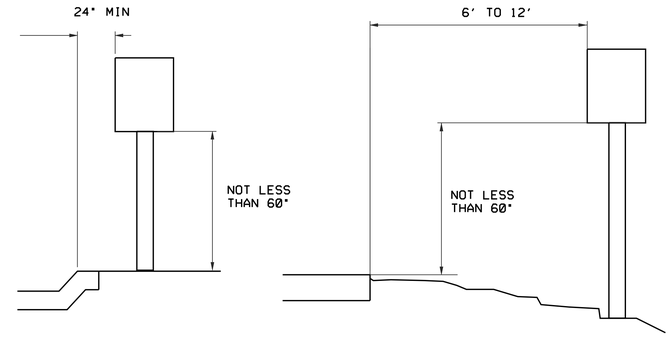

MOTORIST WARNING SIGN PLACEMENT

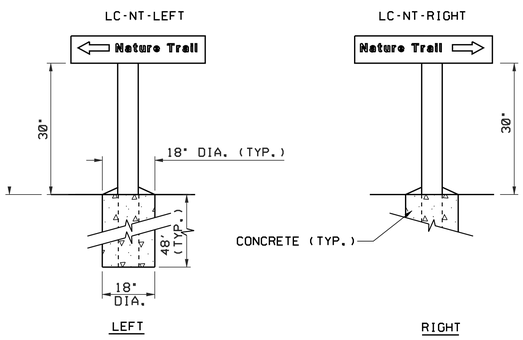

TRAIL DIRECTION SIGNS

SIGN SYMBOL SHEETS R-01 TO R-05

RES-01

SIGN TYPE	LEGEND SIZE (A)	PANEL SIZE	POST SIZE	SPECIFICATION CODE	MOUNTING HEIGHT	COLOR BKG/LGD
RES-01	.75"	11.875" X 11.875"	4" X 4"	HDO-5/HDO-6/ ALU-5/ALU-6	36"-60"	RED/WHITE

SIGN ID	DESCRIPTION	STREET NAME	QUANTITY
R1-1-0	STOP - STREET NAME	NORTHCOTE AVE.	1
R1-1-1	STOP - STREET NAME	COLUMBIA AVE.	1
W11-1	BIKE CROSSING	--	3
RES-01	RESTRICTED	--	2
LC-TE	LC - TRAIL ENTRANCE	--	2
LC-NT-LEFT	LC - NATURE TRAIL LEFT	--	1
LC-NT-RIGHT	LC - NATURE TRAIL RIGHT	--	1

SCHEDULE OF SIGNS

NOTES:

1. SIGNS SHALL CONFORM TO THE MANUAL ON UNIFORM TRAFFIC CONTROL DEVICES, LATEST EDITION OR THE CORPS SIGN STANDARDS, EP 310-1-6A.

2. EP 310-1-6A IS CURRENTLY AVAILABLE ON THE WEB:

HTTP://CORPSLAKES.USACE.ARMY.MIL/EMPLOYEES/SIGN/MANUAL.HTML

THE FOLLOWING SECTIONS CONTAIN REFERENCES TO THE SIGNS LISTED ON THIS SHEET:

VOLUME 1: SECTION 9 - TRAFFIC SIGNS
VOLUME 1: SECTION 6 - DIRECTIONAL SIGNS
VOLUME 1: SECTION 7 - RECREATION SYMBOL SIGNS

3. APPROXIMATE LOCATION OF SIGNS IS IDENTIFIED ON SHEETS R-01 TO R-05. IF THE SIGN IS ON THE FLOODWALL EMBANKMENT OR ACCESS RAMP, IT SHALL BE PLACED AT THE EDGE OF THE CREST, SO AS NOT TO INTEFER WITH THE TRAVEL WAY.

4. THE CONTRACTOR SHALL PAINT, FLAG, OR STAKE LOCATIONS OF SIGNS FOR FINAL APPROVAL OF THE COR. ONCE THE LOCATIONS HAVE BEEN APPROVED THE SIGNS SHALL BE PLACED.

US Army Corps of Engineers
Chicago District

SYMBOL	AMENDMENT DESCRIPTION	DATE APPROVED	SYMBOL	DESCRIPTION	DATE APPROVED

DESIGNED BY: MWC
DATE: FEBRUARY 2009
DRAWN BY: JW/DB
SCALE: AS SHOWN
CHECKED BY: JAG
SOLICITATION NUMBER: W912P6-09-B-0002
SUBMITTED BY: JOHN A. GROBOSKI, P.E.
DATE: 7/31/08

U.S. ARMY ENGINEER DISTRICT
CORPS OF ENGINEERS
CHICAGO, ILLINOIS

LITTLE CALUMET RIVER, INDIANA
LOCAL FLOOD PROTECTION
STAGE VII - FLOODWALL

RECREATION TRAIL SIGNS

SHEET REFERENCE NUMBER:
R-06
SHEET 47 OF 79

PLOT DATE: 2/17/2009
FILENAME: C:\Documents and Settings\h5ecmc9\My Documents\PW_Working_Directory_MC\dms17071\LCS7_R-06.dgn

LCS7_R-06.dgn 2/17/2009 9:51:40 AM

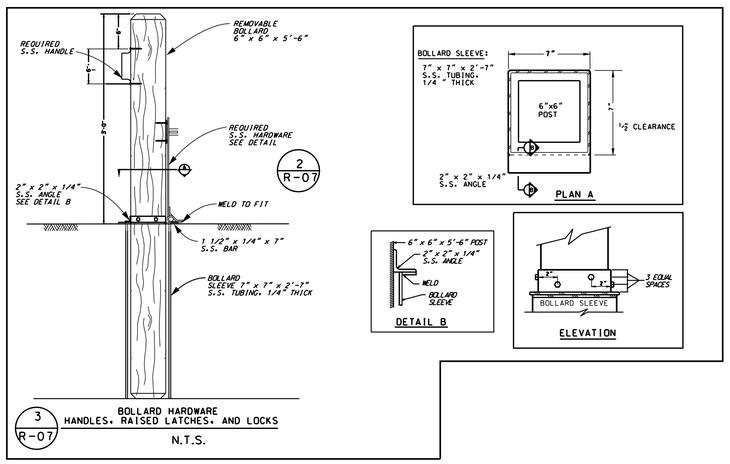

3 R-07 BOLLARD HARDWARE HANDLES, RAISED LATCHES, AND LOCKS

N.T.S.

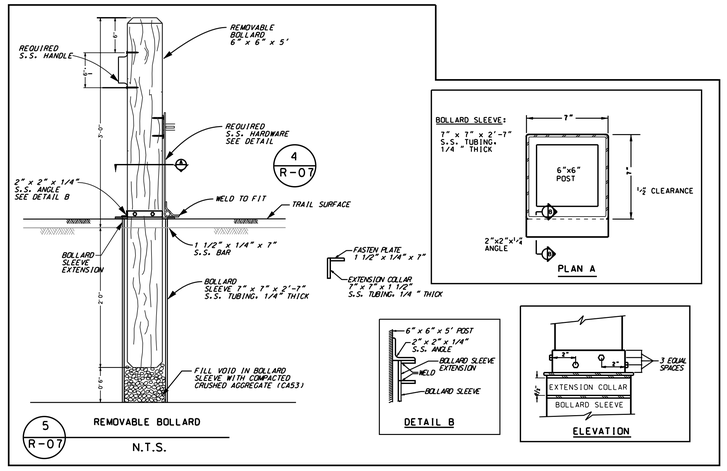

5 R-07 REMOVABLE BOLLARD

N.T.S.

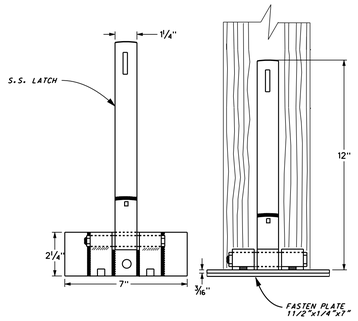

6 R-07 BOLLARDS WITH HANDLES, RAISED LATCHES, AND LOCKS

N.T.S.

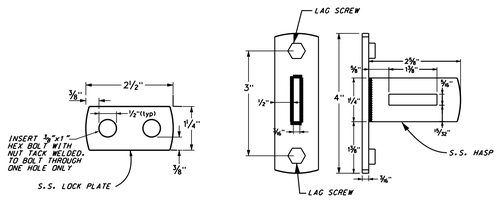

7 R-07 LATCHES AND LOCKS

N.T.S.

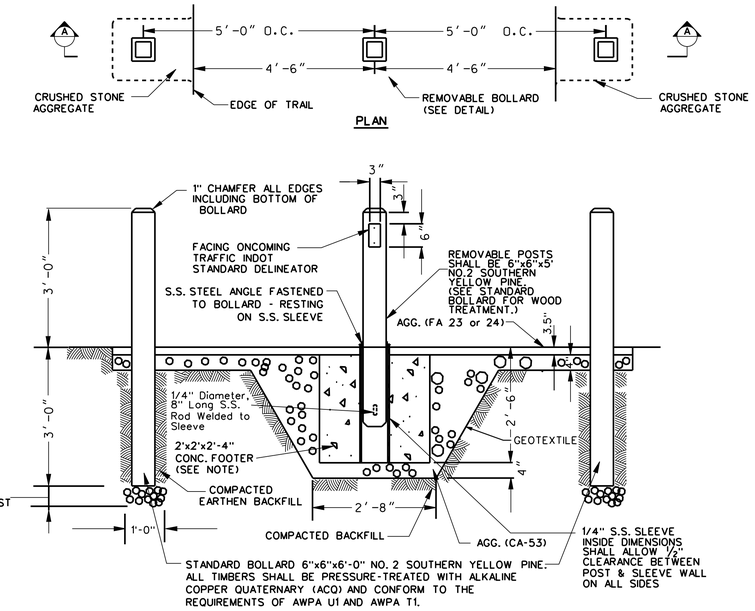

1 R-07 VEHICLE BARRIER TYPE 1 DETAILS

N.T.S.

UNLESS OTHERWISE NOTED ON SHEETS R-01 TO R-05. THERE SHALL BE THREE BOLLARDS AT THE SPACING SHOWN IN DETAIL ONE.

VEHICLE BARRIER NOTES:

1. THE CONTRACTOR SHALL PLACE AND COMPACT THE AGGREGATE BACKFILL IN 6" LIFTS AND TAKE CARE TO PLUMB EACH POST.
2. FOR SIGN AND VEHICLE BARRIER LOCATIONS, SEE SHEETS R-01 TO R-05.
3. SIGN FOUNDATIONS SHALL BE CAST-IN-PLACE PORTLAND CEMENT CONCRETE.
4. SIGNS SHALL CONFORM TO THE REQUIREMENTS OF THE U.S. ARMY CORPS OF ENGINEERS SIGN STANDARDS MANUAL: EP 310-1-6 (a & b).
5. SIGN POSTS SHALL BE PRESSURE-TREATED SOUTHERN YELLOW PINE NO.2. PRESSURE-TREATMENT SHALL BE WITH ALKALINE COPPER QUATERNARY (ACQ) AND CONFORM TO THE REQUIREMENTS OF AWPA U1 AND AWPA T1. 0.40 PCF INTENDED FOR GROUND CONTACT AND FRESH WATER USE. BRUSH COAT AREAS THAT ARE CUT OR DRILLED AFTER TREATMENT WITH EITHER THE SAME PRESERVATIVE USED IN THE TREATMENT OR WITH A 2 PERCENT COPPER NAPHTHENATE SOLUTION. ALL SIGN POSTS SHALL BE EMBEDDED A MINIMUM OF 4' IN THE CONCRETE FOUNDATION.
6. HDO- SIGN PANELS SHALL BE 0.75" THICK UNLESS OTHERWISE INDICATED.
7. HDO- AND ALU- SIGN PANELS SHALL HAVE 1" RADIUS ROUNDED CORNERS.
8. SIGN ABBREVIATIONS AS DEFINED IN THE MANUAL ON UNIFORM TRAFFIC CONTROL DEVICES (MUTCD) AND THE U.S. ARMY CORPS OF ENGINEERS SIGN STANDARD MANUAL.
9. THE CONTRACTOR SHALL PAINT, FLAG, OR STAKE THE LOCATIONS OF VEHICLE BARRIERS FOR FINAL APPROVAL OF THE COR. ONCE THE LOCATIONS HAVE BEEN APPROVED THE VEHICLE BARRIERS SHALL BE PLACED.
10. VEHICLE BARRIERS MINIMUM OF 20' TO 25' FROM EDGE OF STREET PAVEMENT.
11. LIME STONE SCREENING SHALL BE PLACED AT LOOSE THICKNESS OF 1" BEFORE COMPACTION.

HARDWARE NOTES:

1. ALL ITEMS SHALL BE INSTALLED AT THE LOCATIONS SHOWN. ALL ITEMS SHALL BE TYPE 304 STAINLESS STEEL UNLESS OTHERWISE NOTED.

2. FIT: WELDING TO OR ON STAINLESS STEEL SHALL BE IN ACCORDANCE WITH AWS D1.6. ALL FASTENERS SHALL BE TYPE 304 STAINLESS STEEL. MATERIALS AND PARTS NECESSARY TO COMPLETE EACH ITEM, EVEN THOUGH SUCH WORK IS NOT DEFINITELY SHOWN OR SPECIFIED, SHALL BE INCLUDED. POOR MATCHING OF HOLES FOR FASTENERS SHALL BE CAUSE FOR REJECTION. FASTENERS SHALL BE CONCEALED WHERE PRACTICAL.

3. WORKMANSHIP: DRILLING AND PUNCHING SHALL PRODUCE CLEAN TRUE LINES AND SURFACES. WELDING SHALL BE CONTINUOUS ALONG THE ENTIRE AREA OF CONTACT EXCEPT WHERE TACK WELDING IS PERMITTED. EXPOSED CONNECTIONS OF WORK IN PLACE SHALL NOT BE TACK WELDED. EXPOSED WELDS SHALL BE GROUND SMOOTH. EXPOSED SURFACES OF WORK IN PLACE SHALL HAVE A SMOOTH FINISH, AND UNLESS OTHERWISE APPROVED, EXPOSED RIVETING SHALL BE FLUSH. WHERE TIGHT FITS ARE REQUIRED, JOINTS SHALL BE MILLED. CORNER JOINTS SHALL BE MITERED, WELL FORMED, AND IN TRUE ALIGNMENT. INSTALLATION SHALL BE IN ACCORDANCE WITH MANUFACTURER'S INSTALLATION INSTRUCTIONS AND APPROVED DRAWINGS, CUTS, AND DETAILS.

VEHICLE BARRIER SCHEDULE:

VEHICLE BARRIERS	QUANTITY
VEHICLE BARRIER TYPE 1	4
VEHICLE BARRIER TYPE 2	2
A-FRAME GATE	2

SEE SHEET R-08 FOR A-FRAME GATE DETAILS

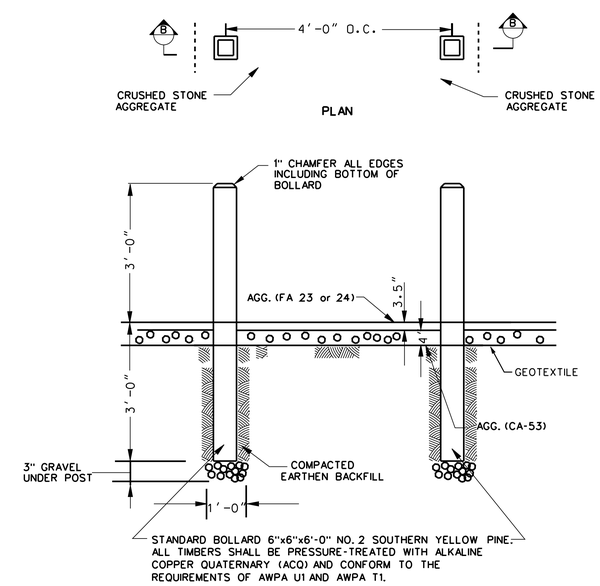

8 R-09 VEHICLE BARRIER TYPE 2 DETAILS

N.T.S.

UNLESS OTHERWISE NOTED ON SHEETS R-01 TO R-05. THERE SHALL BE TWO BOLLARDS AT THE SPACING SHOWN IN DETAIL EIGHT. WHEN MORE THAN TWO BOLLARDS ARE SPECIFIED ON THE DRAWINGS, THE LOCATION AND SPACING SHALL BE DETERMINED BY THE COR.

US Army Corps of Engineers
Chicago District

SYMBOL	AMENDMENT DESCRIPTION	DATE APPROVED SYMBOL	DESCRIPTION	DATE APPROVED

DESIGNED BY: MWC
DATE: FEBRUARY 2009
DRAWN BY: JW/OB
SCALE: AS SHOWN
CHECKED BY: JAG
SOLICITATION NUMBER: W912P6-09-B-0002
SUBMITTED BY: JOHN A. GROBOSKI, P.E.
DATE: 7/31/08

U.S. ARMY ENGINEER DISTRICT
CORPS OF ENGINEERS
CHICAGO, ILLINOIS

LITTLE CALUMET RIVER, INDIANA
LOCAL FLOOD PROTECTION
STAGE VII - FLOODWALL

VEHICLE BARRIER DETAILS

SHEET REFERENCE NUMBER:
R-07
SHEET 48 OF 79

PLOT DATE: 2/17/2009
FILENAME: C:\Documents and Settings\h6lecmc9\My Documents\PW_Working_Directory_MC\dms17071\LCS7_R-07.dgn

LCS7_R-07.dgn 2/17/2009 9:50:05 AM

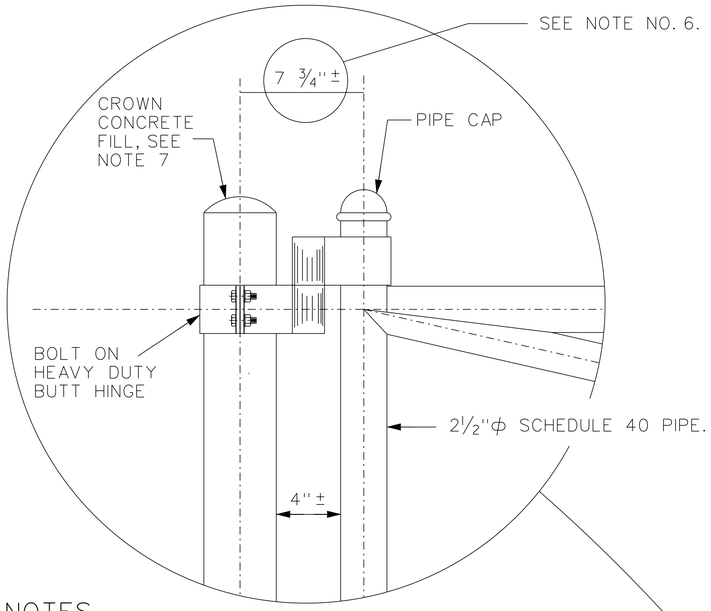

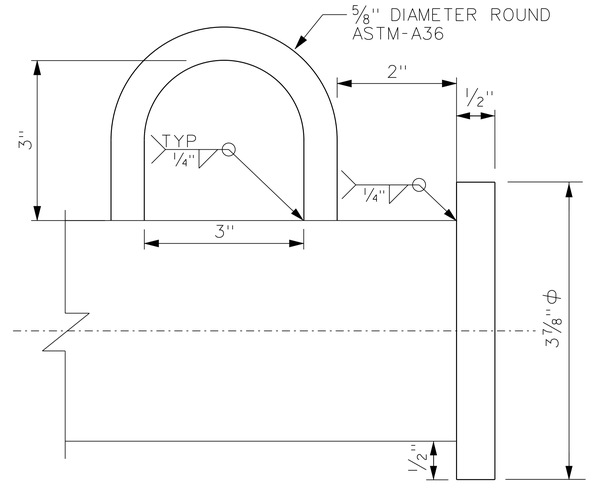

1 / R-08

HASP DETAIL

N.T.S.

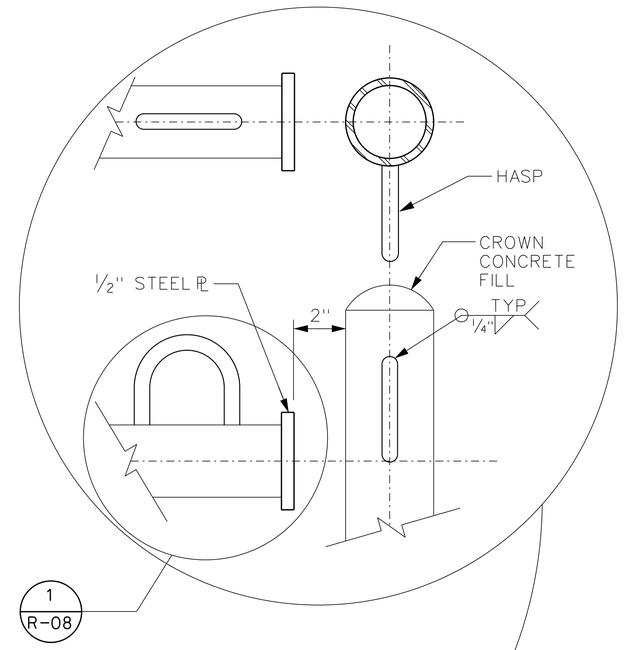

1 / R-08

NOTES

1. DRILL WEEP HOLES IN THE BOTTOM OF THE PIPES BEFORE THE GATE IS HOT DIPPED GALVANIZED.
2. SEE SPECIFICATIONS FOR FABRICATION REQUIREMENTS.
3. ALL PIPE SHALL CONFORM TO ASTM A53.
4. ALL STEEL PLATE SHALL CONFORM TO ASTM A36.
5. DIMENSION WILL VARY DEPENDING ON THE DIMENSION OF THE BUTT HINGE.
6. FIELD WELDING IS NOT PERMITTED.
7. THE EXPOSED SURFACE OF THE CONCRETE SHALL BE CROWNED TO SHED WATER.
8. ALL BOLTS SHALL BE PEENED.
9. SUPPLY EACH GATE WITH 2 - CHAINS 33" LONG 1/2" GRADE 30 PROOF COIL ZINC PLATED.

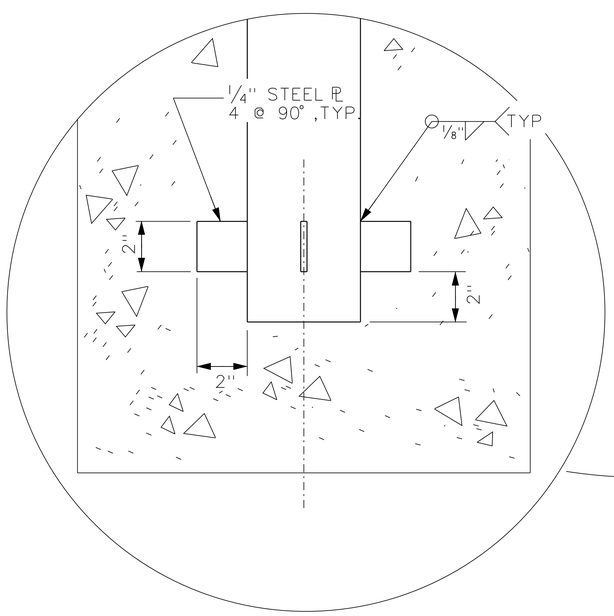

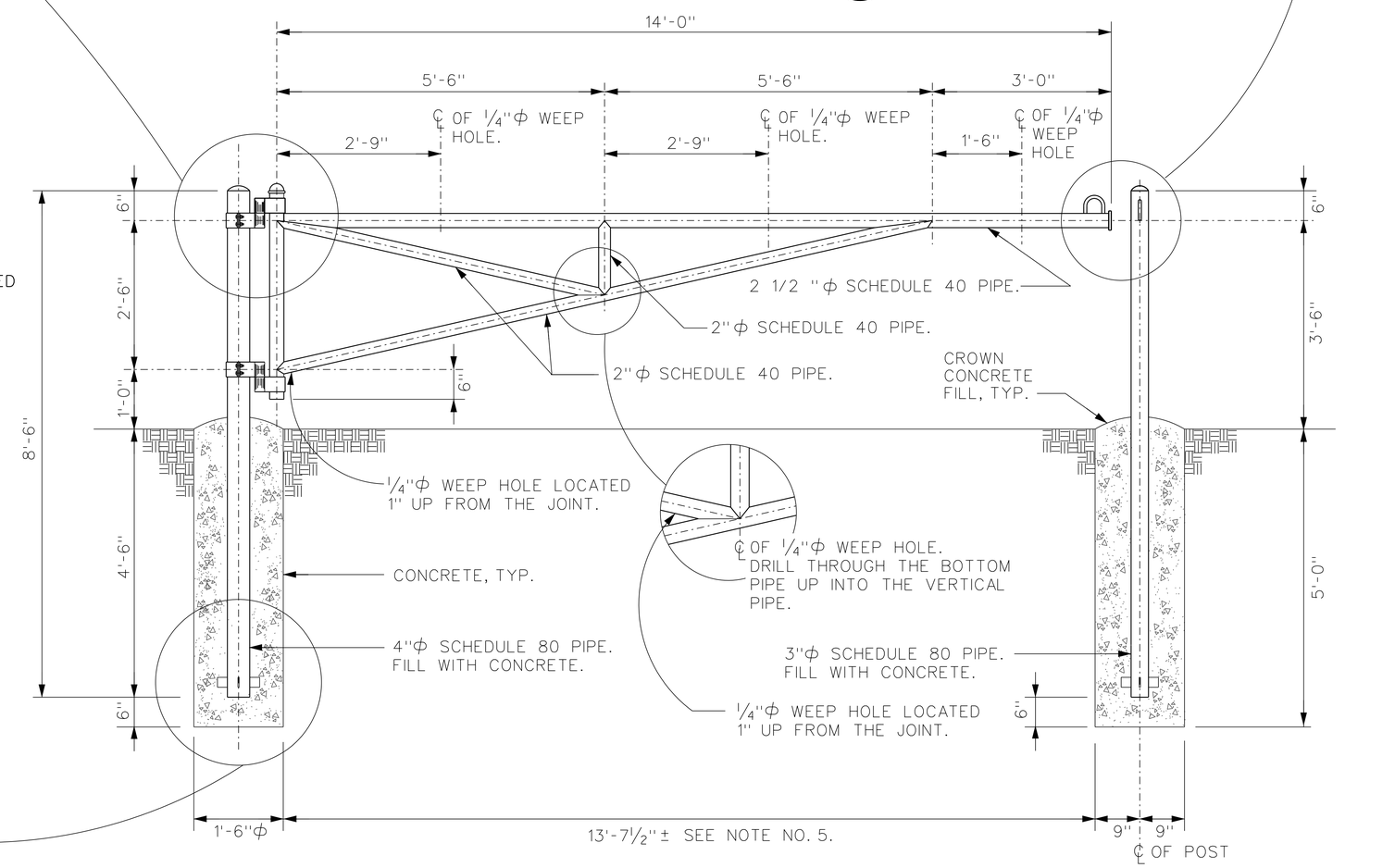

2 / R-08

A-FRAME GATE ELEVATION

SCALE: 1"=1'-0"

12" 0" 1' 2' 3' 4'

SCALE: 1" = 1'-0"

US Army Corps of Engineers Chicago District

SYMBOL	AMENDMENT DESCRIPTION	DATE APPROVED	SYMBOL	DESCRIPTION	DATE APPROVED

DESIGNED BY: MWC | DATE: FEBRUARY 2009
DRAWN BY: JW/DB | SCALE: AS SHOWN
CHECKED BY: JAG | SOLICITATION NUMBER: W912P6-09-B-0002
SUBMITTED BY: JOHN A. GROBOSKI, P.E. | DATE: 7/31/08

U.S. ARMY ENGINEER DISTRICT
CORPS OF ENGINEERS
CHICAGO, ILLINOIS

LITTLE CALUMET RIVER, INDIANA
LOCAL FLOOD PROTECTION
STAGE VII - FLOODWALL

A-FRAME GATE
ELEVATION AND DETAILS

SHEET REFERENCE NUMBER:
R-08

PLOT DATE: 2/13/2009
FILENAME: C:\working\DB\dms17071\CS7_R-08.dgn

LCS7_R-08.dgn 2/13/2009 3:41:34 PM

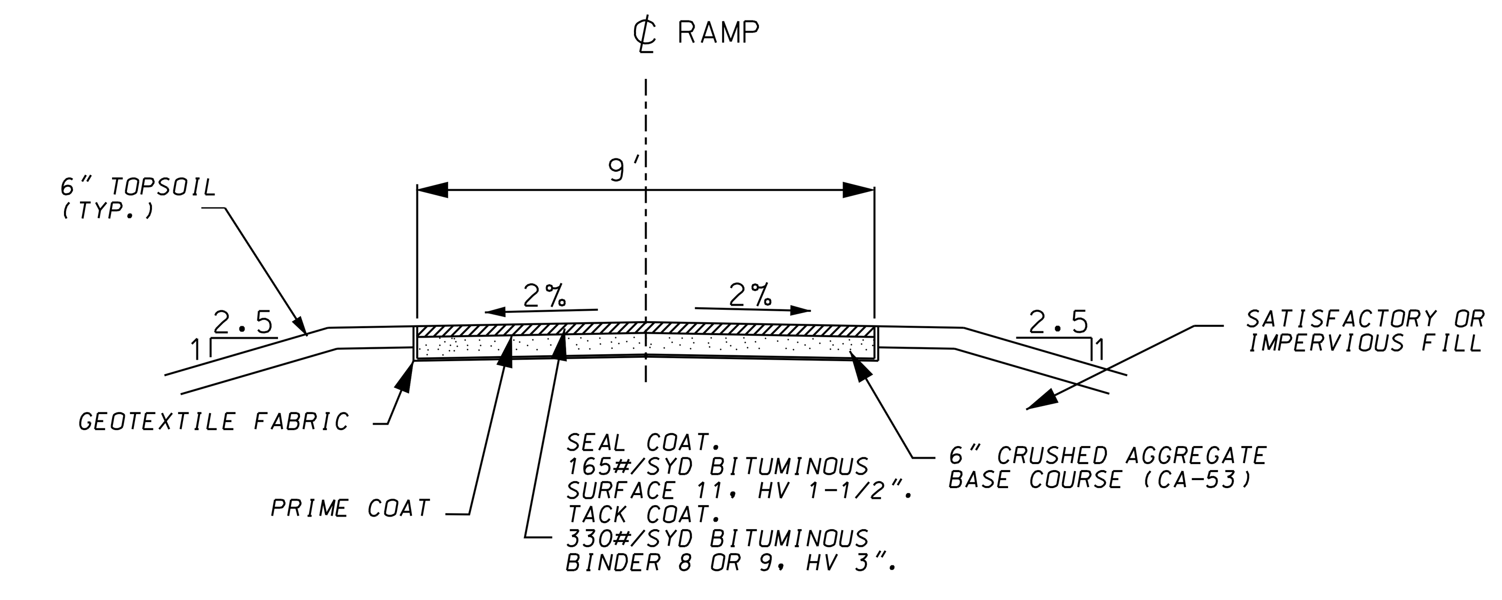

TYPICAL SECTION FOR ACCESS RAMPS WITH ASPHALT SURFACE

1 / R-09

N.T.S.

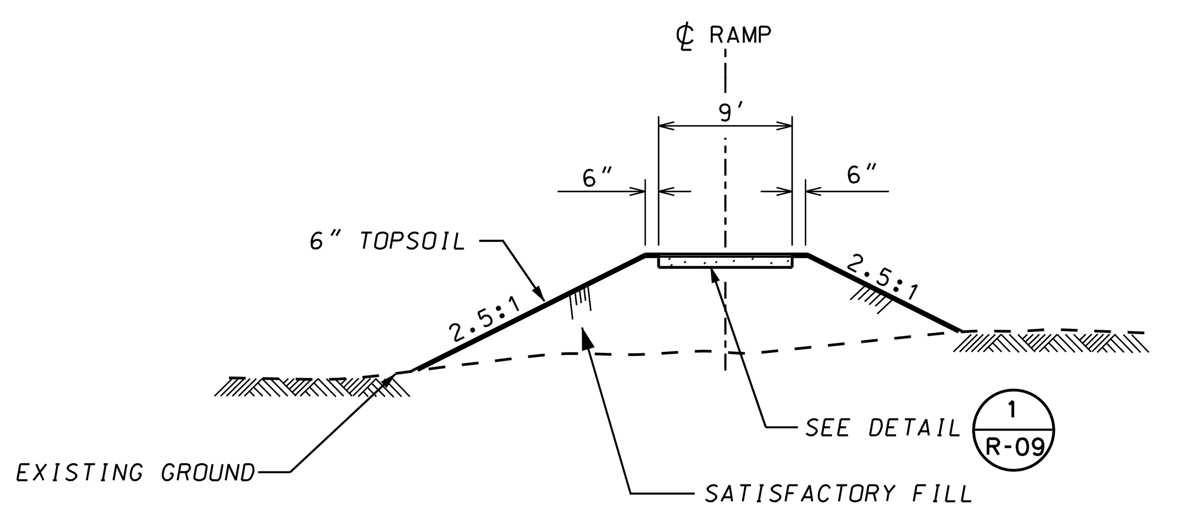

2 / R-09

TYPICAL SECTION FOR ASPHALT RAMPS

N.T.S.

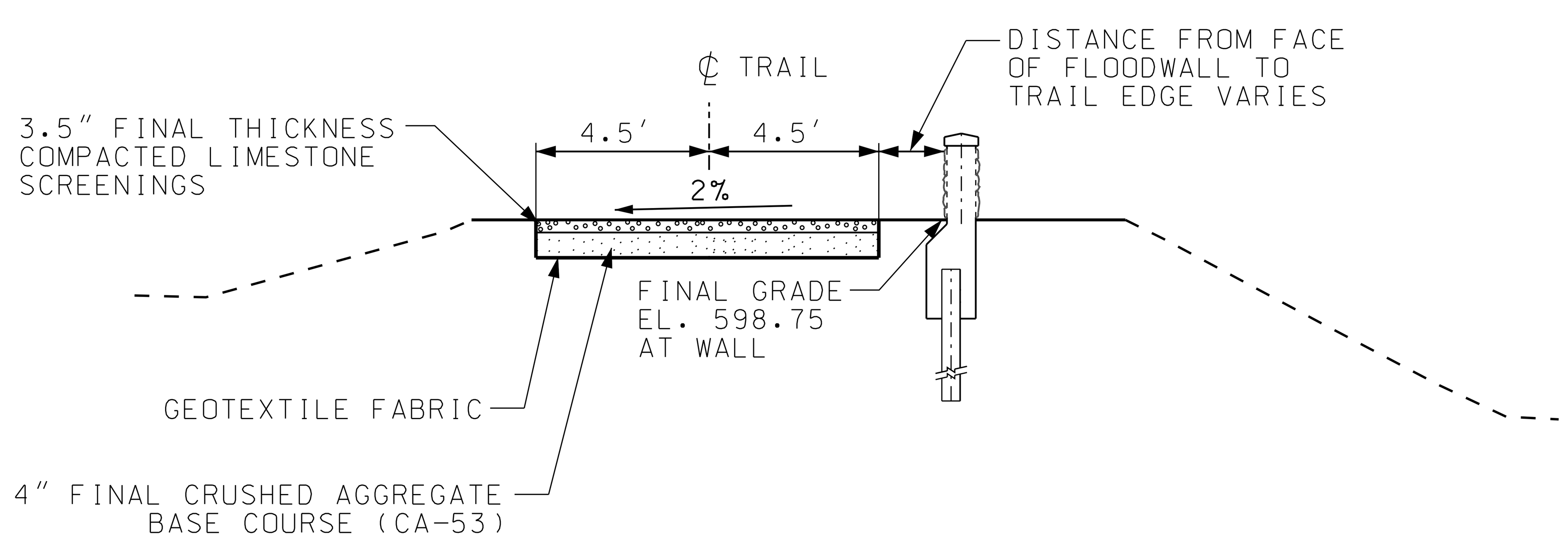

3 / R-09

TYPICAL SECTION RECREATION TRAIL

N.T.S.

RECREATION TRAIL CURVE DATA

POINT NAME	POINT TYPE	NORTHING	EASTING
CURVE 1			
T2	PC	1482766.44	386094.06
T3	PI	1482767.74	386138.76
T4	PT	1482801.93	386167.59
RADIUS =	100.00'		
LENGTH =	84.11'		
DELTA =	48°11'33" LEFT		
TANGENT=	44.72'		
CURVE 2			
T5	PC	1482834.32	386192.81
T6	PI	1482841.60	386198.48
T7	PT	1482847.28	386205.73
RADIUS =	75.00'		
LENGTH =	18.35'		
DELTA =	14°00'55" RIGHT		
TANGENT=	9.22'		
CURVE 3			
T8	PC	1482963.97	386354.65
T9	PI	1482970.46	386362.77
T10	PT	1482974.50	386372.35
RADIUS =	75.00'		
LENGTH =	20.67'		
DELTA =	15°47'17" RIGHT		
TANGENT=	10.40'		
CURVE 4			
T11	PC	1483011.87	386460.94
T12	PI	1483016.08	386470.92
T13	PT	1483017.30	386481.69
RADIUS =	75.00'		
LENGTH =	21.53'		
DELTA =	16°26'44" RIGHT		
TANGENT=	10.84'		
CURVE 5			
T14	PC	1483025.02	386550.30
T15	PI	1483026.37	386562.30
T16	PT	1483023.89	386574.12
RADIUS =	75.00'		
LENGTH =	23.95'		
DELTA =	18°17'54" RIGHT		
TANGENT=	12.08'		
CURVE 6			
T17	PC	1483009.70	386641.60
T18	PI	1483007.45	386652.29
T19	PT	1483002.25	386661.90
RADIUS =	75.00'		
LENGTH =	21.70'		
DELTA =	16°34'51" RIGHT		
TANGENT=	10.93'		
CURVE 7			
T20	PC	1482980.06	386702.85
T21	PI	1482978.04	386706.57
T22	PT	1482975.61	386710.05
RADIUS =	75.00'		
LENGTH =	8.47'		
DELTA =	6°28'14" RIGHT		
TANGENT=	4.24'		
CURVE 8			
T23	PC	1482935.31	386767.77
T24	PI	1482927.89	386778.39
T25	PT	1482917.35	386785.90
RADIUS =	75.00'		
LENGTH =	25.65'		
DELTA =	19°35'38" RIGHT		
TANGENT=	12.95'		
CURVE 9			
T26	PC	1482787.28	386878.61
T27	PI	1482784.11	386880.93
T28	PT	1482781.19	386883.57
RADIUS =	75.00'		
LENGTH =	7.86'		
DELTA =	6°00'17" LEFT		
TANGENT=	3.93'		
CURVE 10			
T29	PC	1482568.93	387075.70
T30	PI	1482556.11	387087.29
T31	PT	1482549.67	387103.33
RADIUS =	75.00'		
LENGTH =	33.97'		
DELTA =	25°57'06" LEFT		
TANGENT=	17.28'		
CURVE 11			
T32	PC	1482501.14	387224.06
T33	PI	1482496.40	387235.83
T34	PT	1482495.81	387248.51
RADIUS =	75.00'		
LENGTH =	25.14'		
DELTA =	19°12'24" LEFT		
TANGENT=	12.69'		
CURVE 12			
T36	PC	1482459.00	387747.27
T37	PI	1482457.11	387764.78
T38	PT	1482447.62	387779.63
RADIUS =	75.00'		
LENGTH =	34.60'		
DELTA =	26°26'02" RIGHT		
TANGENT=	17.61'		
CURVE 13			
T39	PC	1482375.78	387894.65
T40	PI	1482372.18	387900.41
T41	PT	1482365.39	387900.29
RADIUS =	12.00'		
LENGTH =	12.37'		
DELTA =	59°02'31" RIGHT		
TANGENT=	6.80'		

RECREATION TRAIL CURVE DATA

POINT NAME	POINT TYPE	NORTHING	EASTING
CURVE 14			
T42	PC	1482329.74	387899.65
T43	PI	1482323.09	387899.53
T44	PT	1482319.47	387905.10
RADIUS =	12.00'		
LENGTH =	12.14'		
DELTA =	57°58'10" LEFT		
TANGENT=	6.65'		
CURVE 15			
T45	PC	1482278.75	387967.66
T46	PI	1482265.06	387988.24
T47	PT	1482241.82	387996.65
RADIUS =	75.00'		
LENGTH =	47.75'		
DELTA =	36°28'35" RIGHT		
TANGENT=	24.71'		
CURVE 16			
T48	PC	1481727.72	388182.75
T49	PI	1481718.95	388186.00
T50	PT	1481711.25	388191.31
RADIUS =	75.00'		
LENGTH =	18.61'		
DELTA =	14°13'09" LEFT		
TANGENT=	9.35'		
CURVE 17			
T51	PC	1481560.89	388294.92
T52	PI	1481553.12	388300.28
T53	PT	1481546.92	388307.39
RADIUS =	75.00'		
LENGTH =	18.77'		
DELTA =	14°20'23" LEFT		
TANGENT=	9.43'		
CURVE 18			
T54	PC	1481514.16	388344.95
T55	PI	1481340.90	388543.62
T56	PT	1481515.64	388740.99
RADIUS =	300.00'		
LENGTH =	432.55'		
DELTA =	82°36'39" LEFT		
TANGENT=	263.61'		
CURVE 19			
T57	PC	1481763.34	389020.77
T58	PI	1481773.39	389032.11
T59	PT	1481778.24	389046.46
RADIUS =	75.00'		
LENGTH =	29.90'		
DELTA =	22°50'33" RIGHT		
TANGENT=	15.15'		
CURVE 20			
T60	PC	1481815.00	389155.22
T61	PI	1481822.56	389177.57
T62	PT	1481815.96	389200.23
RADIUS =	75.00'		
LENGTH =	45.72'		
DELTA =	34°55'49" RIGHT		
TANGENT=	23.60'		
CURVE 21			
T63	PC	1481745.26	389442.75
T64	PI	1481742.42	389453.09
T65	PT	1481745.14	389463.46
RADIUS =	40.00'		
LENGTH =	20.94'		
DELTA =	30°00'00" LEFT		
TANGENT=	10.72'		
CURVE 22			
T66	PC	1481757.87	389512.06
T67	PI	1481761.16	389524.60
T68	PT	1481756.46	389536.68
RADIUS =	40.00'		
LENGTH =	25.07'		
DELTA =	35°54'54" RIGHT		
TANGENT=	12.96'		
CURVE 23			
T69	PC	1481742.54	389572.51
T70	PI	1481737.85	389584.59
T71	PT	1481726.96	389591.62
RADIUS =	40.00'		
LENGTH =	25.07'		
DELTA =	35°54'54" RIGHT		
TANGENT=	12.96'		
CURVE 24			
T72	PC	1481679.00	389622.59
T73	PI	1481671.31	389627.55
T74	PT	1481666.55	389635.36
RADIUS =	40.00'		
LENGTH =	17.98'		
DELTA =	25°45'12" LEFT		
TANGENT=	9.14'		
CURVE 25			
T75	PC	1481574.95	389785.45
T76	PI	1481570.51	389792.73
T77	PT	1481569.42	389801.18
RADIUS =	40.00'		
LENGTH =	25.07'		
DELTA =	24°03'34" LEFT		
TANGENT=	8.52'		
CURVE 26			
T78	PC	1481565.56	389831.13
T79	PI	1481561.73	389860.89
T80	PT	1481591.49	389864.72
RADIUS =	30.00'		
LENGTH =	47.12'		
DELTA =	90°00'00" LEFT		
TANGENT=	30.00		

RECREATION TRAIL CENTERLINE COORDINATES

POINT NAME	DESCRIPTION	NORTHING	EASTING	STATION
T1	POB	1482763.31	385986.60	0+00.00
T2	PC	1482766.44	386094.06	1+07.50
T3	PI	1482767.74	386138.76	1+52.23
T4	PT	1482801.93	386167.59	1+91.62
T5	PC	1482834.32	386192.81	2+32.67
T6	PI	1482841.60	386198.48	2+41.89
T7	PT	1482847.28	386205.73	2+51.01
T8	PC	1482963.97	386354.65	4+40.20
T9	PI	1482970.46	386362.77	4+50.60
T10	PT	1482974.50	386372.35	4+60.86
T11	PC	1483011.87	386460.94	5+57.01
T12	PI	1483016.08	386470.92	5+67.85
T13	PT	1483017.30	386481.69	5+78.54
T14	PC	1483025.02	386550.30	6+47.57
T15	PI	1483026.37	386562.30	6+59.65
T16	PT	1483023.89	386574.12	6+71.53
T17	PC	1483009.70	386641.60	7+40.48
T18	PI	1483007.45	386652.29	7+51.41
T19	PT	1483002.25	386661.90	7+62.18
T20	PC	1482980.06	386702.85	8+08.76
T21	PI	1482978.04	386706.57	8+13.00
T22	PT	1482975.61	386710.05	8+17.23
T23	PC	1482935.31	386767.77	8+87.62
T24	PI	1482927.89	386778.39	9+00.57
T25	PT	1482917.35	386785.90	9+13.27
T26	PC	1482787.28	386878.61	10+72.99
T27	PI	1482784.11	386880.93	10+76.93
T28	PT	1482781.19	386883.57	10+80.85
T29	PC	1482568.93	387075.70	13+67.15
T30	PI	1482556.11	387087.29	13+84.44
T31	PT	1482549.67	387103.33	14+01.12
T32	PC	1482501.14	387224.06	15+31.24
T33	PI	1482496.40	387235.83	15+43.93
T34	PT	1482495.81	387248.51	15+56.38
T35	PI	1482482.69	387527.52	18+35.71
T36	PC	1482459.00	387747.27	20+56.73
T37	PI	1482457.11	387764.78	20+74.34
T38	PT	1482447.62	387779.63	20+91.33
T39	PC	1482375.78	387894.65	22+26.95
T40	PI	1482372.18	387900.41	22+33.74
T41	PT	1482365.39	387900.29	22+39.31
T42	PC	1482329.74	387899.65	22+74.97
T43	PI	1482323.09	387899.53	22+81.61
T44	PT	1482319.47	387905.10	22+87.11
T45	PC	1482278.75	387967.66	23+61.75
T46	PI	1482265.06	387988.24	23+86.47
T47	PT	1482241.82	387996.65	24+09.50
T48	PC	1481727.72	388182.75	29+56.25
T49	PI	1481718.95	388186.00	29+65.60
T50	PT	1481711.25	388191.31	29+74.86
T51	PC	1481560.89	388294.92	31+57.46
T52	PI	1481553.12	388300.28	31+66.90
T53	PT	1481546.92	388307.39	31+76.24
T54	PC	1481514.16	388344.95	32+26.08
T55	PI	1481340.90	388543.62	34+89.68
T56	PT	1481515.64	388740.99	36+58.63
T57	PC	1481763.34	389020.77	40+32.30
T58	PI	1481773.39	389032.11	40+47.45
T59	PT	1481778.24	389046.46	40+62.20
T60	PC	1481815.00	389155.22	41+77.00
T61	PI	1481822.56	389177.57	42+00.59
T62	PT	1481815.96	389200.23	42+22.72
T63	PC	1481745.26	389442.75	44+75.34
T64	PI	1481742.42	389453.09	44+86.06
T65	PT	1481745.14	389463.46	44+96.29
T66	PC	1481757.87	389512.06	45+46.53
T67	PI	1481761.16	389524.60	45+59.49
T68	PT	1481756.46	389536.68	45+71.60
T69	PC	1481742.54	389572.51	46+10.03
T70	PI	1481737.85	389584.59	46+23.00
T71	PT	1481726.96	389591.62	46+35.11
T72	PC	1481679.00	389622.59	46+92.20
T73	PI	1481671.31	389627.55	47+01.34
T74	PT	1481666.55	389635.36	47+10.18
T75	PC	1481574.95	389785.45	48+86.02
T76	PI	1481570.51	389792.73	48+94.54
T77	PT	1481569.42	389801.18	49+02.81
T78	PC	1481565.56	389831.13	49+33.01
T79	PI	1481561.73	389860.89	49+63.01
T80	PT	1481591.49	389864.72	49+80.13
T81	POE	1481602.62	389866.15	49+91.35

US Army Corps of Engineers
Chicago District

SYMBOL	DESCRIPTION	DATE	APPROVED

DESIGNED BY: MWC
DRAWN BY: JW/DB
CHECKED BY: JAG
SUBMITTED BY: JOHN A. GROBOSKI, P.E. 7/31/08
DATE: FEBRUARY 2009
SCALE: AS SHOWN
SOLICITATION NUMBER: W912P6-09-B-0002

U.S. ARMY ENGINEER DISTRICT
CORPS OF ENGINEERS
CHICAGO, ILLINOIS

LITTLE CALUMET RIVER, INDIANA
LOCAL FLOOD PROTECTION
STAGE VII - FLOODWALL

RECREATION TRAIL & RAMP CONTROL DATA & TYPICAL SECTIONS

SHEET REFERENCE NUMBER:
R-09
SHEET 50 OF 79

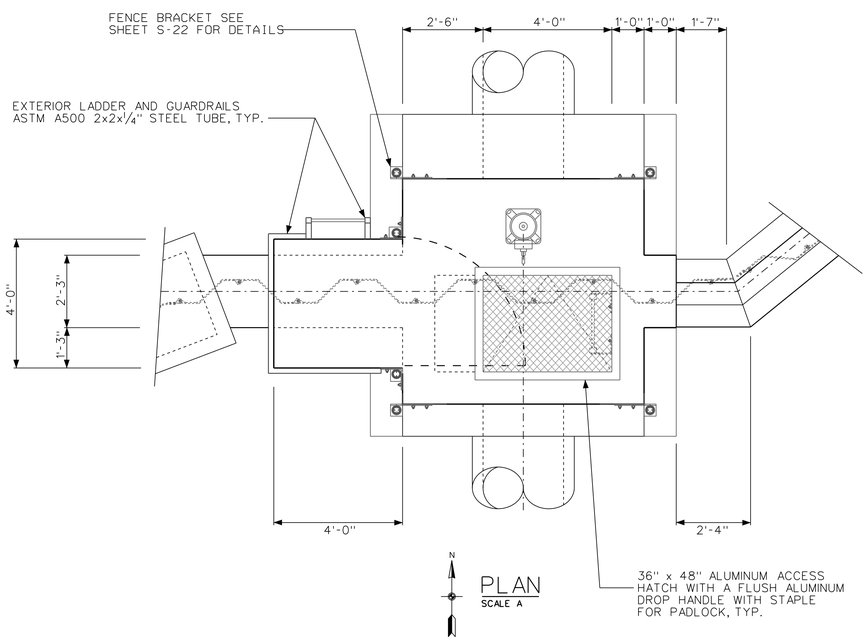

PLAN
SCALE A

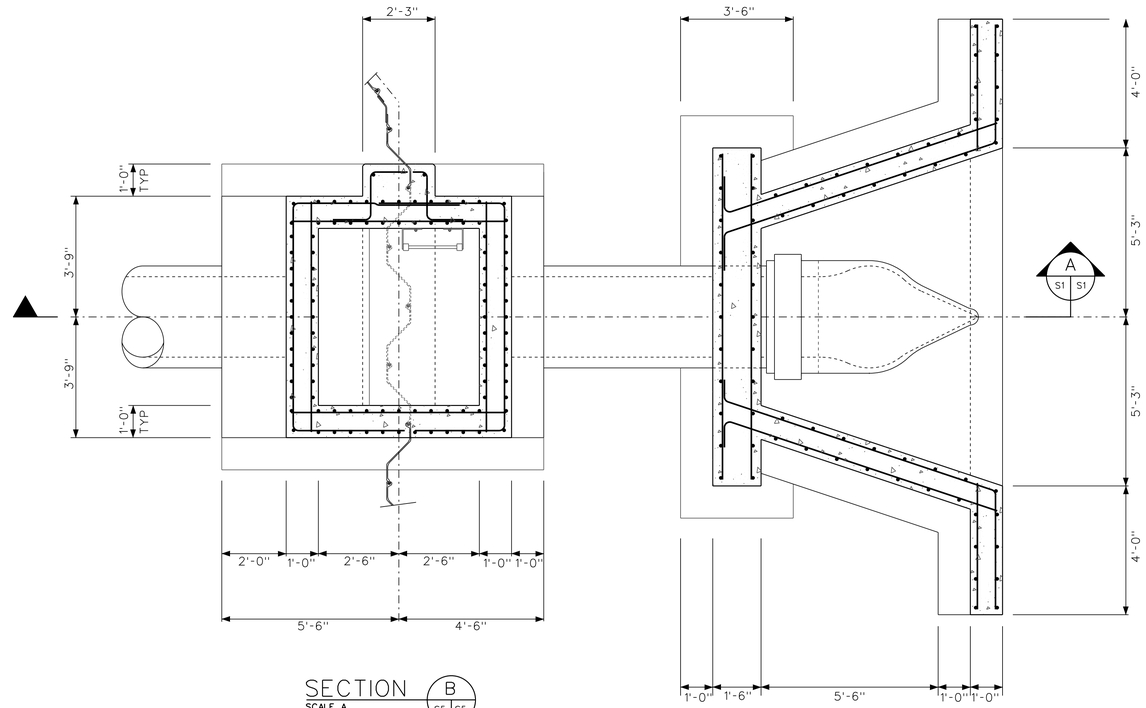

SECTION B
SCALE A

NOTE: ALL HEADWALL REINFORCING IS #5 @ 12" UNLESS OTHERWISE NOTED.

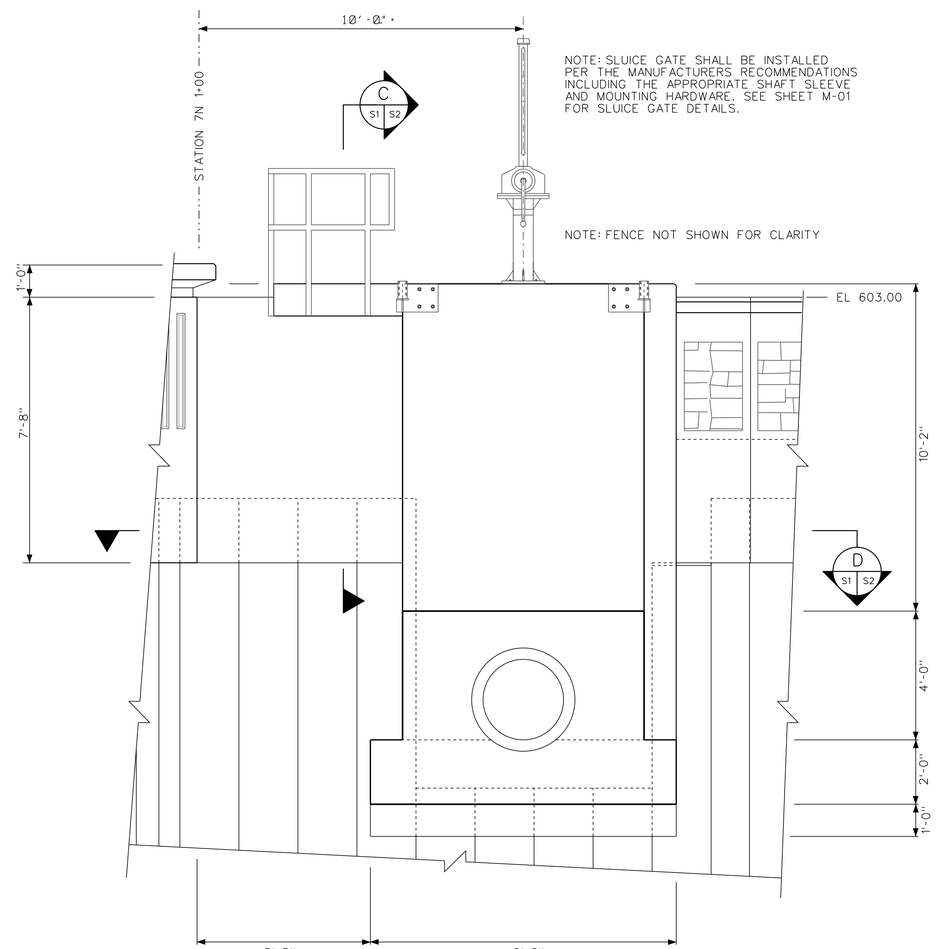

NOTE: SLUICE GATE SHALL BE INSTALLED PER THE MANUFACTURERS RECOMMENDATIONS INCLUDING THE APPROPRIATE SHAFT SLEEVE AND MOUNTING HARDWARE. SEE SHEET M-01 FOR SLUICE GATE DETAILS.

NOTE: FENCE NOT SHOWN FOR CLARITY

SOUTH ELEVATION
SCALE A

12 0 1 2 3
SCALE A

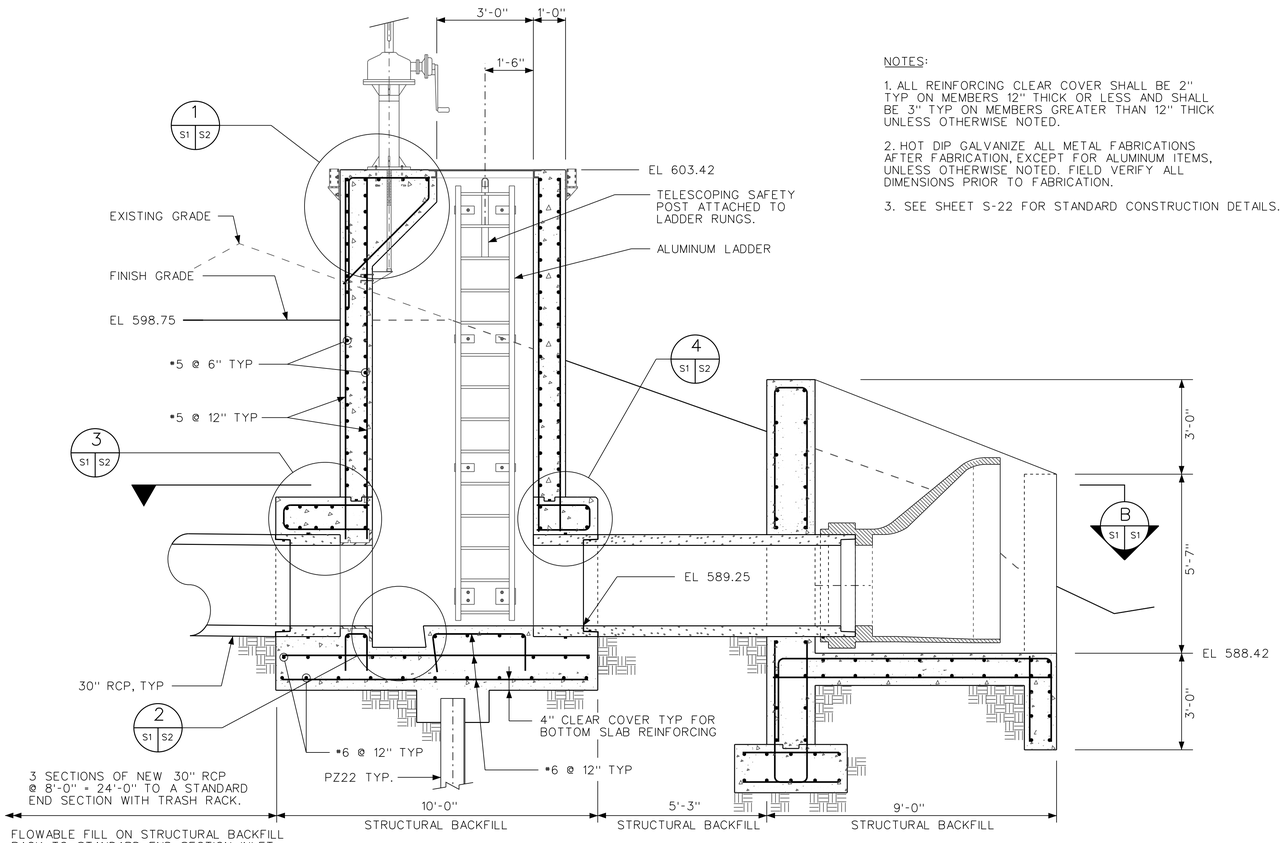

FLOWABLE FILL ON STRUCTURAL BACKFILL BACK TO STANDARD END SECTION INLET WITH A TRASH RACK. SEE SHEET C-32 FOR THE GATEWELL SYSTEM PLAN AND PROFILE.

SECTION A
SCALE A

NOTES:

1. ALL REINFORCING CLEAR COVER SHALL BE 2" TYP ON MEMBERS 12" THICK OR LESS AND SHALL BE 3" TYP ON MEMBERS GREATER THAN 12" THICK UNLESS OTHERWISE NOTED.

2. HOT DIP GALVANIZE ALL METAL FABRICATIONS AFTER FABRICATION, EXCEPT FOR ALUMINUM ITEMS, UNLESS OTHERWISE NOTED. FIELD VERIFY ALL DIMENSIONS PRIOR TO FABRICATION.

3. SEE SHEET S-22 FOR STANDARD CONSTRUCTION DETAILS.

US Army Corps of Engineers Chicago District

SYMBOL	AMENDMENT DESCRIPTION	DATE	APPROVED	SYMBOL	DESCRIPTION	DATE	APPROVED

DESIGNED BY: EGS
DATE: FEBRUARY 2009
DRAWN BY: EGS
SCALE: AS SHOWN
CHECKED BY: JJS
SOLICITATION NUMBER: W912P6-09-B-0002
STEPHEN TREHARNE, P.E. 7/31/08
SUBMITTED BY:
DATE:

U.S. ARMY ENGINEER DISTRICT
CORPS OF ENGINEERS
CHICAGO, ILLINOIS

LITTLE CALUMET RIVER, INDIANA
LOCAL FLOOD PROTECTION
STAGE VII - FLOODWALL

COLUMBIA AVE 30" GATEWELL
PLAN, ELEVATION, AND SECTIONS

SHEET REFERENCE NUMBER:
S-01
SHEET 51 OF 79

PLOT DATE: 2/6/2009
FILENAME: C:\Documents and Settings\h6tesegs\My Documents\D Drive\working\dms32217\LCS7_S-01FN.dgn

LCS7_S-01FN.dgn 2/6/2009 1:50:53 PM

NOTES:

1. ALL REINFORCING CLEAR COVER SHALL BE 2" TYP ON MEMBERS 12" THICK OR LESS AND SHALL BE 3" TYP ON MEMBERS GREATER THAN 12" THICK UNLESS OTHERWISE NOTED.

2. HOT DIP GALVANIZE ALL METAL FABRICATIONS AFTER FABRICATION, EXCEPT FOR ALUMINUM ITEMS, UNLESS OTHERWISE NOTED. FIELD VERIFY ALL DIMENSIONS PRIOR TO FABRICATION.

3. SEE SHEET S-22 FOR STANDARD CONSTRUCTION DETAILS.

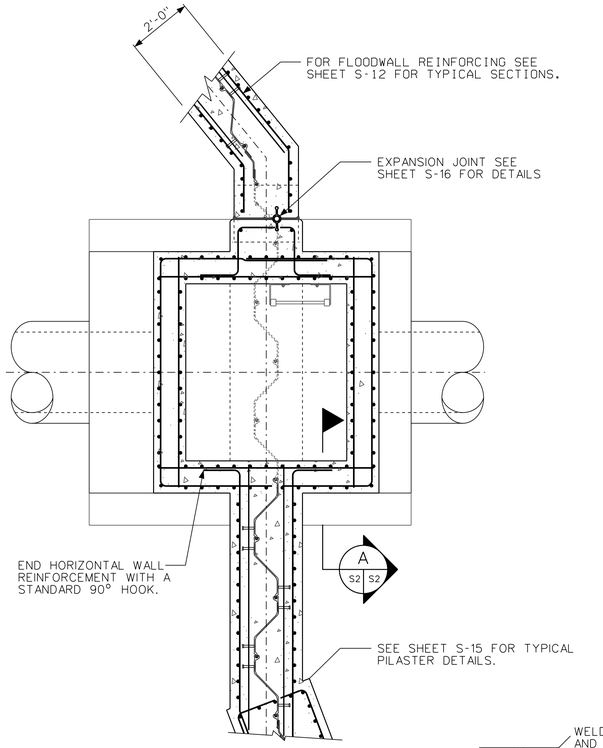

SECTION D
SCALE A
S1 S2

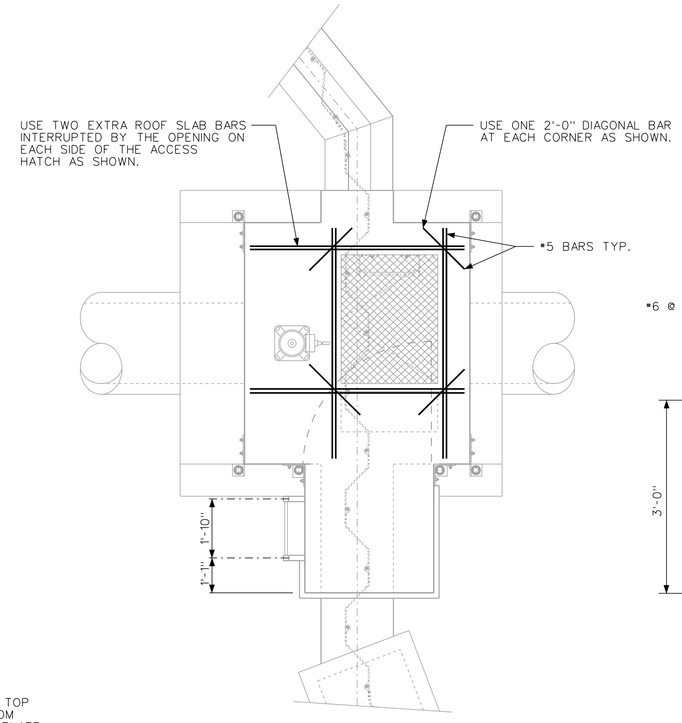

PLAN WITH EXTRA BARS SHOWN
SCALE A

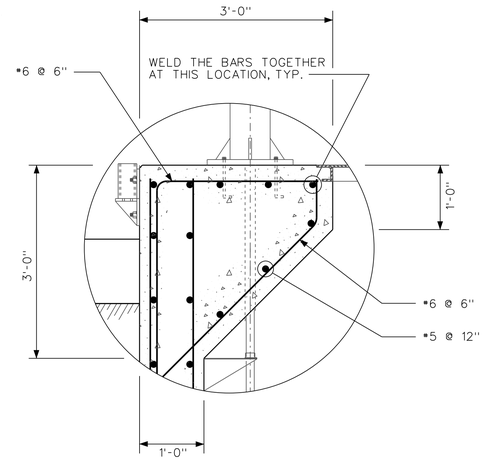

DETAIL 1
NTS
S1 S2

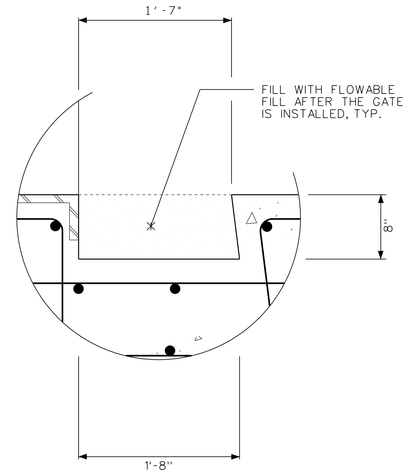

DETAIL 2
NTS
S1 S2

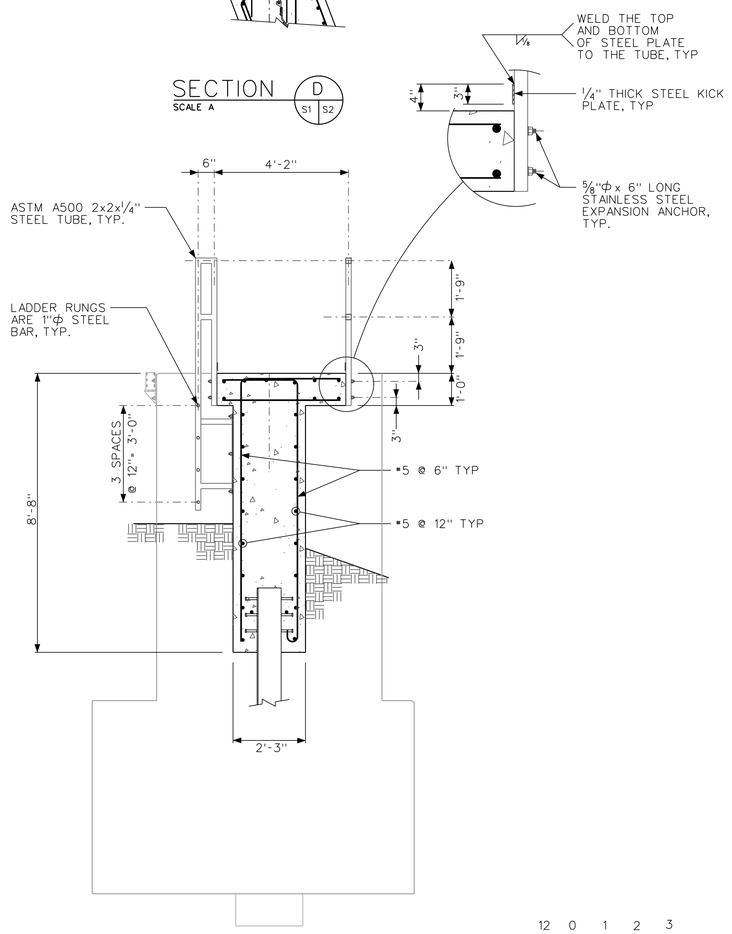

SECTION C
SCALE A
S1 S2

12 0 1 2 3
SCALE A

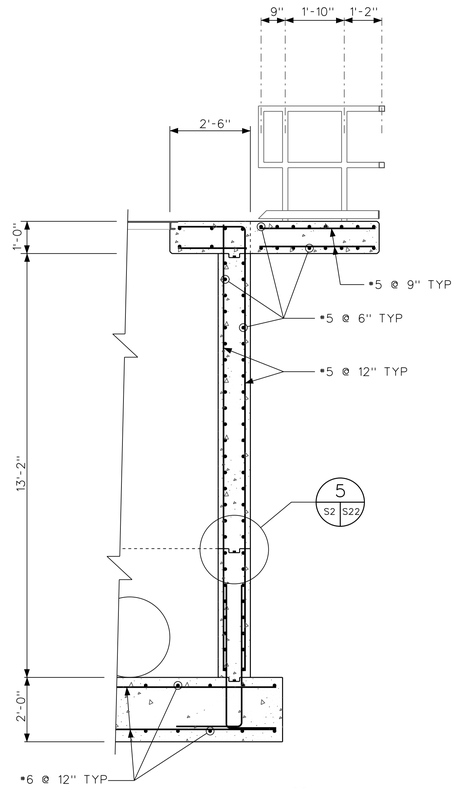

SECTION A
SCALE A
S2 S2

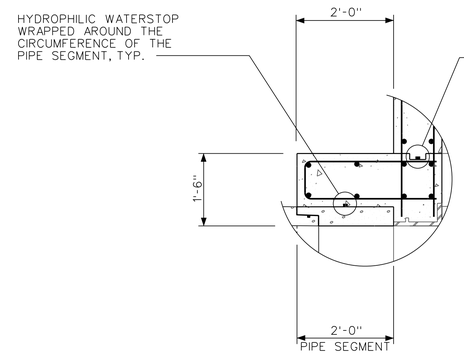

DETAIL 3
NTS
S1 S2

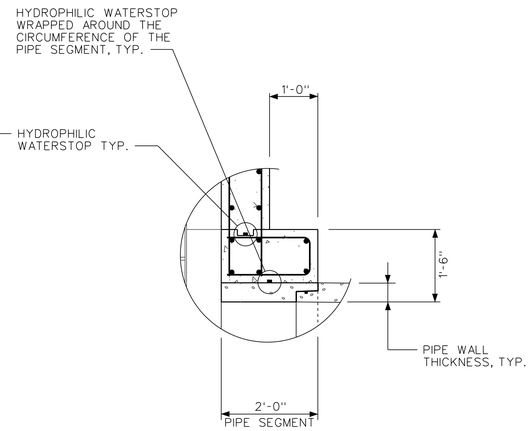

DETAIL 4
NTS
S1 S2

US Army Corps of Engineers
Chicago District

SYMBOL	AMENDMENT DESCRIPTION	DATE	APPROVED	SYMBOL	DESCRIPTION	DATE	APPROVED

U.S. ARMY ENGINEER DISTRICT
CORPS OF ENGINEERS
CHICAGO, ILLINOIS

DESIGNED BY: EGS
DATE: FEBRUARY 2009
DRAWN BY: EGS
SCALE: AS SHOWN
CHECKED BY: JJS
SOLICITATION NUMBER: W912P6-09-B-0002
STEPHEN TREHARNE, P.E. 7/31/08
SUBMITTED BY:
DATE:

LITTLE CALUMET RIVER, INDIANA
LOCAL FLOOD PROTECTION
STAGE VII - FLOODWALL
COLUMBIA AVE 30" GATEWELL
SECTIONS AND DETAILS

SHEET REFERENCE NUMBER:
S-02
SHEET 52 OF 79

PLOT DATE: 2/6/2009
FILENAME: C:\Documents and Settings\h6tesegs\My Documents\D Drive\working\dms32217\LCS7_S-02FN.dgn

LCS7_S-02FN.dgn 2/6/2009 1:52:50 PM

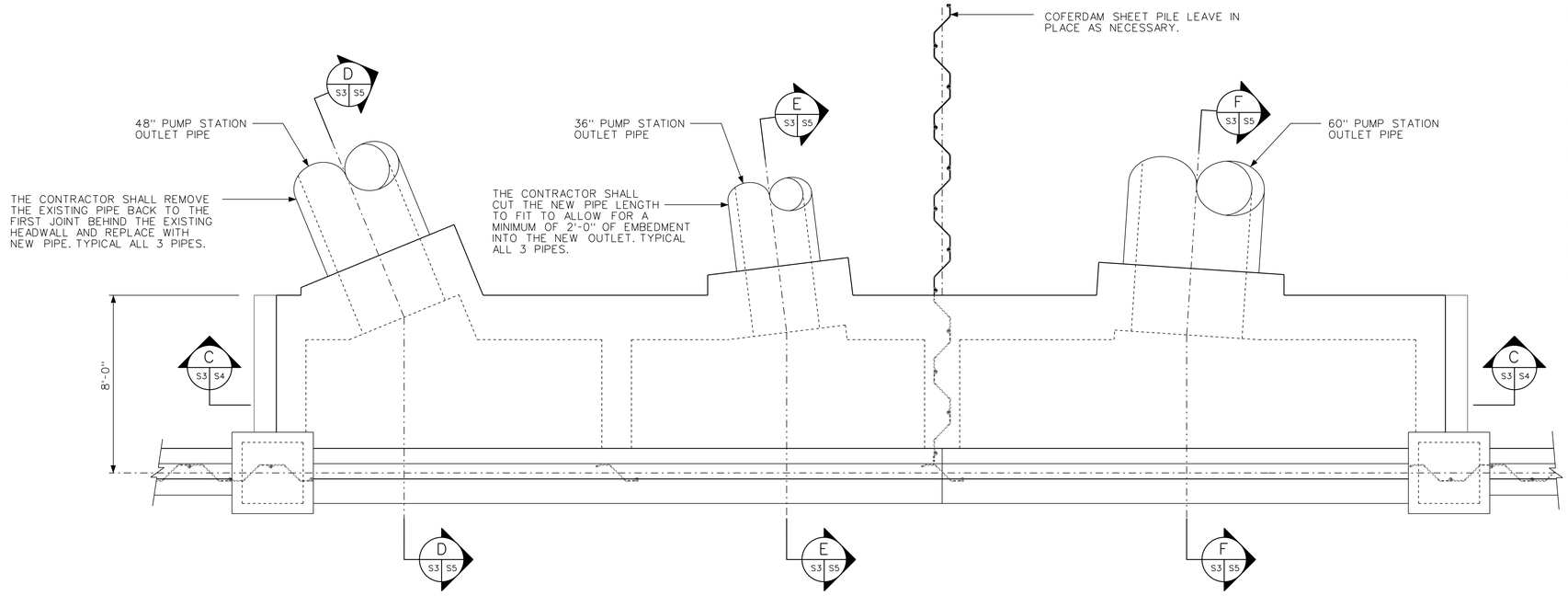

PLAN
SCALE A

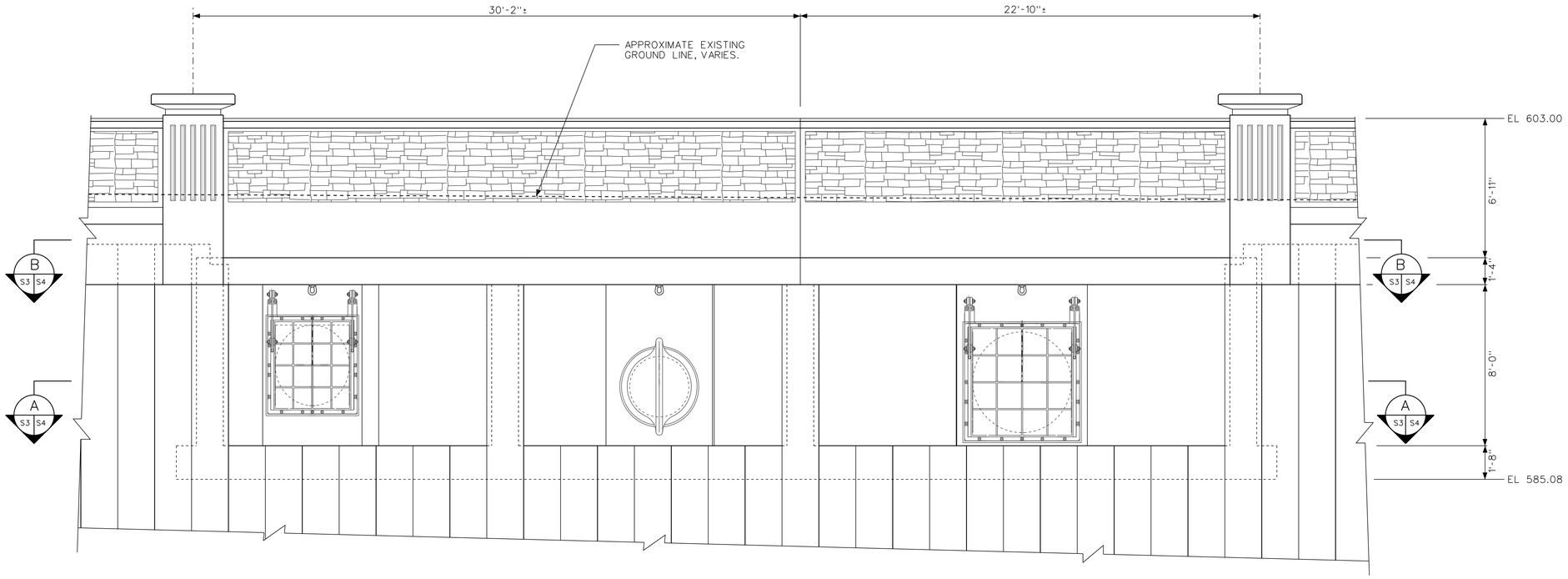

SOUTH ELEVATION
SCALE A

12 0 1 2 3 4 5
SCALE A

US Army Corps of Engineers Chicago District

SYMBOL	AMENDMENT DESCRIPTION	DATE	APPROVED	SYMBOL	DESCRIPTION	DATE	APPROVED

U.S. ARMY ENGINEER DISTRICT
CORPS OF ENGINEERS
CHICAGO, ILLINOIS

DESIGNED BY: EGS
DATE: FEBRUARY 2009
DRAWN BY: EGS
SCALE: AS SHOWN
CHECKED BY: JJS
SOLICITATION NUMBER: W912P6-09-B-0002
STEPHEN TREHARNE, P.E. 7/31/08
SUBMITTED BY:
DATE:

LITTLE CALUMET RIVER, INDIANA
LOCAL FLOOD PROTECTION
STAGE VII - FLOODWALL

WALNUT ST PUMP STATION
OUTFALL PLAN AND ELEVATION

SHEET REFERENCE NUMBER:
S-03
SHEET 53 OF 79

PLOT DATE: 2/6/2009
FILENAME: C:\Documents and Settings\h6tesegs\My Documents\D Drive\working\dms32217\LCS7_S-03FN.dgn

LCS7_S-03FN.dgn 2/6/2009 1:54:57 PM

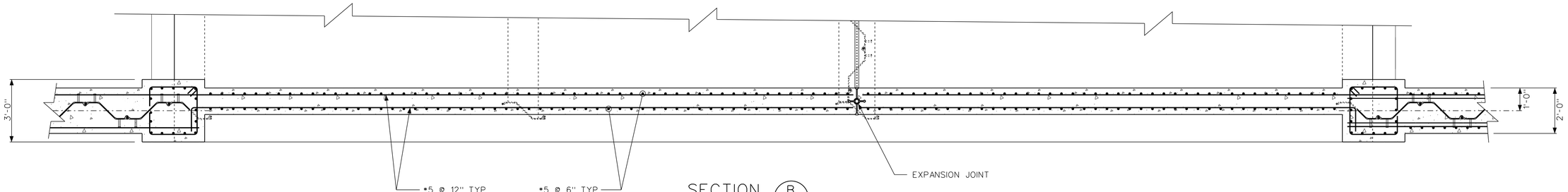

SECTION B
SCALE A
S3 S4

NOTES:

1. ALL REINFORCING CLEAR COVER SHALL BE 2" TYP ON MEMBERS 12" THICK OR LESS AND SHALL BE 3" TYP ON MEMBERS GREATER THAN 12" THICK UNLESS OTHERWISE NOTED.

2. SEE SHEET S-22 FOR STANDARD CONSTRUCTION DETAILS.

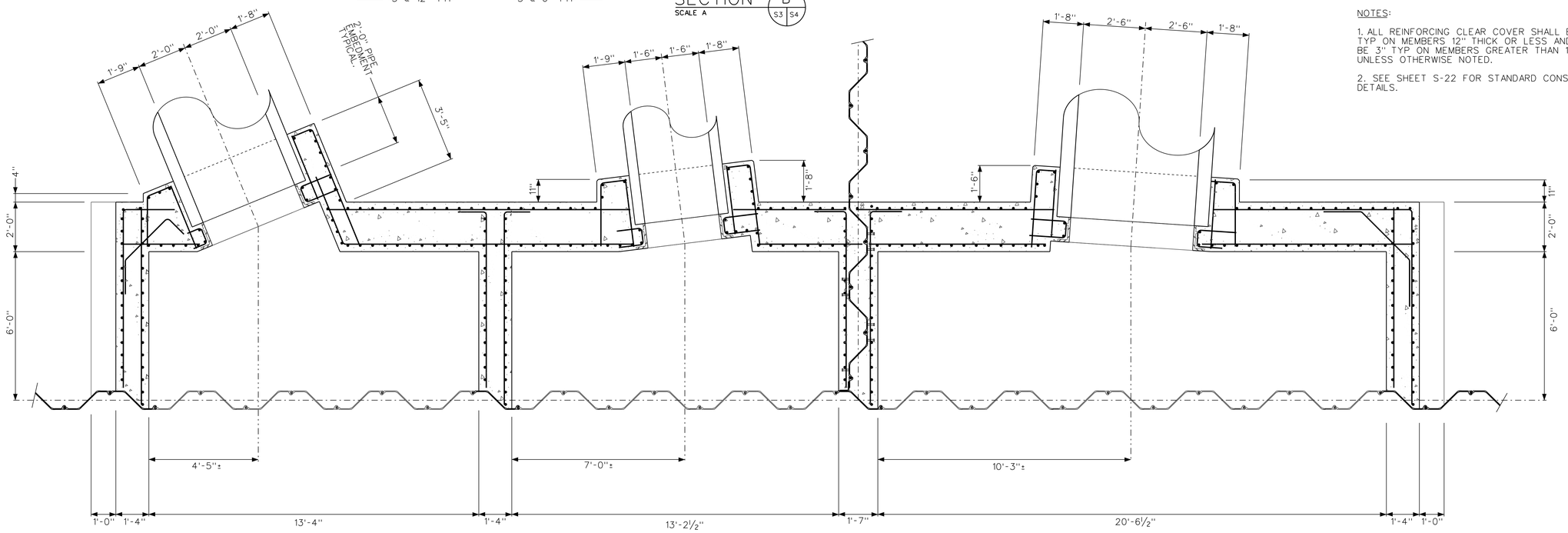

NOTE: THE CONTRACTOR SHALL VERIFY THE EXISTING PIPE LOOCATIONS AND ANGLES PRIOR TO CONSTRUCTION AND PRODUCING REINFORCING AND FORMWORK SHOP DRAWINGS.

SECTION A
SCALE A
S3 S4

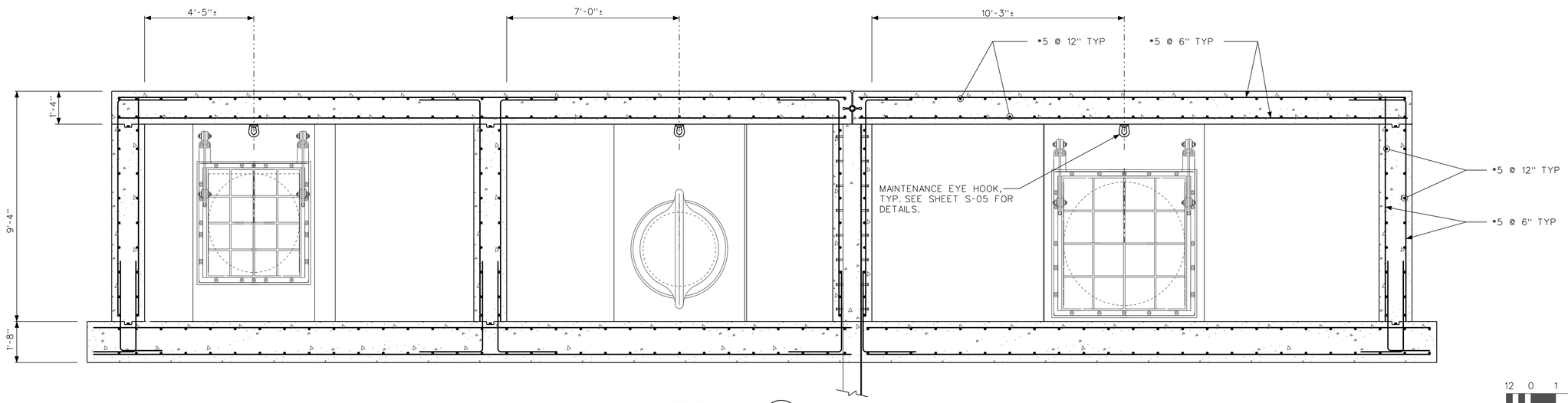

SECTION C
SCALE A
S3 S4

12 0 1 2 3
SCALE A

US Army Corps of Engineers Chicago District

SYMBOL	AMENDMENT DESCRIPTION	DATE	APPROVED	SYMBOL	DESCRIPTION	DATE	APPROVED

DESIGNED BY: EGS
DATE: FEBRUARY 2009
DRAWN BY: EGS
SCALE: AS SHOWN
CHECKED BY: JJS
SOLICITATION NUMBER: W912P6-09-B-0002
STEPHEN TREHARNE, P.E. 7/31/08
SUBMITTED BY:
DATE:

U.S. ARMY ENGINEER DISTRICT
CORPS OF ENGINEERS
CHICAGO, ILLINOIS

LITTLE CALUMET RIVER, INDIANA
LOCAL FLOOD PROTECTION
STAGE VII - FLOODWALL

WALNUT ST PUMP STATION
OUTLET SECTIONS

SHEET REFERENCE NUMBER:
S-04
SHEET 54 OF 79

PLOT DATE: 2/6/2009
FILENAME: C:\Documents and Settings\h6tesegs\My Documents\D Drive\working\dms32217\LCS7_S-04FN.dgn

LCS7_S-04FN.dgn 2/6/2009 2:11:35 PM

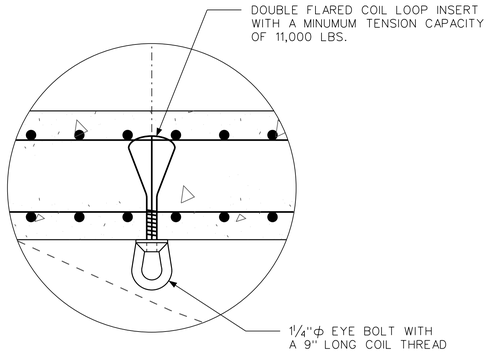

MAINTENANCE EYE HOOK DETAL

DETAIL 1 (S5 | S5)
NTS

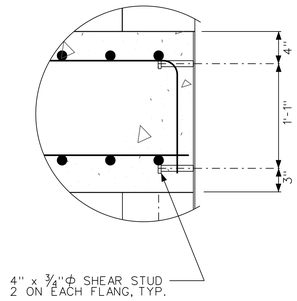

DETAIL 2 (S5 | S5)
NTS

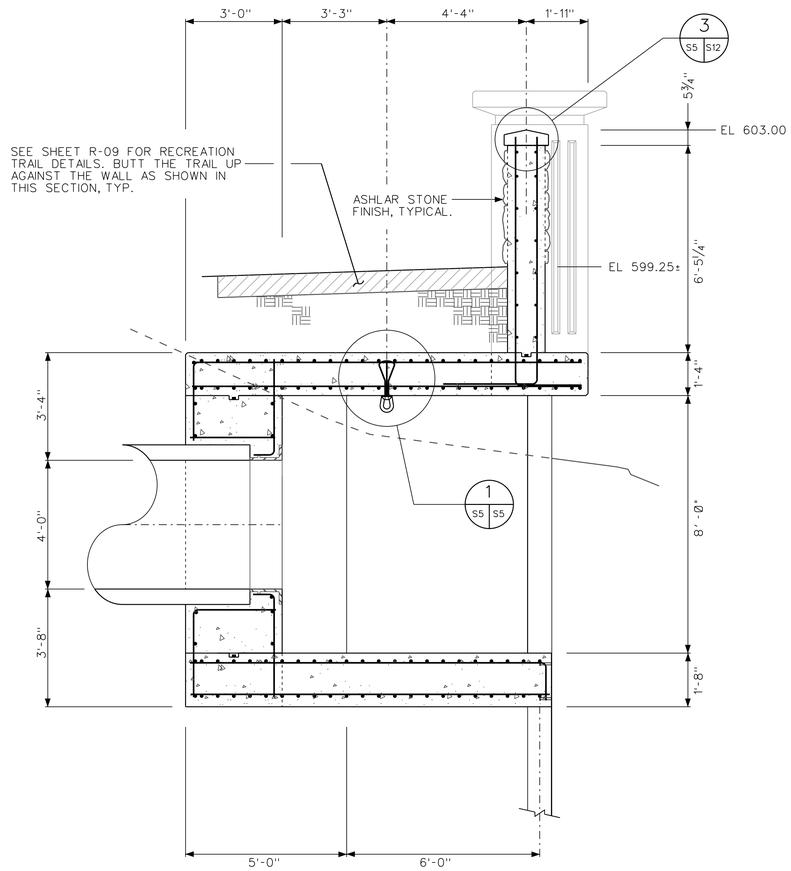

SECTION D (S3 | S5)
SCALE A

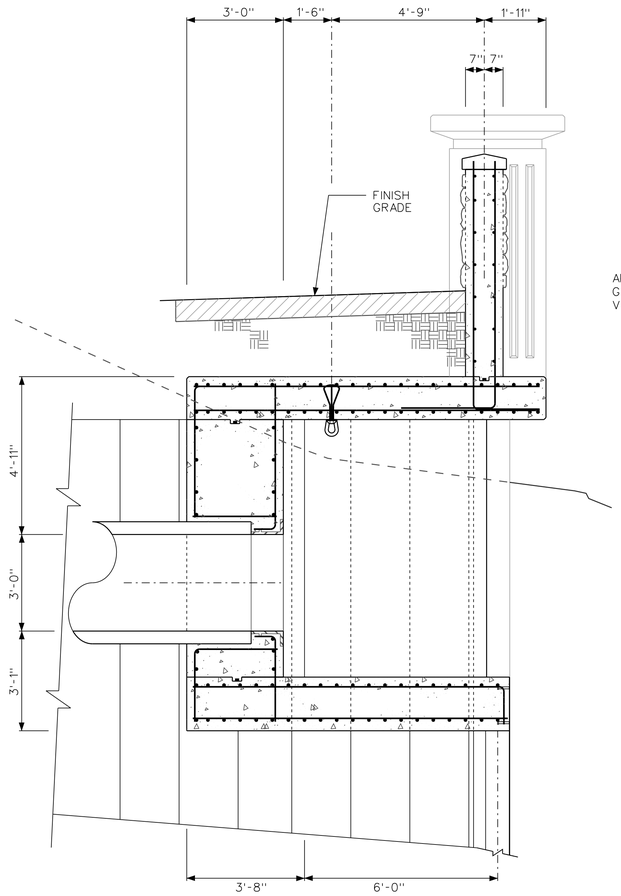

SECTION E (S3 | S5)
SCALE A

NOTE: GATES NOT SHOWN FOR CLARITY

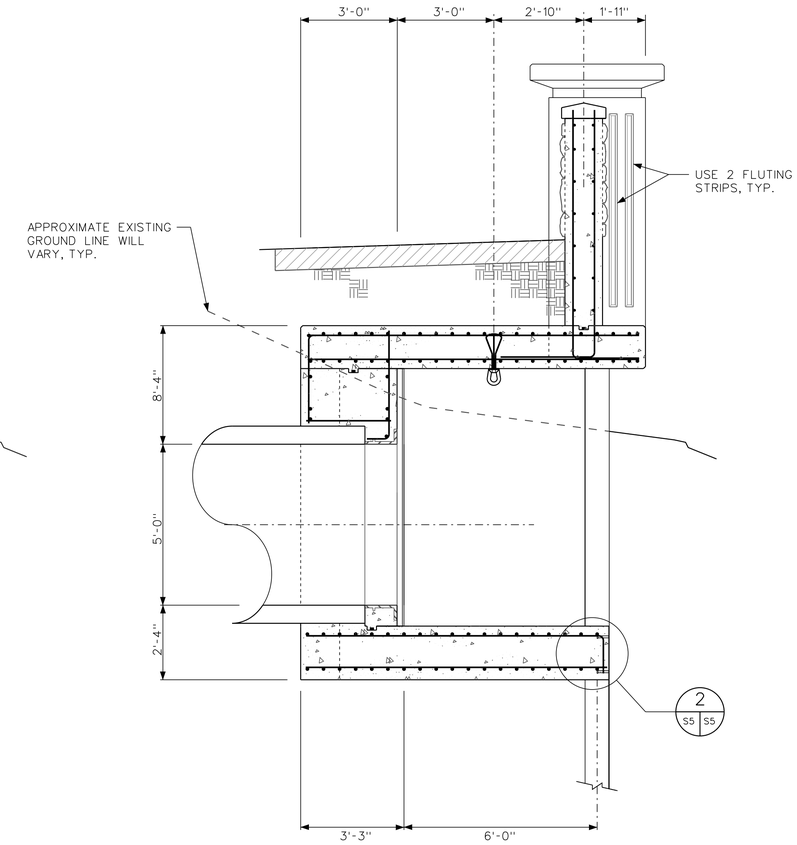

SECTION F (S3 | S5)
SCALE A

12 0 1 2 3
SCALE A

US Army Corps of Engineers Chicago District

SYMBOL	AMENDMENT DESCRIPTION	DATE	APPROVED	SYMBOL	DESCRIPTION	DATE	APPROVED

U.S. ARMY ENGINEER DISTRICT
CORPS OF ENGINEERS
CHICAGO, ILLINOIS

DESIGNED BY: EGS | DATE: FEBRUARY 2009
DRAWN BY: EGS | SCALE: AS SHOWN
CHECKED BY: JJS | SOLICITATION NUMBER: W912P6-09-B-0002
STEPHEN TREHARNE, P.E. 7/31/08
SUBMITTED BY: | DATE:

LITTLE CALUMET RIVER, INDIANA
LOCAL FLOOD PROTECTION
STAGE VII - FLOODWALL

WALNUT ST PUMP STATION
OUTLET SECTIONS AND DETAILS

SHEET REFERENCE NUMBER:
S-05
SHEET 55 OF 79

PLOT DATE: 2/6/2009
FILENAME: C:\Documents and Settings\h6tesegs\My Documents\D Drive\working\dms32217\LCS7_S-05FN.dgn

LCS7_S-05FN.dgn 2/6/2009 2:12:50 PM

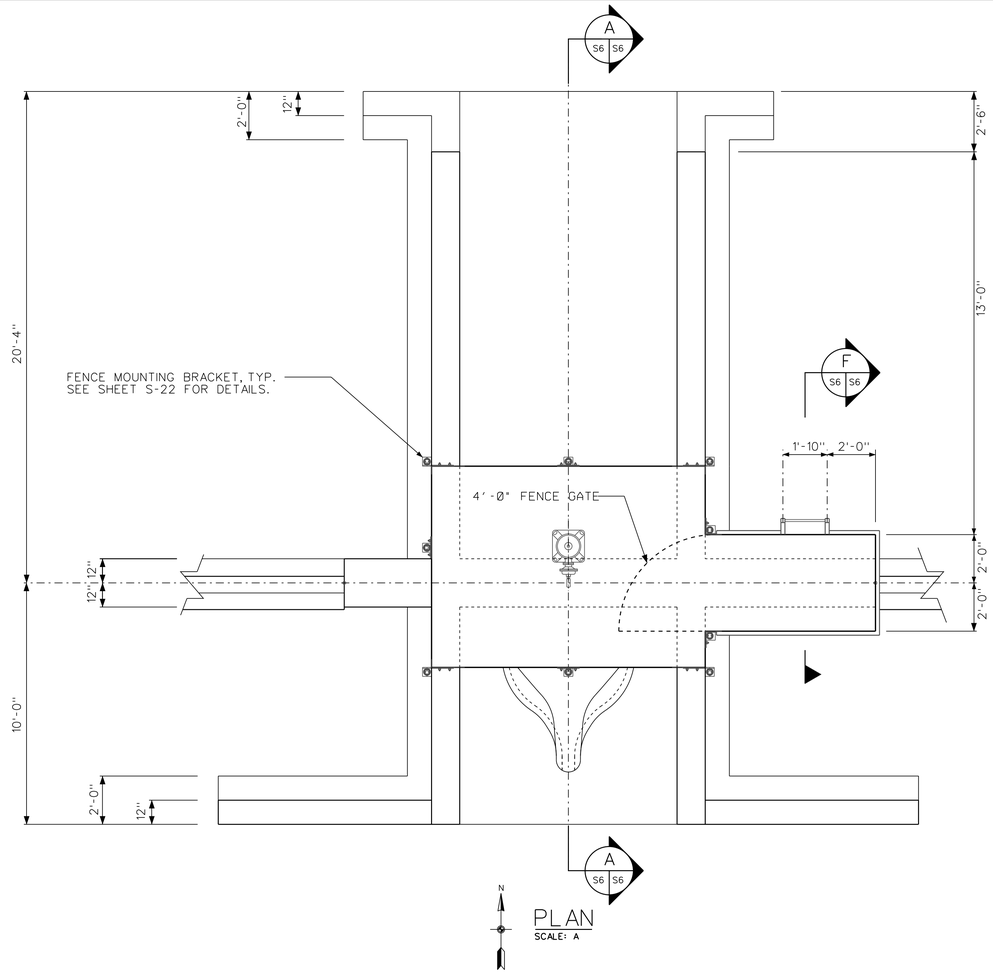

PLAN
SCALE: A

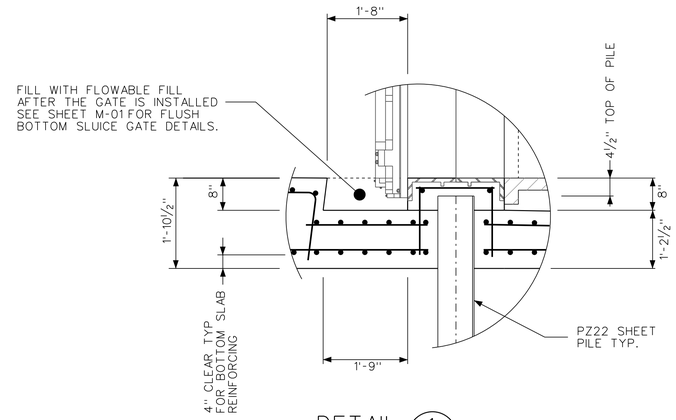

DETAIL 1
NTS
S6 S6

NOTES:

1. ALL REINFORCING CLEAR COVER SHALL BE 2" TYP ON MEMBERS 12" THICK OR LESS AND SHALL BE 3" TYP ON MEMBERS GREATER THAN 12" THICK UNLESS OTHERWISE NOTED.

2. HOT DIP GALVANIZE ALL METAL FABRICATIONS, EXCEPT FOR ALUMINUM ITEMS, AFTER FABRICATION UNLESS OTHER WISE NOTED. FIELD VERIFY ALL DIMENSIONS PRIOR TO FABRICATION.

3. SEE SHEET S-22 FOR STANDARD CONSTRUCTION DETAILS.

CONSTRUCTION NOTES:

1. THE CONTRACTOR SHALL INSTALL THE STEEL SHEET PILE FIRST TO A TOP OF PILE ELEVATION OF 601.0.

2. THE CONTRACTOR SHALL EXCAVATE AND PLACE THE BASE SLAB NEXT WHILE THE FULL HEIGHT SHEET PILE WALL MAINTAINS A LINE OF PROTECTION AGAINST FLOODING.

3. THE CONTRACTOR SHALL PLACE THE 14" SIDE WALLS INCLUDING WING WALLS.

4. NEXT THE CONTRACTOR SHALL REMOVE THE SHEET PILE SECTION LENGTHS FOR THE SLUICE OPENING THROUGH THE SHEET PILE AS DIMENSIONED AND SHOWN ON THE DRAWINGS. FINALLY THE CONTRACTOR SHALL REMOVE THE REMAINING SHEET PILE TOP SECTIONS TO THE FINAL ELEVATIONS SHOWN AND DIMENSIONED ON THE DRAWINGS AND FINISH CONSTRUCTION OF THE SLUICE/I-WALL STRUCTURE. SEE NOTE 10 ON SHEET G-03 FOR MAINTAINING LEVEL OF FLOOD PROTECTION.

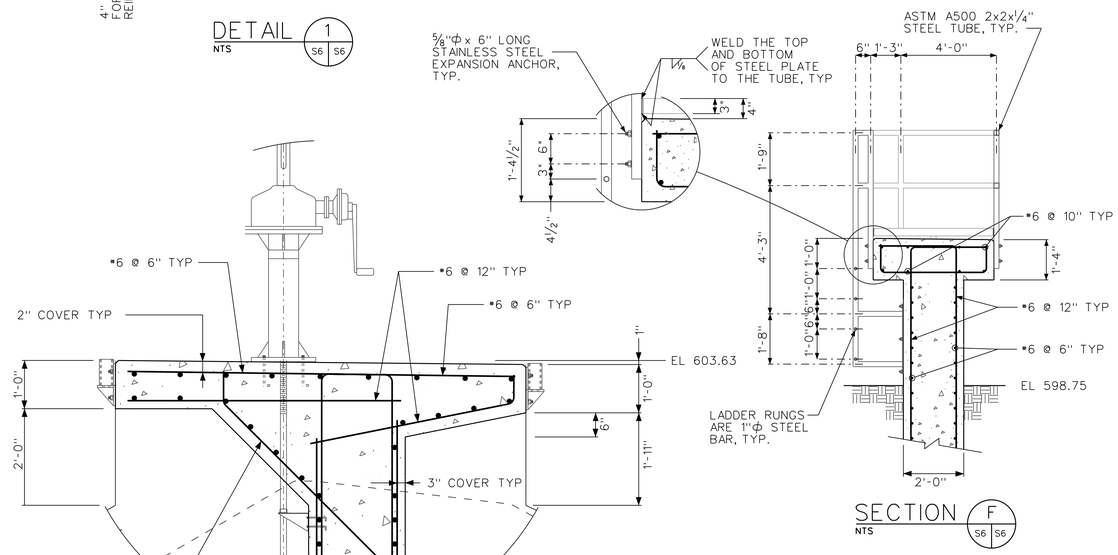

SECTION F
NTS
S6 S6

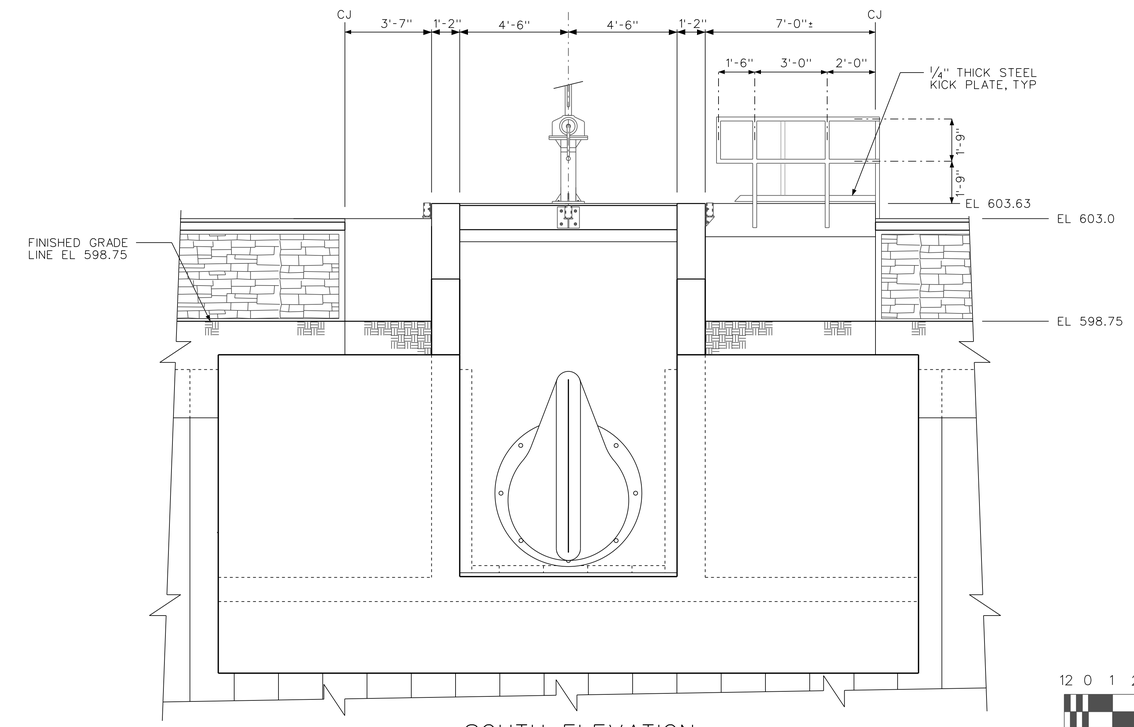

SOUTH ELEVATION
SCALE A

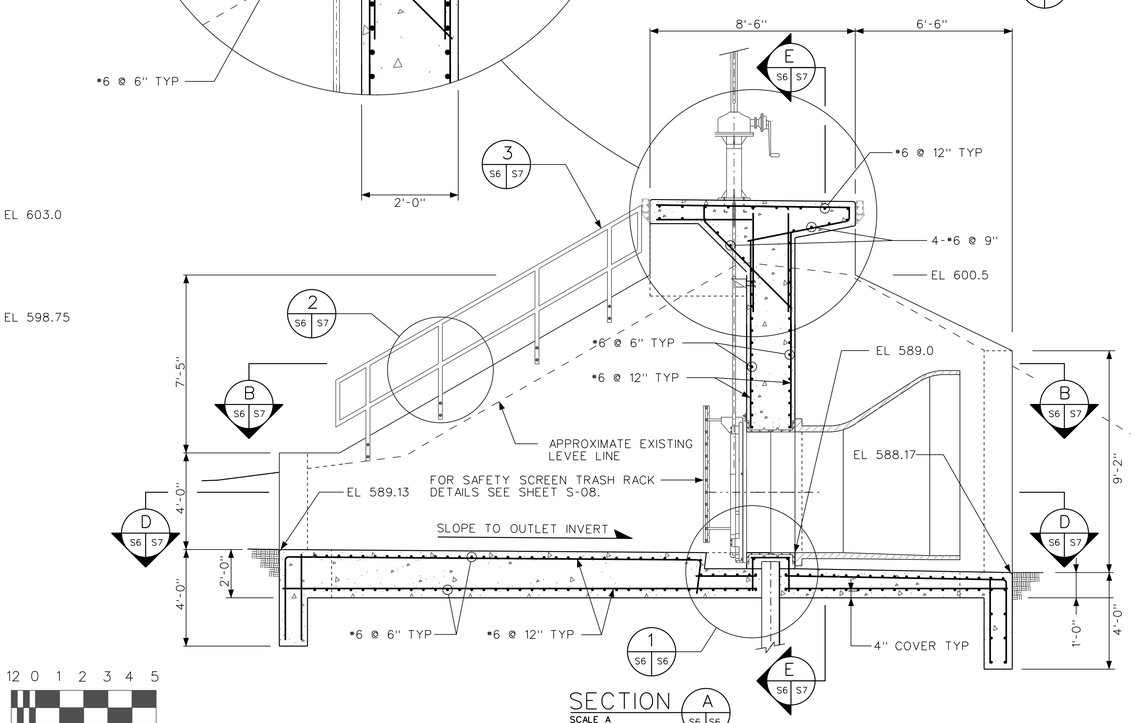

SECTION A
SCALE A
S6 S6

12 0 1 2 3 4 5
SCALE A

US Army Corps of Engineers
Chicago District

SYMBOL	AMENDMENT DESCRIPTION	DATE APPROVED	SYMBOL	DESCRIPTION	DATE APPROVED

DESIGNED BY: EGS	DATE: FEBRUARY 2009	
DRAWN BY: EGS	SCALE: AS SHOWN	
CHECKED BY: JJS	SOLICITATION NUMBER: W912P6-09-B-0002	
SUBMITTED BY: STEPHEN TRECHARNE, P.E.	DATE: 7/31/08	

U.S. ARMY ENGINEER DISTRICT
CORPS OF ENGINEERS
CHICAGO, ILLINOIS

LITTLE CALUMET RIVER, INDIANA
LOCAL FLOOD PROTECTION
STAGE VII - FLOODWALL
NORTHCOTE 60" GATED SLUICE
STRUCTURE-PLAN, ELEVATIONS
AND SECTIONS

SHEET REFERENCE NUMBER:
S-06
SHEET 56 OF 79

PLOT DATE: 2/6/2009
FILENAME: C:\Documents and Settings\n16sesgs\My Documents\D Drive\working\dms32217\LCS7_S-06FN.dgn

LCS7_S-06FN.dgn 2/6/2009 2:13:58 PM

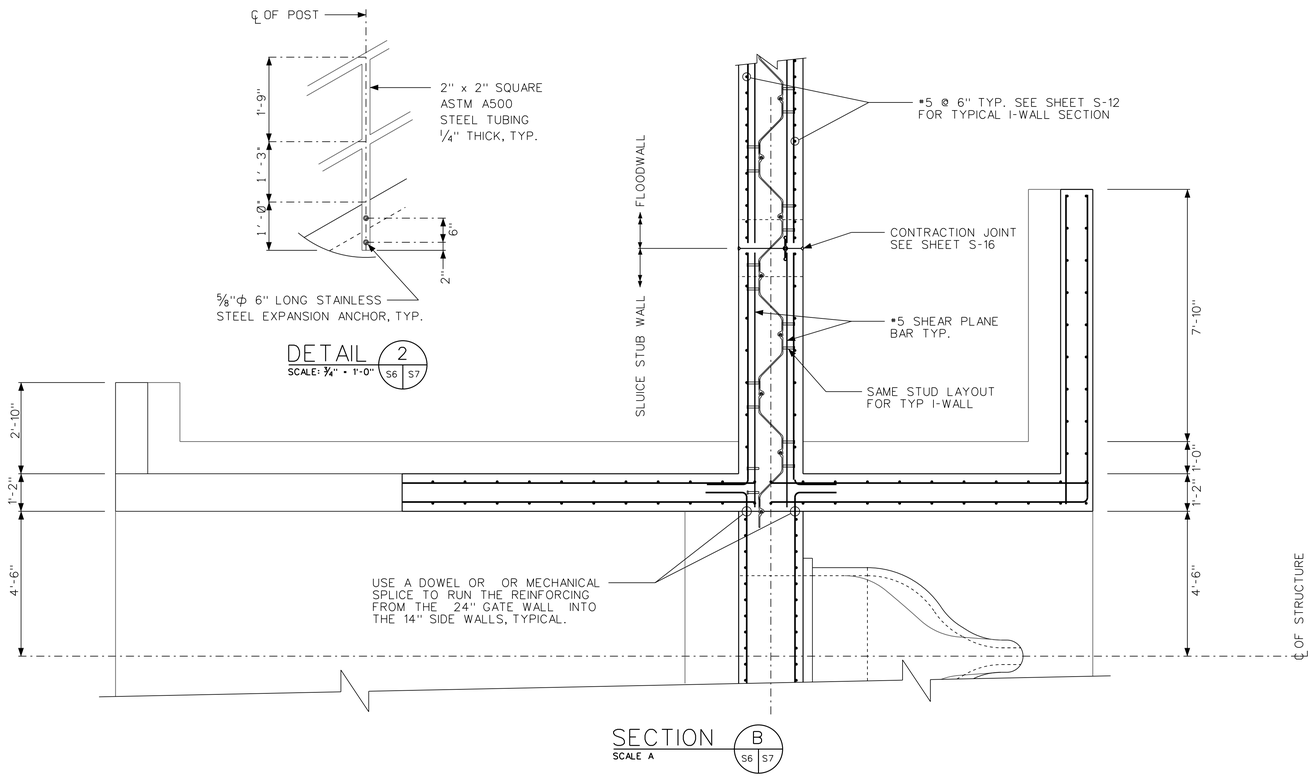

NOTES:

1. ALL REINFORCING CLEAR COVER SHALL BE 2" TYP ON MEMBERS 12" THICK OR LESS AND SHALL BE 3" TYP ON MEMBERS GREATER THAN 12" THICK UNLESS OTHERWISE NOTED.

2. HOT DIP GALVANIZE ALL METAL FABRICATIONS, EXCEPT FOR ALUMINUM ITEMS, AFTER FABRICATION UNLESS OTHERWISE NOTED. FIELD VERIFY ALL DIMENSIONS PRIOR TO FABRICATION.

3. SEE SHEET S-22 FOR STANDARD CONSTRUCTION DETAILS.

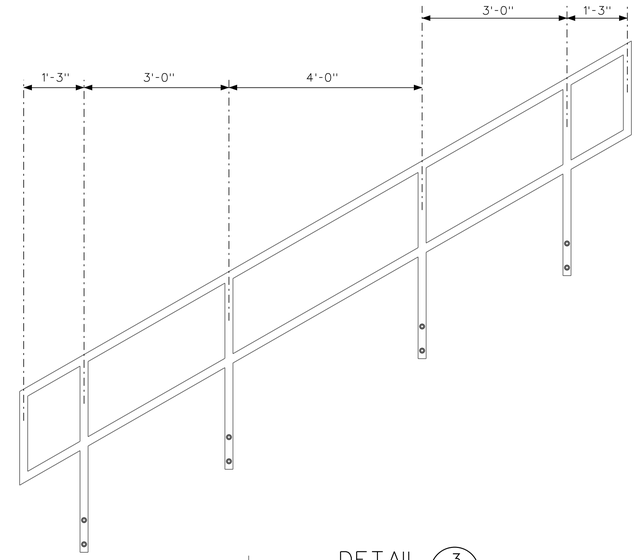

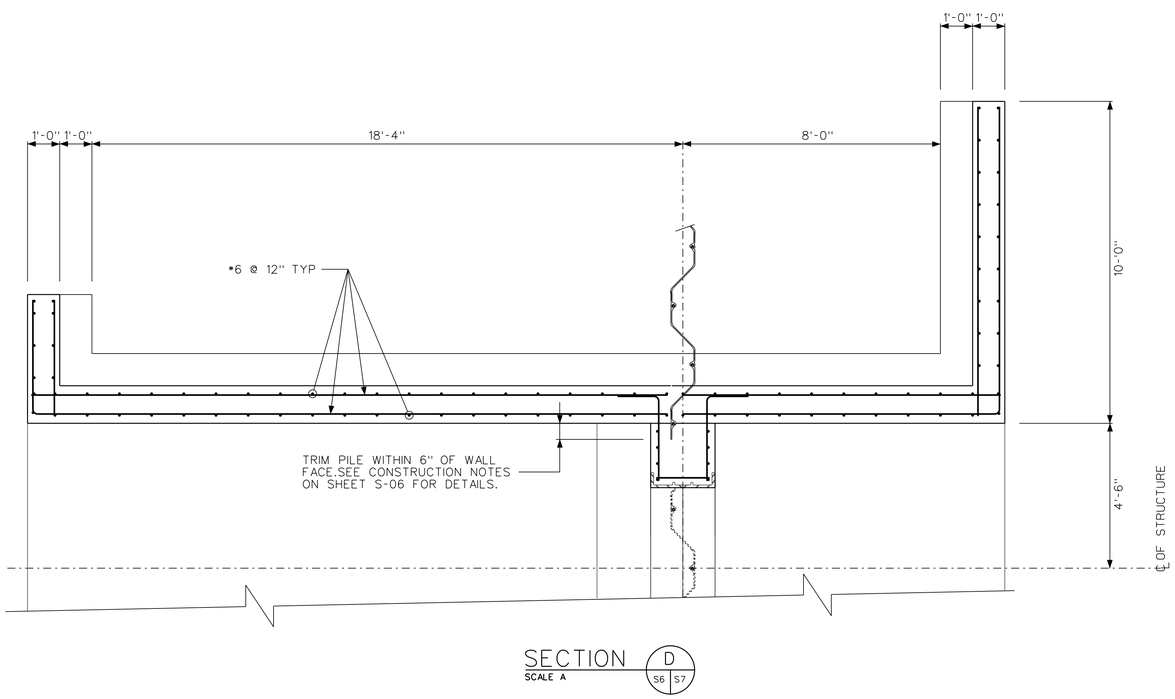

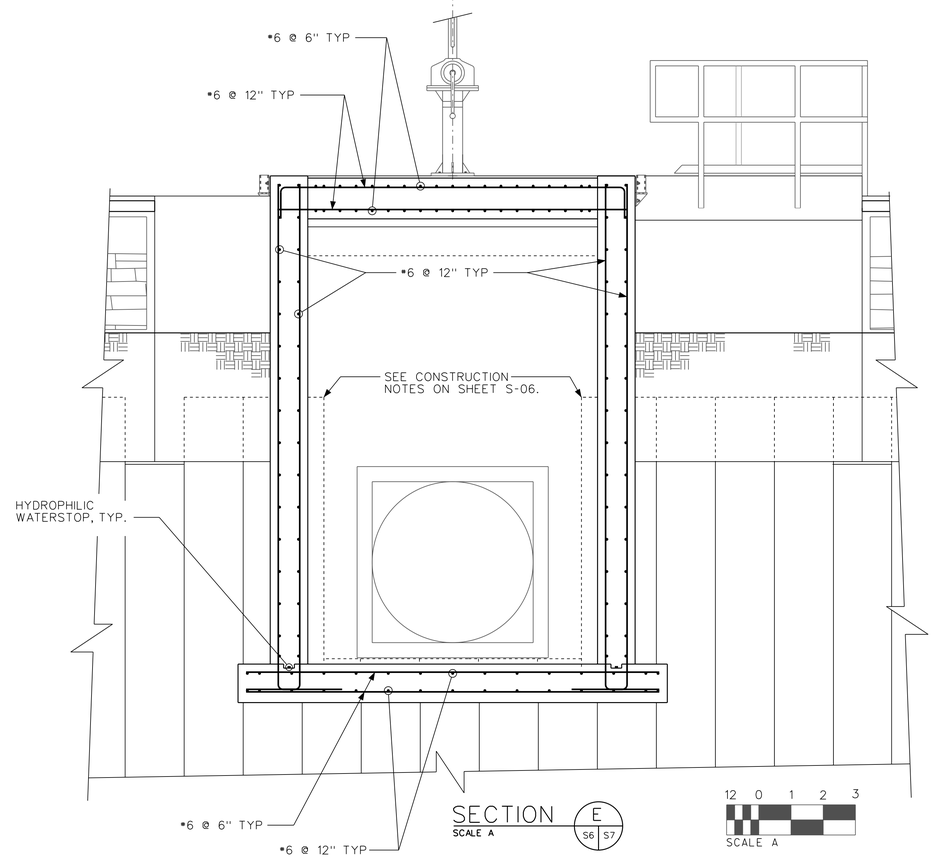

US Army Corps of Engineers Chicago District

SYMBOL	AMENDMENT DESCRIPTION	DATE	APPROVED	SYMBOL	DESCRIPTION	DATE	APPROVED

DESIGNED BY: EGS
DATE: FEBRUARY 2009
DRAWN BY: EGS
SCALE: AS SHOWN
CHECKED BY: JJS
SOLICITATION NUMBER: W912P6-09-B-0002
STEPHEN TREHARNE, P.E. 7/31/08
SUBMITTED BY:
DATE:

U.S. ARMY ENGINEER DISTRICT
CORPS OF ENGINEERS
CHICAGO, ILLINOIS

LITTLE CALUMET RIVER, INDIANA
LOCAL FLOOD PROTECTION
STAGE VII - FLOODWALL
NORTHCOTE 60" GATED SLUICE
STRUTURE SECTIONS AND DETAILS

SHEET REFERENCE NUMBER:
S-07
SHEET 57 OF 79

PLOT DATE: 2/6/2009
FILENAME: C:\Documents and Settings\h6tesegs\My Documents\D Drive\working\dms32217\LCS7_S-07FN.dgn

LCS7_S-07FN.dgn 2/6/2009 2:15:14 PM

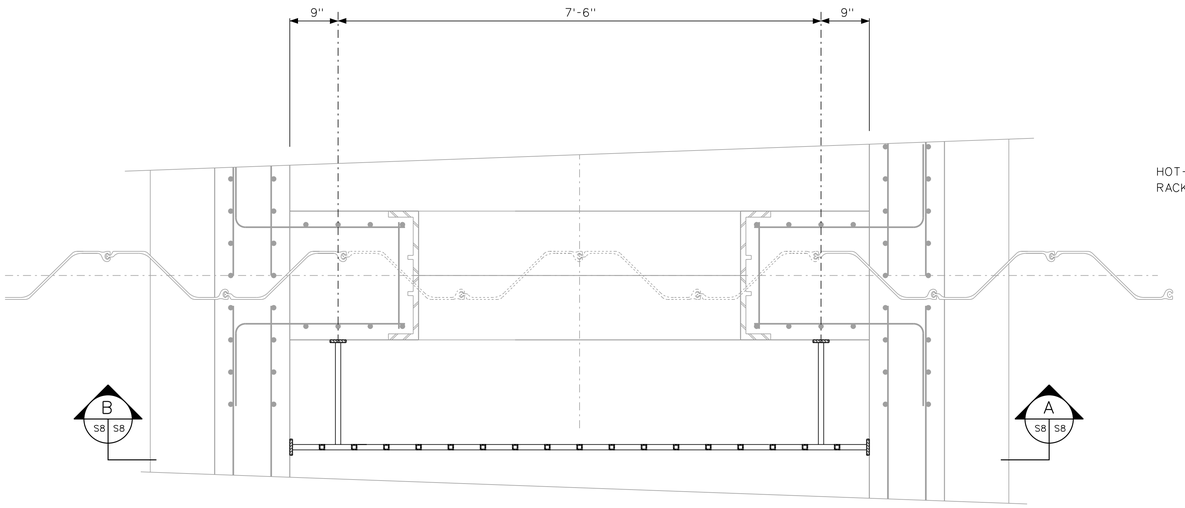

SECTION A
SCALE A

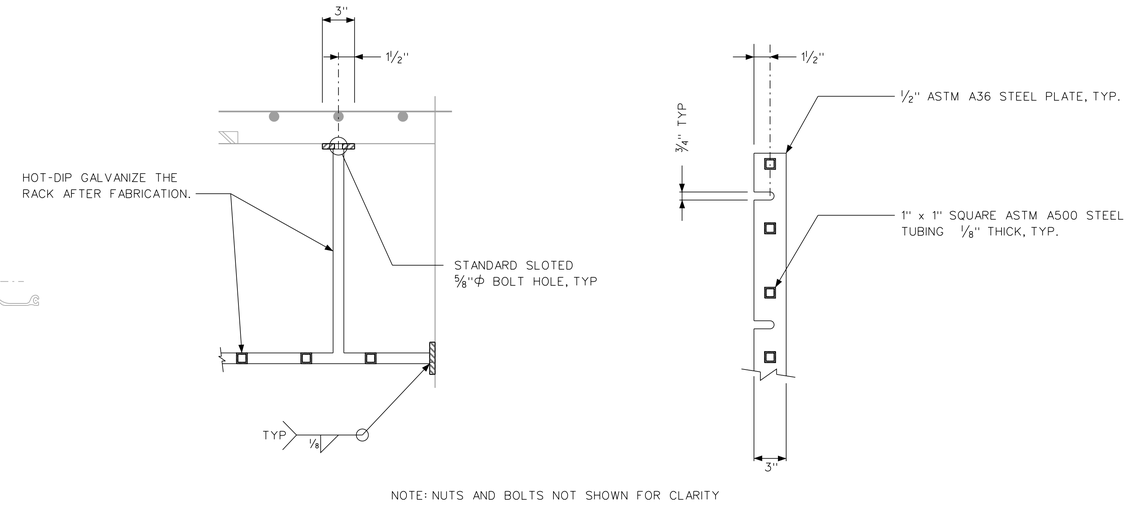

NOTE: NUTS AND BOLTS NOT SHOWN FOR CLARITY

SECTION D
SCALE A

SECTION E
SCALE A

NOTE: GATES NOT SHOWN FOR CLARITY.

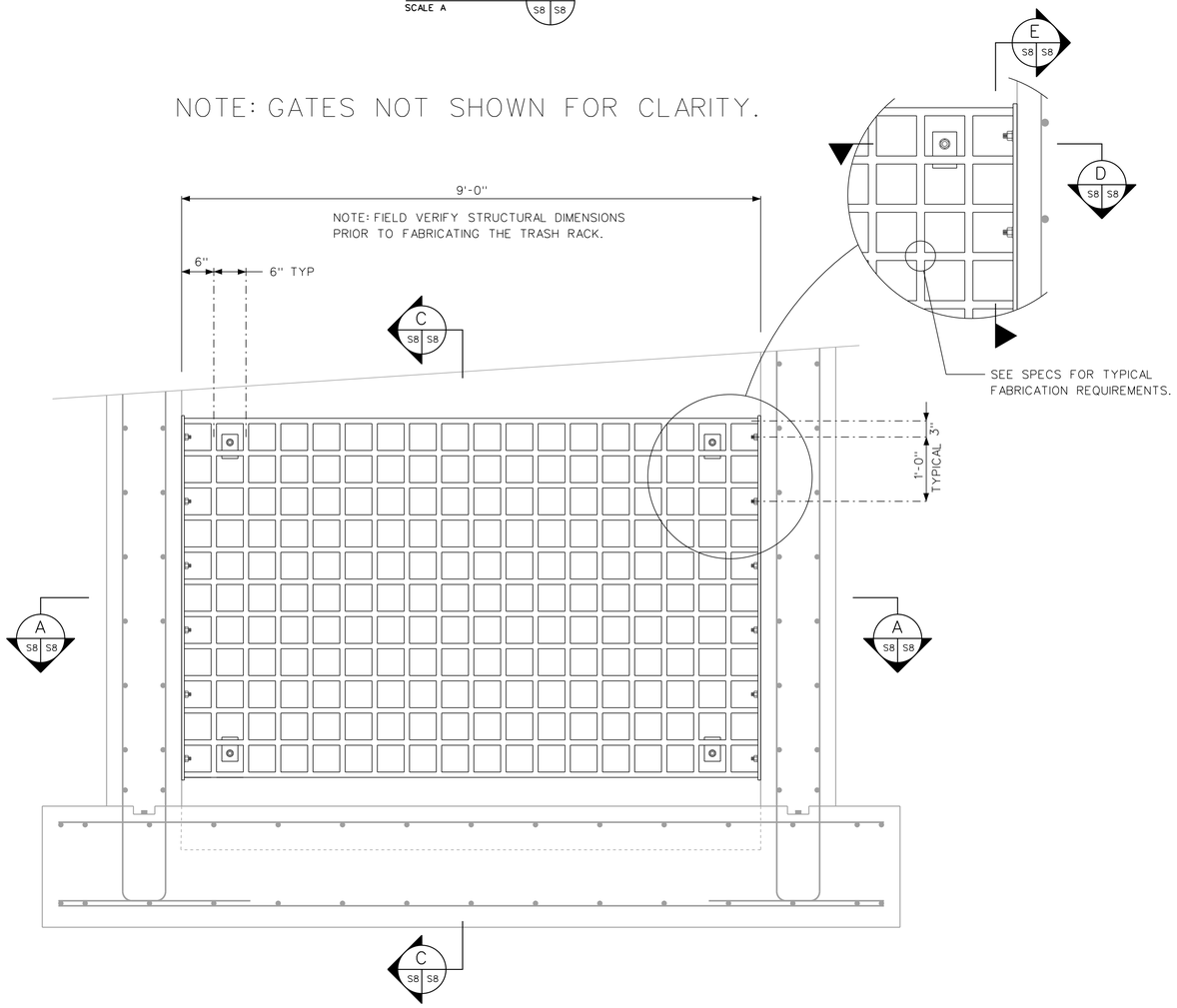

SECTION B
SCALE A

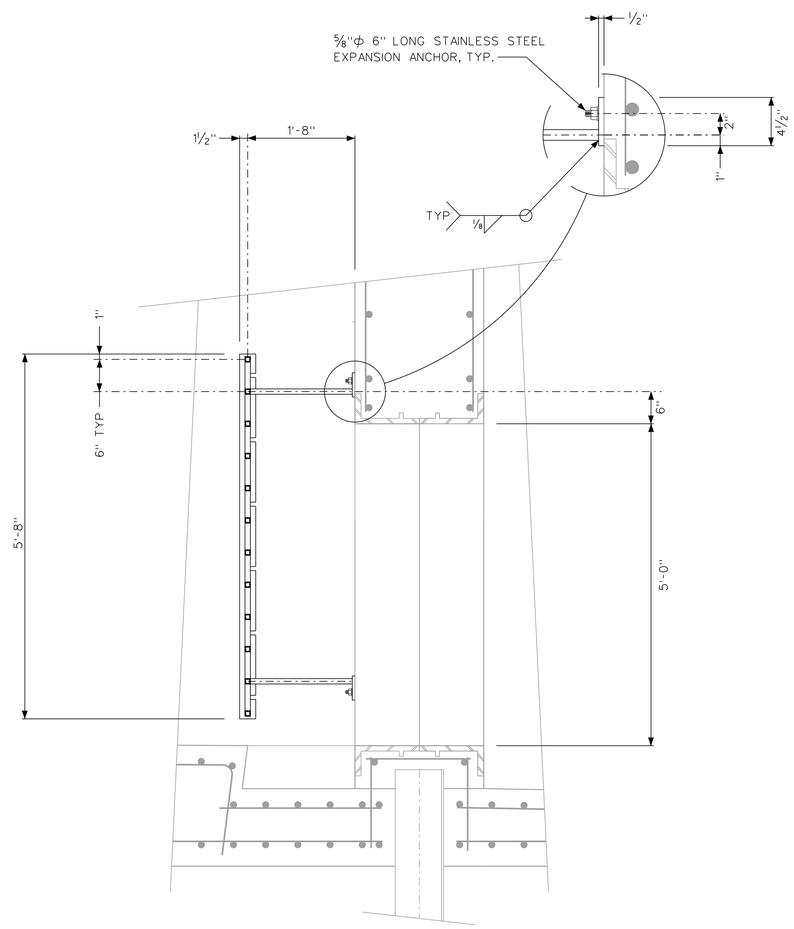

SECTION C
SCALE A

12 0 1 2 3
SCALE A

US Army Corps of Engineers
Chicago District

SYMBOL	AMENDMENT DESCRIPTION	DATE	APPROVED	SYMBOL	DESCRIPTION	DATE	APPROVED

DESIGNED BY: EGS
DATE: FEBRUARY 2009
DRAWN BY: EGS
SCALE: AS SHOWN
CHECKED BY: JJS
SOLICITATION NUMBER: W912P6-09-B-0002
STEPHEN TREHARNE, P.E. 7/31/08
SUBMITTED BY:
DATE:

U.S. ARMY ENGINEER DISTRICT
CORPS OF ENGINEERS
CHICAGO, ILLINOIS

LITTLE CALUMET RIVER, INDIANA
LOCAL FLOOD PROTECTION
STAGE VII - FLOODWALL

60" NORTHCOTE SLUICE
SAFETY SCREEN TRASH RACK
DETAILS

SHEET REFERENCE NUMBER:
S-08
SHEET 58 OF 79

PLOT DATE: 2/6/2009
FILENAME: C:\Documents and Settings\h6tesegs\My Documents\D Drive\working\dms32217\LCS7_S-08FN.dgn

LCS7_S-08FN.dgn 2/6/2009 2:18:18 PM

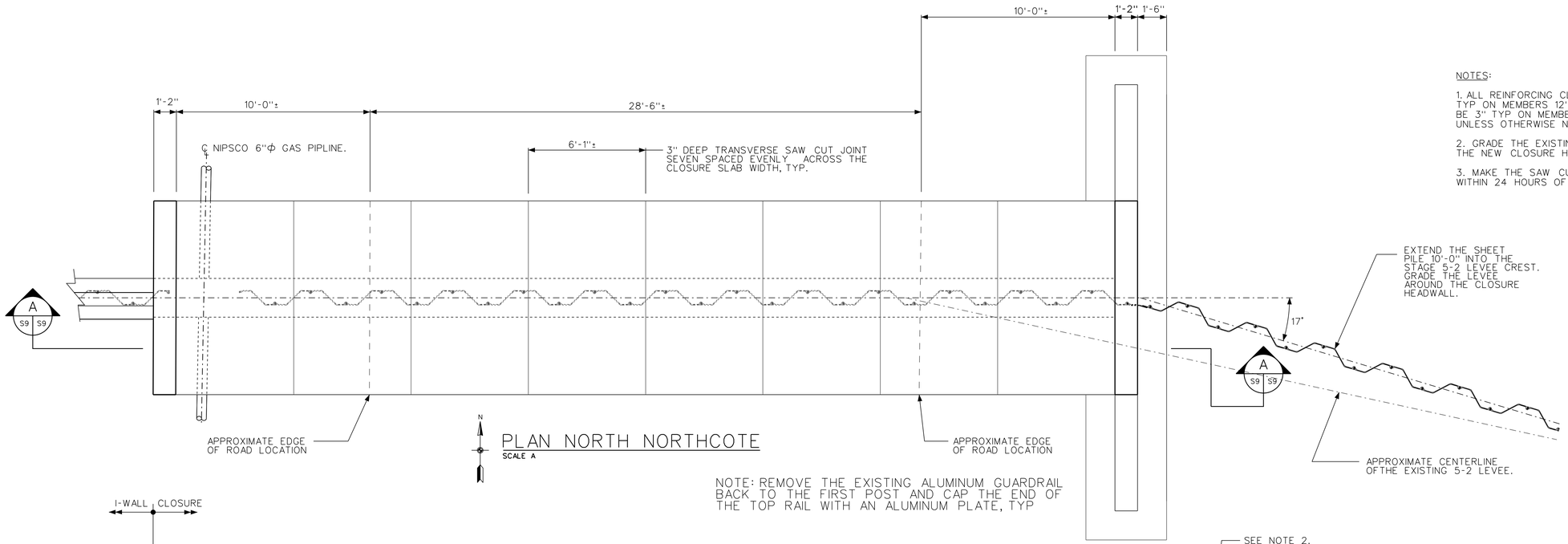

PLAN NORTH NORTHCOTE
SCALE A

NOTES:

1. ALL REINFORCING CLEAR COVER SHALL BE 2" TYP ON MEMBERS 12" THICK OR LESS AND SHALL BE 3" TYP ON MEMBERS GREATER THAN 12" THICK UNLESS OTHERWISE NOTED.

2. GRADE THE EXISTING 5-2 DOWN TO AND AROUND THE NEW CLOSURE HEADWALL, TYP.

3. MAKE THE SAW CUTS IN THE NEW CONCRETE WITHIN 24 HOURS OF PLACEMENT.

NOTE: REMOVE THE EXISTING ALUMINUM GUARDRAIL BACK TO THE FIRST POST AND CAP THE END OF THE TOP RAIL WITH AN ALUMINUM PLATE, TYP

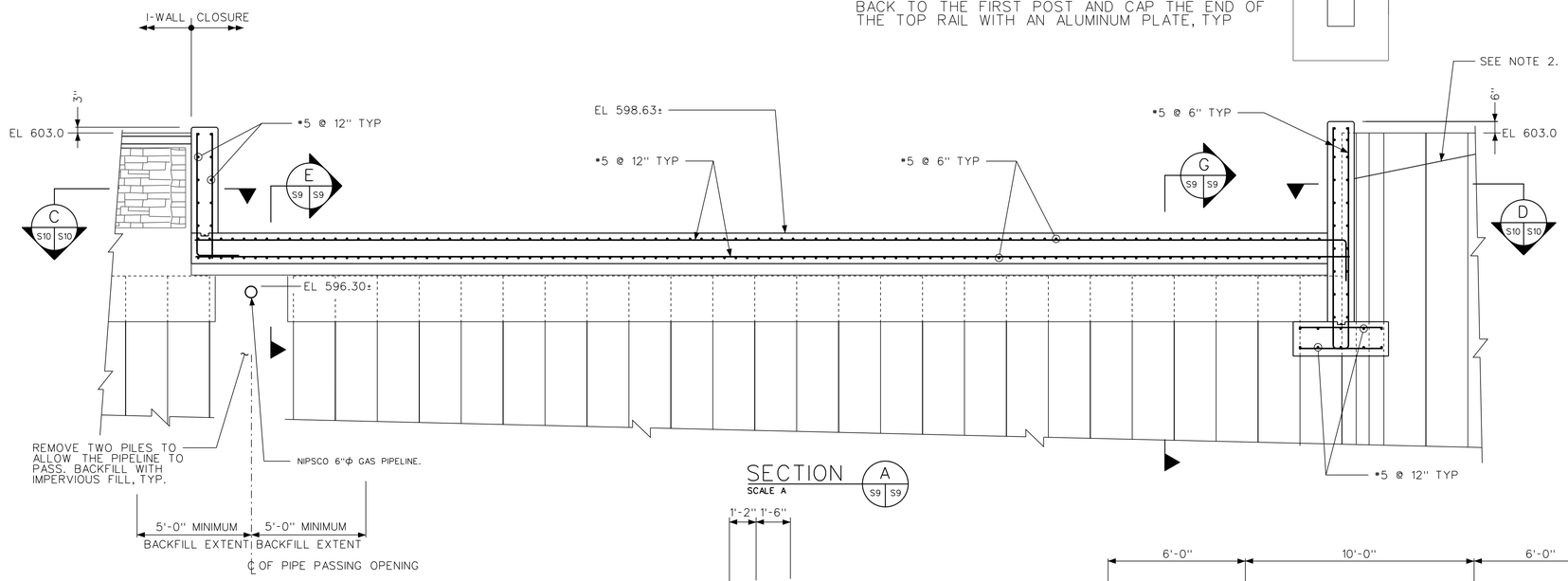

SECTION A
SCALE A

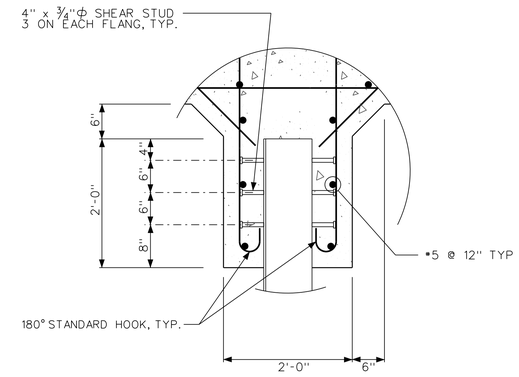

DETAIL 2 2
NTS S9 S9 S9A S9

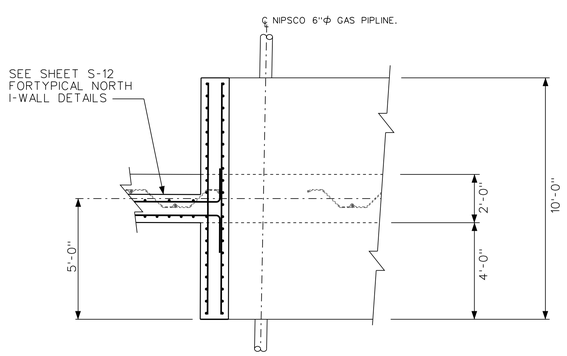

SECTION C
SCALE A

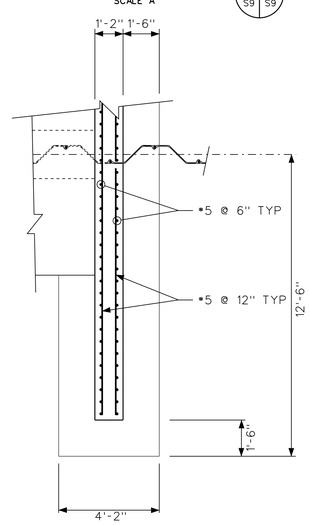

SECTION D
SCALE A

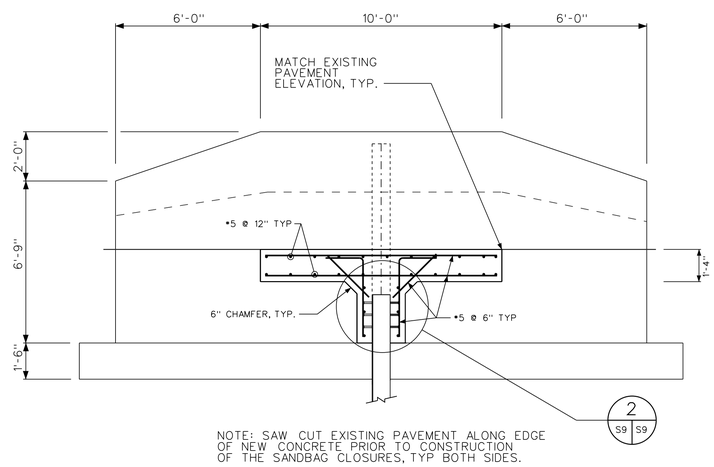

NOTE: SAW CUT EXISTING PAVEMENT ALONG EDGE OF NEW CONCRETE PRIOR TO CONSTRUCTION OF THE SANDBAG CLOSURES, TYP BOTH SIDES.

SECTION G
SCALE A

12 0 1 2 3
SCALE A

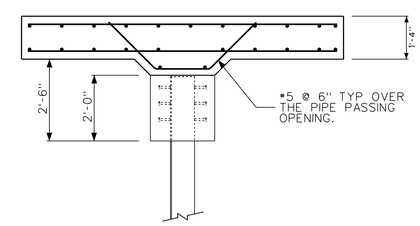

SECTION E
NTS

US Army Corps of Engineers
Chicago District

SYMBOL	AMENDMENT DESCRIPTION	DATE APPROVED	SYMBOL	DESCRIPTION	DATE APPROVED

DESIGNED BY: EGS	DATE: FEBRUARY 2009	
DRAWN BY: EGS	SCALE: AS SHOWN	
CHECKED BY: JJS	SOLICITATION NUMBER: W912P6-09-B-0002	
SUBMITTED BY: STEPHEN TRECHARNE, P.E.	DATE: 7/31/08	

U.S. ARMY ENGINEER DISTRICT
CORPS OF ENGINEERS
CHICAGO, ILLINOIS

LITTLE CALUMET RIVER, INDIANA
LOCAL FLOOD PROTECTION
STAGE VII - FLOODWALL

SANDBAG CLOSURES
NORTH NORTHCOTE
PLAN AND SECTIONS

SHEET REFERENCE NUMBER:
S-09
SHEET 59 OF 79

PLOT DATE: 2/17/2009
FILENAME: C:\Documents and Settings\h6lesegg\My Documents\D Drive\working\dms32217\LCS7_S-09FN.dgn

LCS7_S-09FN.dgn 2/17/2009 8:04:55 AM

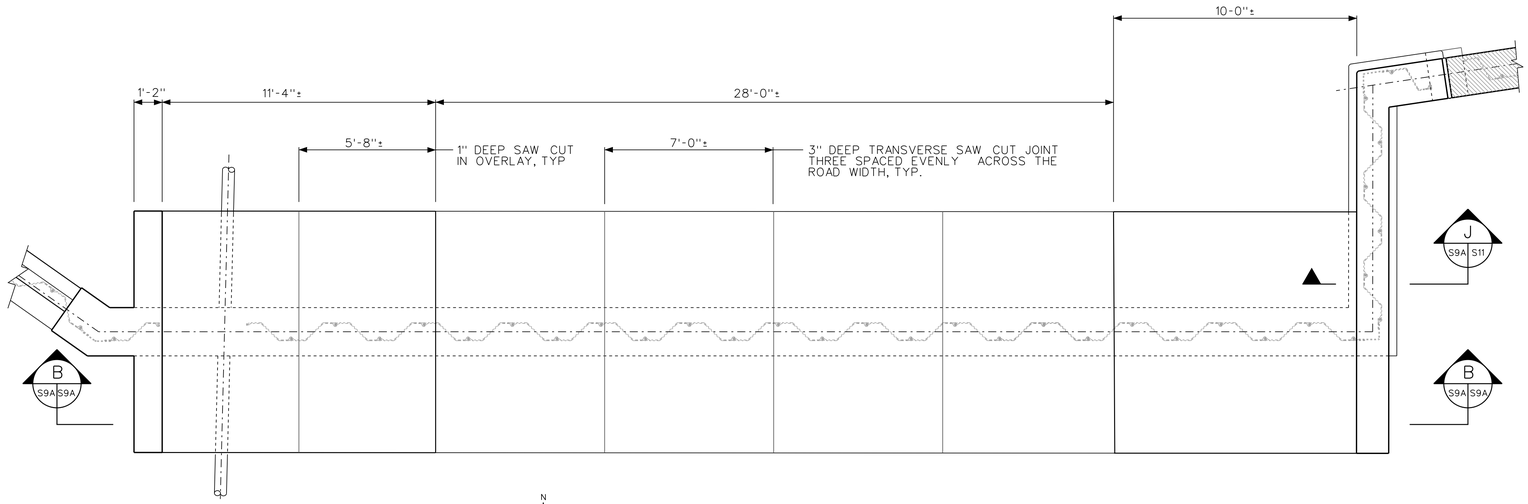

PLAN SOUTH NORTHCOTE
SCALE A

NOTES:

1. ALL REINFORCING CLEAR COVER SHALL BE 2" TYP ON MEMBERS 12" THICK OR LESS AND SHALL BE 3" TYP ON MEMBERS GREATER THAN 12" THICK UNLESS OTHERWISE NOTED.

2. MAKE THE SAW CUTS IN THE NEW CONCRETE WITHIN 24 HOURS OF PLACEMENT.

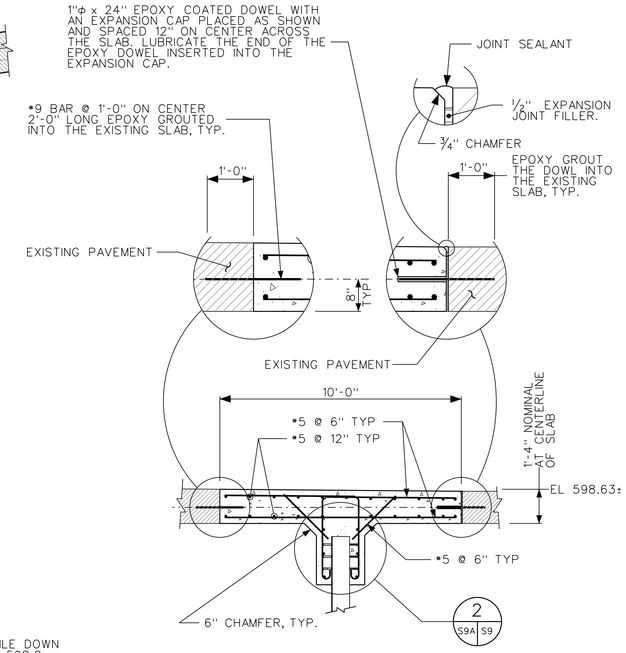

NOTE: SAW CUT EXISTING PAVEMENT ALONG EDGE OF NEW CONCRETE PRIOR TO CONSTRUCTION OF THE SANDBAG CLOSURES, TYP BOTH SIDES.

SECTION H
SCALE A

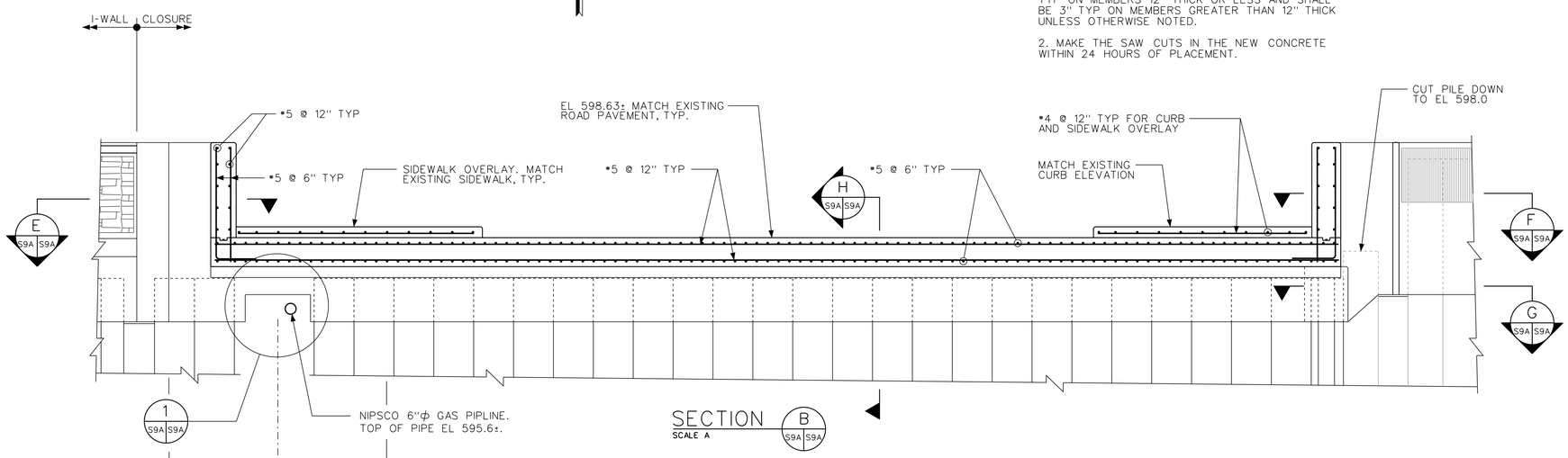

SECTION B
SCALE A

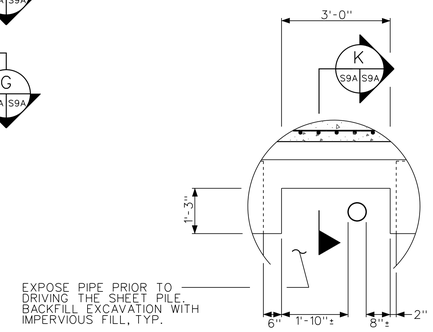

DETAIL 1
NTS

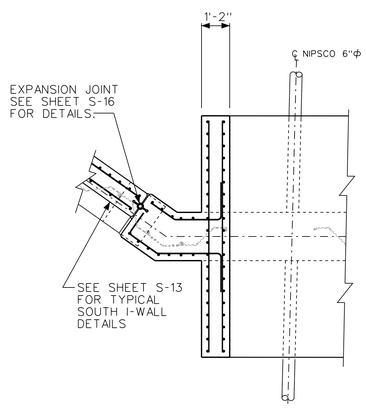

SECTION E
SCALE A

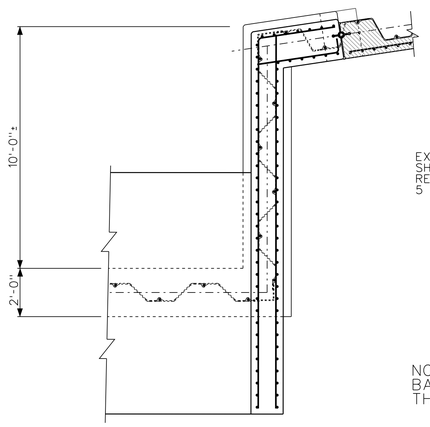

SECTION F
SCALE A

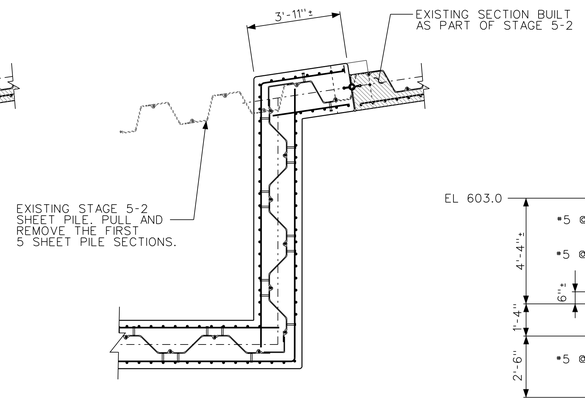

NOTE: REMOVE THE EXISTING ALUMINUM GUARDRAIL BACK TO THE FIRST POST AND CAP THE END OF THE TOP RAIL WITH AN ALUMINUM PLATE, TYP

SECTION G
SCALE A

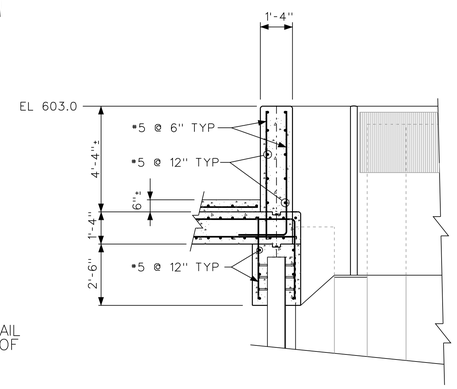

SECTION J
SCALE A

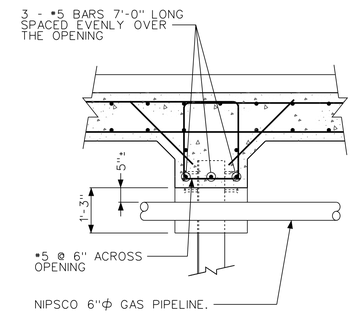

SECTION K
NTS

12 0 1 2 3
SCALE A

US Army Corps of Engineers
Chicago District

SYMBOL	AMENDMENT DESCRIPTION	DATE APPROVED	SYMBOL	DESCRIPTION	DATE APPROVED

DESIGNED BY: EGS
DATE: FEBRUARY 2009
DRAWN BY: EGS
SCALE: AS SHOWN
CHECKED BY: JJS
SOLICITATION NUMBER: W912P6-09-B-0002
SUBMITTED BY: STEPHEN TREHARNE, P.E.
DATE: 7/31/08

U.S. ARMY ENGINEER DISTRICT
CORPS OF ENGINEERS
CHICAGO, ILLINOIS

LITTLE CALUMET RIVER, INDIANA
LOCAL FLOOD PROTECTION
STAGE VII - FLOODWALL

SANDBAG CLOSURES
SOUTH NORTHCOTE
PLAN AND SECTIONS

SHEET REFERENCE NUMBER:
S-09A
SHEET 60 OF 79

PLOT DATE: 2/6/2009
FILENAME: C:\Documents and Settings\H6tesergs\My Documents\D Drive\working\dms32217\LCS7_S-09AFN.dgn

LCS7_S-09AFN.dgn 2/6/2009 2:22:58 PM

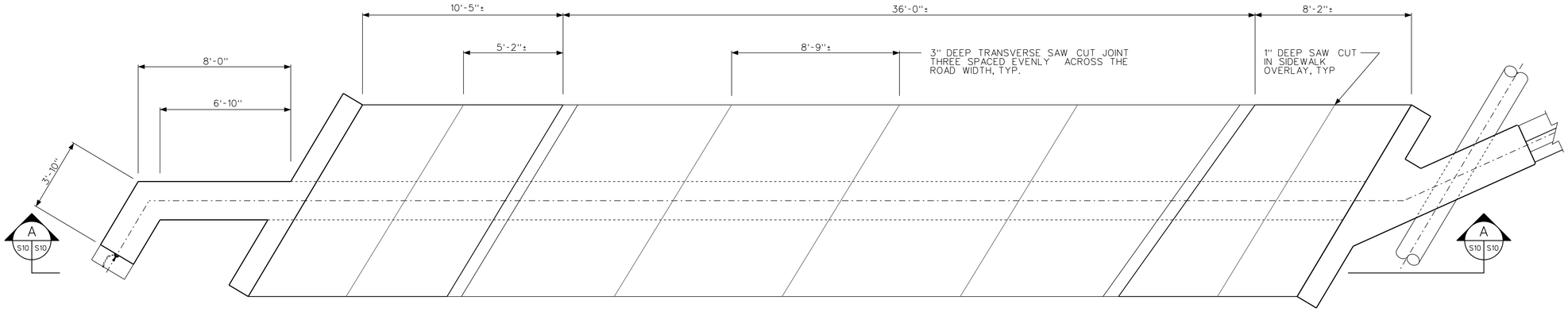

PLAN NORTH COLUMBIA
SCALE A

NOTES:

1. ALL REINFORCING CLEAR COVER SHALL BE 2" TYP ON MEMBERS 12" THICK OR LESS AND SHALL BE 3" TYP ON MEMBERS GREATER THAN 12" THICK UNLESS OTHERWISE NOTED.

2. FIELD VERIFY BOTH THE NORTH AND SOUTH SIDE LOCATION OF THE 16 INCH WATER MAIN PRIOR TO CONSTRUCTION OF THE SANDBAG CLOSURES.

3. MAKE THE SAW CUTS IN THE NEW CONCRETE WITHIN 24 HOURS OF PLACEMENT.

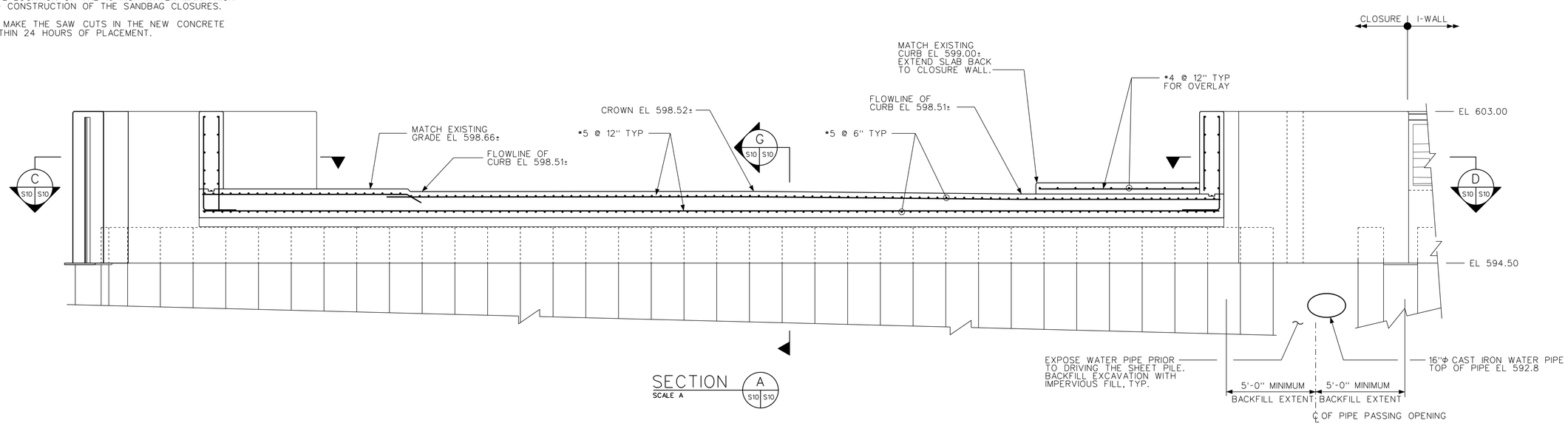

SECTION A
SCALE A

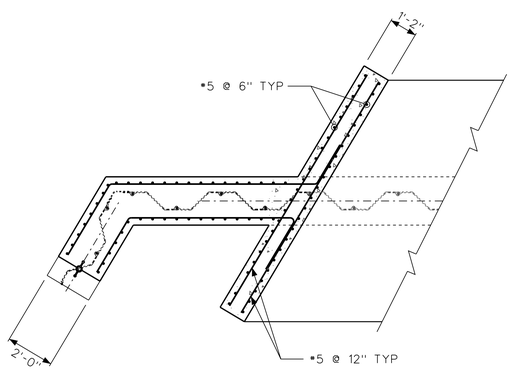

SECTION C
SCALE A

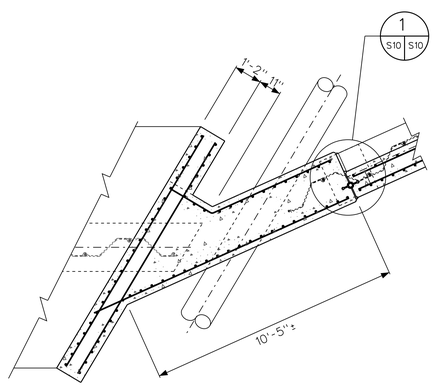

SECTION D
SCALE A

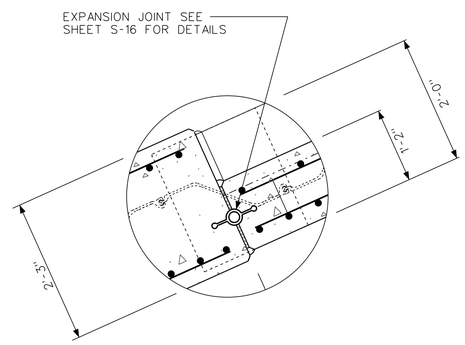

DETAIL 1
NTS

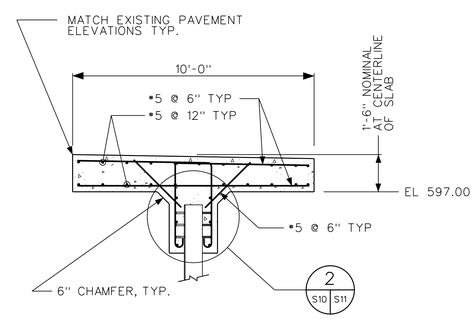

NOTE: SAW CUT EXISTING PAVEMENT ALONG EDGE OF NEW CONCRETE PRIOR TO CONSTRUCTION OF THE SANDBAG CLOSURES, TYP BOTH SIDES.

SECTION G
SCALE A

SCALE A

US Army Corps of Engineers
Chicago District

SYMBOL	AMENDMENT DESCRIPTION	DATE APPROVED	SYMBOL	DESCRIPTION	DATE APPROVED

DESIGNED BY: EGS | DATE: FEBRUARY 2009
DRAWN BY: EGS | SCALE: AS SHOWN
CHECKED BY: JJS | SOLICITATION NUMBER: W912P6-09-B-0002
SUBMITTED BY: STEPHEN TRECHARNE, P.E. | DATE: 7/31/08

U.S. ARMY ENGINEER DISTRICT
CORPS OF ENGINEERS
CHICAGO, ILLINOIS

LITTLE CALUMET RIVER, INDIANA
LOCAL FLOOD PROTECTION
STAGE VII - FLOODWALL

SANDBAG CLOSURES
NORTH COLUMBIA
PLAN AND SECTIONS

SHEET REFERENCE NUMBER:
S-10
SHEET 61 OF 79

PLOT DATE: $DATE$
FILENAME: $FILENAME$

LCS7_S-10FN.dgn 2/9/2009 8:34:19 AM

NOTES:

1. ALL REINFORCING CLEAR COVER SHALL BE 2" TYP ON MEMBERS 12" THICK OR LESS AND SHALL BE 3" TYP ON MEMBERS GREATER THAN 12" THICK UNLESS OTHERWISE NOTED.

2. FIELD VERIFY BOTH THE NORTH AND SOUTH SIDE LOCATION OF THE 16 INCH WATER MAIN PRIOR TO CONSTRUCTION OF THE SANDBAG CLOSURES.

3. MAKE THE SAW CUTS IN THE NEW CONCRETE WITHIN 24 HOURS OF PLACEMENT.

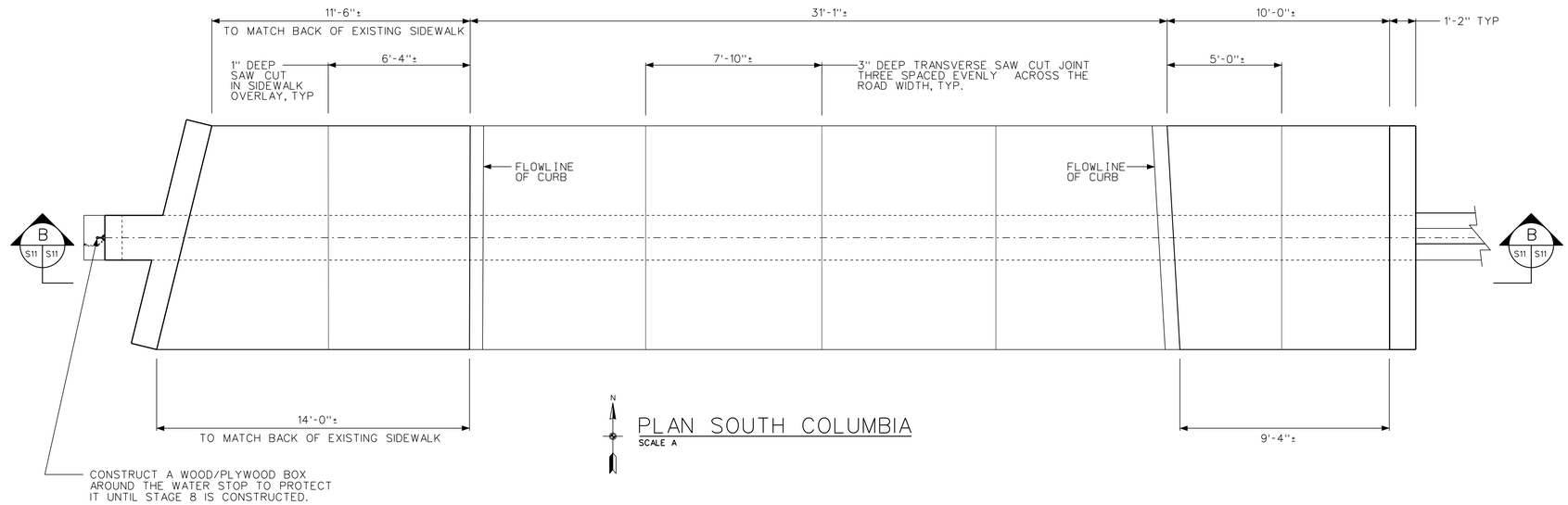

PLAN SOUTH COLUMBIA
SCALE A

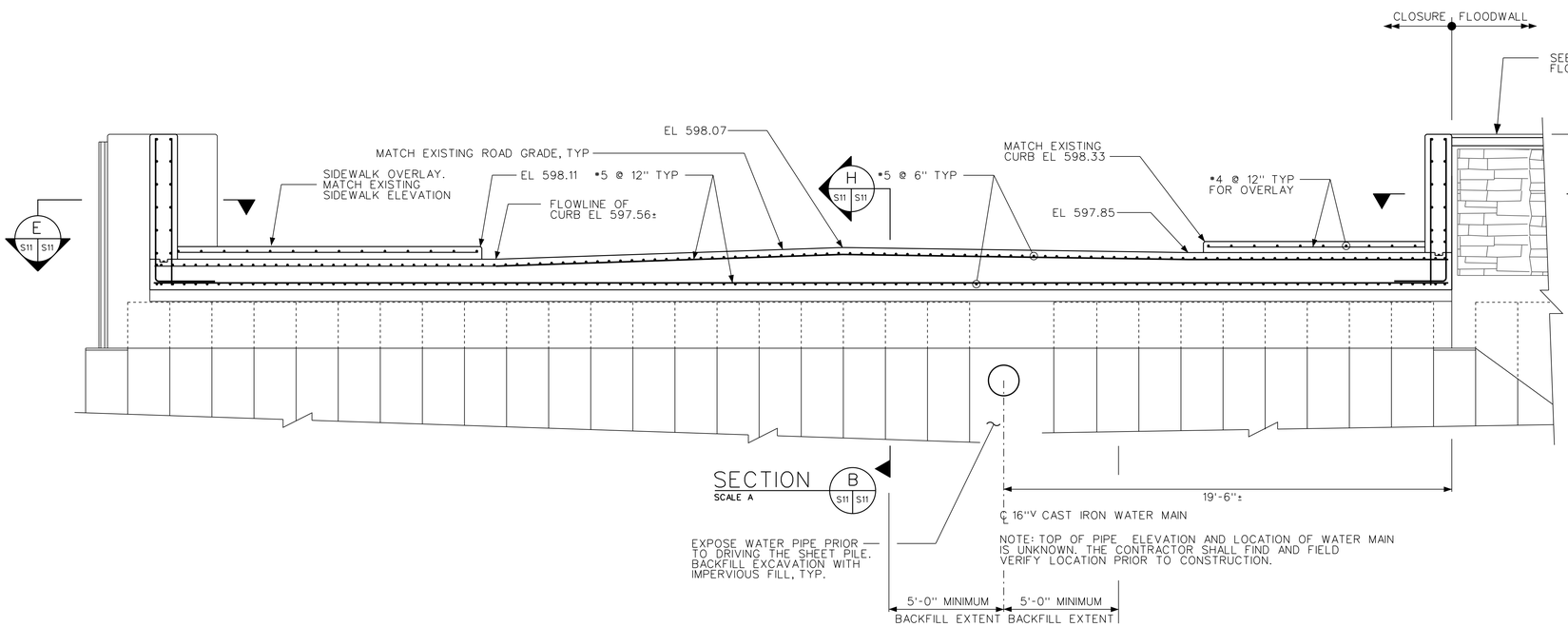

SECTION B
SCALE A

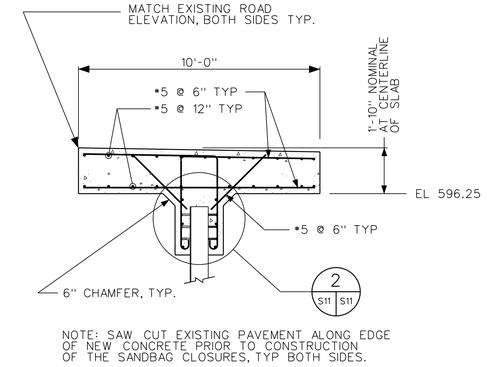

SECTION H
SCALE A

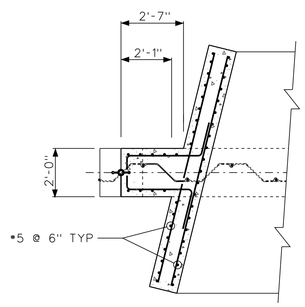

SECTION E
SCALE A

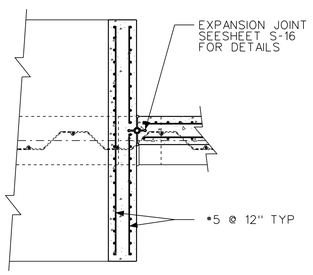

SECTION F
SCALE A

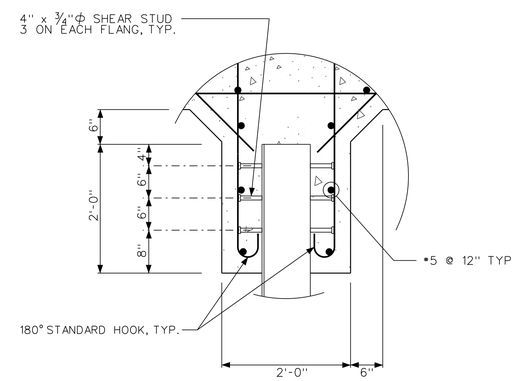

DETAIL 2 2
SCALE A

12 0 1 2 3
SCALE A

US Army Corps of Engineers Chicago District

SYMBOL	AMENDMENT DESCRIPTION	DATE	APPROVED	SYMBOL	DESCRIPTION	DATE	APPROVED

DESIGNED BY: EGS
DATE: FEBRUARY 2009
DRAWN BY: EGS
SCALE: AS SHOWN
CHECKED BY: JJS
SOLICITATION NUMBER: W912P6-09-B-0002
SUBMITTED BY: STEPHEN TREHARNE, P.E. 7/31/08
DATE:

U.S. ARMY ENGINEER DISTRICT
CORPS OF ENGINEERS
CHICAGO, ILLINOIS

LITTLE CALUMET RIVER, INDIANA
LOCAL FLOOD PROTECTION
STAGE VII - FLOODWALL

SANDBAG CLOSURES
SOUTH COLUMBIA
PLAN AND SECTIONS

SHEET REFERENCE NUMBER:
S-11

PLOT DATE: 2/6/2009
FILENAME: C:\Documents and Settings\h6tesegs\My Documents\D Drive\working\dms32217\LCS7_S-11FN.dgn

LCS7_S-11FN.dgn 2/6/2009 2:27:46 PM

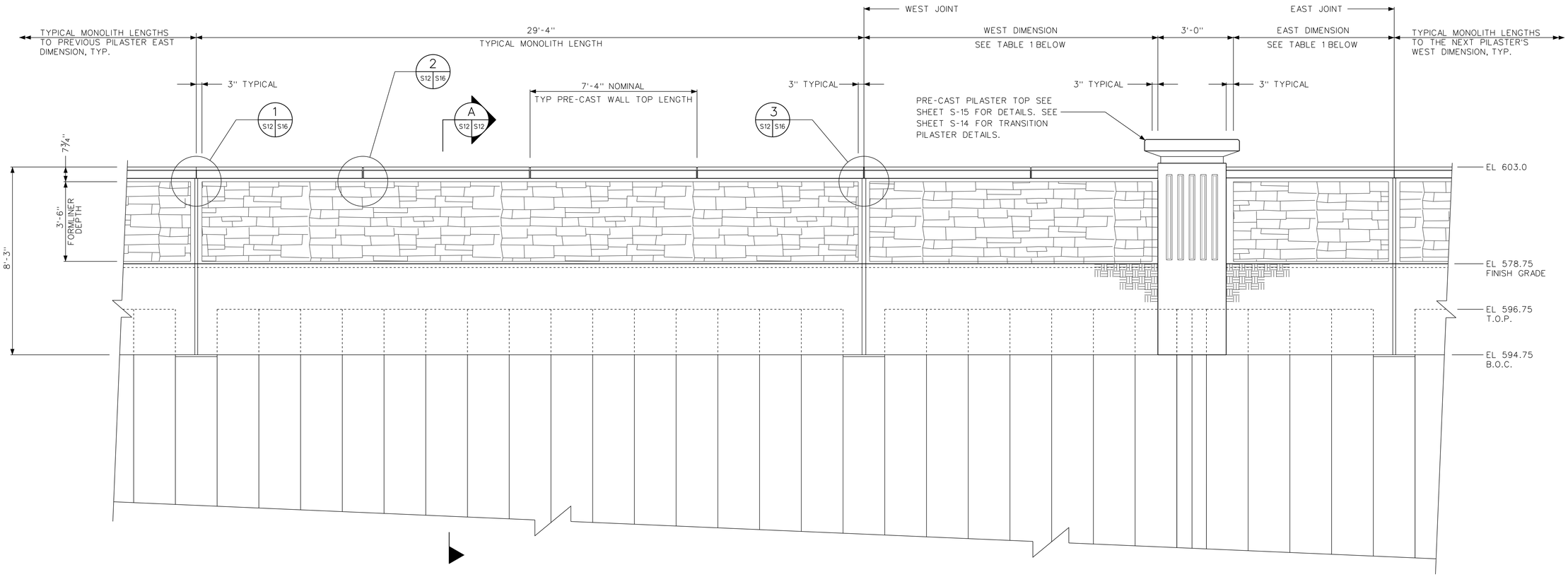

TYPICAL NORTH ELEVATION DETAILS

SCALE A

NOTES:

1. ALL FLOODWALL CLEAR COVER 3" UNLESS OTHERWISE NOTED.
2. SEE SHEET S-14 FOR FOR SHEET PILE TIP ELEVATION TRANSITIONS DETAILS.
3. THE TYPICAL JOINT PROGRESSION IS EJ-CJ-CJ.

TABLE 1: PILASTER SPACING AND JOINT INFORMATION

Pilaster Number	Approximate Station	West Dimension	East Dimension	West Joint	East Joint	Civil Sheet Reference	NOTES
N1	7N 0+98.75	3'-8"	14'-9"	CJ	CJ	C-10	THE 30" GATEWELL IS BETWEEN THE N1 AND THE BEND. SEE SHEETS S-01 AND S-02 FOR DETAILS
BEND	7N 1+16.69	1'-11"	16'-3"	CJ	EJ	C-10	
N2	7N 4+66.44	9'-5"	14'-10"	CJ	EJ	C-10	
N3	7N 6+73.13	13'-0"	11'-2"	EJ	CJ	C-10	
N4	7N 7+88.15	13'-0"	14'-10"	CJ	CJ	C-10	
N5	7N 8+77.50	13'-0"	14'-10"	CJ	CJ	C-10	
N6	7N 9+66.83	13'-0"	14'-10"	CJ	CJ	C-10	
N7	7N 10+26.83	13'-1"	14'-10"	EJ	CJ	C-10	
N8	7N 11+12.56	9'-4"	18'-6"	EJ	CJ	C-10	
N9	7N 12+88.00	7'-7"	2'-0"	EJ	CJ	C-11	
N10	7N 15+97.44	11'-2"	5'-8"	CJ	EJ	C-11	
N11	7N 17+60.17	7'-7"	13'-0"	CJ	EJ	C-11	
N12	7N 20+53.00	13'-1"	14'-10"	EJ	CJ	C-11	
N13	7N 22+89.00	13'-0"	7'-6"	CJ	EJ	C-12	
N14	7N 24+40.00	23'-4"	3'-3"	CJ	CJ	C-12	THE WALNUT PUMP STATION OUTLET IS BETWEEN N14 AND N15. SEE SHEETS S-03 TO S-05 FOR DETAILS
N15	7N 25+98.30	23'-11"	3'-10"	EJ	CJ	C-12	
N16	7N 31+73.50	11'-3"	13'-0"	CJ	EJ	C-12	
N17	7N 33+23.50	11'-3"	13'-0"	EJ	CJ	C-13	
N18	7N 35+58.83	14'-5"	13'-0"	EJ	CJ	C-13	
N19	7N 36+13.88	14'-11"	13'-0"	CJ	EJ	C-13	
N20	7N 37+00.00	11'-2"	16'-8"	CJ	EJ	C-13	
N21	7N 38+47.59	11'-3"	13'-0"	CJ	CJ	C-13	
N22	7N 42+87.12	13'-0"	14'-10"	CJ	CJ	C-14	
N23	7N 44+35.17	13'-0"	14'-10"	EJ	CJ	C-14	
N24	7N 47+62.83	16'-9"	7'-6"	CJ	EJ	C-14	THE NORTHCOTE 60" SLUICE STRUCTURE IS BETWEEN N24 AND N25. SEE SHEETS S-06 TO S-08 FOR DETAILS
N25	7N 48+63.17	9'-5"	18'-6"	EJ	CJ	C-14	
N26	7N 51+01.00	11'-2"	9'-4"	CJ	EJ	C-14	

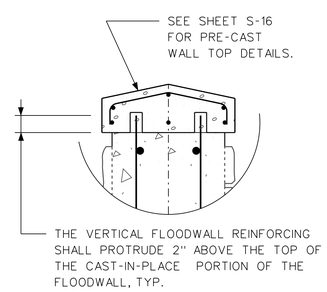

DETAIL 4 S12 S12 | 4 S13 S12 | 3 S5 S12

NTS

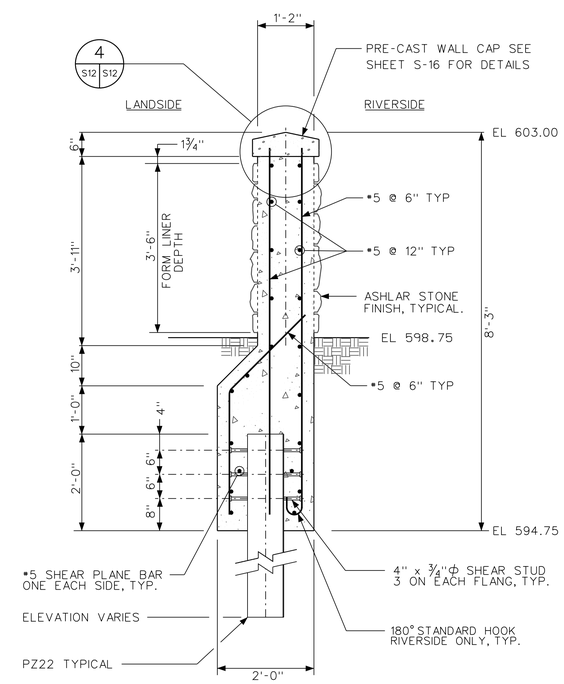

TYPICAL NORTH FLOODWALL SECTION

SCALE B

A S12 S12 | B C10 S12

12 0 1 2 3
SCALE A

12 0 1 2 3
SCALE B

US Army Corps of Engineers
Chicago District

SYMBOL	AMENDMENT DESCRIPTION	DATE APPROVED	SYMBOL	DESCRIPTION	DATE APPROVED

DESIGNED BY: EGS | DATE: FEBRUARY 2009
DRAWN BY: EGS | SCALE: AS SHOWN
CHECKED BY: JJS | SOLICITATION NUMBER: W912P6-09-B-0002
SUBMITTED BY: STEPHEN TRECHARNE, P.E. | DATE: 7/31/08

U.S. ARMY ENGINEER DISTRICT
CORPS OF ENGINEERS
CHICAGO, ILLINOIS

LITTLE CALUMET RIVER, INDIANA
LOCAL FLOOD PROTECTION
STAGE VII - FLOODWALL
NORTH FLOODWALL
TYPICAL
ELEVATION AND SECTION

SHEET REFERENCE NUMBER:
S-12
SHEET 63 OF 79

PLOT DATE: 2/6/2009
FILENAME: C:\Documents and Settings\hl6teeqs\My Documents\D Drive\working\dms32217\LCS7_S-12FN.dgn

LCS7_S-12FN.dgn 2/6/2009 2:31:11 PM

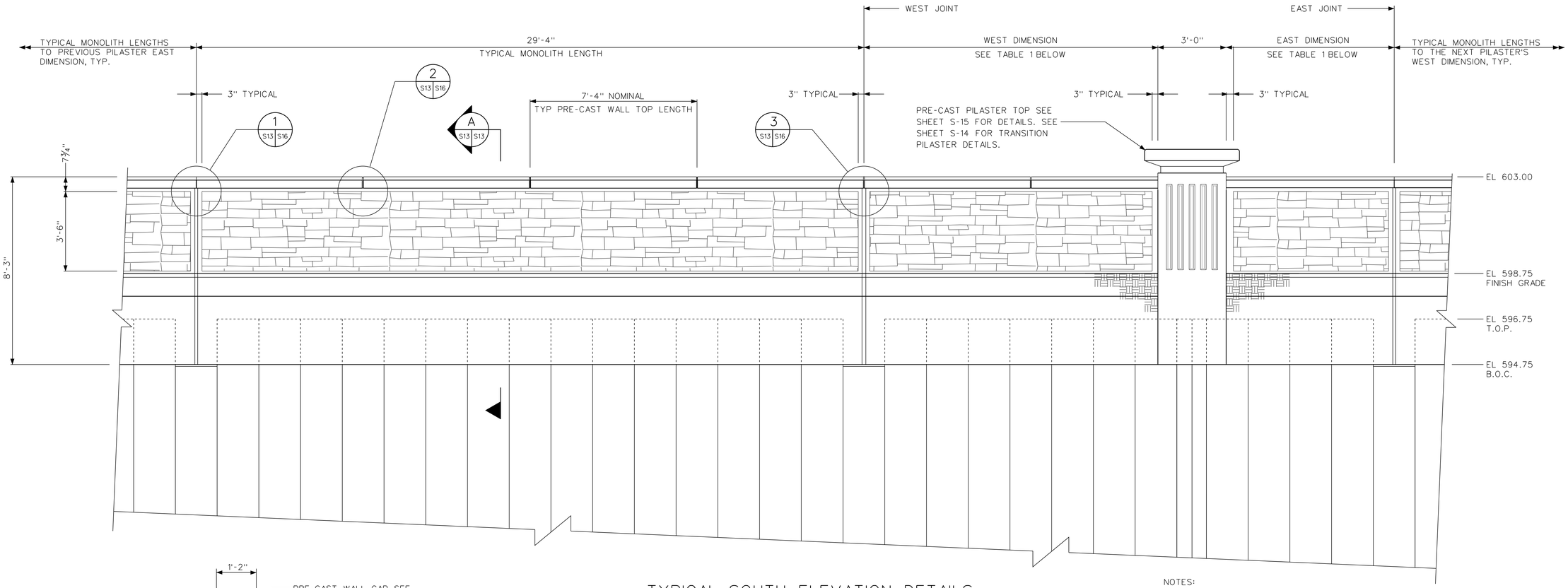

TYPICAL SOUTH ELEVATION DETAILS

SCALE A

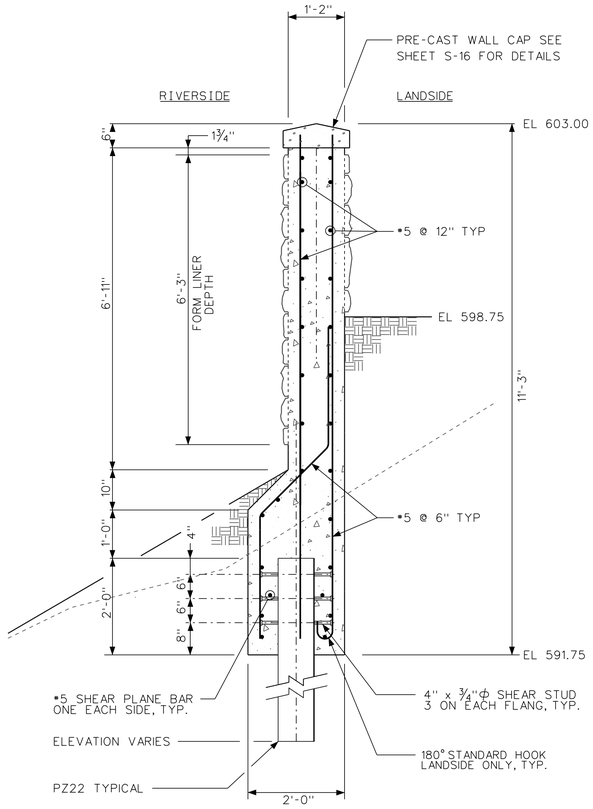

SOUTH RETAINING WALL SECTION

SCALE B

B C6 S13 | D C7 S13 | F C8 S13 | D S14 S13

TABLE 1: PILASTER SPACING AND JOINT INFORMATION

PILASTER NUMBER	APPROXIMATE STATION	WEST DIMENSION	EAST DIMENSION	WEST JOINT	EAST JOINT	CIVIL SHEET REFERENCE	NOTES
S1	7S 0+76.45	7'-11"	11'-2"	EJ	CJ	C-05	THE RAMP FLOODWALL IS BETWEEN S1 AND S2 AND THE THE RAMP RETAINING WALL IS BETWEEN S2 AND S3. SEE SHEET S-14 FOR DETAILS.
S2	7S 1+60.67	11'-0"	9'-4"	EJ	CJ	C-05	
S3	7S 2+81.20	20'-4"	14'-10"	CJ	CJ	C-05	
S4	7S 6+61.94	11'-3"	9'-3"	CJ	EJ	C-05	
S5	7S 8+96.13	16'-9"	14'-9"	CJ	CJ	C-05	
S6	7S 10+14.81	13'-1"	11'-0"	CJ	EJ	C-05	
S7	7S 11+60.80	14'-11"	16'-6"	CJ	CJ	C-05	
S8	7S 14+82.97	9'-5"	4'-1"	EJ	CJ	C-06	
S9	7S 15+70.75	22'-3"	16'-8"	EJ	CJ	C-06	
S10	7S 17+47.75	11'-2"	12'-9"	EJ	CJ	C-06	THE LINE OF PROTECTION IS A RETAINING WALL BETWEEN S10 AND S11 SEE SECTION B-C6/S13 FOR DETAILS.
S11	7S 19+06.75	25'-11"	24'-0"	CJ	EJ	C-06	
S12	7S 20+40.17	18'-7"	13'-0"	EJ	CJ	C-06	
S13	7S 23+64.08	14'-11"	12'-10"	CJ	EJ	C-07	
S14	7S 24+80.40	12'-6"	11'-5"	EJ	CJ	C-07	
S15	7S 25+68.00	14'-11"	13'-0"	EJ	CJ	C-07	
S16	7S 27+45.50	14'-11"	13'-0"	EJ	CJ	C-07	THE LINE OF PROTECTION IS A RETAINING WALL BETWEEN S16 AND S17 SEE SECTION D-C7/S13 FOR DETAILS.
S17	7S 30+95.21	11'-3"	9'-4"	EJ	CJ	C-07	
S18	7S 33+18.40	5'-9"	3'-10"	CJ	CJ	C-08	
S19	7S 34+92.08	20'-5"	18'-6"	CJ	EJ	C-08	
S20	7S 36+14.45	13'-1"	7'-5"	CJ	EJ	C-08	THE LINE OF PROTECTION IS A RETAINING WALL BETWEEN S18 AND S24 SEE SECTION F-C8/S13 FOR DETAILS.
S21	7S 37+05.49	22'-3"	13'-0"	CJ	EJ	C-08	
S22	7S 38+24.33	14'-11"	13'-0"	EJ	CJ	C-08	
S23	7S 39+10.00	11'-3"	13'-0"	EJ	CJ	C-08	
S24	7S 40+25.00	11'-3"	9'-4"	CJ	CJ	C-08	
S25	7S 44+24.22	5'-9"	11'-1"	EJ	CJ	C-09	
S26	7S 45+35.57	9'-5"	7'-5"	CJ	CJ	C-09	
S27	7S 48+55.93	16'-9"	11'-2"	EJ	CJ	C-09	
S28	7S 51+76.28	13'-1"	3'-10"	CJ	EJ	C-09	
S29	7S 52+12.25	29'-4"	4'-7"	EJ	CJ	C-09	

12 0 1 2 3
SCALE A

12 0 1 2 3
SCALE B

NOTES:

1. ALL FLOODWALL CLEAR COVER 3" UNLESS OTHERWISE NOTED.

2. SEE SHEET S-14 FOR FLOODWALL TO RETAINING WALL DETAILS AND FOR SHEET PILE TIP ELEVATION TRANSITIONS DETAILS.

3. THE TYPICAL JOINT PROGRESSION IS EJ-CJ-CJ.

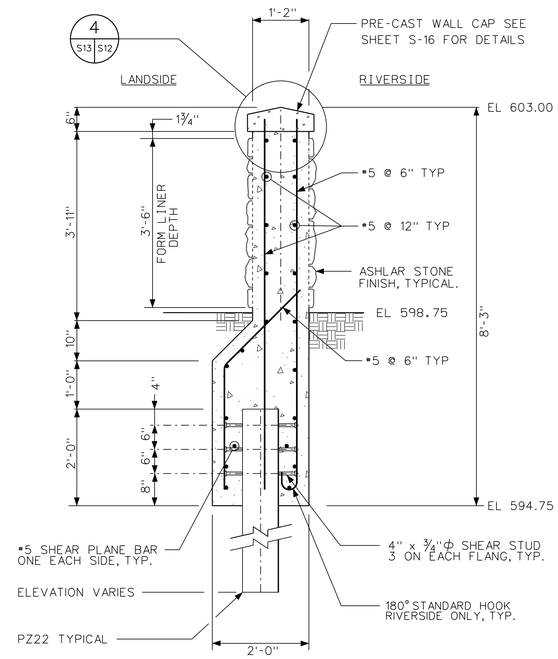

SOUTH FLOODWALL SECTION

SCALE B

A S13 S13 | A C5 S13 | C C7 S13 | E C8 S13 | G C9 S13 | C S14 S13

US Army Corps of Engineers
Chicago District

SYMBOL	AMENDMENT DESCRIPTION	DATE APPROVED	SYMBOL	DESCRIPTION	DATE APPROVED

DESIGNED BY: EGS
DRAWN BY: EGS
CHECKED BY: JJS
SUBMITTED BY: STEPHEN TRECHARNE, P.E.
DATE: FEBRUARY 2009
SCALE: AS SHOWN
SOLICITATION NUMBER: W912P6-09-B-0002
DATE: 7/31/08

U.S. ARMY ENGINEER DISTRICT
CORPS OF ENGINEERS
CHICAGO, ILLINOIS

LITTLE CALUMET RIVER, INDIANA
LOCAL FLOOD PROTECTION
STAGE VII - FLOODWALL
SOUTH FLOODWALL
TYPICAL
ELEVATION AND SECTIONS

SHEET REFERENCE NUMBER:
S-13
SHEET 64 OF 79

PLOT DATE: 2/6/2009
FILENAME: C:\Documents and Settings\h16teergs\My Documents\D Drive\working\dms32217\LCS7_S-13FN.dgn

LCS7_S-13FN.dgn 2/6/2009 2:32:58 PM

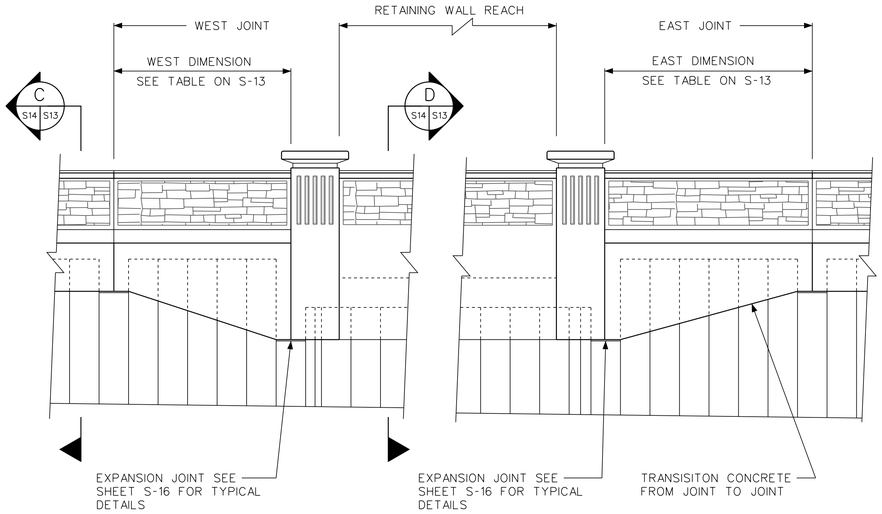

TYPICAL TRANSITION FROM FLOODWALL TO RETAINING WALL

NTS

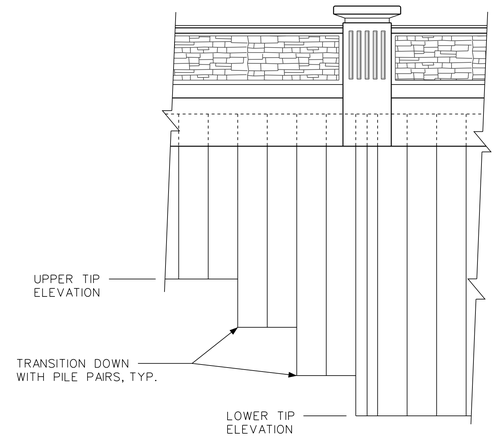

TYPICAL SSP ELVATION TRANSITION

NTS

NOTES:

1. ALL FLOODWALL CLEAR COVER 3" UNLESS OTHERWISE NOTED.

2. SEE SHEET S-12 FOR NORTH FLOODWALL DETAILS. SEE SHEET S-13 FOR SOUTH FLOODWALL AND RETAINING WALL DETAILS.

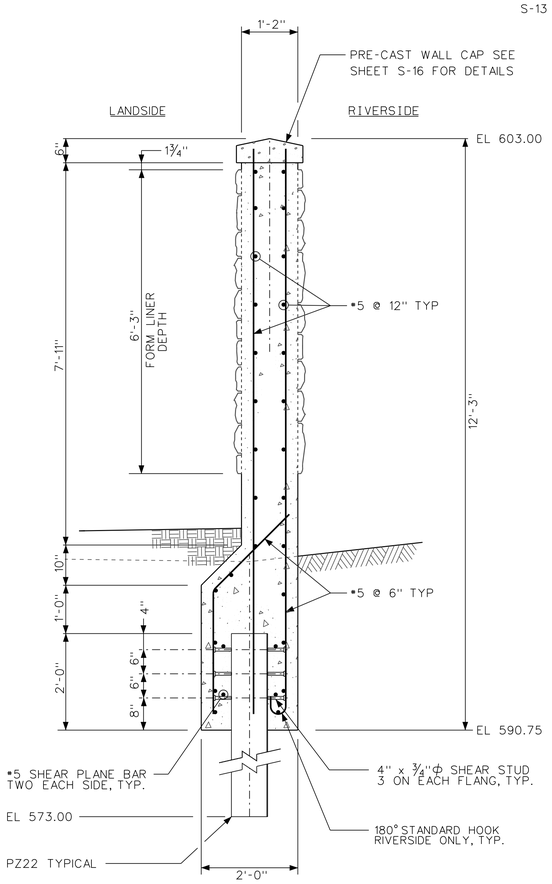

SOUTH RAMP FLOODWALL SECTION (A / C5 S14)

SCALE A

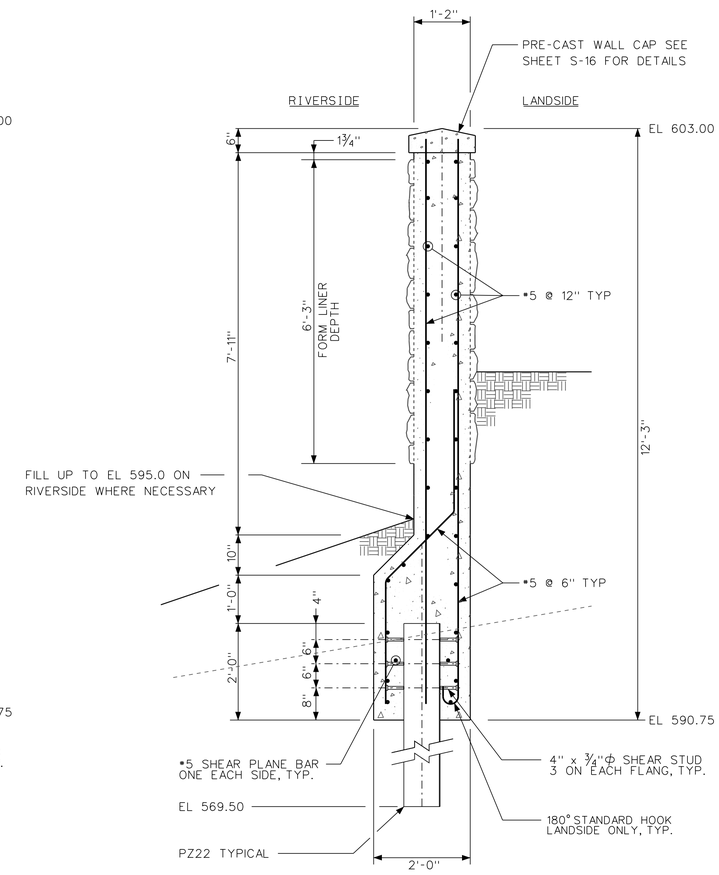

SOUTH RAMP RETAINING WALL SECTION (B / C5 S14)

SCALE A

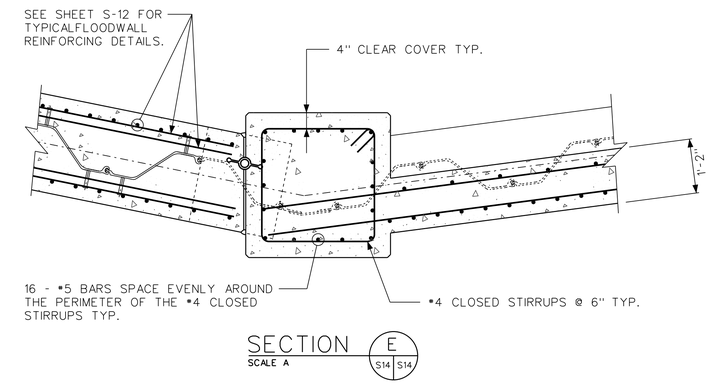

SECTION (E / S14 S14)

SCALE A

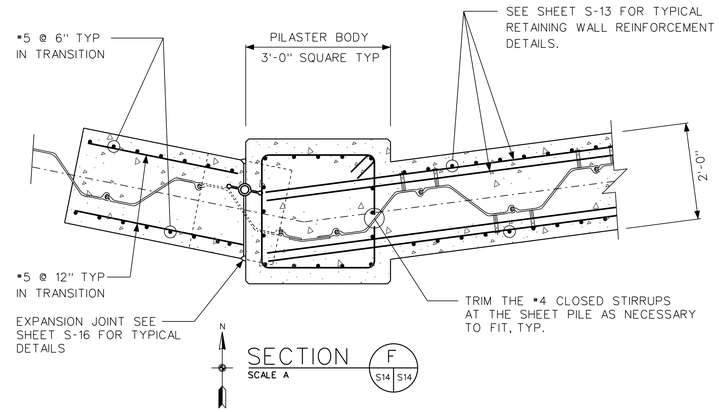

SECTION (F / S14 S14)

SCALE A

NOTE: ALL TYPICAL PILASTER DETAILS APPLY TO THE TRANSITION PILASTER EXCEPT AS NOTED ON THIS SHEET.

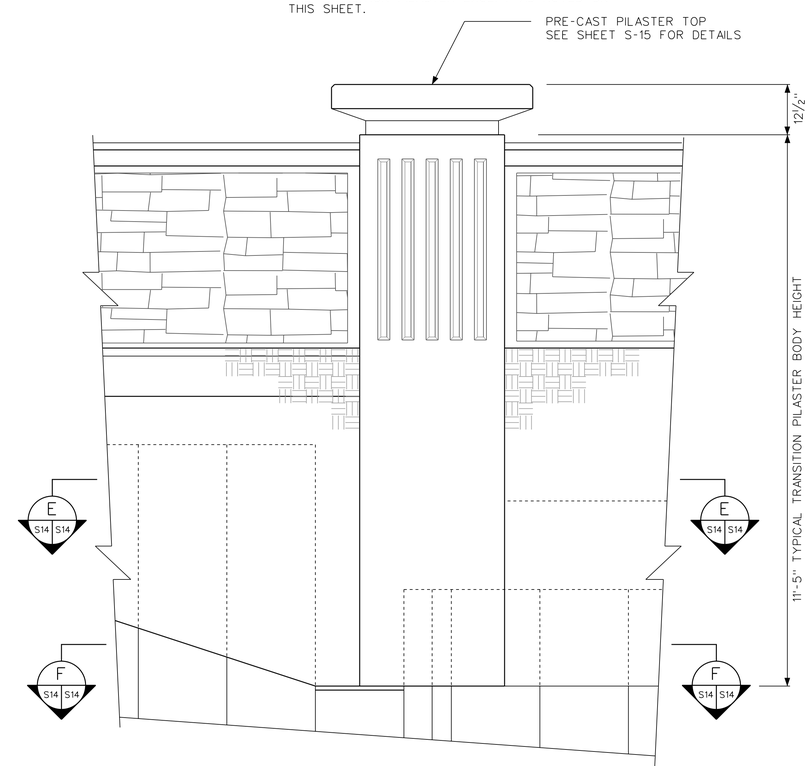

TYPICAL TRANSITION PILASTER ELEVATION

SCALE A

12 0 1 2 3

SCALE A

US Army Corps of Engineers Chicago District

SYMBOL	AMENDMENT DESCRIPTION	DATE APPROVED	SYMBOL	DESCRIPTION	DATE APPROVED

DESIGNED BY: EGS | DATE: FEBRUARY 2009
DRAWN BY: EGS | SCALE: AS SHOWN
CHECKED BY: JJS | SOLICITATION NUMBER: W912P6-09-B-0002
SUBMITTED BY: STEPHEN TREHARNE, P.E. | DATE: 7/31/08

U.S. ARMY ENGINEER DISTRICT
CORPS OF ENGINEERS
CHICAGO, ILLINOIS

LITTLE CALUMET RIVER, INDIANA
LOCAL FLOOD PROTECTION
STAGE VII - FLOODWALL
FLOODWALL
ELEVATIONS AND SECTIONS

SHEET REFERENCE NUMBER:
S-14
SHEET 65 OF 79

PLOT DATE: 2/6/2009
FILENAME: C:\Documents and Settings\VMsiesegs\My Documents\D Drive\working\dms32277\LCS7_S-14FN.dgn

LCS7_S-14FN.dgn 2/6/2009 2:34:12 PM

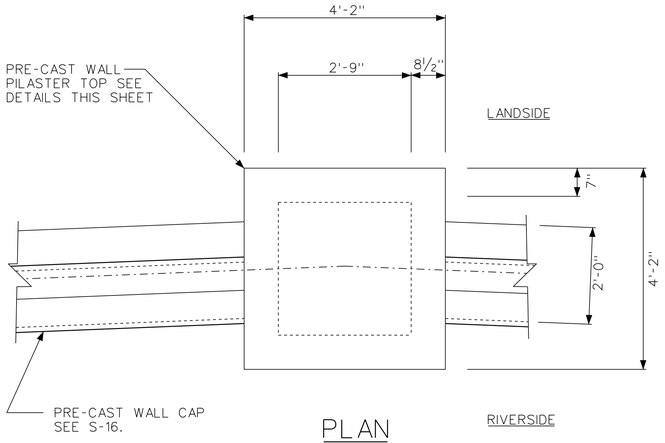

PLAN
SCALE A

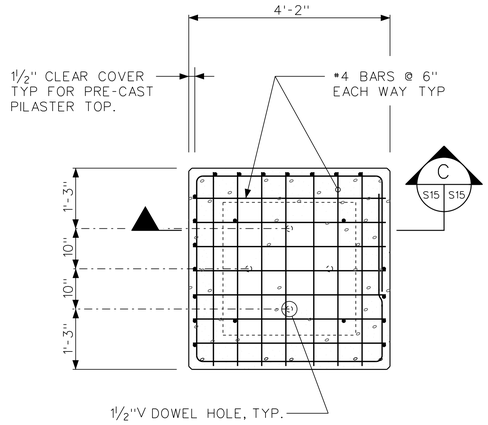

SECTION D
SCALE A

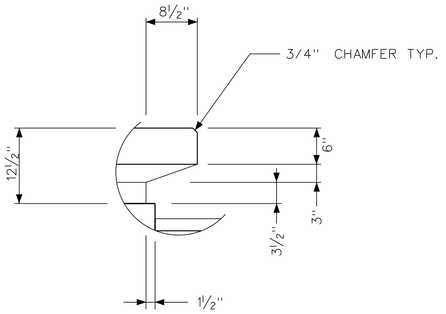

DETAIL 1
NTS

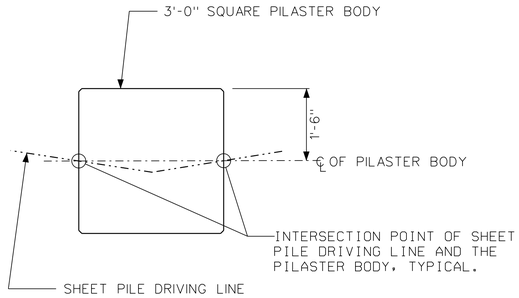

TYPICAL PILASTER ORIENTATION
NTS

NOTES:

1. THE CONTRACTOR SHALL PRE-CAST THE PILASTER TOPS AND ATTACH THEM TO THE TOPS OF THE PILASTERS AS SHOWN USING A 100% SOLID, NONSAG, EPOXY ADHESIVE.

2. THE CONTRACTOR HAS THE OPTION OF RUNNING THE WALL REINFORCEMENT CONTINUOUS THROUGH THE PILASTERS AND CASTING THE PILASTER AND THE WALLS MONOLITHICALLY OR THE CONTRACTOR CAN CAST THE PILASTERS SEPARATELY. SEE THE PILASTER REINFORCING OPTION VIEW ON THIS SHEET.

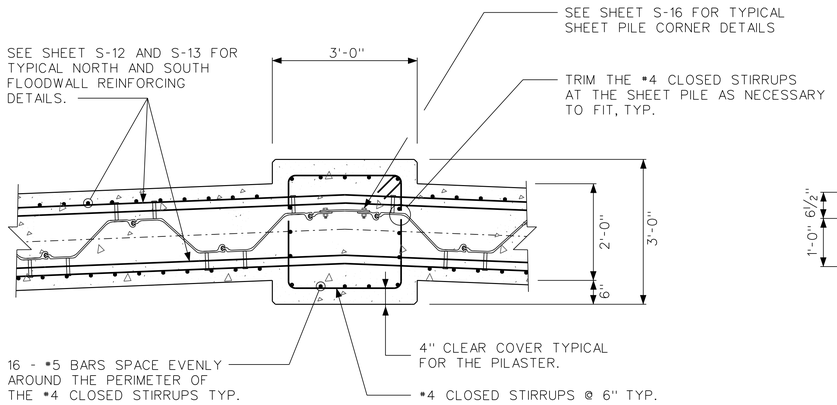

SECTION A
SCALE A

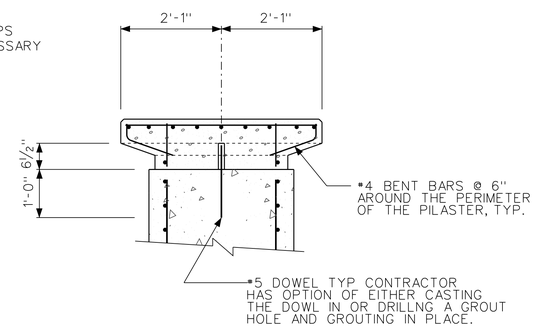

SECTION C
SCALE A

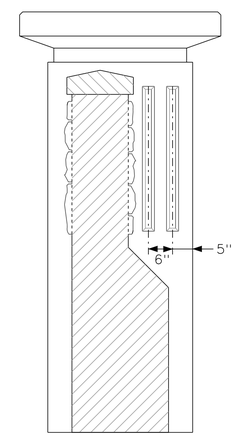

FLUTING SIDE VIEW
NTS

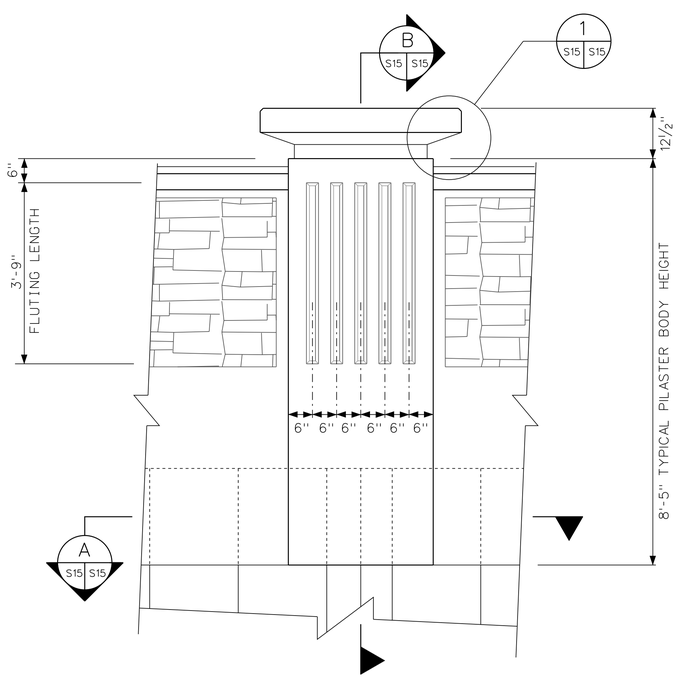

TYPICAL PILASTER ELEVATION
SCALE A

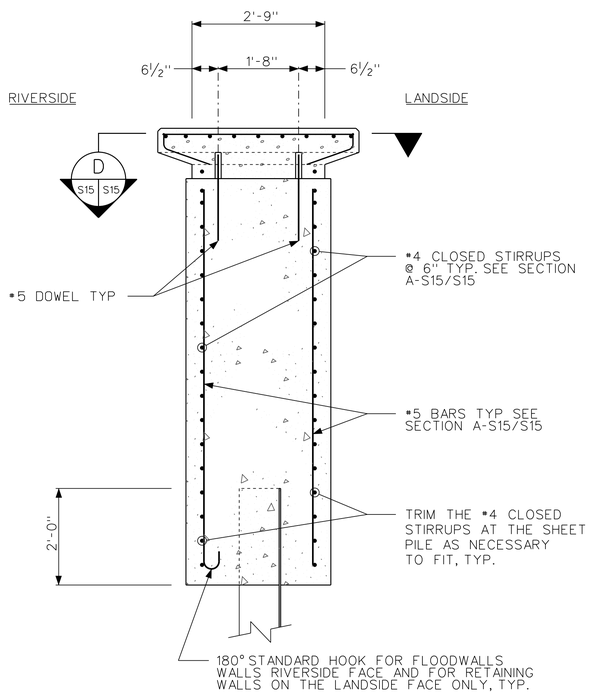

SECTION B
SCALE A

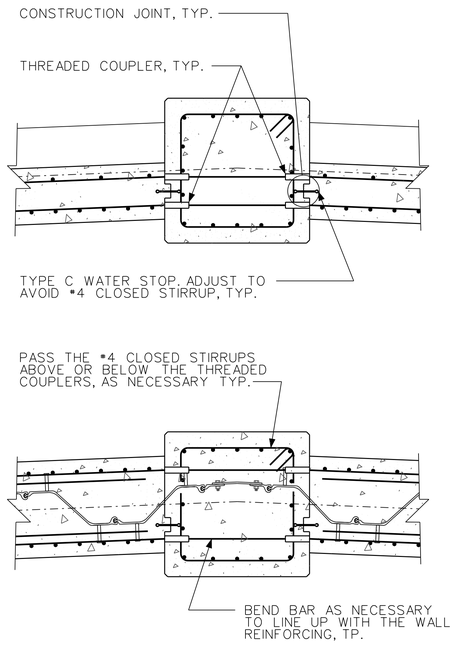

PILASTER REINFORCING OPTION
SCALE A

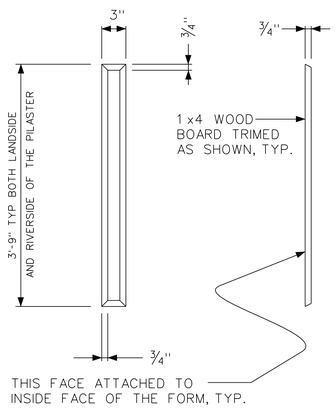

FLUTING STRIP DETAIL
NTS

12 0 1 2 3
SCALE A

US Army Corps of Engineers
Chicago District

SYMBOL	AMENDMENT DESCRIPTION	DATE APPROVED	SYMBOL	DESCRIPTION	DATE APPROVED

DESIGNED BY: EGS | DATE: FEBRUARY 2009
DRAWN BY: EGS | SCALE: AS SHOWN
CHECKED BY: JJS | SOLICITATION NUMBER: W912P6-09-B-0002
SUBMITTED BY: STEPHEN TRECHARNE, P.E. | DATE: 7/31/08

U.S. ARMY ENGINEER DISTRICT
CORPS OF ENGINEERS
CHICAGO, ILLINOIS

LITTLE CALUMET RIVER, INDIANA
LOCAL FLOOD PROTECTION
STAGE VII - FLOODWALL

TYPICAL PILASTER SECTIONS AND DETAILS

SHEET REFERENCE NUMBER:
S-15
SHEET 66 OF 79

PLOT DATE: 2/6/2009
FILENAME: C:\Documents and Settings\h16eaqs\My Documents\D Drive\working\dms32217\LCS7_S-15FN.dgn

LCS7_S-15FN.dgn 2/6/2009 2:35:27 PM

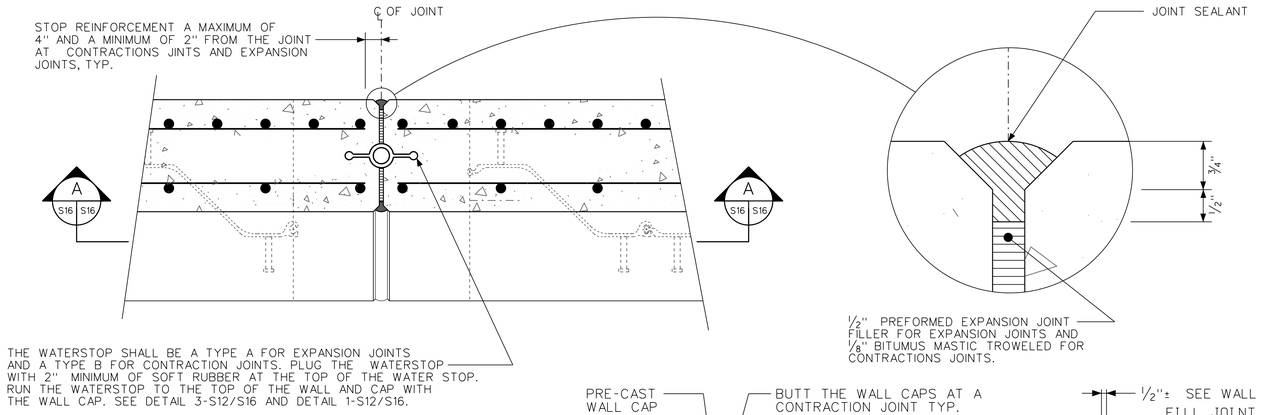

SECTION C S16 S16
NTS

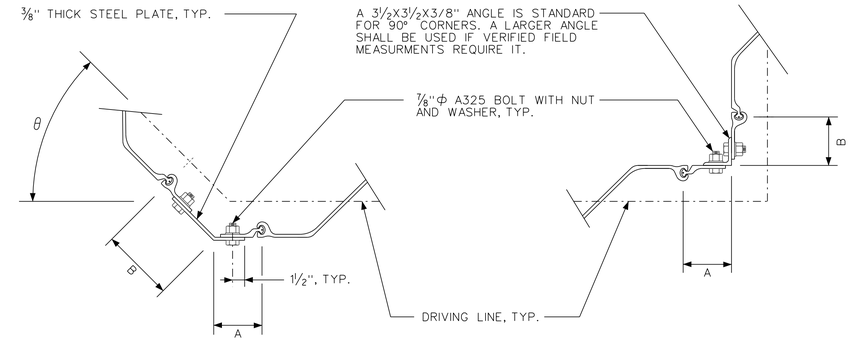

TYPICAL BENT CORNER

TYPICAL 90° CORNER

CONNECTION NOTES:

1. FIELD VERIFY ALL DIMENSIONS PRIOR TO FABRICATION.

2. THE STANDARD A AND B DIMENSION IS 6 INCHES. BOTH DIMENSIONS CAN VARY BASED ON FIELD VERIFIED DIMENSIONS WITH A MAXIMUM LENGTH OF 12 INCHES. THE A AND B DIMENSION FOR THE BENT CORNER SHALL BE DETERMINED FORM THE FIELD VERIFIED DIMENSIONS.

3. ALL FASTERNERS ARE 7/8"Φ A325 BOLTS WITH NUTS AND WASHERS SPACED AT 6 INCH ON CENTERS THROUGHOUT THE LENGTH OF THE SECTION, EXCEPT FOR 2 FEET AT EACH END WHERE THEY ARE LOCATED ON 3 INCH CENTERS.

4. SEE THE CIVIL PLAN AND PROFILE SHEETS FOR FLOOD WALL BEND COORDINATES TO CALCULATE THE BEND ANGLE θ.

TYPICAL FABRICATED SHEET PILE CORNER DETAILS
NTS

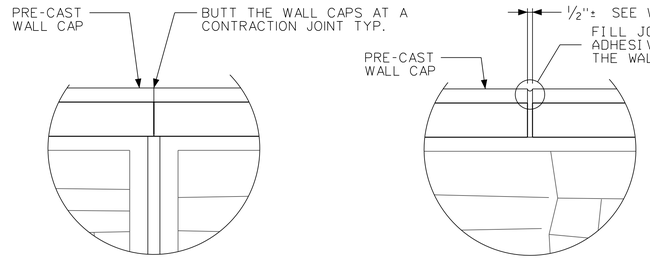

TYP CONTRACTION JOINT (CJ) END

DETAIL 1 S12 S16 / 1 S13 S16
NTS

TYP INTERIOR WALL CAP JOINT

DETAIL 2 S12 S16 / 2 S13 S16
NTS

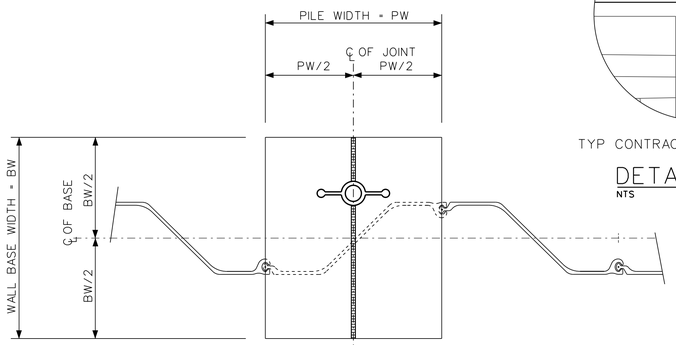

SECTION B S16 S16
NTS

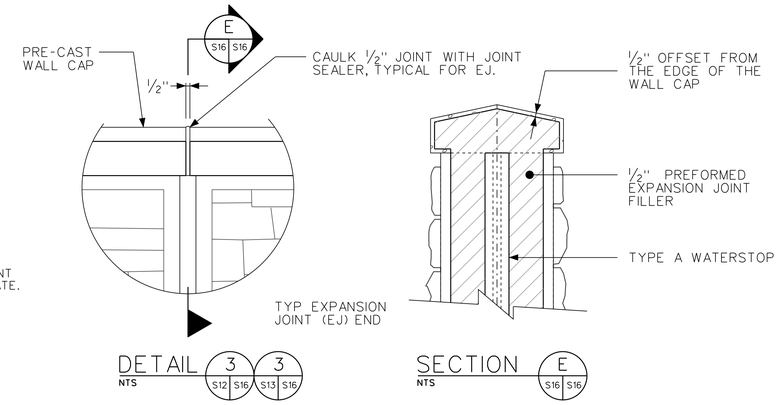

DETAIL 3 S12 S16 / 3 S13 S16
NTS

SECTION E S16 S16
NTS

WALL CAP NOTES:

1. ATTACH THE PRE-CAST WALL CAPS TO THE TOP OF THE FLOODWALL WITH A NONSAG EPOXY ADHESIVE. APPLY THE ADHESIVE PER THE MANUFACTURERS RECOMMENDATIONS.

2. SPACE THE INTERIOR PRE-CAST WALL CAP SECTIONS EVENLY BETWEEN THE TWO END SECTIONS. INTERIOR JOINTS WILL VARY FROM 5/8" TO 3/8".

3. PRE-CAST WALL CAPS SHALL BE PLACED IN STANDARD LENGTHS DIMENSIONED AS SHOWN IN TYPICAL WALL CAP DIMENSIONS. AT PILASTERS THEY SHALL BE FIELD CUT TO FIT AND SHALL BE BUTTED FLUSH UP AGAINST THE PILASTER SIDES.

4. TROWEL EXTRA EPOXY ADHESIVE AROUND THE TOPS OF THE EXPOSED WALL REINFORCING PRIOR TO PLACING THE PRE-CAST WALL CAP. SEE SHEET S-12 DETAIL 4-S12/S12.

5. WALL CAP END JOINTS AT THE ENDS OF TYPICAL WALL MONOLITHS WILL EITHER BE A CONTRACTION JOINT OR AN EXPANSION JOINT. SEE THE TABLE 1 ON SHEETS S-12 AND S-13 FOR DETAILS.

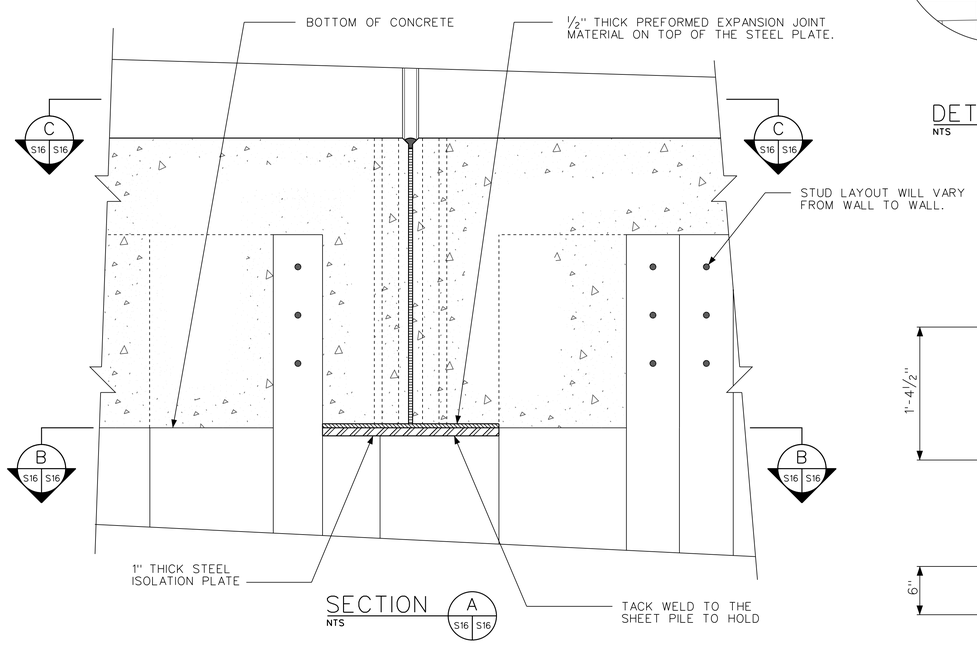

SECTION A S16 S16
NTS

TYPICAL EXPANSION/CONTRACTION JOINT DETAILS
NTS

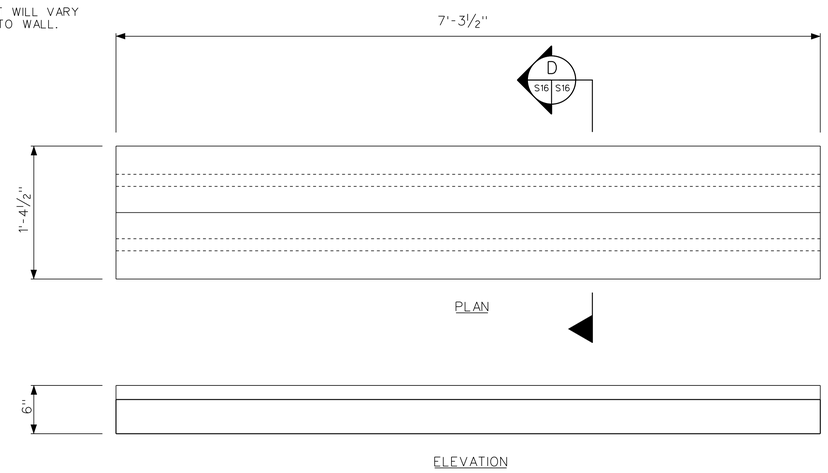

TYPICAL WALL CAP DIMENSIONS
NTS

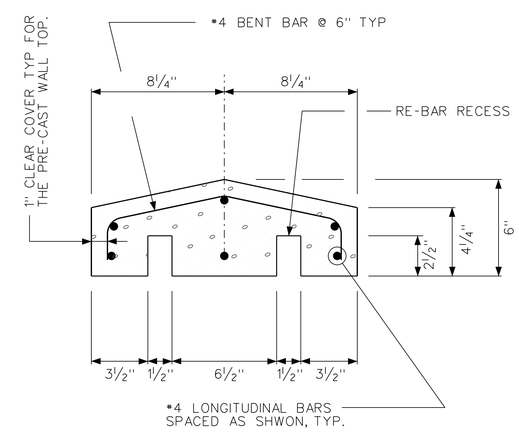

SECTION D S16 S16
NTS

US Army Corps of Engineers
Chicago District

SYMBOL	AMENDMENT DESCRIPTION	DATE APPROVED	SYMBOL	DESCRIPTION	DATE APPROVED

DESIGNED BY: EGS | DATE: FEBRUARY 2009
DRAWN BY: EGS | SCALE: AS SHOWN
CHECKED BY: JJS | SOLICITATION NUMBER: W912P6-09-B-0002
SUBMITTED BY: STEPHEN TRECHARNE, P.E. | DATE: 7/31/08

U.S. ARMY ENGINEER DISTRICT
CORPS OF ENGINEERS
CHICAGO, ILLINOIS

LITTLE CALUMET RIVER, INDIANA
LOCAL FLOOD PROTECTION
STAGE VII - FLOODWALL
TYPICAL FLOODWALL DETAILS

SHEET REFERENCE NUMBER:
S-16
SHEET 67 OF 79

PLOT DATE: 2/6/2009
FILENAME: C:\Documents and Settings\hl6teeqs\My Documents\D Drive\working\dms32217\LCS7_S-16FN.dgn

LCS7_S-16FN.dgn 2/6/2009 2:38:59 PM

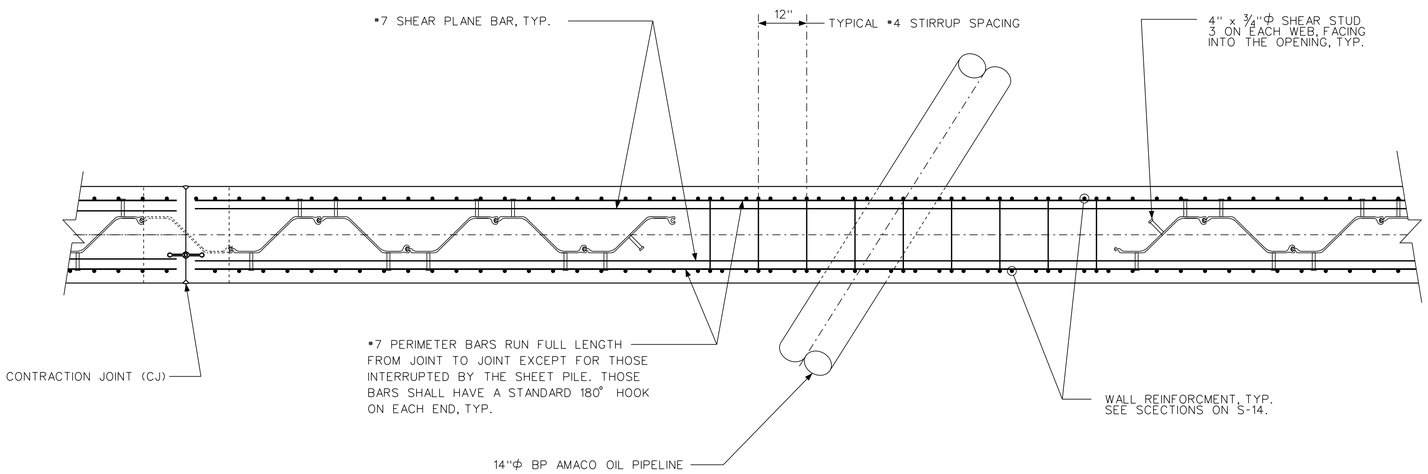

SECTION A (S17 | S17)
SCALE A

NOTES:

1. FIELD VERITY THE LOCATIONS OF ALL PIPELINES PRIOR TO ANY CONSTRUCTION ACTIVITIES IN THE AREA OF THE PIPE PASSINGS.

2. THE CONTRACTOR SHALL EXPOSE EACH PIPELINE PRIOR TO CONSTRUCTION ACTIVITIES IN THE AREA OF THE PIPELINES.

3. THE CONTRACTOR SHALL SUPPORT ALL CONCRETE FROM WORK SPANNING OVER PIPELINES FOR A MINIMUM OF 14 DAYS BEFORE CONCRETE FORMS AND SUPPORTS CAN BE REMOVED. FORM SUPPORTS SHALL NOT IMPACT ON THE PIPELINES.

4. THE PIPE PASSING EXCAVATION SHALL BE DUG DOWN TO ONE FOOT BELOW THE CLAY LAYER TO APPROXIMATELY ELEVATION 585.0. IF GROUND WATER IS ENCOUNTERED THE CONTRACTOR SHALL USE TRIMIE CONCRETE TO BACKFILL THE EXCAVATION TO ABOVE ANY STANDING WATER. THE REST OF THE EXCAVATION SHALL BE BACKFILLED WITH IMPERVIOUS FILL. IMPERVIOUS FILL SHALL BE USED AROUND THE PIPES. THE EXCAVATION SHALL KEY IN AROUND THE ENDS OF THE SHEET PILE ON EITHER SIDE OF THE OPENING BY A MINIMUM OF 3'-0".

5. THE CONTRACTOR HAS THE OPTION OF USING A BENTONITE SLURRY TO FACILITATE THE PIPE PASSING EXCAVATION.

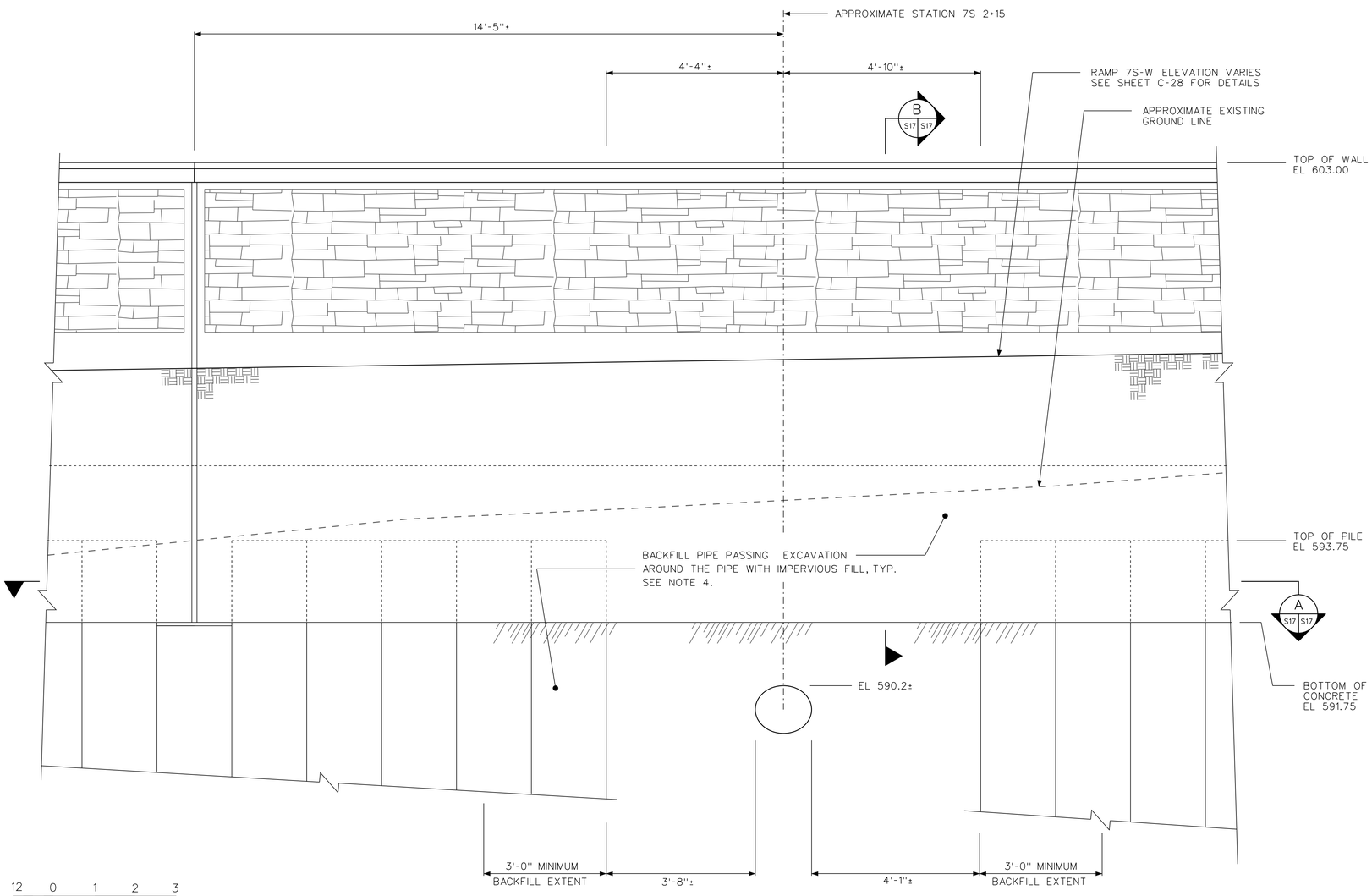

ELEVATION
SCALE A

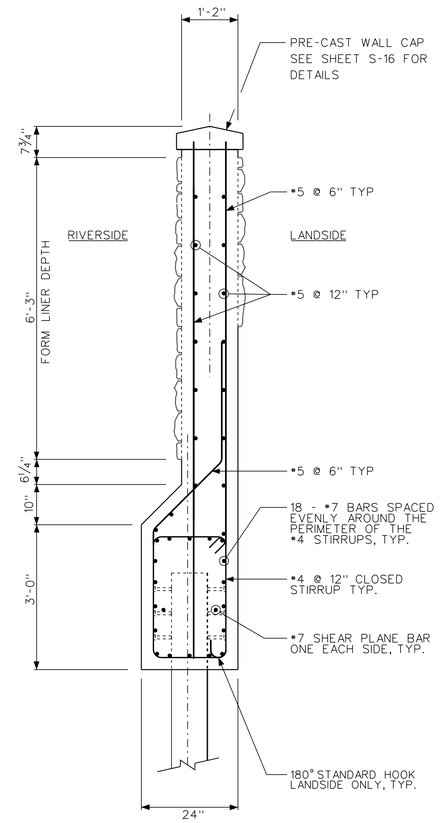

SECTION B (S17 | S17)
SCALE A

US Army Corps of Engineers
Chicago District

SYMBOL	AMENDMENT DESCRIPTION	DATE APPROVED	SYMBOL	DESCRIPTION	DATE APPROVED

DESIGNED BY: EGS | DATE: FEBRUARY 2009
DRAWN BY: EGS | SCALE: AS SHOWN
CHECKED BY: JJS | SOLICITATION NUMBER: W912P6-09-B-0002
SUBMITTED BY: STEPHEN TREHARNE, P.E. | DATE: 7/31/08

U.S. ARMY ENGINEER DISTRICT
CORPS OF ENGINEERS
CHICAGO, ILLINOIS

LITTLE CALUMET RIVER, INDIANA
LOCAL FLOOD PROTECTION
STAGE VII - FLOODWALL

7S 2+15 PIPE PASSING
ELEVATION, SECTIONS,
AND DETAILS

SHEET REFERENCE NUMBER:
S-17
SHEET 68 OF 79

PLOT DATE: 2/6/2009
FILENAME: C:\Documents and Settings\h16eegs\My Documents\D Drive\working\dms32217\LCS7_S-17FN.dgn

LCS7_S-17FN.dgn 2/6/2009 2:41:19 PM

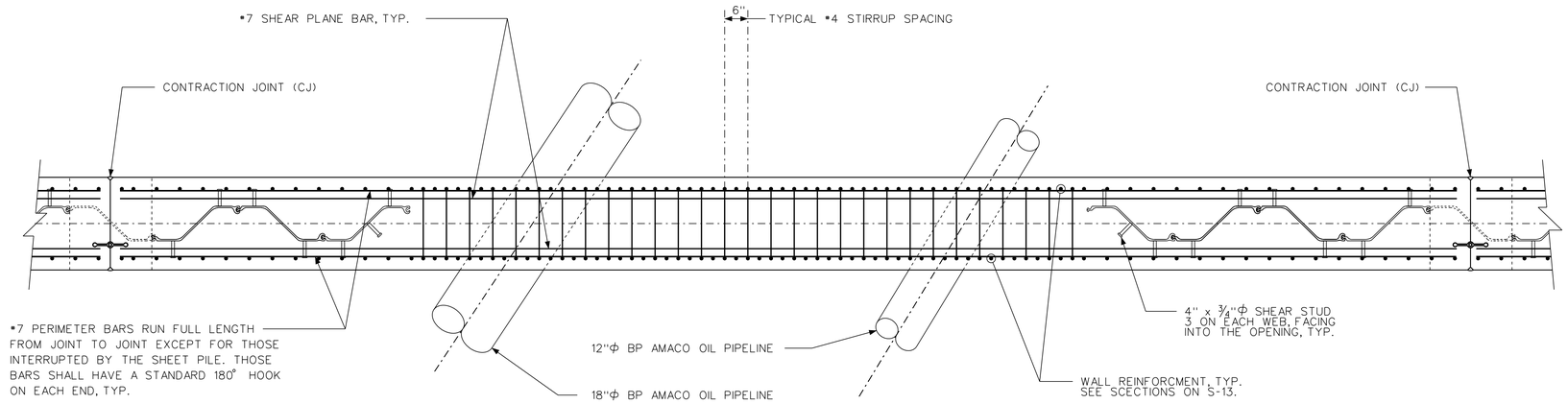

SECTION A
SCALE A

NOTES:

1. FIELD VERITY THE LOCATIONS OF ALL PIPELINES PRIOR TO ANY CONSTRUCTION ACTIVITIES IN THE AREA OF THE PIPE PASSINGS.

2. THE CONTRACTOR SHALL EXPOSE EACH PIPELINE PRIOR TO CONSTRUCTION ACTIVITIES IN THE AREA OF THE PIPELINES.

3. THE CONTRACTOR SHALL SUPPORT ALL CONCRETE FROM WORK SPANNING OVER PIPELINES FOR A MINIMUM OF 14 DAYS BEFORE CONCRETE FORMS AND SUPPORTS CAN BE REMOVED. FORM SUPPORTS SHALL NOT IMPACT ON THE PIPELINES.

4. THE PIPE PASSING EXCAVATION SHALL BE DUG DOWN TO ONE FOOT BELOW THE CLAY LAYER TO APPROXIMATELY ELEVATION 582.0. IF GROUND WATER IS ENCOUNTERED THE CONTRACTOR SHALL USE TRIMIE CONCRETE TO BACKFILL THE EXCAVATION TO ABOVE ANY STANDING WATER. THE REST OF THE EXCAVATION SHALL BE BACKFILLED WITH IMPERVIOUS FILL. IMPERVIOUS FILL SHALL BE USED AROUND THE PIPES. THE EXCAVATION SHALL KEY IN AROUND THE ENDS OF THE SHEET PILE ON EITHER SIDE OF THE OPENING BY A MINIMUM OF 3'-0".

5. THE CONTRACTOR HAS THE OPTION OF USING A BENTONITE SLURRY TO FACILITATE THE PIPE PASSING EXCAVATION.

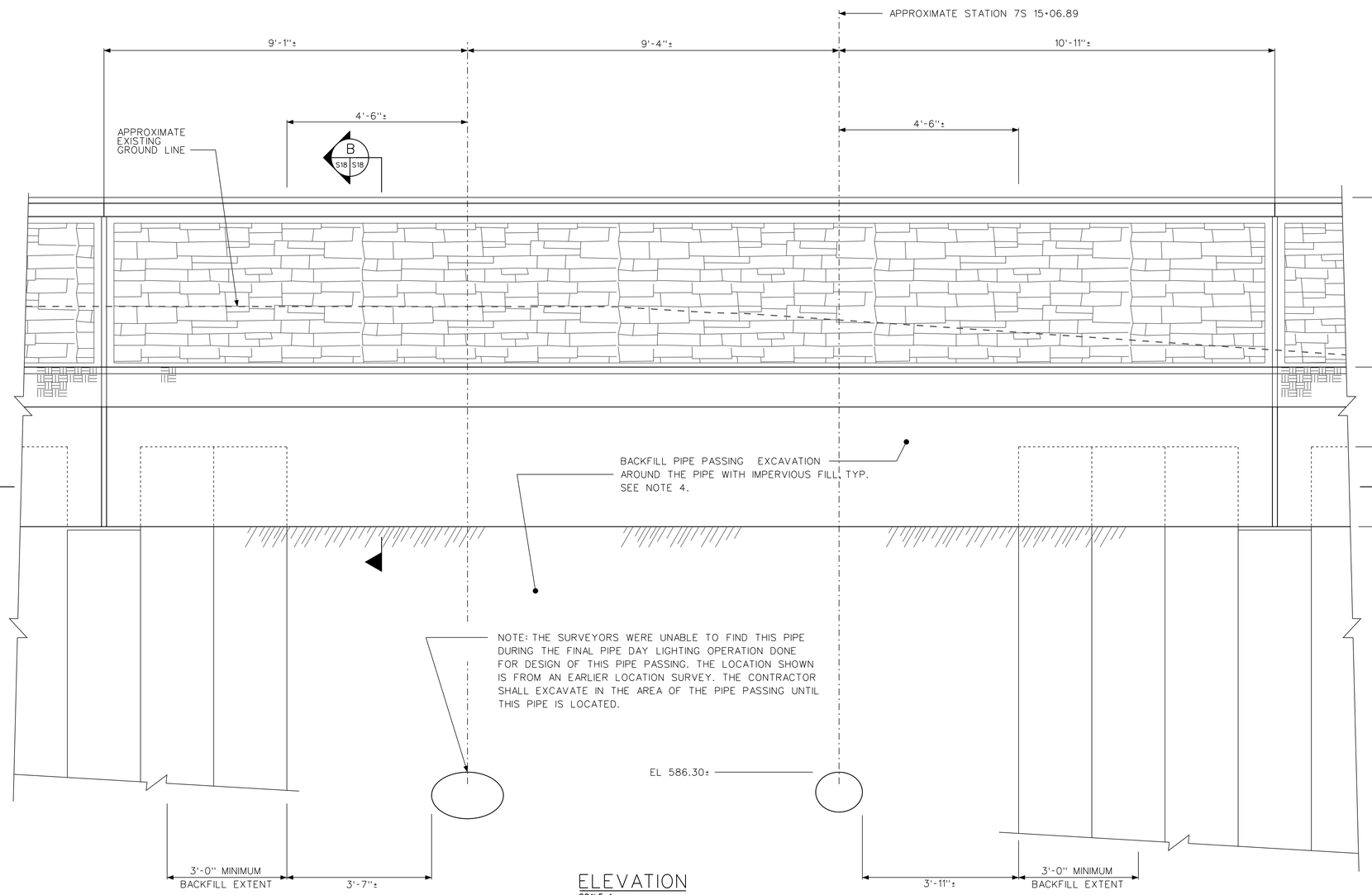

ELEVATION
SCALE A

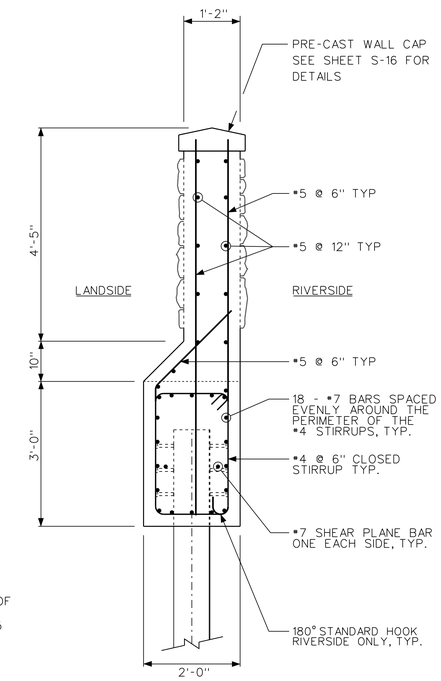

12 0 1 2 3
SCALE A

SECTION B
SCALE A

US Army Corps of Engineers
Chicago District

SYMBOL	AMENDMENT DESCRIPTION	DATE APPROVED	SYMBOL	DESCRIPTION	DATE APPROVED

DESIGNED BY: EGS
DATE: FEBRUARY 2009
DRAWN BY: EGS
SCALE: AS SHOWN
CHECKED BY: JJS
SOLICITATION NUMBER: W912P6-09-B-0002
SUBMITTED BY: STEPHEN TRECHARNE, P.E.
DATE: 7/31/08

U.S. ARMY ENGINEER DISTRICT
CORPS OF ENGINEERS
CHICAGO, ILLINOIS

LITTLE CALUMET RIVER, INDIANA
LOCAL FLOOD PROTECTION
STAGE VII - FLOODWALL
7S 15+00 PIPE PASSING
ELEVATION, SECTIONS, AND DETAILS

SHEET REFERENCE NUMBER:
S-18
SHEET 69 OF 79

PLOT DATE: 2/6/2009
FILENAME: C:\Documents and Settings\h16eseqs\My Documents\0 Drive\working\dms32217\LCS7_S-18FN.dgn

LCS7_S-18FN.dgn 2/6/2009 2:43:07 PM

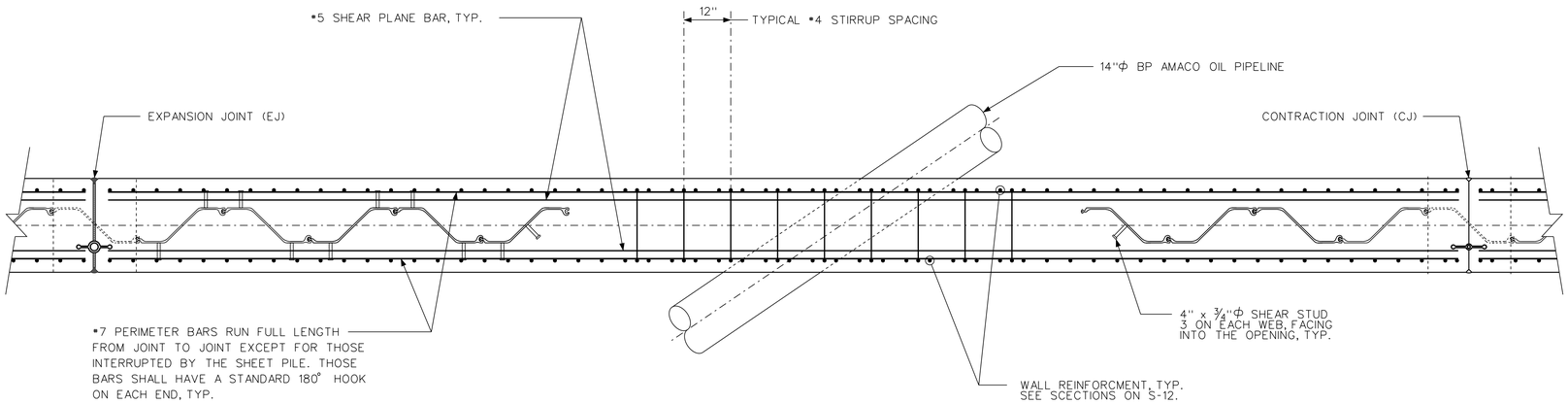

SECTION A
SCALE A
S19 S19

NOTES:

1. FIELD VERITY THE LOCATIONS OF ALL PIPELINES PRIOR TO ANY CONSTRUCTION ACTIVITIES IN THE AREA OF THE PIPE PASSINGS.

2. THE CONTRACTOR SHALL EXPOSE EACH PIPELINE PRIOR TO CONSTRUCTION ACTIVITIES IN THE AREA OF THE PIPELINES.

3. THE CONTRACTOR SHALL SUPPORT ALL CONCRETE FROM WORK SPANNING OVER PIPELINES FOR A MINIMUM OF 14 DAYS BEFORE CONCRETE FORMS AND SUPPORTS CAN BE REMOVED. FORM SUPPORTS SHALL NOT IMPACT ON THE PIPELINES.

4. THE PIPE PASSING EXCAVATION SHALL BE DUG DOWN TO ONE FOOT BELOW THE CLAY LAYER TO APPROXIMATELY ELEVATION 579.0. IF GROUND WATER IS ENCOUNTERED THE CONTRACTOR SHALL USE TRIMIE CONCRETE TO BACKFILL THE EXCAVATION TO ABOVE ANY STANDING WATER. THE REST OF THE EXCAVATION SHALL BE BACKFILLED WITH IMPERVIOUS FILL. IMPERVIOUS FILL SHALL BE USED AROUND THE PIPE. THE EXCAVATION SHALL KEY IN AROUND THE ENDS OF THE SHEET PILE ON EITHER SIDE OF THE OPENING BY A MINIMUM OF 3'-0".

5. THE CONTRACTOR HAS THE OPTION OF USING A BENTONITE SLURRY TO FACILITATE THE PIPE PASSING EXCAVATION.

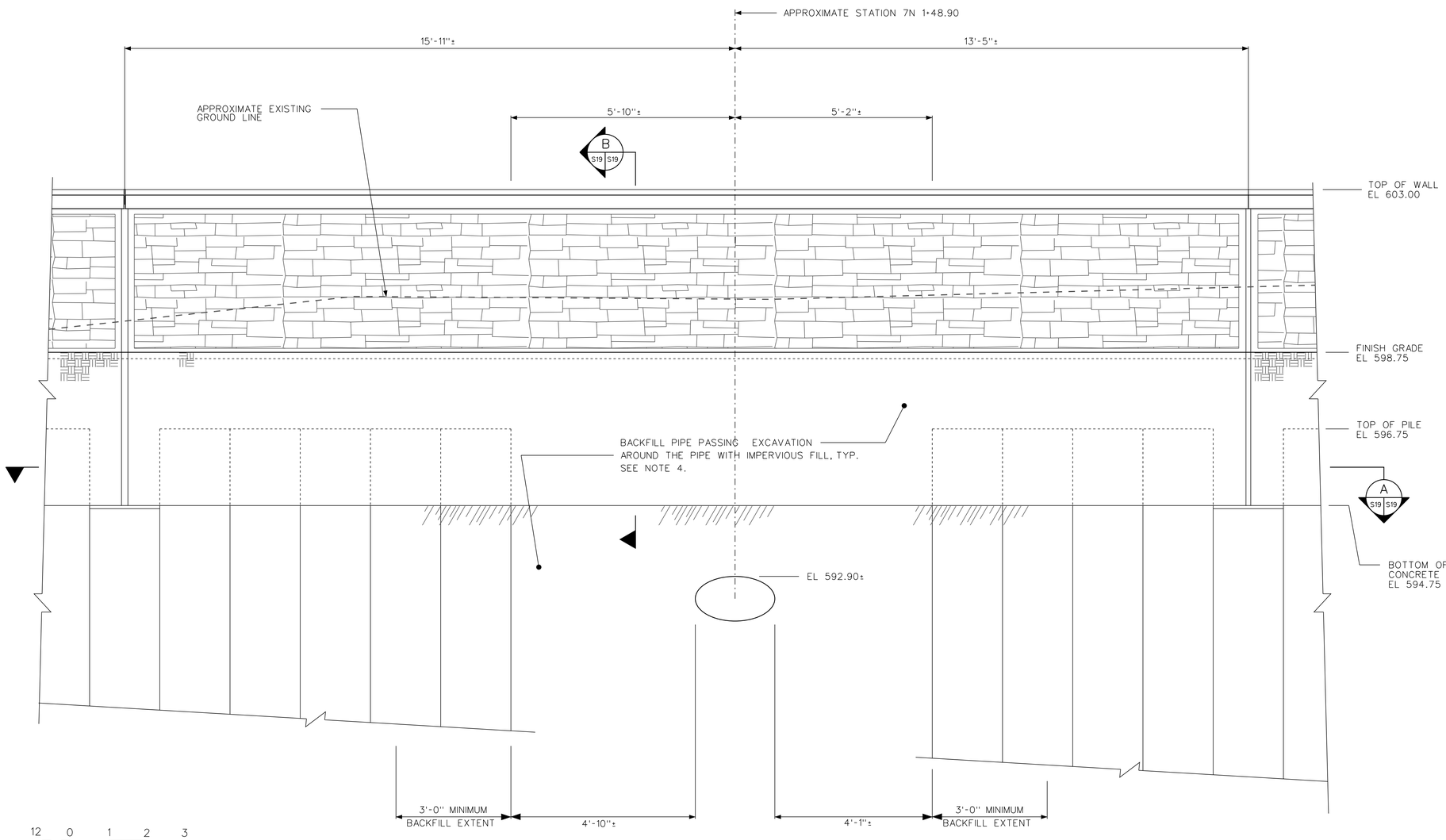

ELEVATION
SCALE A

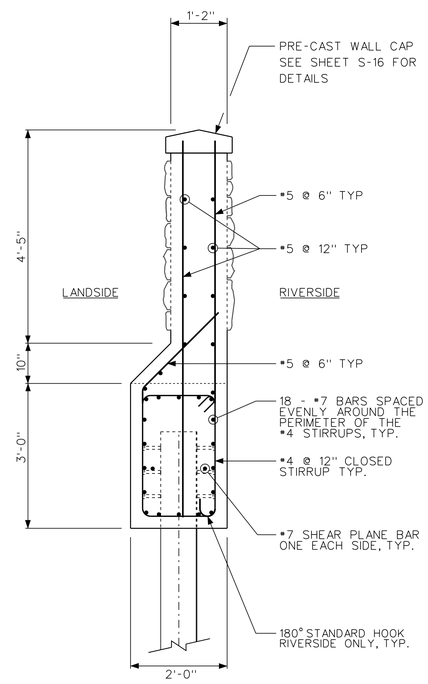

SECTION B
SCALE A
S19 S19

US Army Corps of Engineers
Chicago District

SYMBOL	AMENDMENT DESCRIPTION	DATE	APPROVED	SYMBOL	DESCRIPTION	DATE	APPROVED

U.S. ARMY ENGINEER DISTRICT
CORPS OF ENGINEERS
CHICAGO, ILLINOIS

DESIGNED BY: EGS
DRAWN BY: EGS
CHECKED BY: JJS
SUBMITTED BY:
DATE: FEBRUARY 2009
SCALE: AS SHOWN
SOLICITATION NUMBER: W912P6-09-B-0002
STEPHEN TREHARNE, P.E. 7/31/08
DATE:

LITTLE CALUMET RIVER, INDIANA
LOCAL FLOOD PROTECTION
STAGE VII - FLOODWALL
7N 1+50 PIPE PASSING
ELEVATION, SECTIONS, AND DETAILS

SHEET REFERENCE NUMBER:
S-19
SHEET 70 OF 79

PLOT DATE: 2/6/2009
FILENAME: C:\Documents and Settings\h6tesegs\My Documents\D Drive\working\dms32217\LCS7_S-19FN.dgn

LCS7_S-19FN.dgn 2/6/2009 2:44:19 PM

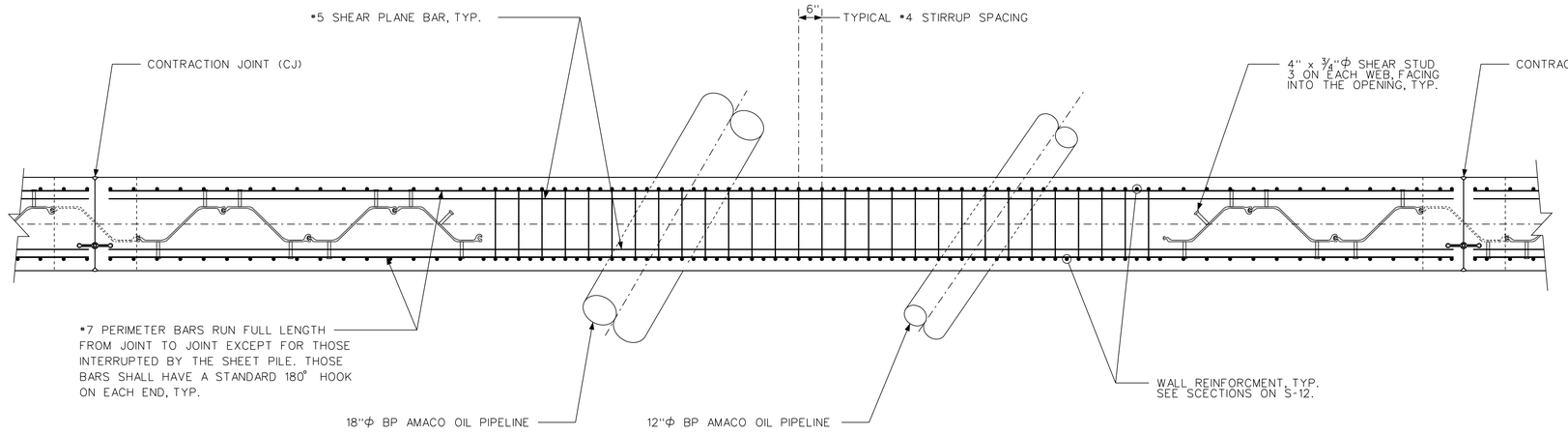

SECTION A
SCALE A
S20 S20

NOTES:

1. FIELD VERITY THE LOCATIONS OF ALL PIPELINES PRIOR TO ANY CONSTRUCTION ACTIVITIES IN THE AREA OF THE PIPE PASSINGS.

2. THE CONTRACTOR SHALL EXPOSE EACH PIPELINE PRIOR TO CONSTRUCTION ACTIVITIES IN THE AREA OF THE PIPELINES.

3. THE CONTRACTOR SHALL SUPPORT ALL CONCRETE FROM WORK SPANNING OVER PIPELINES FOR A MINIMUM OF 14 DAYS BEFORE CONCRETE FORMS AND SUPPORTS CAN BE REMOVED. FORM SUPPORTS SHALL NOT IMPACT ON THE PIPELINES.

4. THE PIPE PASSING EXCAVATION SHALL BE DUG DOWN TO ONE FOOT BELOW THE CLAY LAYER TO APPROXIMATELY ELEVATION 582.5. IF GROUND WATER IS ENCOUNTERED THE CONTRACTOR SHALL USE TRIMIE CONCRETE TO BACKFILL THE EXCAVATION TO ABOVE ANY STANDING WATER. THE REST OF THE EXCAVATION SHALL BE BACKFILLED WITH IMPERVIOUS FILL. IMPERVIOUS FILL SHALL BE USED AROUND THE PIPES. THE EXCAVATION SHALL KEY IN AROUND THE ENDS OF THE SHEET PILE ON EITHER SIDE OF THE OPENING BY A MINIMUM OF 3'-0".

5. THE CONTRACTOR HAS THE OPTION OF USING A BENTONITE SLURRY TO FACILITATE THE PIPE PASSING EXCAVATION.

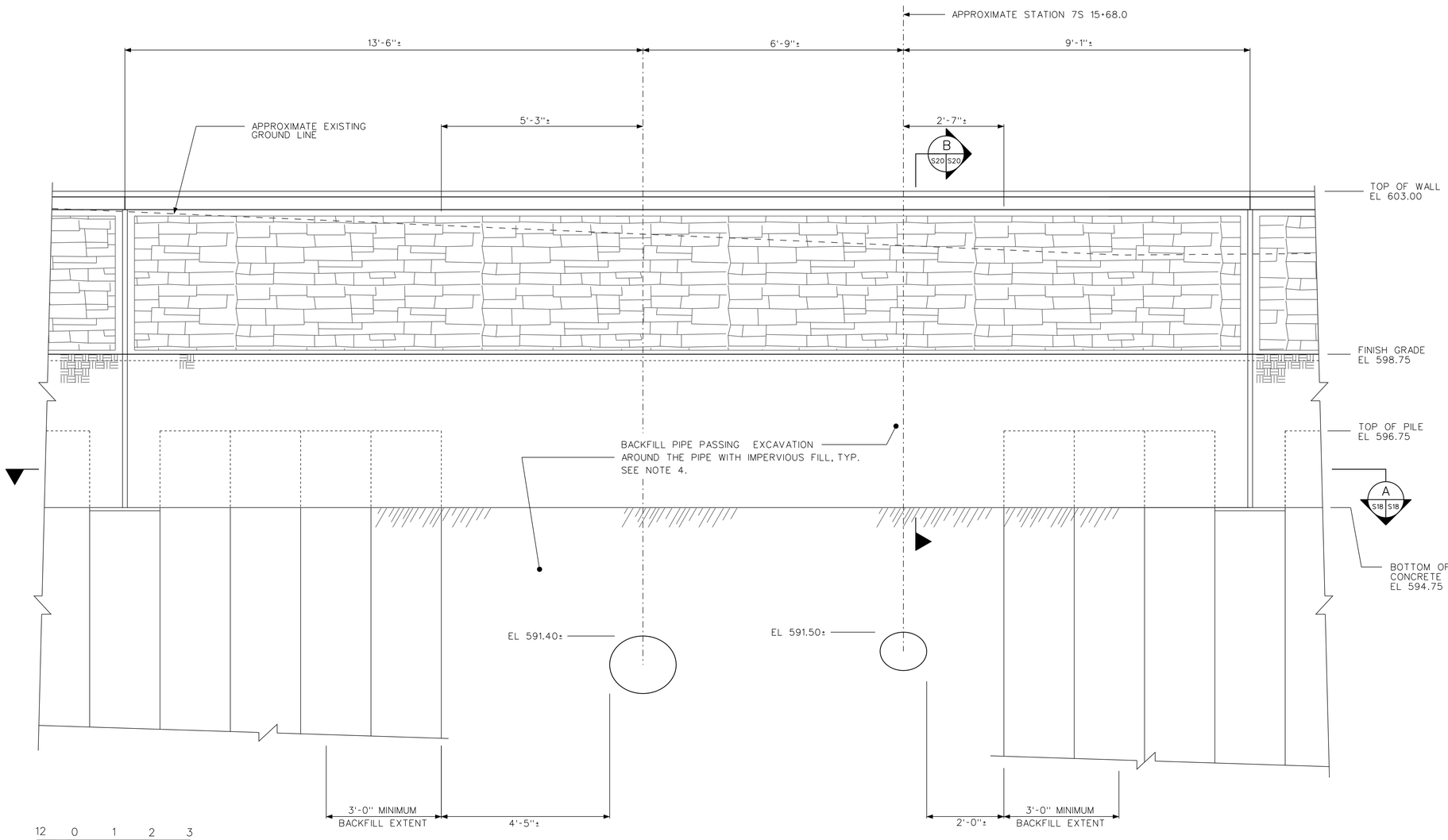

ELEVATION
SCALE A

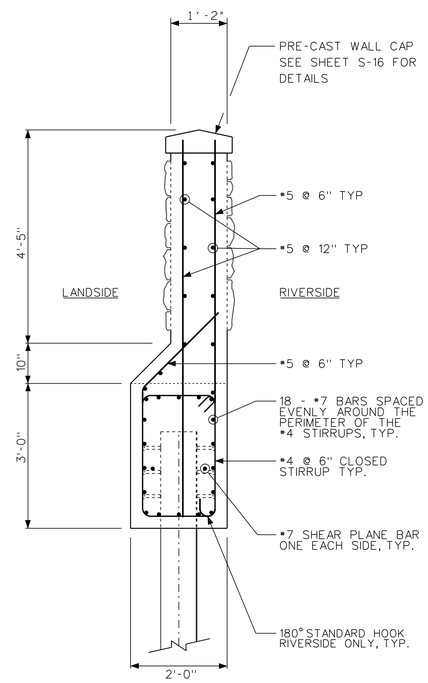

SECTION B
SCALE A
S20 S20

US Army Corps of Engineers
Chicago District

SYMBOL	AMENDMENT DESCRIPTION	DATE	APPROVED	SYMBOL	DESCRIPTION	DATE	APPROVED

DESIGNED BY: EGS
DATE: FEBRUARY 2009
DRAWN BY: EGS
SCALE: AS SHOWN
CHECKED BY: JJS
SOLICITATION NUMBER: W912P6-09-B-0002
STEPHEN TREHARNE, P.E. 7/31/08
SUBMITTED BY:
DATE:

U.S. ARMY ENGINEER DISTRICT
CORPS OF ENGINEERS
CHICAGO, ILLINOIS

LITTLE CALUMET RIVER, INDIANA
LOCAL FLOOD PROTECTION
STAGE VII - FLOODWALL
7N 15+68 PIPE PASSING
ELEVATION, SECTIONS, AND DETAILS

SHEET REFERENCE NUMBER:
S-20
SHEET 71 OF 79

PLOT DATE: 2/6/2009
FILENAME: C:\Documents and Settings\h6tesegs\My Documents\D Drive\working\dms32217\LCS7_S-20FN.dgn

LCS7_S-20FN.dgn 2/6/2009 2:45:25 PM

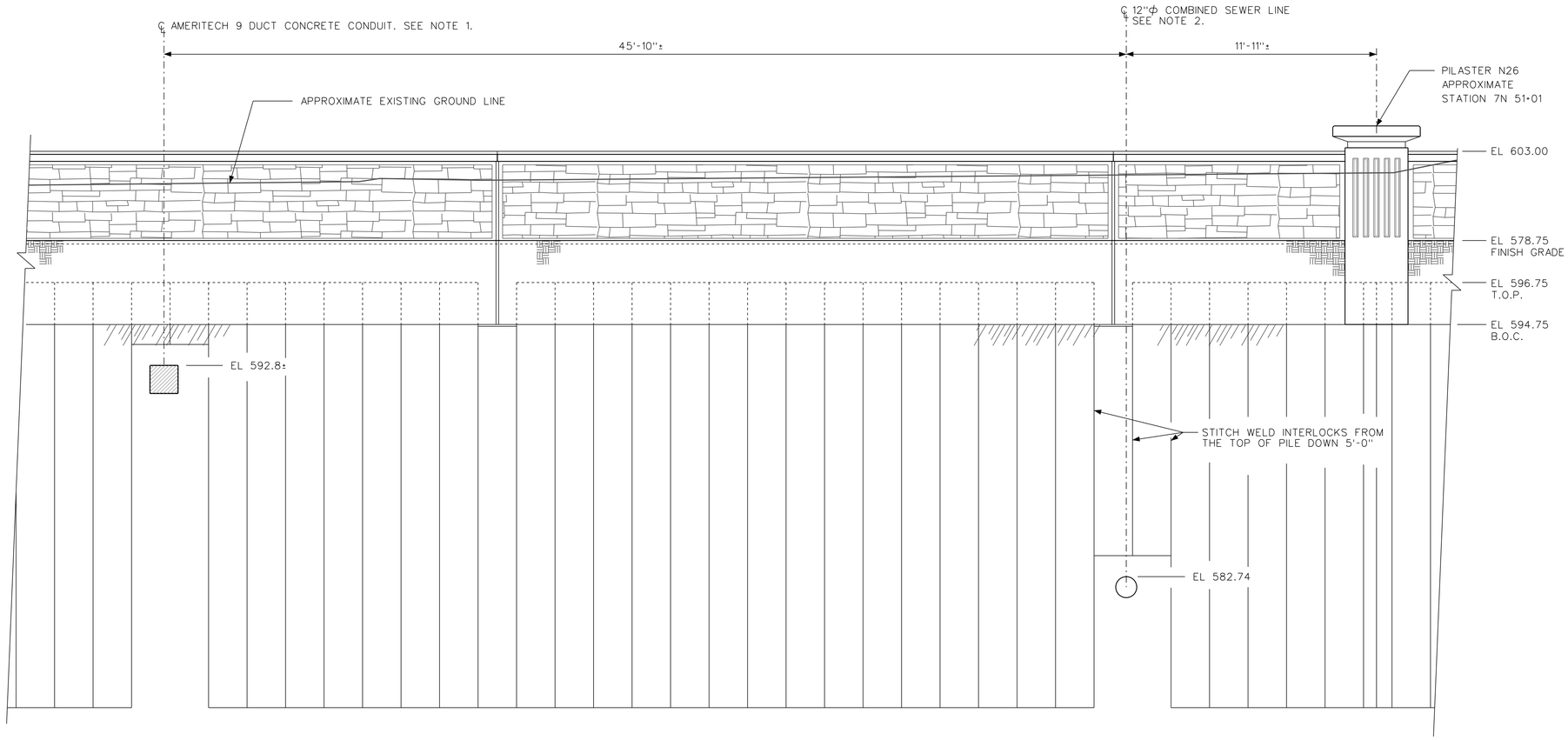

NORTH ELEVATION NEAR PILASTER N26

SCALE A

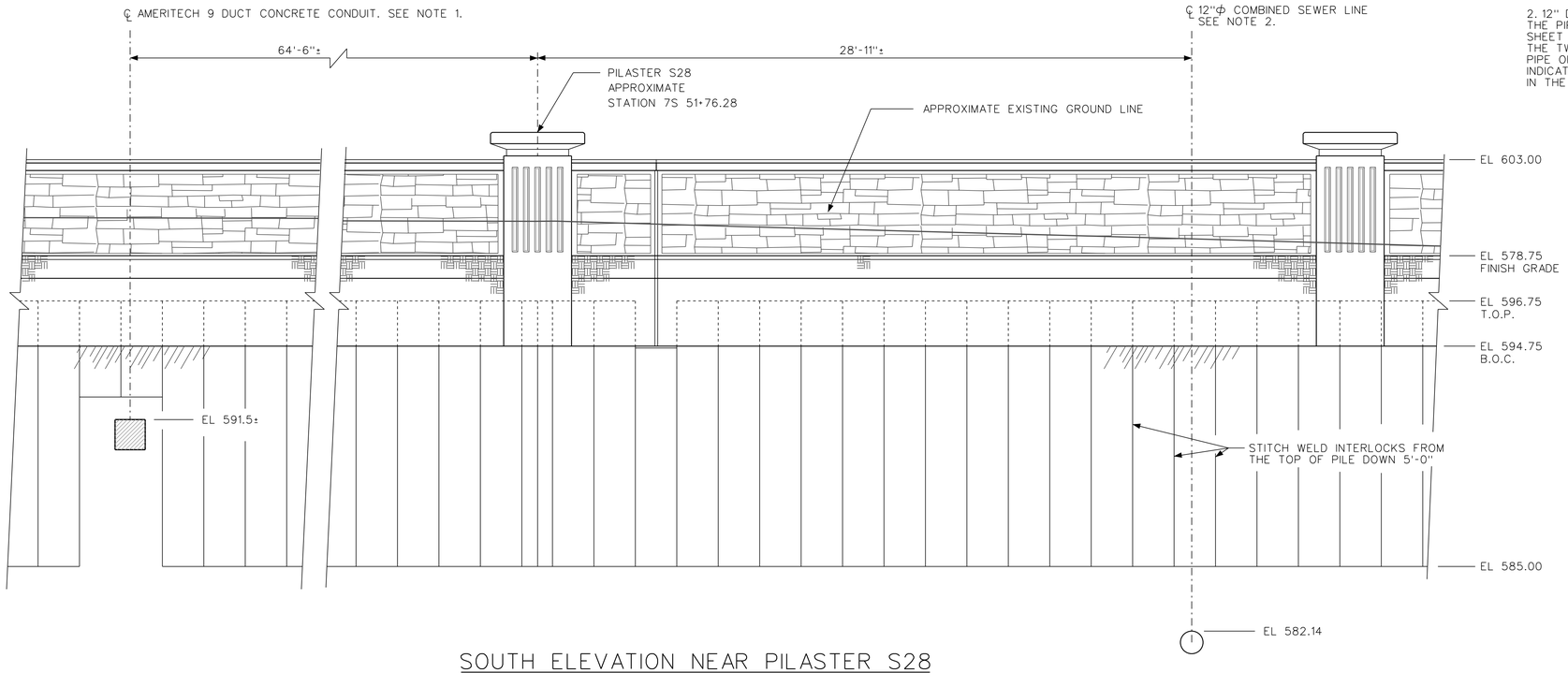

SOUTH ELEVATION NEAR PILASTER S28

SCALE A

NOTES:

1. AMERITECH 9 DUCT CONCRETE CONDUIT. EXCAVATE DOWN TO THE CONDUIT TO FIELD VERIFY THE LOCATION PRIOR TO DRIVING SHEET PILE IN THIS LOCATION. DRIVE THE PILE ON EITHER SIDE, SET THE TWO PILE SECTIONS OVER THE PIPE DOWN TO 1'-0" ABOVE THE CONDUIT AND STITCH WELD IN PLACE. BACKFILL THE EXCAVATION WITH IMPERVIOUS FILL.

2. 12" DIAMETER PIPE COMBINED SEWER LINE. EXCAVATE DOWN TO THE PIPE TO FIELD VERIFY THE LOCATION PRIOR TO DRIVING SHEET PILE IN THIS LOCATION. DRIVE THE PILE ON EITHER SIDE, SET THE TWO PILE SECTIONS OVER THE PIPE DOWN TO 1'-0" ABOVE THE PIPE OR FOR THE SOUTH SIDE SET THE TWO PILE SECTION TO THE INDICATED TIP ELEVATION AND STITCH WELD IN PLACE AS INDICATED IN THE ELEVATION. BACKFILL THE EXCAVATION WITH IMPERVIOUS FILL.

12 0 1 2 3

SCALE A

US Army Corps of Engineers Chicago District

SYMBOL	AMENDMENT DESCRIPTION	DATE	APPROVED	SYMBOL	DESCRIPTION	DATE	APPROVED

DESIGNED BY: EGS | DATE: FEBRUARY 2009
DRAWN BY: EGS | SCALE: AS SHOWN
CHECKED BY: JJS | SOLICITATION NUMBER: W912P6-09-B-0002
STEPHEN TREHARNE, P.E. 7/31/08
SUBMITTED BY: | DATE:

U.S. ARMY ENGINEER DISTRICT
CORPS OF ENGINEERS
CHICAGO, ILLINOIS

LITTLE CALUMET RIVER, INDIANA
LOCAL FLOOD PROTECTION
STAGE VII - FLOODWALL

ADDITIONAL UTILITY CROSSINGS
ELEVATIONS AND DETAILS

SHEET REFERENCE NUMBER:
S-21

SHEET 72 OF 79

PLOT DATE: 2/6/2009
FILENAME: C:\Documents and Settings\h6tesegs\My Documents\D Drive\working\dms32217\LCS7_S-21FN.dgn

LCS7_S-21FN.dgn 2/6/2009 2:47:11 PM

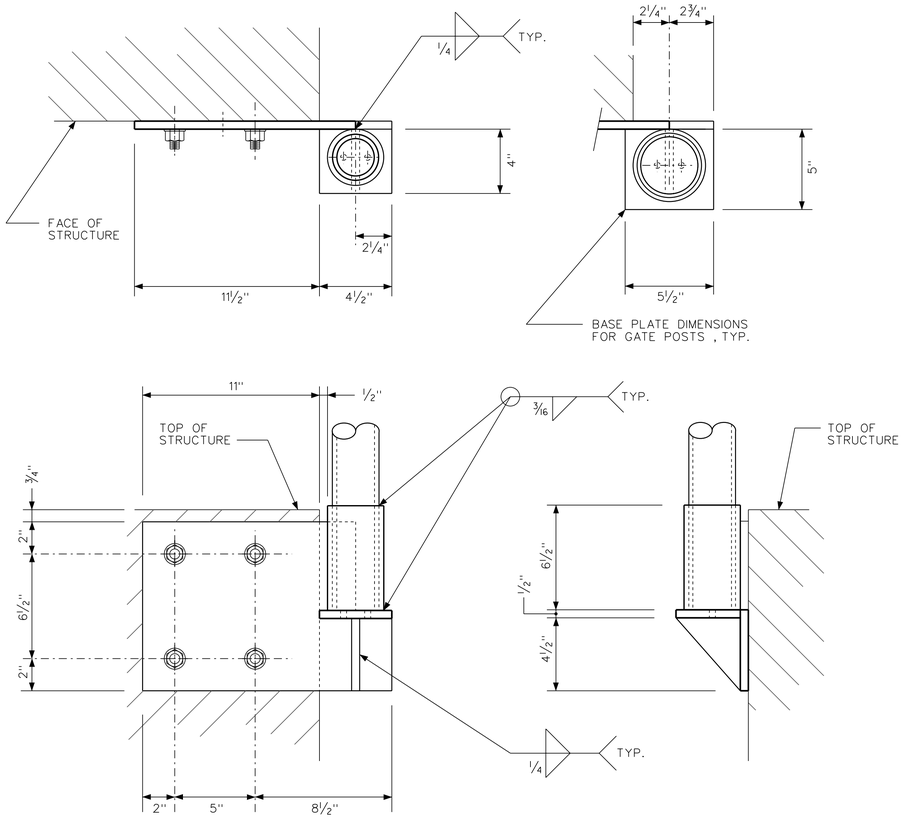

OUTSIDE CORNER BRACKET

NTS

CONCRETE NOTES:

1. UNLESS OTHERWISE INDICATED, ALL REINFORCING SHALL BE DETAILED IN ACCORDANCE WITH THE LATEST EDITION OF ACI 318, BUILDING CODE AND COMETARY.

2. ALL REINFORCING CLEAR COVER SHALL BE 2" TYPICAL FOR MEMBERS 12" THICK OR LESS AND SHALL BE 3" TYPICAL FOR MEMBERS GREATER THAN 12" THICK UNLESS OTHERWISE NOTED.

FENCE NOTES:

1. THE TOP OF THE FENCE SHALL BE 8'-0" ABOVE THE TOP OF THE STRUCTURE.

2. ALL FENCE POST AND GATE FENCE POSTS, SHALL BE STANDARD WEIGHT STEEL PIPE CONFORMING TO ASTM A53 GRADE B.

3. ALL PIPE SLEEVES FOR THE FENCE POSTS AND GATE POSTS SHALL BE STANDARD WEIGHT STEEL PIPE CONFORMING TO ASTM A53 GRADE B.

4. ALL MISCELLANEOUS METAL PARTS, EXCEPT FOR THE EXPANSION ANCHORS SHALL BE HOT -DIPPED GALVANIZED AFTER FABRICATION.

5. ALL STEEL PLATE USED TO FABRICATE THE FENCE BRACKETS SHALL BE 1/2" THICK ASTM A36.

6. ALL GATE COMPONENTS SHALL CONFORM TO SPECIFICATION SECTION 01 56 26.03 EXCEPT AS MODIFIED ON THESE DRAWINGS.

7. WELD POSTS TO FENCE BRACKETS PRIOR TO GALVANIZING.

8. SEE SHEET S-01 FOR FENCE BRACKET LOCATIONS.

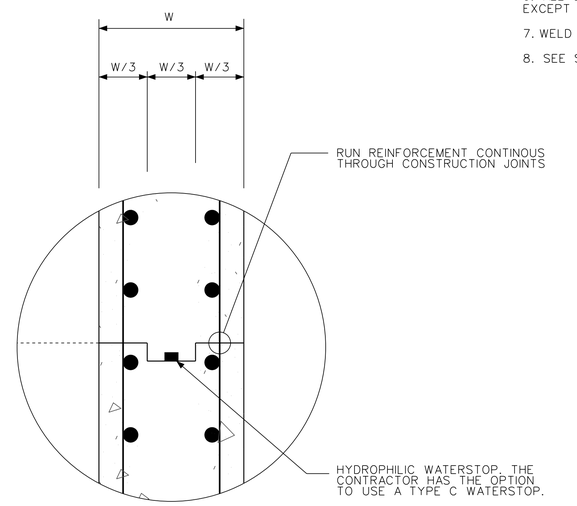

TYPICAL KEYED CONSTRUCTION JOINT

NTS

5 S2 S22

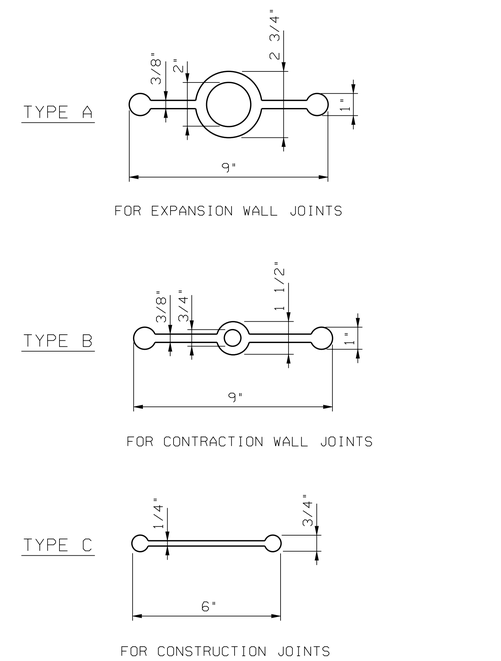

WATERSTOP DETAILS

NTS

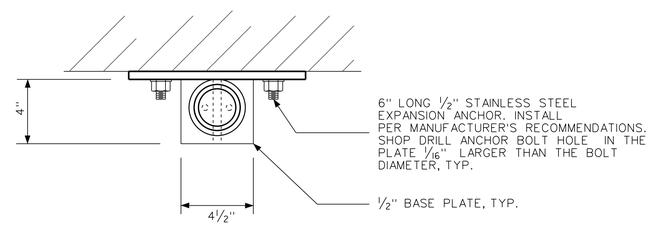

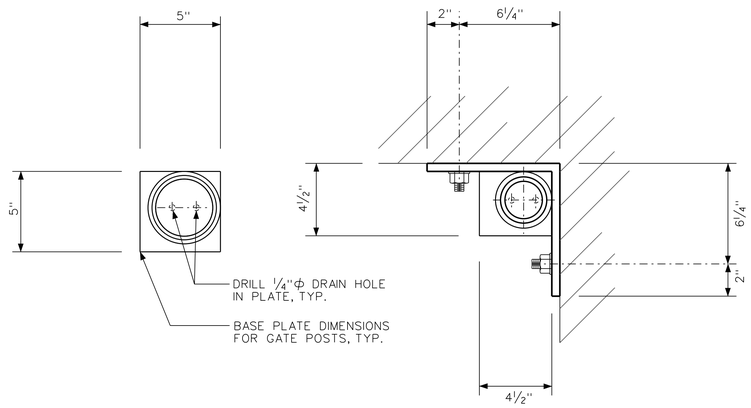

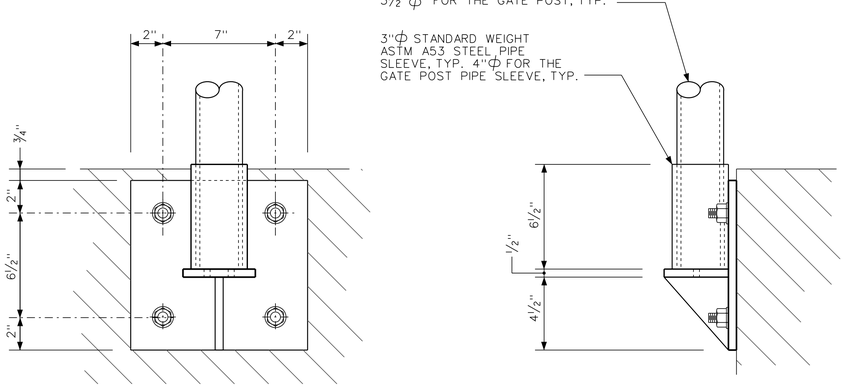

FACE BRACKET

NTS

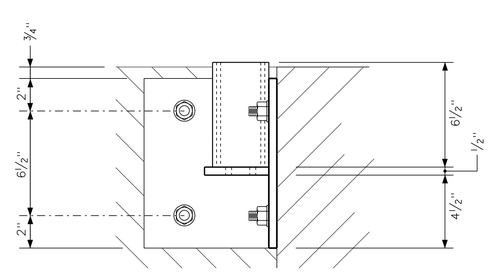

INSIDE CORNER BRACKET

NTS

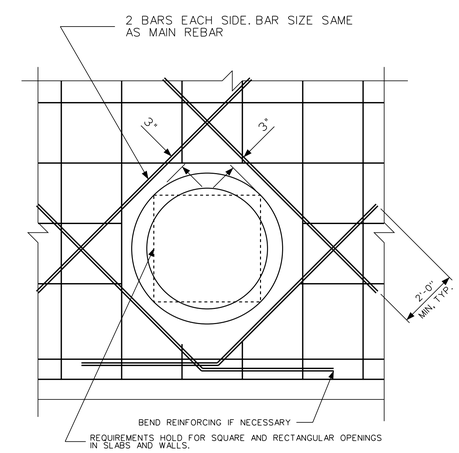

TYP. REINFORCING AT OPENINGS

NTS

US Army Corps of Engineers
Chicago District

SYMBOL	AMENDMENT DESCRIPTION	DATE APPROVED	SYMBOL	DESCRIPTION	DATE APPROVED

DESIGNED BY: EGS
DATE: FEBRUARY 2009
DRAWN BY: EGS
SCALE: AS SHOWN
CHECKED BY: JJS
SOLICITATION NUMBER:
SUBMITTED BY: STEPHEN TREHARNE, P.E.
DATE: 7/31/08

U.S. ARMY ENGINEER DISTRICT
CORPS OF ENGINEERS
CHICAGO, ILLINOIS

LITTLE CALUMET RIVER, INDIANA
LOCAL FLOOD PROTECTION
STAGE VII - FLOODWALL

STANDARD CONSTRUCTION DETAILS AND NOTES

SHEET REFERENCE NUMBER:
S-22
SHEET 73 OF 79

PLOT DATE: 2/6/2009
FILENAME: C:\Documents and Settings\kbleseg\My Documents\D Drive\working\dms32217\LCS7_S-22FN.dgn

LCS7_S-22FN.dgn 2/6/2009 2:51:08 PM

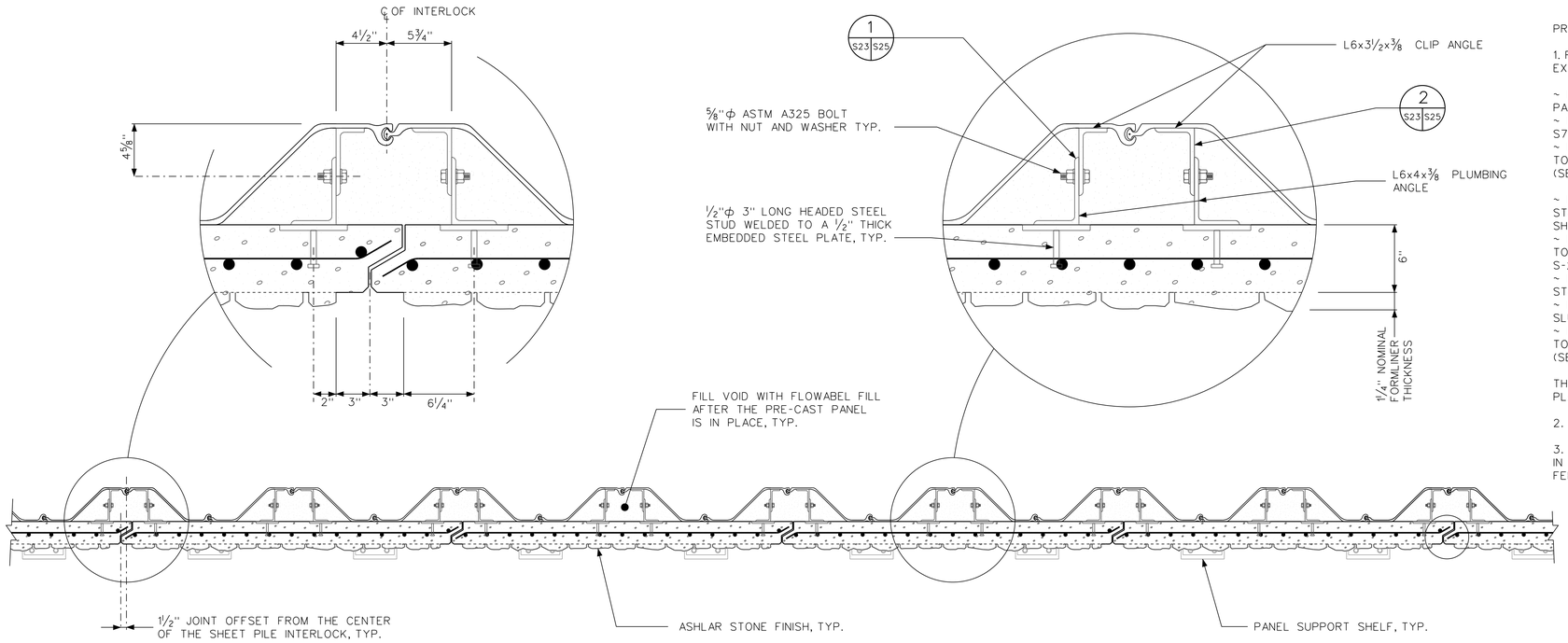

SECTION A (S23 S23)
SCALE A

PRE-CAST PANEL NOTES:

1. FOR THE PRE-CAST ALTERNATIVE, PRE-CAST PANELS SHALL BE USED EXCEPT FOR THE FOLLOWING LOCATIONS:

~ FROM STATION 7S 0+00 TO PILASTER S3 WHICH INCLUDES PIPE PASSING 7S 2+15 (SEE SHEET S-17).
~ FROM PILASTER S8 TO PILASTER S9 WHICH INCLUDES PIPE PASSING S7 15+00 (SEE SHEET S-18).
~ FROM THE EXPANSION JOINT AT APPROXIMATELY STATION 7S 51+03 TO STATION 7S 52+53 WHICH INCLUDES SEVERAL UTILITY CROSSINGS (SEE SHEET S-21).

~ FROM STATION 7N 0+00 TO THE CONTRACTION JOINT AT APPROXIMATELY STATION 7N 1+62.33 WHICH INCLUDES THE COLUMBIA AVE GATEWELL (SEE SHEET S-01) AND THE 7N 1+50 PIPE PASSING (SEE SHEET S-19).
~ FROM THE CONTRACTION JOINT AT APPROXIMATELY STATION 7N 15+55.5 TO PILASTER N10 WHICH INCLUDES THE 7N 15+68 PIPE PASSING (SEE SHEET S-20).
~ FROM PILASTERS N14 TO N15 WHICH INCLUDES THE WALNUT ST PUMP STATION OUTLET (SEE SHEET S-03).
~ FROM PILASTERS N24 TO N25 WHICH INCLUDES THE NORTHCOTE GATED SLUICE STRUCTURE (SEE SHEET S-06).
~ FROM THE EXPANSION JOINT AT APPROXIMATELY STATION 7N 50+29.75 TO STATION 7N 52+04 WHICH INCLUDES SEVERAL UTILITY CROSSINGS (SEE SHEET S-21).

THESE LOCATIONS SHALL BE CONSTRUCTED AS SHOWN IN THE APPLICABLE PLANS FROM THE SET SHEETS S-01 TO S-022.

2. SEE SHEET S-26 FOR PRE-CAST TO CAST IN PLACE TRANSITION DETAILS.

3. FOR THE PRE-CAST ALTERNATIVE INTERLOCK SEALANT SHALL BE USED IN THE SHEET PILE INTERLOCKS FROM THE TOP OF THE PILE TO FIVE (5) FEET BELOW GRADE.

4. THE SHEET PILE FOR THE PRE-CAST ALTERNATIVE SHALL BE PLUM TO WITHIN ½" (ONE HALF INCH) OVER THE LENGTH OF THE PRE-CAST PANEL.

5. THE PRE-CAST ALTERNATIVE SHALL BE CONSTRUCTED USING PILASTERS IN THE LOCATIONS SHOWN IN THE TABLES ON SHEETS S-12 AND S-13 AND ON THE CIVIL PLAN AND PROFILE SHEETS. EXTRA PILASTERS SHALL BE USED AT EXPANSION AND CONTRACTION JOINTS WHERE INDICATED IN NOTE 1 ABOVE.

6. FABRICATED BENDS SHALL BE USED FOR THE PRE-CAST ALTERNATIVE SHEET PILE WALL BENDS.

NOTE: SEVERAL SECTIONS OF THE FLOOD WALL ON BOTH THE NORTH AND SOUTH SIDE OF THE RIVER ARE CAST-IN-PLACE CONCRETE CONSTRUCTION INSTEAD OF PRE-CAST. PLEASE SEE NOTE 1 ON THIS SHEET.

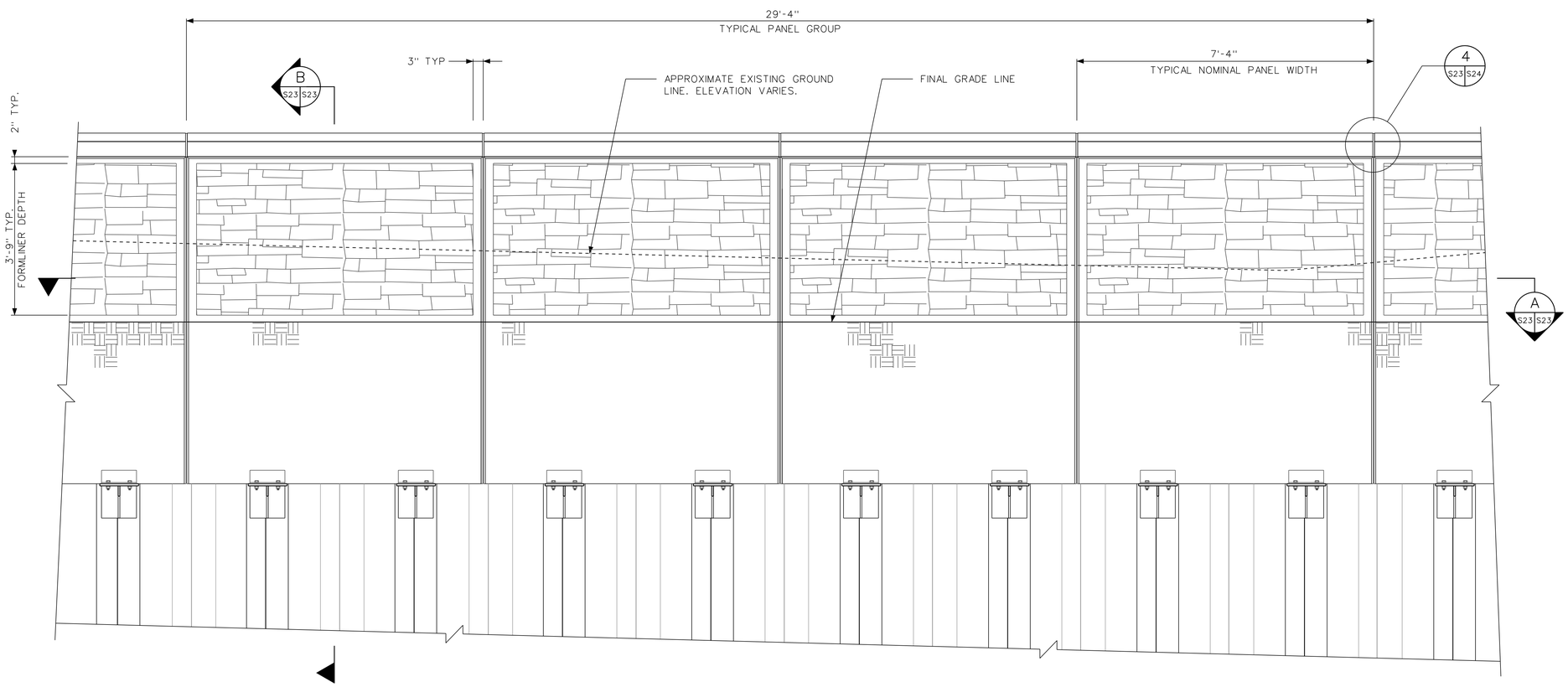

ELEVATION
SCALE A

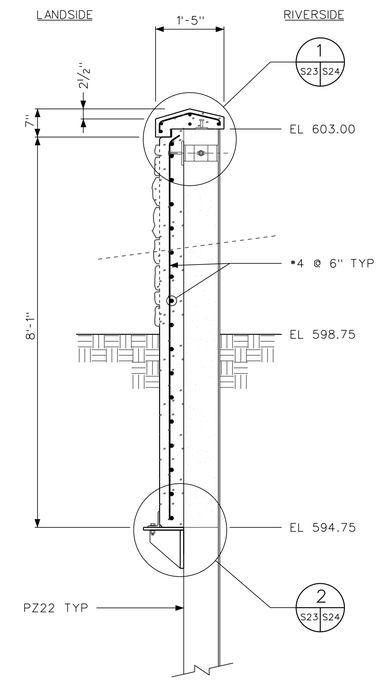

SECTION B (S23 S23)
SCALE A

SCALE A: 12 0 1 2 3

US Army Corps of Engineers
Chicago District

SYMBOL	AMENDMENT DESCRIPTION	DATE APPROVED	SYMBOL	DESCRIPTION	DATE APPROVED

DESIGNED BY: EGS | DATE: FEBRUARY 2009
DRAWN BY: EGS | SCALE: AS SHOWN
CHECKED BY: JJS | SOLICITATION NUMBER: W912P6-09-B-0002
SUBMITTED BY: STEPHEN TRECHARNE, P.E. | DATE: 7/31/08

U.S. ARMY ENGINEER DISTRICT
CORPS OF ENGINEERS
CHICAGO, ILLINOIS

LITTLE CALUMET RIVER, INDIANA
LOCAL FLOOD PROTECTION
STAGE VII - FLOODWALL
PRE-CAST ALTERNATIVE
ELEVATION AND SECTIONS

SHEET REFERENCE NUMBER:
S-23
SHEET 74 OF 79

PLOT DATE: 2/17/2009
FILENAME: C:\Documents and Settings\h16teesgs\My Documents\D Drive\working\dms32217\LCS7_S-23FN.dgn

LCS7_S-23FN.dgn 2/17/2009 1:03:27 PM

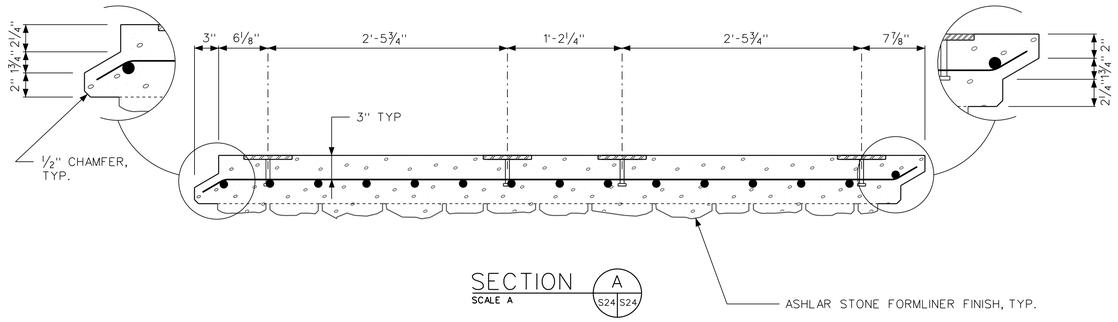

SECTION A (S24 S24)
SCALE A

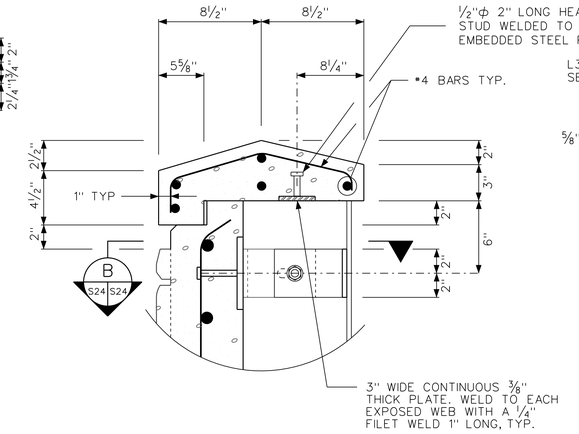

DETAIL 1 (S23 S24)
NTS

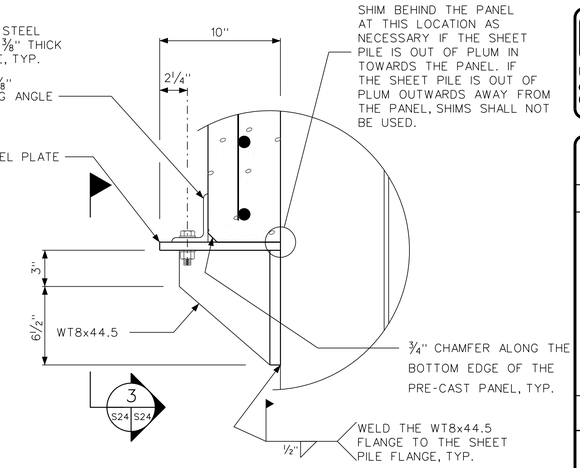

DETAIL 2 (S23 S24)
NTS

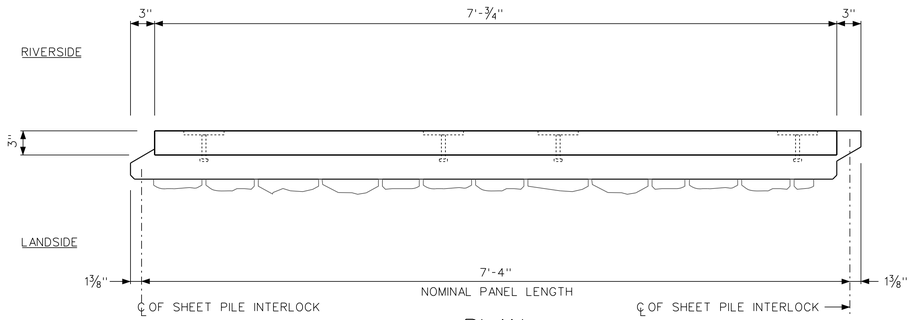

PLAN
SCALE A

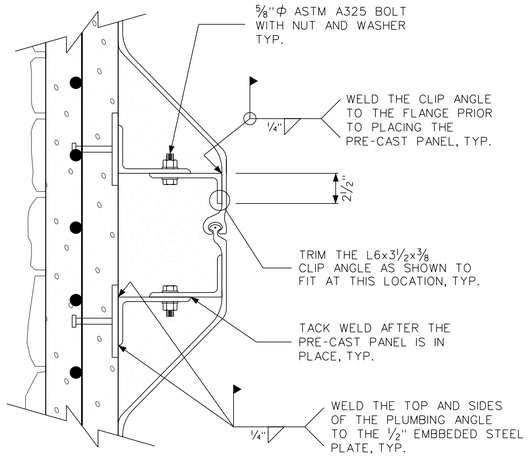

SECTION B (S24 S24)
SCALE A

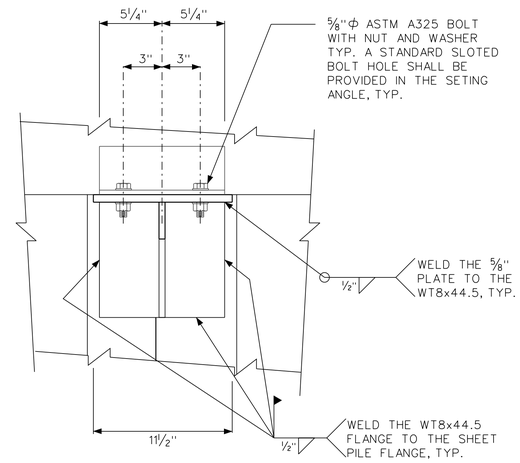

DETAIL 3 (S24 S24)
NTS

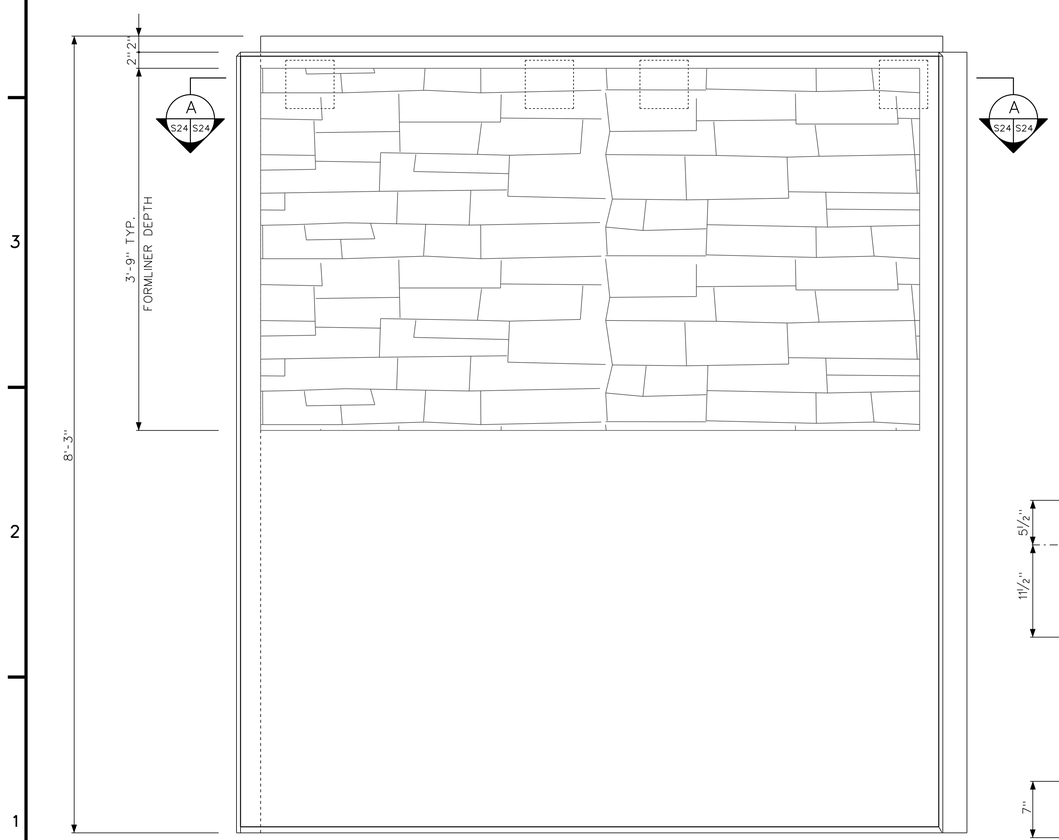

TYPICAL PANEL DIMENSIONS

ELEVATION
SCALE A

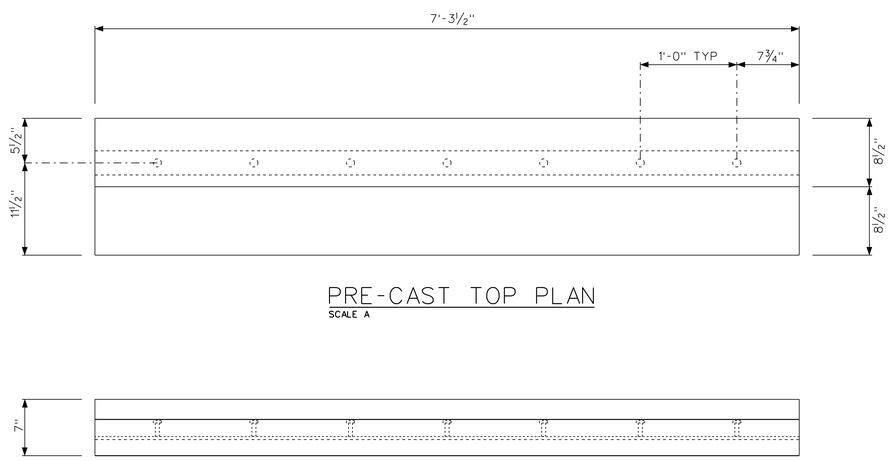

PRE-CAST TOP PLAN
SCALE A

PRE-CAST TOP ELEVATION
SCALE A

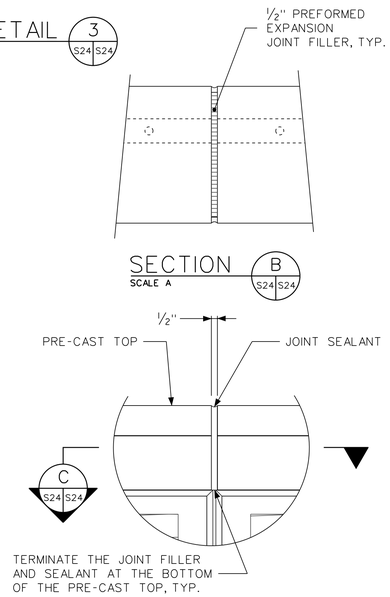

SECTION B (S24 S24)
SCALE A

DETAIL 4 (S23 S24)
NTS

12 0 1 2
SCALE A

US Army Corps of Engineers
Chicago District

SYMBOL	AMENDMENT DESCRIPTION	DATE APPROVED	SYMBOL	DESCRIPTION	DATE APPROVED

DESIGNED BY: EGS
DATE: FEBRUARY 2009
DRAWN BY: EGS
SCALE: AS SHOWN
CHECKED BY: JJS
SOLICITATION NUMBER: W912P6-09-B-0002
STEPHEN TREHARNE, P.E.
SUBMITTED BY:
DATE: 7/31/08

U.S. ARMY ENGINEER DISTRICT
CORPS OF ENGINEERS
CHICAGO, ILLINOIS

LITTLE CALUMET RIVER, INDIANA
LOCAL FLOOD PROTECTION
STAGE VII - FLOODWALL

PRE-CAST ALTERNATIVE SECTIONS AND DETAILS

SHEET REFERENCE NUMBER:
S-24
SHEET 75 OF 79

PLOT DATE: 2/6/2009
FILENAME: C:\Documents and Settings\hsteeges\My Documents\D Drive\working\dms32217\LCS7_S-24FN.dgn

LCS7_S-24FN.dgn 2/6/2009 2:53:45 PM

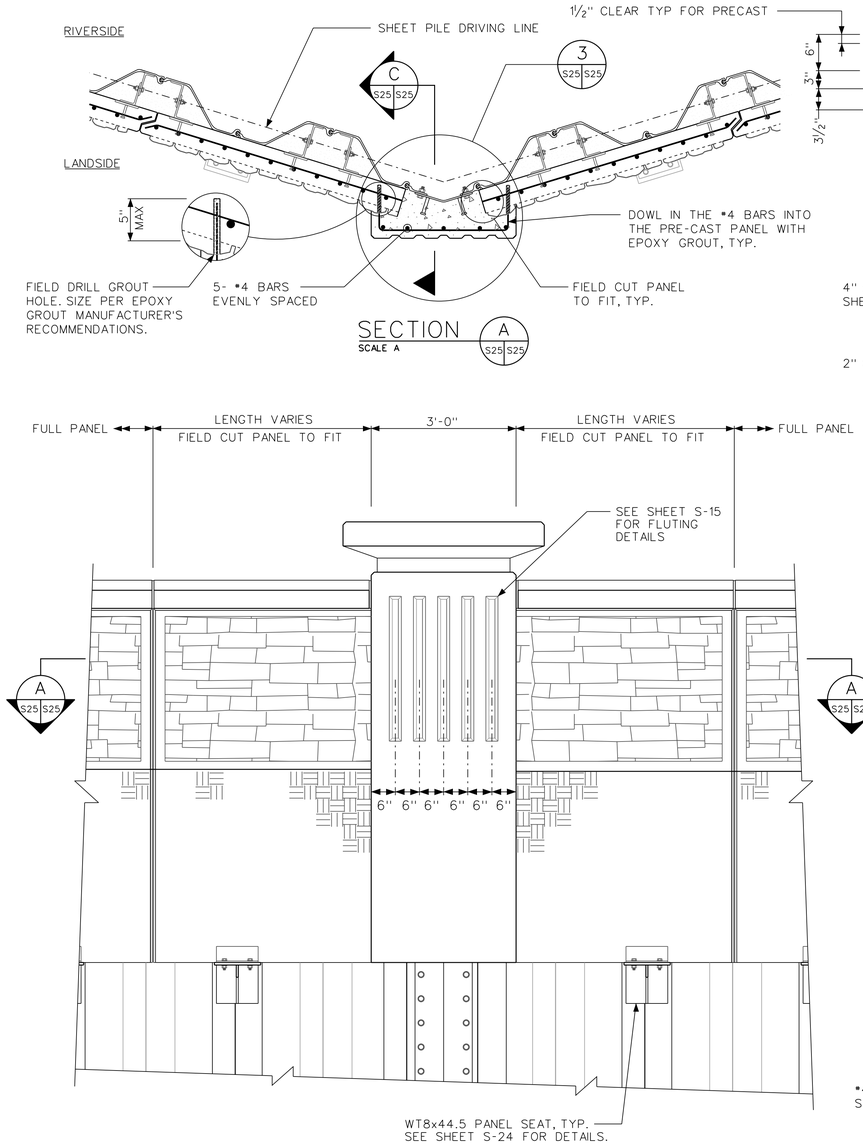

SECTION A
SCALE A

TYPICAL OUTSIDE CORNER ELEVATION
NTS

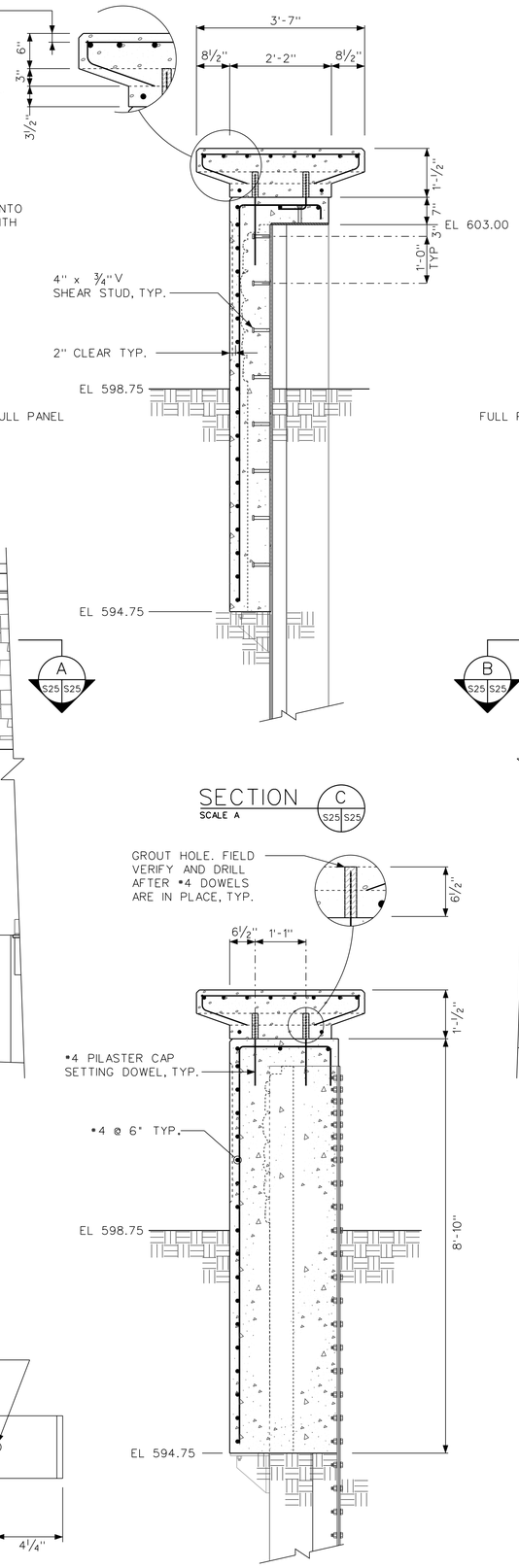

SECTION C
SCALE A

SECTION D
SCALE A

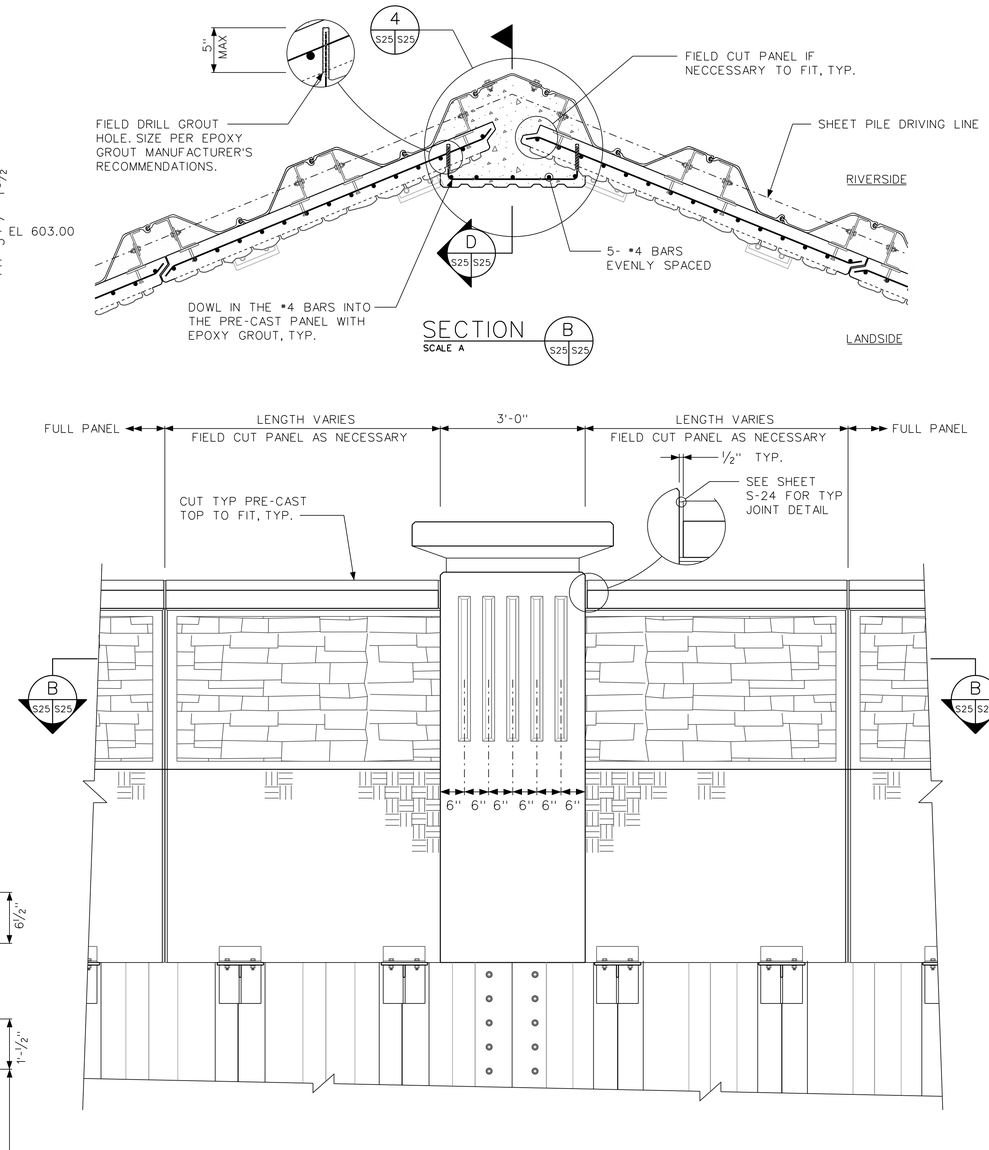

SECTION B
SCALE A

TYPICAL INSIDE CORNER ELEVATION
NTS

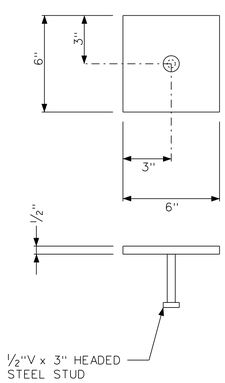

DETAIL 1
NTS

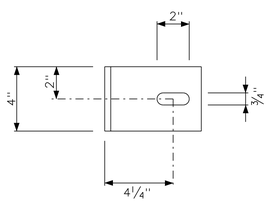

L6x4x⅜ PLUMBING ANGLE

DETAIL 1
NTS

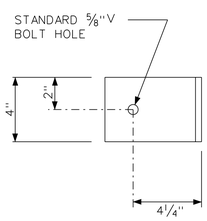

L6x3½x⅜ CLIP ANGLE

DETAIL 2
NTS

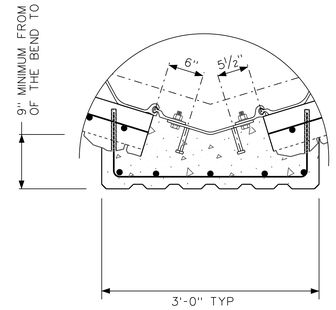

DETAIL 3
NTS

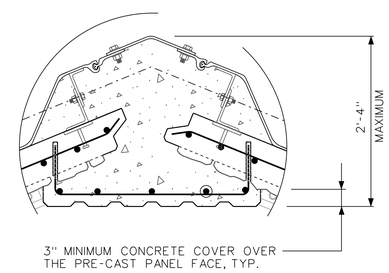

DETAIL 4
NTS

SCALE A

US Army Corps of Engineers
Chicago District

SYMBOL	AMENDMENT DESCRIPTION	DATE APPROVED	SYMBOL	DESCRIPTION	DATE APPROVED

DESIGNED BY: EGS
DATE: FEBRUARY 2009
DRAWN BY: EGS
SCALE: AS SHOWN
CHECKED BY: JJS
SOLICITATION NUMBER: W912P6-09-B-0002
SUBMITTED BY: STEPHEN TREHARNE, P.E.
DATE: 7/31/08

U.S. ARMY ENGINEER DISTRICT
CORPS OF ENGINEERS
CHICAGO, ILLINOIS

LITTLE CALUMET RIVER, INDIANA
LOCAL FLOOD PROTECTION
STAGE VII - FLOODWALL

PRE-CAST ALTERNATIVE
MISC. METALS AND
CORNER DETAILS

SHEET REFERENCE NUMBER:
S-25
SHEET 76 OF 79

PLOT DATE: 2/6/2009
FILENAME: C:\Documents and Settings\HEsterga\My Documents\D Drive\working\dms32217\LCS7_S-25FN.dgn

LCS7_S-25FN.dgn 2/6/2009 2:54:58 PM

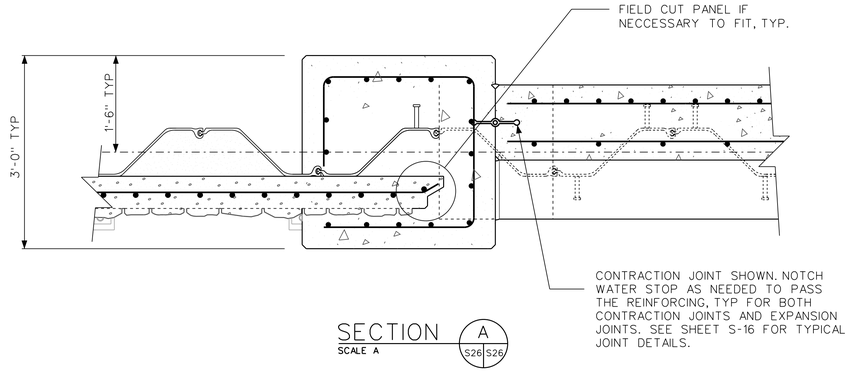

SECTION A (S26/S26)
SCALE A

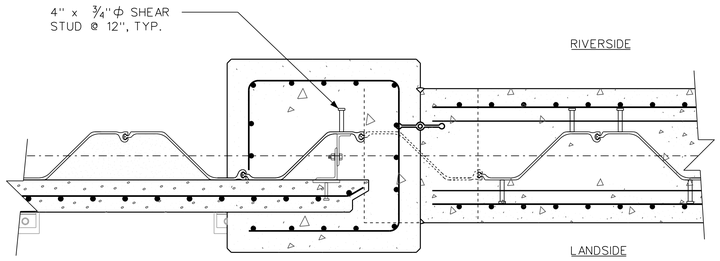

NOTE: FLOODWALL ORIENTATION SHOWN WITH A CONTRACTION JOINT. THE DESIGN IS TYPICAL FOR BOTH FLOODWALLS AND RETAINING WALLS, CONTRACTION JOINTS AND EXPANSION JOINTS.

SECTION B (S26/S26)
SCALE A

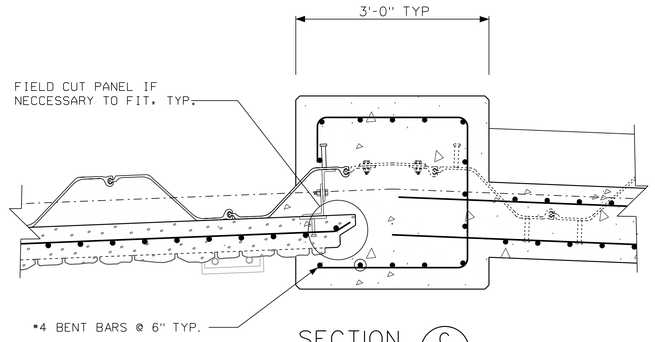

SECTION C (S26/S26)
SCALE A

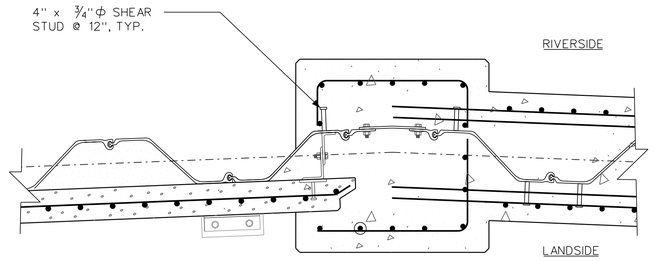

NOTE: RETAINING WALL ORIENTATION SHOWN. THE DESIGN IS TYPICAL FOR BOTH FLOODWALLS AND RETAINING WALLS.

SECTION D (S26/S26)
SCALE A

NOTES:

1. ALL CONCRETE WALL, PILASTER, AND PRE-CAST PANEL DESIGNS SHOWN ELSEWHERE IN THIS SET HOLD EXCEPT AS MODIFIED ON THIS SHEET.

2. SEE SHEETS S-12 AND S-13 FOR TYPICAL FLOODWALL RETAINING WALL DETAILS.

3. SEE SHEET S-15 FOR TYPICAL PILASTER DETAILS.

4. SEE SHEET S-23 FOR PRE-CAST PANEL ALTERNATIVE NOTES.

5. THE JOINT ELEVATION VIEW DETAILS THE TRANSITION BETWEEN THE PRE-CAST PANELS AND THE CAST-IN-PLACE WALL SECTIONS AT EXPANSION AND CONTRACTION JOINTS. THE PILASTERS ARE ADDITIONAL TO THE PILASTERS SHOWN ON THE CIVIL PLAN AND PROFILE SHEETS AND THOSE IDENTIFIED IN THE TABLES ON SHEETS S-12 AND S-13. THE JOINT PILASTERS ARE NOT SHOWN ON THE CIVIL PLAN AND PROFILE SHEETS. SEE NOTE 1 ON SHEET S-23 FOR LOCATIONS OF THE JOINT PILASTERS.

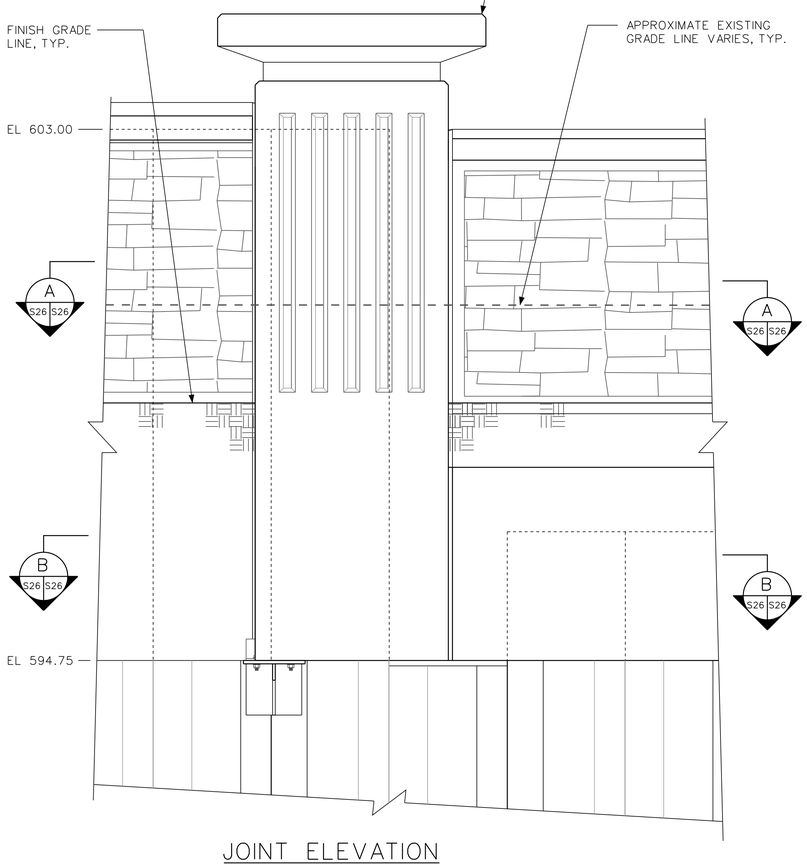

JOINT ELEVATION
SCALE A

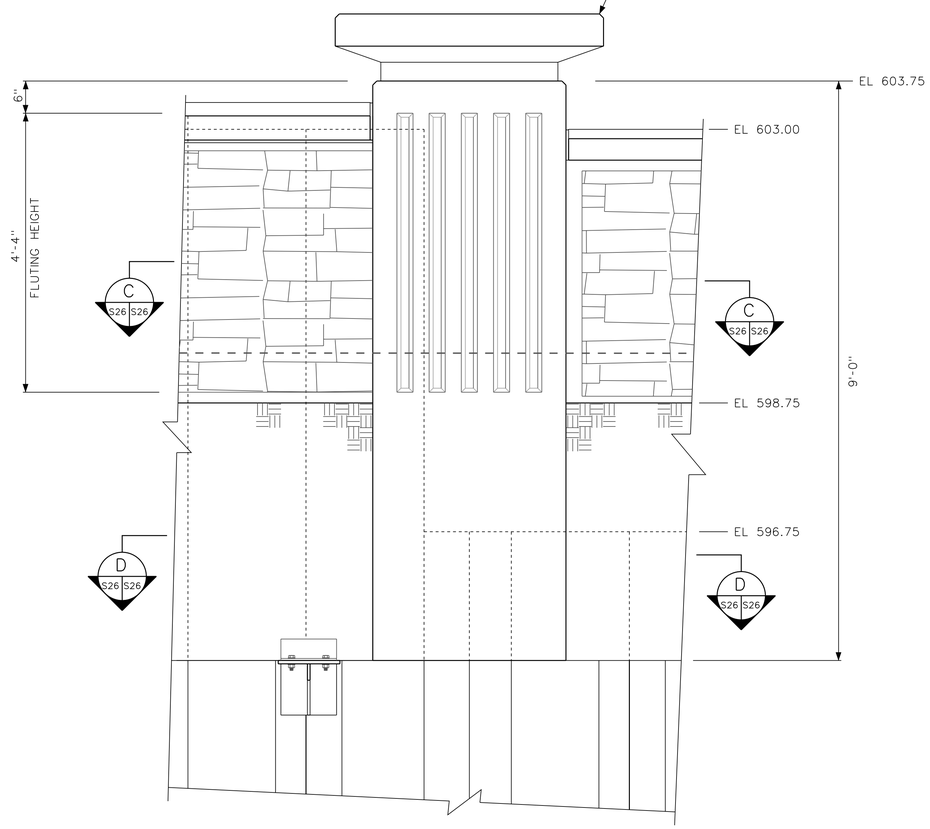

BEND ELEVATION
SCALE A

12 0 1 2
SCALE A

US Army Corps of Engineers
Chicago District

SYMBOL	AMENDMENT DESCRIPTION	DATE APPROVED	SYMBOL	DESCRIPTION	DATE APPROVED

DESIGNED BY: ECS
DATE: FEBRUARY 2009
DRAWN BY: ECS
SCALE: AS SHOWN
CHECKED BY: JJS
SOLICITATION NUMBER: W912P6-09-B-0002
SUBMITTED BY: STEPHEN TRECHARNE, P.E.
DATE: 7/31/08

U.S. ARMY ENGINEER DISTRICT
CORPS OF ENGINEERS
CHICAGO, ILLINOIS

LITTLE CALUMET RIVER, INDIANA
LOCAL FLOOD PROTECTION
STAGE VII - FLOODWALL

PRE-CAST ALTERNATIVE
PRE-CAST TO CAST IN
PLACE TRANSITION DETAILS

SHEET REFERENCE NUMBER:
S-26
SHEET 76 OF 79

PLOT DATE: 2/6/2009
FILENAME: C:\Documents and Settings\Mv Documents\O Drive\working\dms32217\LCS7_S-26FN.dgn

LCS7_S-26FN.dgn 2/6/2009 2:55:54 PM

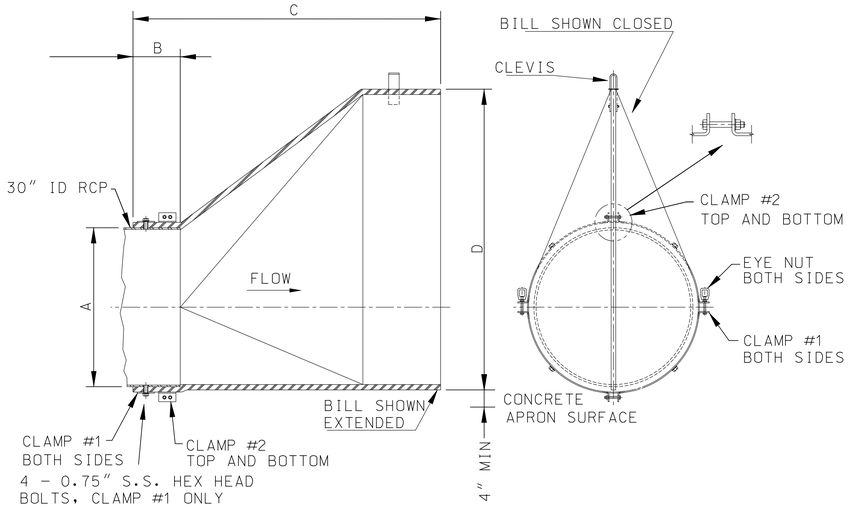

COLUMBIA AVENUE FLEXIBLE VALVE DETAIL

N.T.S.

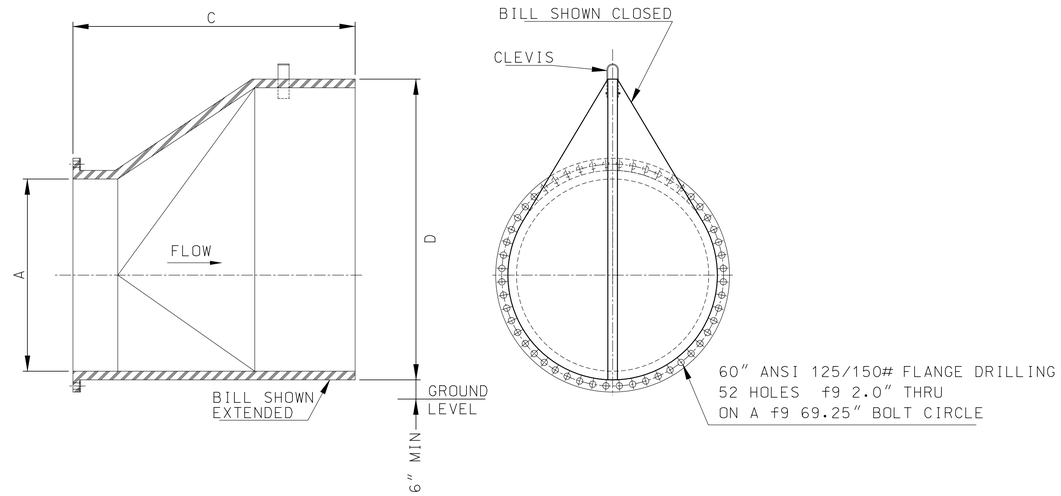

60" FLEXIBLE VALVE DETAIL

N.T.S.

SLUICE GATE SCHEDULE								
GATE LOCATION	No. OF GATES	SIZE (IN.)	A	B	C	D	E	F
COLUMBIA AVENUE SLUICE STRUCTURE	1	30X30	38.00"	19.00"	———	32.87"	6.37"	8.87"
60" GATED SLUICE STRUCTURE	1	60X60	73.00"	36.50"	———	65.50"	10.00"	17.37"

FLEXIBLE CHECK VALVE SCHEDULE						
GATE LOCATION	No. OF GATES	SIZE (IN.)	A	B	C	D
COLUMBIA AVENUE SLUICE STRUCTURE	1	37.00"	37.00"	11.00"	72.00"	70.00"
60" GATED SLUICE STRUCTURE	1	60.00"	60.00"	———	88.00"	94.00"

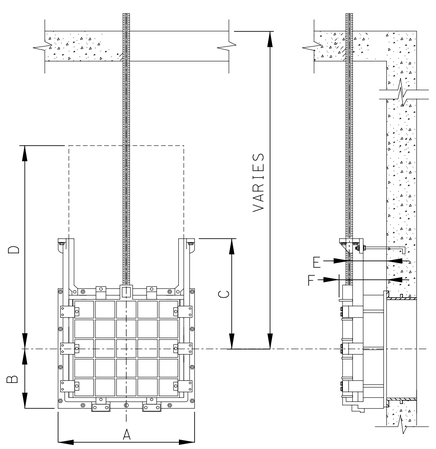

TYPICAL SLUICE GATE DETAIL

N.T.S.

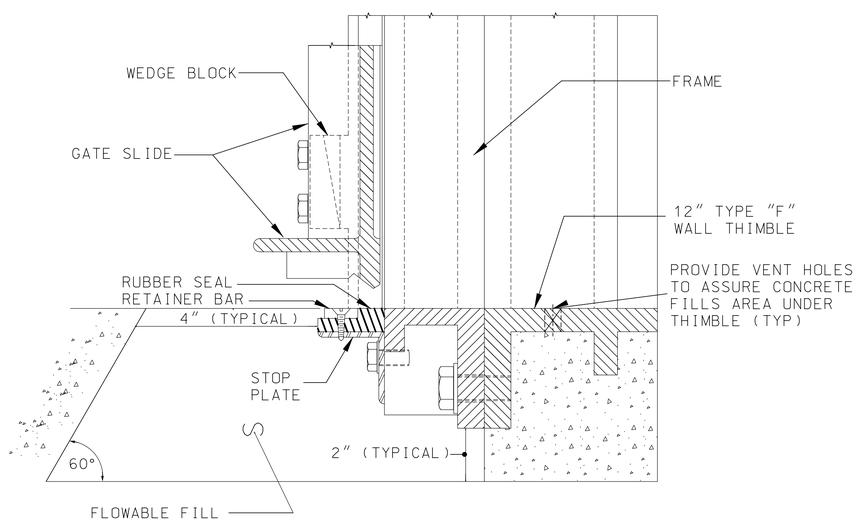

TYPICAL FLUSH BOTTOM SLUICE GATE ENCLOSURE

N.T.S.

NOTES:

1. GATE DIMENSIONS AND HARDWARE MAY VARY. THE CONTRACTOR SHALL BE RESPONSIBLE FOR OBTAINING THE GATE DIMENSIONS.
2. CONTRACTOR SHALL COORDINATE THE OPENING HE PROVIDES WITH MANUFACTURERS DATA.
3. WALL THIMBLE SHALL BE STANDARD DESIGN TYPE "F" AS SHOWN. WALL THICKNESS MAY VARY WITH MANUFACTURER. WALL THIMBLE SHALL BE SET BEFORE CONCRETE IS PLACED.
4. DIMENSIONS MAY VARY WITH MANUFACTURER OF GATE AND VALVE.
5. WALL THIMBLE FACES, GATE AND VALVE SHALL BE MOUNTED IN VERTICAL POSITION. THIMBLES SHALL BE SET FLUSH WITH CONCRETE SURFACES.
6. PROVIDE ENCLOSED GEAR LIFT ON FLOOR AS SHOWN FOR OPERATION.
7. STEM GUIDE WILL BE REQUIRED TO MAINTAIN THE ALIGNMENT AND PREVENT BUCKLING OF THE STEM. STEM GUIDE MUST BE PLACED ON A CENTER TO CENTER DISTANCE THAT WILL LIMIT THE L/R RATIO OF THE STEM TO 200 OR LESS.
8. ALL MECHANICAL EQUIPMENT SHALL BE INSTALLED IN ACCORDANCE WITH MANUFACTURER'S RECOMMENDATION AND AS APPROVED BY THE GOVERNMENT.
9. THE CONTRACTOR SHALL VERIFY THE OUTSIDE OF DIAMETER OF THE COLUMBIA AVENUE RCP TO ASSURE THE CORRECT FIT WITH THE FLEXIBLE VALVE.

US Army Corps of Engineers
Chicago District

SYMBOL	AMENDMENT DESCRIPTION	DATE APPROVED	SYMBOL	DESCRIPTION	DATE APPROVED

DESIGNED BY: RCS
DATE: FEBRUARY 2009
DRAWN BY: RCS
SCALE: AS SHOWN
CHECKED BY: KVZ
SOLICITATION NUMBER: W912P6-09-B-0002
STEPHEN TREHARNE P.E. 7/31/08
SUBMITTED BY: DATE:

U.S. ARMY ENGINEER DISTRICT
CORPS OF ENGINEERS
CHICAGO, ILLINOIS

LITTLE CALUMET RIVER, INDIANA
LOCAL FLOOD PROTECTION
STAGE VII - FLOODWALL

COLUMBIA AVENUE
AND 60" GATED
SLUICE STRUCTURE

SHEET REFERENCE NUMBER:
M-01
SHEET 78 OF 79

PLOT DATE: 2/13/2009
FILENAME: C:\Documents and Settings\h16ecmc5\My Documents\PW_Working_Directory_MC\dms17096\M1.dgn

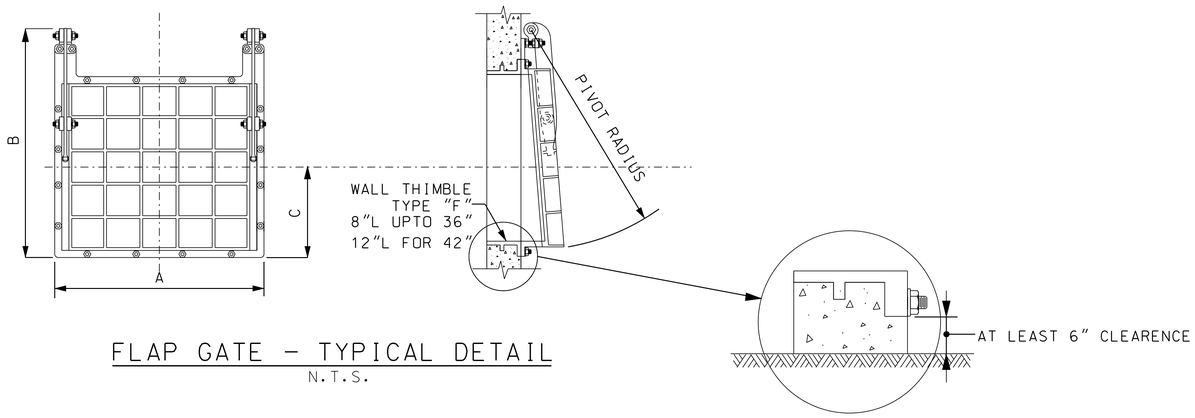

FLAP GATE - TYPICAL DETAIL

N.T.S.

FLAP GATE SCHEDULE					
GATE LOCATION	No. OF GATES	SIZE (IN.)	A	B	C
OUTLET STRUCTURE	1	48x48	57.50	66.50	28.75
OUTLET STRUCTURE	1	60x60	69.50	81.75	34.75

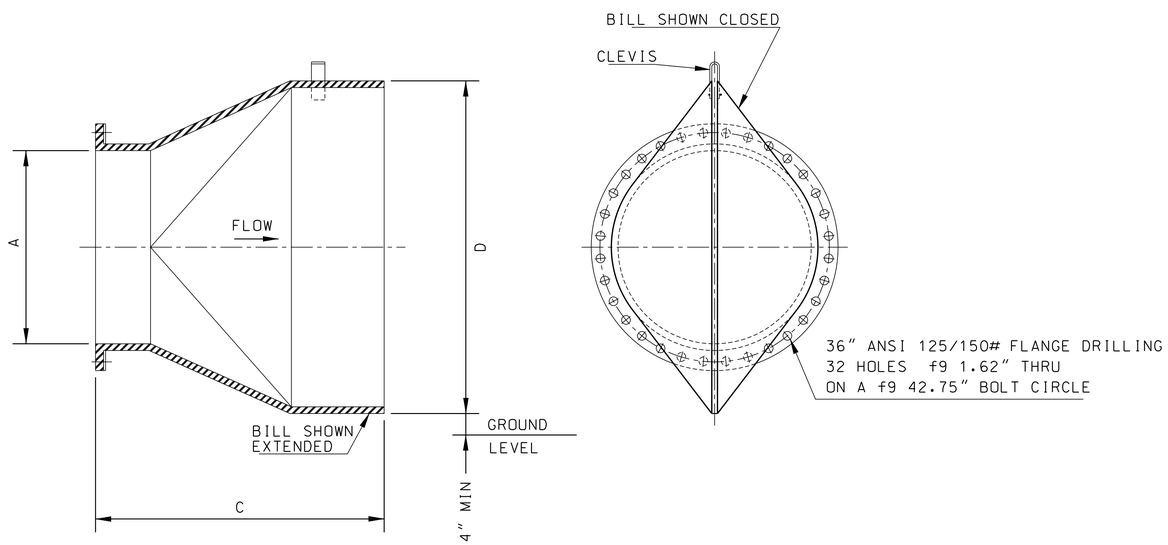

FLEXIBLE VALVE DETAIL

N.T.S.

FLEXIBLE CHECK VALVE SCHEDULE						
GATE LOCATION	No. OF GATES	SIZE (IN.)	A	B	C	D
OUTLET STRUCTURE	1	36.00"	36.00"	———	54.00"	62.00"

NOTES:

1. GATE DIMENSIONS AND HARDWARE MAY VARY. THE CONTRACTOR SHALL BE RESPONSIBLE FOR OBTAINING THE GATE DIMENSIONS.
2. CONTRACTOR SHALL COORDINATE THE OPENING HE PROVIDES WITH MANUFACTURERS DATA.
3. WALL THIMBLE SHALL BE STANDARD DESIGN TYPE "F" AS SHOWN. WALL THICKNESS MAY VARY WITH MANUFACTURER. WALL THIMBLE SHALL BE SET BEFORE CONCRETE IS PLACED.
4. DIMENSIONS MAY VARY WITH MANUFACTURER OF GATE AND VALVE.
5. WALL THIMBLE FACES, GATE AND VALVE SHALL BE MOUNTED IN VERTICAL POSITION. THIMBLES SHALL BE SET FLUSH WITH CONCRETE SURFACES.
6. PROVIDE ENCLOSED GEAR LIFT ON FLOOR AS SHOWN FOR OPERATION.
7. STEM GUIDE WILL BE REQUIRED TO MAINTAIN THE ALIGNMENT AND PREVENT BUCKLING OF THE STEM. STEM GUIDE MUST BE PLACED ON A CENTER TO CENTER DISTANCE THAT WILL LIMIT THE L/R RATIO OF THE STEM TO 200 OR LESS.
8. ALL MECHANICAL EQUIPMENT SHALL BE INSTALLED IN ACCORDANCE WITH MANUFACTURER'S RECOMMENDATION AND AS APPROVED BY THE GOVERNMENT.

US Army Corps of Engineers
Chicago District

SYMBOL	AMENDMENT DESCRIPTION	DATE APPROVED	SYMBOL	DESCRIPTION	DATE APPROVED

DESIGNED BY: RCS | DATE: FEBRUARY 2009
DRAWN BY: RCS | SCALE: AS SHOWN
CHECKED BY: KVZ | SOLICITATION NUMBER: W912P6-09-B-0002
SUBMITTED BY: STEPHEN TREHARNE P.E. | DATE: 7/31/08

U.S. ARMY ENGINEER DISTRICT
CORPS OF ENGINEERS
CHICAGO, ILLINOIS

LITTLE CALUMET RIVER, INDIANA
LOCAL FLOOD PROTECTION
STAGE VII - FLOODWALL

WALNUT STREET
PUMP STATION
OUTLET STRUCTURE

SHEET REFERENCE NUMBER:
M-02
SHEET 79 OF 79

PLOT DATE: 2/13/2009
FILENAME: C:\Documents and Settings\hbiecmc9\My Documents\PW_Working_Directory_MC\dms17096\M2.dgn

M2.dgn 2/13/2009 5:53:37 PM