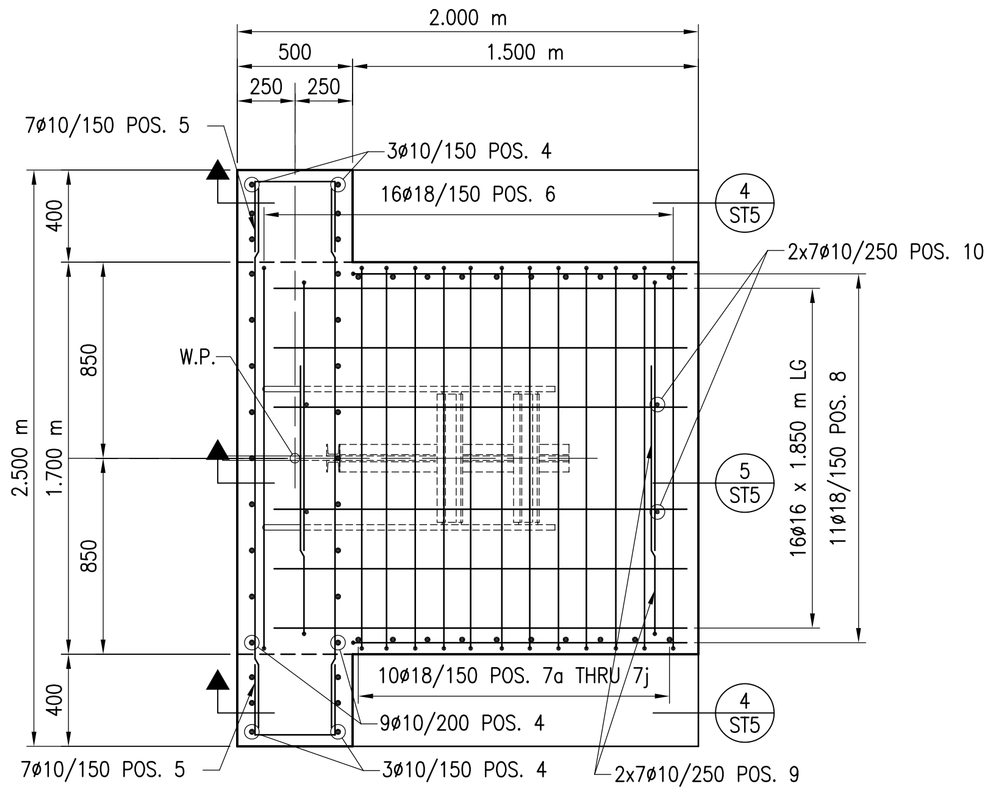

1 ST5 PLAN – COUNTERFORT REINFORCEMENT
1:20

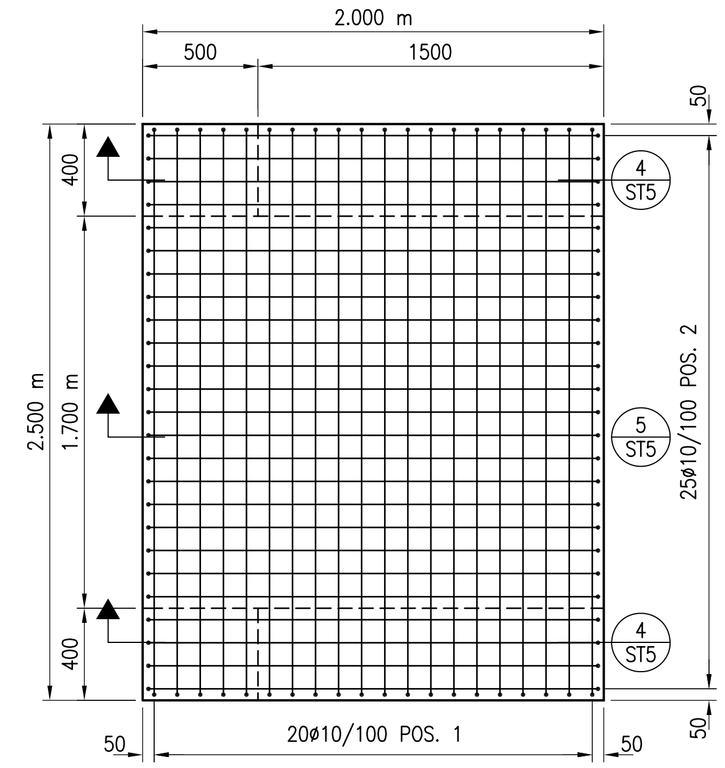

2 ST5 PLAN – LOWER REINFORCEMENT
1:20

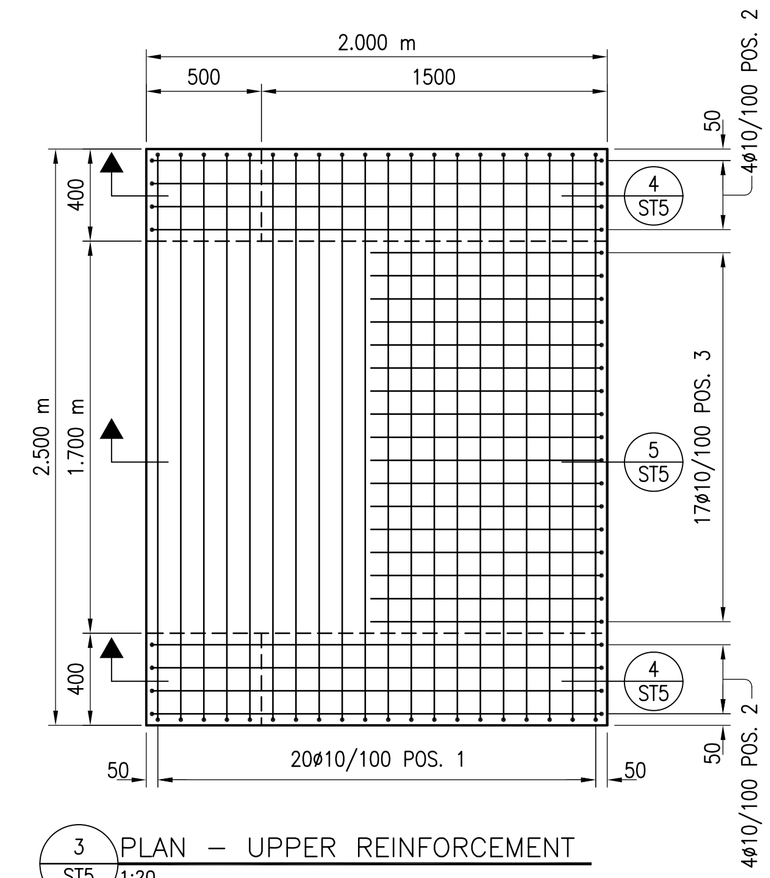

3 ST5 PLAN – UPPER REINFORCEMENT
1:20

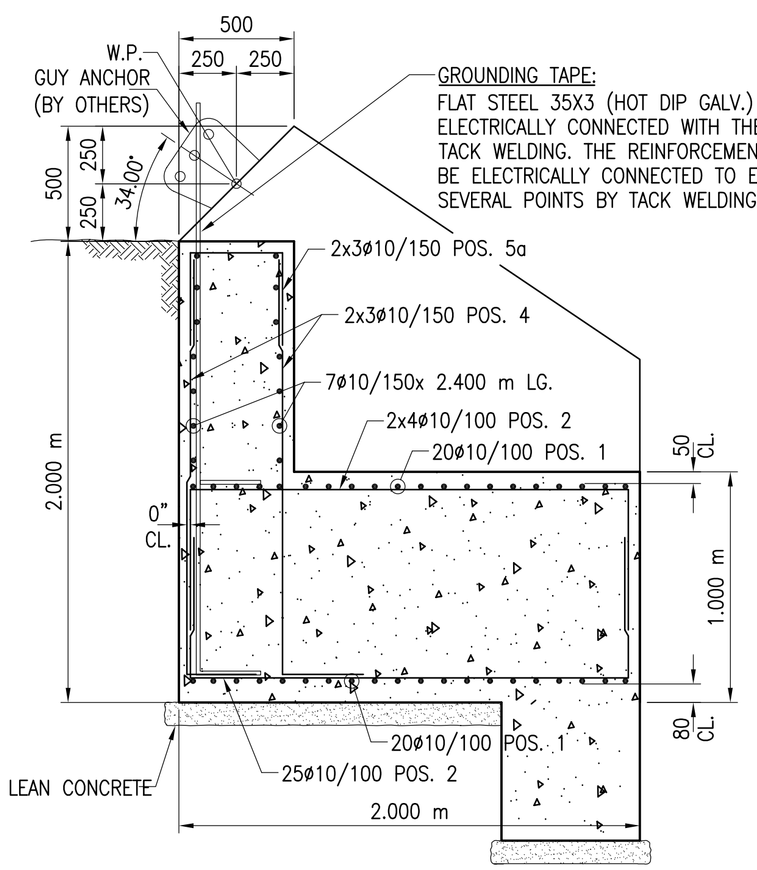

GROUNDING TAPE:
FLAT STEEL 35X3 (HOT DIP GALV.) SHALL BE ELECTRICALLY CONNECTED WITH THE REINFORCEMENT BY TACK WELDING. THE REINFORCEMENT STEEL BARS SHALL BE ELECTRICALLY CONNECTED TO EACH OTHER AT SEVERAL POINTS BY TACK WELDING.

4 ST5 SECTION – TYPE D
1:20

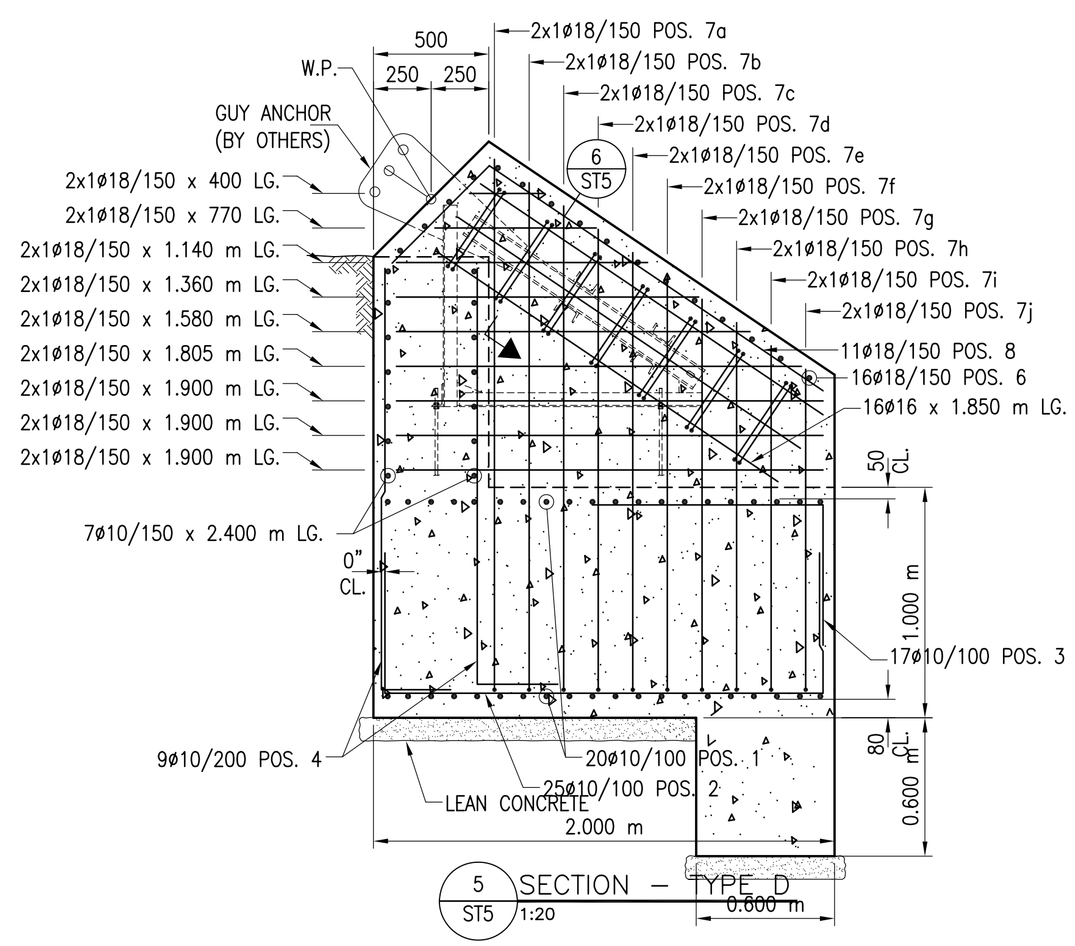

5 ST5 SECTION – TYPE D
1:20

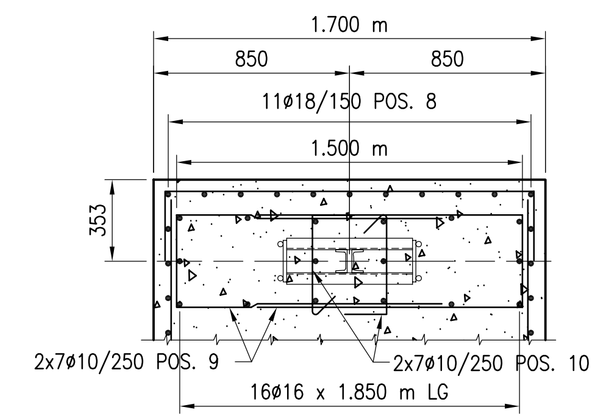

6 ST5 SECTION – TYPE D
1:20

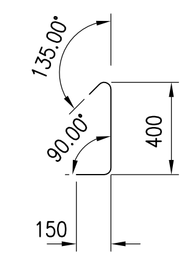

POS. 10
LG. = 640

NOTE:
ALL DIMENSIONS ARE IN MILLIMETERS UNLESS OTHERWISE NOTED.

CONCRETE COVER: 50mm ALL SURFACES EXCEPT BOTTOM OF FOOTINGS: 80mm.

AS BUILT

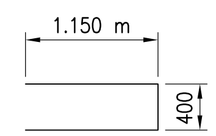

POS. 9
LG. = 2.700 m

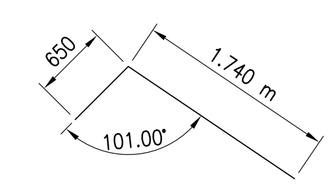

POS. 8
LG. = 2.390 m

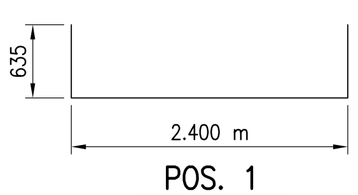

POS. 1
LG. = 3.670 m

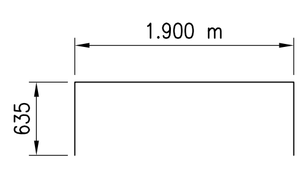

POS. 2
LG. = 3.170 m

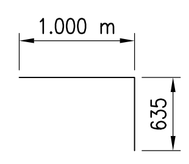

POS. 3
LG. = 1.635 m

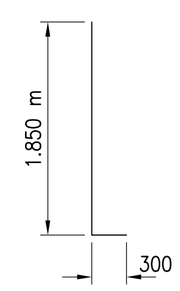

POS. 4
LG. = 2.150 m

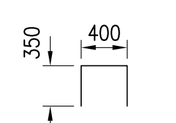

POS. 5a
LG. = 1.100 m

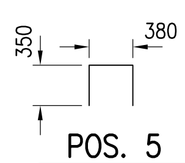

POS. 5
LG. = 1.080 m

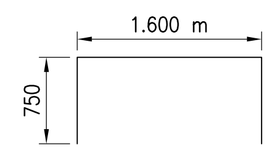

POS. 6
LG. = 3.100 m

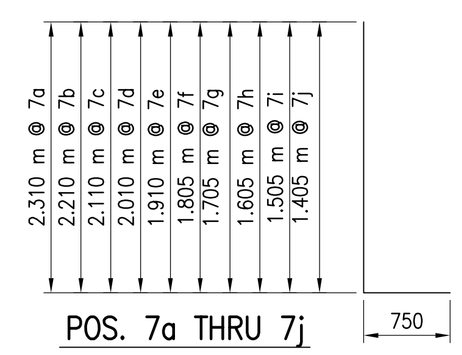

POS. 7a THRU 7j

7a – LG. = 3.060 m
7b – LG. = 2.960 m
7c – LG. = 2.860 m
7d – LG. = 2.760 m
7e – LG. = 2.660 m
7f – LG. = 2.555 m
7g – LG. = 2.455 m
7h – LG. = 2.355 m
7i – LG. = 2.255 m
7j – LG. = 2.155 m

GRAPHIC SCALE:
0 0.25m 0.5m 1m
SCALE: 1:20 (METRIC)

SEAL:

REV	DESCRIPTIONS	DATE	APPD.
	REVISION		

INTERNATIONAL BROADCASTING BUREAU
ENGINEERING & TECHNICAL OPERATIONS
WASHINGTON, D.C. 20547

Bader Al Mulla & Bros. Co. W.L.L.
Engineering Group

		DATE
DRAWN	HAK	23/05/04
CHK. BY.	JPB	DATE
ENGR.	JPB	DATE
APPROVALS		
PROJ. MANAGER	TC	

SHORTWAVE EXPANSION PROJECT
FOUNDATION TYPE D

KUWAIT

IQC No.	XX-XX-XX	DWG. No.	BMB-AS-ST-05
TASK No.	X		ST5
PROJ. No.	03NC080	SCALE: AS SHOWN	SHEET 1 OF SHT
CAD DESIGN FILE NAME: FILENAME			

80 Gabel Drive, Wayne, N.J. 07470 TEL : (973) 785-4646 FAX : (973) 785-0706 www.hansonengineers.com
HANSON
THALES
675 North Washington St., Alexandria, VA. 22314 TEL : (703) 838-5244 FAX : (703) 838-5264 www.thales-bcs.com