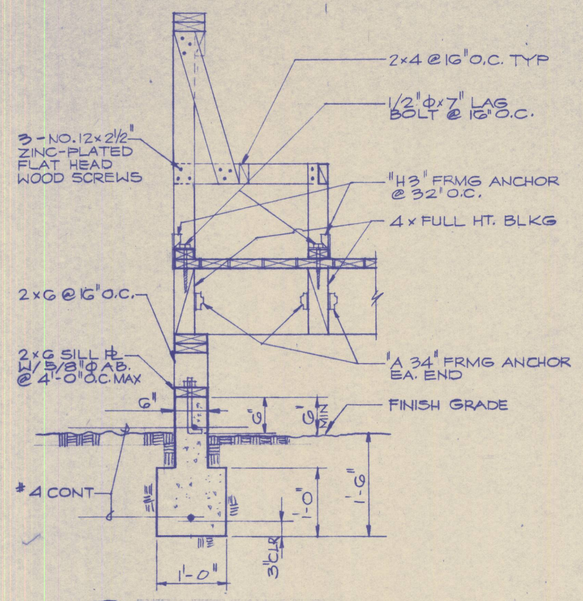

A DECK SECTION (5-4/5-4)
SCALE: 1" = 1'-0"

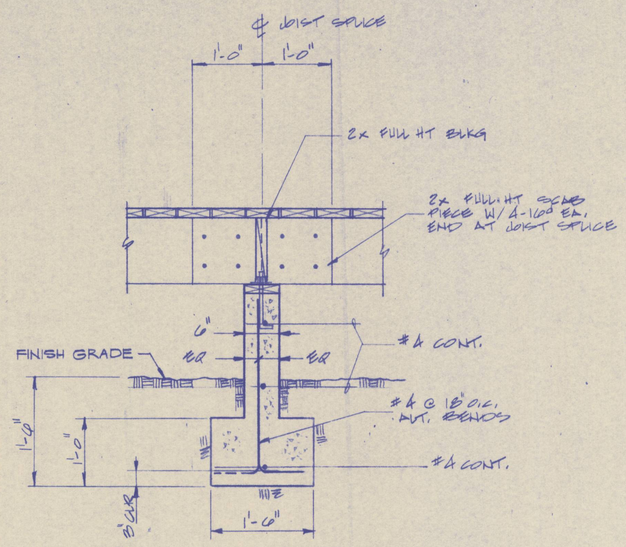

B DECK SECTION (5-4/5-4)
SCALE: 1" = 1'-0"

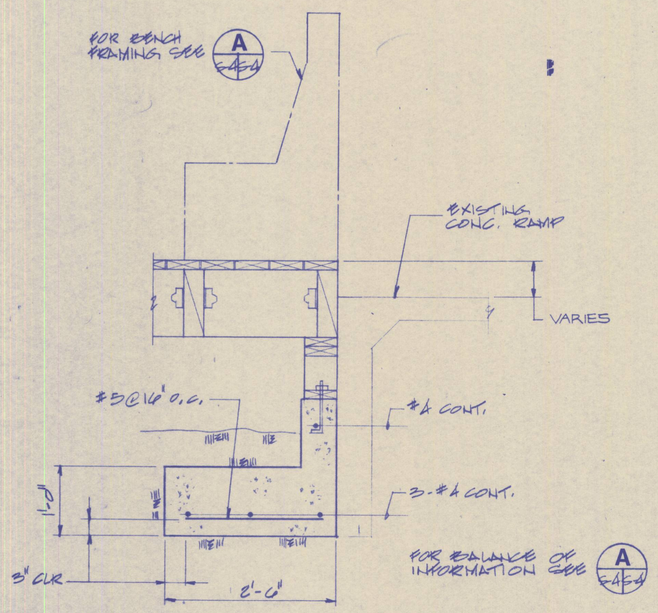

C DECK SECTION (5-4/5-4)
SCALE: 1" = 1'-0"

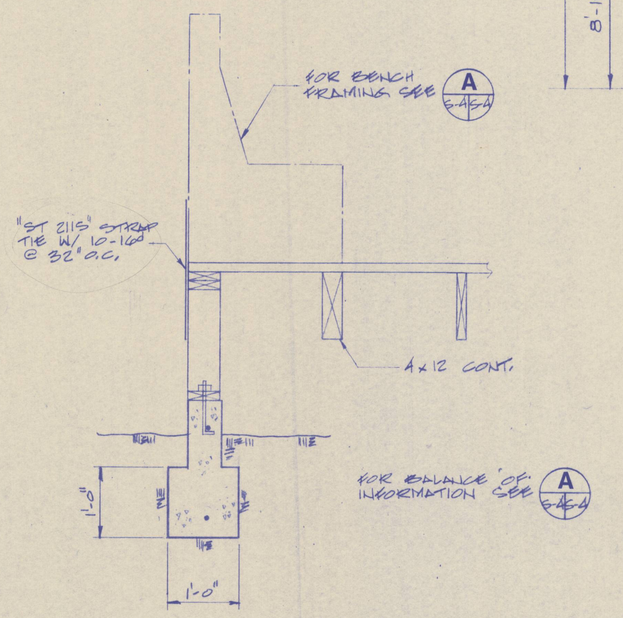

D DECK SECTION (5-4/5-4)
SCALE: 1" = 1'-0"

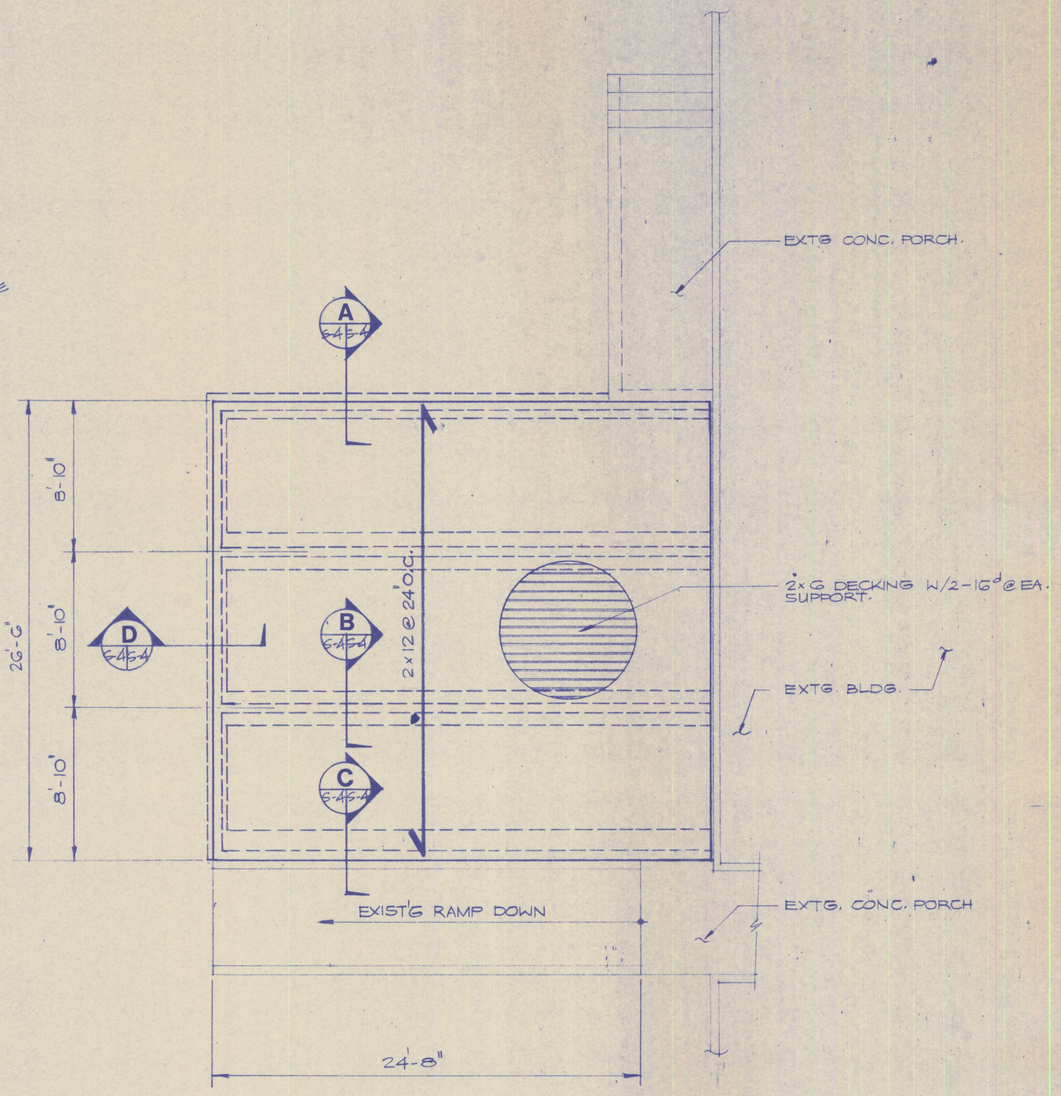

1 WOOD DECK PLAN (A-1/5-4)
SCALE: 1/4" = 1'-0"

north

NOTES:

1. REINFORCING BARBENDS PER 2 (5-4/5-10)
2. REINFORCING AT CONCRETE INTERSECTIONS PER 4 (5-4/5-10)

REVISION NO.	DATE	DESCRIPTION	AGENCY	BY

Pan Am World Services, Inc.

UNITED STATES AIR FORCE
HQ 6592d SUPPORT GROUP (AFSC)
LOS ANGELES AIR FORCE BASE

DESIGNED BY: MW
DRAWN BY: MW, TD.
CHECKED BY:
SUBMITTED BY: DATE

RENOVATE BUILDING 403 COMMUNITY CENTER
LAO 89-1028
FORT MacARTHUR, CALIFORNIA
LOS ANGELES AIR FORCE BASE

DECK FRMG PLAN & SECTIONS

APPROVED: USING AGENCY / BASE CIVIL ENGINEER — DATE

SPECIFICATION NO. 6592/DE 9010289
DATE 10-16-89 | SCALE AS NOTED
DRAWING NUMBER 00403-5010289 (ATCH. 3)
SHEET 29 OF 48

GRAPHIC SCALE
1/4" : 1'-0" — 4' 2' 0' 4' 8'
1" : 1'-0" — 12" 9" 6" 3" 0 1' 2'

COORDINATED:

	DATE
MANAGER ENGINEER	
SECURITY	
SAFETY DIVISION	
CHIEF FIRE PROTECTION	
COMMUNICATIONS ENGINEER	
BIOENVIRONMENTAL ENGINEER	