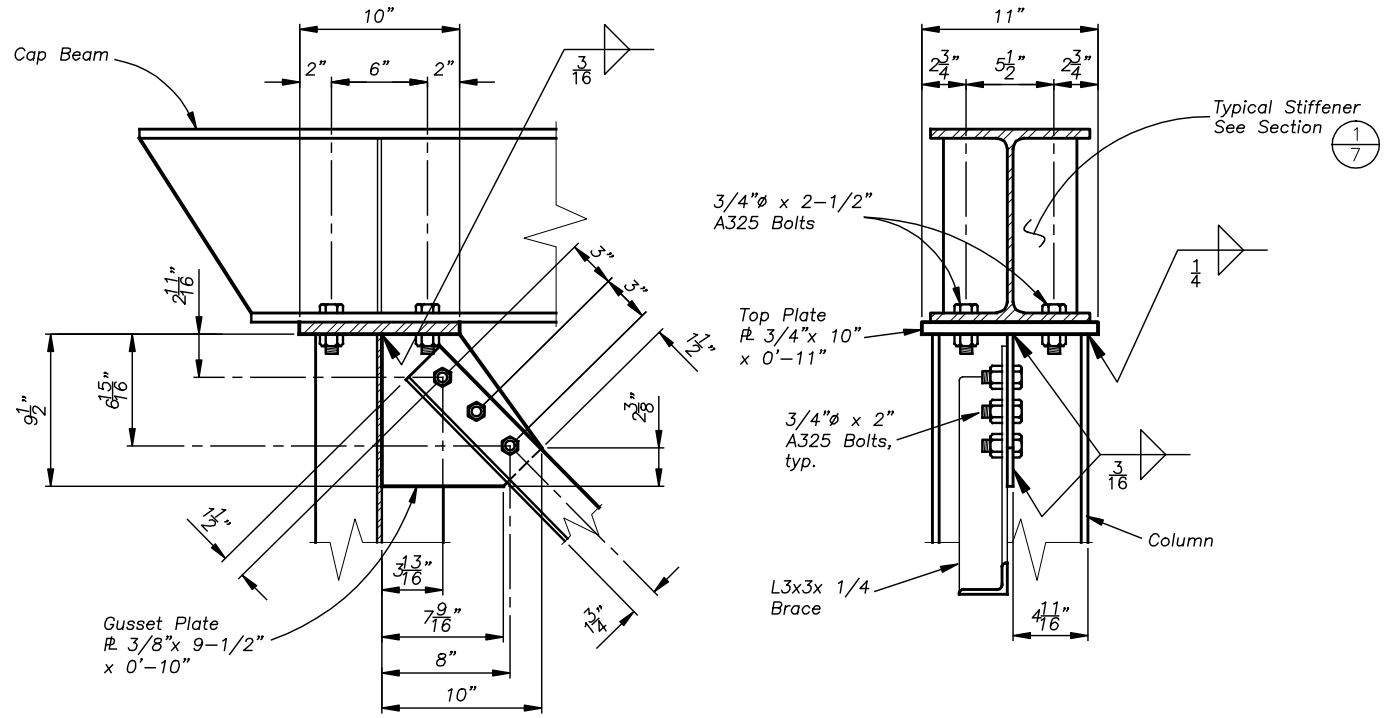

A/8 **DETAIL**

Scale: 1" = 1'-0"

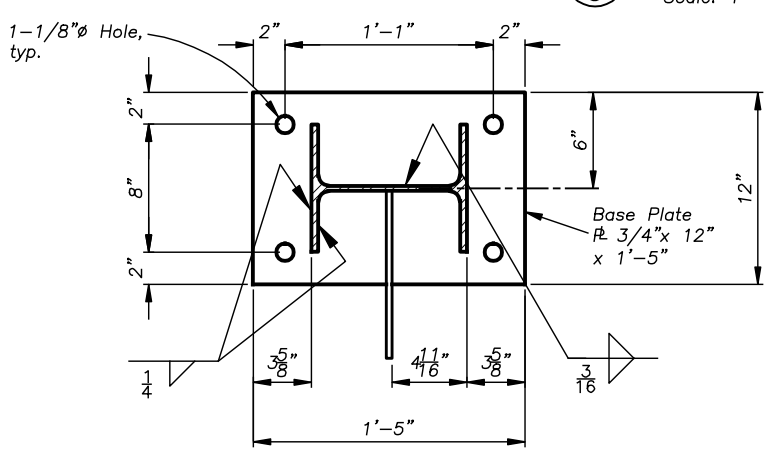

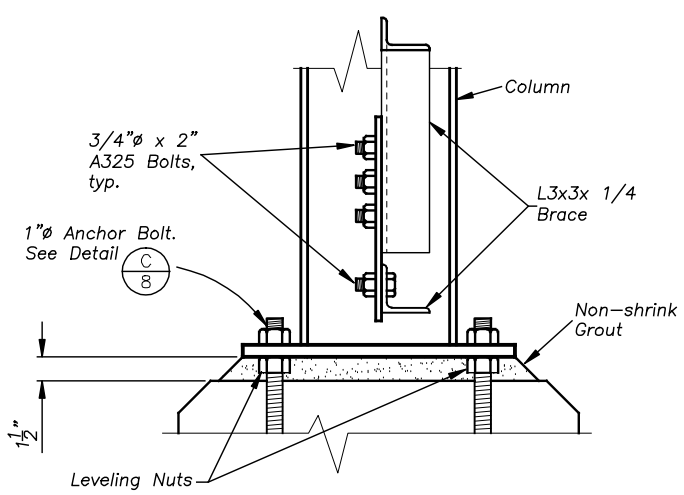

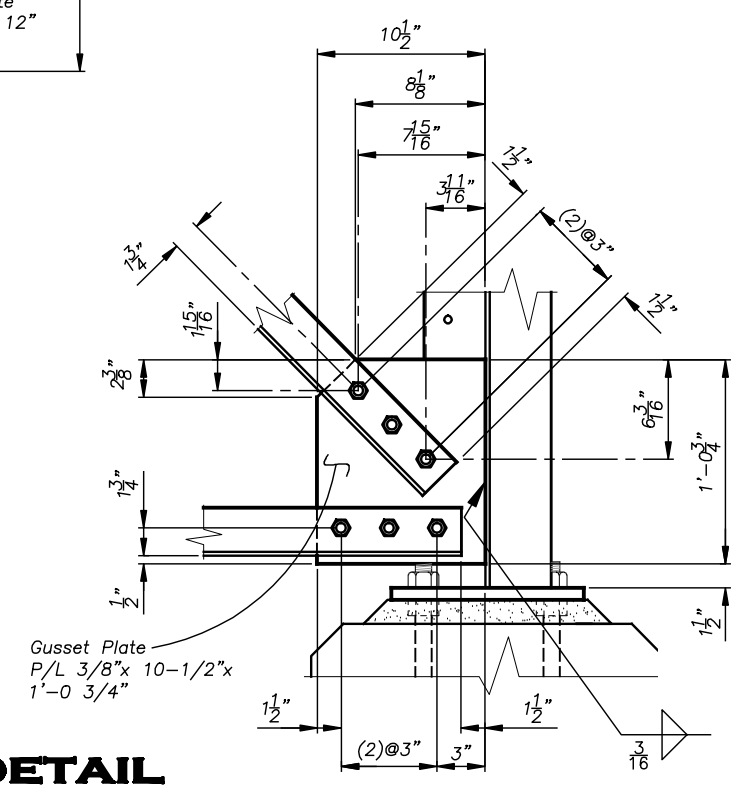

B/8 **DETAIL**

Scale: 1" = 1'-0"

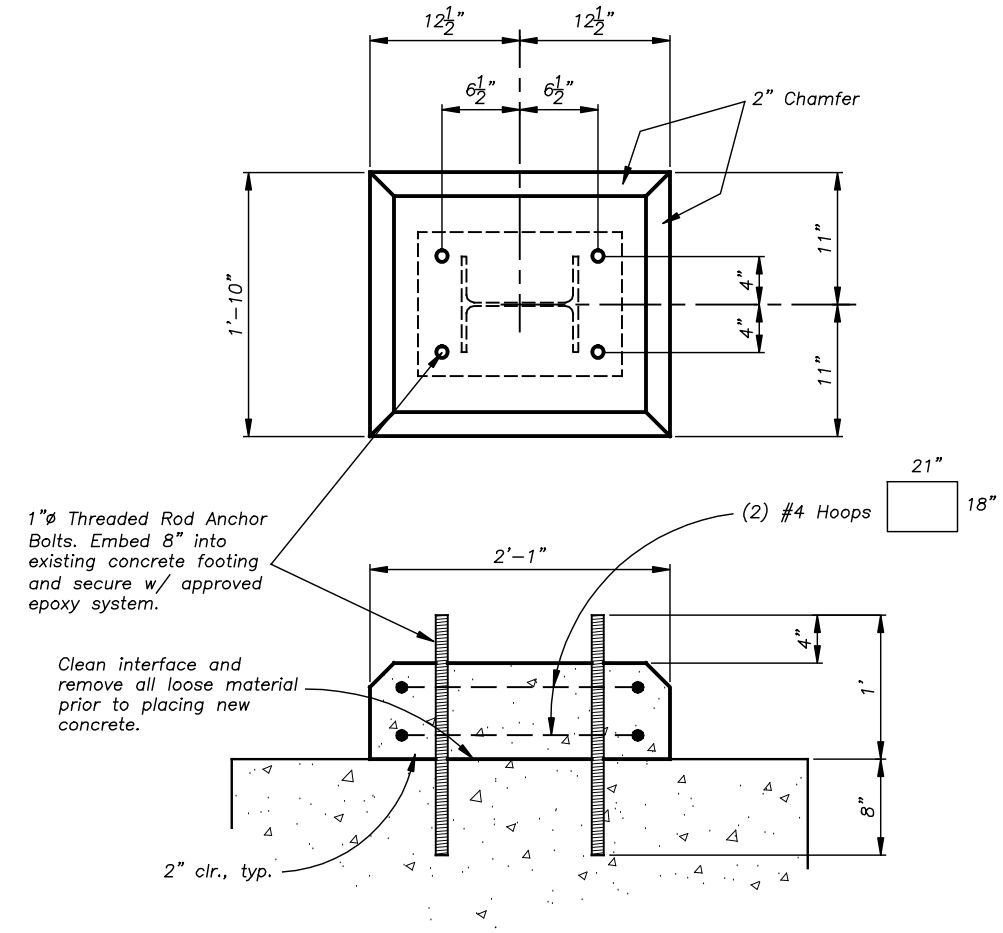

C/8 **DETAIL**

Scale: 3/4" = 1'-0"

BY	DATE	REVISION DESCRIPTION

DESIGN	CT	PROJ. NO.	5282
DRAWN	CT	DATE	MAY 07
CHECKED	MJ	SURVEYED	DJ&A

DJ&A, P.C.
CONSULTING ENGINEERS & LAND SURVEYORS

USFS - CLEARWATER N.F.
COLT CREEK CABIN TRAIL
BRIDGE REPLACEMENT

PIER NO. 1 DETAILS

SHEET 8 OF 14