STATE	PROJECT	SHEET NUMBER
ID	PFH 80-1(1)	G.2

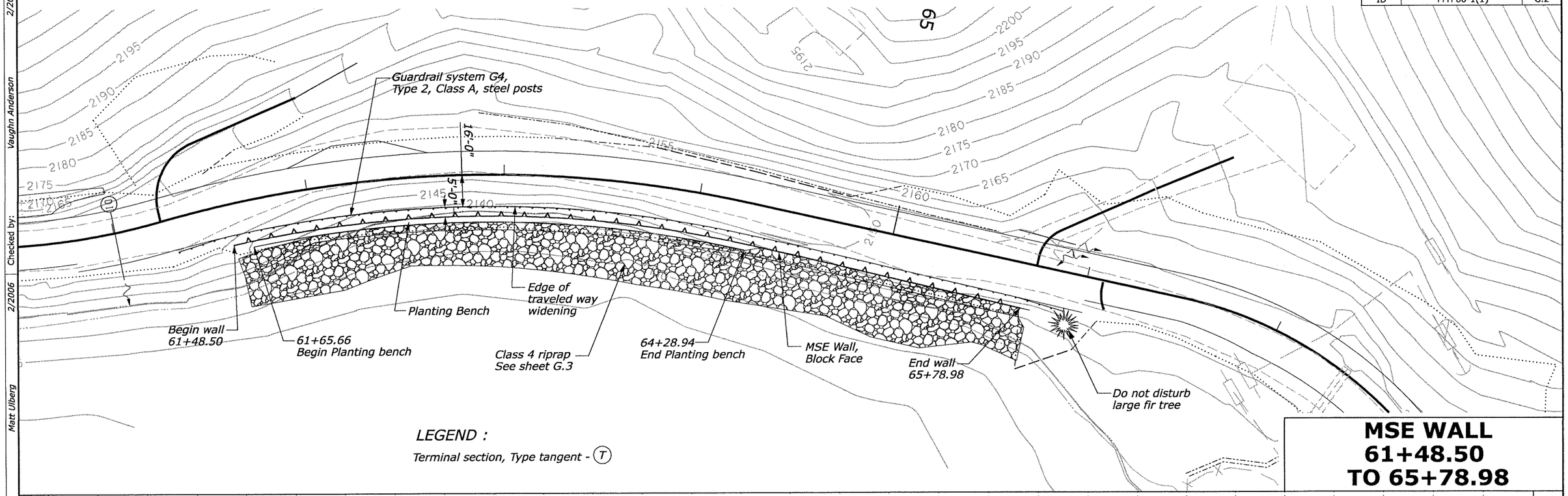

LEGEND :

Terminal section, Type tangent - (T)

MSE WALL 61+48.50 TO 65+78.98

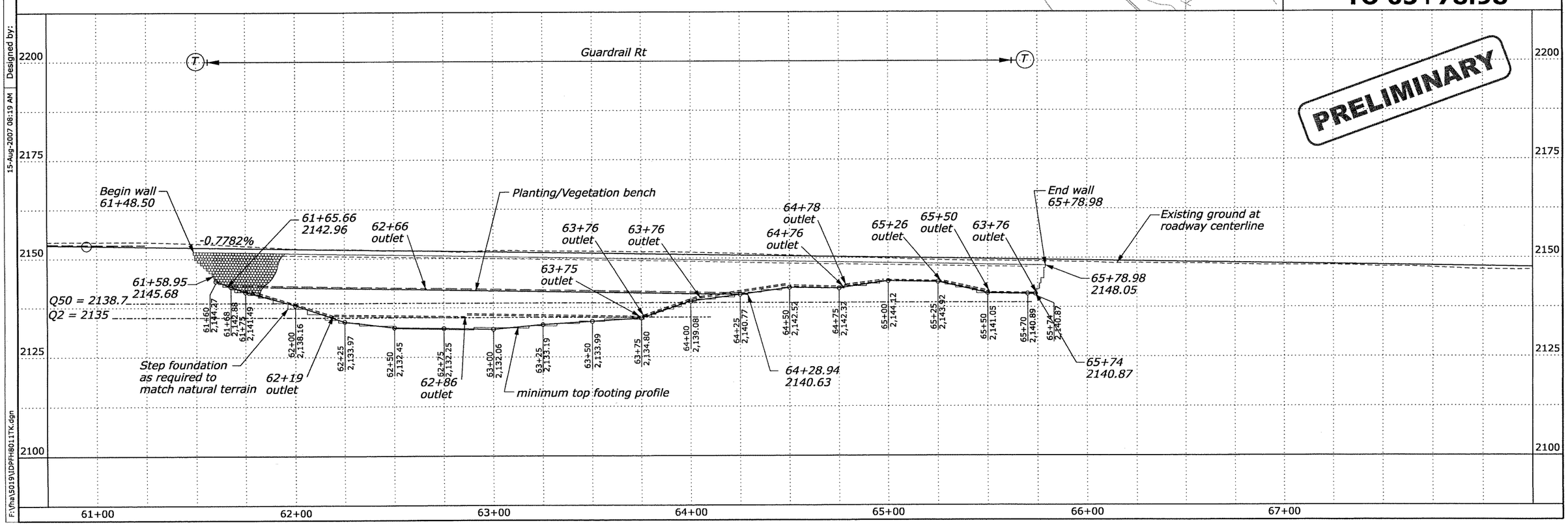

Designed by: Matt Ulberg 2/2006 | Checked by: Vaughn Anderson 2/2006 | 15-Aug-2007 08:19 AM | F:\fha\5019\DPFH8011TK.dgn

STATE	PROJECT	SHEET NUMBER
ID	PFH 80-1(1)	G.3

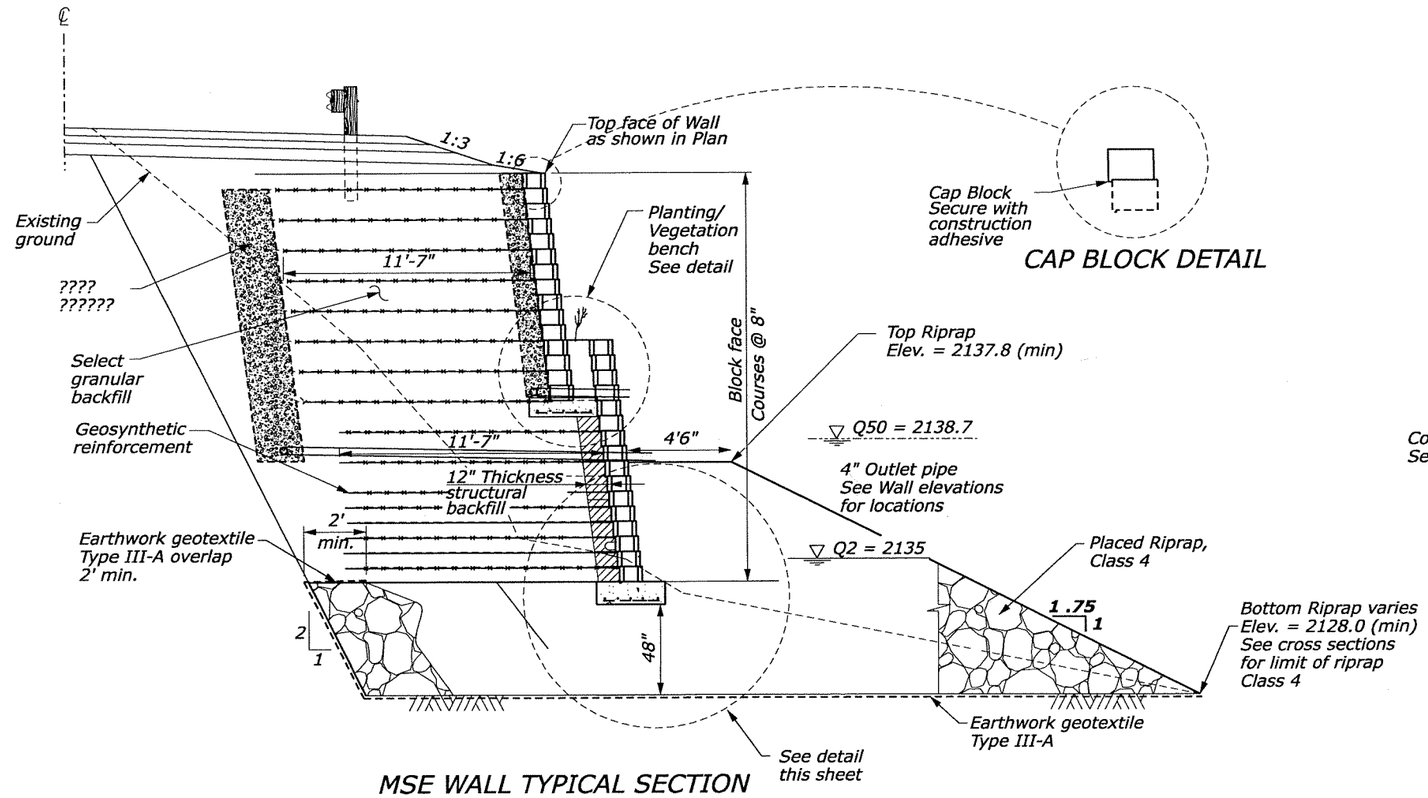

MSE WALL TYPICAL SECTION

CAP BLOCK DETAIL

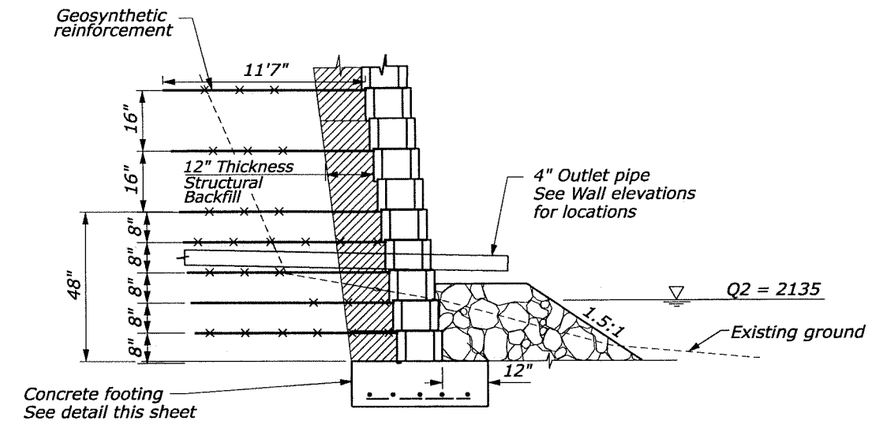

MSE WALL TYPICAL SECTION DETAIL

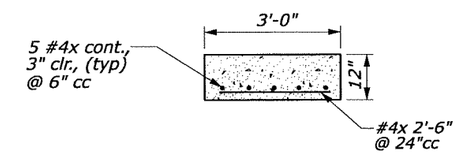

MID-WALL CONCRETE FOOTING DETAIL

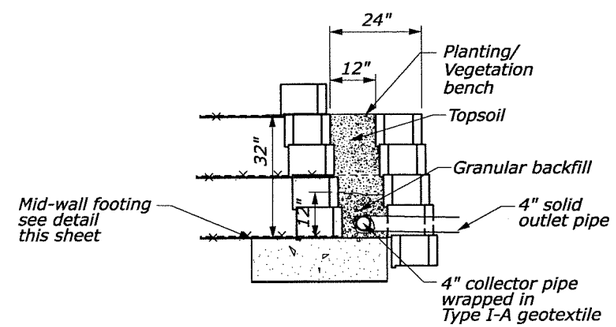

PLANTING/VEGETATION BENCH DETAIL

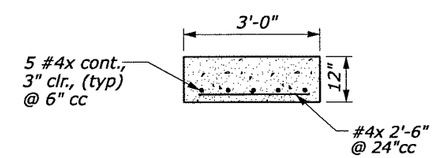

CONCRETE FOOTING DETAIL

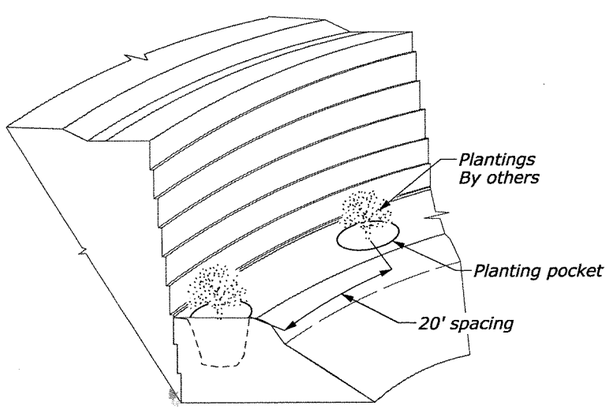

MSE WALL PLANTING POCKET DETAIL

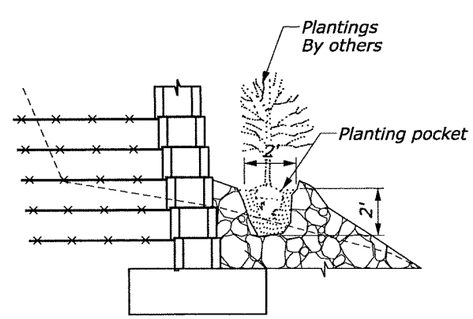

MSE WALL PLANTING POCKET DETAIL

PRELIMINARY

NOTE:

1. Fill voids in retaining wall units with structural backfill Incidental to Item 25501-3000
2. Shape of Placed Riprap, Class 4 at base of wall varies with location. See Cross sections.

MSE WALL DETAILS
1 OF 2

F:\fha\5019\IDPFH8011TJ.dgn 15-Aug-2007 08:21 AM Designed by: Matt Ulberg 2/2006 Checked by: Vaughn Anderson 2/2006

STATE	PROJECT	SHEET NUMBER
ID	PFH 80-1(1)	G.4

PRELIMINARY

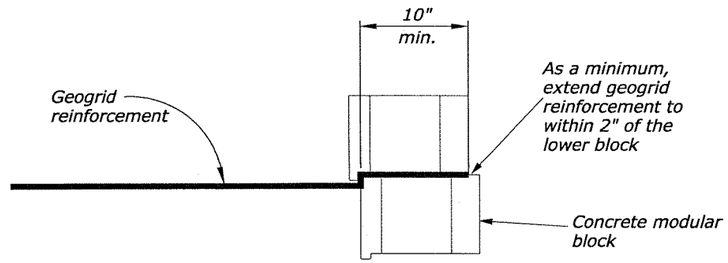

REINFORCEMENT CONNECTION DETAIL

Not to scale

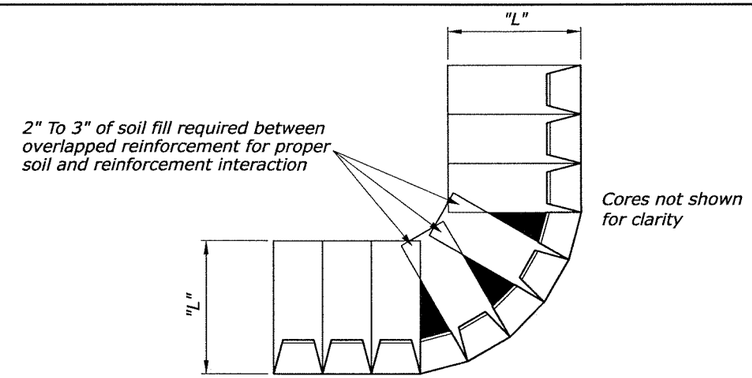

Step 1 - place reinforcement so little or no overlap occurs in the radius area. If overlap occurs, place 2 to 3 inches of sand between the reinforcement layers.

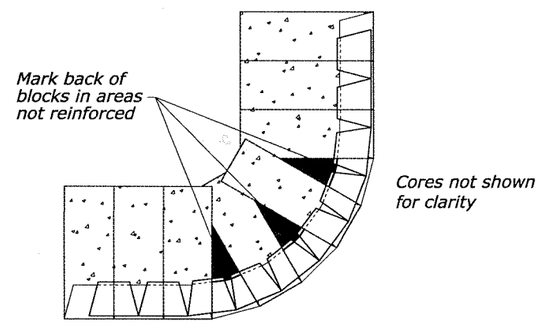

Step 2 - lay the next course of block. Make a mark on the back of the blocks in the areas that are not reinforced. Backfill and compact that course.

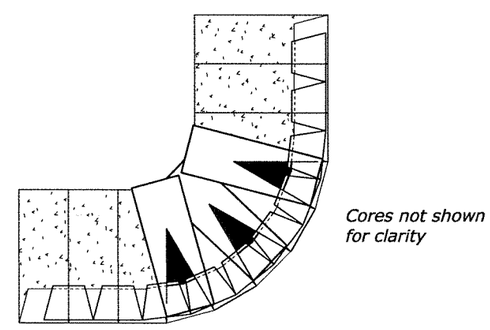

Step 3 - place reinforcement in the areas where the marks show gaps in the lower reinforcement pattern. Continue normal wall construction, repeating these steps as needed.

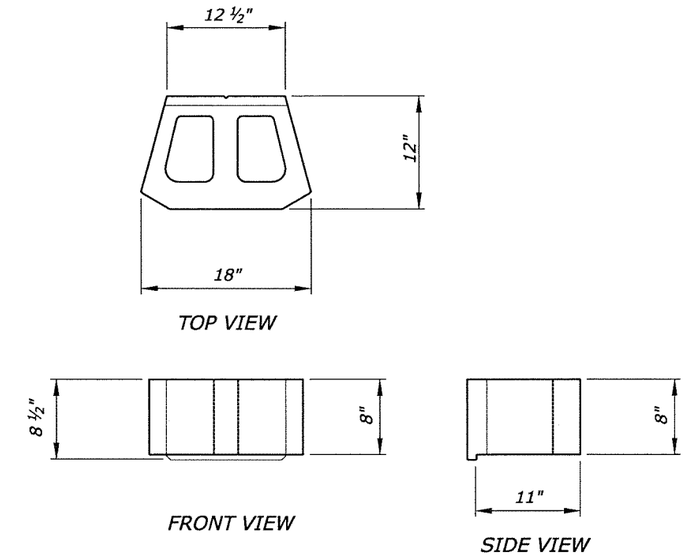

TYPICAL MODULAR BLOCK

Not to scale

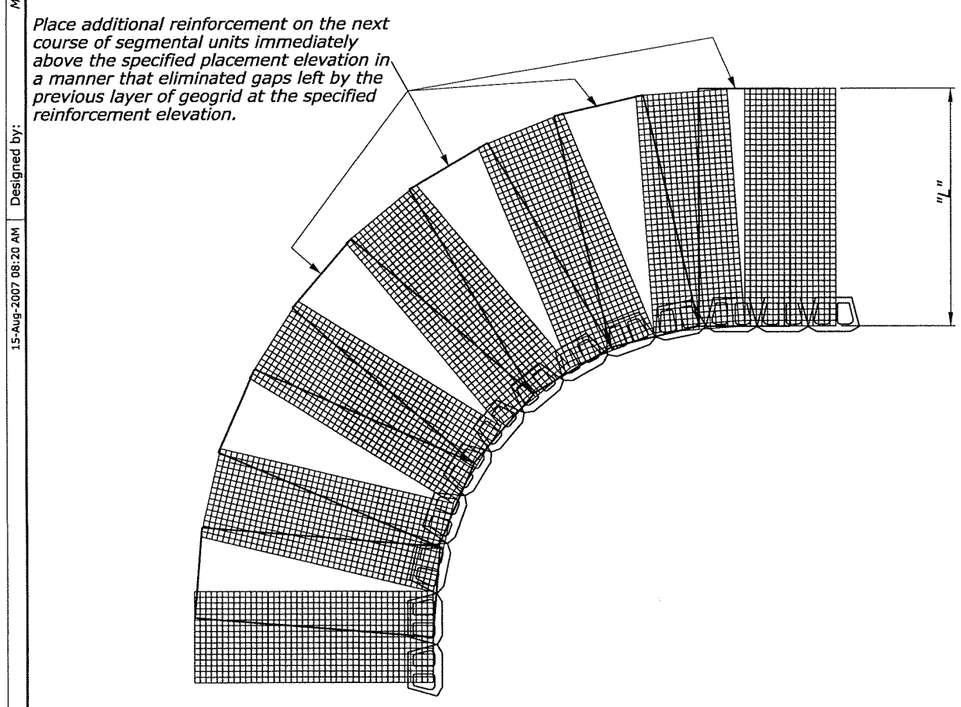

TYPICAL REINFORCEMENT INSTALLATION FOR INSIDE CURVES

Not to scale

TYPICAL REINFORCEMENT INSTALLATION FOR OUTSIDE CURVES

Not to scale

NOTE:

1. Ensure that the geogrid reinforcement is in tension and free from wrinkles prior to placement of the bacfill soils. Pull the reinforcement hand-taut and secure in place with staples, stakes, or by hand-tensioning until the geogrid reinforcement is covered by 6 inches of loose fill.
2. See section 255 for modular block color.
3. Steps to provide general guidance. Install per manufacturer's recommendations. Manufacturer's recommendations supercede construction steps shown on this sheet.

MSE WALL DETAILS
2 OF 2

F:\fha\5019\IDPFH8011TJ.dgn 15-Aug-2007 08:20 AM Designed by: Matt Ulberg 2/2006 Checked by: Vaughn Anderson 2/2006

STATE	PROJECT	SHEET NUMBER
ID	PFH 80-1(1)	G.5

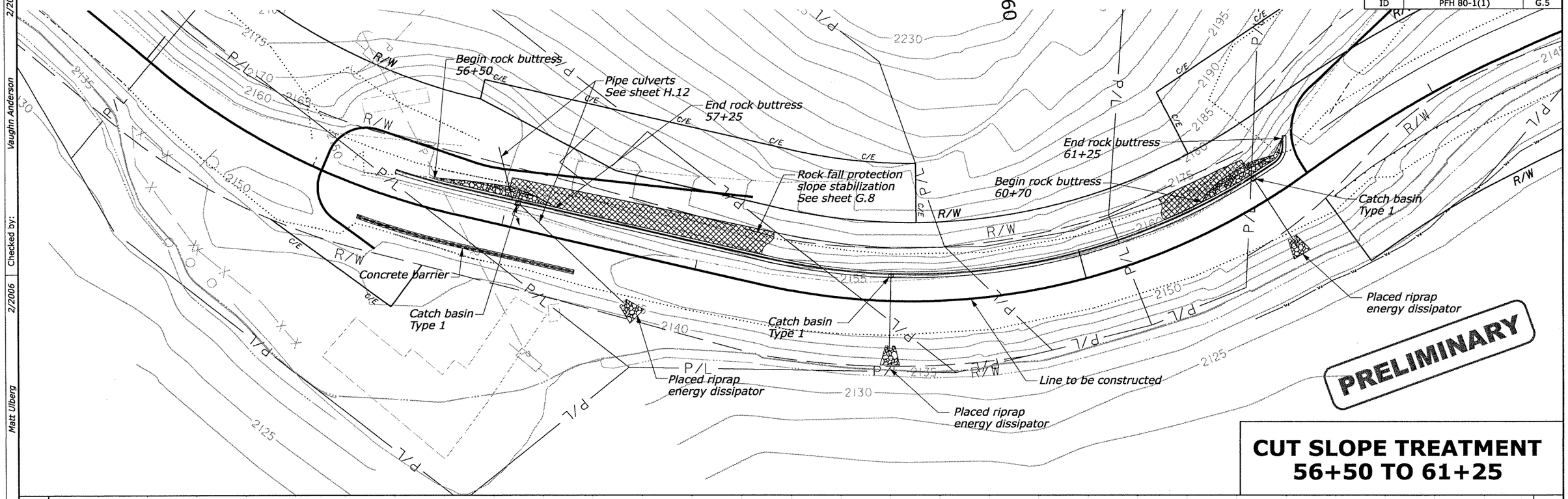

CUT SLOPE TREATMENT 56+50 TO 61+25

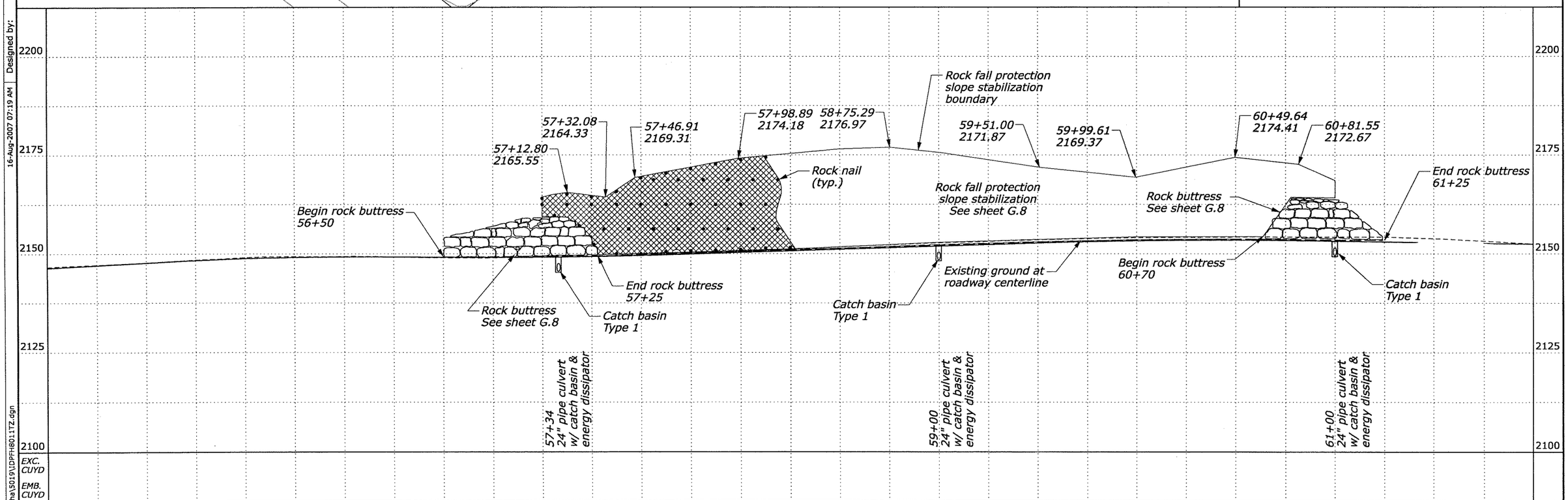

Designed by: Vaughn Anderson 2/2006
Checked by: Matt Ulberg 2/2006
16-Aug-2007 07:19 AM
F:\fha\5019\DPFH801.1TZ.dgn

STATE	PROJECT	SHEET NUMBER
ID	PFH 80-1(1)	G.6

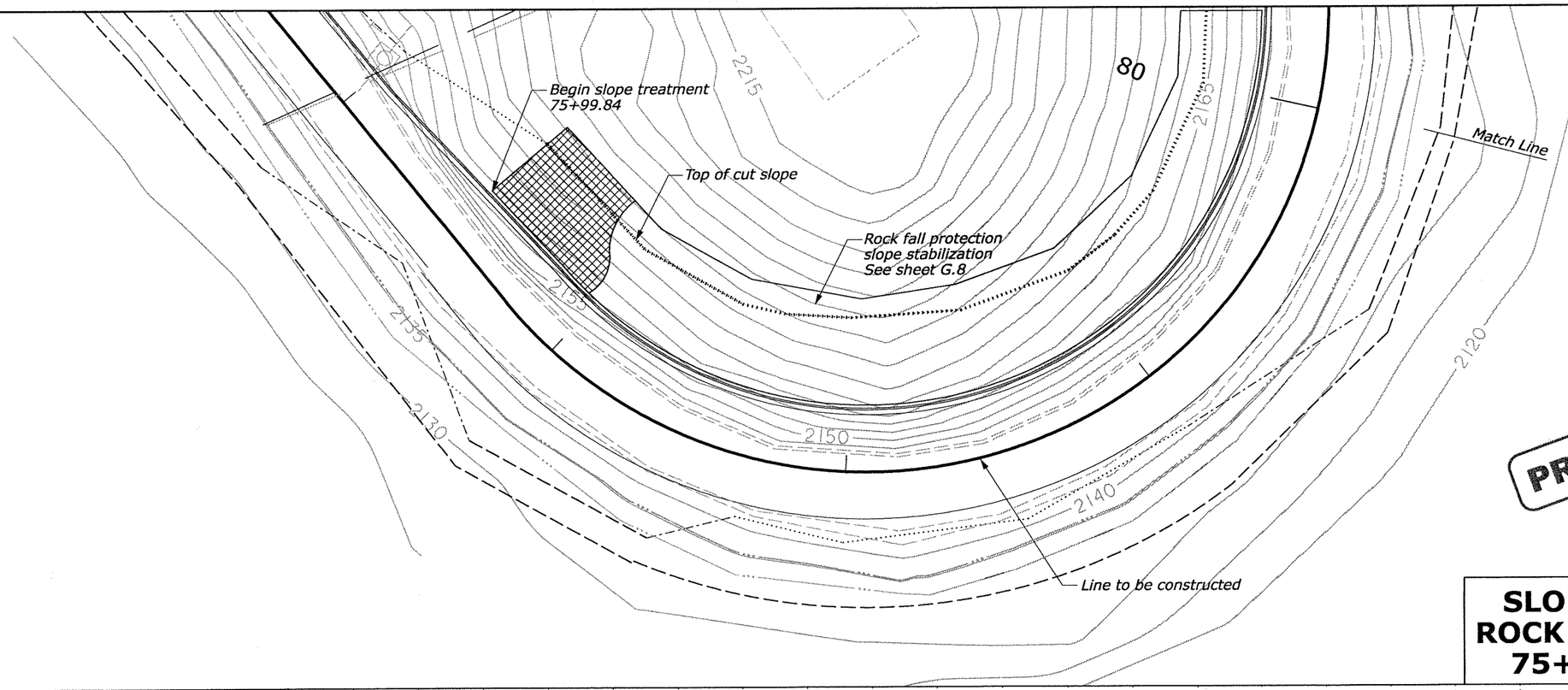

PRELIMINARY

SLOPE TREATMENT & ROCK FALL PROTECTION 75+99.84 TO 80+00

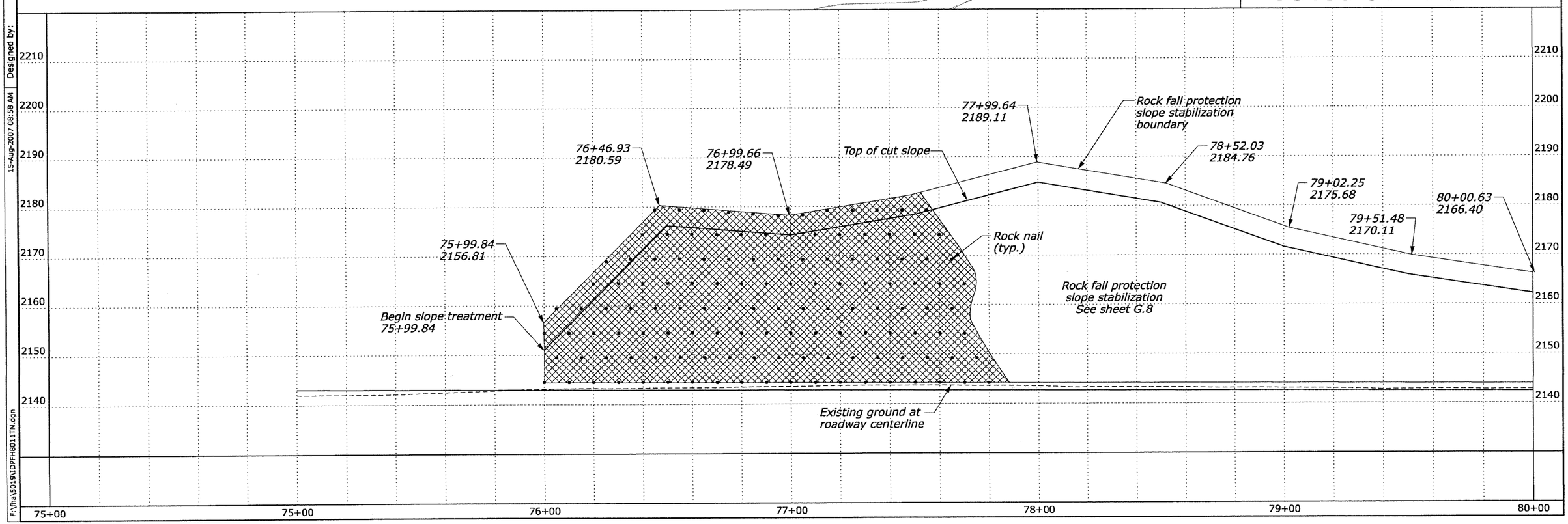

Designed by: Matt Ulberg 2/2006
Checked by: Vaughn Anderson 2/2006
15-Aug-2007 08:58 AM
F:\fha\5019\DPFH8011TN.dgn

STATE	PROJECT	SHEET NUMBER
ID	PFH 80-1(1)	G.7

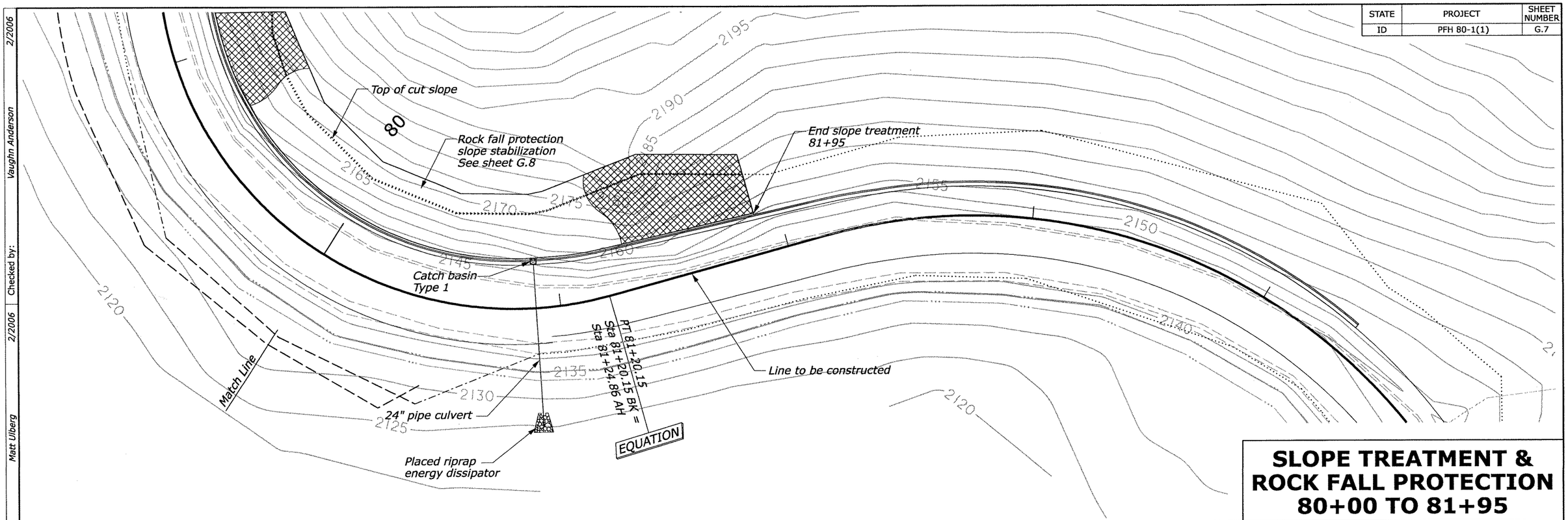

SLOPE TREATMENT & ROCK FALL PROTECTION 80+00 TO 81+95

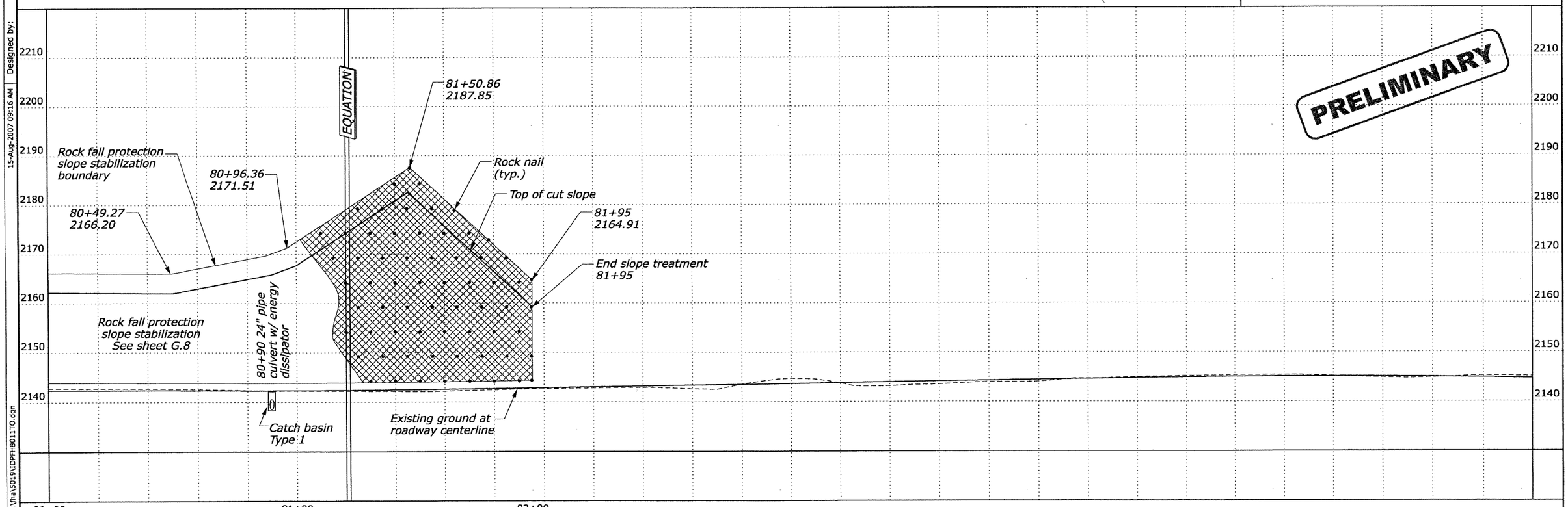

PRELIMINARY

Designed by: Matt Ulberg 2/2006 | Checked by: Vaughn Anderson 2/2006

15-Aug-2007 09:16 AM

F:\fhwa\5019\DPFH8011TO.dgn

STATE	PROJECT	SHEET NUMBER
ID	PFH 80-1(1)	G.8

PRELIMINARY

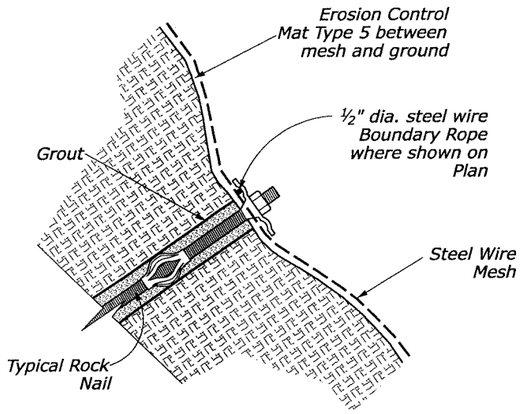

DETAIL A

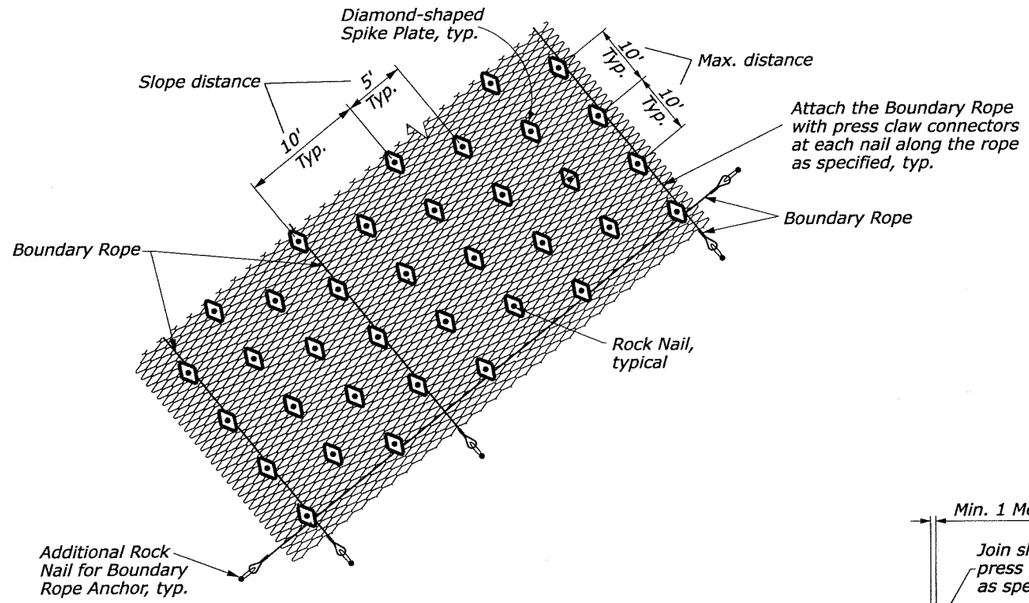

MESH DETAIL

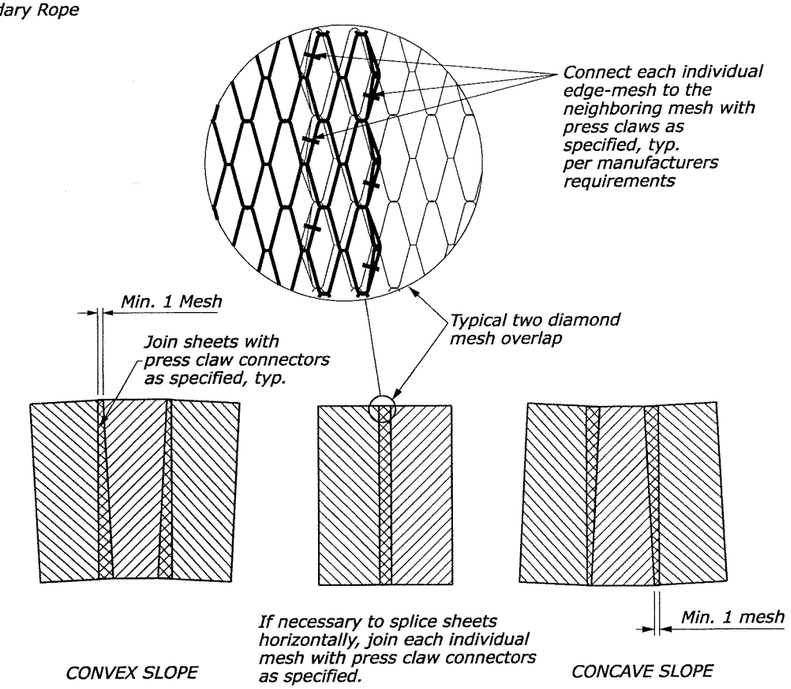

MESH SHEET SPLICING DETAILS

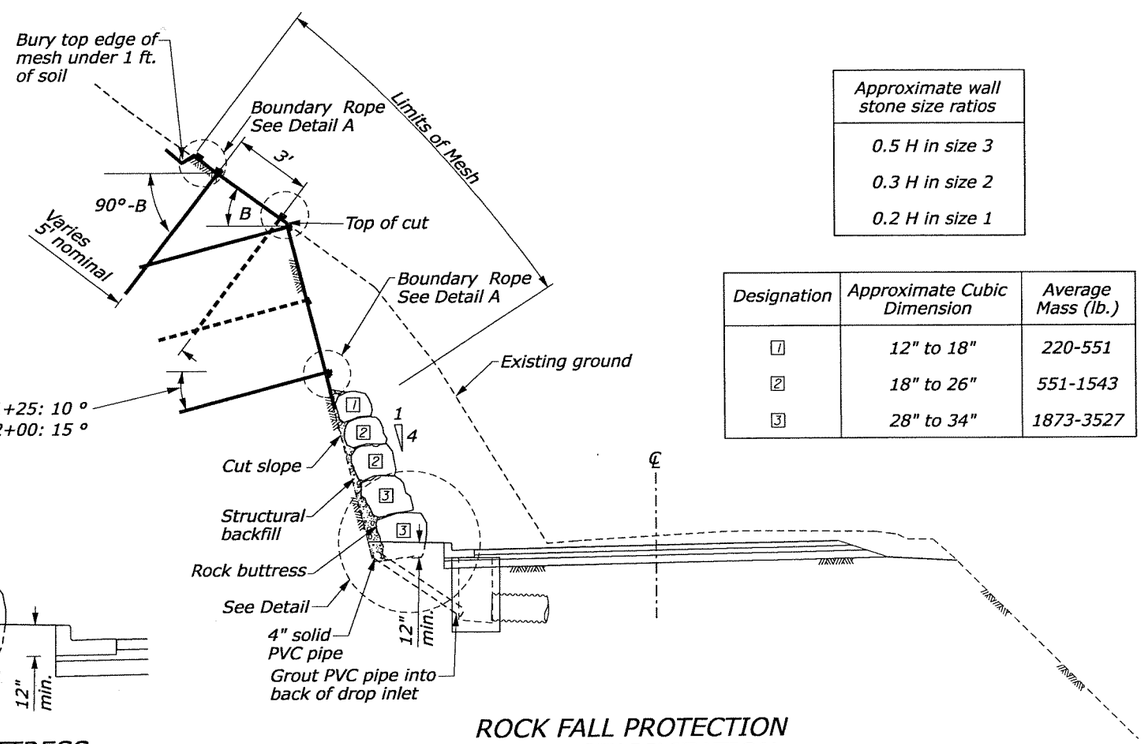

ROCK FALL PROTECTION SLOPE STABILIZATION TYPICAL SECTION

Approximate wall stone size ratios
0.5 H in size 3
0.3 H in size 2
0.2 H in size 1

Designation	Approximate Cubic Dimension	Average Mass (lb.)
1	12" to 18"	220-551
2	18" to 26"	551-1543
3	28" to 34"	1873-3527

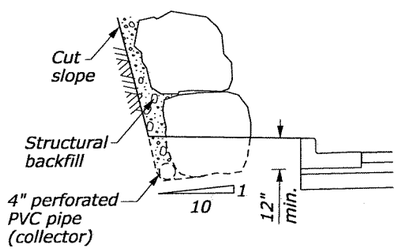

ROCK BUTTRESS DETAIL

NOTE:

1. Place erosion control mat, type 5 between mesh and slope soil. Apply turf establishment to ground surface after nails have been installed and before slope stabilization system has been installed.
2. Place larger stones (size 3) with longest axis perpendicular to wall. Rock size to conform with Section 705.03.
3. Offset stones to avoid parallel joints. Use smaller stones as needed to maintain spacing and eliminate gaps over 6". Cutting or dressing stones will not be required.

ROCK FALL PROTECTION SLOPE STABILIZATION TYPICAL SECTION & DETAILS

2/2006 | Vaughn Anderson | Checked by: | 2/2006 | Matt Ulberg | 15-Aug-2007 09:30 AM | Designed by: | F:\Ma\5019\LDPFH8011RY.dgn

STATE	PROJECT	SHEET NUMBER
ID	PFH 80-1(1)	G.9

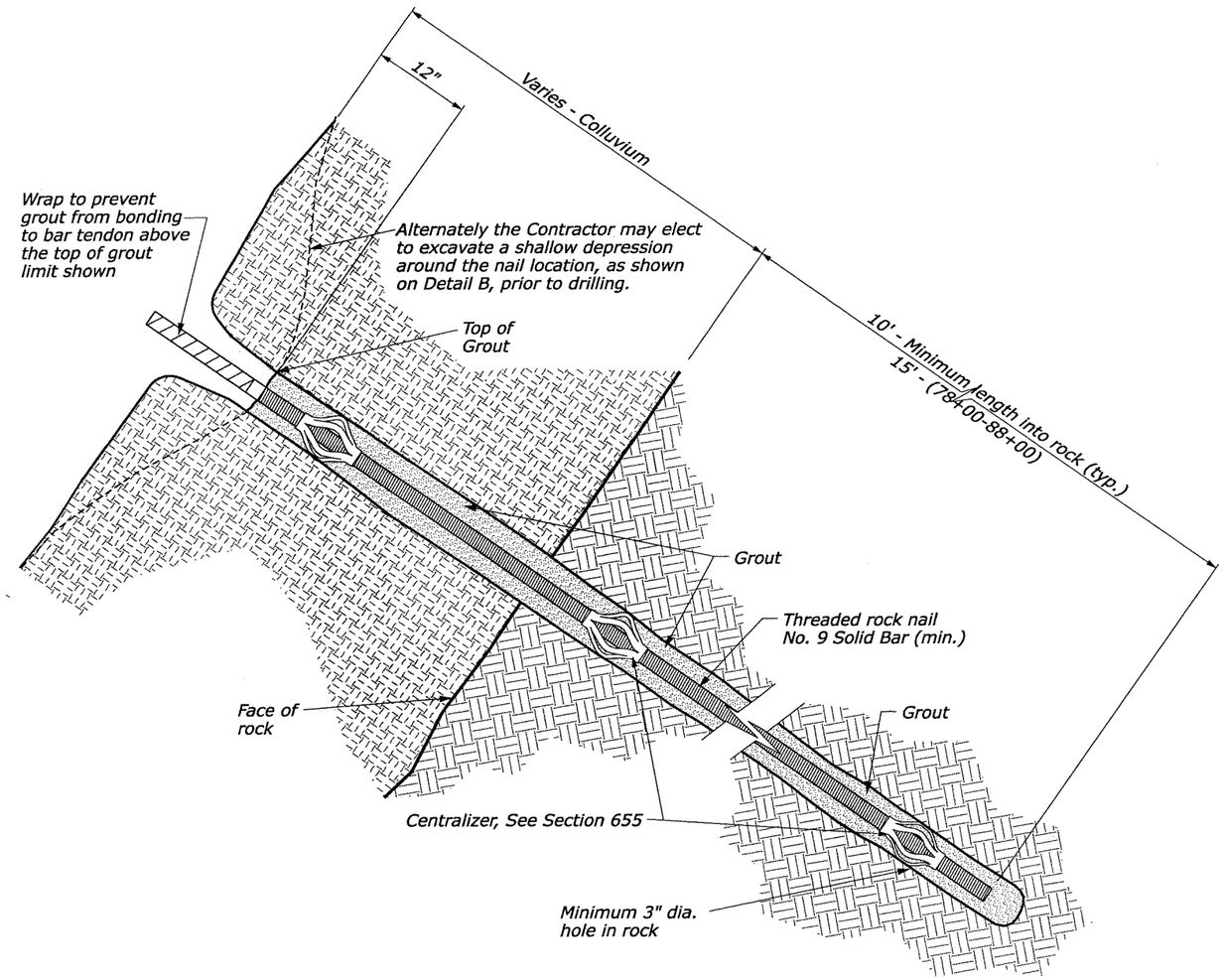

DETAIL A
TYPICAL ROCK NAIL INSTALLATION

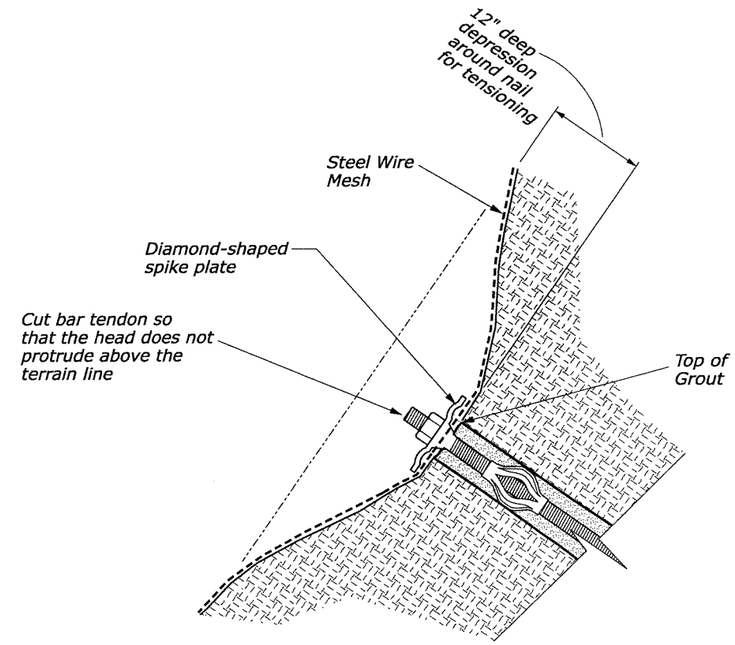

DETAIL B
ROCK NAIL AFTER MESH INSTALLATION

NOTE:

1. Use rock nail tendons manufactured from bar conforming to AASHTO M31 M, Grade 520 (ASTM A 615 M), or higher grade continous threaded with a minimum ultimate stress = 75,000 psi and galvanized in accordance with AASHTO M 232 (ASTM A-153)
2. If depression is excavated prior to drilling, the Contractor may elect to install the nail with the head below the terrain line instead of cutting the bar.
3. Use grout with a minimum 28 day compressive strength of 4000 psi.
4. Rock Nail Design Load = 35,000 lbs. (Lock-off + Passive).
5. Lock-off Load = 10,000 lbs. (pretensioned load).
6. The Contractor may develop a lock-off torque that corresponds to a 10,000 lbs. axial setting load. The lock-off load must be acceptable to the CO.

PRELIMINARY

ROCK FALL PROTECTION
SLOPE STABILIZATION
ROCK NAIL DETAILS

F:\fha\5019\IDPFH8011TW.dgn | 15-Aug-2007 09:31 AM | Designed by: Matt Ulberg | 2/2006 | Checked by: Vaughn Anderson | 2/2006

STATE	PROJECT	SHEET NUMBER
ID	PFH 80-1(1)	H.14

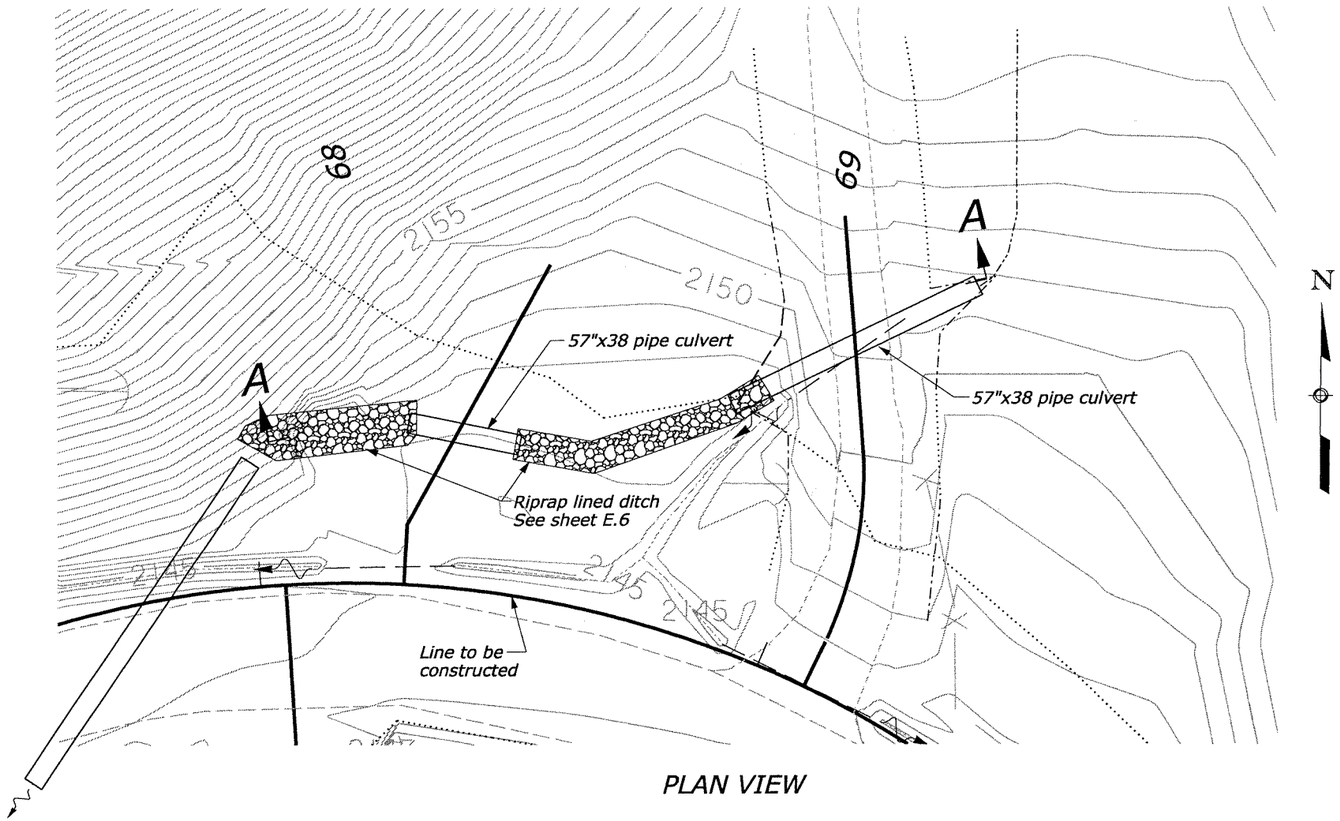

PLAN VIEW

PRELIMINARY

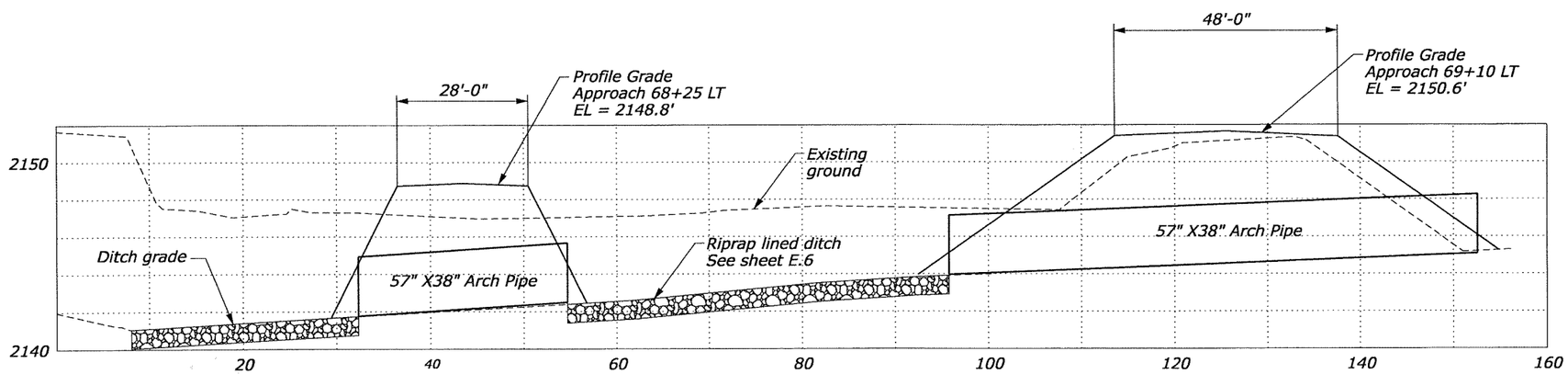

SECTION A-A

APPROACH
PIPE CULVERTS
68+28 LT. & 69+10 LT.

F:\fha\5019\IDPFH8011QOM.dgn | 15-Aug-2007 09:53 AM | Designed by: Matt Ulberg | 2/2006 | Checked by: Vaughn Anderson | 2/2006

STATE	PROJECT	SHEET NUMBER
ID	PFH 80-1(1)	H.15

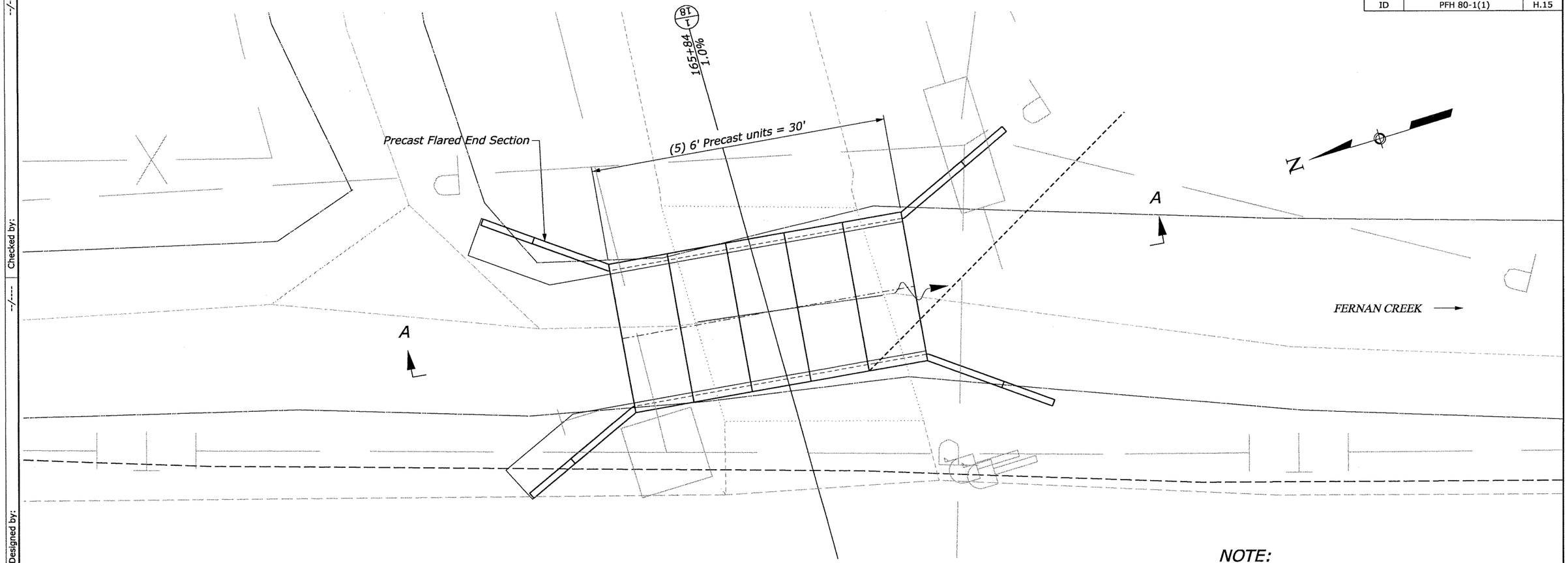

NOTE:

1. Conserve suitable material encountered in the excavation for use as streambed material.
2. Place conserved material in the culvert to match the existing streambed slope as closely as possible. If sufficient streambed material is not available, use material with a gradation comparable to the natural stream.
3. Place riprap on face of culvert inlet and outlet.

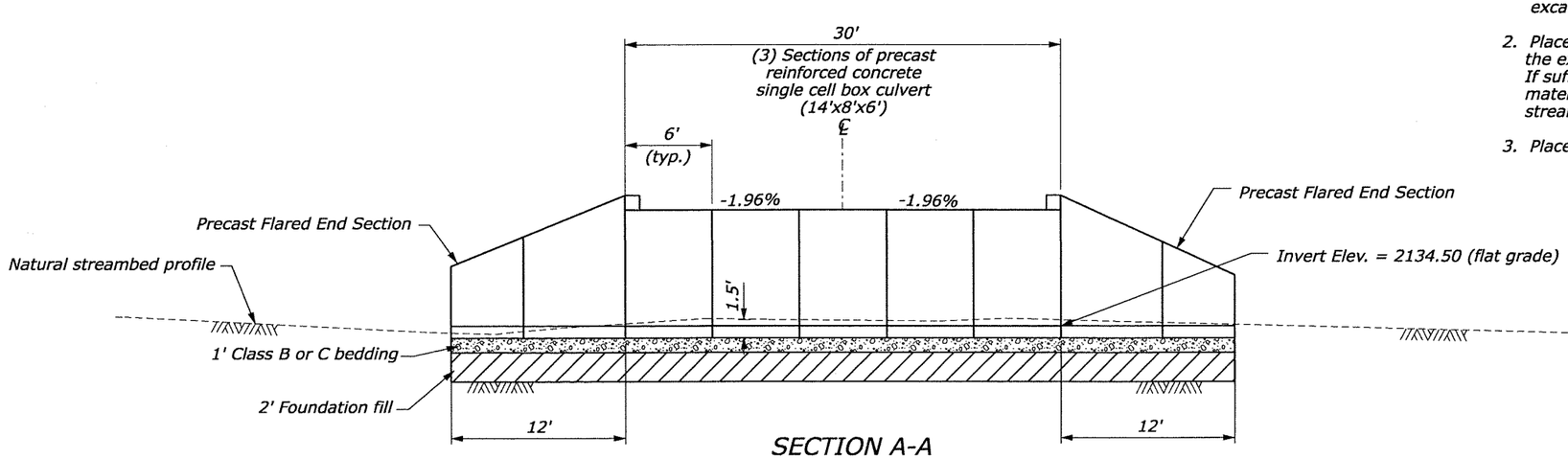

SECTION A-A

PRELIMINARY

APPROACH BOX CULVERT 165+84

Designed by: --/---
Checked by: --/---
15-Aug-2007 09:58 AM
F:\fha\5019\IDPFH8011UO.dgn

STATE	PROJECT	SHEET NUMBER
ID	PFH 80-1(1)	H.16

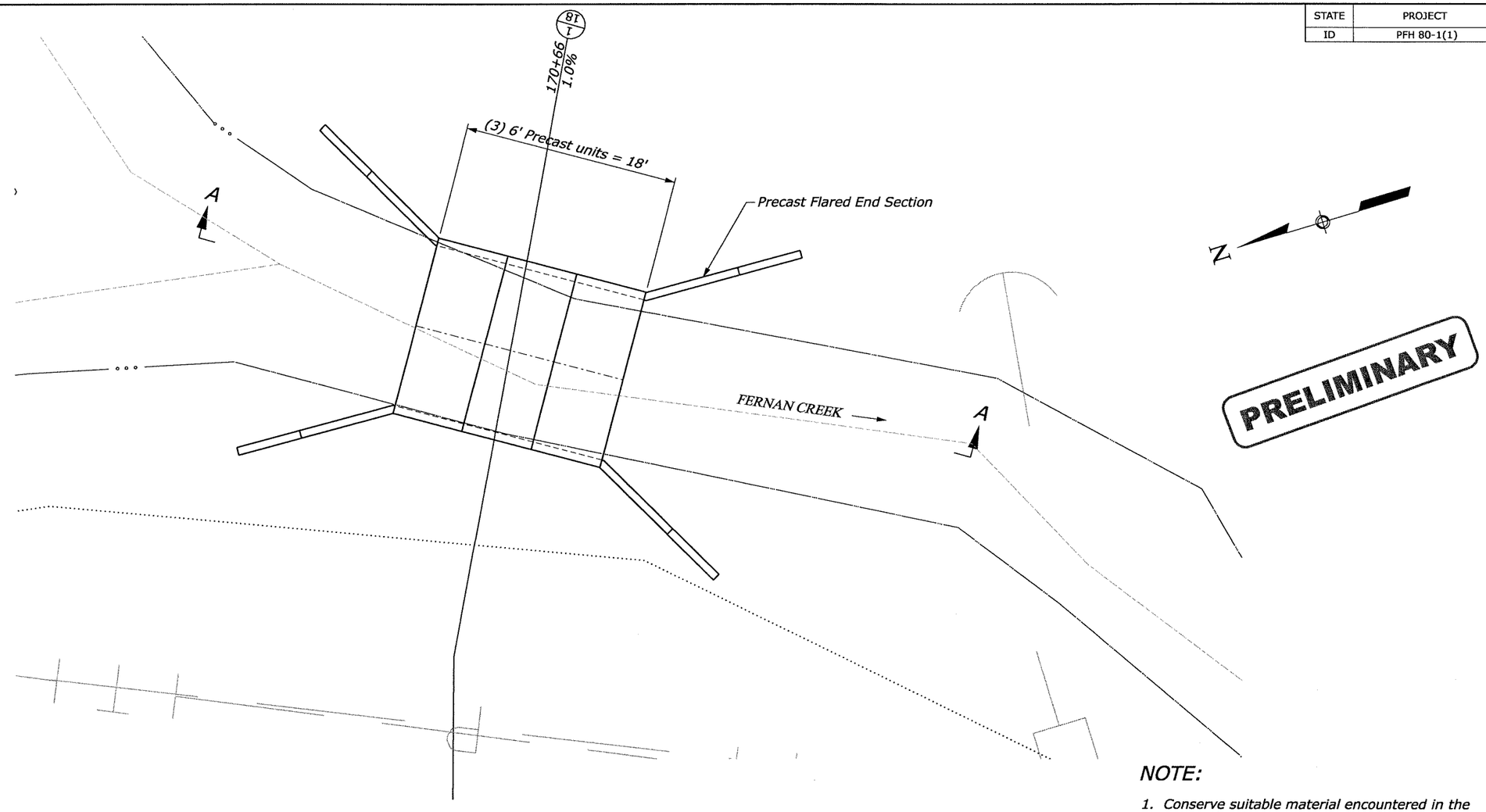

NOTE:

1. Conserve suitable material encountered in the excavation for use as streambed material.
2. Place conserved material in the culvert to match the existing streambed slope as closely as possible. If sufficient streambed material is not available, use material with a gradation comparable to the natural stream.
3. Place riprap on face of culvert inlet and outlet.

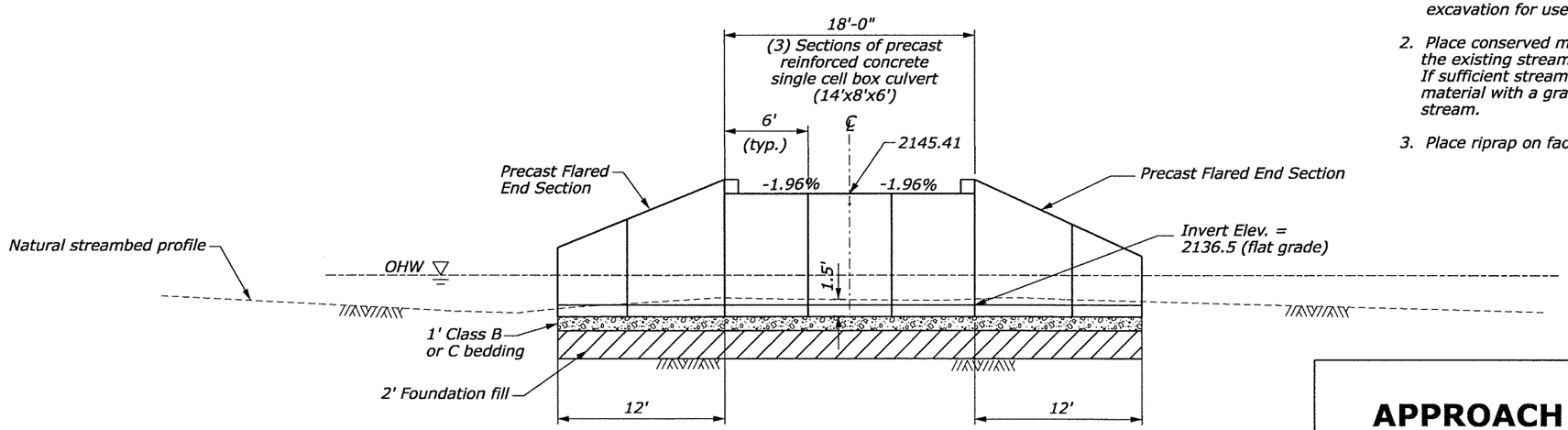

SECTION A-A

APPROACH BOX CULVERT 170+66

Matt Ulberg 2/2006 | Checked by: Vaughn Anderson 2/2006 | Designed by: 15-Aug-2007 10:00 AM

F:\fha\5019\IDPFH8011US.dgn

STATE	PROJECT	SHEET NUMBER
ID	PFH 80-1(1)	H.17

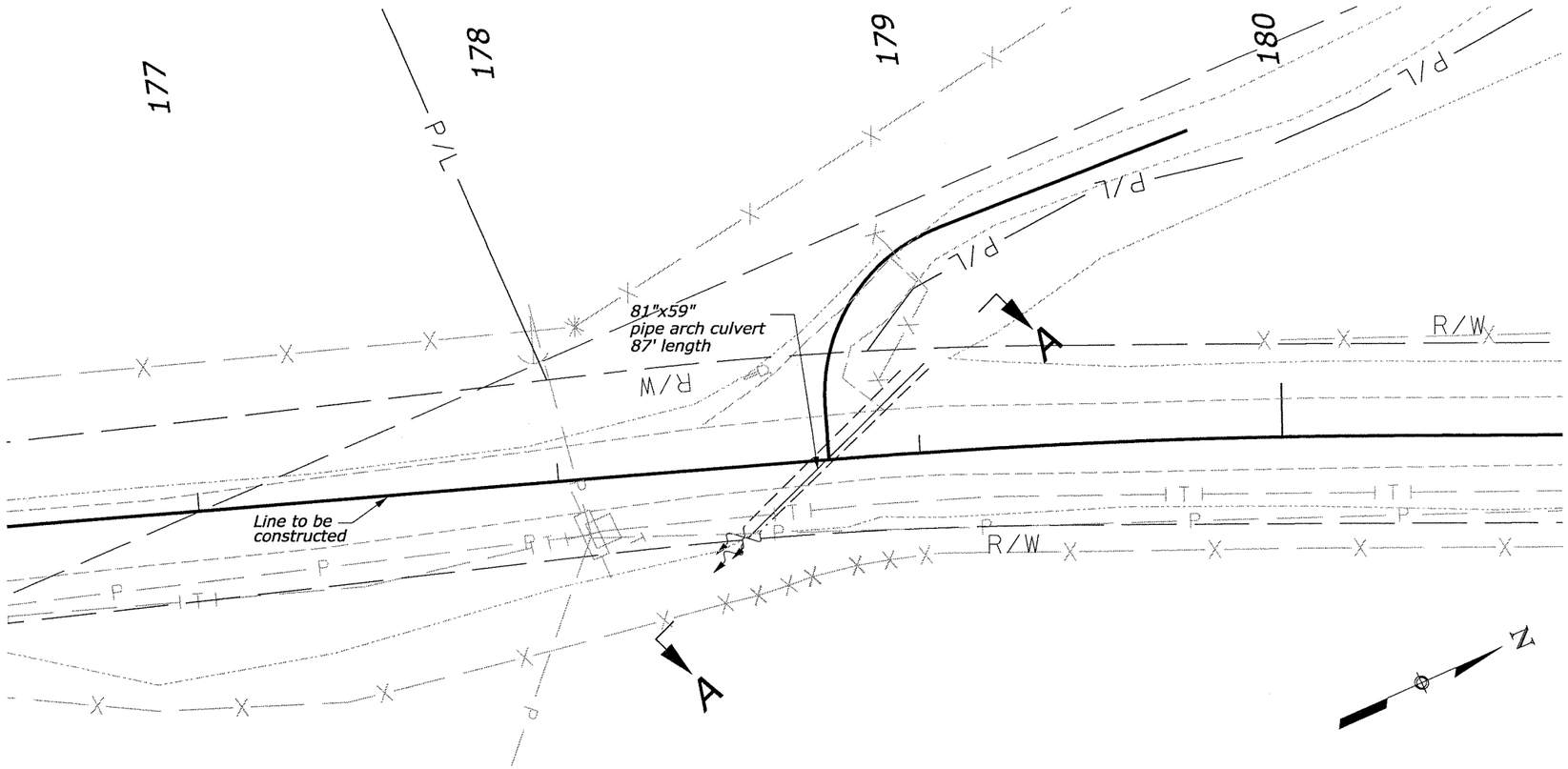

PRELIMINARY

PLAN VIEW

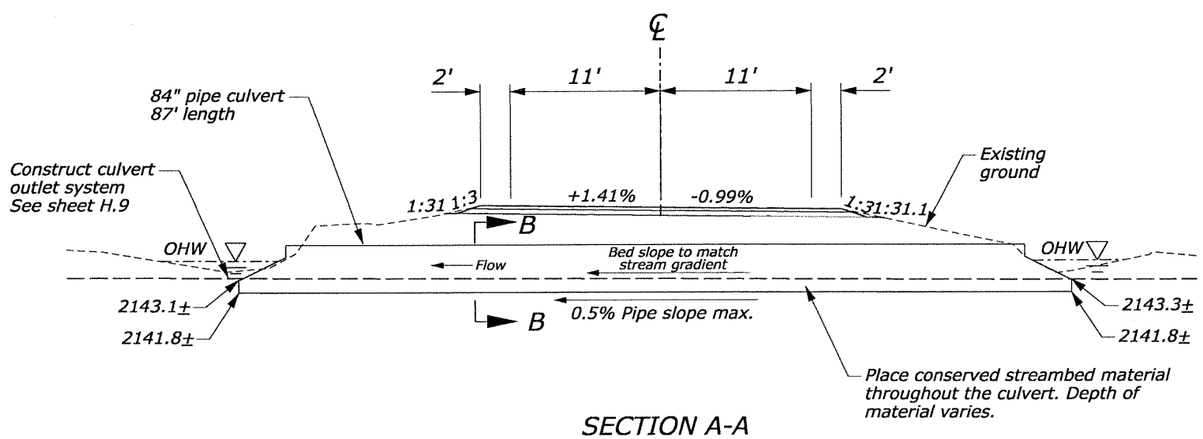

SECTION A-A

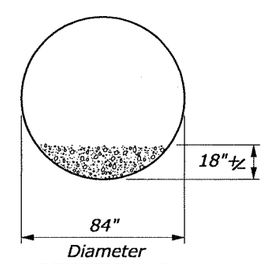

SECTION B-B

NOTE:

1. Conserve suitable material encountered in the excavation for use as streambed material.
2. Place conserved material in the culvert to match the existing streambed slope as closely as possible. If sufficient streambed material is not available, use material with a gradation comparable to the natural stream.
3. Place riprap on face of culvert inlet and outlet.

PIPE CULVERT
178+74

Designed by: Matt Ulberg 2/2006 | Checked by: Vaughn Anderson 2/2006 | 15-Aug-2007 10:06 AM | F:\fha\5019\DPFH8011QQN.dgn

STATE	PROJECT	SHEET NUMBER
ID	PFH 80-1(1)	H.18

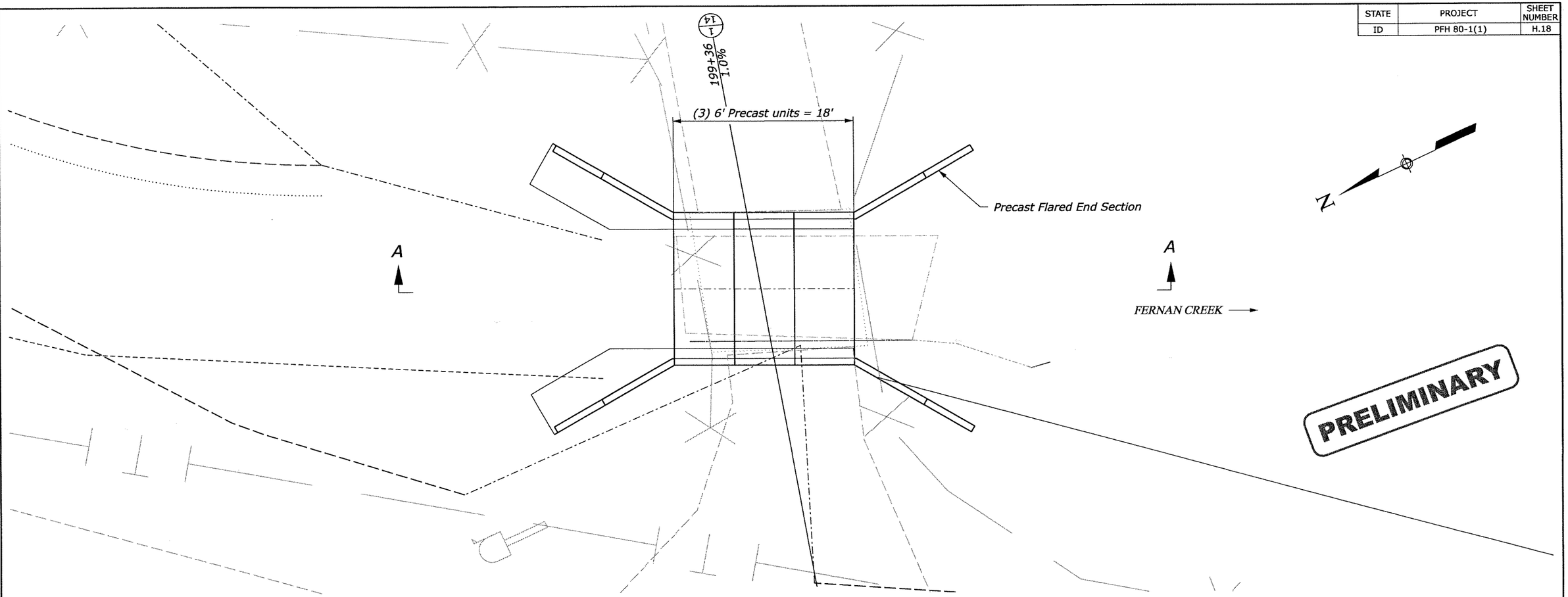

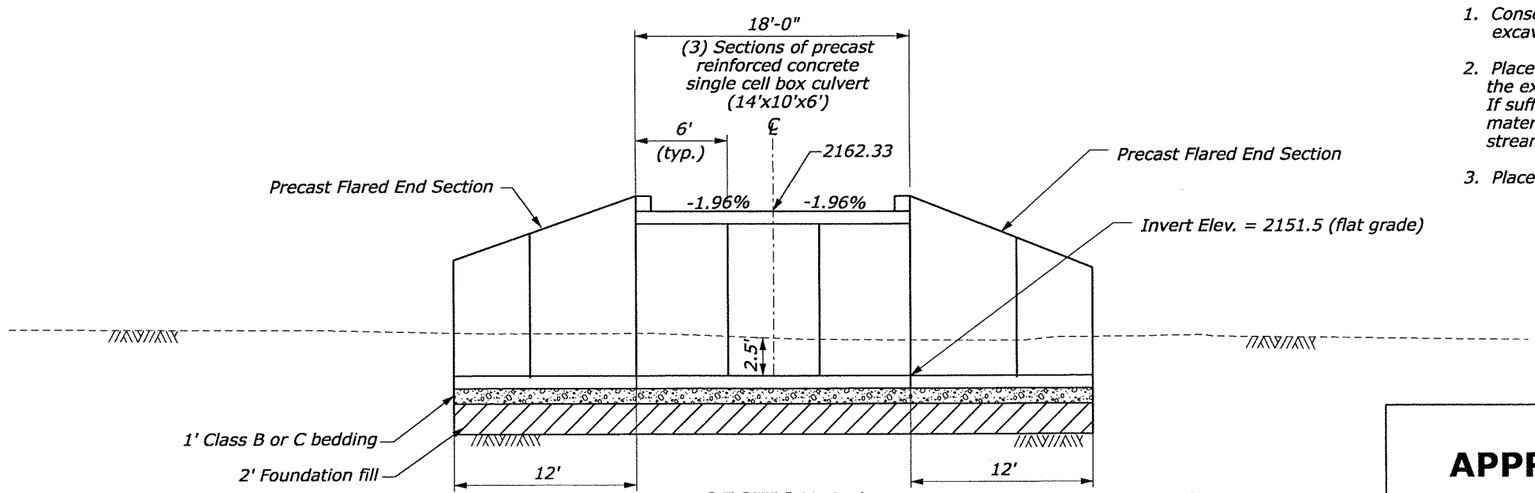

SECTION A-A

NOTE:

1. Conserve suitable material encountered in the excavation for use as streambed material.
2. Place conserved material in the culvert to match the existing streambed slope as closely as possible. If sufficient streambed material is not available, use material with a gradation comparable to the natural stream.
3. Place riprap on face of culvert inlet and outlet.

APPROACH BOX CULVERT 199+36

F:\fha\5019\IDPFH8011UP.dgn | 15-Aug-2007 10:09 AM | Designed by: Matt Ulberg | 2/2006 | Checked by: Vaughn Anderson | 2/2006

STATE	PROJECT	SHEET NUMBER
ID	PFH 80-1(1)	H.19

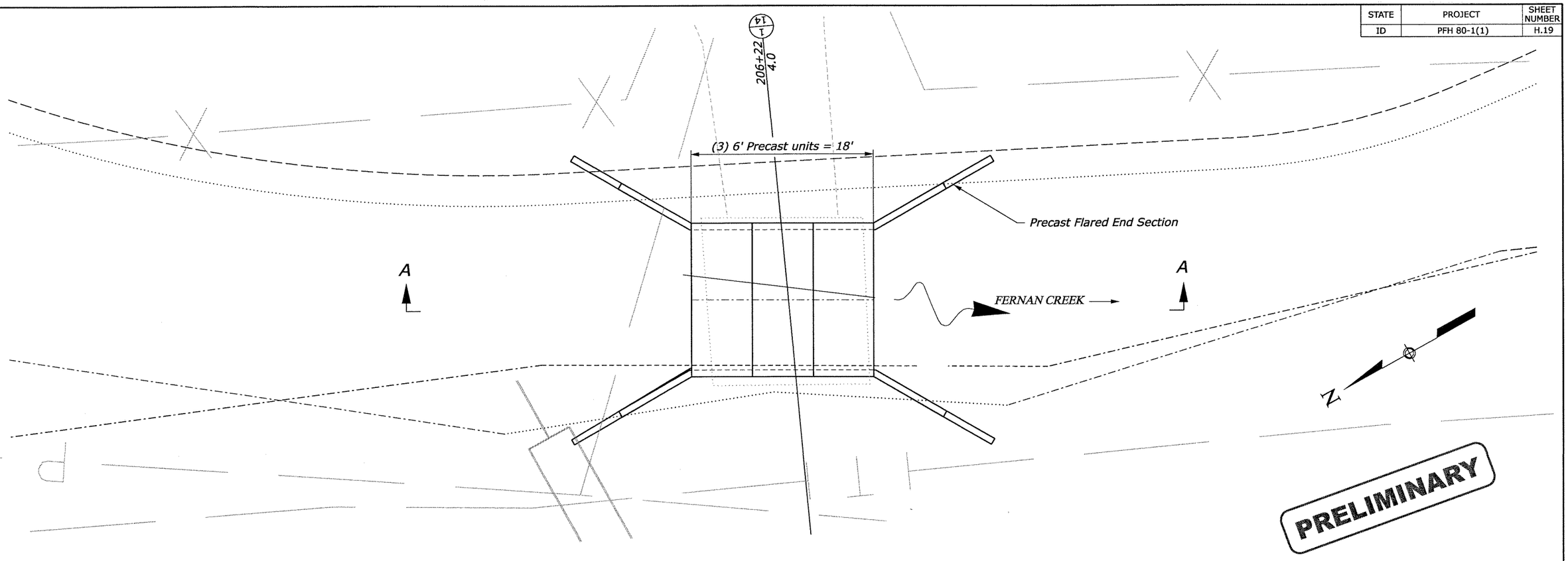

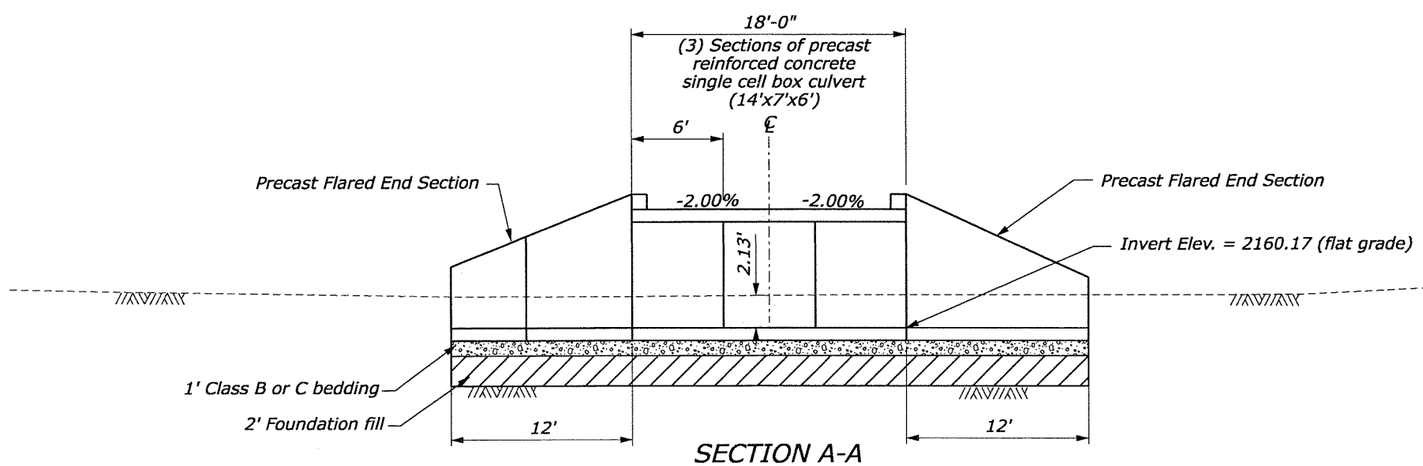

SECTION A-A

NOTE:

1. Conserve suitable material encountered in the excavation for use as streambed material.
2. Place conserved material in the culvert to match the existing streambed slope as closely as possible. If sufficient streambed material is not available, use material with a gradation comparable to the natural stream.
3. Place riprap on face of culvert inlet and outlet.

APPROACH BOX CULVERT 206+22

Designed by: Matt Ulberg 2/2006
Checked by: Vaughn Anderson 2/2006
15-Aug-2007 10:10 AM
F:\fha\5019\DPFH8011UQ.dgn

STATE	PROJECT	SHEET NUMBER
ID	PFH 80-1(1)	H.20

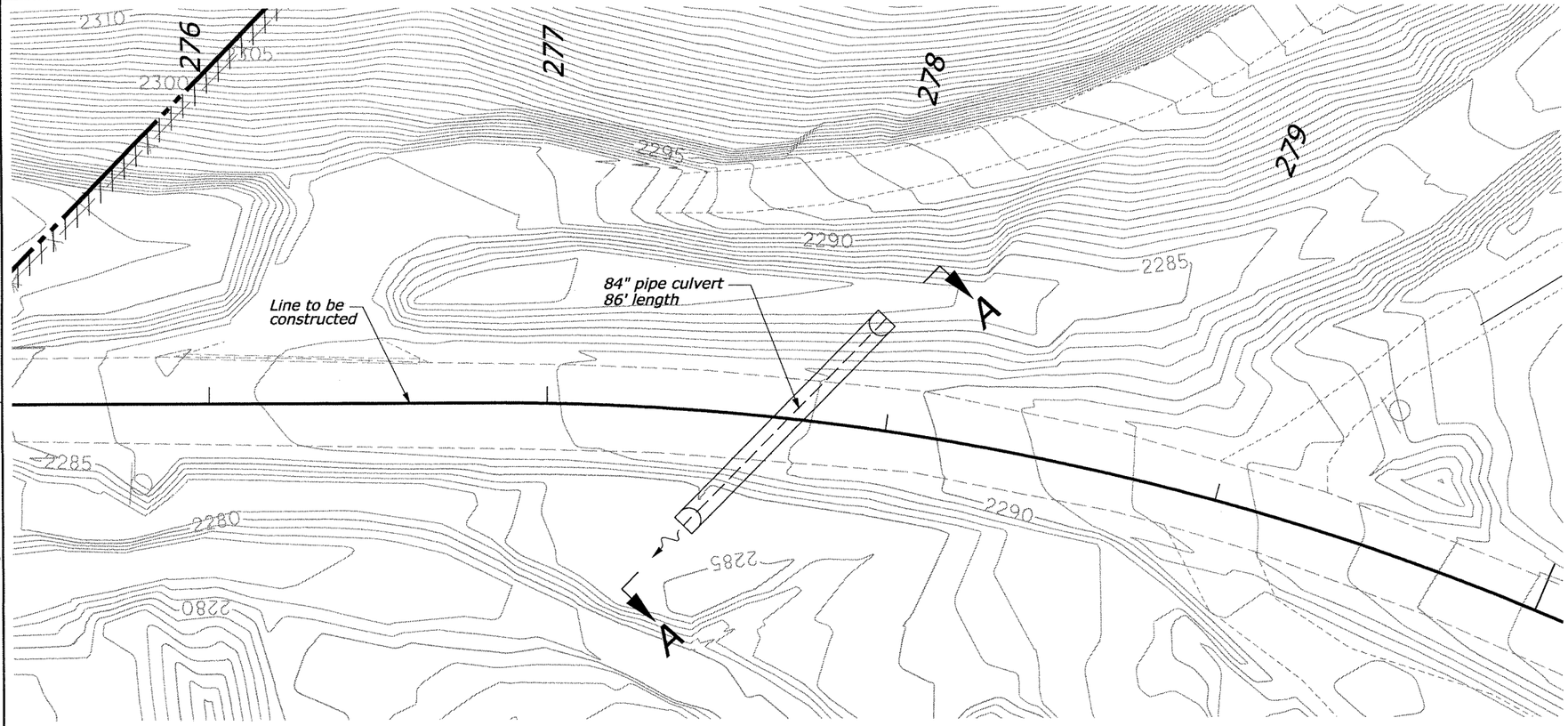

PLAN VIEW

PRELIMINARY

NOTE:

1. Set pipe 1' below natural stream grade at inlet, and 2.5' below natural stream grade at outlet as shown.
2. Conserve suitable material encountered in the excavation for use as streambed material.
3. Place conserved material in the culvert to match the existing streambed slope as closely as possible. If sufficient streambed material is not available, use material with a gradation comparable to the natural stream.
4. Place riprap on face of culvert inlet and outlet.

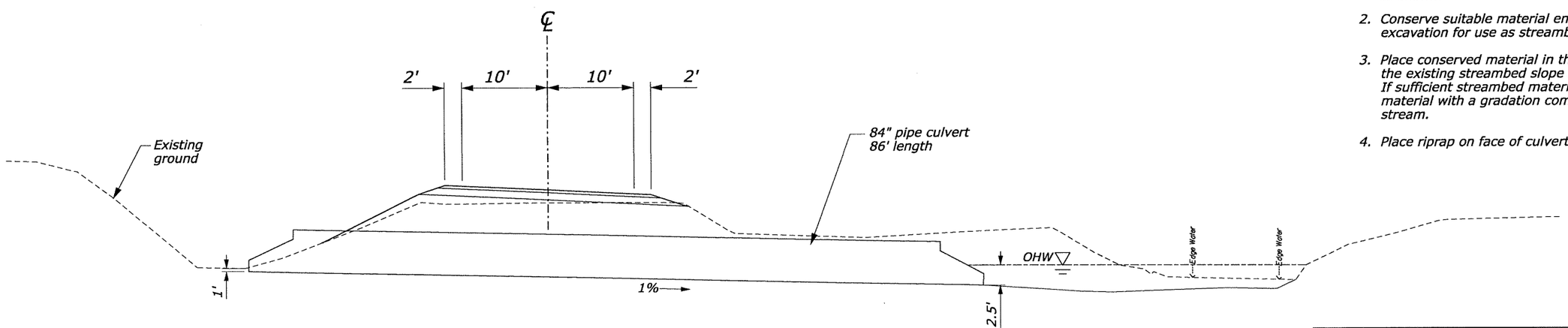

SECTION A-A

PIPE CULVERT
277+70

Designed by: Matt Ulberg 2/2006
Checked by: Vaughn Anderson 2/2006
15-Aug-2007 10:14 AM
F:\fha\5019\DPFH80110QO.dgn

STATE	PROJECT	SHEET NUMBER
ID	PFH 80-1(1)	K.1

CONTROL POINTS

NAME	NORTHING	EASTING	ELEVATION
301	2205600.487	2396424.075	2299.858
350	2205230.006	2396035.792	2284.464

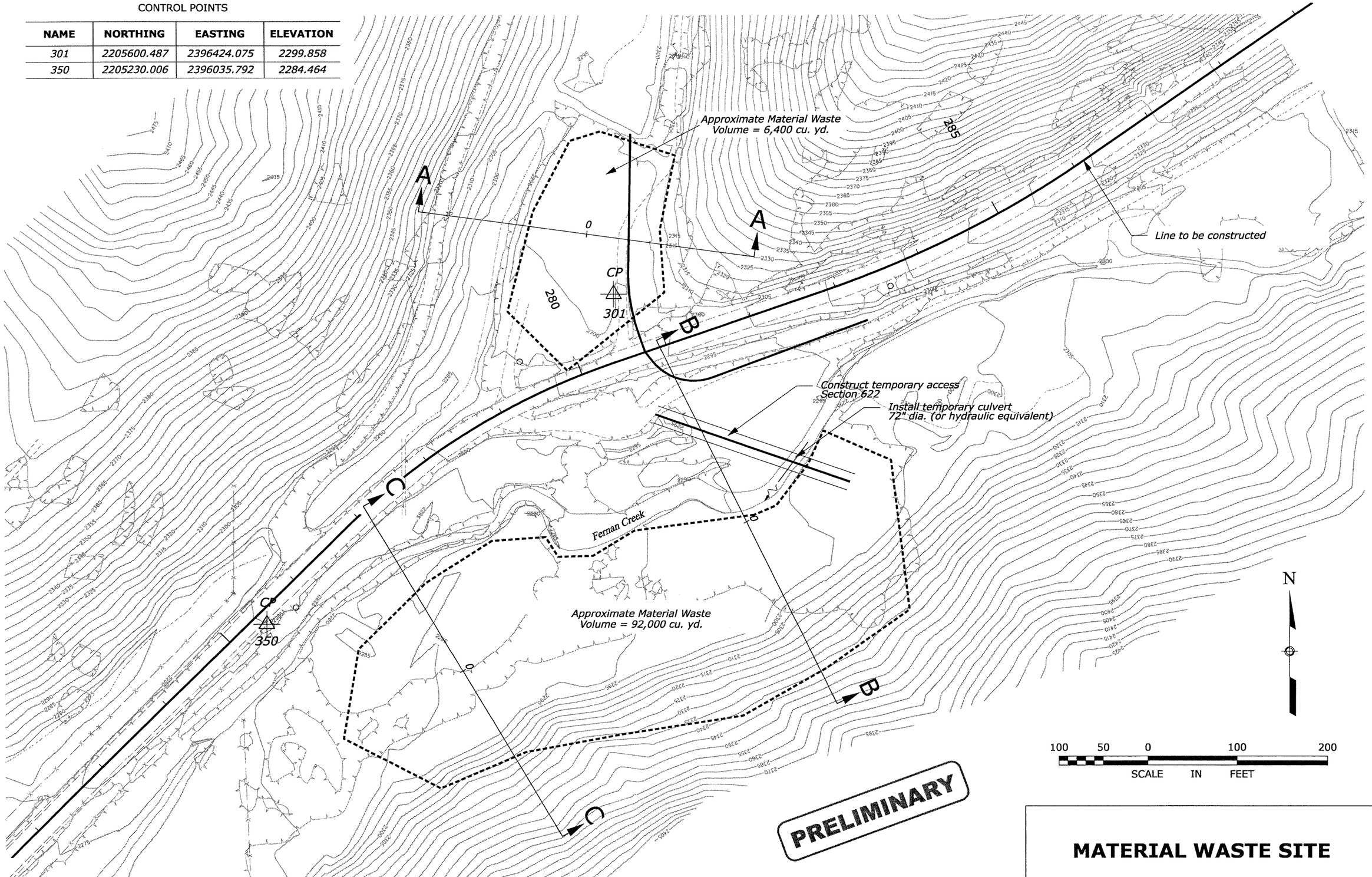

MATERIAL WASTE SITE

F:\fha\5019\IDPFH8011UF.dgn 15-Aug-2007 10:37 AM Designed by: Matt Ulberg 2/2006 Checked by: Vaughn Anderson 2/2006

STATE	PROJECT	SHEET NUMBER
ID	PFH 80-1(1)	L.3

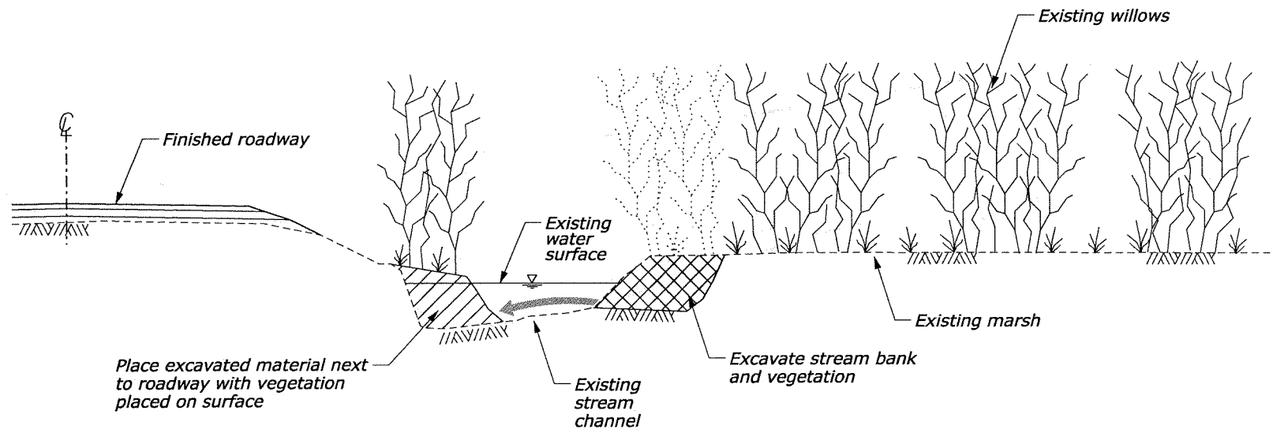

PRELIMINARY

STREAM REHABILITATION
150+00 to 165+50 RT
166+50 to 170+00 RT

NOTE:

1. Specific stream alignment not shown. Excavate vegatated bank as required or as directed by the CO.

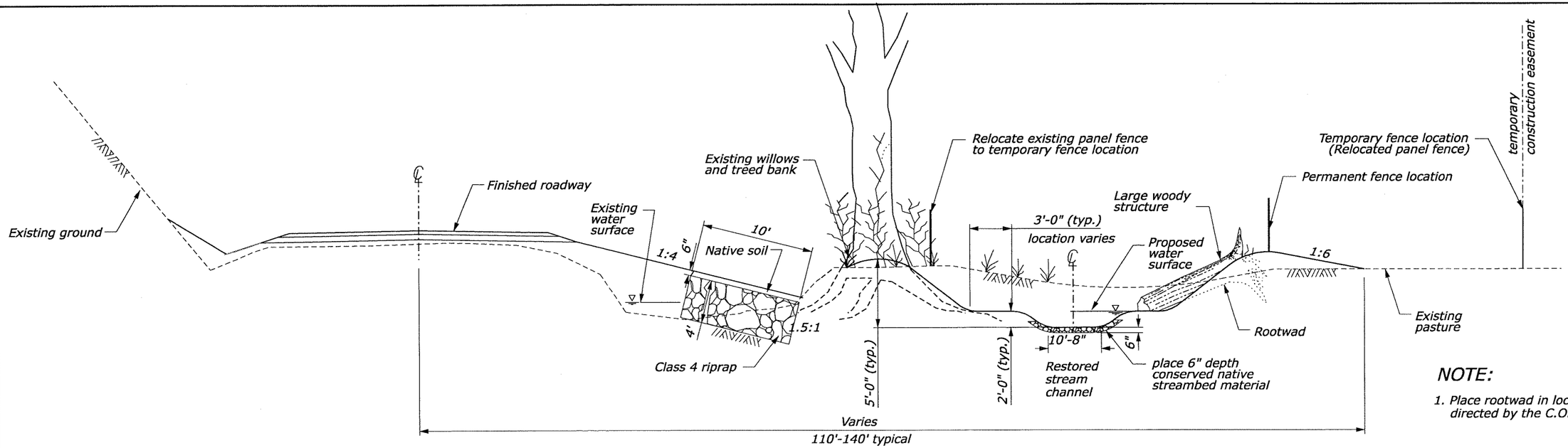

STREAM RESTORATION
199+40 to 217+40 RT

NOTE:

1. Place rootwad in locations as directed by the C.O.

STREAM REHABILITATION, REALIGNMENT AND RESTORATION DETAIL

Designed by: Matt Ulberg 2/2006 | Checked by: Vaughn Anderson 2/2006 | 15-Aug-2007 10:44 AM | F:\Pha\50191\DPFH8011TG2.dgn

STATE	PROJECT	SHEET NUMBER
ID	PFH 80-1(1)	L.4

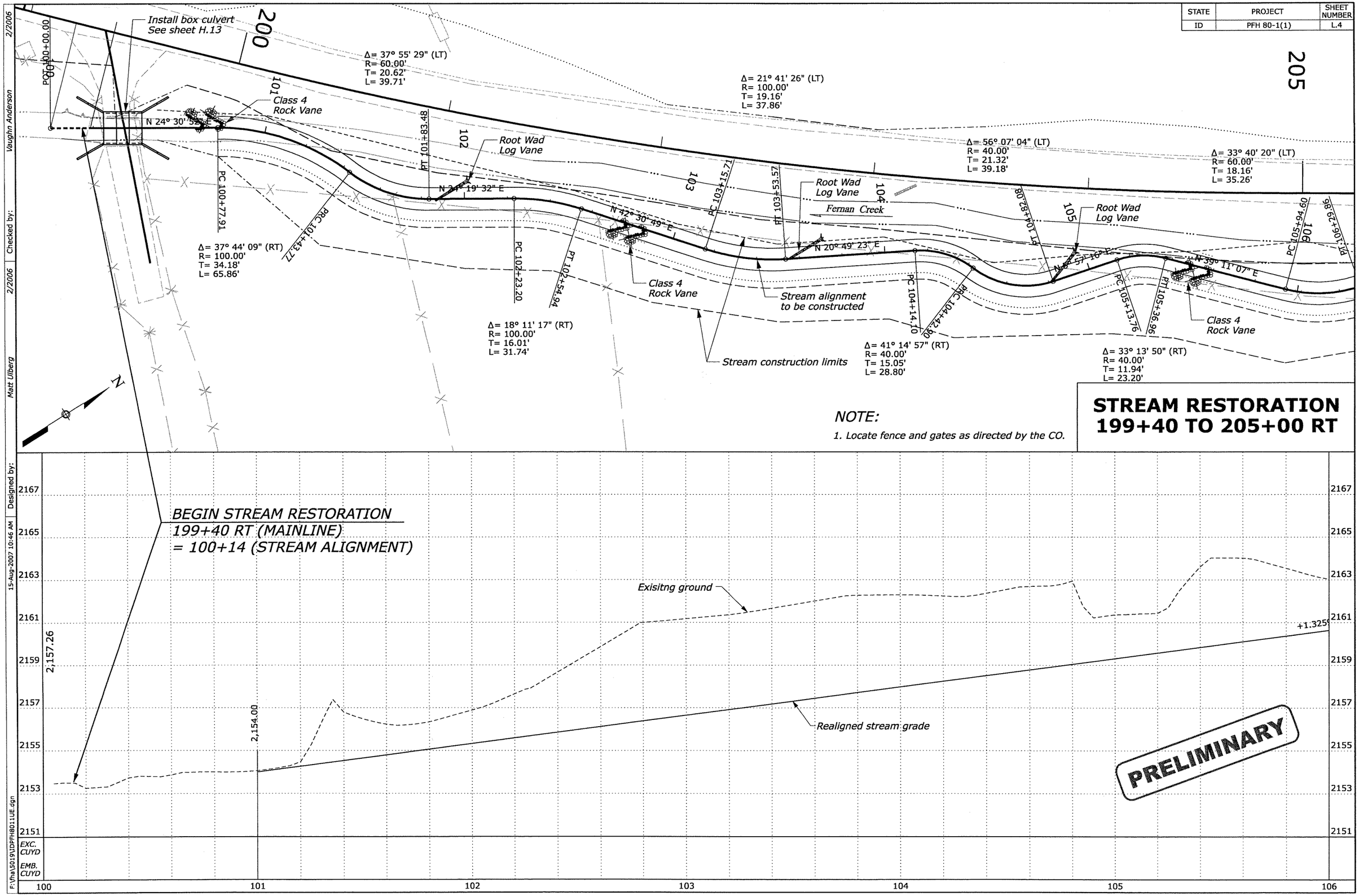

Designed by: Matt Ulberg 2/2006
Checked by: Vaughn Anderson 2/2006
15-Aug-2007 10:46 AM
F:\fha\5019\DPFH8011UE.dgn

STATE	PROJECT	SHEET NUMBER
ID	PFH 80-1(1)	L.5

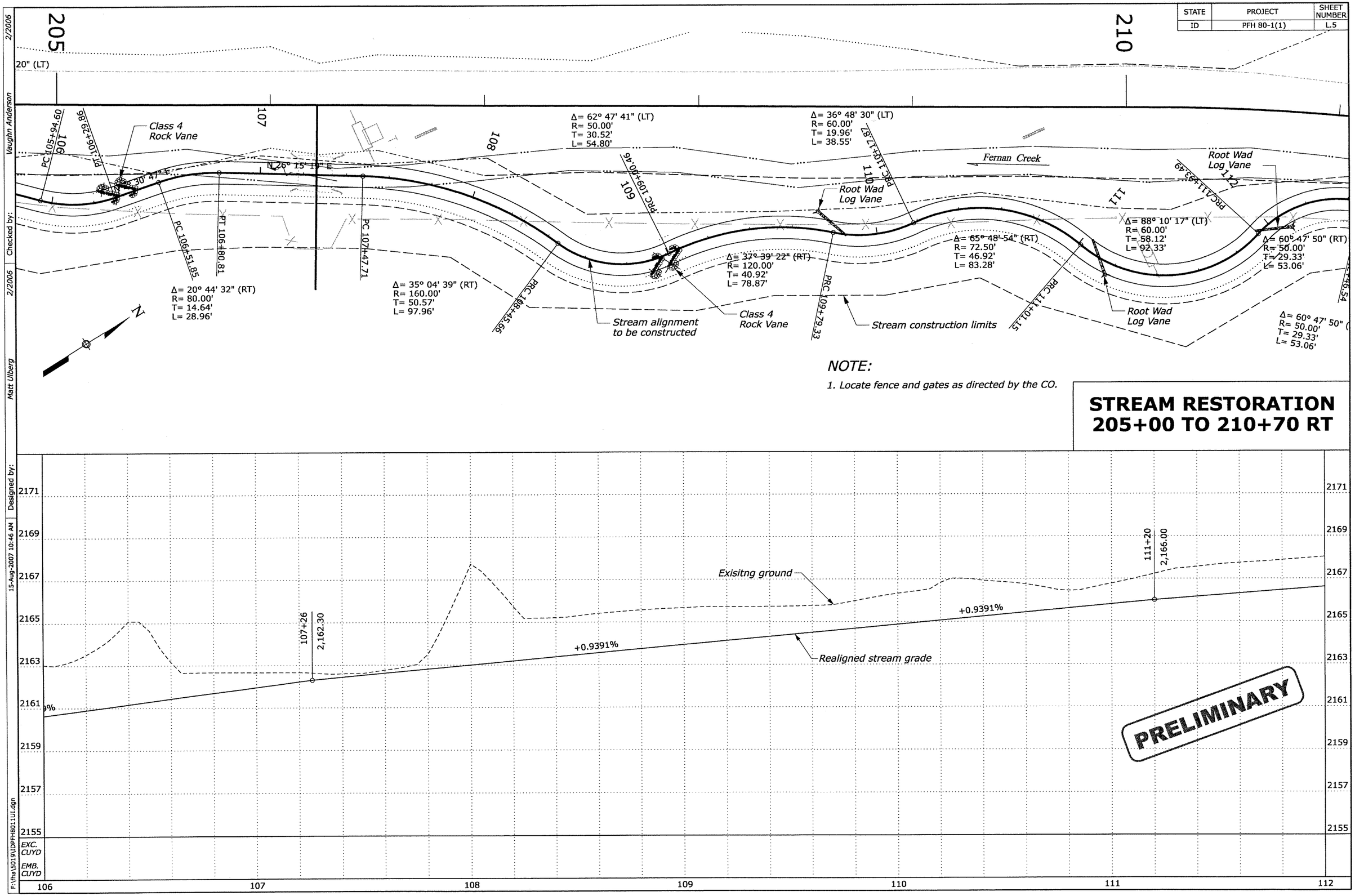

NOTE:

1. Locate fence and gates as directed by the CO.

STREAM RESTORATION 205+00 TO 210+70 RT

Designed by: Vaughn Anderson 2/2006
Checked by: Matt Ulberg 2/2006
15-Aug-2007 10:46 AM
F:\fha\5019\DPFH8011U1.dgn

STATE	PROJECT	SHEET NUMBER
ID	PFH 80-1(1)	L.6

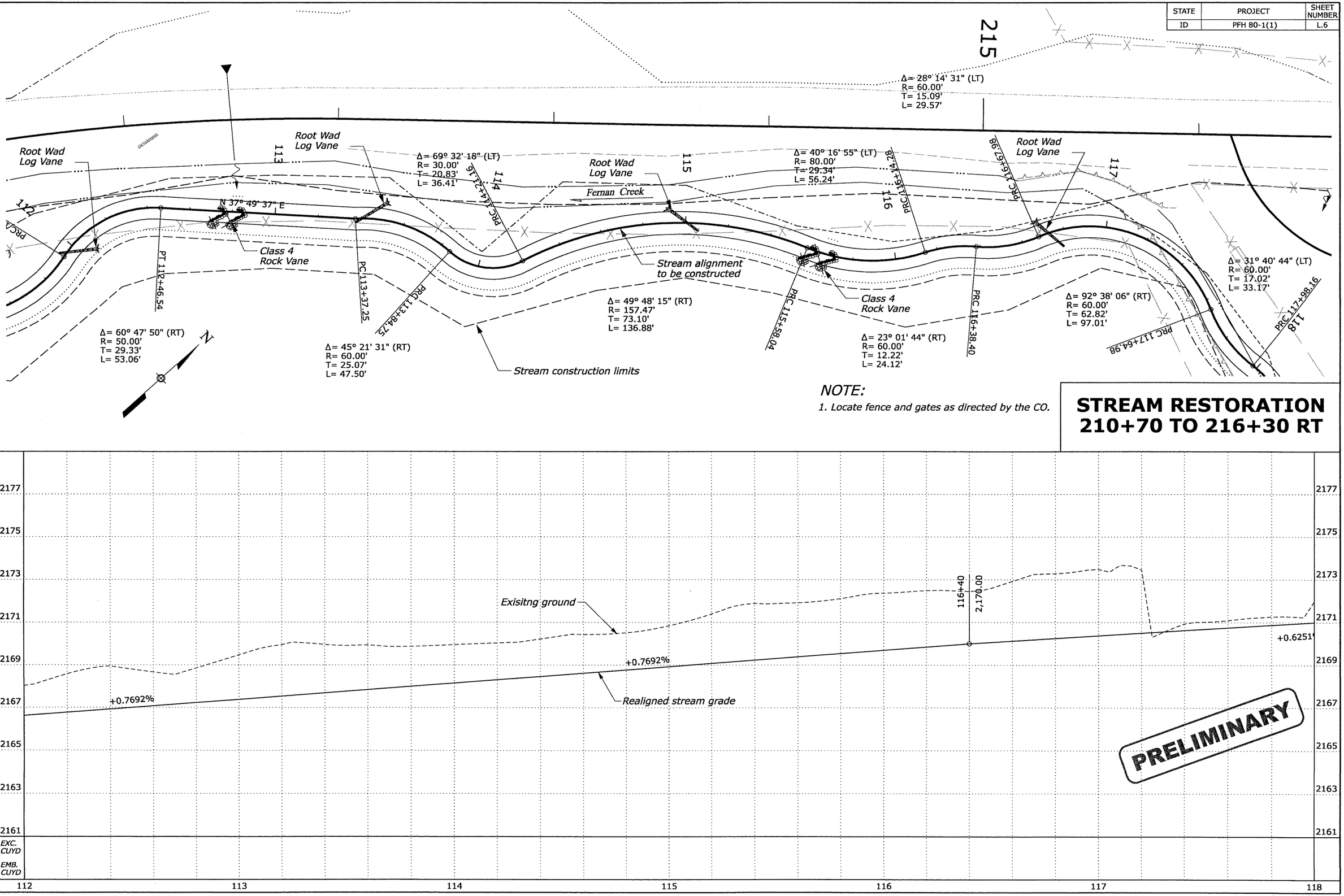

NOTE:

1. Locate fence and gates as directed by the CO.

STREAM RESTORATION 210+70 TO 216+30 RT

Designed by: Matt Ulberg 2/2006 | Checked by: Vaughn Anderson 2/2006 | 15-Aug-2007 10:47 AM | F:\Vha\5019\DPFH8011U1.dgn

STATE	PROJECT	SHEET NUMBER
ID	PFH 80-1(1)	L.7

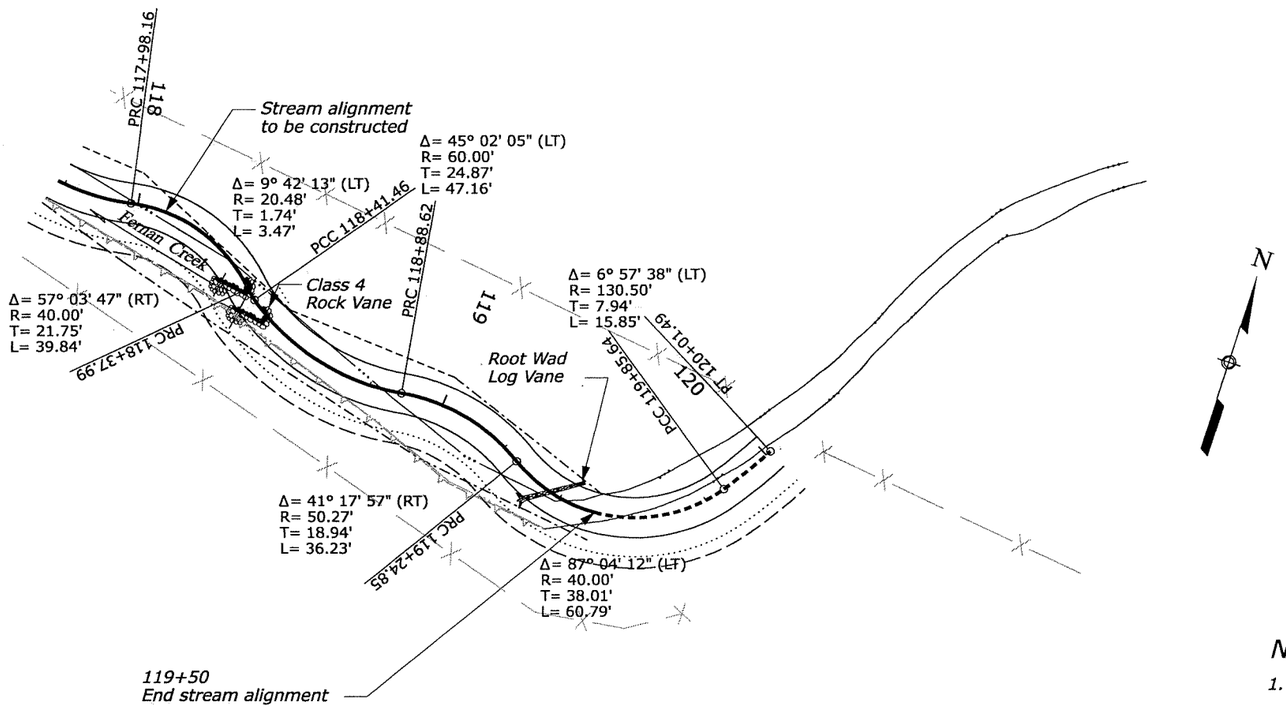

PRELIMINARY

NOTE:

1. Locate fence and gates as directed by the CO.

STREAM RESTORATION 216+30 TO 217+40 RT

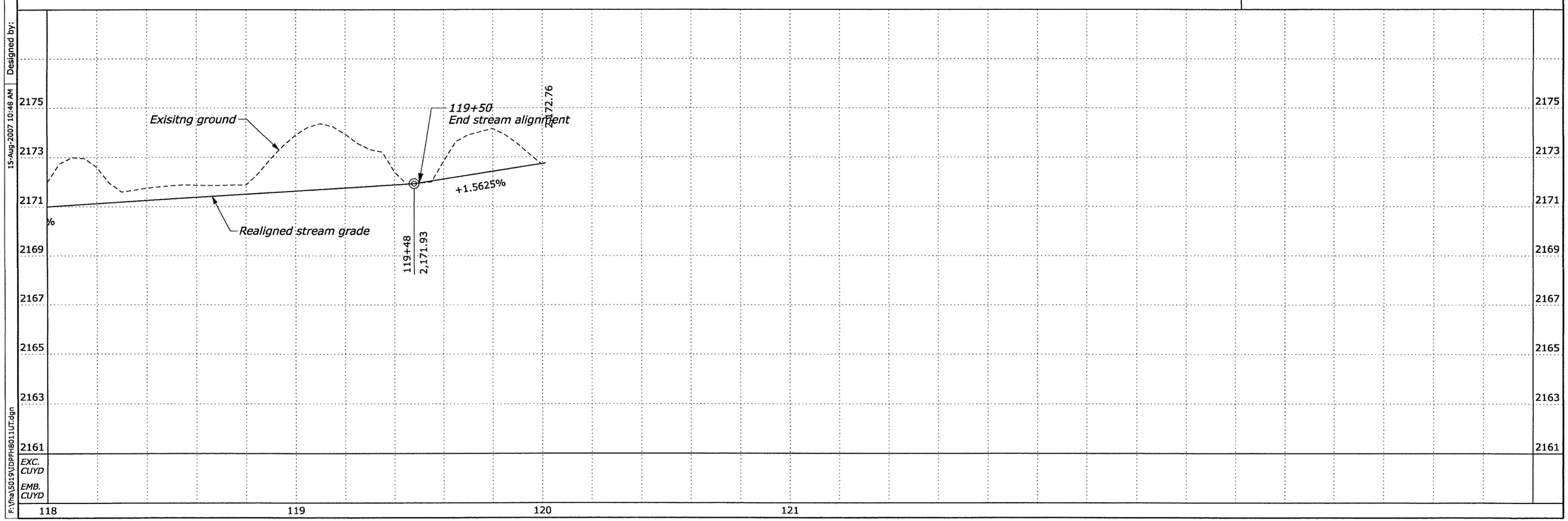

Designed by: Matt Ulberg | Checked by: Vaughn Anderson | 2/2006 | 2/2006

15-Aug-2007 10:48 AM

F:\Vha\5019\DPFH8011UT.dgn

STATE	PROJECT	SHEET NUMBER
ID	PFH 80-1(1)	L.8

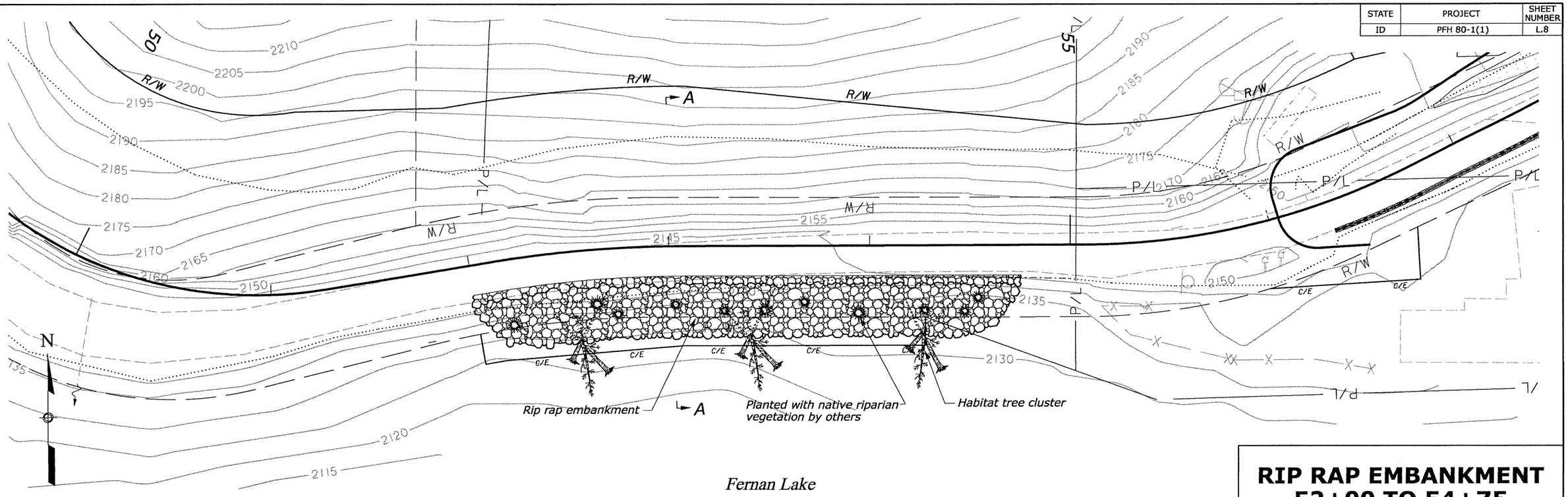

RIP RAP EMBANKMENT 52+00 TO 54+75

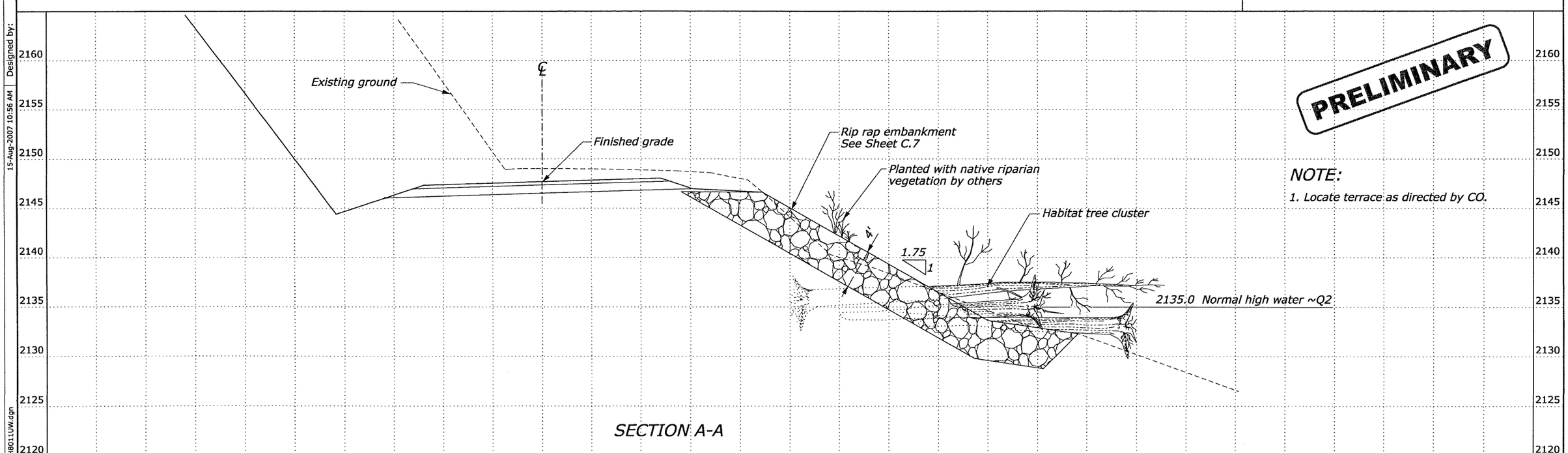

PRELIMINARY

NOTE:

1. Locate terrace as directed by CO.

EXC. CUYD	
EMB. CUYD	

Designed by: Matt Ulberg 2/2006 | Checked by: Vaughn Anderson 2/2006 | 15-Aug-2007 10:56 AM | F:\fha\5019\DPFH8011UW.dgn

STATE	PROJECT	SHEET NUMBER
ID	PFH 80-1(1)	L.9

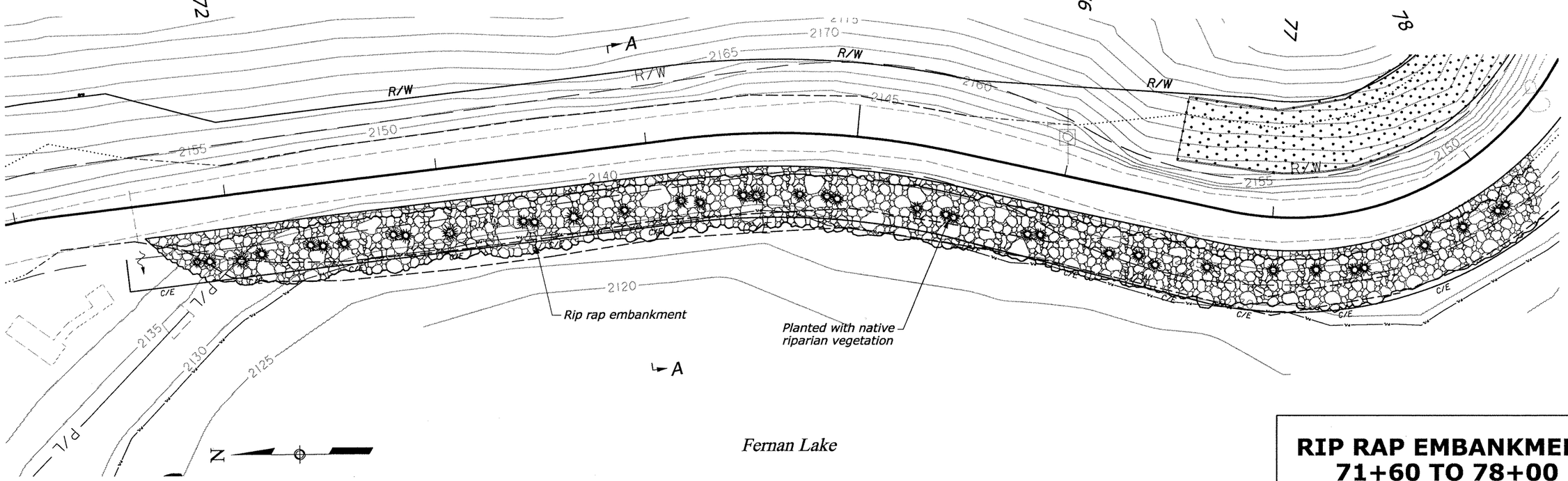

RIP RAP EMBANKMENT 71+60 TO 78+00

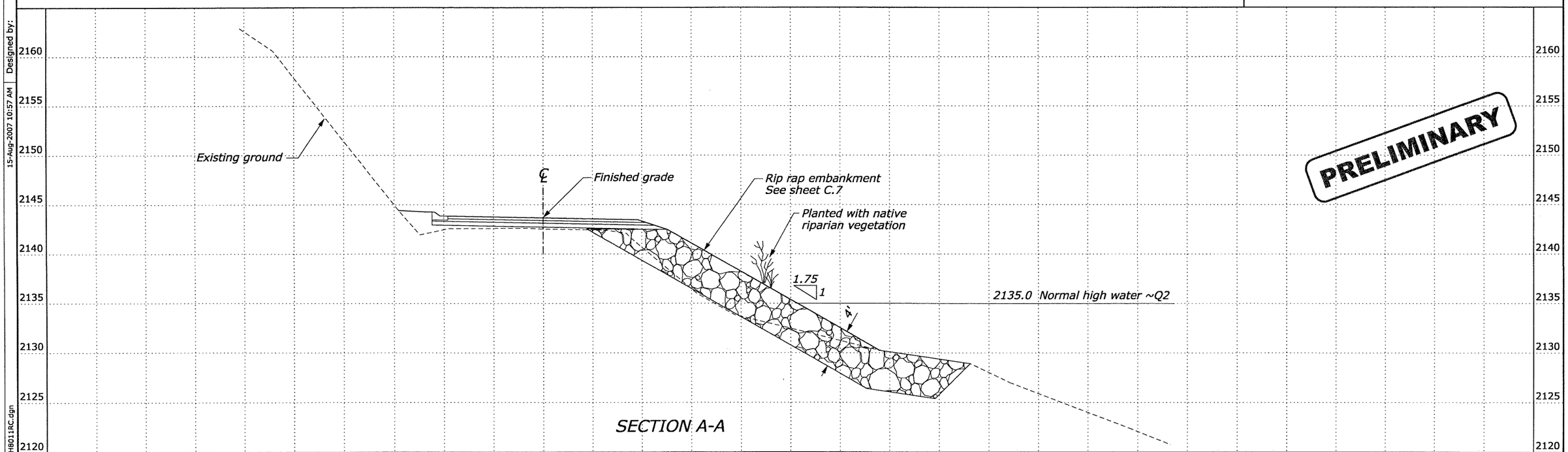

SECTION A-A

PRELIMINARY

EXC. CUYD

EMB. CUYD

Designed by: Matt Ulberg 2/2006 | Checked by: Vaughn Anderson 2/2006

15-Aug-2007 10:57 AM

F:\fha\5019\IDPFH8011RC.dgn

STATE	PROJECT	SHEET NUMBER
ID	PFH 80-1(1)	L.10

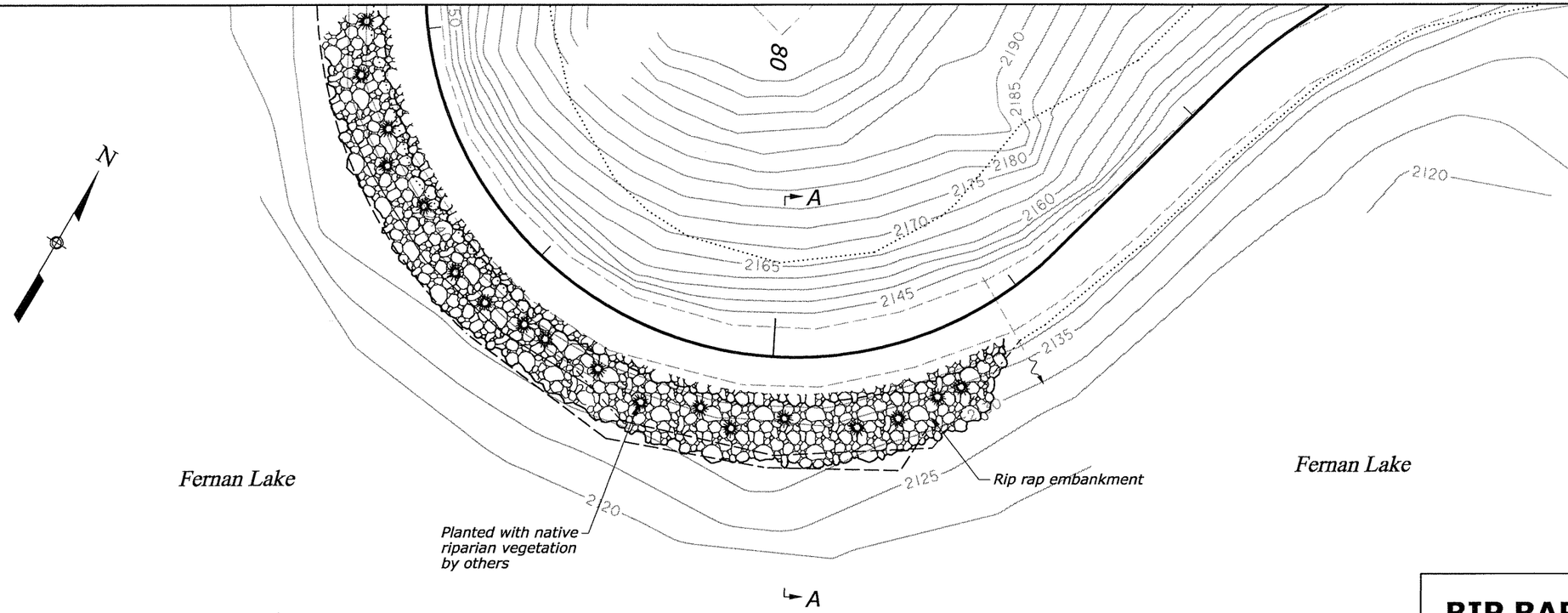

RIP RAP EMBANKMENT 78+00 TO 80+90

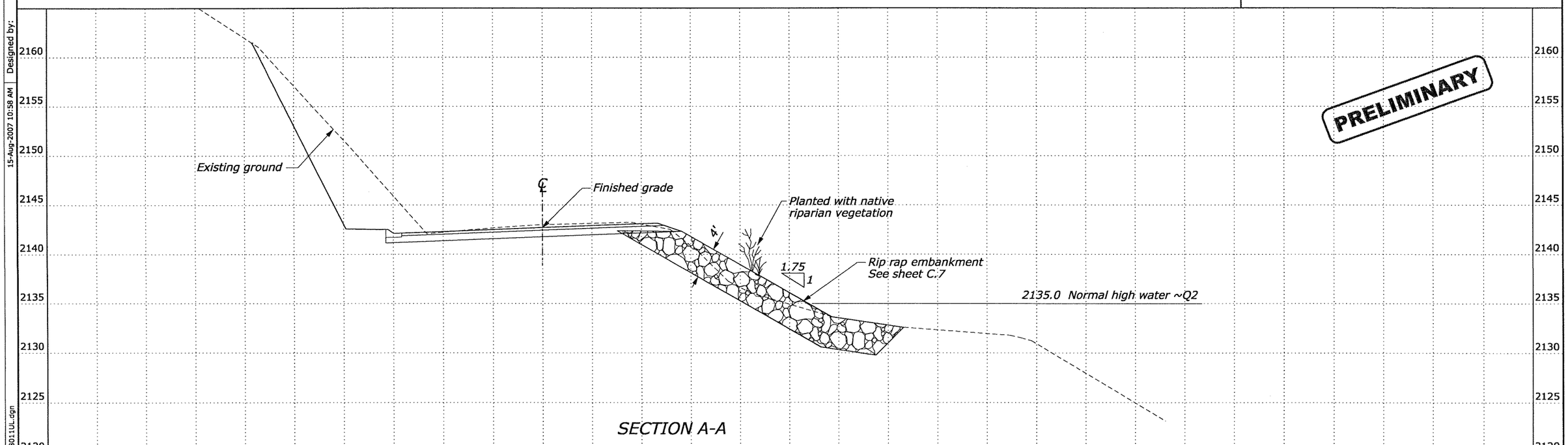

EXC. CUYD	
EMB. CUYD	

Designed by: Matt Ulberg 2/2006 | Checked by: Vaughn Anderson 2/2006

15-Aug-2007 10:58 AM

F:\Pha\5019\DPFH8011UL.dgn

STATE	PROJECT	SHEET NUMBER
ID	PFH 80-1(1)	L.11

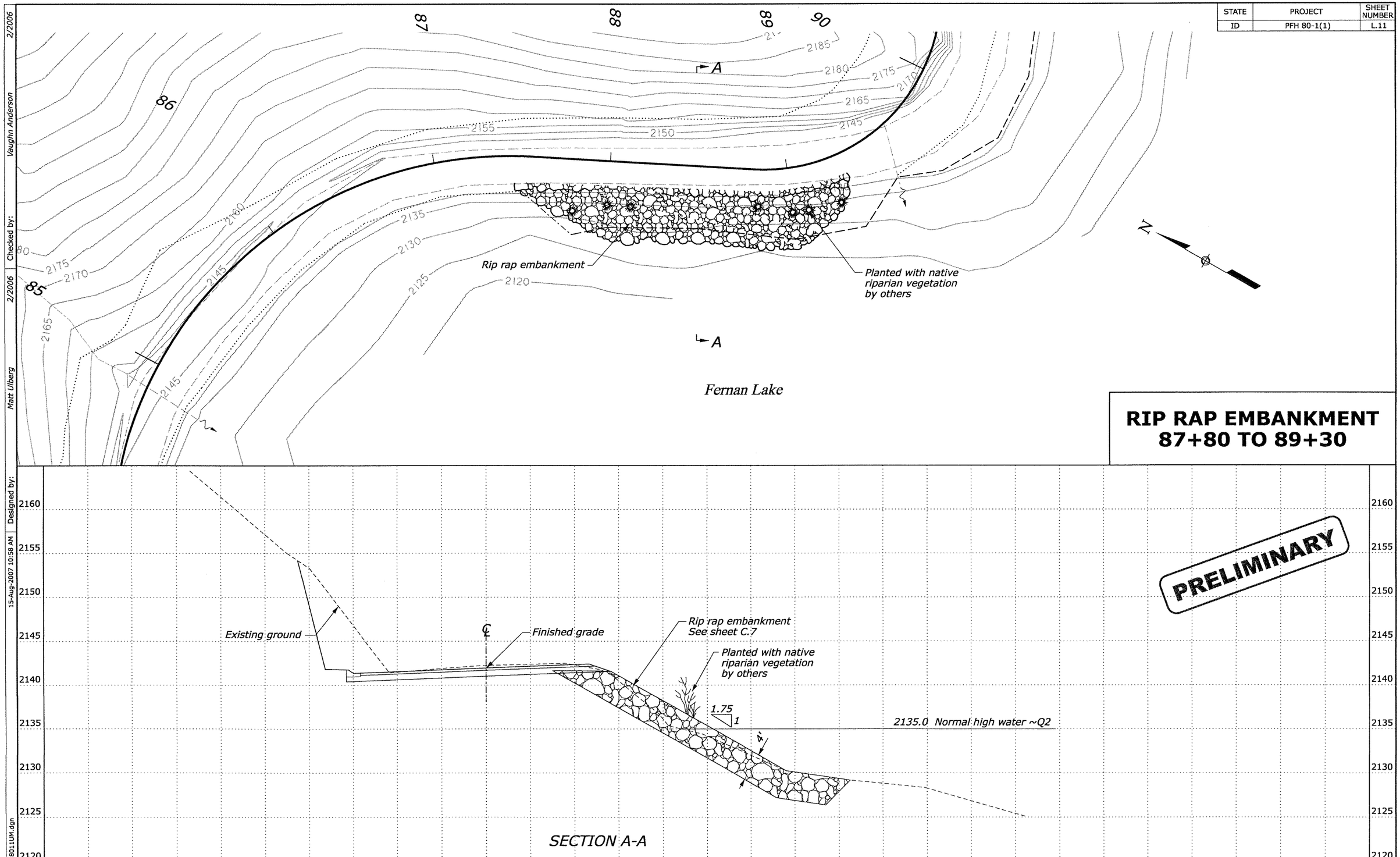

RIP RAP EMBANKMENT 87+80 TO 89+30

EXC. CUYD

EMB. CUYD

Designed by: Matt Ulberg 2/2006

Checked by: Vaughn Anderson 2/2006

15-Aug-2007 10:58 AM

F:\fha\5019\DPFH8011UM.dgn

STATE	PROJECT	SHEET NUMBER
ID	PFH 80-1(1)	L.12

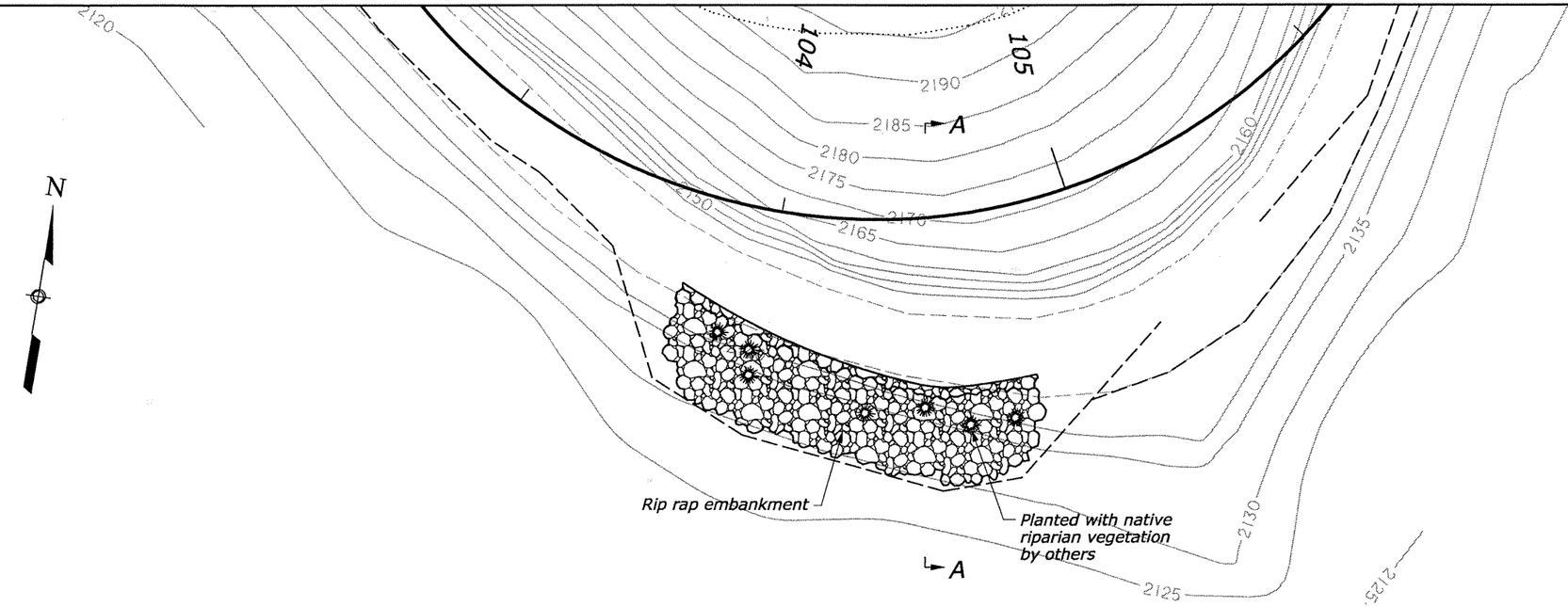

PRELIMINARY

RIP RAP EMBANKMENT 103+75 TO 104+80

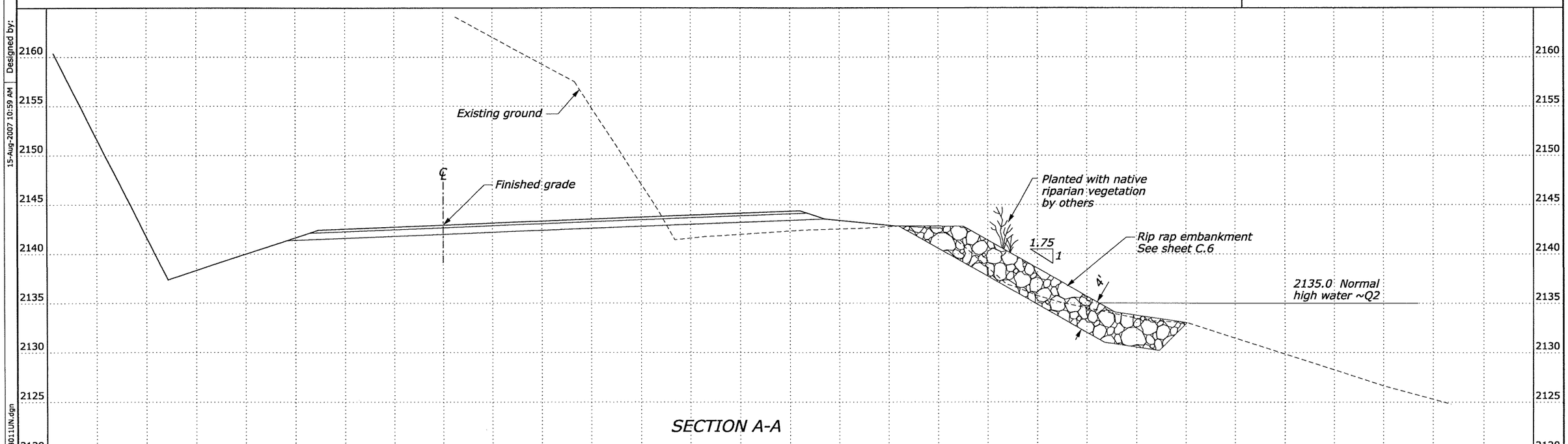

EXC. CUYD

EMB. CUYD

Designed by: Matt Ulberg 2/2006 | Checked by: Vaughn Anderson 2/2006

15-Aug-2007 10:59 AM

F:\Vha\5019\IDPFH8011UN.dgn

STATE	PROJECT	SHEET NUMBER
ID	PFH 80-1(1)	L.13

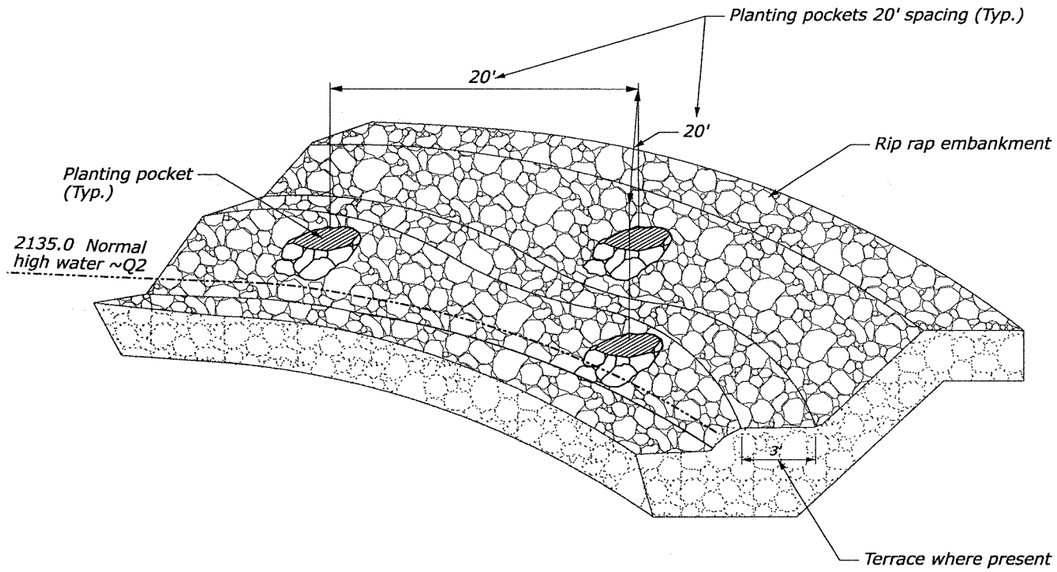

RIP RAP EMBANKMENT PLANTING DETAIL

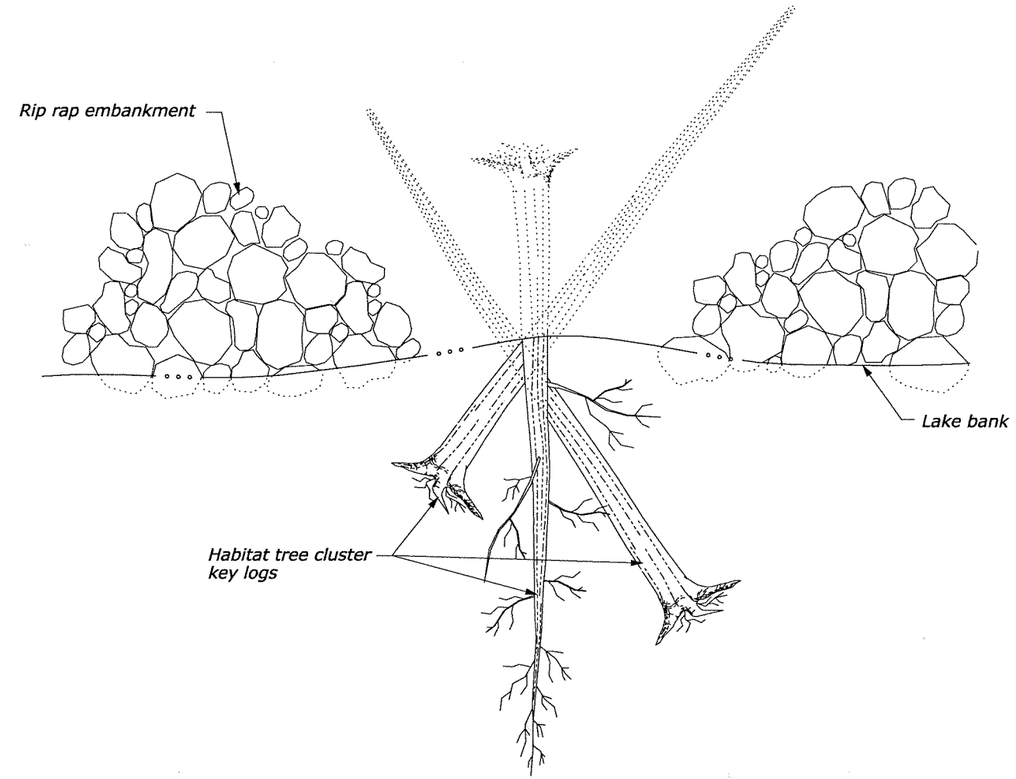

HABITAT TREE CLUSTER

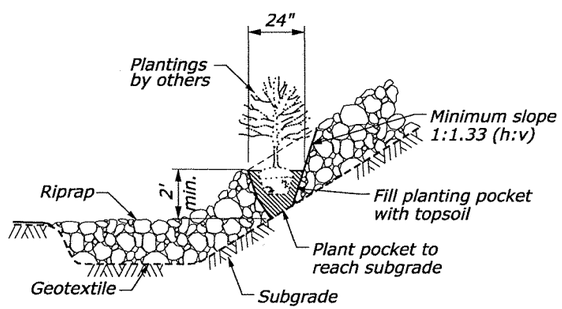

RIP RAP PLANTING POCKET DETAIL

NOTE:

1. See Section 622 for final placement of Habitat Tree Clusters.

PRELIMINARY

HABITAT TREE CLUSTER AND RIP RAP EMBANKMENT PLANTING DETAILS

Designed by: Matt Ulberg 2/2006
Checked by: Vaughn Anderson 2/2006
15-Aug-2007 10:59 AM
F:\fha\5019\ID\PFH8011RV.dgn

STATE	PROJECT	SHEET NUMBER
ID	PFH 80-1(1)	L.14

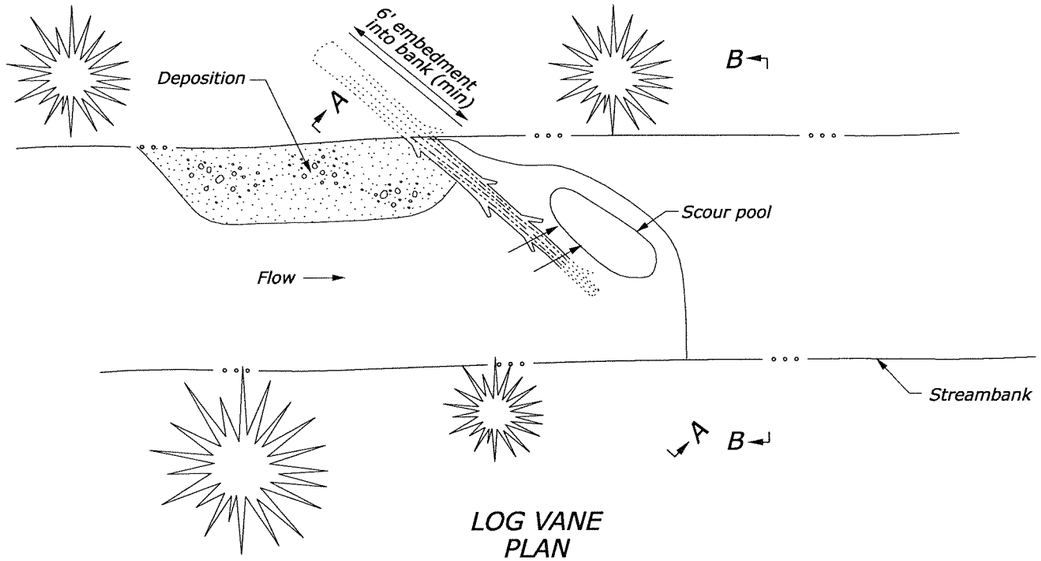

LOG VANE PLAN

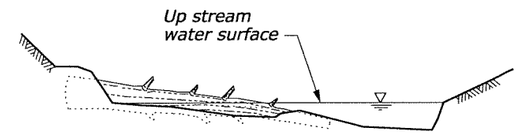

SECTION A-A

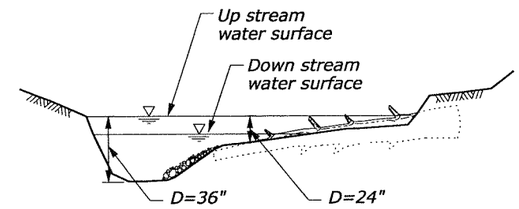

SECTION B-B

PRELIMINARY

ROOT WAD LOG VANE DETAILS

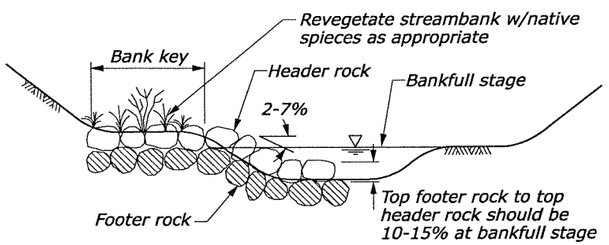

SECTION A-A

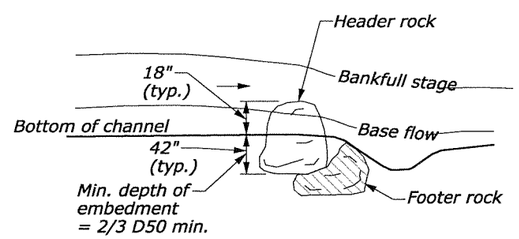

PROFILE VIEW

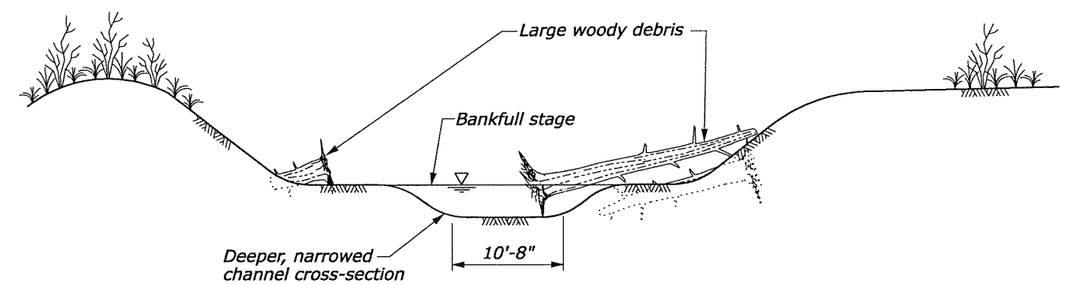

TYPICAL SECTION

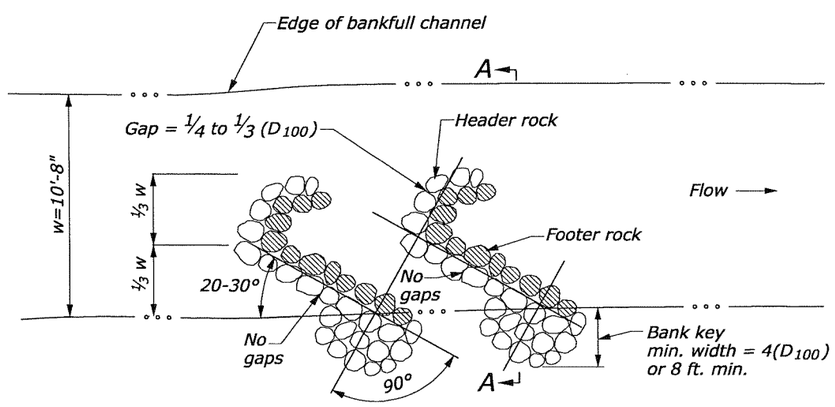

POROUS WEIR J-HOOK ROCK VANE DETAIL

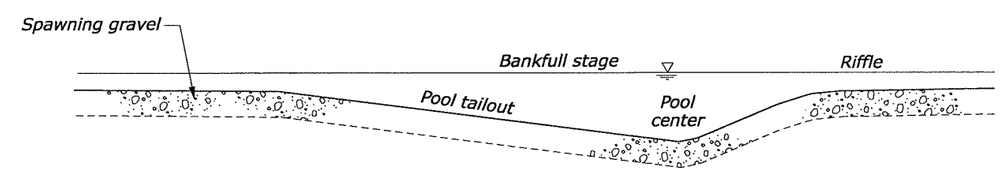

PROFILE SECTION

SPAWNING HABITAT - ENHANCED CONDITION DETAIL

STREAM HABITAT RESTORATION DETAILS

Designed by: Matt Ulberg 2/2006 | Checked by: Vaughn Anderson 2/2006 | 15-Aug-2007 11:00 AM | F:\fha\5019\DPFH8011RF.dgn