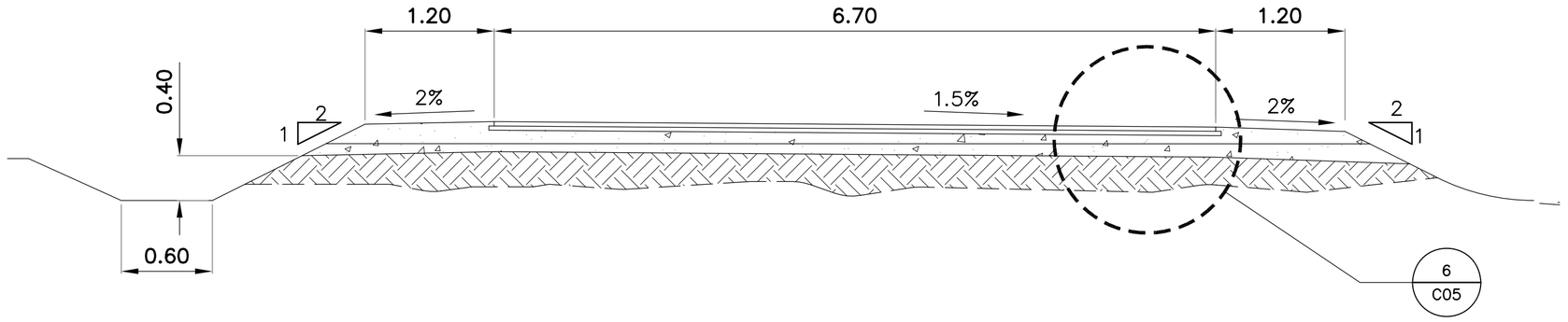

1 C05 TYPICAL OPERATIONS AREA ROAD SECTION
SCALE: NTS

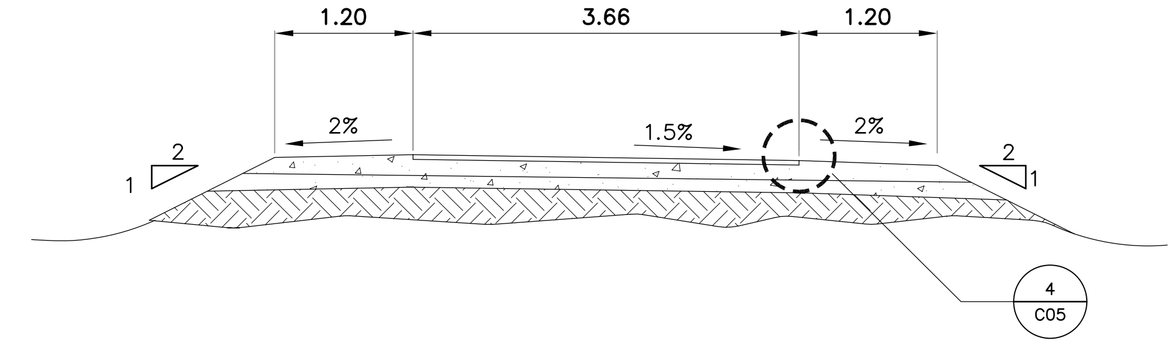

2 C05 TYPICAL SECTION ANTENNA ACCESS ROAD
SCALE: NTS

NOTES:

1. FOR FILL TYPES REFER TO SPECIFICATIONS SECTIONS:
   02050 – SOILS
   02060 – AGGREGATE
2. ALL DIMENSIONS ARE IN METERS UNLESS OTHERWISE SHOWN.

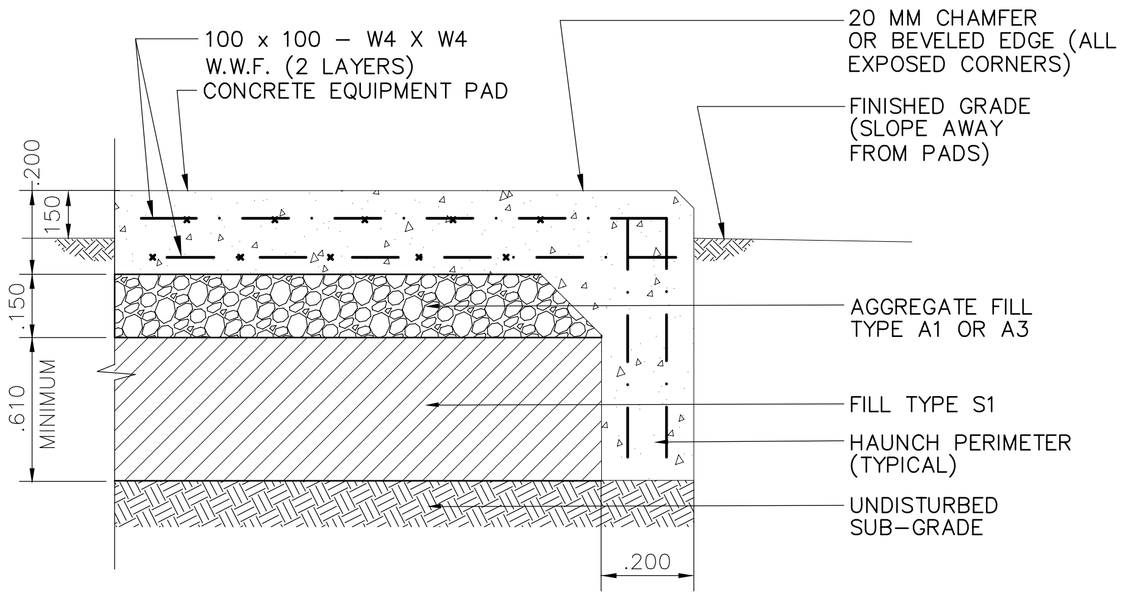

3 C05 CONC. EQUIP PAD (TYP)
SCALE: NTS

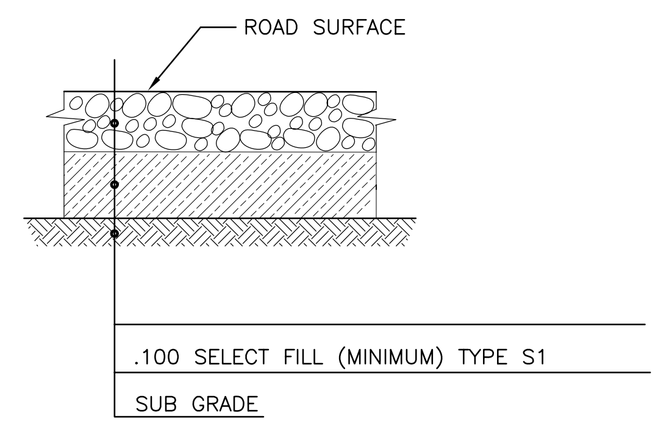

4 C05 GRAVEL ROAD DETAIL (TYP)
SCALE: NTS

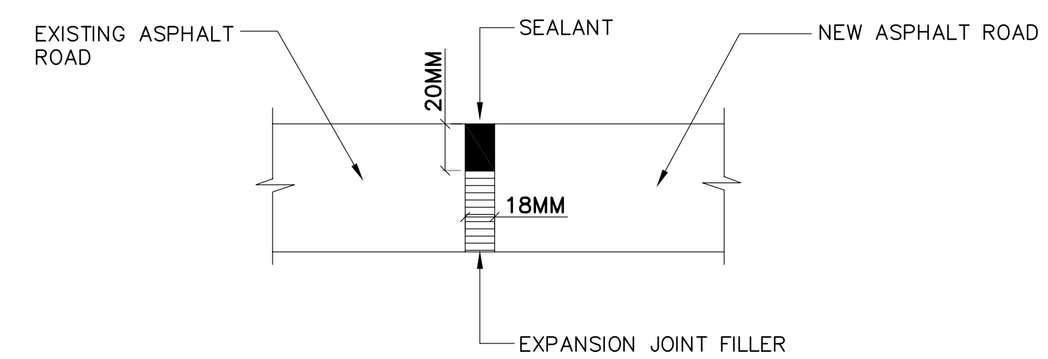

5 C05 INTERFACE OF EXISTING ROAD
SCALE: NTS

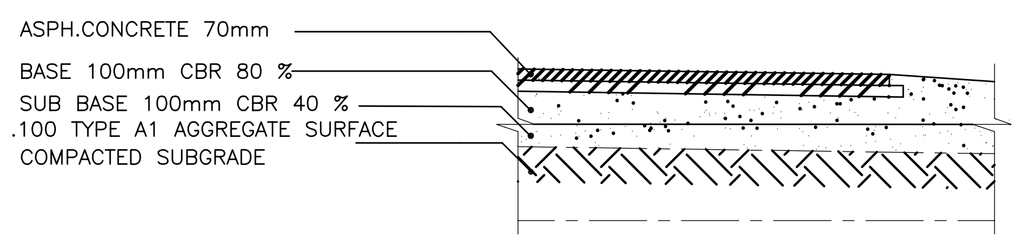

6 C05 ROAD PAVEMENT DETAIL (TYP)
SCALE: NTS

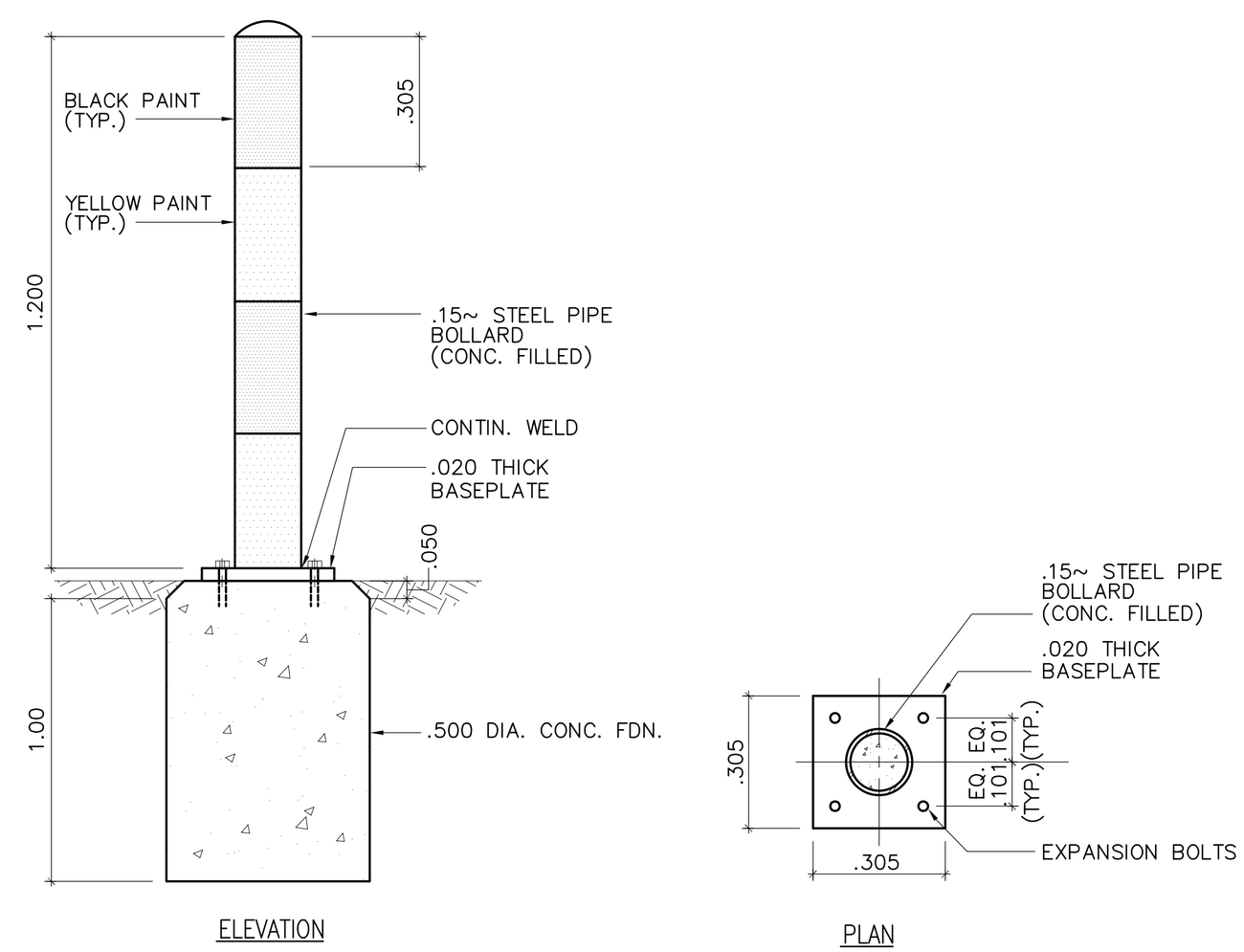

ELEVATION

PLAN

7 C05 BOLLARD DETAIL
SCALE: NTS

AS BUILT

GRAPHIC SCALE:

SEAL:

REV	DESCRIPTIONS	DATE	APPD.

REVISION

INTERNATIONAL BROADCASTING BUREAU
ENGINEERING & TECHNICAL OPERATIONS
WASHINGTON, D.C. 20547

Bader Al Mulla & Bros. Co. W.L.L.
Engineering Group

		DATE
DRAWN	HAK	23/05/04
CHK. BY.	JPB	DATE
ENGR.	JPB	DATE

APPROVALS
PROJ. MANAGER TC

SHORTWAVE EXPANSION PROJECT
SITE ROAD
DETAILS & SECTIONS
KUWAIT

IQC No. XX-XX-XX
TASK No. X
PROJ. No. 03NC080
CAD DESIGN FILE NAME: FILENAME

DWG. No. BMB-AS-C-05 C05
SCALE: AS SHOWN SHEET 1 OF SHT

30 Gateway Drive, Wayne, N.J. 07470 TEL. (973) 785-4545 FAX (973) 785-0766 www.hansonengineers.com
HANSON THALES
675 North Washington St., Alexandria, VA. 22314 TEL. (703) 836-5844 FAX (703) 836-3284 www.thales-bm.com