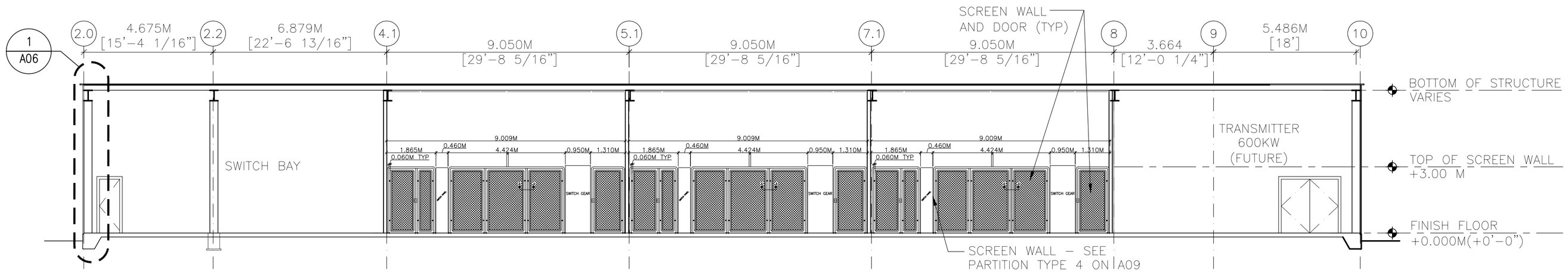

1 A05 SECTION 1:100

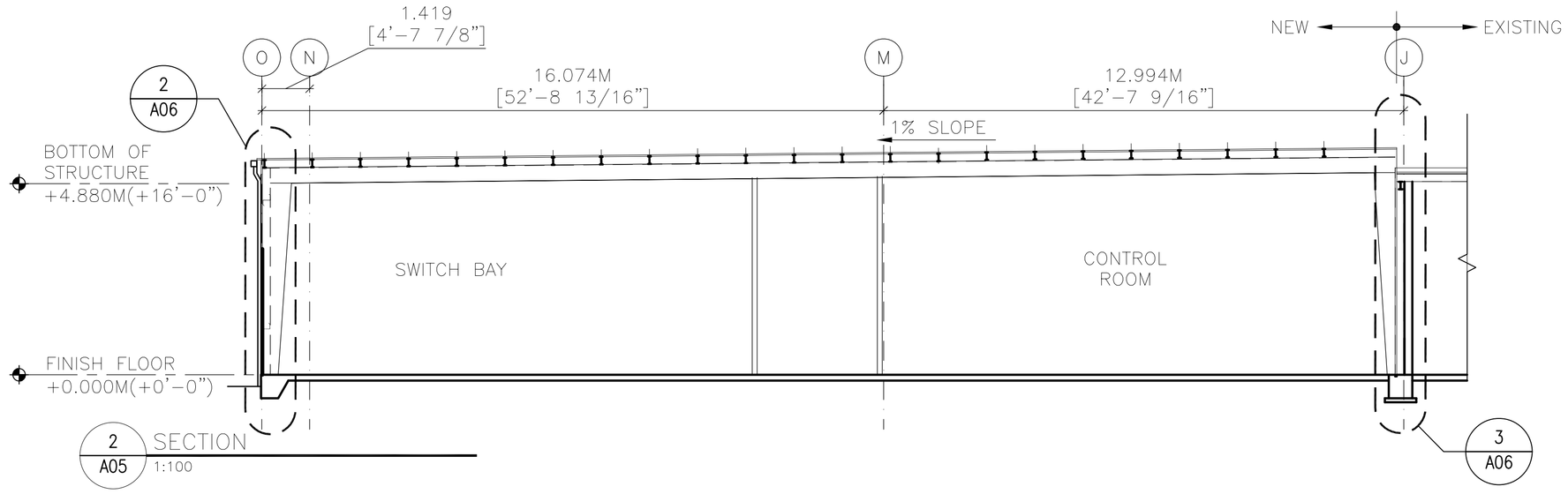

2 A05 SECTION 1:100

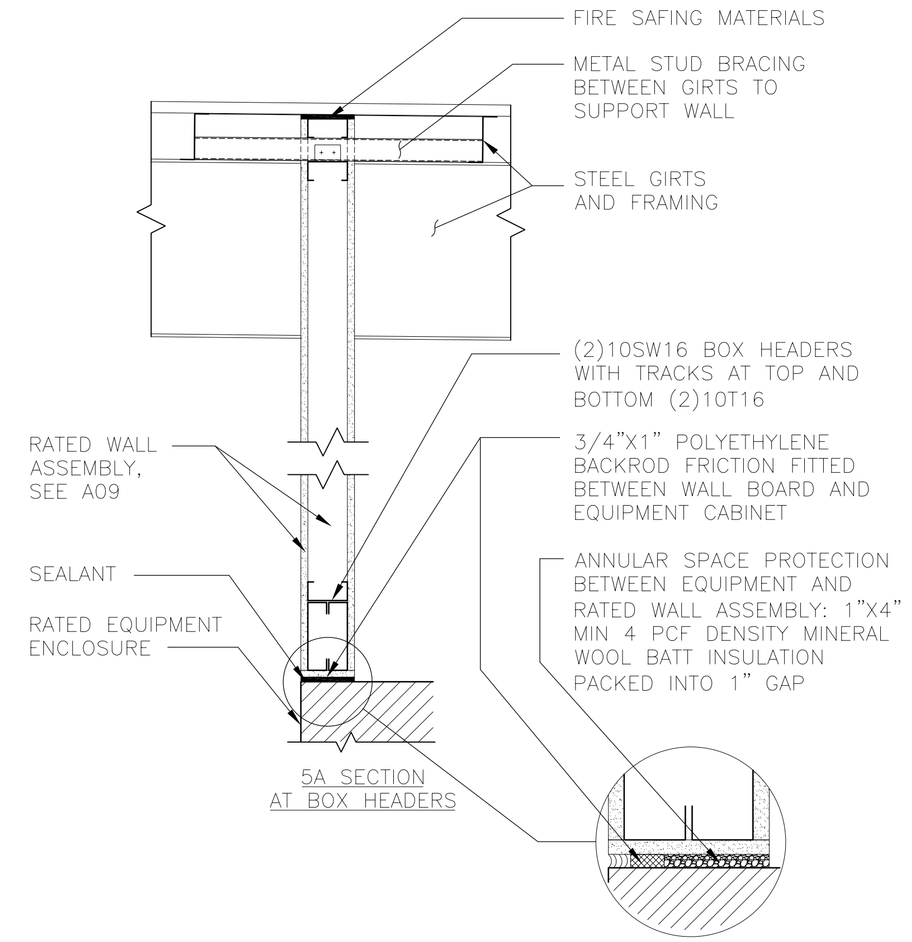

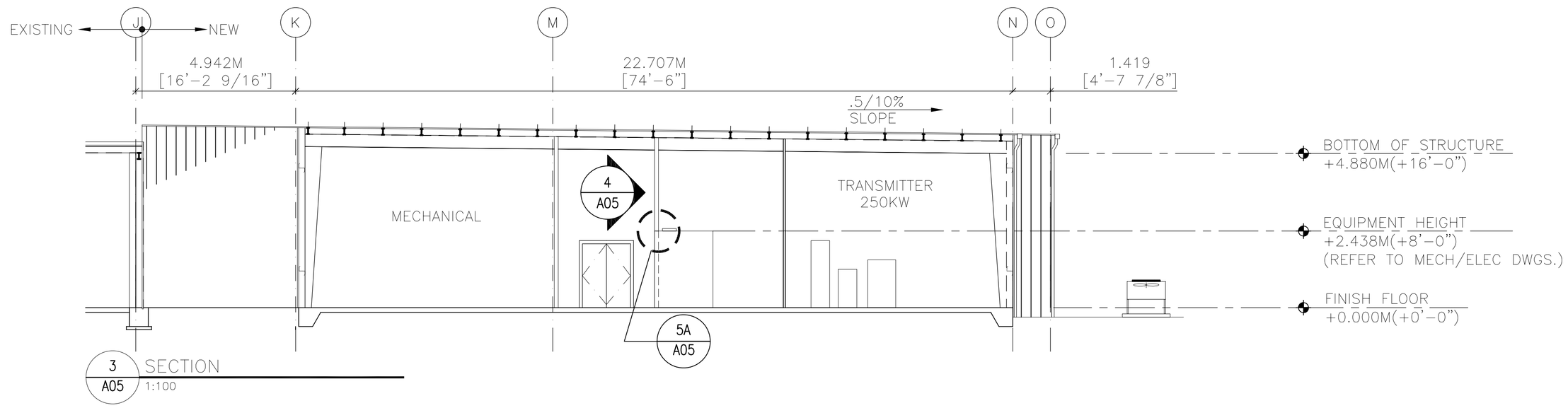

3 A05 SECTION 1:100

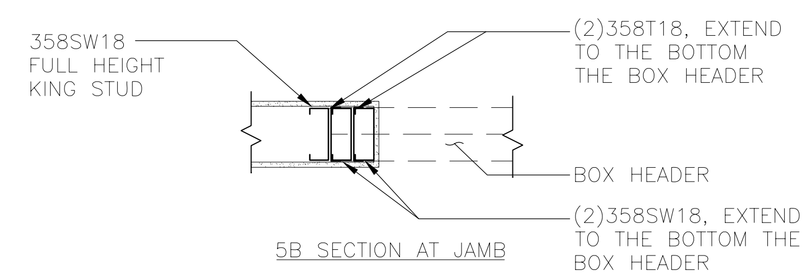

5 A05 DETAIL NTS

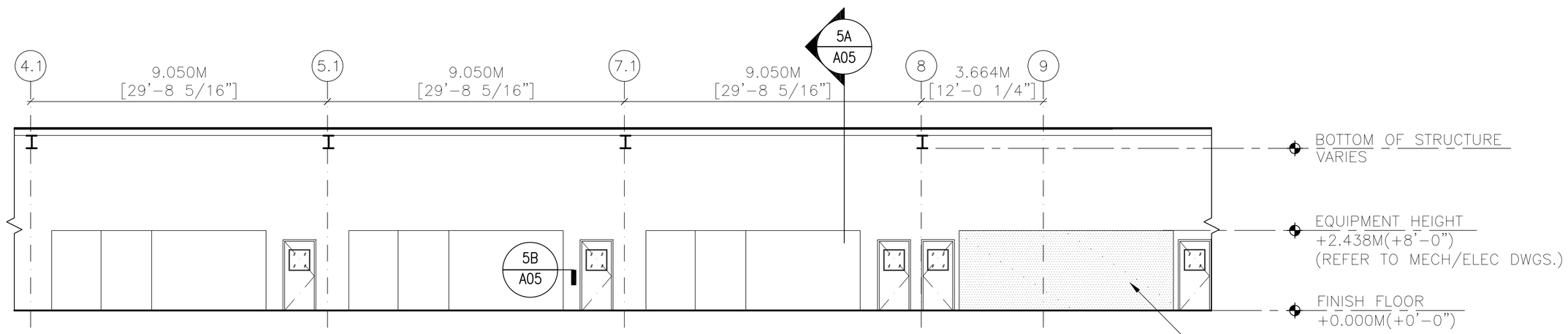

4 A05 INTERIOR ELEVATION 1:100

ASBUILT

GRAPHIC SCALE:
0 1m 2m 5m
SCALE: 1:100 (METRIC)
0 4ft 8ft 16ft
SCALE: .12":1' (ENGLISH)
SCALE FACTOR – 100

SEAL:

REV	DESCRIPTIONS	DATE	APPD.

REVISION

INTERNATIONAL BROADCASTING BUREAU
INTERNATIONAL BROADCASTING BUREAU
ENGINEERING & TECHNICAL OPERATIONS
WASHINGTON, D.C. 20547

Bader AlMulla & Bros. Co. W.L.L
Engineering Group

		DATE
DRAWN	HAK	10/06/04
CHK. BY.	JPB	11/07/04
ENGR.	JPB	11/06/04

APPROVALS
PROJ. MANAGER TC

SHORTWAVE EXPANSION PROJECT
SECTIONS
KUWAIT

IQC No. XX-XX-XX
TASK No. X
PROJ. No. 03NC080

DWG. No. BMB-AS-A-05 A05

SCALE: AS SHOWN

• 50 Great Drive •
Hopkinton, N.J. 07570
• TEL : (973) 759-4646
• FAX : (973) 759-0790
• www.hansonengineers.com
HANSON
THALES
670 North Washington St. •
Alexandria, VA. 22314 •
TEL : (703) 836-0044 •
FAX : (703) 836-3284 •
www.thales-bm.com