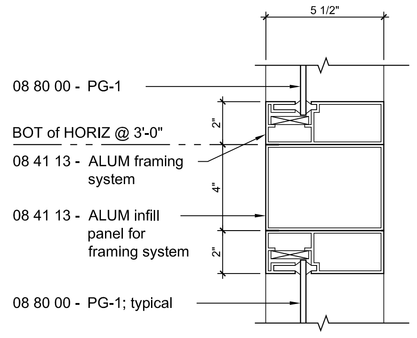

Detail 12
Scale: 3"= 1'-0"

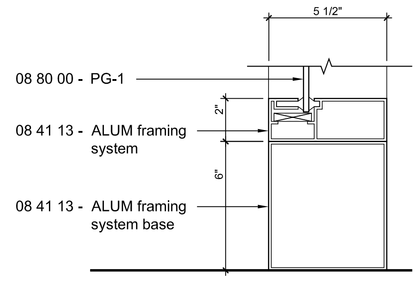

Detail 11
Scale: 3"= 1'-0"

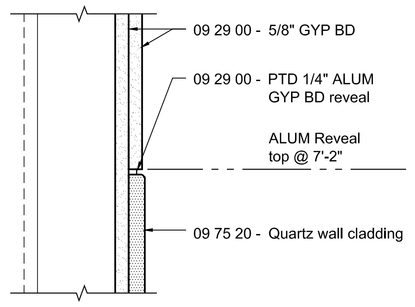

Detail 10
Scale: 3"= 1'-0"

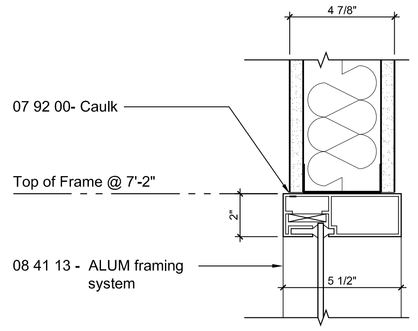

Detail 9
Scale: 3"= 1'-0"

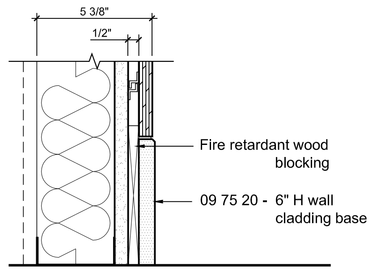

Detail 8
Scale: 3"= 1'-0"

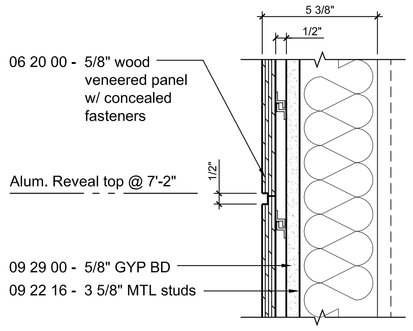

Detail 7
Scale: 3"= 1'-0"

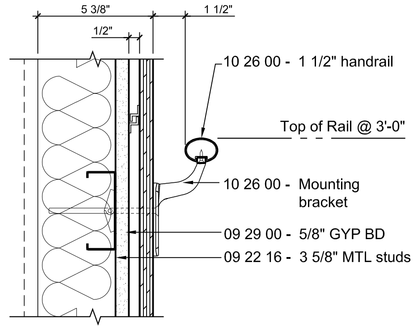

Detail 6
Scale: 3"= 1'-0"

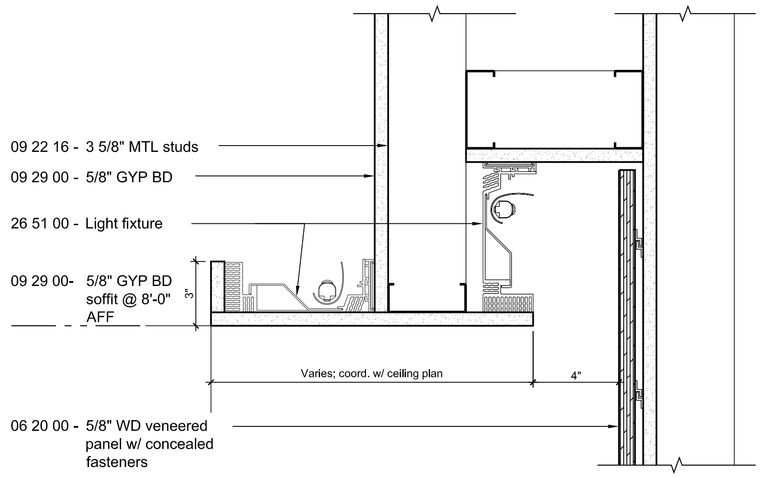

Detail 5
3" = 1'-0"

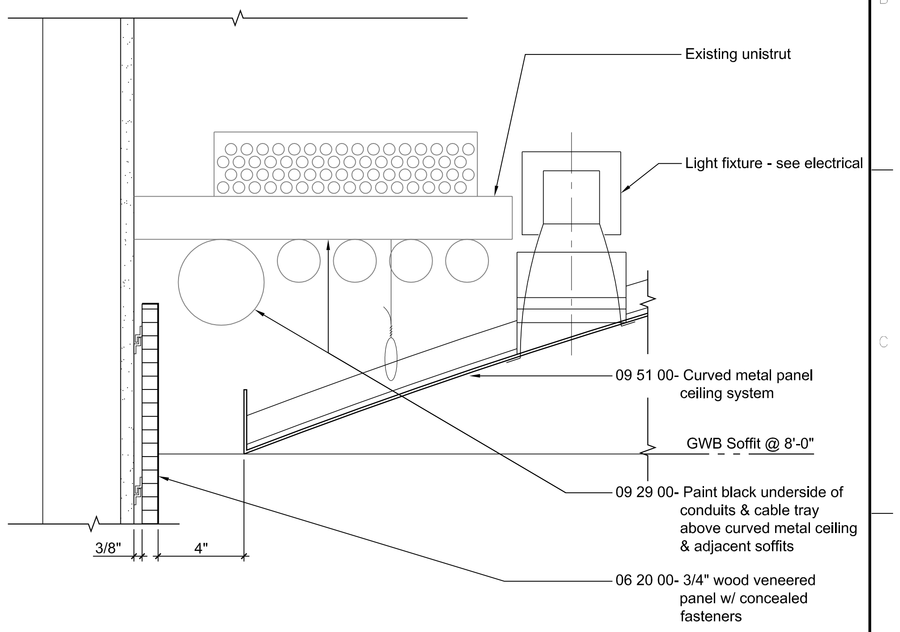

Detail at Recessed Lighting 4
3" = 1'-0"

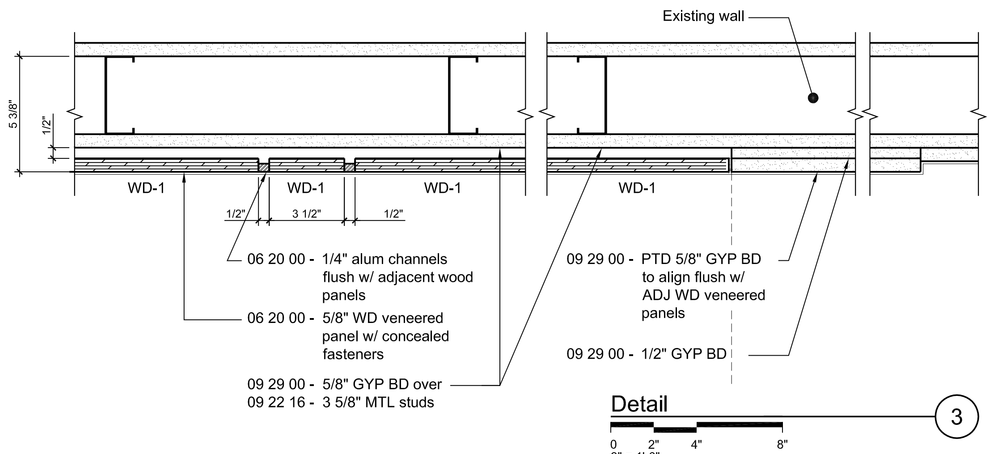

Detail 3
3" = 1'-0"

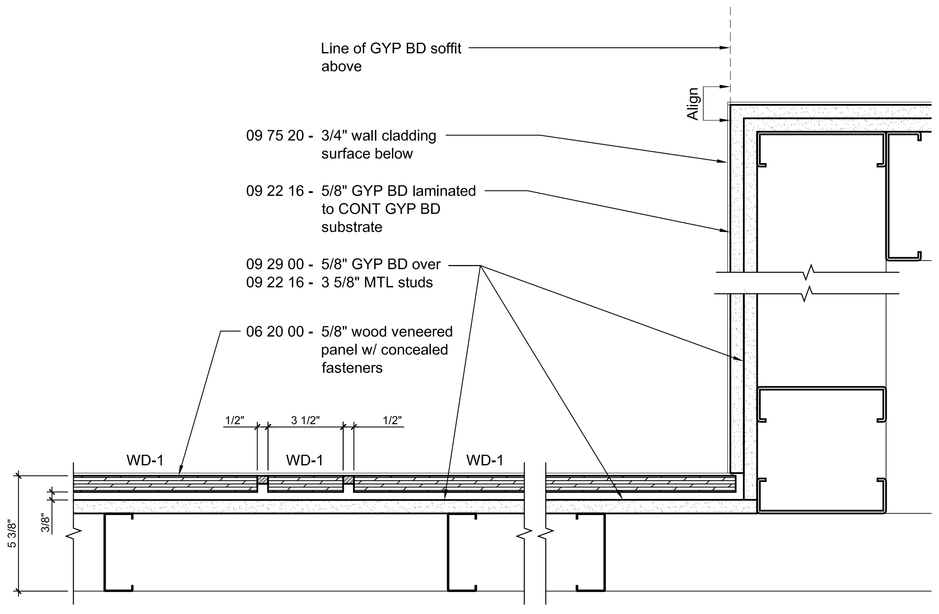

Detail 2
3" = 1'-0"

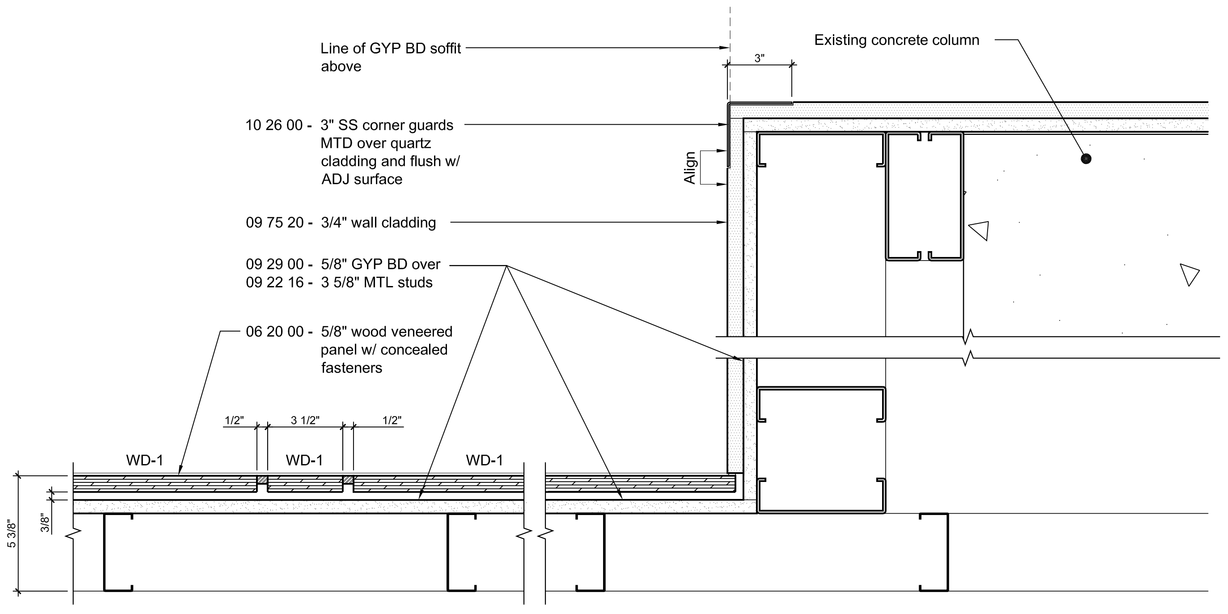

Detail 1
3" = 1'-0"

BID ISSUE	05-16-08
Revisions:	**Date**

CONSULTANTS:

FREDRICK, FREDRICK & HELLER ENGINEERS, INC.
672 EAST ROYALTON ROAD
BROADVIEW HTS., OHIO 44147
TEL. (440) 546-9696
FAX: (440) 546-9699

STATE OF OHIO
WILLIAM C. AYARS
7259
REGISTERED ARCHITECT

ARCHITECT:

Perspectus architecture
13212 Shaker Square Suite 204 Cleveland, Ohio 44120
P. 216.752.1800 F.216.752.3833

DESIGN AND CONSTRUCTION DOCUMENTS AS INSTRUMENTS OF SERVICE ARE GIVEN IN CONFIDENCE AND REMAIN THE PROPERITY OF PERSPECTUS ARCHITECTURE. THE USE OF THIS DESIGN AND THESE CONSTRUCTION DOCUMENTS FOR PURPOSES OTHER THAN THE SPECIFIC PROJECT CONTRACTED FOR IS STRICTLY PROHIBITED WITHOUT THE EXPRESSED WRITTEN CONSENT OF PERSPECTUS ARCHITECTURE.

Drawing Title: **MAIN STREET DETAILS**

Approved: Project Director

Project Title: **PROSTHETICS RENOVATIONS**

Location: **VAMC - WADE PARK**

Date: 03-12-08 | Checked: **TEH** | Drawn: **TKT**

Project Number: 541-05-1071

Building Number: 1

Drawing Number: **1-11**

Dwg. of

Office of Facilities Management

Department of Veterans Affairs