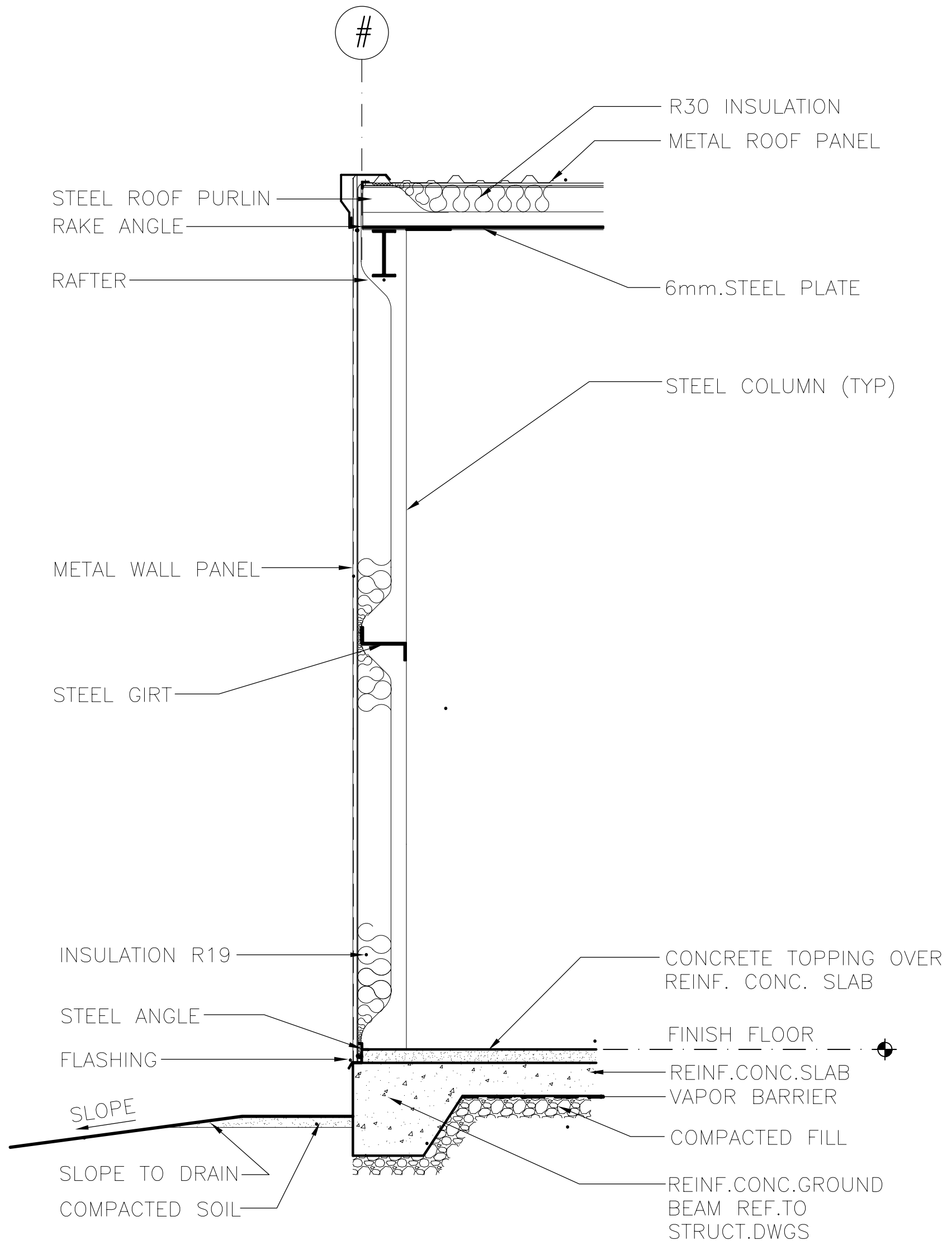

1 A06 WALL SECTION
NTS

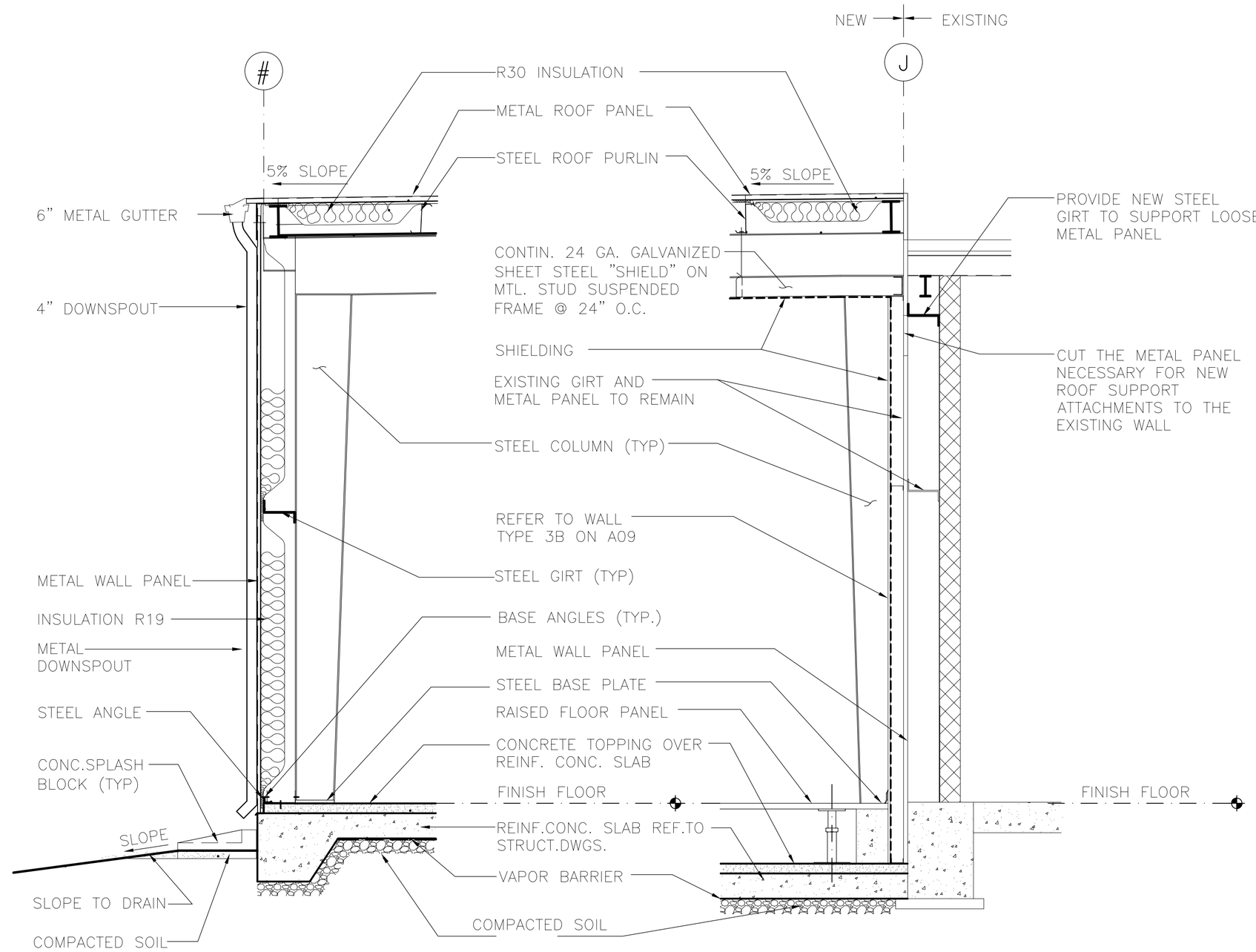

2 A06 WALL SECTION
NTS

3 A06 WALL SECTION
NTS

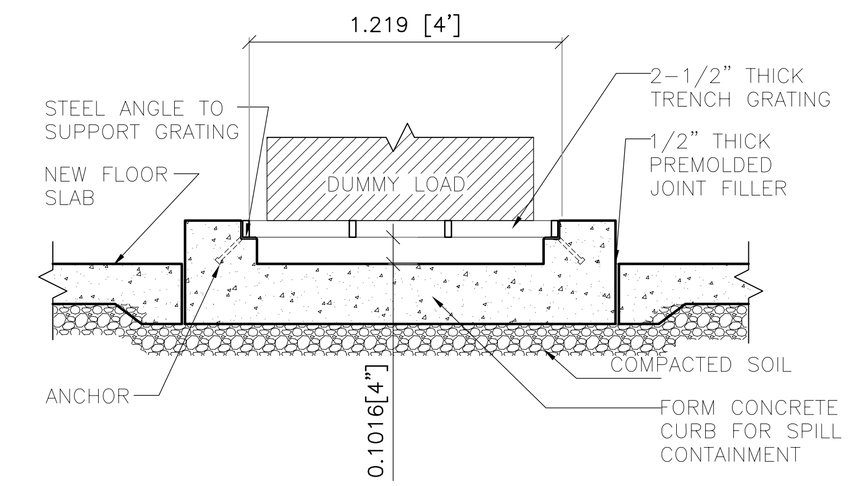

4 A06 GRATING OVER CURB DETAIL
NTS

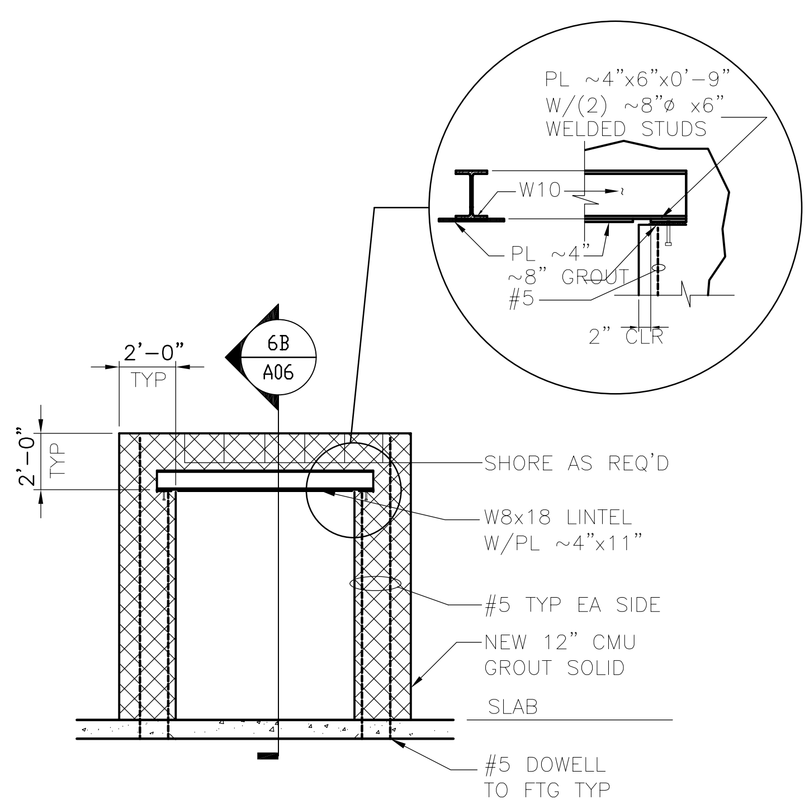

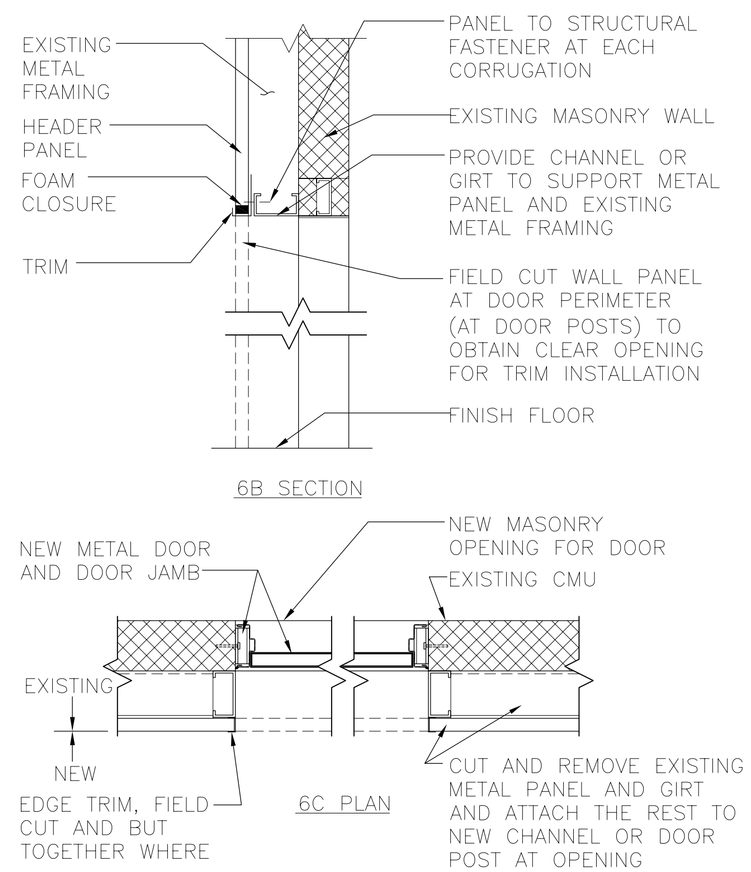

5 A06 NEW DOOR OPENING IN EXISTING MASONRY WALL (TYP)
NTS

NOTE: FOR DOOR 13, SEE WALL TYPE 3B ON A09 FOR GYPSUM BOARD FINISH.

ASBUILT

GRAPHIC SCALE:

SEAL:

REV	DESCRIPTIONS	DATE	APPD.
	REVISION		

INTERNATIONAL BROADCASTING BUREAU
ENGINEERING & TECHNICAL OPERATIONS
WASHINGTON, D.C. 20547

Bader AlMulla & Bros. Co. W.L.L
Engineering Group

		DATE
DRAWN	HAK	10/06/04
CHK. BY.	JPB	11/06/04
ENGR.	JPB	11/06/04
APPROVALS		
PROJ. MANAGER	TC	

SHORTWAVE EXPANSION PROJECT
WALL SECTION
KUWAIT

IQC No.	XX-XX-XX
TASK No.	X
PROJ. No.	03NC080

DWG. No. BMB-AS-A-06 — A06

SCALE: AS SHOWN

• 30 Galesi Drive, Wayne, N.J. 07470 • TEL • (973) 785-4545 • FAX • (973) 785-0786 • www.hansonengineers.com
HANSON
THALES
676 North Washington St., Alexandria, VA. 22314 • TEL • (703) 836-5644 • FAX • (703) 836-3264 • www.thales-tec.com