NPS NO.	REG	STATE	PROJECT	SHEET NO.	TOTAL SHEETS
601 / 43918	SE	NC	PRA-BLRI-2P14	1	166

U.S. DEPARTMENT OF THE INTERIOR

NATIONAL PARK SERVICE

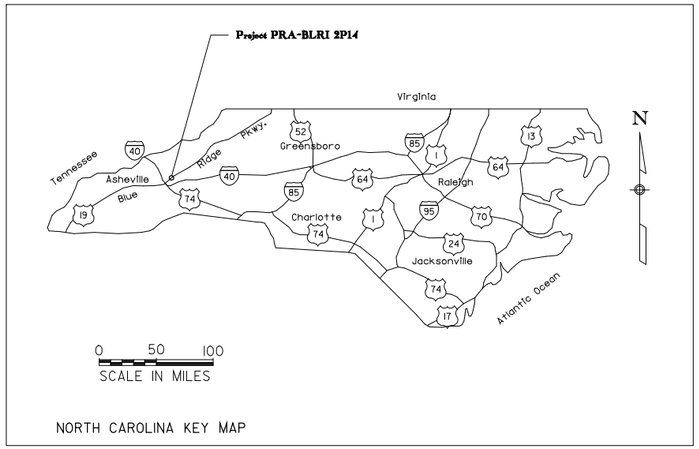

NORTH CAROLINA KEY MAP

BLUE RIDGE PARKWAY

PLANS FOR PROPOSED

PROJECT PRA-BLRI 2P14

RESURFACING AND REHABILITATING THE PARKWAY, PULL-OFFS AND PARKING AREAS, MILLING AND OVERLAY, FULL-DEPTH PAVEMENT RECLAMATION AND OTHER WORK. FROM MP 359.7 TO MP 375.1

YANCEY & BUNCOMBE COUNTIES
NORTH CAROLINA

INDEX TO SHEETS

SHEET NO	SHEETS
1	TITLE SHEET
2	VICINITY MAP
3	CONVENTIONAL SYMBOLS AND ABBREVIATIONS
4-11	TYPICAL SECTIONS
12-20	TABULATION OF QUANTITIES
21	AGGREGATE TOPSOIL SCHEDULES
22	EROSION CONTROL SCHEDULES
23-24	PAVING SUMMARIES
25	PAVEMENT PATCH SUMMARIES
26	PAVEMENT MARKING SUMMARIES
27	RIPRAP AND GEOTEXTILE FABRIC SUMMARIES
28	WATERWAYS SUMMARY
29	SIDEWALK, RAMP, WHEELSTOP, AND CURB SUMMARIES
30-36	DRAINAGE SUMMARY
37-38	CONSTRUCTION SIGN SCHEDULE
39-76	PLAN SHEETS
77-81	TRAFFIC CONTROL SHEETS
82	EROSION AND SEDIMENT CONTROL NARRATIVE
83-112	PERMANENT STRIPING PLAN SHEETS
113-122	PAVEMENT REHABILITATION DETAILS
123-125	CRAGGY DOME RETAINING WALL REPAIR PLANS & DETAILS
126	CRAGGY GARDENS SLIDE REPAIR PLANS DETAILS
127-166	STANDARDS AND DETAILS

DESCRIPTION OF PROJECT

IMPROVEMENT: RESURFACING AND REHABILITATING THE PARKWAY, PULL-OFFS, AND PARKING AREAS, MILLING AND OVERLAY, FULL-DEPTH PAVEMENT RECLAMATION AND OTHER WORK

	WIDTH	TYPE
PARKWAY SURFACE:	20'	Asphalt Concrete, Superpave
PARKWAY BASE:	22'	Aggregate Base
ACCESS ROAD SURFACE:	16'-20'	Asphalt Concrete, Superpave
ACCESS ROAD BASE:	18'-22'	Aggregate Base

DESIGN DESIGNATION

Parkway		Access Road	
ADT(2003)	1433	ADT(2003)	333
ADT(2023)	2136	ADT(2023)	496
DHV	214	DHV	N/A
D	50/50	D	50/50
V	50 MPH	V	Not Posted
C/A	Full	C/A	Full

SPECIFICATIONS:

"Standard Specifications for Construction of Roads and Bridges on Federal Highway Projects", FP-96 (English)

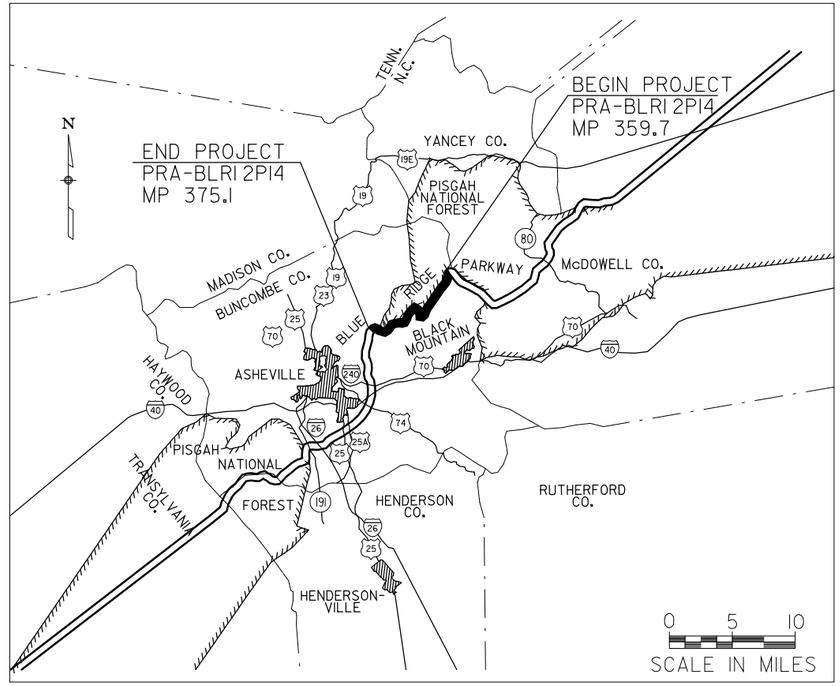

PROJECT LENGTH

PARKWAY	15.4 MILES
PICNIC ACCESS ROAD	1.1 MILES
TOTAL	16.5 MILES

PLANS PREPARED BY

U.S. DEPARTMENT OF TRANSPORTATION
FEDERAL HIGHWAY ADMINISTRATION
EASTERN FEDERAL LANDS HIGHWAY DIVISION
STERLING, VIRGINIA

July 2008

ARCADIS
1210 Premier Drive, Suite 200
Chattanooga, TN 37421
Tel: (423) 756-7193 Fax: (423) 756-7197

Project Manager	Designer
Brian Whitaker	Clint Butler

Package No.	PMIS No.
503F	54310

8:36:37 AM G:\tra\CT052885\TRAFINAL_MOD_TYtitle.dgn

NPS NO.	REG	STATE	PROJECT	SHEET NO.	TOTAL SHEETS
601 / 43918	SE	NC	PRA-BLRI-2P14	2	166

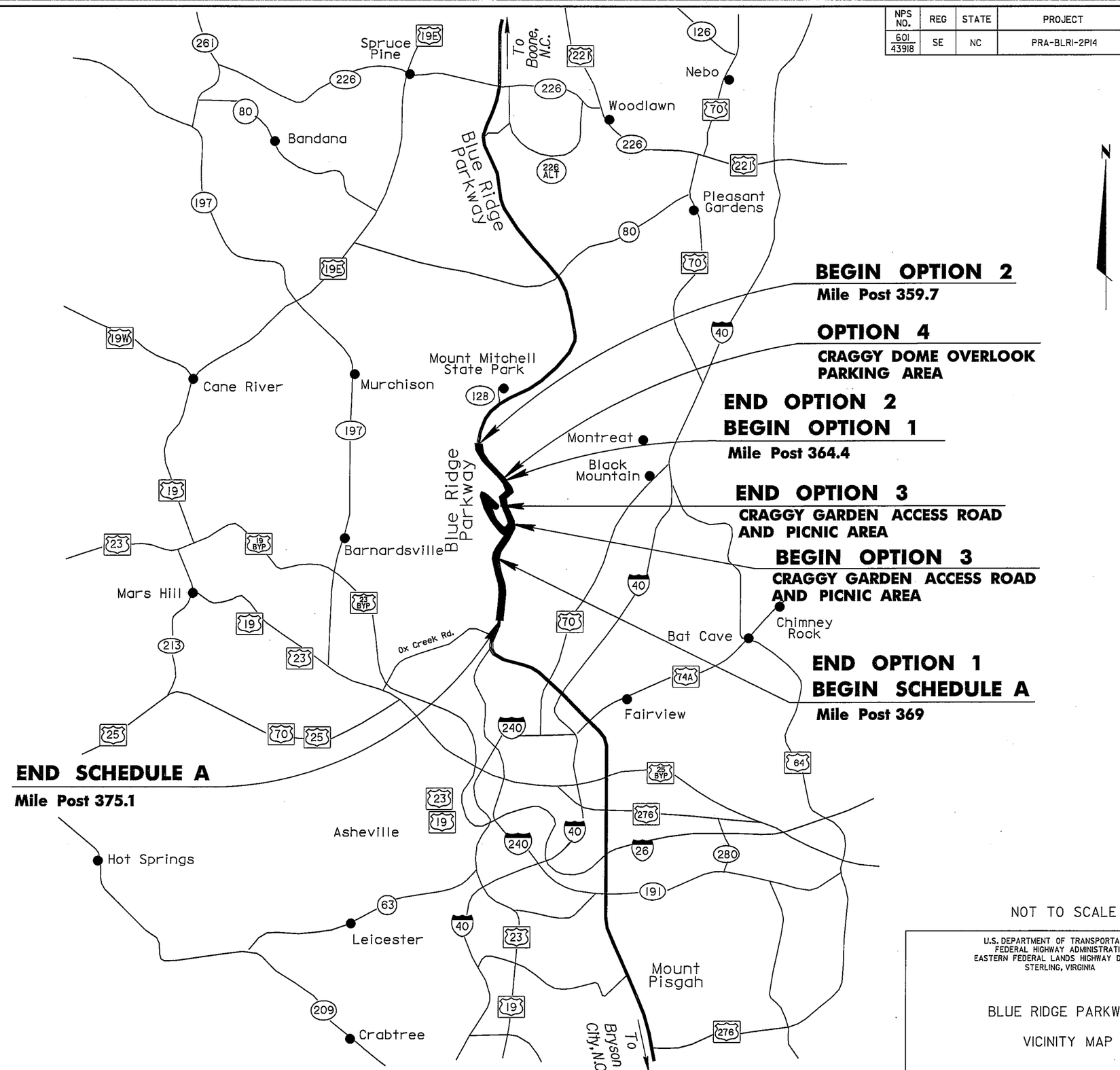

NOT TO SCALE

U.S. DEPARTMENT OF TRANSPORTATION
FEDERAL HIGHWAY ADMINISTRATION
EASTERN FEDERAL LANDS HIGHWAY DIVISION
STERLING, VIRGINIA

BLUE RIDGE PARKWAY

VICINITY MAP

7/10/2008 11:09:04 AM G:\tra\CT052885\TRA\FINAL_MOD_7\vicinity map.dgn

NPS NO.	REG	STATE	PROJECT	SHEET NO.	TOTAL SHEETS
601 / 43918	SE	NC	PRA-BLRI-2P14	3	166

	EXISTING	PROPOSED
POLE	⌀PP	●
FIRE HYDRANT		
MANHOLE	◎	
WATER VALVE		
POWER POLE with UTILITY LINE	—o — P— —	—— P ——●——
TELEPHONE POLE with UTILITY LINE	—o — T— —	—— T ——●——
JOINT USE POLE with UTILITY LINES	—o — P&T—	—— P&T —●——
SUPPORT POLE with ANCHOR		
TELEPHONE BOOTH or PEDESTAL		
UNDERGROUND UTILITIES G = gas; E = electric; O = oil; S = sanitary sewer; T = telephone; W = water;	— · ꟾW⊢— · —	—··—ꟾW⊢··—
TREE or BRUSH LINE		No Symbol
GATE		
CULVERT with DROP INLET		
BUILDING		
COORDINATE GRID TICK	+	No Symbol
SPOT ELEVATION	x99.9	No Symbol
BORING LOCATION		No Symbol
SIGN SUPPORTS		
PORTABLE	No Symbol	
POST MOUNTED (Single/Double)		
SIGNS (ROUTE MARKERS)		
INTERSTATE HIGHWAY	95	
U. S. ROUTE	64	
STATE HIGHWAY	12	
CONTROL POINT		NO SYMBOL
TRAIL HEAD MARKER	☒	NO SYMBOL
GUARD RAIL		
Road Reconstruction		
Full Depth Reclamation		
Asphalt Pavement Milling and Overlay		
New Asphalt Concrete Sidewalk		

	EXISTING	PROPOSED
STONE MASONRY WALL		
FENCE		
CHAIN LINK, WIRE, OR WOOD (TEMPORARY OR PERMANENT)	— X —	— X X —
CONSTRUCTION FENCE		— CF —
SILT FENCE		— SF —
CHECK DAM		Cd
CONSTRUCTION LIMITS		
TOP OF CUT		
TOE OF FILL		
TRANSITION		

BLDG	Building
℄	Center Line
CMP	Corrugated Metal Pipe
CO	Commanding Officer
Constr.	Construction
CP	Control Point
D	Curve Degree
DET.	Detail
e	Super Elevation
E	Electric
Elev.	Elevation
G	Gas
IPS	Iron Pin Set
INV.	Invert Elevation
L	Length Of Curve
LT	Left
max.	Maximum
M-ESAL	Million Equivalent Single Axle Loads
MH	Manhole
min.	Minimum
Mon.	Monument
N/R	Nail And Ribbon
NMSA	Nominal Maximum Size Aggregate
No.	Number
O.C.	On Center
PC	Point Of Curve
PCC	Portland Cement Concrete
PI	Point Of Intersection
POC	Point On Curve
POT	Point On Tangent
PT	Point Of Tangent
R	Radius
RCP	Reinforced Concrete Pipe
RPCC	Reinforced Portland Cement Concrete
RT	Right
S	Sewer
SACP	Superpave Asphalt Concrete Pavement
STD.	Standard
T	Telephone / Curve Tangent
TBM	Temporary Bench Mark
Typ.	Typical
VC	Vertical Curve
W	Water
△	CURVE DEFLECTION

U.S. DEPARTMENT OF TRANSPORTATION
FEDERAL HIGHWAY ADMINISTRATION
EASTERN FEDERAL LANDS HIGHWAY DIVISION
STERLING, VIRGINIA

BLUE RIDGE PARKWAY

CONVENTIONAL SYMBOLS AND ABBREVIATIONS

NPS NO.	REG	STATE	PROJECT	SHEET NO.	TOTAL SHEETS
601 / 43918	SE	NC	PRA-BLRI-2P14	4	166

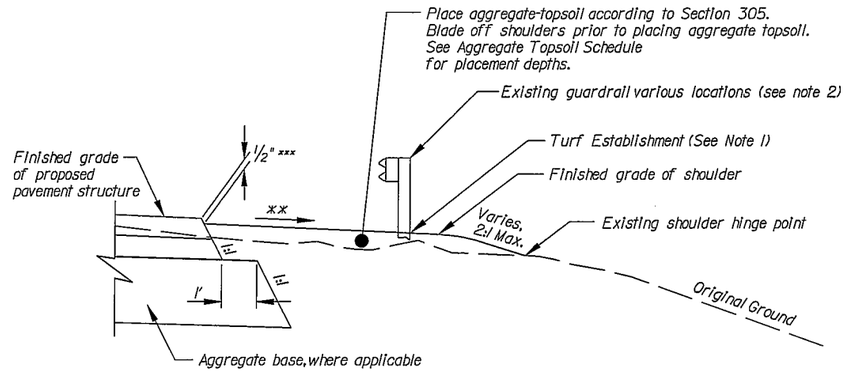

SHOULDER TYPICAL SECTION

NOTES:

1. Apply turf establishment to all unpaved, disturbed areas and reconditioned shoulders according to Section 625.

2. Reduce Aggregate topsoil thickness to 2-inches at the face of guardrail, as directed by CO.

** Use 6% cross-slope for shoulder unless it exceeds 8% algebraic difference in the cross-slope roll-over from pavement to shoulder, then adjust cross-slope accordingly.

*** Construct shoulder flush with sidewalk on all pull-off and parking areas.

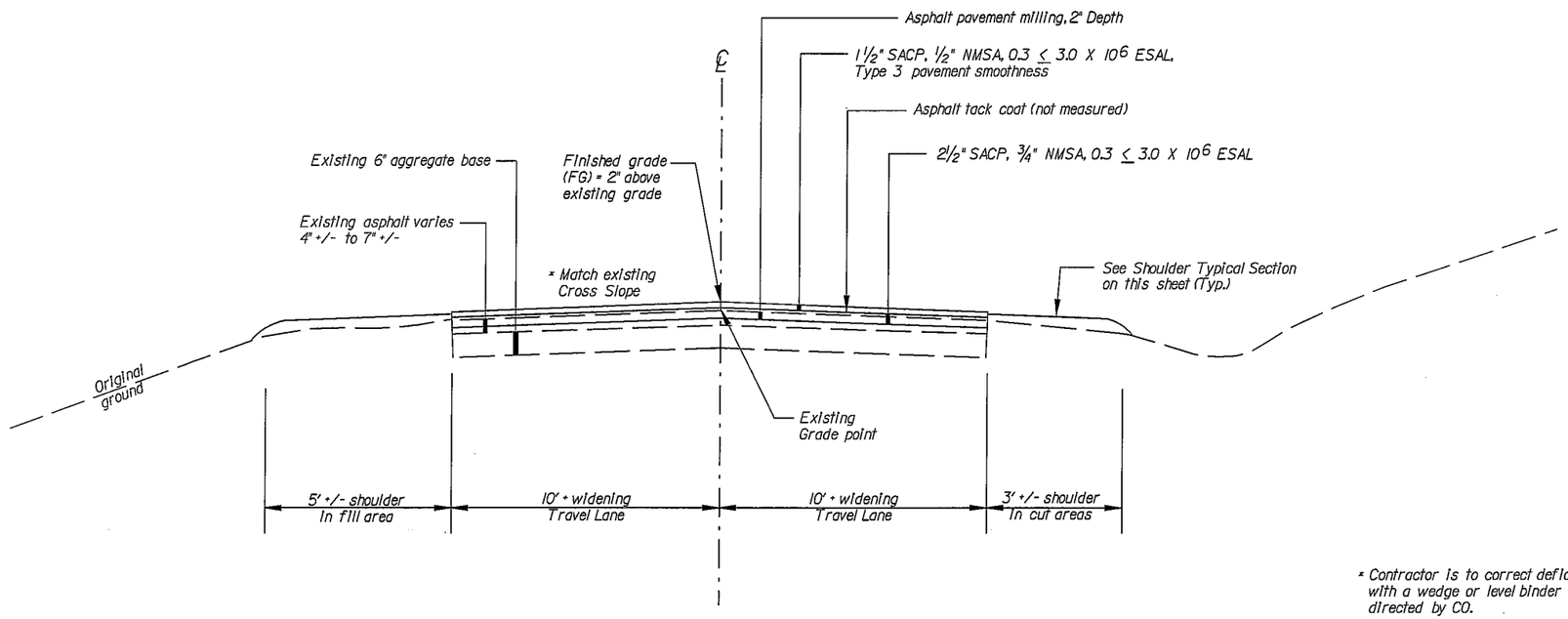

* Contractor is to correct deficient cross-slopes with a wedge or level binder and surface course as directed by CO.

MILLING AND OVERLAY

Blue Ridge Parkway MP 359 Sta. 39+00 to MP 361 Sta. 39+75
Blue Ridge Parkway MP 361 Sta. 41+55 to MP 362 Sta. 40+85
Blue Ridge Parkway MP 362 Sta. 42+30 to MP 363 Sta. 21+15
Blue Ridge Parkway MP 363 Sta. 22+65 to MP 365 Sta. 27+79
Blue Ridge Parkway MP 365 Sta. 33+83 to MP 366 Sta. 24+10
Blue Ridge Parkway MP 368 Sta. 20+00 to MP 370 Sta. 2+00

U.S. DEPARTMENT OF TRANSPORTATION
FEDERAL HIGHWAY ADMINISTRATION
EASTERN FEDERAL LANDS HIGHWAY DIVISION
STERLING, VIRGINIA

BLUE RIDGE PARKWAY

TYPICAL SECTIONS

Drawing No. 1 of 8

7/11/2008 10:08:37 AM G:\tro\CT05288S\TRAVFINAL_MOD_7\typ_sections.dgn

NPS NO.	REG	STATE	PROJECT	SHEET NO.	TOTAL SHEETS
601 / 43918	SE	NC	PRA-BLRI-2P14	5	166

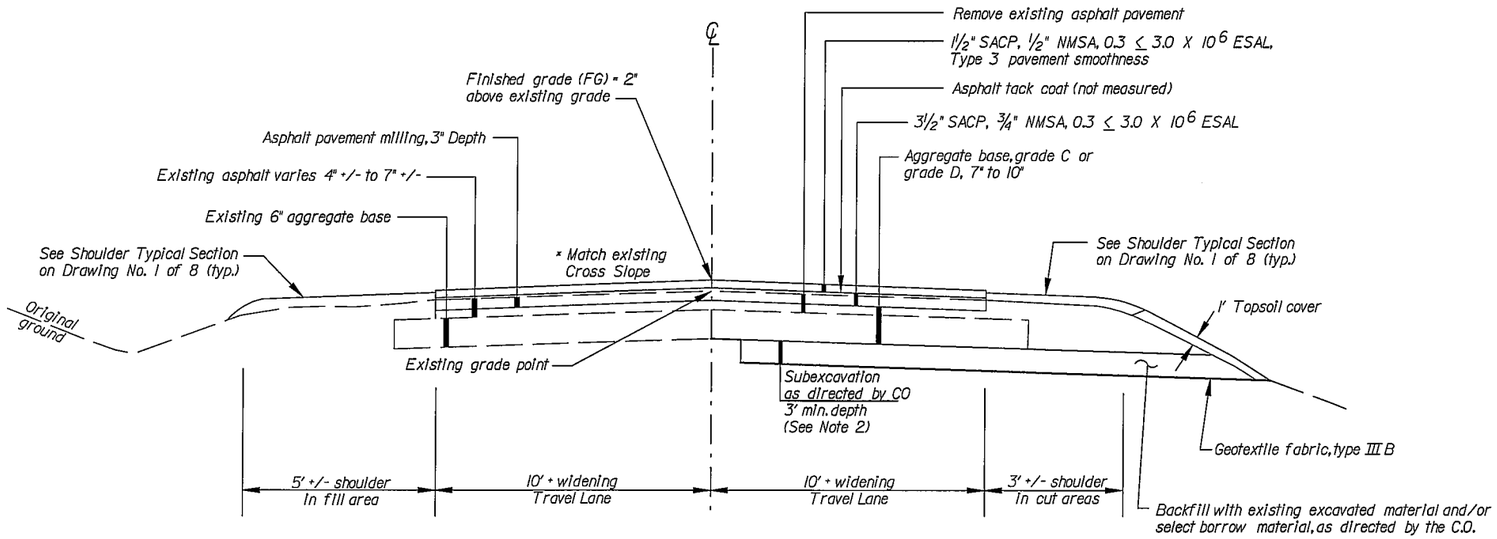

MILL AND OVERLAY

PAVEMENT RECONSTRUCTION

BLUE RIDGE PARKWAY

** MP 361 Sta. 39+75 to MP 361 Sta. 41+55
** MP 362 Sta. 40+85 to MP 362 Sta. 42+30
MP 363 Sta. 21+15 to MP 363 Sta. 22+65

NOTES:

1. Apply turf establishment to all unpaved, disturbed areas and reconditioned shoulders according to Section 625.
2. Excavate additional subgrade as directed by CO. Reconstruct using existing excavated material and/or select borrow as directed by CO. Place one layer of geogrid for each additional 18" subexcavation required beyond minimum depth.
3. Install wedge or level courses after milling of existing pavement, as directed by the CO.
4. Apply turf establishment to all unpaved, disturbed areas and reconditioned shoulders according to Section 625.
5. Spread, roll and compact additional aggregate on existing aggregate in order to reestablish a smooth aggregate base as directed by CO prior to placement of asphalt. (See Section 152 for re-establishment of roadway pavement grades)

* Match existing cross slope, except as directed by CO.

** Remove and reset guardrail at these locations, as directed by the CO. (See Section 617).

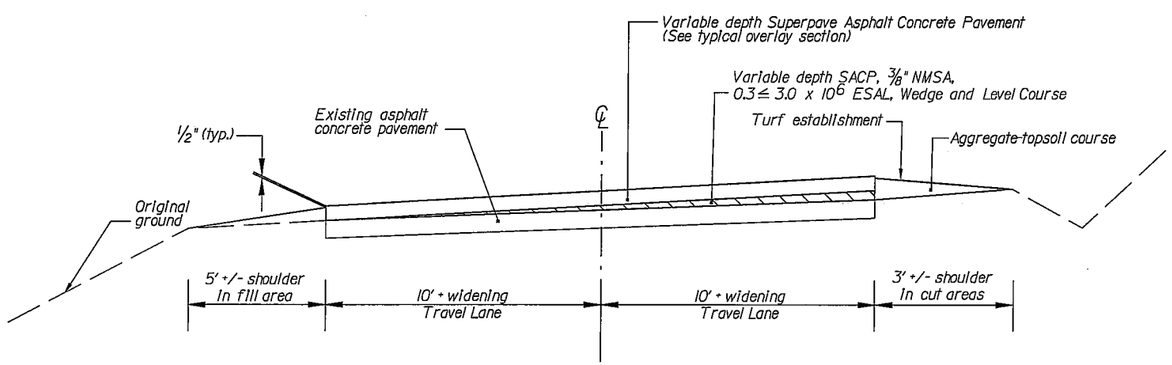

PROPOSED WEDGE OR LEVEL SECTION

NOTES:

1. Construct wedging and leveling to correct deficiencies in the profile and cross slope. Install wedge or level courses after milling of existing pavement, as directed by C.O.
2. Provide nominal maximum aggregate size to match overlay type.

U.S. DEPARTMENT OF TRANSPORTATION
FEDERAL HIGHWAY ADMINISTRATION
EASTERN FEDERAL LANDS HIGHWAY DIVISION
STERLING, VIRGINIA

BLUE RIDGE PARKWAY

TYPICAL SECTIONS

Drawing No. 2 of 8

7/10/2008 11:10:28 AM G:\tra\CT052885\TRA\FINAL_MOD_7\typ_sections.dgn

NPS NO.	REG	STATE	PROJECT	SHEET NO.	TOTAL SHEETS
601 / 43918	SE	NC	PRA-BLRI-2P14	6	166

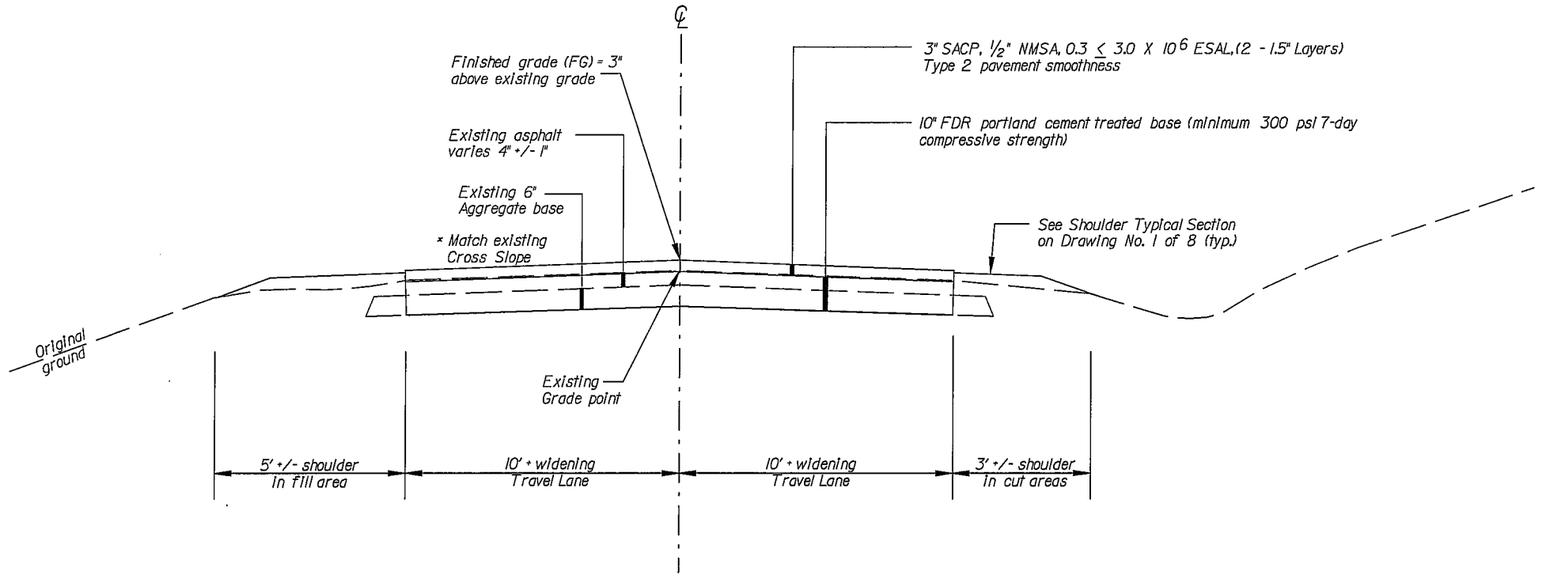

FULL DEPTH RECLAMATION (FDR)

Blue Ridge Parkway MP 366 Sta.24+10 to MP 368 Sta.20+00
Blue Ridge Parkway MP 370 Sta.2+00 to MP 372 Sta.51+00
Blue Ridge Parkway MP 373 Sta.1+00 to MP 374 Sta.20+37
Blue Ridge Parkway MP 374 Sta.30+01 to MP 374 Sta.51+00
Blue Ridge Parkway MP 375 Sta.2+00 to MP 375 Sta.4+56

NOTE:

1. Apply turf establishment to all unpaved, disturbed areas and reconditioned shoulders according to Section 625.

* Match existing cross slope except as directed by CO.

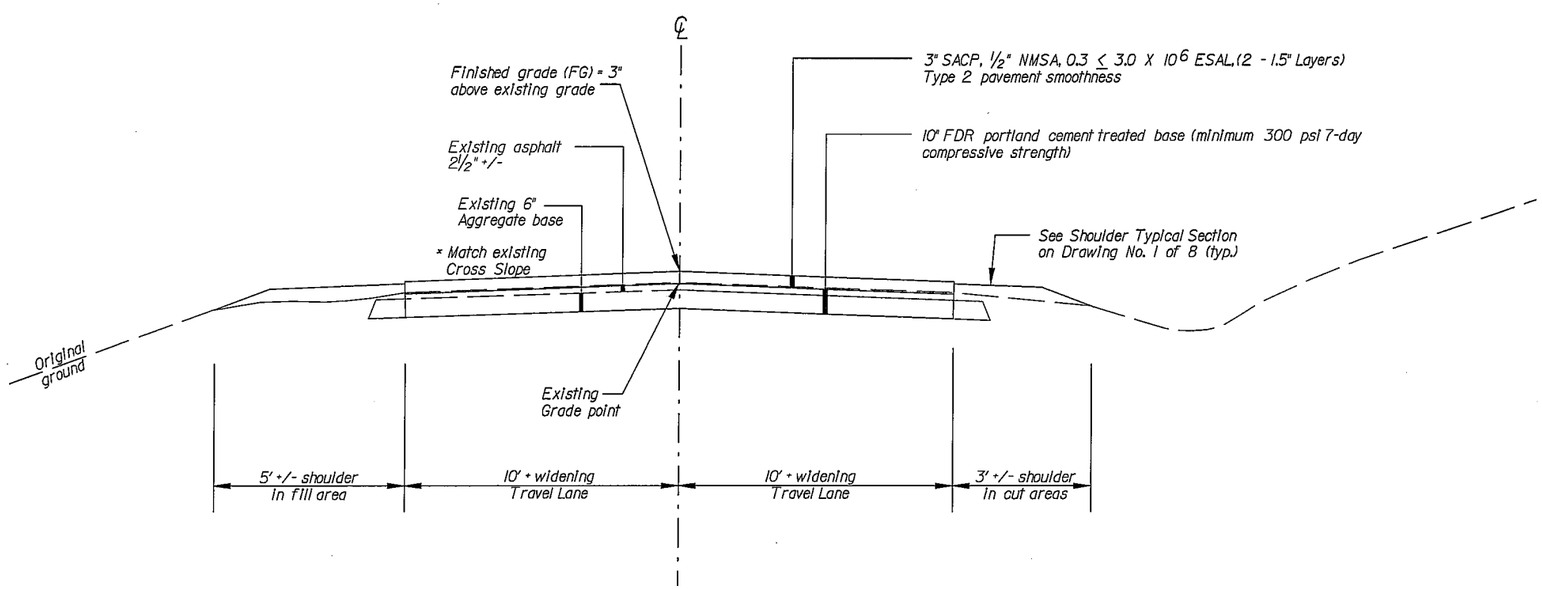

FULL DEPTH RECLAMATION (FDR)

Blue Ridge Parkway MP 372 Sta.51+00 - MP 373 Sta.1+00
Blue Ridge Parkway MP 374 Sta.51+00 - MP 375 Sta.2+00

U.S. DEPARTMENT OF TRANSPORTATION
FEDERAL HIGHWAY ADMINISTRATION
EASTERN FEDERAL LANDS HIGHWAY DIVISION
STERLING, VIRGINIA

BLUE RIDGE PARKWAY

TYPICAL SECTIONS

Drawing No. 3 of 8

7/11/2008 11:27:04 AM G:\tro\CT052885\TRA\FINAL_MOD_7\typ_sections.dgn

NPS NO.	REG	STATE	PROJECT	SHEET NO.	TOTAL SHEETS
601 / 43918	SE	NC	PRA-BLRI-2P14	7	166

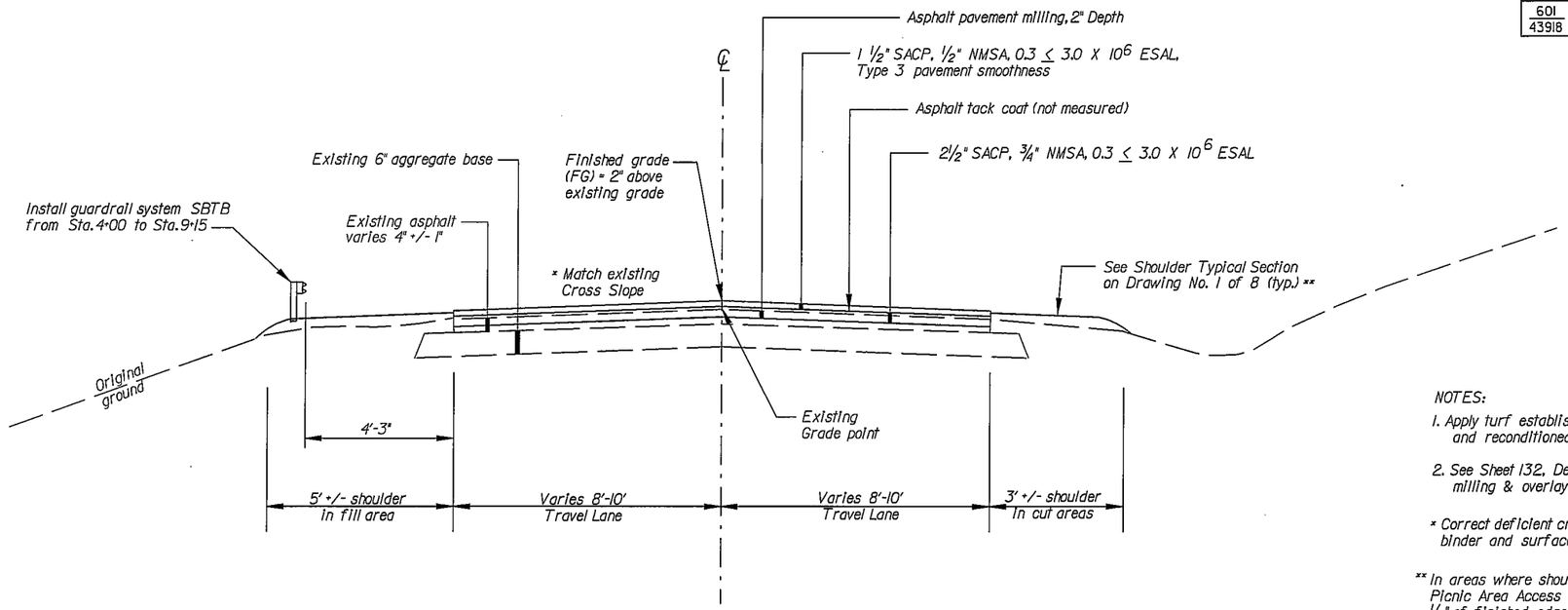

MILLING AND OVERLAY

Craggy Garden's Picnic Area Access Road
Sta. 0+11 - Sta. 19+85
Sta. 20+50 - Sta. 24+00
Sta. 28+50 - Sta. 60+22

NOTES:

1. Apply turf establishment to all unpaved, disturbed areas and reconditioned shoulders according to Section 625.
2. See Sheet 132, Detail E401-1 for transition between milling & overlay and FDR.

* Correct deficient cross-slopes with a wedge or level binder and surface course as directed by CO.

** In areas where shoulder rutting has occurred along Craggy Garden's Picnic Area Access Road, blade shoulder and add aggregate to within 1/2" of finished edge of pavement elevation, as directed by CO.

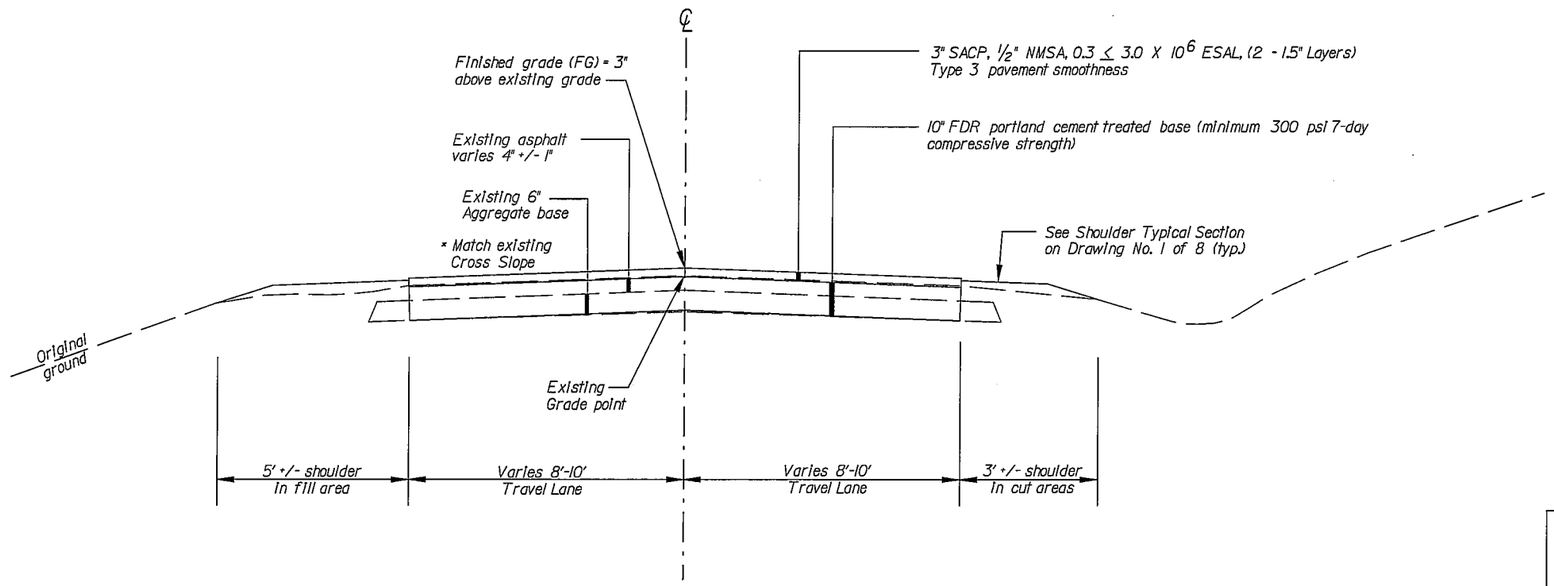

FULL DEPTH RECLAMATION (FDR)

Craggy Garden's Picnic Area Access Road
Sta. 19+85 - Sta. 20+50

U.S. DEPARTMENT OF TRANSPORTATION
FEDERAL HIGHWAY ADMINISTRATION
EASTERN FEDERAL LANDS HIGHWAY DIVISION
STERLING, VIRGINIA

CRAGGY GARDEN'S PICNIC AREA ACCESS ROAD

TYPICAL SECTIONS

Drawing No. 4 of 8

7/10/2008 11:10:47 AM G:\roVCT052885\TRAVFINAL_MOD_7\typ_sections.dgn

NPS NO.	REG	STATE	PROJECT	SHEET NO.	TOTAL SHEETS
601 / 43918	SE	NC	PRA-BLRI-2P14	8	166

NOTES:

1. Apply turf establishment to all unpaved, disturbed areas and reconditioned shoulders according to Section 625.

* Match existing cross slope except as directed by CO.

** In areas where shoulder rutting has occurred along Craggy Garden's Picnic Area Access Road, blade shoulder and add aggregate to within ½" of finished edge of pavement elevation, as directed by CO.

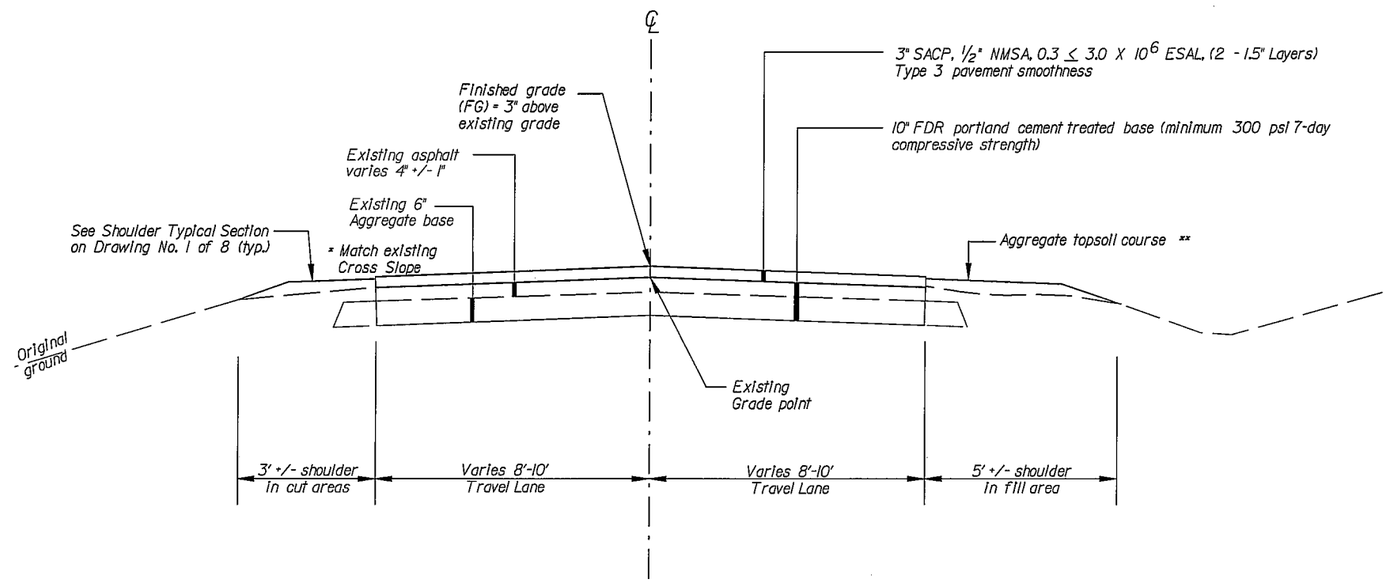

FULL DEPTH RECLAMATION (FDR)

CRAGGY GARDEN'S PICNIC AREA ACCESS ROAD

Sta. 24+00 - Sta. 28+50

U.S. DEPARTMENT OF TRANSPORTATION
FEDERAL HIGHWAY ADMINISTRATION
EASTERN FEDERAL LANDS HIGHWAY DIVISION
STERLING, VIRGINIA

CRAGGY GARDEN'S PICNIC AREA ACCESS ROAD

TYPICAL SECTIONS

Drawing No. 5 of 8

7/10/2008 11:10:55 AM G:\fra\CT05288S\TRA\FINAL_MOD_7\typ_sections.dgn

NPS NO.	REG	STATE	PROJECT	SHEET NO.	TOTAL SHEETS
601 / 43918	SE	NC	PRA-BLRI-2P14	9	166

NOTES:

1. See Parking Plan sheet for pavement and sidewalk widths.
2. Apply turf establishment to all unpaved, disturbed areas and reconditioned shoulders according to Section 625.
3. Reset stone curb. Replace any broken curb with stone curb matching in appearance to existing curb. Reset existing stone curb using base as necessary to obtain a smooth profile along top of curb. See Detail E609-A.
4. Remove all existing concrete curbs behind existing stone curbs prior to paving asphalt sidewalk and resetting stone curb.
5. Construct shoulder flush with sidewalk on all pull-offs and parking areas.
6. Reset stone curb with 6" reveal. Curb reveal may be adjusted as directed by CO to provide positive sidewalk drainage and maintain existing wall relief.

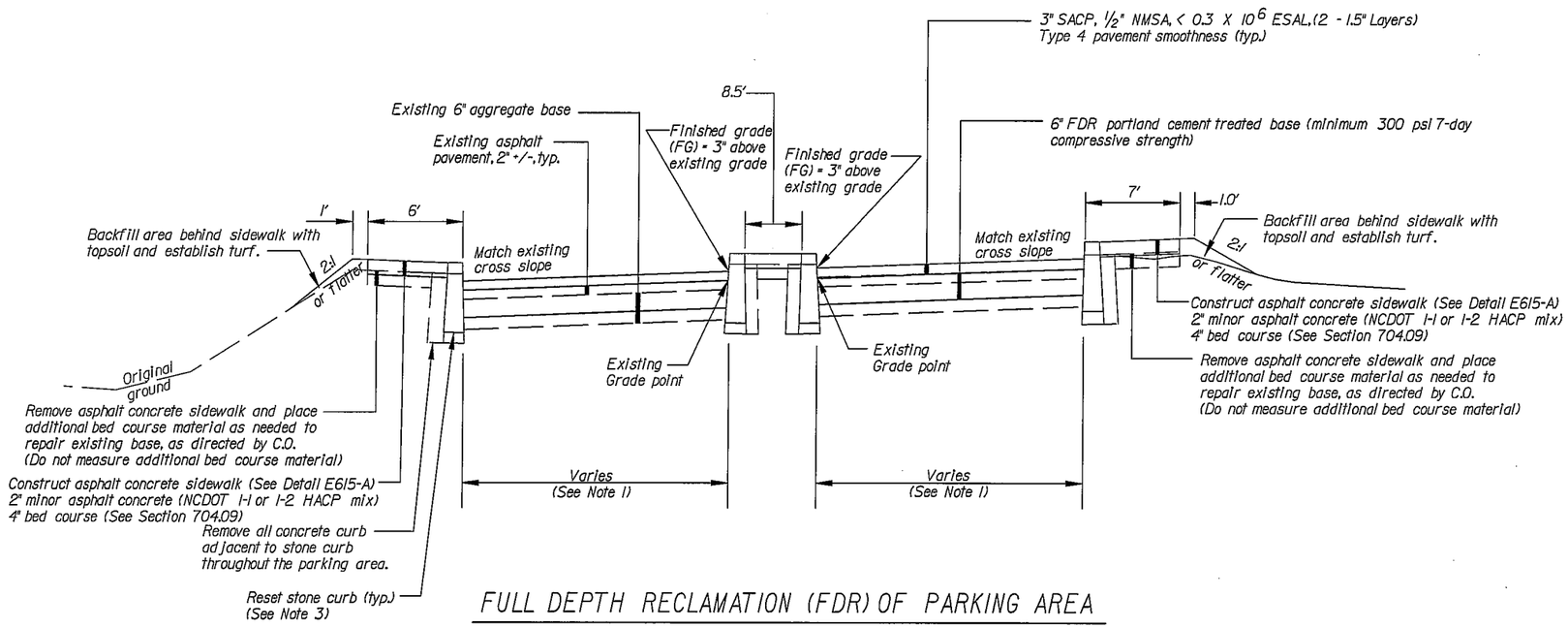

FULL DEPTH RECLAMATION (FDR) OF PARKING AREA

Craggy Garden's Picnic Area Parking

U.S. DEPARTMENT OF TRANSPORTATION
FEDERAL HIGHWAY ADMINISTRATION
EASTERN FEDERAL LANDS HIGHWAY DIVISION
STERLING, VIRGINIA

CRAGGY GARDEN'S PICNIC AREA ACCESS ROAD AND CRAGGY GARDEN'S PICNIC AREA PARKING

TYPICAL SECTIONS

Drawing No. 6 of 8

7/10/2008 11:11:03 AM G:\tra\CT052885\TRA\FINAL_MOD_7\typ_sections.dgn

NPS NO.	REG	STATE	PROJECT	SHEET NO.	TOTAL SHEETS
601 / 43918	SE	NC	PRA-BLRI-2P14	10	166

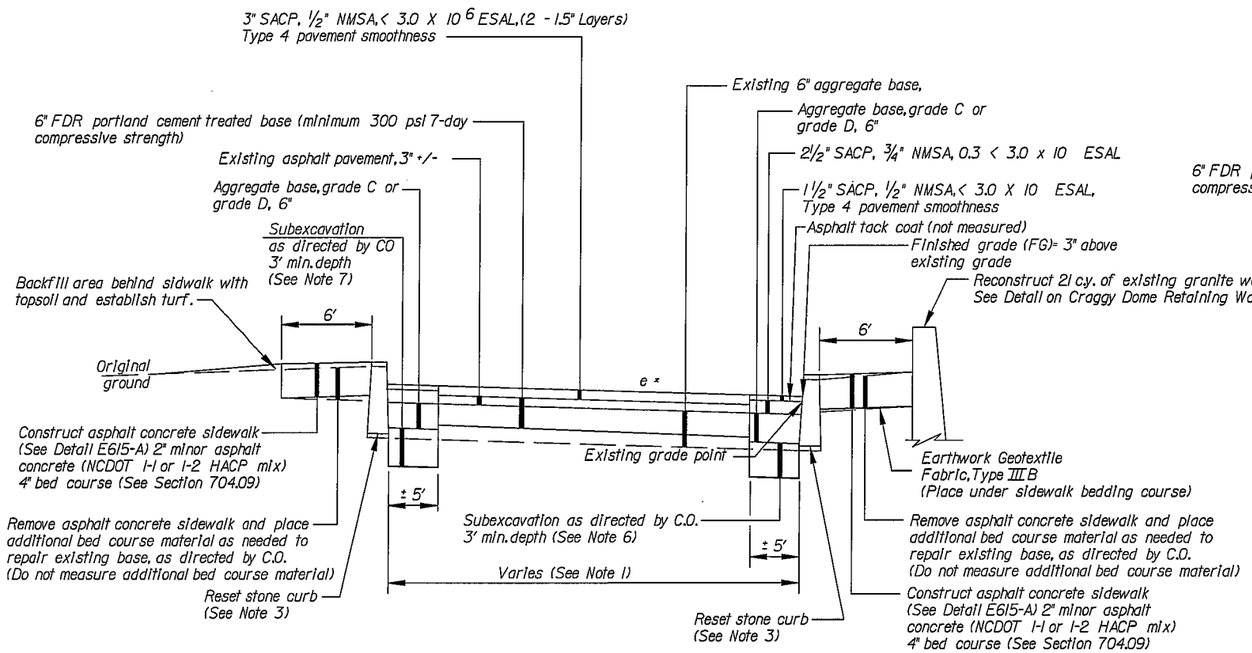

FULL DEPTH RECLAMATION (FDR) OF PARKING AREA

Craggy Dome Upper Parking Area

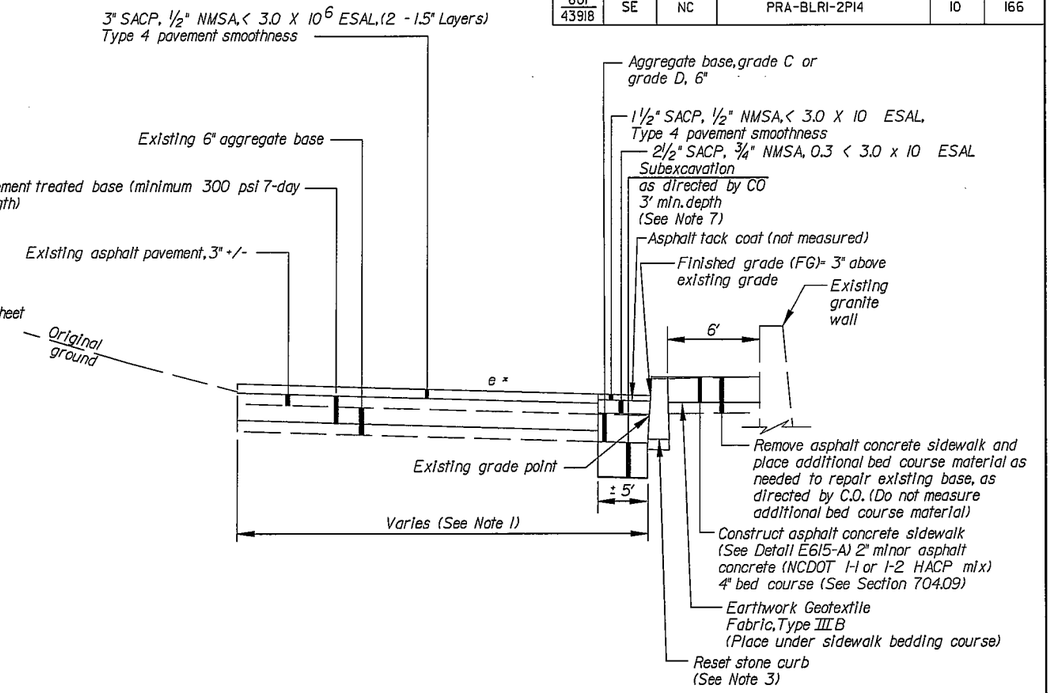

FULL DEPTH RECLAMATION (FDR) OF PARKING AREA

Craggy Dome Lower Parking Area

* Survey parking area prior to removal. Reconstruct cross-slopes to match existing, except as shown in the plans in the vicinity of the northwest drainage structure by the lower wall.

NOTES:

1. See Parking Plan sheet for pavement and sidewalk widths.
2. Apply turf establishment to all unpaved, disturbed areas and reconditioned shoulders according to Section 625.
3. Reset stone curb. Replace any broken curb with stone curb matching in appearance to existing curb. Reset existing stone curb using base as necessary to obtain a smooth profile along top of curb. See Detail E609-A.
4. Remove all existing concrete curbs behind existing stone curbs prior to paving asphalt sidewalk and resetting stone curb.
5. Construct shoulder flush with sidewalk on all pull-offs and parking areas.
6. Reset stone curb with 6" reveal. Curb reveal may be adjusted as directed by CO to provide positive sidewalk drainage and maintain existing wall relief.
7. Excavate additional subgrade as directed by CO. Reconstruct using existing excavated material and/or select borrow as directed by CO. Place one layer of geogrid for each additional 18" subexcavation required beyond minimum depth.

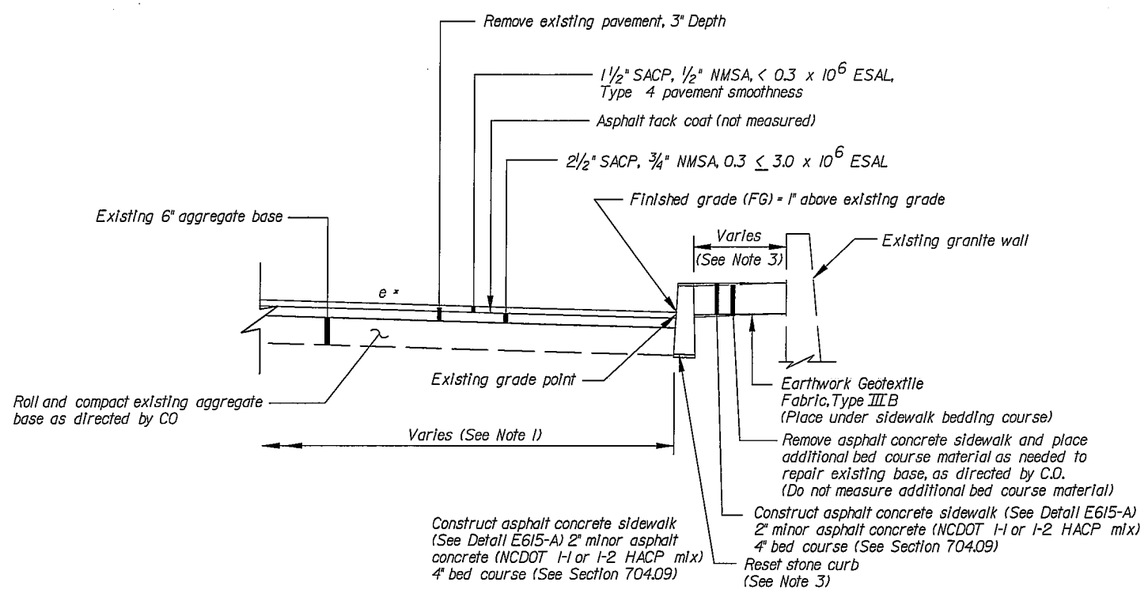

PAVEMENT RECONSTRUCTION OF PARKING AREA

Craggy Gardens Visitor Center Parking Area

U.S. DEPARTMENT OF TRANSPORTATION
FEDERAL HIGHWAY ADMINISTRATION
EASTERN FEDERAL LANDS HIGHWAY DIVISION
STERLING, VIRGINIA

CRAGGY DOME PARKING AREA
AND CRAGGY GARDEN'S
VISITOR CENTER PARKING AREA

TYPICAL SECTIONS

Drawing No. 7 of 8

7/11/2008 10:12:07 AM G:\traVCT052885\TRAVFINAL_MOD_7\typ_sections.dgn

NPS NO.	REG	STATE	PROJECT	SHEET NO.	TOTAL SHEETS
601 / 43918	SE	NC	PRA-BLRI-2P14	11	166

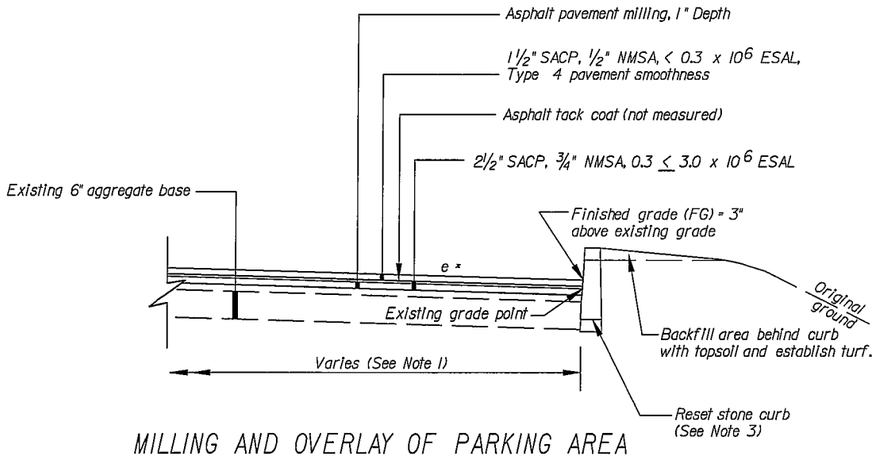

MILLING AND OVERLAY OF PARKING AREA

Balsam Gap Parking Area

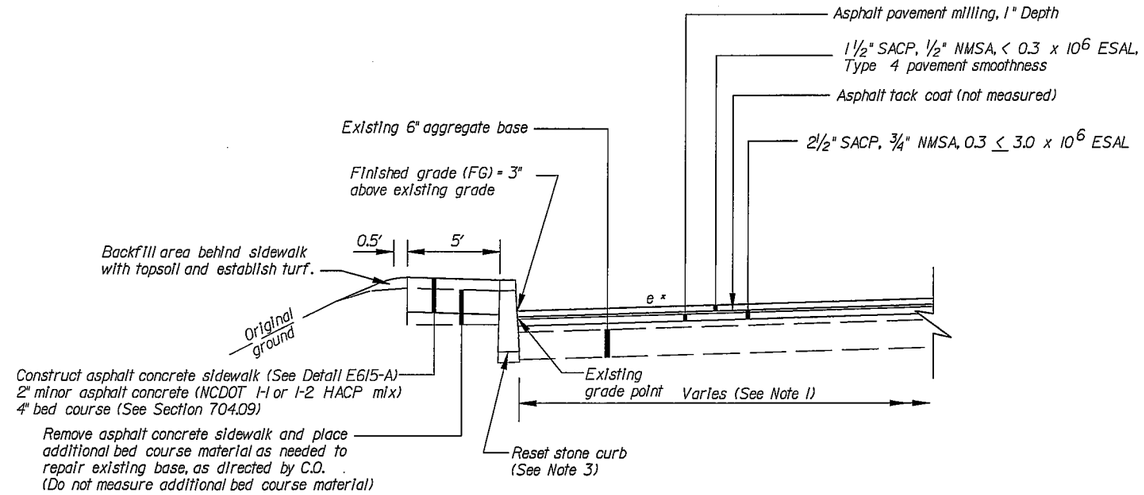

MILLING AND OVERLAY OF PARKING AREA

Glassmine Falls Parking Overlook

NOTES:

1. See Parking Plan sheet for pavement and sidewalk widths.
2. Apply turf establishment to all unpaved, disturbed areas and reconditioned shoulders according to Section 625.
3. Reset stone curb. Replace any broken curb with stone curb matching in appearance to existing curb. Reset existing stone curb using base as necessary to obtain a smooth profile along top of curb. See Detail E609-A.
4. Remove all existing concrete curbs behind existing stone curbs prior to paving asphalt sidewalk and resetting stone curb.
5. Construct shoulder flush with sidewalk on all pull-offs and parking areas.
6. Reset stone curb with 6" reveal. Curb reveal may be adjusted as directed by CO to provide positive sidewalk drainage and maintain existing wall relief.

* Match existing cross slope, except as directed by CO.

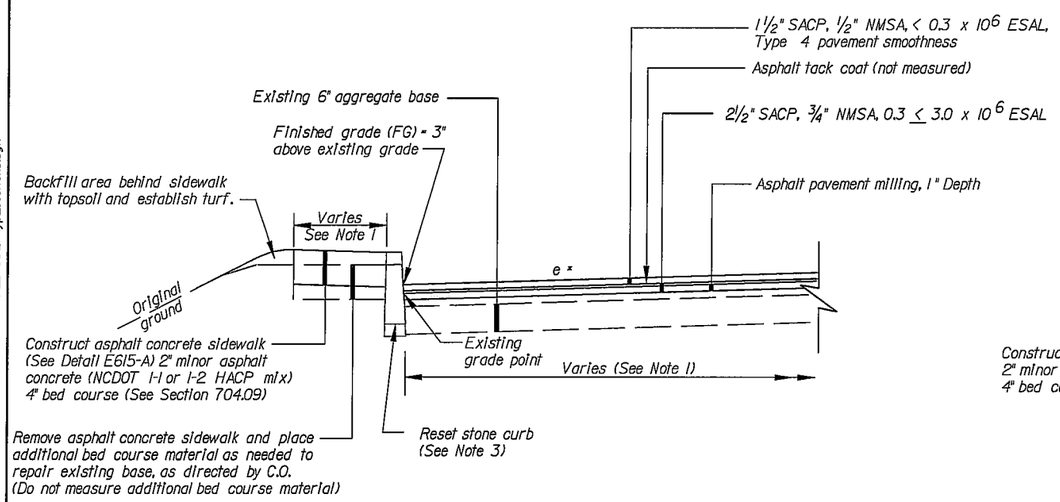

MILLING AND OVERLAY OF PARKING AREA

Lanes Pinnacle Parking Overlook

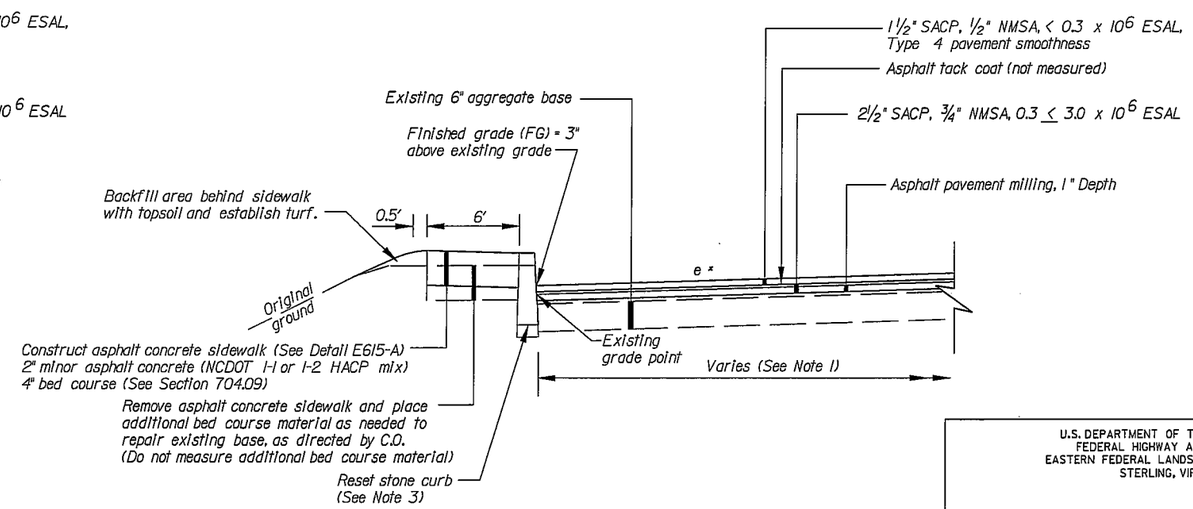

MILLING AND OVERLAY OF PARKING AREA

Bull Creek Valley Parking Overlook
Graybeard Mountain Parking Overlook

U.S. DEPARTMENT OF TRANSPORTATION
FEDERAL HIGHWAY ADMINISTRATION
EASTERN FEDERAL LANDS HIGHWAY DIVISION
STERLING, VIRGINIA

PARKING OVERLOOK

TYPICAL SECTIONS

Drawing No. 8 of 8

7/10/2008 11:11:21 AM G:\traCT052885\TRA\FINAL_MOD_7\typ_sections.dgn

NPS NO.	REG	STATE	PROJECT	SHEET NO.	TOTAL SHEETS
601 43918	SE	NC	PRA-BLRI-2P14	12	166

ITEM	DESCRIPTION	UNIT							ESTIMATED QUANTITIES PLAN	BID SCHEDULE
15101	MOBILIZATION	LPSM							ALL	ALL
15201	CONSTRUCTION SURVEY AND STAKING	LPSM							ALL	ALL
15401	CONTRACTOR TESTING	LPSM							ALL	ALL
15702	TEMPORARY TURF ESTABLISHMENT	ACRE							5	5
15703	SILT FENCE	LNFT							50285	52,800
15713	PLASTIC LINING	SQYD							400	400
15716	INLET PROTECTION	EACH							34	38
15719C	TEMPORARY MULCH	TON							4	5
20103	CLEARING AND GRUBBING	SQYD							620	650
203030A	REMOVAL OF ASPHALT SIDEWALK	SQYD							196	210
20303UD	REMOVAL OF STONE PAVED WATERWAY	SQYD							602	660
20304Y	REMOVAL OF STONE MASONRY	LPSM							ALL	ALL
30305B	DITCH RECONDITIONING	LNFT							890	1,000
30404	PORTLAND CEMENT	TON							1402	1,550
30405AS	CEMENT AGGREGATE STABILIZATION, IN PLACE AGGREGATE, 10-INCH DEPTH	SQYD							62327	65,500
30501	AGGREGATE-TOPSOIL COURSE	TON							2413	2,550
40101	HOT ASPHALT CONCRETE PAVEMENT	TON							20	20
40201	MINOR HOT ASPHALT CONCRETE	TON							1	2
41301B	ASPHALT PAVEMENT MILLING, 1-INCH DEPTH	SQYD							1804	1,900
41301F	ASPHALT PAVEMENT MILLING, 2-INCH DEPTH	SQYD							12997	13,600
41801BAD	SUPERPAVE ASPHALT CONCRETE PAVEMENT, 1/2-INCH NOMINAL MAXIMUM SIZE AGGREGATE, < 0.3 ESAL, TYPE 4 PAVEMENT SMOOTHNESS	TON							149	160
41801BBB	SUPERPAVE ASPHALT CONCRETE PAVEMENT, 1/2-INCH NOMINAL MAXIMUM SIZE AGGREGATE, 0.3 ≤ 3 ESAL, TYPE 2 PAVEMENT SMOOTHNESS	TON							9349	9,800
41801BBC	SUPERPAVE ASPHALT CONCRETE PAVEMENT, 1/2-INCH NOMINAL MAXIMUM SIZE AGGREGATE, 0.3 ≤ 3 ESAL, TYPE 3 PAVEMENT SMOOTHNESS	TON							1073	1,200
41801CB	SUPERPAVE ASPHALT CONCRETE PAVEMENT, 3/4-INCH NOMINAL MAXIMUM SIZE AGGREGATE, 0.3 ≤ 3 ESAL	TON							2035	2,140

ITEM	DESCRIPTION	UNIT							ESTIMATED QUANTITIES PLAN	BID SCHEDULE
41802AB	SUPERPAVE ASPHALT CONCRETE PAVEMENT, 3/8-INCH NOMINAL MAXIMUM SIZE AGGREGATE, 0.3 ≤3 ESAL, WEDGE AND LEVELING	TON							3800	3,800
41902A	ASPHALT PAVEMENT, SHALLOW DEPTH PATCH, TYPE 1	SQFT							988	1,200
60503	GEOCOMPOSITE UNDERDRAIN SYSTEM (18 - MULTI-FLOW DRAINAGE TUBING)	LNFT							424	450
60507F	6-INCH OUTLET PIPE (SCHEDULE 40 PVC)	LNFT							20	25
60509	SAND CH OUTLET PIPE (SCHEDULE 40 PVC)	CUYD							167	180
60703A	RECONDITIONING CULVERTS IN PLACE	LNFT							2656	2,770
60704	RECONDITIONING DRAINAGE STRUCTURES	EACH							30	33
60706	CONCRETE PIPE JOINT REPAIR	EACH								4
60801B	PAVED WATERWAY, TYPE 2	SQYD							615	670
60809B	RECONDITION PAVED WATERWAY, TYPE 2	SQYD							2209	2,360
60906	RESET CURB	LNFT							628	660
61501A	ASPHALT CONCRETE SIDEWALK	SQYD							229	250
62004	REPOINT STONE MASONRY	LNFT							400	430
62011	RESET STONE MASONRY (REPAIR)	CUYD							2	3
62016	RESET STONE MASONRY (MEDIAN)	SQYD							15	15
62403	FURNISHING AND PLACING TOPSOIL	CUYD							228	240
62509	TURF ESTABLISHMENT	ACRE							6	6
63304CC	SIGNS, ALUMINUM PANELS, TYPE 3 SHEETING	SQFT							160	160
63401LA	PAVEMENT MARKINGS, TYPE POLYUREA, SOLID	LNFT							61808	64,800
63401LB	PAVEMENT MARKINGS, TYPE POLYUREA, BROKEN	LNFT							884	970
63501	TEMPORARY TRAFFIC CONTROL (FLOOD LIGHTS)	LPSM							ALL	ALL
63505C	BARRICADE, TYPE 3 CONTROL (FLOOD LIGHTS)	EACH							2	2
63506A	CONE, TYPE A	EACH							290	380
63507	CONSTRUCTION SIGN	SQFT							1950	1,968
63508B	DRUM, TYPE B	EACH							290	380
63509	FLAGGER YPE B	HOUR							1600	1,800
63510	PILOT CAR	HOUR							300	300

LIMITS OF WORK STA 369/00+00 TO 375/04.56

$$$$DATE$$$$ $TIME$ $$$$DGN$$$

U.S. DEPARTMENT OF TRANSPORTATION
FEDERAL HIGHWAY ADMINISTRATION
EASTERN FEDERAL LANDS HIGHWAY DIVISION
STERLING, VIRGINIA

BLUE RIDGE PARKWAY

SCHEDULE A
TABULATION OF
QUANTITIES

NPS NO.	REG	STATE	PROJECT	SHEET NO.	TOTAL SHEETS
601 / 43918	SE	NC	PRA-BLRI-2P14	13	166

ITEM	DESCRIPTION	UNIT							ESTIMATED QUANTITIES	
									PLAN	BID SCHEDULE
63515	TEMPORARY PAVEMENT MARKINGS	MILE							19	20
63521A	WARNING LIGHT, TYPE A	EACH							290	380
63521B	WARNING LIGHT, TYPE B	EACH							34	35
63521C	WARNING LIGHT, TYPE C	EACH							290	380
63529	TEMPORARY TRAFFIC SIGNAL SYSTEM	EACH							2	2
63530	RELOCATING TEMPORARY TRAFFIC SIGNAL SYSTEM	EACH							6	6
63701	FIELD OFFICE	EACH							1	1

U.S. DEPARTMENT OF TRANSPORTATION
FEDERAL HIGHWAY ADMINISTRATION
EASTERN FEDERAL LANDS HIGHWAY DIVISION
STERLING, VIRGINIA

BLUE RIDGE PARKWAY

SCHEDULE A
TABULATION OF
QUANTITIES

7/10/2008 11:19:35 AM G:\tra\CT052885\TRA\FINAL_MOD_7\tab_quantities.dgn

NPS NO.	REG	STATE	PROJECT	SHEET NO.	TOTAL SHEETS
601 / 43918	SE	NC	PRA-BLRI-2P14	14	166

ITEM	DESCRIPTION	UNIT						ESTIMATED QUANTITIES PLAN	ESTIMATED QUANTITIES BID SCHEDULE
15201	CONSTRUCTION SURVEY AND STAKING	LPSM						ALL	ALL
15401	CONTRACTOR TESTING	LPSM						ALL	ALL
15702	TEMPORARY TURF ESTABLISHMENT	ACRE						4	4
15703	SILT FENCE	LNFT						15000	15.800
15713	PLASTIC LINING	SQYD						300	300
15716	INLET PROTECTION	EACH						15	17
15719C	TEMPORARY MULCH	TON						4	5
20301AE	REMOVAL OF FRAME AND GRATE	EACH						2	2
20301AT	REMOVAL OF RAISED PAVEMENT MARKER	EACH						26	30
20303PA	REMOVAL OF ASPHALT PAVEMENT	SQYD						5968	6.270
20303QA	REMOVAL OF ASPHALT SIDEWALK	SQYD						527	560
20303UA	REMOVAL OF ASPHALT PAVED WATERWAY	SQYD						2141	2.250
20303UD	REMOVAL OF STONE PAVED WATERWAY	SQYD						388	420
30305B	DITCH RECONDITIONING ING C OR D	LNFT						1495	1.600
30404	PORTLAND CEMENT	TON						623	660
30405AS	CEMENT AGGREGATE STABILIZATION. IN PLACE AGGREGATE. 10-INCH DEPTH	SQYD						25066	26.300
30501	AGGREGATE-TOPSOIL COURSE	TON						2069	2.170
40201	MINOR HOT ASPHALT CONCRETE	TON						31	40
41301F	ASPHALT PAVEMENT MILLING. 2-INCH DEPTH	SQYD						27165	28.500
41801BAD	SUPERPAVE ASPHALT CONCRETE PAVEMENT. 1/2-INCH NOMINAL MAXIMUM SIZE AGGREGATE. $<$0.3 ESAL. TYPE 4 PAVEMENT SMOOTHNESS	TON						243	260
41801BBB	SUPERPAVE ASPHALT CONCRETE PAVEMENT. 1/2-INCH NOMINAL MAXIMUM SIZE AGGREGATE. 0.3 $\leq$ 3 ESAL. TYPE 2 PAVEMENT SMOOTHNESS	TON						3760	3.950
41801BBC	SUPERPAVE ASPHALT CONCRETE PAVEMENT. 1/2-INCH NOMINAL MAXIMUM SIZE AGGREGATE. 0.3 $\leq$ 3 ESAL. TYPE 3 PAVEMENT SMOOTHNESS	TON						2399	2.500

ITEM	DESCRIPTION	UNIT						ESTIMATED QUANTITIES PLAN	ESTIMATED QUANTITIES BID SCHEDULE
41801CB	SUPERPAVE ASPHALT CONCRETE PAVEMENT. 3/4-INCH NOMINAL MAXIMUM SIZE AGGREGATE. 0.3 $\leq$3 ESAL	TON						4399	4.600
41802AB	SUPERPAVE ASPHALT CONCRETE PAVEMENT. 3/8-INCH NOMINAL MAXIMUM SIZE AGGREGATE. 0.3 $\leq$3 ESAL. WEDGE AND LEVELING	TON						2100	2.100
41901B	ASPHALT PAVEMENT. FULL DEPTH PATCH. TYPE 2 NCH NOMINAL MAXIMUM SIZE AGGREGATE. 0.3 $\leq$3 ESAL. WEDGE AND LEVELING	SQFT						301	370
41902A	ASPHALT PAVEMENT. SHALLOW DEPTH PATCH. TYPE 1	SQFT						2466	2.800
60201E	4-INCH PIPE CULVERT	LNFT						3	4
60409FA	METAL FRAME AND GRATE. TYPE 6A	EACH						2	2
60501	UNDERDRAIN SYSTEM	LNFT						100	150
60703A	RECONDITIONING CULVERTS IN PLACE	LNFT						860	900
60704	RECONDITIONING DRAINAGE STRUCTURES	EACH						29	32
60705J	LINING 15-INCH PIPE CULVERT	LNFT						37	50
60705M	LINING 24-INCH PIPE CULVERT	LNFT						79	100
60706	CONCRETE PIPE JOINT REPAIR	EACH							2
60801B	PAVED WATERWAY. TYPE 2	SQYD						735	810
60801E	PAVED WATERWAY. TYPE 5	SQYD						2118	2.300
60809B	RECONDITION PAVED WATERWAY. TYPE 2	SQYD						1688	1.740
60906	RESET CURB	LNFT						852	900
61401	LEAN CONCRETE BACKFILL	CUYD						1	1
61501A	ASPHALT CONCRETE SIDEWALK	SQYD						527	555
61505A	ASPHALT WHEELCHAIR RAMP LK	SQYD						57	65
62004	REPOINT STONE MASONRY	LNFT						2600	2.735
62011	RESET STONE MASONRY (REPAIR)	CUYD						22	27
62509	TURF ESTABLISHMENT	ACRE						4	5
62901D	EROSION CONTROL MAT TYPE 4	SQYD						6	6
63401HA	PAVEMENT MARKINGS. TYPE H. SOLID	LNFT						1197	1.310
63401JA	PAVEMENT MARKINGS. TYPE J. SOLID	LNFT						120	150
63401LA	PAVEMENT MARKINGS. TYPE POLYUREA. SOLID	LNFT						46498	48.800

OPTION I LIMITS OF WORK STA 364/21+12 TO 369/00.00

U.S. DEPARTMENT OF TRANSPORTATION
FEDERAL HIGHWAY ADMINISTRATION
EASTERN FEDERAL LANDS HIGHWAY DIVISION
STERLING, VIRGINIA

BLUE RIDGE PARKWAY

OPTION I
TABULATION OF
QUANTITIES

$$$$DATE$$$$ $TIME$ $$$$DGN$$

NPS NO.	REG	STATE	PROJECT	SHEET NO.	TOTAL SHEETS
601 / 43918	SE	NC	PRA-BLRI-2P14	15	166

ITEM	DESCRIPTION	UNIT						ESTIMATED QUANTITIES PLAN	ESTIMATED QUANTITIES BID SCHEDULE
63401LB	PAVEMENT MARKINGS, TYPE POLYUREA, BROKEN	LNFT						484	530
63405D	RAISED PAVEMENT MARKERS, TYPE D	EACH						8	9
63405E	RAISED PAVEMENT MARKERS, TYPE E	EACH						17	20
63406JH	PAVEMENT MARKINGS, TYPE J, HANDICAP SYMBOL	EACH						4	4
63501	TEMPORARY TRAFFIC CONTROL (FLOOD LIGHTS)	LPSM						ALL	ALL
63505C	BARRICADE, TYPE 3	EACH						2	2
63506A	CONE, TYPE A	EACH						272	360
63508B	DRUM, TYPE B	EACH						272	360
63509	FLAGGER	HOUR						544	600
63510	PILOT CAR	HOUR						200	200
63515	TEMPORARY PAVEMENT MARKINGS	MILE						12	13
63521A	WARNING LIGHT, TYPE A	EACH						272	360
63521B	WARNING LIGHT, TYPE B	EACH						29	30
63521C	WARNING LIGHT, TYPE C	EACH						272	360
63529	TEMPORARY TRAFFIC SIGNAL SYSTEM	EACH						1	1
63530	RELOCATING TEMPORARY TRAFFIC SIGNAL SYSTEM	EACH						1	1
63803	LOCATE UTILITIES (TEST PITS)	LPSM						ALL	ALL

U.S. DEPARTMENT OF TRANSPORTATION
FEDERAL HIGHWAY ADMINISTRATION
EASTERN FEDERAL LANDS HIGHWAY DIVISION
STERLING, VIRGINIA

BLUE RIDGE PARKWAY

OPTION I
TABULATION OF
QUANTITIES

7/10/2008 11:19:51 AM G:\traVCT052885\TRAVFINAL_MOD_7\tab_quantities.dgn

ITEM	DESCRIPTION	UNIT						ESTIMATED QUANTITIES PLAN	ESTIMATED QUANTITIES BID SCHEDULE
15201	CONSTRUCTION SURVEY AND STAKING	LPSM						ALL	ALL
15401	CONTRACTOR TESTING	LPSM						ALL	ALL
15702	TEMPORARY TURF ESTABLISHMENT	ACRE						4	4
15703	SILT FENCE	LNFT						10220	10,800
15713	PLASTIC LINING	SQYD						300	300
15716	INLET PROTECTION	EACH						1	2
15719C	TEMPORARY MULCH	TON						3	4
20301AE	REMOVAL OF FRAME AND GRATE	EACH						1	1
20301AT	REMOVAL OF RAISED PAVEMENT MARKER	EACH						13	15
20302H	REMOVAL OF PIPE CULVERTS	LNFT						45	60
20303PA	REMOVAL OF ASPHALT PAVEMENT	SQYD						1161	1,370
20303QA	REMOVAL OF ASPHALT SIDEWALK	SQYD						127	140
20303UA	REMOVAL OF ASPHALT PAVED WATERWAY	SQYD						228	250
20401	ROADWAY EXCAVATION	CUYD						444	490
20402	SUBEXCAVATION	CUYD						1550	1,690
20405	SELECT BORROW	CUYD						1722	2,300
20701CB	EARTHWORK GEOTEXTILE, TYPE III-B	SQYD						1136	1,260
30101Z	AGGREGATE BASE, GRADING C OR D	TON						438	490
30305B	DITCH RECONDITIONING ING C OR D	LNFT						3929	4,300
30501	AGGREGATE-TOPSOIL COURSE	TON						1593	1,650
40201	MINOR HOT ASPHALT CONCRETE	TON						134	158
41301B	ASPHALT PAVEMENT MILLING, 1-INCH DEPTH	SQYD						2422	2,600
41301F	ASPHALT PAVEMENT MILLING, 2-INCH DEPTH	SQYD						50563	53,900
41301H	ASPHALT PAVEMENT MILLING, 3-INCH DEPTH	SQYD						528	600
41801BAD	SUPERPAVE ASPHALT CONCRETE PAVEMENT, 1/2-INCH NOMINAL MAXIMUM SIZE AGGREGATE, < 0.3 ESAL, TYPE 4 PAVEMENT SMOOTHNESS	TON						200	220

ITEM	DESCRIPTION	UNIT						ESTIMATED QUANTITIES PLAN	ESTIMATED QUANTITIES BID SCHEDULE
41801BBC	SUPERPAVE ASPHALT CONCRETE PAVEMENT, 1/2-INCH NOMINAL MAXIMUM SIZE AGGREGATE, 0.3 ≤ 3 ESAL, TYPE 3 PAVEMENT SMOOTHNESS	TON						4499	4,700
41801CB	SUPERPAVE ASPHALT CONCRETE PAVEMENT, 3/4-INCH NOMINAL MAXIMUM SIZE AGGREGATE, 0.3 ≤ 3 ESAL	TON						7840	8,200
41802AB	SUPERPAVE ASPHALT CONCRETE PAVEMENT, 3/8-INCH NOMINAL MAXIMUM SIZE AGGREGATE, 0.3 ≤ 3 ESAL, WEDGE AND LEVELING	TON						400	400
41902A	ASPHALT PAVEMENT, SHALLOW DEPTH PATCH, TYPE 1	SQFT						384	420
60201K	18-INCH PIPE CULVERT	LNFT						45	50
60409D	METAL FRAME AND GRATE, TYPE 4	EACH						1	1
60703A	RECONDITIONING CULVERTS IN PLACE	LNFT						1115	1,185
60704	RECONDITIONING DRAINAGE STRUCTURES	EACH						42	46
60706	CONCRETE PIPE JOINT REPAIR	EACH							2
60809B	RECONDITION PAVED WATERWAY, TYPE 2	SQYD						93	100
60906	RESET CURB	LNFT						826	870
61501A	ASPHALT CONCRETE SIDEWALK	SQYD						135	145
61703	REMOVING AND RESETTING GUARDRAIL	LNFT						330	330
62004	REPOINT STONE MASONRY	LNFT						25	30
62006	REMOVE AND RESET STONE MASONRY HEADWALL	EACH						2	2
62011	RESET STONE MASONRY (REPAIR)	CUYD						1	2
62403	FURNISHING AND PLACING TOPSOIL	CUYD						147	160
62509	TURF ESTABLISHMENT	ACRE						4	4
63401JA	PAVEMENT MARKINGS, TYPE J, SOLID	LNFT						120	150
63401LA	PAVEMENT MARKINGS, TYPE POLYUREA, SOLID	LNFT						45193	47,500
63401LB	PAVEMENT MARKINGS, TYPE POLYUREA, BROKEN	LNFT						3290	3,400
63405D	RAISED PAVEMENT MARKERS, TYPE D	EACH						5	6
63405E	RAISED PAVEMENT MARKERS, TYPE E	EACH						9	10
63501	TEMPORARY TRAFFIC CONTROL (FLOOD LIGHTS)	LPSM						ALL	ALL
63505C	BARRICADE, TYPE 3	EACH						2	2
63506A	CONE, TYPE A	EACH						272	360

OPTION 2 LIMITS OF WORK STA 359/39.00 TO 364/21+12

U.S. DEPARTMENT OF TRANSPORTATION
FEDERAL HIGHWAY ADMINISTRATION
EASTERN FEDERAL LANDS HIGHWAY DIVISION
STERLING, VIRGINIA

BLUE RIDGE PARKWAY

OPTION 2
TABULATION OF
QUANTITIES

$$$$DATE$$$$ $TIME$ $$$$DGN$$$

NPS NO.	REG	STATE	PROJECT	SHEET NO.	TOTAL SHEETS
601 / 43918	SE	NC	PRA-BLRI-2P14	17	166

ITEM	DESCRIPTION	UNIT						ESTIMATED QUANTITIES	
								PLAN	BID SCHEDULE
63508B	DRUM, TYPE B	EACH						272	360
63509	FLAGGER	HOUR						544	600
63510	PILOT CAR	HOUR						200	200
63515	TEMPORARY PAVEMENT MARKINGS	MILE						12	13
63521A	WARNING LIGHT, TYPE A	EACH						272	360
63521B	WARNING LIGHT, TYPE B	EACH						29	30
63521C	WARNING LIGHT, TYPE C	EACH						272	360
63529	TEMPORARY TRAFFIC SIGNAL SYSTEM	EACH						1	1
63530	RELOCATING TEMPORARY TRAFFIC SIGNAL SYSTEM	EACH						1	1
63803	LOCATE UTILITIES (TEST PITS)	LPSM						ALL	ALL

U.S. DEPARTMENT OF TRANSPORTATION
FEDERAL HIGHWAY ADMINISTRATION
EASTERN FEDERAL LANDS HIGHWAY DIVISION
STERLING, VIRGINIA

BLUE RIDGE PARKWAY

OPTION 2
TABULATION OF
QUANTITIES

7/10/2008 11:20:06 AM G:\tra\CT052885\TRA\FINAL_MOD_7\tab_quantities.dgn

NPS NO.	REG	STATE	PROJECT	SHEET NO.	TOTAL SHEETS
601/43918	SE	NC	PRA-BLRI-2P14	18	166

ITEM	DESCRIPTION	UNIT						ESTIMATED QUANTITIES PLAN	ESTIMATED QUANTITIES BID SCHEDULE
15201	CONSTRUCTION SURVEY AND STAKING	LPSM						ALL	ALL
15401	CONTRACTOR TESTING	LPSM						ALL	ALL
15702	TEMPORARY TURF ESTABLISHMENT	ACRE						1	1
15703	SILT FENCE	LNFT						1275	1,500
15716	INLET PROTECTION	EACH						4	6
15719C	TEMPORARY MULCH	TON						1	1
20301AE	REMOVAL OF FRAME AND GRATE	EACH						2	2
20301E	REMOVAL OF HEADWALLS	EACH						1	1
20302H	REMOVAL OF PIPE CULVERTS	LNFT						318	420
20302RB	REMOVAL OF PORTLAND CEMENT CONCRETE CURB (INCLUDES ASPHALT CURB)	LNFT						2138	2,220
20302W	REMOVAL OF GUARDRAIL	LNFT						510	510
203030A	REMOVAL OF ASPHALT SIDEWALK	SQYD						1135	1,190
20303UD	REMOVAL OF STONE PAVED WATERWAY	SQYD						156	170
20401	ROADWAY EXCAVATION	CUYD						2	5
20701CB	EARTHWORK GEOTEXTILE, TYPE III-B	SQYD						7	10
25101C	PLACED RIPRAP, CLASS 3	CUYD						28	30
25101D	PLACED RIPRAP, CLASS 4	CUYD						140	150
30305B	DITCH RECONDITIONING	LNFT						100	110
30404	PORTLAND CEMENT	TON						145	160
30405AN	CEMENT AGGREGATE STABILIZATION, IN PLACE AGGREGATE, 6-INCH DEPTH	SQYD						5968	6,270
30405AS	CEMENT AGGREGATE STABILIZATION, IN PLACE AGGREGATE, 10-INCH DEPTH	SQYD						1144	1,200
30501	AGGREGATE-TOPSOIL COURSE	TON						630	680
41301F	ASPHALT PAVEMENT MILLING, 2-INCH DEPTH	SQYD						7868	8,300
41801BAD	SUPERPAVE ASPHALT CONCRETE PAVEMENT, 1/2-INCH NOMINAL MAXIMUM SIZE AGGREGATE, <0.3 ESAL, TYPE 4 PAVEMENT SMOOTHNESS	TON						985	1,080

ITEM	DESCRIPTION	UNIT						ESTIMATED QUANTITIES PLAN	ESTIMATED QUANTITIES BID SCHEDULE
41801BBC	SUPERPAVE ASPHALT CONCRETE PAVEMENT, 1/2-INCH NOMINAL MAXIMUM SIZE AGGREGATE, 0.3 ≤ 3 ESAL, TYPE 3 PAVEMENT SMOOTHNESS	TON						1242	1,300
41801CB	SUPERPAVE ASPHALT CONCRETE PAVEMENT, 3/4-INCH NOMINAL MAXIMUM SIZE AGGREGATE, 0.3 ≤ 3 ESAL	TON						1625	1,700
41802AB	SUPERPAVE ASPHALT CONCRETE PAVEMENT, 3/8-INCH NOMINAL MAXIMUM SIZE AGGREGATE, 0.3 ≤ 3 ESAL, WEDGE AND LEVELING	TON						3700	3,700
41901B	ASPHALT PAVEMENT, FULL DEPTH PATCH, TYPE 2	SQFT						60	80
41902A	ASPHALT PAVEMENT, SHALLOW DEPTH PATCH, TYPE 1	SQFT						345	380
60104AK	CONCRETE, HEADWALL FOR 18-INCH PIPE CULVERT	EACH						2	2
60104AM	CONCRETE, HEADWALL FOR 24-INCH PIPE CULVERT	EACH						1	1
60201K	18-INCH PIPE CULVERT	LNFT						111	140
60201M	24-INCH PIPE CULVERT	LNFT						102	120
60203P	36-INCH EQUIVALENT DIAMETER, ARCH OR ELLIPTICAL CULVERT PIPE	LNFT						35	40
60409FA	METAL FRAME AND GRATE, TYPE 6A	EACH						2	2
60703A	RECONDITIONING CULVERTS IN PLACE	LNFT						126	140
60704	RECONDITIONING DRAINAGE STRUCTURES	EACH						3	4
60706	CONCRETE PIPE JOINT REPAIR	EACH							1
60801B	PAVED WATERWAY, TYPE 2	SQYD						206	220
60906	RESET CURB RWAY, TYPE 2	LNFT						2416	2,560
60915A	WHEELSTOP, CONCRETE	LNFT						8	10
61501A	ASPHALT CONCRETE SIDEWALK	SQYD						1135	1,230
61505A	ASPHALT WHEELCHAIR RAMP	SQYD						44	50
61701H	GUARDRAIL SYSTEM SBTB	LNFT						510	510
62003	REMOVE AND RESET STONE MASONRY (DRAINAGE STRUCTURE)	CUYD						1	1
62006	REMOVE AND RESET STONE MASONRY HEADWALL	EACH						3	3
62007AM	STONE MASONRY HEADWALL FOR 24-INCH PIPE CULVERT	EACH						1	1
62007AP	STONE MASONRY HEADWALL FOR 36-INCH PIPE CULVERT (36-INCH EQUIVALENT)	EACH						2	2

OPTION 3 LIMITS OF WORK: CRAGGY GARDENS ACCESS ROAD AND PICNIC AREA

U.S. DEPARTMENT OF TRANSPORTATION
FEDERAL HIGHWAY ADMINISTRATION
EASTERN FEDERAL LANDS HIGHWAY DIVISION
STERLING, VIRGINIA

BLUE RIDGE PARKWAY

OPTION 3
TABULATION OF
QUANTITIES

$$$$DATE$$$$ $TIME$ $$$$DGN$$

NPS NO.	REG	STATE	PROJECT	SHEET NO.	TOTAL SHEETS
601 / 43918	SE	NC	PRA-BLRI-2P14	19	166

ITEM	DESCRIPTION	UNIT						ESTIMATED QUANTITIES	
								PLAN	BID SCHEDULE
62403	FURNISHING AND PLACING TOPSOIL	CUYD						10	10
62509	TURF ESTABLISHMENT	ACRE						1	1
63401HA	PAVEMENT MARKINGS, TYPE H, SOLID	LNFT						2912	3,090
63401LA	PAVEMENT MARKINGS, TYPE POLYUREA, SOLID	LNFT						12014	12,900
63406JH	PAVEMENT MARKINGS, TYPE J, HANDICAP SYMBOL	EACH						5	5
63501	TEMPORARY TRAFFIC CONTROL (FLOOD LIGHTS)	LPSM						ALL	ALL
63505C	BARRICADE, TYPE 3	EACH						4	4
63507	CONSTRUCTION SIGN	SQFT						42	50
63508B	DRUM, TYPE B	EACH						14	20
63521A	WARNING LIGHT, TYPE A	EACH						14	20
63521B	WARNING LIGHT, TYPE B	EACH						1	1
63521C	WARNING LIGHT, TYPE C	EACH						14	20
63803	LOCATE UTILITIES (TEST PITS)	LPSM						ALL	ALL

U.S. DEPARTMENT OF TRANSPORTATION
FEDERAL HIGHWAY ADMINISTRATION
EASTERN FEDERAL LANDS HIGHWAY DIVISION
STERLING, VIRGINIA

BLUE RIDGE PARKWAY

OPTION 3
TABULATION OF
QUANTITIES

7/10/2008 11:20:20 AM G:\tra\CT052885\TRA\FINAL_MOD_7\tab_quantities.dgn

ITEM	DESCRIPTION	UNIT						ESTIMATED QUANTITIES PLAN	ESTIMATED QUANTITIES BID SCHEDULE
15201	CONSTRUCTION SURVEY AND STAKING	LPSM						ALL	ALL
15401	CONTRACTOR TESTING	LPSM						ALL	ALL
15702	TEMPORARY TURF ESTABLISHMENT	ACRE						1	1
15703	SILT FENCE	LNFT						750	800
15716	INLET PROTECTION	EACH						5	7
15719C	TEMPORARY MULCH	TON						1	1
20301AE	REMOVAL OF FRAME AND GRATE	EACH						4	4
20302H	REMOVAL OF PIPE CULVERTS	LNFT						85	120
20302RB	REMOVAL OF PORTLAND CEMENT CONCRETE CURB (INCLUDES ASPHALT CURB)	LNFT						70	80
20303AB	REMOVAL OF CONCRETE	SQYD						1	1
20303PA	REMOVAL OF ASPHALT PAVEMENT	SQYD						387	410
20303QA	REMOVAL OF ASPHALT SIDEWALK	SQYD						274	300
20401	ROADWAY EXCAVATION	CUYD						96	110
20402	SUBEXCAVATION	CUYD						644	710
20701CB	EARTHWORK GEOTEXTILE, TYPE III-B	SQYD						300	330
25101C	PLACED RIPRAP, CLASS 3	CUYD						7	10
30101Z	AGGREGATE BASE, GRADING C OR D	TON						117	130
30305B	DITCH RECONDITIONING	LNFT						352	390
30404	PORTLAND CEMENT	TON						58	60
30405AN	CEMENT AGGREGATE STABILIZATION, IN PLACE AGGREGATE, 6-INCH DEPTH	SQYD						2884	3,030
30501	AGGREGATE-TOPSOIL COURSE	TON						39	40
41801BAD	SUPERPAVE ASPHALT CONCRETE PAVEMENT, 1/2-INCH NOMINAL MAXIMUM SIZE AGGREGATE, $\leq$ 0.3 ESAL, TYPE 4 PAVEMENT SMOOTHNESS	TON						508	560
41801CB	SUPERPAVE ASPHALT CONCRETE PAVEMENT, 3/4-INCH NOMINAL MAXIMUM SIZE AGGREGATE, 0.3 $\leq$ 3 ESAL	TON						53	60
60101	CONCRETE	CUYD						7	10
60201K	18-INCH PIPE CULVERT	LNFT						85	110

ITEM	DESCRIPTION	UNIT						ESTIMATED QUANTITIES PLAN	ESTIMATED QUANTITIES BID SCHEDULE
60201M	24-INCH PIPE CULVERT	LNFT						68	80
60409D	METAL FRAME AND GRATE, TYPE 4	EACH						1	1
60409FA	METAL FRAME AND GRATE, TYPE 6A	EACH						3	3
60506F	6-INCH COLLECTOR PIPE	LNFT						66	70
60703A	RECONDITIONING CULVERTS IN PLACE	LNFT						47	55
60704	RECONDITIONING DRAINAGE STRUCTURES	EACH						3	4
60705K	LINING 18-INCH PIPE CULVERT	LNFT						10	20
60706	CONCRETE PIPE JOINT REPAIR	EACH							1
60903AX	STONE CURB, TYPE 1, 16-INCH DEPTH	LNFT						70	100
60906	RESET CURB RWAY, TYPE 2	LNFT						477	500
61501A	ASPHALT CONCRETE SIDEWALK	SQYD						291	320
61505A	ASPHALT WHEELCHAIR RAMP LK	SQYD						24	25
62003	REMOVE AND RESET STONE MASONRY (Retaining Wall)	CUYD						21	21
62004	REPOINT STONE MASONRY	LNFT						100	105
62007AM	STONE MASONRY HEADWALL FOR 24-INCH PIPE CULVERT	EACH						1	1
62008	CLEAN STONE MASONRY SURFACES	SQYD						59	65
62011	RESET STONE MASONRY (REPAIR)	CUYD						6	8
62509	TURF ESTABLISHMENT	ACRE						1	1
63401HA	PAVEMENT MARKINGS, TYPE H, SOLID	LNFT						1280	1,300
63406JH	PAVEMENT MARKINGS, TYPE J, HANDICAP SYMBOL	EACH						4	4
63501	TEMPORARY TRAFFIC CONTROL (FLOOD LIGHTS)	LPSM						ALL	ALL
63505C	BARRICADE, TYPE 3	EACH						2	2
63507	CONSTRUCTION SIGN	SQFT						36	40
63508B	DRUM, TYPE B	EACH						14	20
63521A	WARNING LIGHT, TYPE A	EACH						14	20
63521B	WARNING LIGHT, TYPE B	EACH						1	1
63521C	WARNING LIGHT, TYPE C	EACH						14	20
63803	LOCATE UTILITIES (TEST PITS)	LPSM						ALL	ALL

OPTION 4 LIMITS OF WORK: CRAGGY DOME OVERLOOK PARKING AREA

U.S. DEPARTMENT OF TRANSPORTATION
FEDERAL HIGHWAY ADMINISTRATION
EASTERN FEDERAL LANDS HIGHWAY DIVISION
STERLING, VIRGINIA

BLUE RIDGE PARKWAY

OPTION 4
TABULATION OF
QUANTITIES

NPS NO.	REG	STATE	PROJECT	SHEET NO.	TOTAL SHEETS
601 / 43918	SE	NC	PRA-BLRI-2P14	21	166

	Item 30501 Aggregate-Topsoil Course
Location	Ton
OPTION 1	
BLUE RIDGE PARKWAY	
364/23+02 - 364/52+69	193
MP 365	
365/0+00 - 365/28+79	187
365/32+83 - 365/51+50	121
MP 366	
366/0+00 - 366/53+55	534
MP 367	
367/0+00 - 367/53+09	574
MP 368	
368/0+00 - 368/49+72	460
SUB-TOTAL OPTION 1	2069
AS DIRECTED BY CO.	101
TOTAL OPTION 1	2170
SCHEDULE A	
MP 369	
369/0+00 - 369/56+49	367
MP 370	
370/0+00 - 370/49+76	596
MP 371	
371/0+00 - 371/55+08	358
MP 372	
372/0+00 - 372/51+63	339
MP 373	
373/0+00 - 373/50+26	331
MP 374	
374/0+00 - 374/20+92	136
374/29+41 - 374/55+82	186
374/30+00 - 374/31+00	61
MP 375	
375/0+00 - 375/4+56	39
SUB-TOTAL SCHEDULE A	2413
AS DIRECTED BY CO.	137
TOTAL SCHEDULE A	2550
OPTION 2	
MP 359	
359/39+00 - 359/52+80	90
MP 360	
360/0+00 - 360/53+58	348
MP 361	
361/0+00 - 361/52+21	339
MP 362	
362/0+00 - 362/51+40	334
MP 363	
363/0+00 - 363/53+51	348
MP 364	
364/0+00 - 364/20+50	133
SUB-TOTAL OPTION 2	1593
AS DIRECTED BY CO.	57
TOTAL OPTION 2	1650
OPTION 3	
CRAGGY GARDEN'S ACCESS ROAD	650
SUB-TOTAL OPTION 3	650
AS DIRECTED BY CO.	30
TOTAL OPTION 3	680

	Item 30501 Aggregate-Topsoil Course
Location	Ton
OPTION 4	
CRAGGY GARDEN'S PICNIC PARKING AREA	23
CRAGGY DOME PARKING OVERLOOK	16
SUB-TOTAL OPTION 4	39
AS DIRECTED BY CO.	1
TOTAL OPTION 4	40
PROJECT TOTAL	7090

Item 20405 Select Borrow	
Location	C.Y.
TOTAL OPTION 1	0
TOTAL SCHEDULE A	0
OPTION 2	
BLUE RIDGE PKWY	
361/39+75 - 361/41+55	640
362/40+85 - 362/42+30	516
363/21+15 - 363/22+65	567
SUB-TOTAL OPTION 2	1723
AS DIRECTED BY CO.	577
TOTAL OPTION 2	2300
TOTAL OPTION 3	0
TOTAL OPTION 4	0
PROJECT TOTAL	2300

Item 62403 Furnishing and Placing Topsoil	
Location	C.Y.
TOTAL OPTION 1	0
SCHEDULE A	
LANES PINNACLE (3")	19
BULL CREEK (3")	17
SLIDE AREA (12")	192
SUB-TOTAL SCHEDULE A	228
AS DIRECTED BY CO.	12
TOTAL SCHEDULE A	240
OPTION 2	
BLUE RIDGE PKWY	
361/39+75 - 361/41+55	40
362/40+85 - 362/42+30	32
363/21+15 - 363/22+65	33
BALSAM GAP (3")	11
GLASSMINE FALLS (3")	14
GRAYBEARD MTN (3")	17
SUB-TOTAL OPTION 2	147
AS DIRECTED BY CO.	13
TOTAL OPTION 2	160
OPTION 3	
ACCESS ROAD	10
SUB-TOTAL OPTION 3	10
AS DIRECTED BY CO.	0
TOTAL OPTION 3	10
TOTAL OPTION 4	0
TOTAL	410

U.S. DEPARTMENT OF TRANSPORTATION
FEDERAL HIGHWAY ADMINISTRATION
EASTERN FEDERAL LANDS HIGHWAY DIVISION
STERLING, VIRGINIA

BLUE RIDGE PARKWAY, CRAGGY GARDEN'S PICNIC AREA ACCESS ROAD AND PARKING OVERLOOKS

AGGREGATE TOPSOIL SCHEDULES

7/10/2008 11:21:51 AM G:\tra\CT052885\TRA\FINAL_MOD_7\quan_sum_02.dgn

NPS NO.	REG	STATE	PROJECT	SHEET NO.	TOTAL SHEETS
601 43918	SE	NC	PRA-BLRI-2P14	22	166

Location	Item 15716 Inlet Protection Each
OPTION 1	
BLUE RIDGE PARKWAY MP 366	
366/26+50	1
366/38+98	1
366/42+00	1
366/51+64	1
BLUE RIDGE PARKWAY MP 367	
367/8+89	1
367/15+20	1
367/18+40	1
367/22+40	1
367/24+30	1
367/27+36	1
367/43+34	1
367/47+87	1
BLUE RIDGE PARKWAY MP 368	
368/1+87	1
CRAGGY GARDENS VISITOR CENTER	2
SUB-TOTAL OPTION 1	15
AS DIRECTED BY CO	2
TOTAL OPTION 1	17
SCHEDULE A	
BLUE RIDGE PARKWAY MP 370	
370/22+64	1
370/31+50	1
370/45+75	1
BLUE RIDGE PARKWAY MP 371	
371/02+50	1
371/06+32	1
371/34+20	1
371/40+49	1
BLUE RIDGE PARKWAY MP 372	
372/00+75	1
372/11+88	1
372/14+33	1
372/20+03	1
372/23+70	1
372/26+54	1
372/32+69	1
372/42+50	1
372/46+16	1
BLUE RIDGE PARKWAY MP 373	
373/03+43	1
373/07+39	1
373/17+84	1
373/21+05	1
373/24+39	1
373/30+35	1
373/34+67	1
BLUE RIDGE PARKWAY MP 374	
374/10+80	1
374/12+79	1
374/15+67	1
374/19+20	1
374/29+35	2
374/43+83	1
SLIDE AREA	1
374/46+78	1
374/48+12	1
374/55+23	1
SUB-TOTAL SCHEDULE A	34
AS DIRECTED BY CO	4
TOTAL SCHEDULE A	38

Location	Item 15716 Inlet Protection Each
OPTION 2	
GRAYBEARD MTN OVERLOOK	1
SUB-TOTAL OPTION 2	1
AS DIRECTED BY CO	1
TOTAL OPTION 2	2
OPTION 3	
CRAGGY GARDEN'S PICNIC AREA	2
CRAGGY GARDENS ACCESS ROAD	2
SUB-TOTAL OPTION 3	4
AS DIRECTED BY CO	2
TOTAL OPTION 3	6
OPTION 4	
CRAGGY DOME PARKING AREA	5
SUB-TOTAL OPTION 4	5
AS DIRECTED BY CO	2
TOTAL OPTION 4	7
PROJECT TOTAL	70

Location	Item 15703 Silt Fence Ln Ft
OPTION 1	
BLUE RIDGE PARKWAY (AS DIRECTED BY C.O.)	15000
SUB-TOTAL OPTION 1	15000
AS DIRECTED BY CO	800
TOTAL OPTION 1	15800
SCHEDULE A	
BULL CREEK PARKING OVERLOOK	275
BLUE RIDGE PARKWAY (ASHEVILLE WATERSHED)	39860
BLUE RIDGE PARKWAY (AS DIRECTED BY C.O.)	10000
SLIDE AREA	150
SUB-TOTAL SCHEDULE A	50285
AS DIRECTED BY CO	2515
TOTAL SCHEDULE A	52800
OPTION 2	
BLUE RIDGE PARKWAY (AS DIRECTED BY C.O.)	10000
GLASSMINE FALLS PARKING OVERLOOK	110
GRAYBEARD MOUNTAIN PARKING OVERLOOK	110
SUB-TOTAL OPTION 2	10220
AS DIRECTED BY CO	580
TOTAL OPTION 2	10800
OPTION 3	
CRAGGY GARDENS PICNIC PARKING AREA	700
CRAGGY GARDENS PICNIC AREA ACCESS ROAD	575
SUB-TOTAL OPTION 3	1275
AS DIRECTED BY CO	225
TOTAL OPTION 3	1500
OPTION 4	
CRAGGY DOME PARKING OVERLOOK	750
SUB-TOTAL OPTION 4	750
AS DIRECTED BY CO	50
TOTAL OPTION 4	800
PROJECT TOTAL	81700

U.S. DEPARTMENT OF TRANSPORTATION
FEDERAL HIGHWAY ADMINISTRATION
EASTERN FEDERAL LANDS HIGHWAY DIVISION
STERLING, VIRGINIA

BLUE RIDGE PARKWAY AND
CRAGGY GARDEN PICNIC
AREA ACCESS ROAD

EROSION CONTROL SCHEDULES

7/10/2008 11:23:05 AM G:\tra\CT052885\TRA\FINAL_MOD_7\quan_sum_09.dgn

NPS NO.	REG	STATE	PROJECT	SHEET NO.	TOTAL SHEETS
601 43918	SE	NC	PRA-BLRI-2P14	23	166

Roadway Station	Item 20303PA Removal of Asphalt Pavement Sq.Yd.	Item 30404 Portland Cement Ton	Item 30101Z Aggregate Base, Grading C or D Ton	Item 41301B Asphalt Pavement Milling, 1-Inch Depth Sq.Yd.	Item 41301F Asphalt Pavement Milling, 2-Inch Depth Sq.Yd.	Item 41301H Asphalt Pavement Milling, 3-Inch Depth Sq.Yd.	Item 30405AN 6" Full depth Reclamation Sq.Yd.	Item 30405AS 10" Full depth Reclamation Sq.Yd.	Item 41801BAD Superpave Asphalt Concrete Pavement, 1/2" NMSA, $<0.3 \times 10^6$ ESAL, Type 4 Pavement Smoothness Ton	Item 41801BBB Superpave Asphalt Concrete Pavement, 1/2" NMSA, $0.3 \leq 3.0 \times 10^6$ ESAL, Type 2 Pavement Smoothness Ton	Item 41801BBC Superpave Asphalt Concrete Pavement, 1/2" NMSA, $0.3 \leq 3.0 \times 10^6$ ESAL, Type 3 Pavement Smoothness Ton	Item 41801CB Superpave Asphalt Concrete Pavement, 3/4" NMSA, $0.3 \leq 3.0 \times 10^6$ ESAL, Ton	Item 41802AB Superpave Asphalt Concrete Pavement, 3/8" NMSA, $0.3 \leq 3.0 \times 10^6$ ESAL, Wedge and Level Ton
OPTION 2													
BLUE RIDGE PARKWAY													
MP 359 TO MP 360													
359/39·00 - 359/52·80					3197						251	422	
MP 360 TO MP 361													
360/0·00 - 360/53·58					12502						982	1638	
MP 361 TO MP 362													
361/0·00 - 361/39·75					9275						729	1215	
361/39·75 - 361/41·55	440		132			200					33	55	
361/41·55 - 361/52·21					2487						195	326	
MP 362 TO MP 363													
362/0·00 - 362/40·85					4926						749	1231	
362/40·85 - 362/42·30	354		203			161					27	44	
362/42·30 - 362/51·40					1112						167	278	
MP 363 TO MP 364													
363/0·00 - 363/21·15					4935						388	646	
363/21·15 - 363/22·65	367		103			167					26	64	
363/22·65 - 363/53·51					7201						566	943	
MP 364 TO MP 364/21·12													
364/0·00 - 364/21·12					4928						387	645	
BASLSAM GAP PARKING AREA				462					38			64	
GLASSMINE FALLS OVERLOOK				978					81			134	
GRAYBEARD MOUNTAIN OVERLOOK				982					81			135	
SUB-TOTAL OPTION 2	1161	0	438	2422	50563	528	0	0	200	0	4500	7840	
AS DIRECTED BY CO	209	0	52	178	3337	72	0	0	20	0	200	360	400
TOTAL OPTION 2	1370	0	490	2600	53900	600	0	0	220	0	4700	8200	400
OPTION 1													
MP 364/21·12 TO MP 365/00·00													
364/21·12 - 364/52·69					7366						579	965	
MP 365 TO MP 366													
365/0·00 - 365/27·79					4627						509	849	
365/33·83 - 365/51·50					2945						324	387	
MP 366 TO MP 367													
366/0·00 - 366/24·10					5623						442	884	
366/24·10 - 366/53·55		162						7199		1080			
MP 367 TO MP 368													
367/0·00 - 367/53·09		292						12978		1947			
MP 368 TO MP 369													
368/0·00 - 368/20·00		110						4889		733			
368/20·00 - 368/49·72					6604						545	908	
CRAGGY GARDENS VISITOR CENTER	5968	59							243			406	
SUB-TOTAL OPTION 1	5968	623	0	0	27165	0	0	25066	243	3760	2399	4399	
AS DIRECTED BY CO	302	37	0	0	1335	0	0	1234	17	190	101	201	2100
TOTAL OPTION 1	6270	660	0	0	28500	0	0	26300	260	3950	2500	4600	2100

U.S. DEPARTMENT OF TRANSPORTATION
FEDERAL HIGHWAY ADMINISTRATION
EASTERN FEDERAL LANDS HIGHWAY DIVISION
STERLING, VIRGINIA

BLUE RIDGE PARKWAY, CRAGGY GARDEN'S PICNIC AREA ACCESS ROAD AND PARKING OVERLOOKS

PAVING SUMMARIES

7/11/2008 10:25:57 AM G:\Tra\CT052885\TRAFINAL_MOD_7\quan_sum_01.dgn

NPS NO.	REG	STATE	PROJECT	SHEET NO.	TOTAL SHEETS
601 43918	SE	NC	PRA-BLRI-2P14	24	166

Roadway Station	Item 20303PA Removal of Asphalt Pavement Sq.Yd.	Item 30404 Portland Cement Ton	Item 30101Z Aggregate Base, Grading C or D Ton	Item 41301B Asphalt Pavement Milling, 1-Inch Depth Sq.Yd.	Item 41301F Asphalt Pavement Milling, 2-Inch Depth Sq.Yd.	Item 41301H Asphalt Pavement Milling, 3-Inch Depth Sq.Yd.	Item 30405AN 6" Full depth Reclamation Sq.Yd.	Item 30405AS 10" Full depth Reclamation Sq.Yd.	Item 41801BAD Superpave Asphalt Concrete Pavement, 1/2" NMSA, <0.3x10^6 ESAL, Type 4 Pavement Smoothness Ton	Item 41801BBB Superpave Asphalt Concrete Pavement, 1/2" NMSA, 0.3<3.0x10^6 ESAL, Type 2 Pavement Smoothness Ton	Item 41801BBC Superpave Asphalt Concrete Pavement, 1/2" NMSA, 0.3≤3.0x10^6 ESAL, Type 3 Pavement Smoothness Ton	Item 41801CB Superpave Asphalt Concrete Pavement, 3/4" NMSA, 0.3≤3.0x10^6 ESAL, Ton	Item 41802AB Superpave Asphalt Concrete Pavement, 3/8" NMSA, 0.3≤3.0x10 ESAL, Wedge and Level Ton
SCHEDULE A													
MP 369 TO MP 370													
369/0+00 - 369/56+49					12553						1036	1726	
MP 370 TO MP 371													
370/0+00 - 370/02+00					444						37	61	
370/2+00 - 370/49+76		263						11675		1751			
MP 371 TO MP 372													
371/0+00 - 371/55+08		303						13464		2020			
MP 372 TO MP 373													
372/0+00 - 372/51+63		284						12621		1893			
MP 373 TO MP 374													
373/0+00 - 373/50+26		276						12286		1843			
MP 374 TO MP 375													
374/0+00 - 374/20+37		112						4979		747			
374/30+01 - 374/55+32		139						6187		928			
MP 375 TO MP 376													
375/0+00 - 375/4+56		25						1115		167			
LANE PINNACLE OVERLOOK				814					67			112	
BULL CREEK VALLEY OVERLOOK				990					82			136	
SUB-TOTAL SCHEDULE A	0	1402	0	1804	12997	0	0	62327	149	9349	1073	2035	
AS DIRECTED BY CO	0	148	0	96	603	0	0	3173	11	451	127	105	3800
TOTAL SCHEDULE A	0	1550	0	1900	13600	0	0	65500	160	9800	1200	2140	3800
OPTION 3													
CRAGGY GARDENS PICNIC AREA		119					5968		985				
CRAGGY GARDENS PICNIC AREA ACCESS ROAD													
0+12 - 19+85					4384						362	603	
19+85 - 20+50		3						144			128		
20+50 - 24+00					312						64	53	
24+00 - 28+50		23						1000			165		
28+50 - 60+22					3172						523	969	
SUB-TOTAL OPTION 3	0	145	0	0	7868	0	5968	1144	985	0	1242	1625	
AS DIRECTED BY CO	0	15	0	0	432	0	302	56	95	0	58	75	3700
TOTAL OPTION 3	0	160	0	0	8300	0	6270	1200	1080	0	1300	1700	3700
OPTION 4													
CRAGGY DOME PARKING AREA		58					2884		508			53	
SUB-TOTAL OPTION 4	387	58	0	0	0	0	2884	0	508	0	0	53	0
AS DIRECTED BY CO	23	2	0	0	0	0	146	0	52	0	0	7	0
TOTAL OPTION 4	410	60	0	0	0	0	3030	0	560	0	0	60	0
PROJECT TOTAL	8050	2430	490	4500	104300	600	9300	93000	2280	13750	9700	16700	10000

Item 20401 Roadway Excavation			
Location	Cu Yd	Location	Cu Yd
SCHEDULE A	0	OPTION 3	
OPTION 1	0	CRAGGY GARDEN'S ACCESS ROAD	2
OPTION 2		SUB TOTAL OPTION 3	2
BLUE RIDGE PARKWAY		AS DIRECTED BY CO.	3
MP 361		TOTAL OPTION 3	5
361/39+75 - 361/41+55	165		
MP 362		OPTION 4	
362/40+85 - 362/42+30	133	CRAGGY DOME PARKING AREA	96
MP 363		SUB TOTAL OPTION 4	96
363/21+15 - 363/22+65	146	AS DIRECTED BY CO.	14
SUB TOTAL OPTION 2	444	TOTAL OPTION 4	110
AS DIRECTED BY CO.	46		
TOTAL OPTION 2	490	PROJECT TOTAL	605

U.S. DEPARTMENT OF TRANSPORTATION
FEDERAL HIGHWAY ADMINISTRATION
EASTERN FEDERAL LANDS HIGHWAY DIVISION
STERLING, VIRGINIA

BLUE RIDGE PARKWAY, CRAGGY GARDEN'S PICNIC AREA ACCESS ROAD AND PARKING OVERLOOKS

PAVING SUMMARIES

7/11/2008 10:26:04 AM G:\tra\CT052885\TRA\FINAL_MOD_7\quan_sum_01.dgn

NPS NO.	REG	STATE	PROJECT	SHEET NO.	TOTAL SHEETS
601 43918	SE	NC	PRA-BLRI-2P14	25	166

Item 41901B
Asphalt Pavement, Full Depth Patch, Type 2 Summary

Location	Length	Width	Area (Ft^2)
OPTION 1			
BLUE RIDGE PARKWAY			
MP 365			
365/17+85 - 365/18+20	35	8	280
365/18+45 - 365/18+52	7	3	21
SUB-TOTAL OPTION 1			301
AS DIRECTED BY CO.			69
TOTAL OPTION 1			370
TOTAL SCHEDULE A			0
TOTAL OPTION 2			0
OPTION 3			
CRAGGY GARDEN'S PICNIC AREA ACCESS ROAD			
47+80 - 48+00	20	3	60
SUB-TOTAL OPTION 3			60
AS DIRECTED BY CO.			20
TOTAL OPTION 3			80
TOTAL OPTION 4			0
PROJECT TOTAL			450

Item 41902A
Asphalt Pavement, Shallow Depth Patch, Type 1 Summary

Location	Length	Width	Area (Ft^2)
OPTION 2			
BLUE RIDGE PARKWAY			
MP 361			
361/33+03 - 361/33+07	4	6	24
361/40+95 - 361/41+00	5	5	25
361/41+25 - 361/41+35	10	7	70
361/43+15 - 361/43+20	5	5	25
SUB-TOTAL			144
BLUE RIDGE PARKWAY			
MP 362			
362/34+80 - 362/34+85	5	6	30
362/40+47 - 362/40+52	5	2	10
SUB-TOTAL			40
BLUE RIDGE PARKWAY			
MP 363			
363/51+52 - 363/51+57	5	5	25
SUB-TOTAL			25
BLUE RIDGE PARKWAY MP			
MP 364			
364/06+90 - 364/06+95	5	22	110
364/12+80 - 364/12+85	5	5	25
364/20+55 - 364/20-65	10	4	40
SUB-TOTAL			175
SUB-TOTAL OPTION 2			384
AS DIRECTED BY CO.			36
TOTAL OPTION 2			420

Item 41902A
Asphalt Pavement, Shallow Depth Patch, Type 1 Summary

Location	Length	Width	Area (Ft^2)
OPTION 1			
364/30+95 - 364/31+00	5	11	55
364/34+45 - 364/34+50	5	4	20
364/37+80 - 364/38+90	75	4	300
	75	5	375
364/40+87 - 364/40+92	5	3	15
SUB-TOTAL			765
BLUE RIDGE PARKWAY			
MP 365			
365/03+35 - 365/03+75	40	4	160
365/04+05 - 365/04+15	10	4	40
365/04+40 - 365/04+65	25	4	100
365/04+80 - 365/04+85	5	4	20
365/12+90 - 365/12+95	5	4	20
365/15+90 - 365/16+05	15	5	75
365/17+00 - 365/17+20	20	3	60
365/22+00 - 365/22+30	30	3	90
365/23+50 - 365/23+55	5	3	15
365/25+00 - 365/25+15	15	3	45
365/50+55 - 365/50+60	5	22	110
SUB-TOTAL			735
BLUE RIDGE PARKWAY			
MP 366			
366/03+05 - 366/03+15	10	5	50
366/04+65 - 366/04+70	5	5	25
SUB-TOTAL			75
BLUE RIDGE PARKWAY			
MP 368			
368/23+35 - 368/23+55	20	6	120
368/30+75 - 368/31+10	35	6	210
368/31+50 - 368/31+70	3	7	21
368/31+50 - 368/31+70	5	6	30
368/32+25 - 368/33+40	115	3	345
368/35+90 - 368/36+00	10	3	30
368/36+40 - 368/36+60	20	3	60
368/38+75 - 368/38+85	10	3	30
368/39+55 - 368/39+70	15	3	45
SUB-TOTAL			891
SUB-TOTAL OPTION 1			2466
AS DIRECTED BY CO.			334
TOTAL OPTION 1			2800

Item 41902A
Asphalt Pavement, Shallow Depth Patch, Type 1 Summary

Location	Length	Width	Area (Ft^2)
SCHEDULE A			
BLUE RIDGE PARKWAY			
MP 369			
369/00+00 - 369/00+50	50	6	300
369/01+65 - 369/02+00	20	4	80
369/01+65 - 369/02+00	10	8	80
369/01+65 - 369/02+00	15	4	60
369/02+85 - 369/02+95	10	3	30
369/04+50 - 369/04+80	30	5	150
369/05+82 - 369/05+92	10	7	70
369/08+90 - 369/09+00	10	5	50
369/16+80 - 369/17+00	3	6	18
369/16+80 - 369/17+00	3	5	15
369/23+45 - 369/23+60	3	5	15
369/23+45 - 369/23+60	5	6	30
369/27+40 - 369/27+55	15	3	45
369/44+50 - 369/44+60	10	3	30
369/49+77 -369/49+82	5	3	15
SUB-TOTAL			988
SUB-TOTAL SCHEDULE A			988
AS DIRECTED BY CO.			212
TOTAL SCHEDULE A			1200
OPTION 3			
CRAGGY GARDEN'S PICNIC AREA ACCESS ROAD			
30+30 - 30+35	5	22	110
56+50 - 56+55	5	22	110
57+45 - 57+50	5	3	15
60+50 - 60+55	5	22	110
SUB-TOTAL OPTION 3			345
AS DIRECTED BY CO.			35
TOTAL OPTION 3			380
TOTAL OPTION 4			0
PROJECT TOTAL			4800

U.S. DEPARTMENT OF TRANSPORTATION
FEDERAL HIGHWAY ADMINISTRATION
EASTERN FEDERAL LANDS HIGHWAY DIVISION
STERLING, VIRGINIA

BLUE RIDGE PARKWAY AND CRAGGY GARDEN'S PICNIC AREA ACCESS ROAD

PAVEMENT PATCH SUMMARIES

7/10/2008 11:22:07 AM G:\Proj\CT052885\TRAV\FINAL_MOD_7\quan_sum_03.dgn

NPS NO.	REG	STATE	PROJECT	SHEET NO.	TOTAL SHEETS
601 43918	SE	NC	PRA-BLRI-2P14	26	166

Item 63405D
Raised Pavement Markers, Type D

Location	Each
OPTION 1	
BLUE RIDGE PARKWAY	
MP 364	
364/21.12 - 364/24.02	8
SUB-TOTAL OPTION 1	8
AS DIRECTED BY CO.	1
TOTAL OPTION 1	9
TOTAL SCHEDULE A	0
OPTION 2	
BLUE RIDGE PARKWAY	
MP 364	
364/19.52 - 364/21.12	5
SUB-TOTAL OPTION 2	5
AS DIRECTED BY CO.	1
TOTAL OPTION 2	6
TOTAL OPTION 3	0
TOTAL OPTION 4	0
PROJECT TOTAL	15

Item 20301AT
Removal of Raised Pavement Marker

Location	Each
OPTION 1	
BLUE RIDGE PARKWAY	
MP 364	
364/21.12 - 364/23.62	26
SUB-TOTAL OPTION 1	26
AS DIRECTED BY CO.	4
TOTAL OPTION 1	30
TOTAL SCHEDULE A	0
OPTION 2	
BLUE RIDGE PARKWAY	
MP 364	
364/19.90 - 364/21.12	13
SUB-TOTAL OPTION 2	13
AS DIRECTED BY CO.	2
TOTAL OPTION 2	15
TOTAL OPTION 3	0
TOTAL OPTION 4	0
PROJECT TOTAL	45

Item 63401JA
Pavement Marking, Type J, Solid

Location	Ln Ft
OPTION 1	
MP 364	
364/23.02 - 364/23.62	120
SUB-TOTAL OPTION 1	120
AS DIRECTED BY CO.	30
TOTAL OPTION 1	150
TOTAL SCHEDULE A	0
OPTION 2	
MP 364	
364/19.90 - 364/20.50	120
SUB-TOTAL OPTION 2	120
AS DIRECTED BY CO.	30
TOTAL OPTION 2	150
TOTAL OPTION 3	0
TOTAL OPTION 4	0
PROJECT TOTAL	300

Item 63405E
Raised Pavement Markers, Type E

Location	Each
OPTION 1	
BLUE RIDGE PARKWAY	
MP 364	
364/21.12- 364/24.02	17
SUB-TOTAL OPTION 1	17
AS DIRECTED BY CO.	3
TOTAL OPTION 1	20
TOTAL SCHEDULE A	0
OPTION 2	
BLUE RIDGE PARKWAY	
MP 364	
364/19.52- 364/21.12	9
SUB-TOTAL OPTION 2	9
AS DIRECTED BY CO.	1
TOTAL OPTION 2	10
TOTAL OPTION 3	0
TOTAL OPTION 4	0
	30

Item 63401LA
Pavement Markings, Polyurea, Type L, Solid

Location	Ln Ft
OPTION 1	
BLUE RIDGE PARKWAY	
364/23.02 - 364/52.69	5934
MP 365	
365/0.00 - 365/27.81	5562
365/33.84 -365/51.50	3534
MP 366	
366/0.00 - 366/53.55	10710
MP 367	
367/0.00 - 367/27.78	5556
367/28.60 - 367/53.09	4898
MP 368	
368/0.00 - 368/49.72	9944
WHITE STRIPING	
BLUE RIDGE PARKWAY	
364/28.90 - 364/30.25	135
364/31.85 - 364/34.10	225
SUB-TOTAL OPTION 1	46498
AS DIRECTED BY CO.	2302
TOTAL OPTION 1	48800
SCHEDULE A	
YELLOW STRIPING	
BLUE RIDGE PARKWAY	
MP 369	
369/0.00 - 369/56.49	11298
MP 370	
370/0.00 - 370/49.76	9952
MP 371	
371/0.00 - 371/55.08	11016
MP 372	
372/0.00 - 372/1.52	304
372/2.88 - 372/4.12	248
372/5.18 - 372/51.63	9290
MP 373	
373/0.00 - 373/40.38	8076
373/41.38 - 373/42.88	300
373/43.88 - 373/50.26	1276
MP 374	
374/0.00 - 374/20.37	4074
374/30.01 - 374/55.32	5062
MP 375	
375/0.00 - 375/4.56	912
SUB-TOTAL SCHEDULE A	61808
AS DIRECTED BY CO.	2992
TOTAL SCHEDULE A	64800
OPTION 2	
MP 359	
359/39.00 - 359/40.09	218
359/40.85 - 359/41.92	214
359/42.68 - 359/52.80	2024
MP 360	
360/0.00 - 360/19.93	2995
360/19.93 - 360/24.77	579
360/24.77 - 360/53.58	5762
MP 361	
361/0.00 - 361/9.87	1974
361/10.75 - 361/12.51	352
361/13.27 - 361/52.21	7788
MP 362	
362/0.00 - 362/51.40	10280

Location	Ln Ft
OPTION 2 (CONTINUED)	
YELLOW STRIPING	
MP 363	
363/0.00 - 363/20.02	4004
363/21.26 - 363/22.41	230
363/23.35 - 363/33.00	1566
363/33.00 - 363/38.37	695
363/38.87- 363/53.51	2928
MP 364	
364/0.00 - 364/2.92	584
364/4.52 - 364/19.52	3000
SUB-TOTAL OPTION 2	45193
AS DIRECTED BY CO.	2307
TOTAL OPTION 2	47500
CRAGGY GARDENS PICNIC AREA ACCESS ROAD	12014
SUB-TOTAL OPTION 3	12014
AS DIRECTED BY CO.	886
TOTAL OPTION 3	12900
TOTAL OPTION 4	0
PROJECT TOTAL	174000

Item 63401HA
Pavement Markings, Type H, Solid

Location	Ln Ft
OPTION 1	
WHITE STRIPING	
CRAGGY GARDEN VISITOR CENTER	760
BLUE STRIPING	
CRAGGY GARDEN VISITOR CENTER	437
SUB-TOTAL OPTION 1	1197
AS DIRECTED BY CO.	113
TOTAL OPTION 1	1310
TOTAL SCHEDULE A	0
TOTAL OPTION 2	0
OPTION 3	
WHITE STRIPING	
CRAGGY GARDEN PICNIC PARKING AREA	2517
BLUE STRIPING	
CRAGGY GARDEN PICNIC PARKING AREA	395
SUB-TOTAL OPTION 3	2912
AS DIRECTED BY CO.	178
TOTAL OPTION 3	3090
OPTION 4	
CRAGGY DOME PARKING AREA	1000
CRAGGY DOME PARKING AREA	280
SUB-TOTAL OPTION 4	1280
AS DIRECTED BY CO.	20
TOTAL OPTION 4	1300
PROJECT TOTAL	5700

Item 63401LB
Pavement Markings, Polyurea, Type L, Broken

Location	Ln Ft
OPTION 1	
YELLOW STRIPING	
MP 364	
364/2.92 - 364/4.52	320
MP 367	
367/27.78 - 367/28.60	164
SUB-TOTAL OPTION 1	484
AS DIRECTED BY CO.	46
TOTAL OPTION 1	530
SCHEDULE A	
MP 372	
372/1.52 - 372/2.88	272
372/4.12 - 372/5.18	212
MP 373	
373/40.38 - 373/41.38	200
373/42.88 - 373/43.88	200
SUB-TOTAL SCHEDULE A	884
AS DIRECTED BY CO.	86
TOTAL SCHEDULE A	970
OPTION 2	
MP 359	
359/40.09 - 359/40.85	152
359/41.92 - 359/42.68	152
MP 360	
360/10.03 - 360/19.93	990
360/20.88 - 360/24.77	389
MP 361	
361/9.87 - 361/10.75	176
361/12.51 - 361/13.27	152

Location	Ln Ft
OPTION 2 (CONTINUED)	
MP 363	
363/20.02 - 363/21.26	248
363/22.41 - 363/23.35	188
363/29.36 - 363/33.00	364
363/34.08 - 363/38.87	479
SUB-TOTAL OPTION 2	3290
AS DIRECTED BY CO.	110
TOTAL OPTION 2	3400
TOTAL OPTION 3	0
TOTAL OPTION 4	0
PROJECT TOTAL	4900

Item 63406JH
Pavement Markings, Type J, Handicap Symbol

Location	Each
OPTION 1	
CRAGGY GARDEN VISITOR CENTER	4
SUB-TOTAL OPTION 1	4
AS DIRECTED BY CO.	0
TOTAL OPTION 1	4
TOTAL SCHEDULE A	0
TOTAL OPTION 2	0
OPTION 3	
CRAGGY GARDENS PICNIC PARKING AREA	5
SUB-TOTAL OPTION 3	5
AS DIRECTED BY CO.	0
TOTAL OPTION 3	5
OPTION 4	
CRAGGY DOME PARKING AREA	4
SUB-TOTAL OPTION 4	4
AS DIRECTED BY CO.	0
TOTAL OPTION 4	4
PROJECT TOTAL	13

U.S. DEPARTMENT OF TRANSPORTATION
FEDERAL HIGHWAY ADMINISTRATION
EASTERN FEDERAL LANDS HIGHWAY DIVISION
STERLING, VIRGINIA

BLUE RIDGE PARKWAY, CRAGGY GARDEN'S PICNIC AREA ACCESS ROAD AND PARKING OVERLOOKS

PAVEMENT MARKING SUMMARIES

7/10/2008 11:22:17 AM G:\Tro\CT052885\TRAVFINAL_MOD_7\quan_sum_04.dgn

NPS NO.	REG	STATE	PROJECT	SHEET NO.	TOTAL SHEETS
601 43918	SE	NC	PRA-BLRI-2P14	27	166

Location	Item 20701CB Earthwork Geotextile Type III-B Yd²
TOTAL OPTION 1	0
TOTAL SCHEDULE A	0
OPTION 2	
BLUE RIDGE PARKWAY	
361/39+75 - 361/41+55	440
362/40+85 - 362/42+30	354
363/21+15 - 363/22+65	342
SUBTOTAL OPTION 2	1136
AS DIRECTED BY CO	124
TOTAL OPTION 2	1260
OPTION 3	
CRAGGY GARDENS PICNIC AREA ACCESS ROAD	
Sta. 29+30	7
SUBTOTAL OPTION 3	7
AS DIRECTED BY CO	3
TOTAL OPTION 3	10
OPTION 4	
CRAGGY DOME UPPER PARKING AREA	
UNDER SIDEWALK BY LOWER WALL	150
UNDER SIDEWALK ADJACENT TO WALL	40
REMOVE AND RESET WALL	110
SUBTOTAL OPTION 4	300
AS DIRECTED BY CO	30
TOTAL OPTION 4	330
PROJECT TOTAL	1600

Location	Item 25101C Placed Riprap, Class 3 Cu.Yd.	Item 25101D Placed Riprap, Class 4 Cu.Yd.
TOTAL OPTION 1	0	0
TOTAL SCHEDULE A	0	0
TOTAL OPTION 2	0	0
OPTION 3		
CRAGGY GARDENS PICNIC AREA ACCESS ROAD		
Sta. 37+80	7	29
Sta. 39+90	4	
Sta. 40+60	6	
Sta. 41+17	11	
Sta. 56+90		111
SUB-TOTAL OPTION 3	28	140
AS DIRECTED BY CO	2	10
TOTAL OPTION 3	30	150
OPTION 4		
CRAGGY DOME PARKING AREA	7	
SUB-TOTAL OPTION 4	7	
AS DIRECTED BY CO	3	
TOTAL OPTION 4	10	0
PROJECT TOTAL	40	150

U.S. DEPARTMENT OF TRANSPORTATION
FEDERAL HIGHWAY ADMINISTRATION
EASTERN FEDERAL LANDS HIGHWAY DIVISION
STERLING, VIRGINIA

BLUE RIDGE PARKWAY, CRAGGY GARDEN'S PICNIC AREA ACCESS ROAD AND PARKING OVERLOOKS

RIPRAP AND GEOTEXTILE FABRIC SUMMARIES

7/10/2008 11:22:31 AM G:\TraVCT052885\TRAVFINAL_MOD_7\quan_sum_05.dgn

NPS NO.	REG	STATE	PROJECT	SHEET NO.	TOTAL SHEETS
601 43918	SE	NC	PRA-BLRI-2P14	28	166

Location	Item 60809B Recondition Paved Waterway Type 2 Yd 2
OPTION 1	
BLUE RIDGE PARKWAY	
MP 364	
364/23+02 - 364/26+08	107
MP 365	
365/34+09 - 365/38+05	132
365/39+00 - 365/48+45	315
MP 368	
368/10+05 - 368/36+90	1134
SUB-TOTAL OPTION 1	1688
AS DIRECTED BY CO	52
TOTAL OPTION 1	1740
SCHEDULE A	
MP 369	
369/0+00 - 369/22+10	1006
369/22+30 - 369/33+48	360
369/35+00 - 369/40+95	200
MP 370	
370/20+25 - 370/28+10	262
370/40+80 - 370/45+80	167
MP 371	
371/0+25 - 371/2+46	74
MP 373	
373/17+10 - 373/17+80	23
373/41+50 - 373/45+00	117
SUB-TOTAL SCHEDULE A	2209
AS DIRECTED BY CO	151
TOTAL SCHEDULE A	2360
OPTION 2	
364/17+50 - 364/20+30	93
SUB-TOTAL OPTION 2	93
AS DIRECTED BY CO	7
TOTAL OPTION 2	100
TOTAL OPTION 3	0
TOTAL OPTION 4	0
PROJECT TOTAL	4200

Location	Item 20303UA Removal of Asphalt Paved Waterway Yd 2
OPTION 1	
BLUE RIDGE PARKWAY	
MP 364	
364/26+08 - 364/28+33	75
MP 365	
365/1+20 - 365/6+87	410
365/10+50 - 365/28+48	1200
MP 367	
367/16+00 - 367/24+30	280
367/24+00 - 367/27+17	177
SUB-TOTAL OPTION 1	2141
AS DIRECTED BY CO	109
TOTAL OPTION 1	2250
TOTAL SCHEDULE A	0
OPTION 2	
MP 364	
364/7+00 - 364/13+85	228
SUB-TOTAL OPTION 2	228
AS DIRECTED BY CO	22
TOTAL OPTION 2	250
TOTAL OPTION 3	0
TOTAL OPTION 4	0
PROJECT TOTAL	2500

Location	Item 60801E Paved Waterway, Type 5 Yd 2
OPTION 1	
BLUE RIDGE PARKWAY	
MP 364	
364/7+00 - 364/13+85	228
MP 365	
365/1+20 - 365/6+87	410
365/10+50 - 365/28+48	1200
MP 367	
367/16+00 - 367/24+30	280
SUB-TOTAL OPTION 1	2118
AS DIRECTED BY CO	182
TOTAL OPTION 1	2300
TOTAL SCHEDULE A	0
TOTAL OPTION 2	0
TOTAL OPTION 3	0
TOTAL OPTION 4	0
TOTAL	2300

Location	Item 20303UD Removal of Stone Paved Waterway yd 2
OPTION 1	
BLUE RIDGE PARKWAY	
MP 367	
367/24+90 - 367/26+52	54
MP 368	
368/10+05 - 368/36+90	334
SUB-TOTAL OPTION 1	388
AS DIRECTED BY CO	32
TOTAL OPTION 1	420
SCHEDULE A	
MP 369	
369/00+00 - 369/22+10	233
369/22+30 - 369/27+10	67
MP 371	
371/21+00 -371/23+60	87
371/23+70 -371/26+25	85
371/26+40 -371/30+30	130
SUB-TOTAL SCHEDULE A	602
AS DIRECTED BY CO	58
TOTAL SCHEDULE A	660
TOTAL OPTION 2	0
OPTION 3	
CRAGGY GARDENS PICNIC	
AREA ACCESS ROAD	
0+15 - 4+83	156
SUB-TOTAL OPTION 3	156
AS DIRECTED BY CO	14
TOTAL OPTION 3	170
TOTAL OPTION 4	0
PROJECT TOTAL	1250

Location	Item 40201 Minor Asphalt Concrete Ton
OPTION 1	
BLUE RIDGE PARKWAY	
364/49+50 - 364/52+00	14
MP 365	
365/50+69 - 365/51+50	1
MP 366	
366/0+00 - 366/6+00	12
MP 367	
367/9+50 - 367/11+50	4
SUB-TOTAL OPTION 1	31
AS DIRECTED BY CO	9
TOTAL OPTION 1	40
SCHEDULE A	
MP 374	
374/2+12 - 374/2+87	1
SUB-TOTAL SCHEDULE A	1
AS DIRECTED BY CO	1
TOTAL SCHEDULE A	2
OPTION 2	
MP 359	
359/43+75 - 359/50+45	13
MP 360	
360/21+40 - 360/27+72	12
360/26+80 - 360/28+80	4
360/31+48 - 360/34+00	5
360/36+55 - 360/40+20	7
360/46+50 - 360/53+58	14
MP 361	
361/0+00 - 361/3+00	6
361/4+85 - 361/10+00	10
361/20+58 - 361/38+50	34
361/39+40 - 361/41+42	4
MP 362	
362/0+00 - 362/5+15	10
362/0+16 - 362/3+00	5
362/8+73 - 362/12+45	7
MP 364	
364/16+00 - 364/17+50	3
SUB-TOTAL OPTION 2	134
AS DIRECTED BY CO	24
TOTAL OPTION 2	158
TOTAL OPTION 3	0
TOTAL OPTION 4	0
PROJECT TOTAL	200

Location	Item 60801B Paved Waterway, Type 2 Yd 2
OPTION 1	
BLUE RIDGE PARKWAY	
MP 364	
364/26+08 - 364/28+33	75
MP 367	
367/24+00 - 367/27+17	231
367/28+93 - 367/29+11	6
MP 368	
368/10+05 - 368/38+00	396
CRAGGY GARDENS VISITOR CENTER - EAST BAY	12 *
CRAGGY GARDENS VISITOR CENTER - WEST BAY	15 *
SUB-TOTAL OPTION 1	735
AS DIRECTED BY CO	75
TOTAL OPTION 1	810
SCHEDULE A	
MP 369	
369/00+00 - 369/22+10	233
369/22+30 - 369/27+10	67
MP 370	
370/28+10 -370/28+50	13
MP 371	
371/21+00 -371/23+60	87
371/23+70 -371/26+25	85
371/26+40 -371/30+30	130
SUB-TOTAL SCHEDULE A	615
AS DIRECTED BY CO	55
TOTAL SCHEDULE A	670
OPTION 2	
TOTAL OPTION 2	0
OPTION 3	
ACCESS ROAD	
0+15 - 4+83	206
SUB-TOTAL OPTION 3	206
AS DIRECTED BY CO	14
TOTAL OPTION 3	220
OPTION 4	
TOTAL OPTION 4	0
PROJECT TOTAL	1700

* Drainage chutes to be paid for as Paved Waterway, Type 2

U.S. DEPARTMENT OF TRANSPORTATION
FEDERAL HIGHWAY ADMINISTRATION
EASTERN FEDERAL LANDS HIGHWAY DIVISION
STERLING, VIRGINIA

BLUE RIDGE PARKWAY

WATERWAYS SUMMARY

7/10/2008 11:22:41 AM G:\ro\CTO52885\TRAV\FINAL_MOD_7\quan_sum_07.dgn

NPS NO.	REG	STATE	PROJECT	SHEET NO.	TOTAL SHEETS
601 43918	SE	NC	PRA-BLRI-2P14	29	166

Item 60906 Reset Curb (Stone)	
Location	Ln Ft
OPTION 1	
CRAGGY GARDENS VISITOR CENTER	852
SUB-TOTAL OPTION 1	852
AS DIRECTED BY CO	48
TOTAL OPTION 1	900
SCHEDULE A	
LANES PINNACLE OVERLOOK	350
BULL CREEK OVERLOOK	278
SUB-TOTAL SCHEDULE A	628
AS DIRECTED BY CO	32
TOTAL SCHEDULE A	660
OPTION 2	
BALSAM GAP OVERLOOK	233
GLASSMINE FALLS PARKING OVERLOOK	295
GRAYBEARD MOUNTAIN PARKING OVERLOOK	298
SUB-TOTAL OPTION 2	826
AS DIRECTED BY CO	44
TOTAL OPTION 2	870
OPTION 3	
CRAGGY GARDENS PICNIC AREA	2226
CRAGGY GARDENS PICNIC AREA ACCESS ROAD	190
SUB-TOTAL OPTION 3	2416
AS DIRECTED BY CO	144
TOTAL OPTION 3	2560
OPTION 4	
CRAGGY DOME PARKING AREA	477
SUB-TOTAL OPTION 4	477
AS DIRECTED BY CO	23
TOTAL OPTION 4	500
PROJECT TOTAL	5490

ITEM 60903AX Stone Curb, Type 1 16-Inch depth	
Location	Ln Ft
TOTAL OPTION 1	0
TOTAL SCHEDULE A	0
TOTAL OPTION 2	0
TOTAL OPTION 3	0
OPTION 4	
CRAGGY DOME PARKING AREA	70
SUB-TOTAL OPTION 4	70
AS DIRECTED BY CO	30
TOTAL OPTION 4	100
PROJECT TOTAL	100

Item 61505A Asphalt Concrete Wheelchair Ramp	
Location	Yd^2
OPTION 1	
CRAGGY GARDENS VISITOR CENTER	
EAST BAY	17
EAST BAY	19
WEST BAY	21
SUB-TOTAL OPTION 1	57
AS DIRECTED BY CO	8
TOTAL OPTION 1	65
TOTAL SCHEDULE A	0
TOTAL OPTION 2	0
OPTION 3	
CRAGGY GARDENS PICNIC AREA	
UPPER BAY	28
LOWER BAY	16
SUB-TOTAL OPTION 3	44
AS DIRECTED BY CO	6
TOTAL OPTION 3	50
OPTION 4	
CRAGGY DOME PARKING AREA	
UPPER BAY	12
LOWER BAY	12
SUB-TOTAL OPTION 4	24
AS DIRECTED BY CO	1
TOTAL OPTION 4	25
PROJECT TOTAL	140

ITEM 20302RB Removal of Portland Cement Concrete Curb	
Location	Ln Ft
TOTAL OPTION 1	0
TOTAL SCHEDULE A	0
TOTAL OPTION 2	0
OPTION 3	
CRAGGY GARDEN'S PICNIC AREA	2138
SUB-TOTAL OPTION 3	2138
AS DIRECTED BY CO	82
TOTAL OPTION 3	2220
OPTION 4	
CRAGGY DOME PARKING AREA	70*
SUB-TOTAL OPTION 4	70
AS DIRECTED BY CO	10
TOTAL OPTION 4	80
TOTAL	2300

*Removal of asphalt curb to be paid for as removal of portland cement concrete curb

	Item 20303QA Removal of Asphalt Sidewalk	Item 61501A Asphalt Sidewalk
Location	Yd^2	Yd^2
OPTION 1		
CRAGGY GARDENS VISITOR CENTER	527	527
SUB-TOTAL OPTION 1	527	527
AS DIRECTED BY CO	33	28
TOTAL OPTION 1	560	555
SCHEDULE A		
LANES PINNACLE OVERLOOK	122	122
BULL CREEK VALLEY OVERLOOK	74	107
SUB-TOTAL SCHEDULE A	196	229
AS DIRECTED BY CO	14	21
TOTAL SCHEDULE A	210	250
OPTION 2		
GLASSMINE FALLS OVERLOOK	65	65
GRAYBEARD MTN OVERLOOK	62	70
SUB-TOTAL OPTION 2	127	135
AS DIRECTED BY CO	13	10
TOTAL OPTION 2	140	145
OPTION 3		
CRAGGY GARDEN'S PICNIC AREA	1135	1135
SUB-TOTAL OPTION 3	1135	1135
AS DIRECTED BY CO	55	95
TOTAL OPTION 3	1190	1230
OPTION 4		
CRAGGY DOME PARKING AREA UPPER	137	150
CRAGGY DOME PARKING AREA LOWER	137	141
SUB-TOTAL OPTION 4	274	291
AS DIRECTED BY CO	26	29
TOTAL OPTION 4	300	320
PROJECT TOTAL	2400	2500

Item 60915A Wheelstop, Concrete	
Location	Ln. Ft.
TOTAL OPTION 1	0
TOTAL SCHEDULE A	0
TOTAL OPTION 2	0
OPTION 3	
CRAGGY GARDENS PICNIC AREA	8
SUB-TOTAL OPTION 3	8
AS DIRECTED BY CO	2
TOTAL OPTION 3	10
TOTAL OPTION 4	0
PROJECT TOTAL	10

U.S. DEPARTMENT OF TRANSPORTATION
FEDERAL HIGHWAY ADMINISTRATION
EASTERN FEDERAL LANDS HIGHWAY DIVISION
STERLING, VIRGINIA

CRAGGY GARDEN'S PICNIC AREA ACCESS ROAD AND PARKING OVERLOOKS

SIDEWALK, RAMP, WHEELSTOP, AND CURB SUMMARIES

7/10/2008 11:22:51 AM G:\ra\CT052885\TRAV\FINAL_MOD_7\quan_sum_08.dgn

NPS NO.	REG	STATE	PROJECT	SHEET NO.	TOTAL SHEETS
601 43918	SE	NC	PRA-BLRI-2P14	30	166

Location	Item 20301AE Removal of Frame and Grate	Item 20301E Removal of Headwalls	Item 20302H Removal of Pipe Culverts	Item 30305B Ditch Reconditioning	Item 60104AK Concrete, Headwall for 18-Inch Pipe Culvert	Item 60104AM Concrete, Headwall for 24-Inch Pipe Culvert		Item 60201K 18-Inch Pipe Culvert	Item 60201M 24-Inch Pipe Culvert		Item 60203P 36-Inch equivalent dia, pipe, arch or elliptical culvert pipe	Item 60409D Metal Frame and Grate, Type 4	Item 60409FA Metal Frame and Grate, Type 6A	Item 60703A Reconditioning Pipe Culvert	Item 60704 Reconditioning Drainage Structure	Item 60705J Lining 15-Inch Pipe Culvert	Item 60705K Lining 18-Inch Pipe Culvert	Item 60705M Lining 24-Inch Pipe Culvert	Item 62003 Remove and Reset Stone Masonry (Drainage Str.)	Item 62004 Repaint Stone Masonry	Item 62006 Remove and Reset Stone Masonry Headwall	Item 62007AM Stone Masonry Headwall for 24-Inch Pipe Culvert	Item 62007AP Stone Masonry Headwall for 36-Inch Pipe Culvert (equivalent)	Item 62011 Reset Stone Masonry (Repair)
	Each	Each	Ln Ft	Ln Ft	Each	Each		Ln Ft	Ln Ft		Ln Ft	Each	Each	Ln Ft	Each	Ln Ft	Ln Ft	Ln Ft	Cu Yd	Ln Ft	Each	Each	Each	Cu Yd
OPTION 2																								
BLUE RIDGE PARKWAY																								
MP 359																								
359/39+15				10											1									
359/43+32				20										68										
359/50+49				20											1									
359/52+25															1									
MP 360																								
360/03+80				15																				
360/08+50															1									
360/11+45															1									
360/13+97															1									
360/17+45															1									
360/21+42				10											1									
360/25+20															1									
360/34+92				10										70										
360/40+26				20																				
360/49+95				15										49	1									
360/53+51				10										57	1									
MP 361																								
361/10+37														88	1									
361/24+43															1									
361/26+54															1									
361/30+12																								
361/37+51				15																				
361/39+35				30										95										
361/42+66															1									
361/46+58				10											1									
361/49+40														67										
361/52+18															1									
MP 362																								
362/03+21															1									
362/05+79				40										75	1									
362/08+68																								
362/12+50															1									
362/14+86															1									
362/18+93				20											1									
362/21+98				20																				
362/25+05														75	1									
362/27+22															1									
362/30+33				450											1									
362/33+54															1									
362/34+78				20										50	1						1			
362/39+30				20										56										
362/42+80				600											1									
362/46+93				200											1									
SUBTOTAL (OPTION 2)	0	0	0	1555	0	0		0	0		0	0	0	750	29	0	0	0	0	0	1	0	0	0

U.S. DEPARTMENT OF TRANSPORTATION
FEDERAL HIGHWAY ADMINISTRATION
EASTERN FEDERAL LANDS HIGHWAY DIVISION
STERLING, VIRGINIA

BLUE RIDGE PARKWAY

DRAINAGE SUMMARY

7/10/2008 11:32:48 AM G:\FroVCT052885\TRAVFINAL_MOD_7\quan_sum_10a.dgn

NPS NO.	REG	STATE	PROJECT	SHEET NO.	TOTAL SHEETS
601 43918	SE	NC	PRA-BLRI-2P14	31	166

Location	Item 20301AE Removal of Frame and Grate Each	Item 20301E Removal of Headwalls Each	Item 20302H Removal of Pipe Culverts Ln Ft	Item 30305B Ditch Reconditioning Ln Ft	Item 60104AK Concrete, Headwall for 18-Inch Pipe Culvert Each	Item 60104AM Concrete, Headwall for 24-Inch Pipe Culvert Each		Item 60201K 18-Inch Pipe Culvert Ln Ft	Item 60201M 24-Inch Pipe Culvert Ln Ft		Item 60203P 36-Inch equivalent dia. pipe, arch or elliptical culvert pipe Ln Ft	Item 60409D Metal Frame and Grate, Type 4 Each	Item 60409FA Metal Frame and Grate, Type 6A Each	Item 60703A Reconditioning Pipe Culvert Ln Ft	Item 60704 Reconditioning Drainage Structure Each	Item 60705J Lining 15-Inch Pipe Culvert Ln Ft	Item 60705K Lining 18-Inch Pipe Culvert Ln Ft	Item 60705M Lining 24-Inch Pipe Culvert Ln Ft	Item 62003 Remove and Reset Stone Masonry (Drainage Str.) Cu Yd	Item 62004 Repoint Stone Masonry Ln Ft	Item 62006 Remove and Reset Stone Masonry Headwall Each	Item 62007AM Stone Masonry Headwall for 24-Inch Pipe Culvert Each	Item 62007AP Stone Masonry Headwall for 36-Inch Pipe Culvert (equivalent) Each	Item 62011 Reset Stone Masonry (Repair) Cu Yd
OPTION 2 (CONT)																								
BLUE RIDGE PARKWAY																								
MP 363																								
363/00+25															1									
363/07+27				15																				
363/10+27				45																				
363/14+75				20											1									
363/18+43															1									
363/23+91																								
363/27+91			45					45							1						1			
363/32+58				467											1									
363/35+89																								1
363/41+18																								
363/44+08				382											1									
363/47+57				550																				
363/51+50				590											1									
MP364																								
364/09+85				40										47	1									
364/13+88															1									
364/15+45																								
364/18+30				20										60	1									
364/20+54														110	1									
GLASSMINE FALLS PARKING OVERLOOK																								
361/11+00				245										108	1					25				
GRAYBEARD MOUNTAIN PARKING OVERLOOK																								
363/22+70	1											1		40	1									
SUB-TOTAL OPTION 2 (THIS SHEET)	1	0	45	2374	0	0		45	0		0	1	0	365	13	0	0	0	0	25	1	0	0	1
SUB-TOTAL OPTION 2	1	0	45	3929	0	0		45	0		0	1	0	1115	42	0	0	0	0	25	2	0	0	1
AS DIRECTED BY CO	0	0	15	371	0	0		5	0		0	0	0	70	4	0	0	0	0	5	0	0	0	1
TOTAL OPTION 2	1	0	60	4300	0	0		50	0		0	1	0	1185	46	0	0	0	0	30	2	0	0	2
OPTION 1																								
364/23+65															1									
364/41+10															1									
364/45+75															1									
364/51+00															1									
MP 365																								
365/00+28															1									
365/03+43															1									
365/06+86																								
365/10+48															1									
365/14+00																								
365/17+25														31										
365/19+01														31	1									
SUBTOTAL (OPTION 1)	0	0	0	0	0	0		0	0		0	0	0	62	8	0	0	0	0	0	0	0	0	0

U.S. DEPARTMENT OF TRANSPORTATION
FEDERAL HIGHWAY ADMINISTRATION
EASTERN FEDERAL LANDS HIGHWAY DIVISION
STERLING, VIRGINIA

BLUE RIDGE PARKWAY

DRAINAGE SUMMARY

7/10/2008 11:32:57 AM G:\Vro\CT052885\TRA\FINAL_MOD_7\quan_sum_10adgn

Location	Item 20301AE Removal of Frame and Grate	Item 20301E Removal of Headwalls	Item 20302H Removal of Pipe Culverts	Item 30305B Ditch Reconditioning	Item 60104AK Concrete Headwall for 18-Inch Pipe Culvert	Item 60104AM Concrete Headwall for 24-Inch Pipe Culvert		Item 60201K 18-Inch Pipe Culvert	Item 60201M 24-Inch Pipe Culvert		Item 60203P 36-Inch equivalent dia. pipe, arch or elliptical culvert pipe	Item 60409D Metal Frame and Grate, Type 4	Item 60409FA Metal Frame and Grate, Type 6A	Item 60703A Reconditioning Pipe Culvert	Item 60704 Reconditioning Drainage Structure	Item 60705J Lining 15-Inch Pipe Culvert	Item 60705K Lining 18-Inch Pipe Culvert	Item 60705M Lining 24-Inch Pipe Culvert	Item 62003 Remove and Reset Stone Masonry (Drainage Str.)	Item 62004 Repoint Stone Masonry	Item 62006 Remove and Reset Stone Masonry (Headwall)	Item 62007AM Stone Masonry Headwall for 24-Inch Pipe Culvert	Item 62007AP Stone Masonry Headwall for 36-Inch Pipe Culvert (equivalent)	Item 62011 Reset Stone Masonry (Repair)
	Each	Each	Ln Ft	Ln Ft	Each	Each		Ln Ft	Ln Ft		Ln Ft	Each	Each	Ln Ft	Each	Ln Ft	Ln Ft	Ln Ft	Cu Yd	Ln Ft	Each	Each	Each	Cu Yd
OPTION 1 (CONT.)																								
365/22+49															1									
365/25+00															1									
365/28+46															1									
365/32+93														51	1									
365/34+07																								
365/38+05																								
365/39+55																								
365/43+10															1									
365/48+47														55	1									
CRAGGY GARDENS VISITOR CENTER																				1250				
1st Bay															1					750				
364/30+25	1												1											18
2nd Bay																				500				
364/34+00	1												1			37								
BLUE RIDGE PARKWAY																								
MP 366																								
366/03+48				20										42	1									
366/06+00														77	1									
366/07+60				10																				
366/09+48				20											1									
366/13+84															1									
366/17+00															1									
366/20+00				15																50				1
366/23+60				20											1									
366/26+50				35											1									
366/29+89				25																				
366/35+66				20																				
366/38+98				850											1									
366/42+00				10											1									
366/46+19				110																				
366/47+62				40																50				1
366/51+64				10											1			79						
366/53+48																								
MP 367																								
367/01+46																								
367/04+51																								
367/08+89																								
367/11+48																								
367/15+20																								
367/18+40																								
367/22+40															1									
367/24+30				10																				
367/27+36														97										
367/29+13				10																				1
SUBTOTAL (OPTION 1)	2	0	0	1205	0	0		0	0		0	0	2	322	18	37	0	79	0	2600	0	0	0	21

U.S. DEPARTMENT OF TRANSPORTATION

EASTERN FEDERAL LANDS HIGHWAY DIVISION
STERLING, VIRGINIA

BLUE RIDGE PARKWAY

DRAINAGE SUMMARY

7/10/2008 11:33:12 AM G:\Tra\CT052885\TRAVFINAL_MOD_7\quan_sum_10adgn

NPS NO.	REG	STATE	PROJECT	SHEET NO.	TOTAL SHEETS
601 43918	SE	NC	PRA-BLRI-2P14	33	166

Location	Item 20301AE Removal of Frame and Grate	Item 20301E Removal of Headwalls	Item 20302H Removal of Pipe Culverts	Item 30305B Ditch Reconditioning	Item 60104AK Concrete, Headwall for 18-Inch Pipe Culvert	Item 60104AM Concrete, Headwall for 24-Inch Pipe Culvert		Item 60201K 18-Inch Pipe Culvert	Item 60201M 24-Inch Pipe Culvert		Item 60203P 36-Inch equivalent dia., pipe, arch or elliptical culvert pipe	Item 60409D Metal Frame and Grate, Type 4	Item 60409FA Metal Frame and Grate, Type 6A	Item 60703A Reconditioning Pipe Culvert	Item 60704 Reconditioning Drainage Structure	Item 60705J Lining 15-Inch Pipe Culvert	Item 60705K Lining 18-Inch Pipe Culvert	Item 60705M Lining 24-Inch Pipe Culvert	Item 62003 Remove and Reset Stone Masonry (Drainage Str.)	Item 62004 Repoint Stone Masonry	Item 62006 Remove and Reset Stone Masonry (Headwall)	Item 62007AM Stone Masonry Headwall for 24-Inch Pipe Culvert	Item 62007AP Stone Masonry Headwall for 36-Inch Pipe Culvert (equivalent)	Item 62011 Reset Stone Masonry (Repair)
	Each	Each	Ln Ft	Ln Ft	Each	Each		Ln Ft	Ln Ft		Ln Ft	Each	Each	Ln Ft	Each	Ln Ft	Ln Ft	Ln Ft	Cu Yd	Ln Ft	Each	Each	Each	Cu Yd
OPTION 1 (CONT.)																								
BLUE RIDGE PARKWAY																								
367/32+06				40																				
367/36+40																								
367/39+08				20																				
367/41+13				40										49										
367/43+34				20											1									
367/45+04																								1
367/47+87				10										61	1									
367/51+34				40										37										
MP 368																								
368/01+87				20											1									
368/06+58				20										81										
368/15+25				20										44										
368/19+31				20										147										
368/23+82				20																				
368/28+40				10																				
368/32+35														10										
368/34+52				10										47										
368/37+89																								
368/43+18																								
368/47+48																								
SUB-TOTAL OPTION 1 (THIS SHEET)	0	0	0	290	0	0		0	0		0	0	0	476	3	0	0	0	0	0	0	0	0	1
SUB-TOTAL OPTION 1	2	0	0	1495	0	0		0	0		0	0	2	860	29	37	0	79	0	2600	0	0	0	22
AS DIRECTED BY CO	0	0	0	105	0	0		0	0		0	0	0	40	3	13	0	21	0	135	0	0	0	5
TOTAL OPTION 1	2	0	0	1600	0	0		0	0		0	0	2	900	32	50	0	100	0	2735	0	0	0	27
SCHEDULE A																								
MP 369																								
369/03+77				10										42						50				1
369/07+72																								
369/12+97																								
369/22+11																								
369/26+96				10										45										
369/33+49																								
369/40+96																								
369/42+95																								
369/52+83				40										58										
369/56+45																								
MP 370																								
370/07+52				40										75										
370/13+93				20																				
370/18+56																								
370/22+64				15																				
370/28+60				30																				
SUBTOTAL (SCHEDULE A)	0	0	0	165	0	0		0	0		0	0	0	220	0	0	0	0	0	50	0	0	0	1

U.S. DEPARTMENT OF TRANSPORTATION

EASTERN FEDERAL LANDS HIGHWAY DIVISION
STERLING, VIRGINIA

BLUE RIDGE PARKWAY

DRAINAGE SUMMARY

7/10/2008 11:33:21 AM G:\Proj\CT052885\TRAVFINAL_MOD_7\quan_sum_10.dgn

NPS NO.	REG	STATE	PROJECT	SHEET NO.	TOTAL SHEETS
601 / 43918	SE	NC	PRA-BLRI-2P14	34	166

Location	Item 20301AE Removal of Frame and Grate	Item 20301E Removal of Headwalls	Item 20302H Removal of Pipe Culverts	Item 30305B Ditch Reconditioning	Item 60104AK Concrete, Headwall for 18-Inch Pipe Culvert	Item 60104AM Concrete, Headwall for 24-Inch Pipe Culvert		Item 60201K 18-Inch Pipe Culvert	Item 60201M 24-Inch Pipe Culvert		Item 60203P 36-Inch equivalent dia. pipe, arch or elliptical culvert pipe	Item 60409D Metal Frame and Grate, Type 4	Item 60409FA Metal Frame and Grate, Type 6A	Item 60703A Reconditioning Pipe Culvert	Item 60704 Reconditioning Drainage Structure	Item 60705J Lining 15-Inch Pipe Culvert	Item 60705K Lining 18-Inch Pipe Culvert	Item 60705M Lining 24-Inch Pipe Culvert	Item 62003 Remove and Reset Stone Masonry (Drainage Str.)	Item 62004 Repoint Stone Masonry	Item 62006 Remove and Reset Stone Masonry (Headwall)	Item 62007AM Stone Masonry Headwall for 24-Inch Pipe Culvert	Item 62007AP Stone Masonry Headwall for 36-Inch Pipe Culvert (equivalent)	Item 62011 Reset Stone Masonry (Repair)
	Each	Each	Ln Ft	Ln Ft	Each	Each		Ln Ft	Ln Ft		Ln Ft	Each	Each	Ln Ft	Each	Ln Ft	Ln Ft	Ln Ft	Cu Yd	Ln Ft	Each	Each	Each	Cu Yd
SCHEDULE A (CONT.)																								
BLUE RIDGE PARKWAY																								
370/31+50															1									
370/33+40				15										85										
370/40+80																								
370/45+75				20											1									
370/49+56				20										86										
MP 371																								
371/02+50				10											1									
371/06+32															1									
371/11+22																				50				
371/14+07																								
371/20+07																								
371/23+56				20																				
371/26+25				15																				
371/30+30																								
371/34+20				40										42	1									
371/37+25				20										50										
371/40+49				20										110	1									
371/42+56																								
371/43+92				10										68										
371/47+50				20										52										
371/51+24				55																50				
MP 372																								
372/00+75				20										63	1									
372/05+40				45										65						50				
372/11+88				20										64	1									
372/14+33				20										81	1									
372/17+50														75										1
372/19+50				30										142										
372/23+70				15										57	1									
372/26+54				15										68	1									
372/29+45																								
372/32+69														72	1									
372/36+18				20																				
372/39+52				40										98										
372/42+50														82	1									
372/46+16														58	1									
372/49+45														72	1									
MP 373																								
373/00+26				15																				
373/03+43														40	1									
373/07+39														89	1									
373/17+84				30											1									
373/21+05															1									
SUBTOTAL (SCHEDULE A)	0	0	0	535	0	0		0	0		0	0	0	1619	19	0	0	0	0	150	0	0	0	1

U.S. DEPARTMENT OF TRANSPORTATION

EASTERN FEDERAL LANDS HIGHWAY DIVISION
STERLING, VIRGINIA

BLUE RIDGE PARKWAY

DRAINAGE SUMMARY

7/10/2008 11:33:32 AM G:\fra\CT052885\TRAFINAL_MOD_7\quan_sum_10adgn

NPS NO.	REG	STATE	PROJECT	SHEET NO.	TOTAL SHEETS
601 43918	SE	NC	PRA-BLRI-2P14	35	166

Location	Item 20301AE Removal of Frame and Grate	Item 20301E Removal of Headwalls	Item 20302H Removal of Pipe Culverts	Item 30305B Ditch Reconditioning	Item 60104AK Concrete, Headwall for 18-Inch Pipe Culvert	Item 60104AM Concrete, Headwall for 24-Inch Pipe Culvert		Item 60201K 18-Inch Pipe Culvert	Item 60201M 24-Inch Pipe Culvert		Item 60203P 36-Inch equivalent dia, pipe, arch or elliptical culvert pipe	Item 60409D Metal Frame and Grate, Type 4	Item 60409FA Metal Frame and Grate, Type 6A	Item 60703A Reconditioning Pipe Culvert	Item 60704 Reconditioning Drainage Structure	Item 60705J Lining 15-Inch Pipe Culvert	Item 60705K Lining 18-Inch Pipe Culvert	Item 60705M Lining 24-Inch Pipe Culvert	Item 62003 Remove and Reset Stone Masonry (Drainage Str.)	Item 62004 Repaint Stone Masonry	Item 62006 Remove and Reset Stone Masonry (Headwall)	Item 62007AM Stone Masonry Headwall For 24-Inch Pipe Culvert	Item 62007AP Stone Masonry Headwall For 36-Inch Pipe Culvert (equivalent)	Item 62011 Reset Stone Masonry (Repair)
	Each	Each	Ln Ft	Ln Ft	Each	Each		Ln Ft	Ln Ft		Ln Ft	Each	Each	Ln Ft	Each	Ln Ft	Ln Ft	Ln Ft	Cu Yd	Ln Ft	Each	Each	Each	Cu Yd
SCHEDULE A (CONT.)																								
BLUE RIDGE PARKWAY																								
373/24+39				15											1									
373/27+35																								
373/30+35														44	1									
373/34+67				20											1									
373/36+17														72										
373/45+37				60																				
373/50+00				20																				
MP 374																								
374/05+42																				200				
374/10+80				30										95	1									
374/12+79														72	1									
374/15+67														75	1									
374/19+20				20										75										
374/29+35														145	1									
374/31+19				10																				
374/36+94				15																				
374/43+83															1									
374/46+78														149	1									
374/48+12															1									
374/52+80																								
374/55+23														90	1									
SUB-TOTAL SCHEDULE A (THIS SHEET)	0	0	0	190	0	0		0	0		0	0	0	817	11	0	0	0	0	200	0	0	0	0
SUB-TOTAL SCHEDULE A	0	0	0	890	0	0		0	0		0	0	0	2656	30	0	0	0	0	400	0	0	0	2
AS DIRECTED BY CO	0	0	0	110	0	0		0	0		0	0	0	114	3	0	0	0	0	30	0	0	0	1
TOTAL SCHEDULE A	0	0	0	1000	0	0		0	0		0	0	0	2770	33	0	0	0	0	430	0	0	0	3

EASTERN FEDERAL LANDS HIGHWAY DIVISION
STERLING, VIRGINIA

BLUE RIDGE PARKWAY

DRAINAGE SUMMARY

7/10/2008 11:33:43 AM G:\Tro\CT052885\TRA\FINAL_MOD_7\quan_sum_10a.dgn

NPS NO.	REG	STATE	PROJECT	SHEET NO.	TOTAL SHEETS
601 / 43918	SE	NC	PRA-BLRI-2P14	36	166

Location	Item 20301AE Removal of Frame and Grate	Item 20301E Removal of Headwalls	Item 20302H Removal of Pipe Culverts	Item 30305B Ditch Reconditioning	Item 60104AK Concrete, Headwall for 18-Inch Pipe Culvert	Item 60104AM Concrete, Headwall for 24-Inch Pipe Culvert		Item 60201K 18-Inch Pipe Culvert	Item 60201M 24-Inch Pipe Culvert		Item 60203P 36-Inch equivalent dia. pipe, arch or elliptical culvert pipe	Item 60409D Metal Frame and Grate, Type 4	Item 60409FA Metal Frame and Grate, Type 6A	Item 60703A Reconditioning Pipe Culvert	Item 60704 Reconditioning Drainage Structure	Item 60705J Lining 15-Inch Pipe Culvert	Item 60705K Lining 18-Inch Pipe Culvert	Item 60705M Lining 24-Inch Pipe Culvert	Item 62003 Remove and Reset Stone Masonry (Drainage Str.)	Item 62004 Repoint Stone Masonry	Item 62006 Remove and Reset Stone Masonry (Headwall)	Item 62007AM Stone Masonry Headwall For 24-Inch Pipe Culvert	Item 62007AP Stone Masonry Headwall For 36-Inch Pipe Culvert (equivalent)	Item 62011 Reset Stone Masonry (Repair)
	Each	Each	Ln Ft	Ln Ft	Each	Each		Ln Ft	Ln Ft		Ln Ft	Each	Each	Ln Ft	Each	Ln Ft	Ln Ft	Ln Ft	Cu Yd	Ln Ft	Each	Each	Each	Cu Yd
OPTION 3																								
CRAGGY GARDENS ACCESS ROAD																								
Sta. 2+85															1									
Sta. 4+85				20										64										
Sta. 8+55																								
Sta. 14+07				20																				
Sta. 20+85																								
Sta. 24+55																								
Sta. 30+30			43	20	1			43													1			
Sta. 35+25																								
Sta. 37+85		1	35								35												2	
Sta. 41+03			42						42												1	1		
Sta. 43+50				20										62										
Sta. 46+40																								
Sta. 47+90			68		1			68													1			
Sta. 51+72				10																				
Sta. 54+03				10																				
Sta. 56+98			60			1			60										1					
Sta. 58+60																								
Sta. 59+67			70																					
CRAGGY GARDENS PICNIC AREA	2												2		2									
SUBTOTAL OPTION 3	2	1	318	100	2	1		111	102		35	0	2	126	3	0	0	0	1	0	3	1	2	0
AS DIRECTED BY CO	0	0	102	10	0	0		29	18		5	0	0	~~-24~~ 14	1	0	0	0	0	0	0	0	0	0
TOTAL OPTION 3	2	1	420	110	2	1		140	120		40	0	2	~~150~~ 140	4	0	0	0	1	0	3	1	2	0
OPTION 4																								
CRAGGY DOME PARKING OVERLOOK																				50				
Lower bay				222										47	1									
Lower bay	1												1		1		10							
Lower bay	1		48					48				1												
Lower bay	1		37					37					1		1									
Lower bay									68													1		
Western wall																				50				1
Upper bay	1			130									1											
Lower wall																								5
SUBTOTAL OPTION 4	4	0	85	352	0	0		85	68		0	1	3	47	3	0	10	0	0	100	0	1	0	6
AS DIRECTED BY CO	0	0	35	38	0	0		25	12		0	0	0	8	1	0	10	0	0	5	0	0	0	2
TOTAL OPTION 4	4	0	120	390	0	0		110	80		0	1	3	55	4	0	20	0	0	105	0	1	0	8
PROJECT TOTAL	9	1	600	7400	2	1		300	200		40	2	7	~~5060~~ 5050	119	50	20	100	1	3300	5	2	2	40

U.S. DEPARTMENT OF TRANSPORTATION
FEDERAL HIGHWAY ADMINISTRATION
EASTERN FEDERAL LANDS HIGHWAY DIVISION
STERLING, VIRGINIA

BLUE RIDGE PARKWAY, CRAGGY GARDENS PICNIC AREA ACCESS ROAD AND PARKING OVERLOOKS

DRAINAGE SUMMARY

7/10/2008 11:33:53 AM G:\tra\CT052885\TRA\FINAL_MOD_7\quan_sum_10.dgn

REG	REG	STATE	PROJECT	SHEET NO.	TOTAL SHEETS
601 / 43918	SE	NC	PRA-BLRI-2P14	37	166

Sign No.	Text No.	Sign Text	LOCATION Station	LOCATION Side	PANEL SIZE Width (in)	Height (in)	Area (sq ft)	Corner Radii (in)	Border Width (in)	Margin Width (in)	TEXT SIZE Numbers (in)	Upper Case (in)	Lower Case (in)	Series	Color Combination	Quantity	Total Area (sq ft)	Support (No Pay) O+H+L= ft	Remarks
1	G20-1	ROAD WORK NEXT 15 MILES			48	24	15.0	—	—	—	SEE	NOTE 1	—	—	BLACK ON ORANGE	4	32	4x2x14 = 112	SEE "VICINITY MAP" DOUBLE 4"X4" SUPPORT POSTS
2	G20-2A	END ROAD WORK			48	24	8.0	—	—	—	SEE	NOTE 1	—	—	BLACK ON ORANGE	18	144	18x1x13 =234	SEE "TRAFFIC CONTROL PLANS" SINGLE 4"X4" SUPPORT POST
3	G20-4	PILOT CAR FOLLOW ME			48	24	4.5	—	—	—	SEE	NOTE 1	—	—	BLACK ON ORANGE	4	32		
4	R10-6	STOP HERE ON RED			24	36	6.0	—	—	—	SEE	NOTE 1	—	—	BLACK ON WHITE	6	36	6x1x14 = 84	SEE "TRAFFIC CONTROL PLANS" SINGLE 4"X4" SUPPORT POST
5	R11-2	ROAD CLOSED			48	30	10.0	—	—	—	SEE	NOTE 1	—	—	BLACK ON WHITE	3	30		SEE "TRAFFIC CONTROL PLANS" MOUNT ON TYPE III BARRICADE
6	R4-1	DO NOT PASS			24	30	5.0	—	—	—	SEE	NOTE 1	—	—	BLACK ON WHITE	24	120	24x1x13.5 = 324	SEE "TRAFFIC CONTROL PLANS" SINGLE 4"X4" SUPPORT POST
7	R4-2	PASS WITH CARE			24	30	5.0	—	—	—	SEE	NOTE 1	—	—	BLACK ON WHITE	8	40	8x1x13.5 = 108	SEE "TRAFFIC CONTROL PLANS" SINGLE 4"X4" SUPPORT POST
8	W1-4R				30	30	6.25	—	—	—	SEE	NOTE 1	—	—	BLACK ON ORANGE	3	18.75	3x1x13.5 = 40.5	SEE "TRAFFIC CONTROL PLANS" SINGLE 4"X4" SUPPORT POST
9	W13-1	25 MPH			24	24	4	—	—	—	SEE	NOTE 1	—	—	BLACK ON ORANGE	13	52		MOUNT UNDER SIGN SEE "TRAFFIC CONTROL PLANS"
10	W14-3	NO PASSING ZONE			36	48	12.0	—	—	—	SEE	NOTE 1	—	—	BLACK ON ORANGE	16	192	16x2x15 = 480	SEE "TRAFFIC CONTROL PLANS" DOUBLE 4"X4" SUPPORT POSTS
11	W20-1	ROAD WORK 1500 FT			48	48	16.0	—	—	—	SEE	NOTE 1	—	—	BLACK ON ORANGE	4	64	4x2x15 = 120	SEE "TRAFFIC CONTROL PLANS" DOUBLE 4"X4" SUPPORT POSTS
12	W20-1	ROAD WORK 1/2 MILE			48	48	16.0	—	—	—	SEE	NOTE 1	—	—	BLACK ON ORANGE	10	160	10x2x15 = 300	SEE "TRAFFIC CONTROL PLANS" DOUBLE 4"X4" SUPPORT POSTS
13	W20-1	ROAD WORK 1 MILE			48	48	16.0	—	—	—	SEE	NOTE 1	—	—	BLACK ON ORANGE	10	160	10x2x15 = 300	SEE "TRAFFIC CONTROL PLANS" DOUBLE 4"X4" SUPPORT POSTS
* 13	W20-1	ROAD WORK XXX FT			48	48	16.0	—	—	—	SEE	NOTE 1	—	—	BLACK ON ORANGE	2	32	2x2x15 = 60	SEE "TRAFFIC CONTROL PLANS" DOUBLE 4"X4" SUPPORT POSTS
14	W20-1A	ROAD WORK AHEAD			48	48	16.0	—	—	—	SEE	NOTE 1	—	—	BLACK ON ORANGE	8	128	8x2x15 = 240	SEE "TRAFFIC CONTROL PLANS" DOUBLE 4"X4" SUPPORT POSTS
15	W20-4	ONE LANE ROAD 1000 FT			48	48	16.0	—	—	—	SEE	NOTE 1	—	—	BLACK ON ORANGE	4	64	4x2x17 = 136	SEE "TRAFFIC CONTROL PLANS" DOUBLE 4"X4" SUPPORT POSTS
16	W20-4A	ONE LANE ROAD AHEAD			48	48	16.0	—	—	—	SEE	NOTE 1	—	—	BLACK ON ORANGE	6	96	6x2x17 = 204	SEE "TRAFFIC CONTROL PLANS" DOUBLE 4"X4" SUPPORT POSTS
17	W20-7a				36	36	9.0	—	—	—	SEE	NOTE 1	—	—	BLACK ON ORANGE	4	36	4x1x14 = 56	SEE "TRAFFIC CONTROL PLANS" SINGLE 4"X4" SUPPORT POST
18	W21-1a				36	36	9.0	—	—	—	SEE	NOTE 1	—	—	BLACK ON ORANGE	2	18	2x1x14 = 28	SEE "TRAFFIC CONTROL PLANS" SINGLE 4"X4" SUPPORT POST
19	W21-5	SHOULDER WORK			30	30	6.25	—	—	—	SEE	NOTE 1	—	—	BLACK ON ORANGE	3	18.75	3x1x13.5 = 40.5	SEE "TRAFFIC CONTROL PLANS" SINGLE 4"X4" SUPPORT POST
20	W21-6	SURVEY CREW			30	30	6.25	—	—	—	SEE	NOTE 1	—	—	BLACK ON ORANGE	9	56.25	9x1x13.5 = 121.5	SEE "TRAFFIC CONTROL PLANS" SINGLE 4"X4" SUPPORT POST
21	W3-3				36	36	9.0	—	—	—	SEE	NOTE 1	—	—	BLACK ON ORANGE	6	54	6x1x14 =84	SEE "TRAFFIC CONTROL PLANS" SINGLE 4"X4" SUPPORT POST
22	W8-6	TRUCK CROSSING			30	30	6.25	—	—	—	SEE	NOTE 1	—	—	BLACK ON ORANGE	2	12.5	2x1x13.5 = 27	SEE "TRAFFIC CONTROL PLANS" DOUBLE 4"X4" SUPPORT POSTS
23	W6-3				30	30	6.25	—	—	—	SEE	NOTE 1	—	—	BLACK ON ORANGE	8	50	8x1x13.5 = 108	SEE "TRAFFIC CONTROL PLANS" SINGLE 4"X4" SUPPORT POST
24	W8-12	NO CENTER STRIPE			36	36	9.0	—	—	—	SEE	NOTE 1	—	—	BLACK ON ORANGE	8	72	8x1x14 = 112	SEE "TRAFFIC CONTROL PLANS" SINGLE 4"X4" SUPPORT POST
25	W16-2	500 FEET			24	18	3	—	—	—	SEE	NOTE 1	—	—	BLACK ON ORANGE	4	12		MOUNT UNDER SIGN SEE "TRAFFIC CONTROL PLANS"
26	Special	CLOSED			30	18	3.75	1.5	0.625	0.375		4.0		D	BLACK ON WHITE	4	15		MOUNT UNDER OVERLOOK NAME SIGNS AS SHOWN ON "TRAFFIC CONTROL PLANS"
27	Special	BLUE RIDGE PARKWAY UNDER CONSTRUCTION EXPECT DELAYS			102	48	34	1.5	0.625	0.375		4.0		D	BLACK ON ORANGE	4	136	4x2x15 = 120	SEE "VICINITY MAP" DOUBLE 4"X6" SUPPORT POSTS
28	Supplemental plate	NO PASSING NEXT XX MILES			30	18	3.75	1.5	0.625	0.375		4.0		D	BLACK ON ORANGE	8	30		
29	W8-9A	SHOULDER DROP OFF			30	30	6.25	—	—	—	SEE	NOTE 1	—	—	BLACK ON ORANGE	4	25	4x1x13.5 = 54	SEE "TRAFFIC CONTROL PLANS" SINGLE 4"X4" SUPPORT POST
															TOTAL	209	1936.25	3493.5	

NOTES:

1. See "Manual on Uniform Traffic Control Devices" and "Standard Highway Signs" for dimensions.
2. Lengths of post are estimated. Verify lengths in field and submit to CO prior to ordering.
3. See "Traffic Control Plans" for approximate locations of signs. Get approval from CO for final locations.

* SEE DETAIL E635-C

U.S. DEPARTMENT OF TRANSPORTATION
FEDERAL HIGHWAY ADMINISTRATION
EASTERN FEDERAL LANDS HIGHWAY DIVISION
STERLING, VIRGINIA

BLUE RIDGE PARKWAY

SCHEDULE "A",
OPTION 1, 2, & 4 CONSTRUCTION
SIGNS SCHEDULE

$$$$DATE$$$$ $TIME$ $$$$DGN$$$$

REG	REG	STATE	PROJECT	SHEET NO.	TOTAL SHEETS
601 / 43918	SE	NC	PRA-BLRI-2P14	38	166

Sign No.	Text No.	Sign Text	LOCATION		PANEL SIZE						TEXT SIZE				Color Combination	Quantity	Total Area (sq ft)	Support (No Pay) O=W+L+ ft	Remarks
			Station	Side	Width (in)	Height (in)	Area (sq ft)	Corner Radii (in)	Border Width (in)	Margin Width (in)	Numbers (in)	Upper Case (in)	Lower Case (in)	Series					
14	W20-1A	ROAD WORK AHEAD			48	48	16.0				SEE NOTE 1				BLACK ON ORANGE	1	16	1x2x15 = 30	SEE "TRAFFIC CONTROL PLANS" DOUBLE 4"X4" SUPPORT POSTS
19	W21-5	SHOULDER WORK			30	30	6.25				SEE NOTE 1				BLACK ON ORANGE	1	6.25	1x1x13.5 = 13.5	SEE "TRAFFIC CONTROL PLANS" SINGLE 4"X4" SUPPORT POST
22	W8-6	TRUCK CROSSING			30	30	6.25				SEE NOTE 1				BLACK ON ORANGE	2	12.5	2x1x13.5 = 27	SEE "TRAFFIC CONTROL PLANS" SINGLE 4"X4" SUPPORT POST
26	Special	CLOSED			30	18	3.75	1.5	0.625	0.375		4.0		D	BLACK ON WHITE	2	7.5		MOUNT UNDER OVERLOOK NAME SIGNS AS SHOWN ON "TRAFFIC CONTROL PLANS"
															TOTAL	6	42.25	70.5	

NOTES:

1. See "Manual on Uniform Traffic Control Devices" and "Standard Highway Signs" for dimensions.
2. Lengths of post are estimated. Verify lengths in field and submit to CO prior to ordering.
3. See "Traffic Control Plans" for approximate locations of signs. Get approval from CO for final locations.

U.S. DEPARTMENT OF TRANSPORTATION
FEDERAL HIGHWAY ADMINISTRATION
EASTERN FEDERAL LANDS HIGHWAY DIVISION
STERLING, VIRGINIA

BLUE RIDGE PARKWAY

OPTION 3 CONSTRUCTION
SIGNS SCHEDULE

7/10/2008 11:34:54 AM G:\tra\CT052885\TRA\FINAL_MOD_7\constr_sign_schedule.dgn

NPS NO.	REG	STATE	PROJECT	SHEET NO.	TOTAL SHEETS
601 / 43918	SE	NC	PRA-BLRI-2P14	39	166

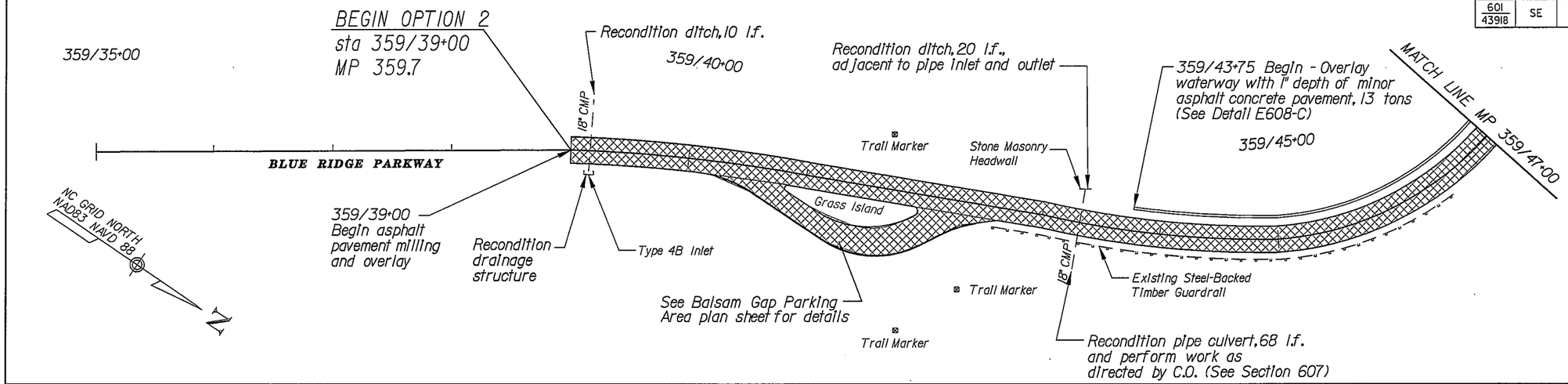

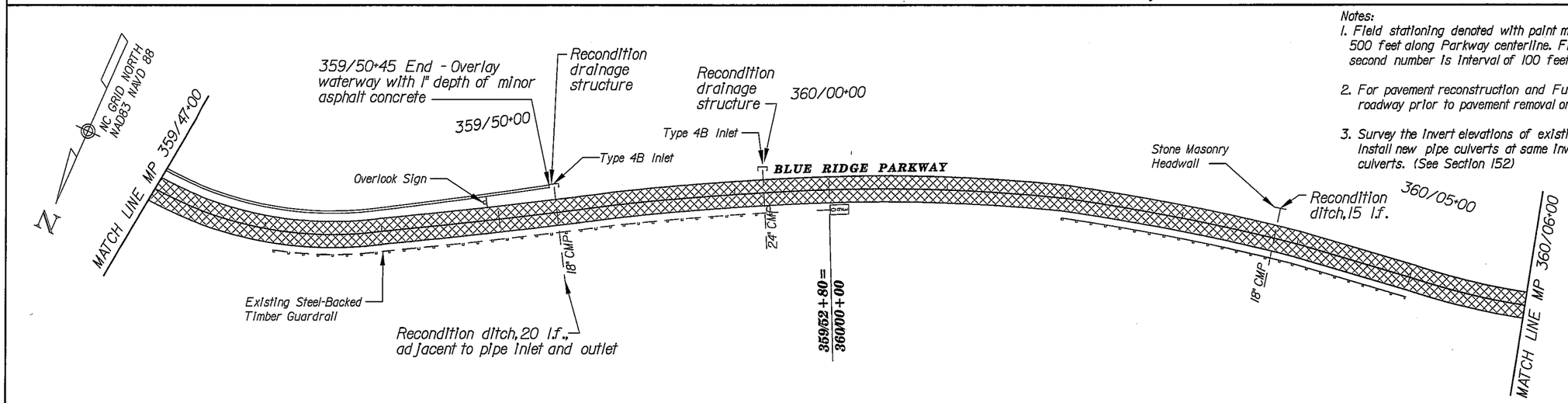

Notes:

1. Field stationing denoted with paint marks every 50 feet and pk nails every 500 feet along Parkway centerline. First number in stationing is milepost, and second number is interval of 100 feet lengths.
2. For pavement reconstruction and Full Depth Reclamation areas, survey existing roadway prior to pavement removal or reclamation, in accordance with Section 152.
3. Survey the invert elevations of existing pipe culverts prior to removal. Install new pipe culverts at same invert elevations as existing pipe culverts. (See Section 152)

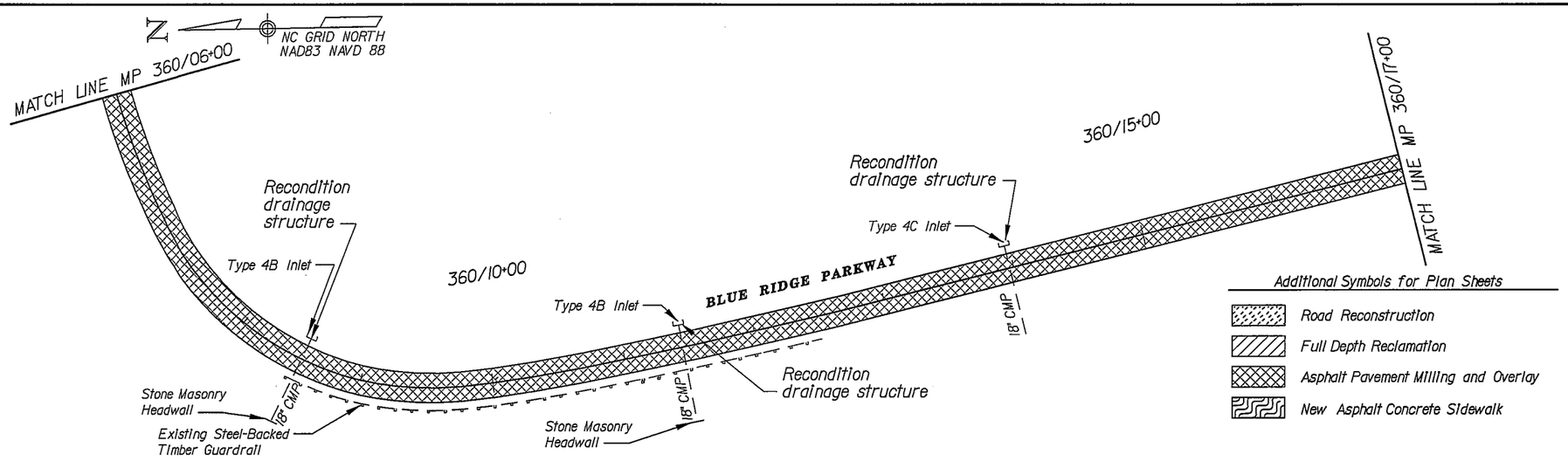

Additional Symbols for Plan Sheets

- Road Reconstruction
- Full Depth Reclamation
- Asphalt Pavement Milling and Overlay
- New Asphalt Concrete Sidewalk

0 50 100
SCALE IN FEET

U.S. DEPARTMENT OF TRANSPORTATION
FEDERAL HIGHWAY ADMINISTRATION
EASTERN FEDERAL LANDS HIGHWAY DIVISION
STERLING, VIRGINIA

BLUE RIDGE PARKWAY
MP 359.7 TO MP 360.3
PLAN

7/10/2008 11:55:59 AM G:\tra\CT052885\TRA\FINAL_MOD_7\Plan_blueridge_01.dgn

NPS NO.	REG	STATE	PROJECT	SHEET NO.	TOTAL SHEETS
601 / 43918	SE	NC	PRA-BLRI-2P14	40	166

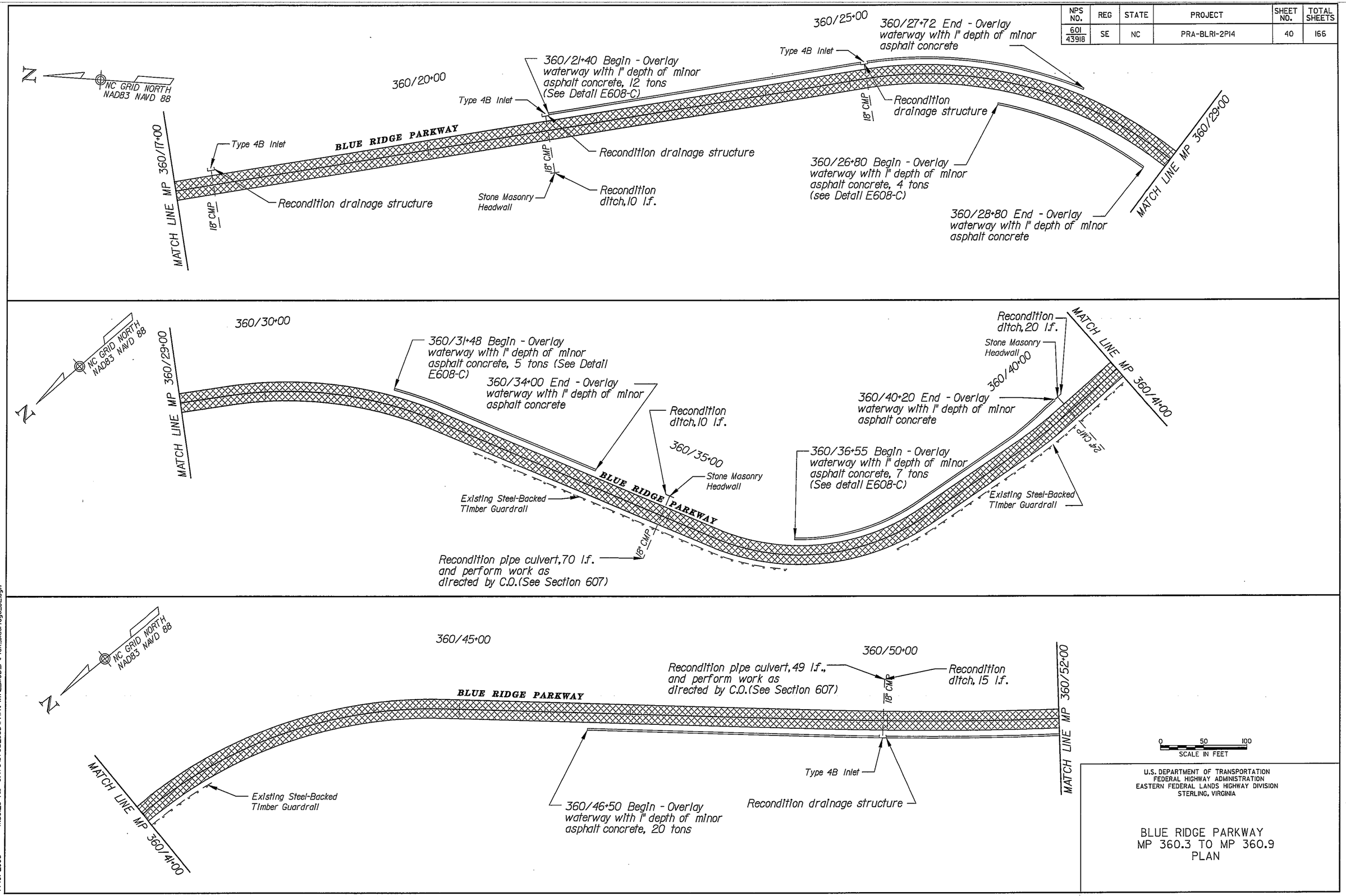

U.S. DEPARTMENT OF TRANSPORTATION
FEDERAL HIGHWAY ADMINISTRATION
EASTERN FEDERAL LANDS HIGHWAY DIVISION
STERLING, VIRGINIA

BLUE RIDGE PARKWAY
MP 360.3 TO MP 360.9
PLAN

7/10/2008 11:56:20 AM G:\tra\CT052885\TRA\FINAL_MOD_7\Plan_blueridge_02.dgn

NPS NO.	REG	STATE	PROJECT	SHEET NO.	TOTAL SHEETS
601 / 43918	SE	NC	PRA-BLRI-2P14	41	166

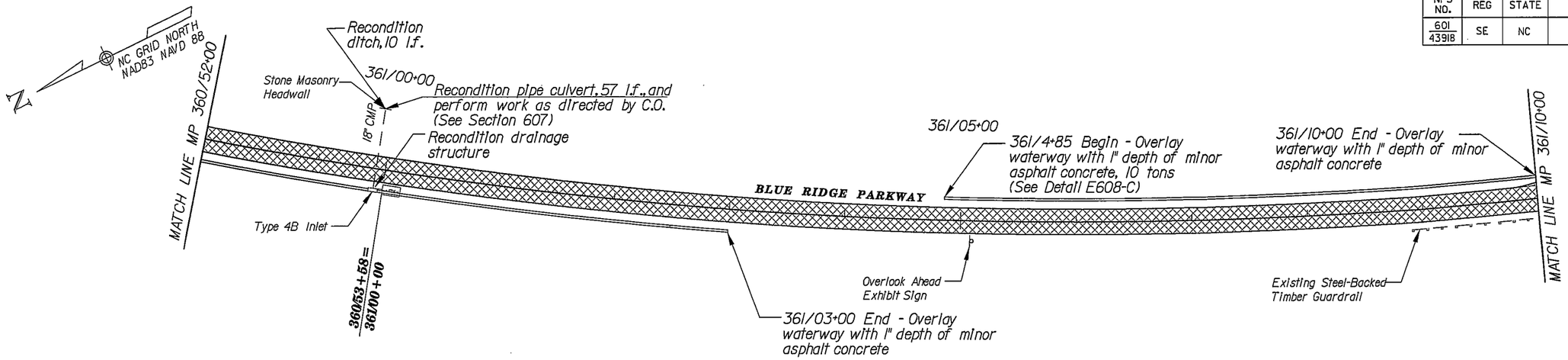

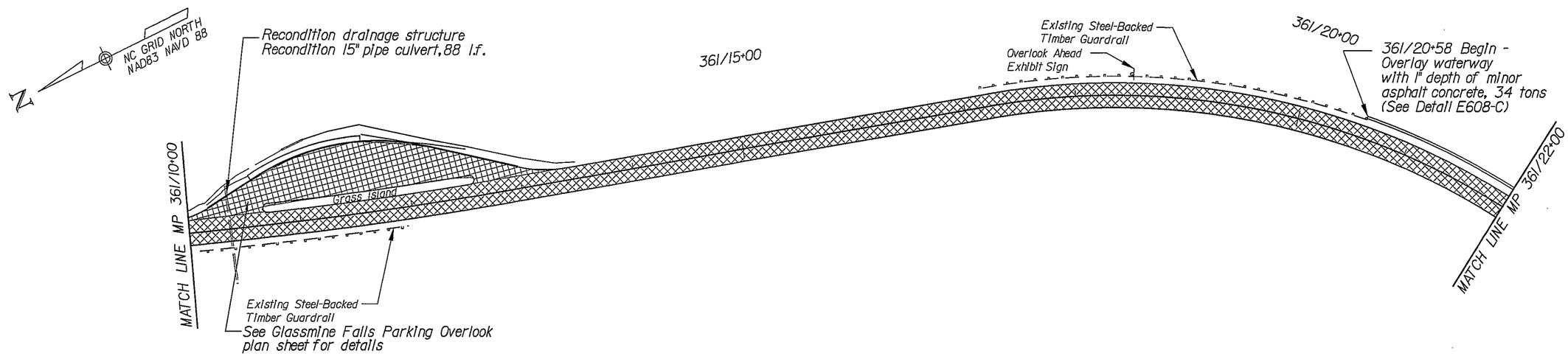

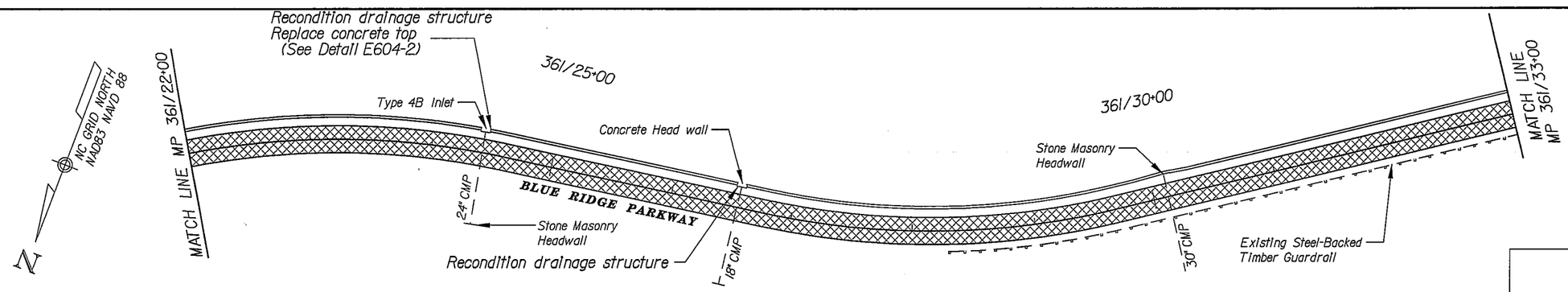

0 50 100
SCALE IN FEET

U.S. DEPARTMENT OF TRANSPORTATION
FEDERAL HIGHWAY ADMINISTRATION
EASTERN FEDERAL LANDS HIGHWAY DIVISION
STERLING, VIRGINIA

BLUE RIDGE PARKWAY
MP 360.9 TO MP 361.6
PLAN

7/10/2008 11:56:29 AM G:\traCT052885\TRA\FINAL_MOD_7\Plan_blueridge_03.dgn

NPS NO.	REG	STATE	PROJECT	SHEET NO.	TOTAL SHEETS
601 / 43918	SE	NC	PRA-BLRI-2P14	42	166

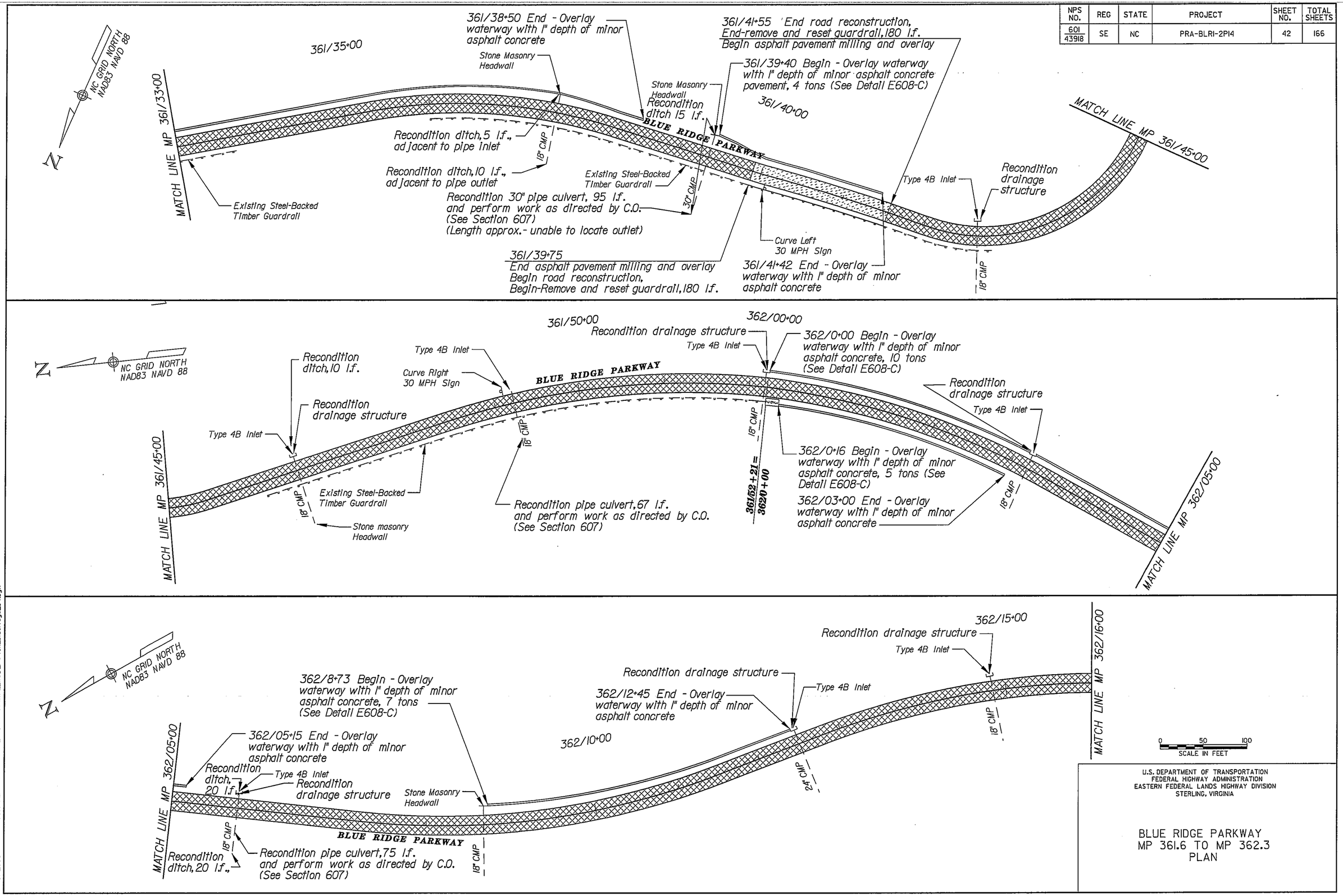

U.S. DEPARTMENT OF TRANSPORTATION
FEDERAL HIGHWAY ADMINISTRATION
EASTERN FEDERAL LANDS HIGHWAY DIVISION
STERLING, VIRGINIA

BLUE RIDGE PARKWAY
MP 361.6 TO MP 362.3
PLAN

7/10/2008 11:56:41 AM G:\Pro\CT052885\TRAV-FINAL_MOD_7\Plan_blueridge_04.dgn

NPS NO.	REG	STATE	PROJECT	SHEET NO.	TOTAL SHEETS
601 / 43918	SE	NC	PRA-BLRI-2P14	43	166

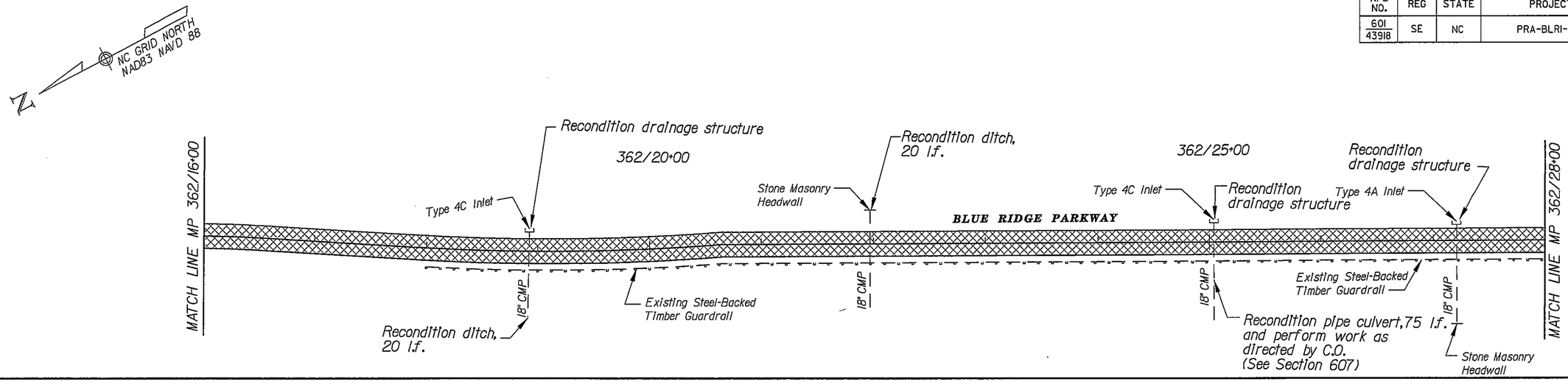

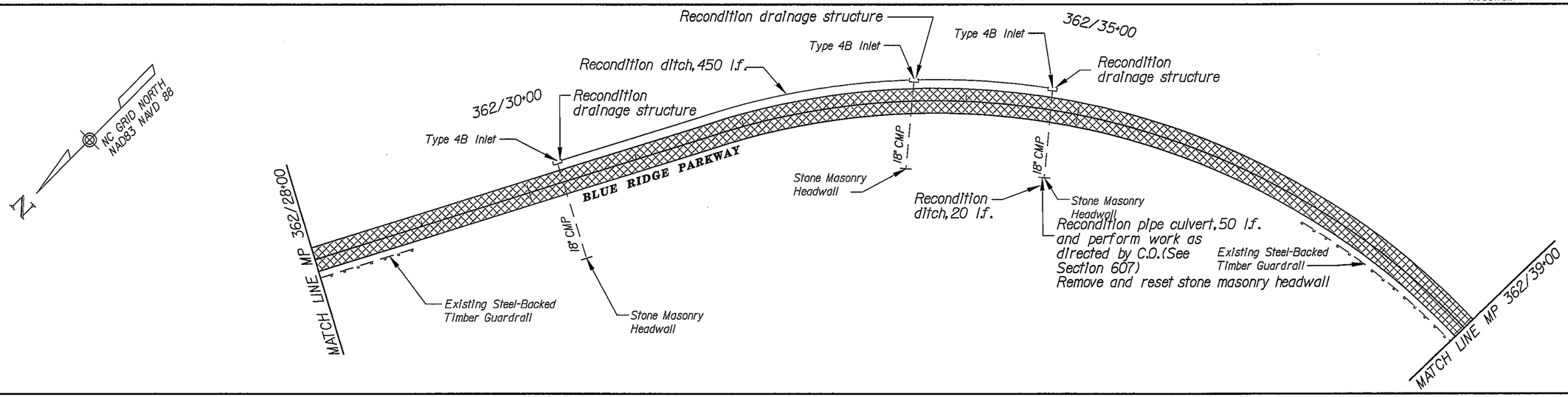

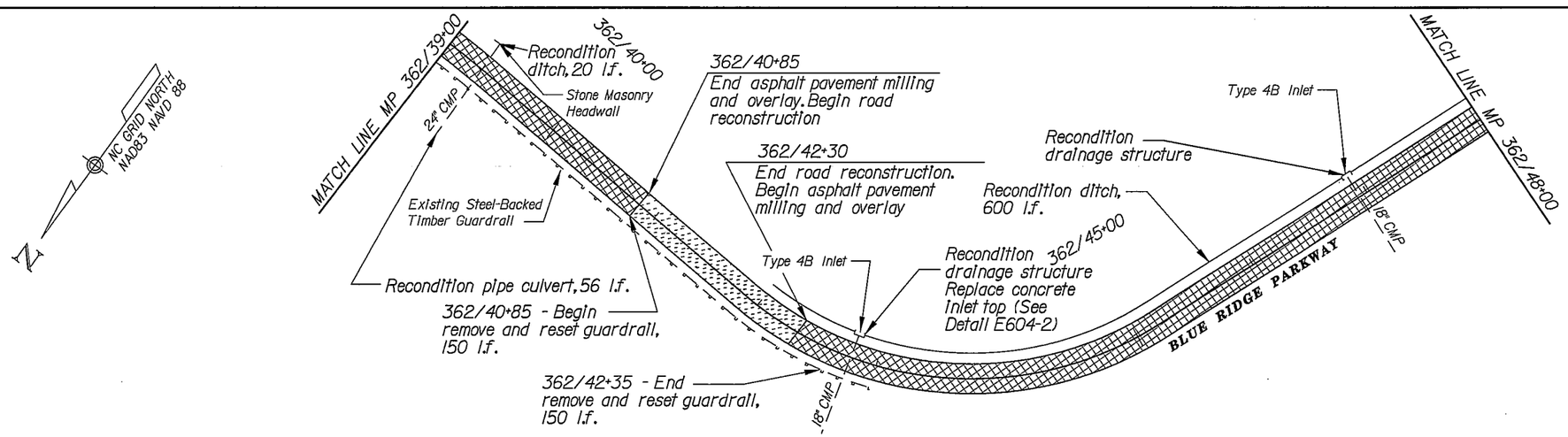

0 50 100
SCALE IN FEET

U.S. DEPARTMENT OF TRANSPORTATION
FEDERAL HIGHWAY ADMINISTRATION
EASTERN FEDERAL LANDS HIGHWAY DIVISION
STERLING, VIRGINIA

BLUE RIDGE PARKWAY
MP 362.3 TO MP 362.9
PLAN

7/10/2008 11:56:53 AM G:\tra\CT052885\TRA\FINAL_MOD_7\Plan_blueridge_05.dgn

NPS NO.	REG	STATE	PROJECT	SHEET NO.	TOTAL SHEETS
601 / 43918	SE	NC	PRA-BLRI-2P14	44	166

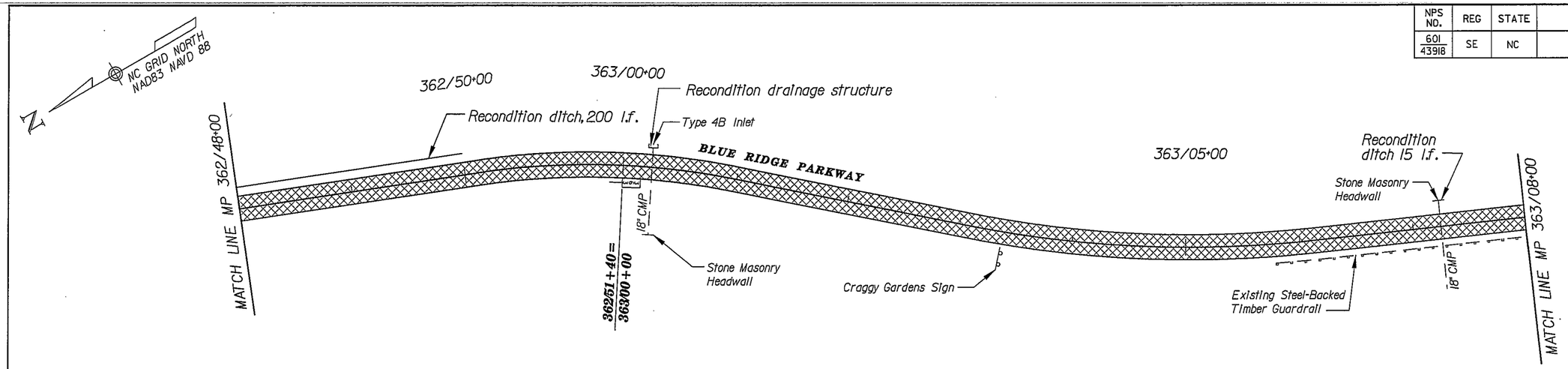

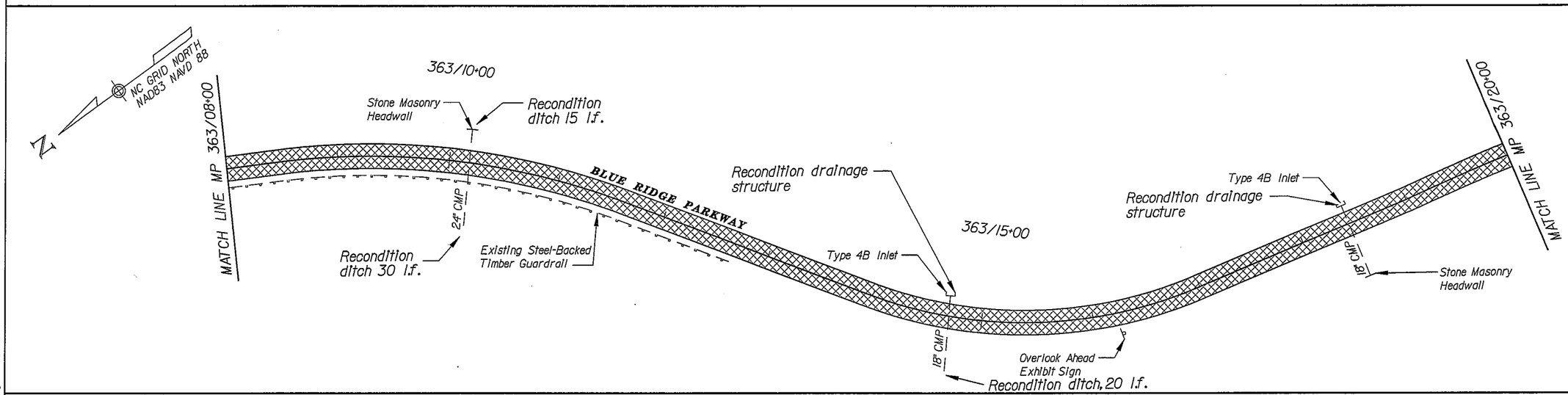

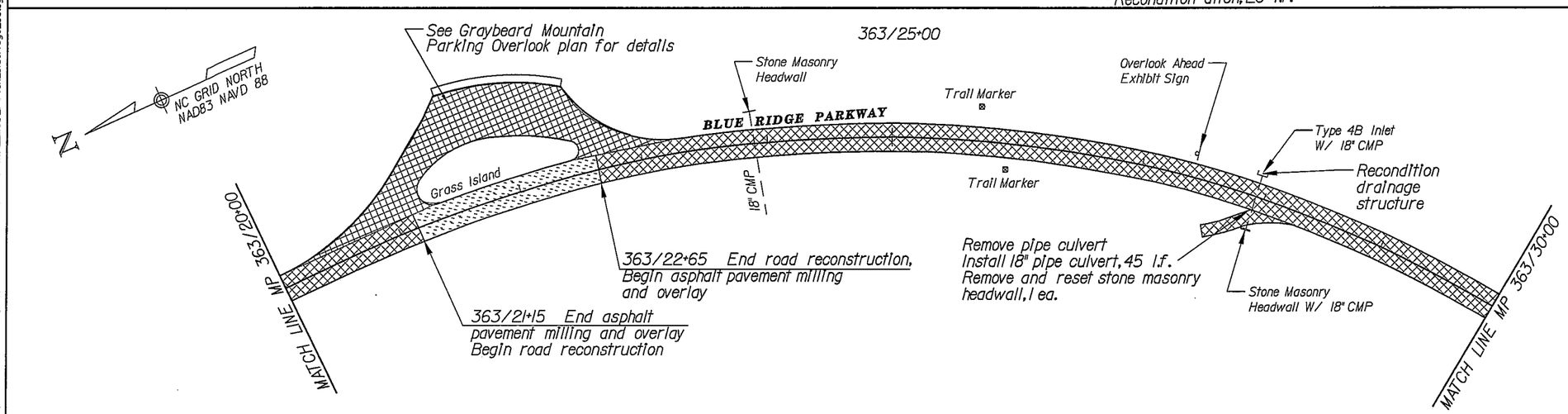

0 50 100
SCALE IN FEET

U.S. DEPARTMENT OF TRANSPORTATION
FEDERAL HIGHWAY ADMINISTRATION
EASTERN FEDERAL LANDS HIGHWAY DIVISION
STERLING, VIRGINIA

BLUE RIDGE PARKWAY
MP 362.9 TO MP 363.6
PLAN

7/10/2008 11:57:02 AM G:\rra\CT052885\TRAVFINAL_MOD_7\Plan_blueridge_06.dgn

NPS NO.	REG	STATE	PROJECT	SHEET NO.	TOTAL SHEETS
601 / 43918	SE	NC	PRA-BLRI-2P14	45	166

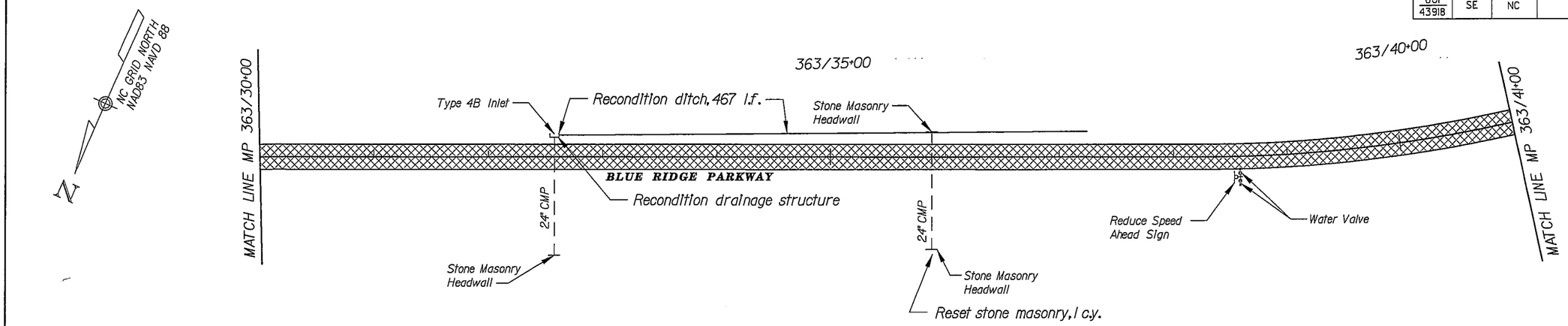

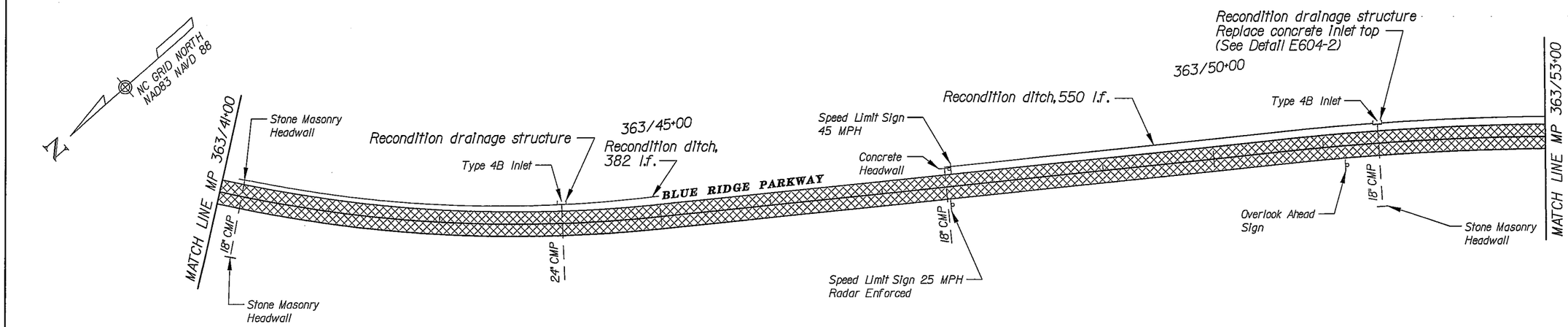

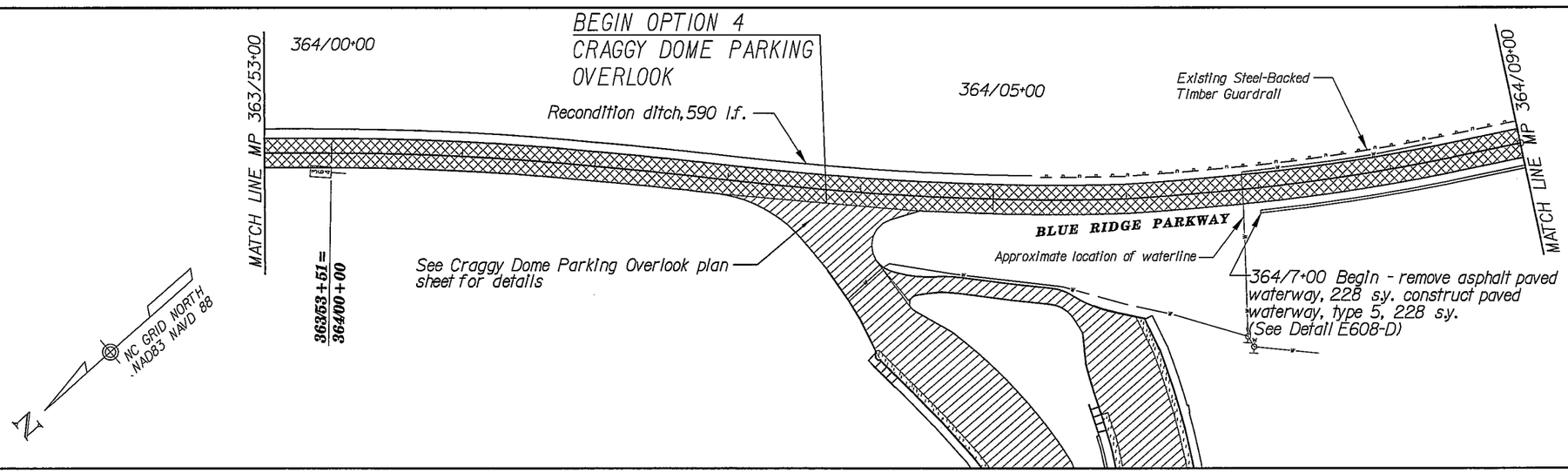

0 50 100
SCALE IN FEET

U.S. DEPARTMENT OF TRANSPORTATION
FEDERAL HIGHWAY ADMINISTRATION
EASTERN FEDERAL LANDS HIGHWAY DIVISION
STERLING, VIRGINIA

BLUE RIDGE PARKWAY
MP 363.6 TO MP 364.2
PLAN

7/10/2008 11:57:10 AM G:\traCT052885\TRAFINAL_MOD_7\Plan_blueridge_07.dgn

NPS NO.	REG	STATE	PROJECT	SHEET NO.	TOTAL SHEETS
601 / 43918	SE	NC	PRA-BLRI-2P14	46	166

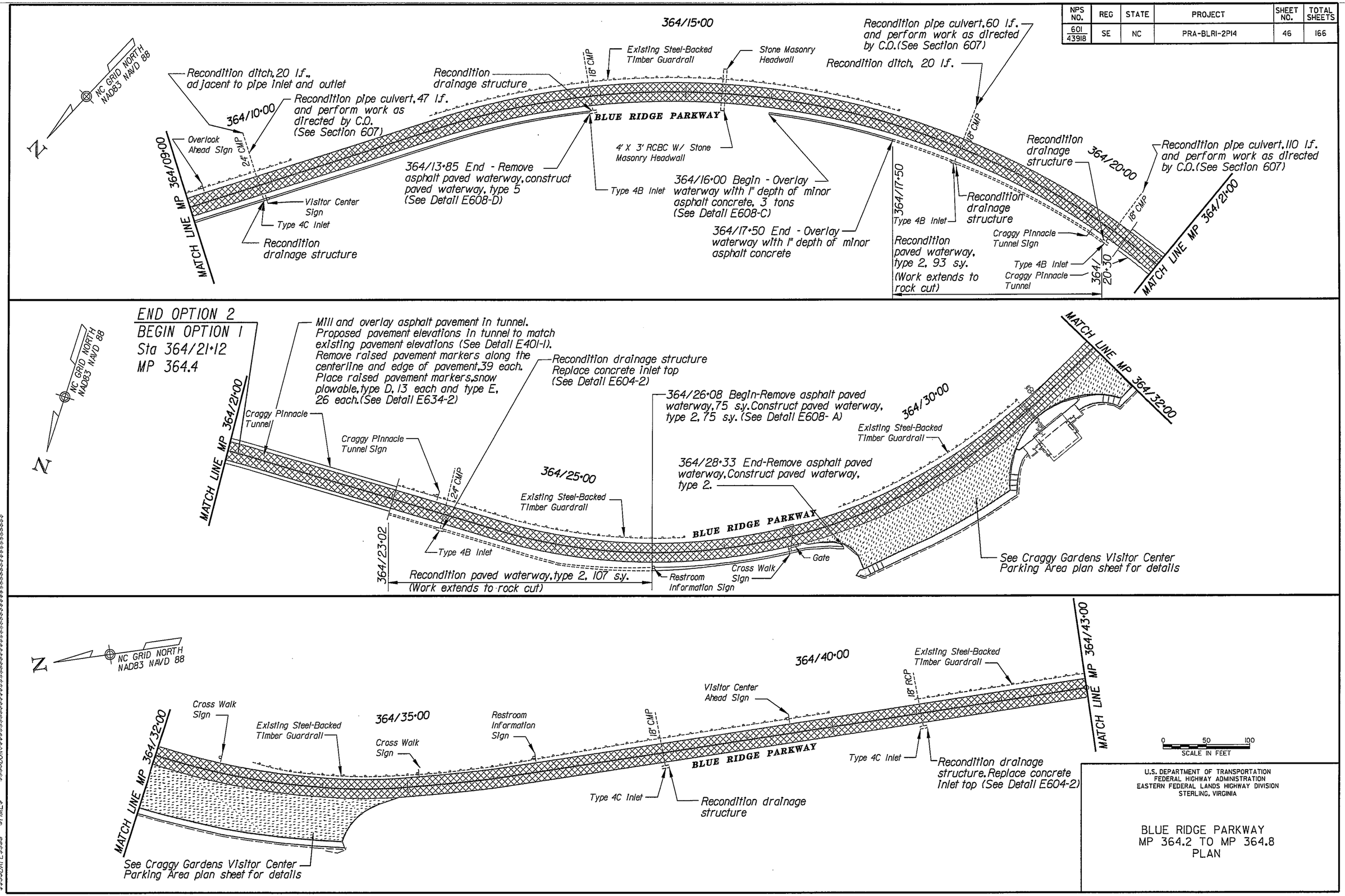

U.S. DEPARTMENT OF TRANSPORTATION
FEDERAL HIGHWAY ADMINISTRATION
EASTERN FEDERAL LANDS HIGHWAY DIVISION
STERLING, VIRGINIA

BLUE RIDGE PARKWAY
MP 364.2 TO MP 364.8
PLAN

NPS NO.	REG	STATE	PROJECT	SHEET NO.	TOTAL SHEETS
601 / 43918	SE	NC	PRA-BLRI-2P14	47	166

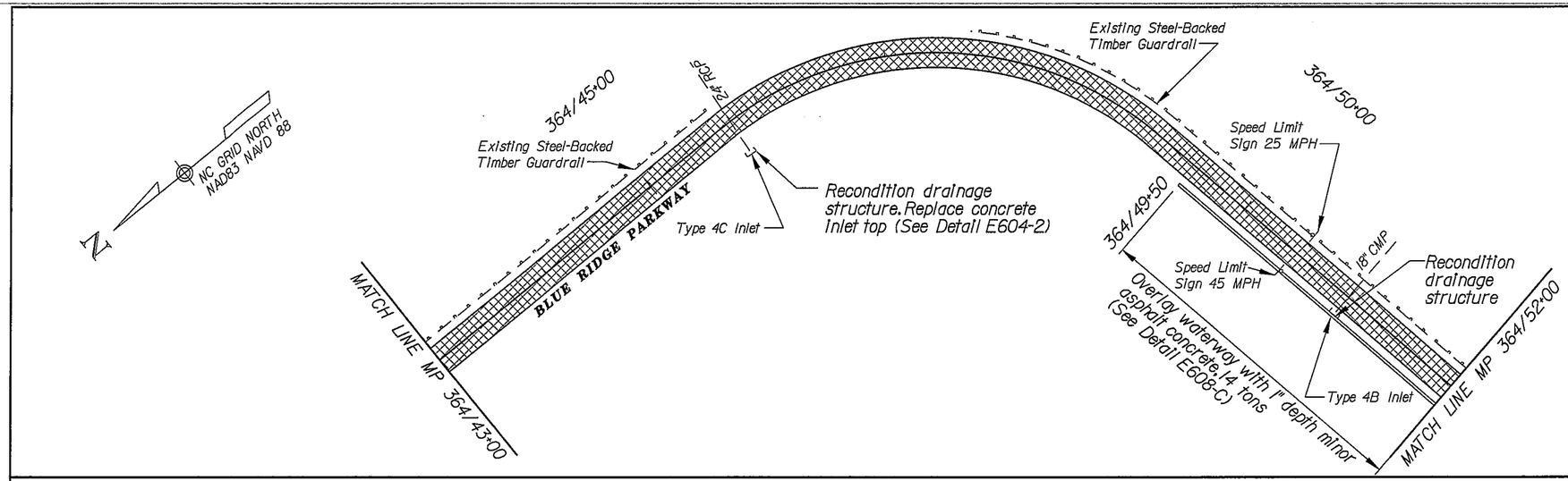

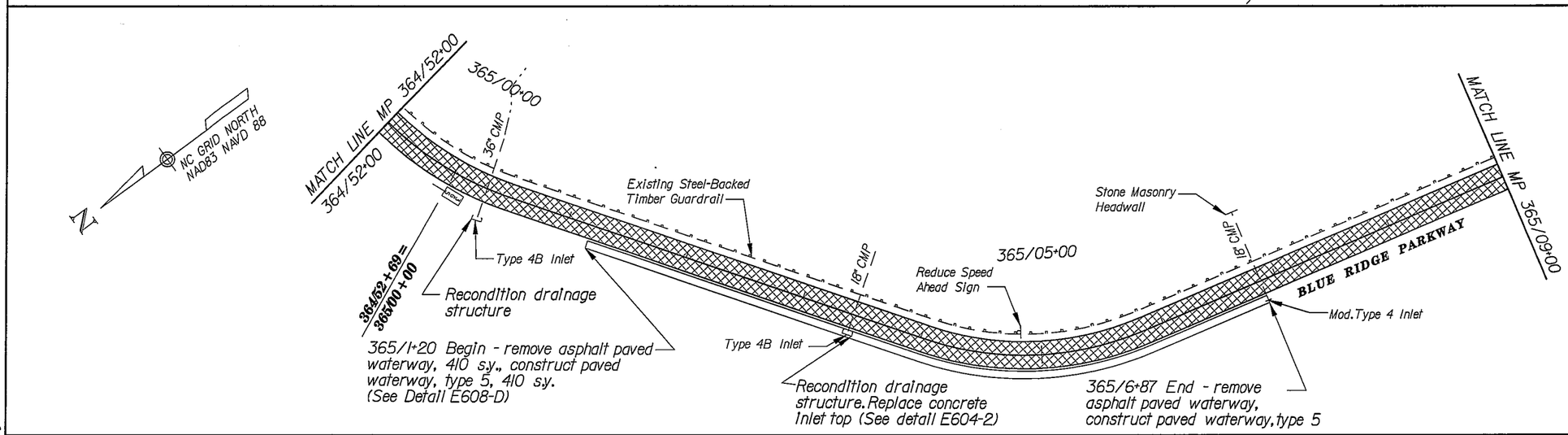

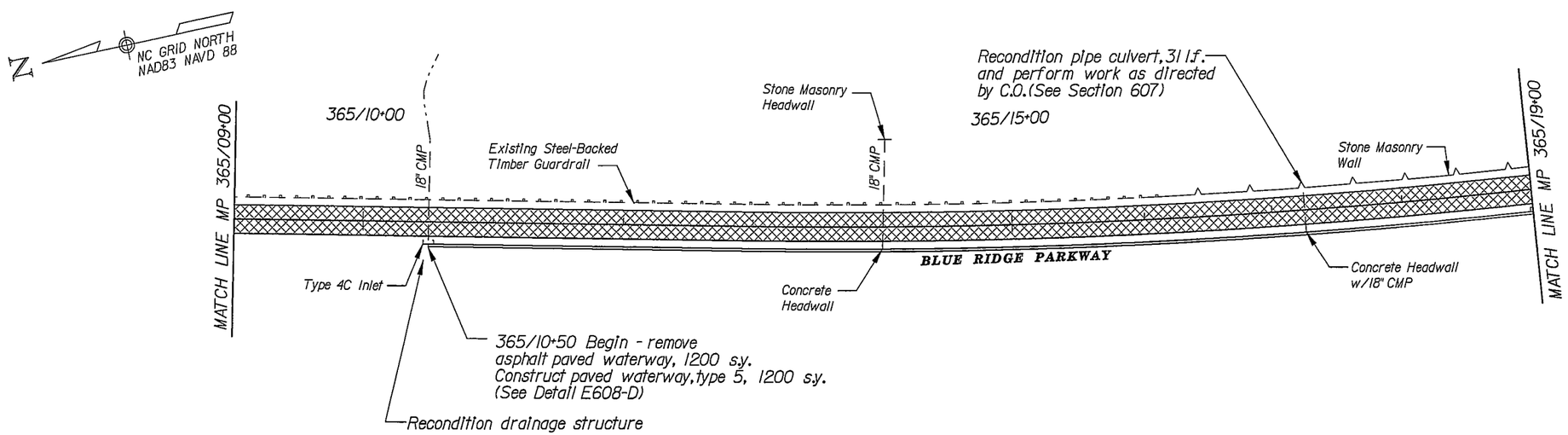

0 50 100
SCALE IN FEET

U.S. DEPARTMENT OF TRANSPORTATION
FEDERAL HIGHWAY ADMINISTRATION
EASTERN FEDERAL LANDS HIGHWAY DIVISION
STERLING, VIRGINIA

BLUE RIDGE PARKWAY
MP 364.8 TO MP 365.4
PLAN

7/10/2008 11:57:34 AM G:\Proj\CT052885\TRAV\FINAL_MOD_7\Plan_blueridge_09.dgn

NPS NO.	REG	STATE	PROJECT	SHEET NO.	TOTAL SHEETS
601 / 43918	SE	NC	PRA-BLRI-2P14	48	166

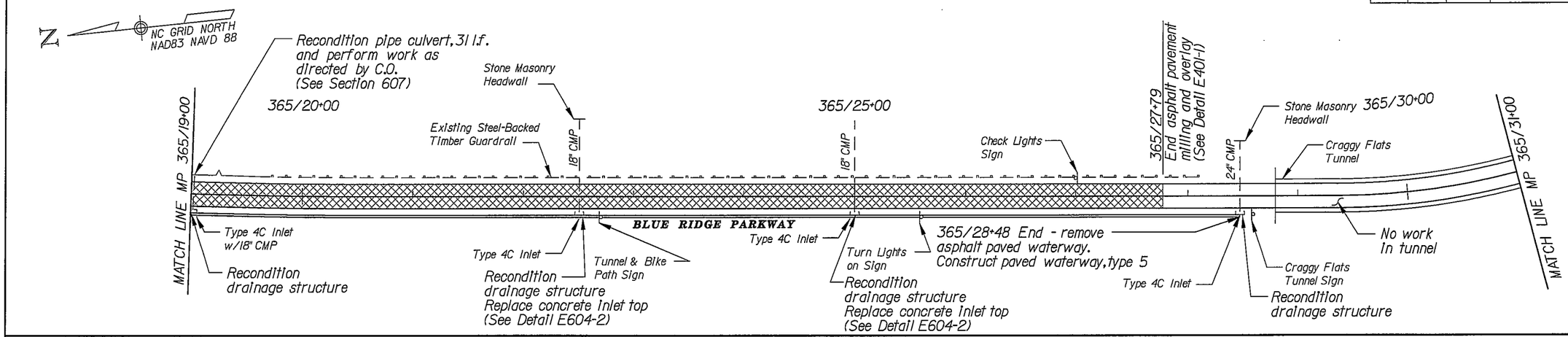

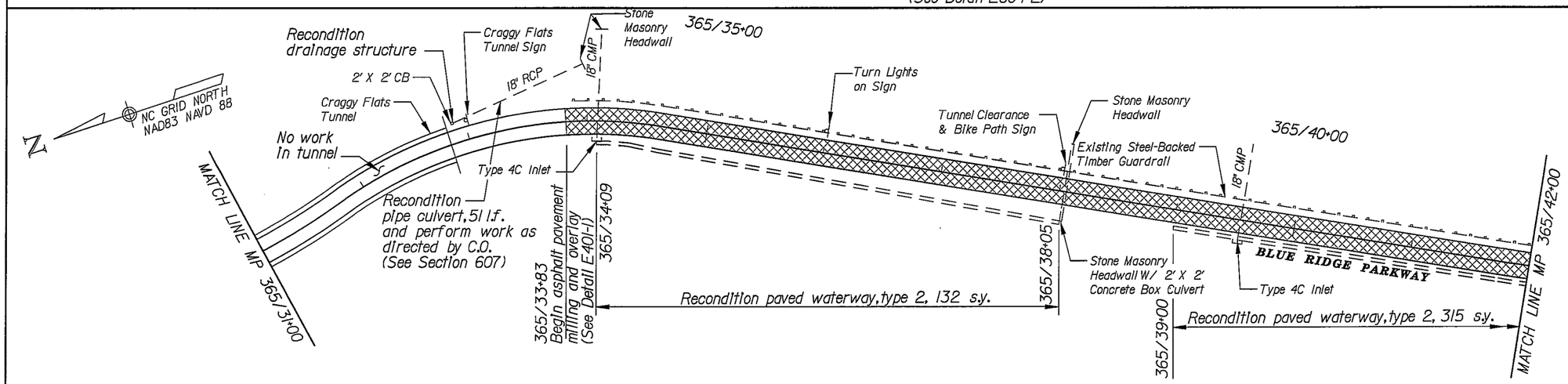

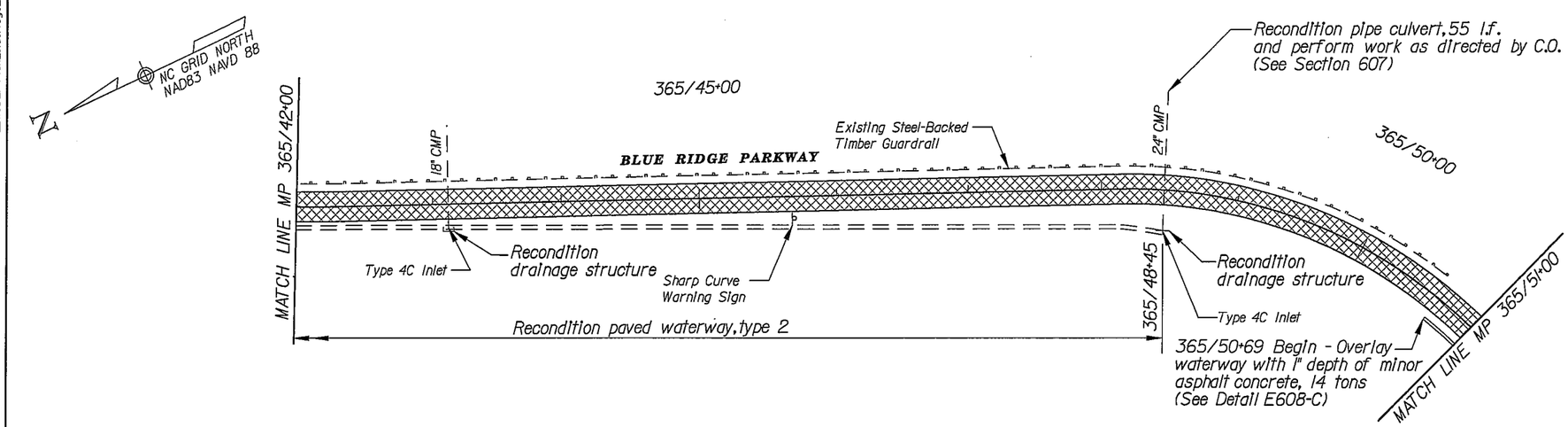

0 50 100
SCALE IN FEET

U.S. DEPARTMENT OF TRANSPORTATION
FEDERAL HIGHWAY ADMINISTRATION
EASTERN FEDERAL LANDS HIGHWAY DIVISION
STERLING, VIRGINIA

BLUE RIDGE PARKWAY
MP 365.4 TO MP 365.9
PLAN

7/10/2008 11:57:44 AM G:\Proj\CT052885\TRAV\FINAL_MOD_7\Plan_bluerdge_10.dgn

NPS NO.	REG	STATE	PROJECT	SHEET NO.	TOTAL SHEETS
601 43918	SE	NC	PRA-BLRI-2P14	49	166

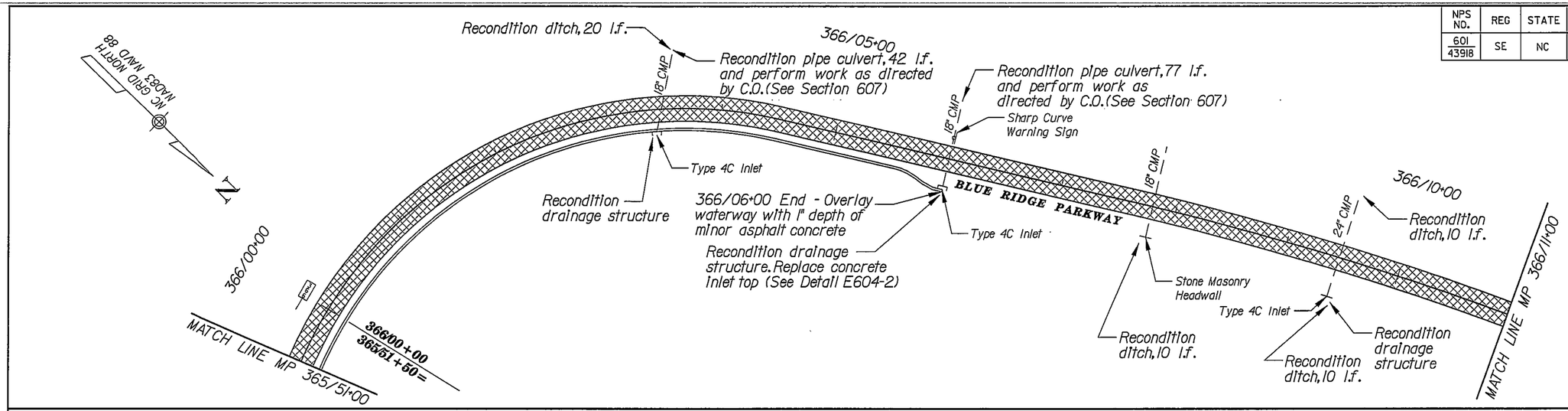

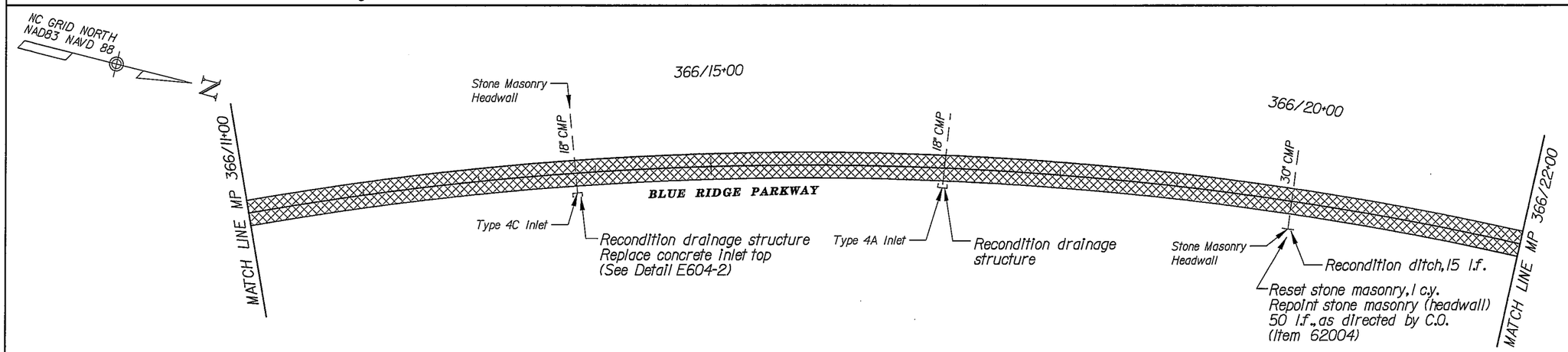

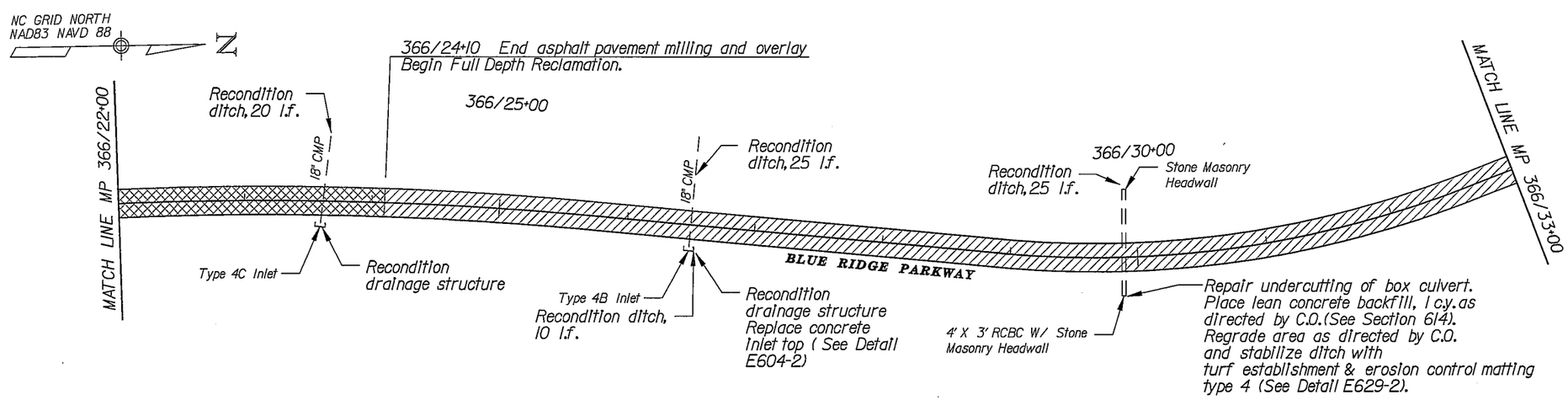

0 50 100
SCALE IN FEET

U.S. DEPARTMENT OF TRANSPORTATION
FEDERAL HIGHWAY ADMINISTRATION
EASTERN FEDERAL LANDS HIGHWAY DIVISION
STERLING, VIRGINIA

BLUE RIDGE PARKWAY
MP 365.9 TO MP 366.6
PLAN

7/10/2008 11:57:55 AM G:\Tra\CT052885\TRAFINAL_MOD_7\Plan_blueridge_11.dgn

NPS NO.	REG	STATE	PROJECT	SHEET NO.	TOTAL SHEETS
601 / 43918	SE	NC	PRA-BLRI-2P14	50	166

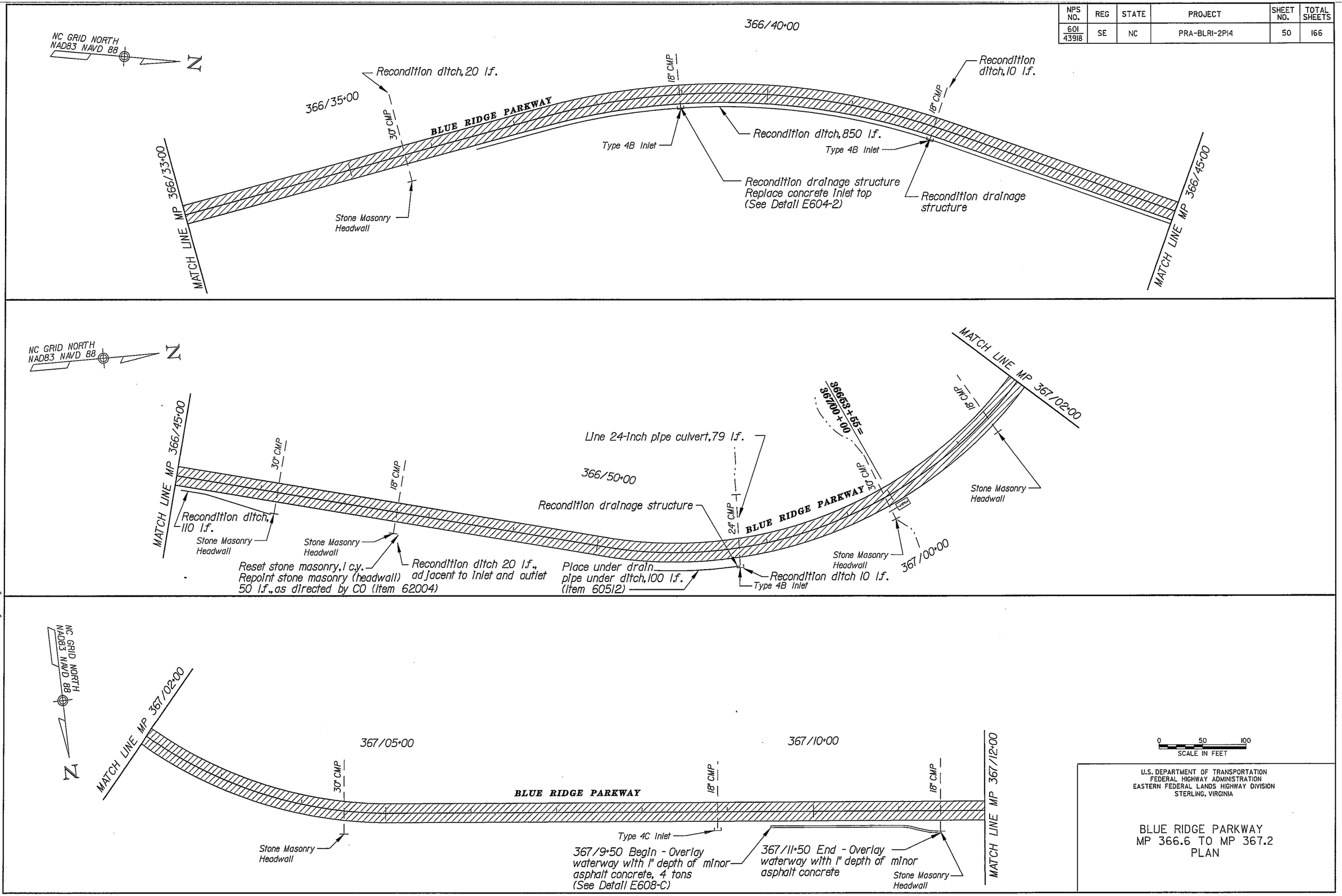

U.S. DEPARTMENT OF TRANSPORTATION
FEDERAL HIGHWAY ADMINISTRATION
EASTERN FEDERAL LANDS HIGHWAY DIVISION
STERLING, VIRGINIA

BLUE RIDGE PARKWAY
MP 366.6 TO MP 367.2
PLAN

7/10/2008 11:58:04 AM G:\Tra\CT052885\TRAVFINAL_MOD_7\Plan_blueridge_12.dgn

NPS NO.	REG	STATE	PROJECT	SHEET NO.	TOTAL SHEETS
601 / 43918	SE	NC	PRA-BLRI-2P14	51	166

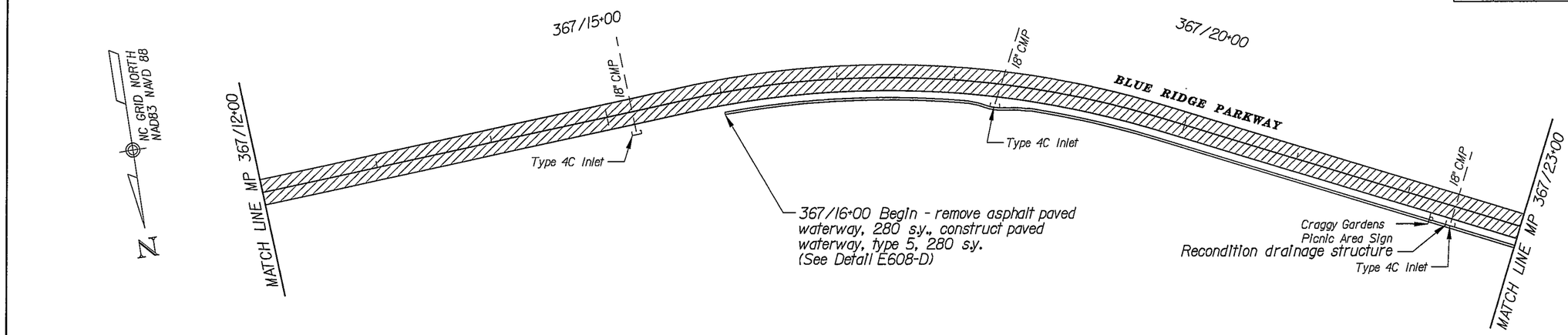

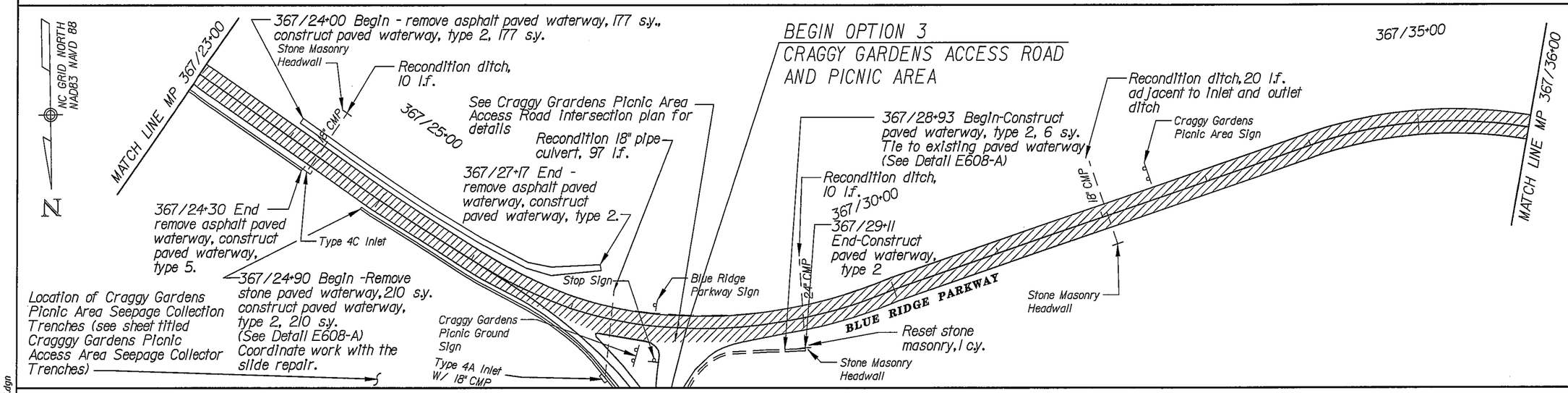

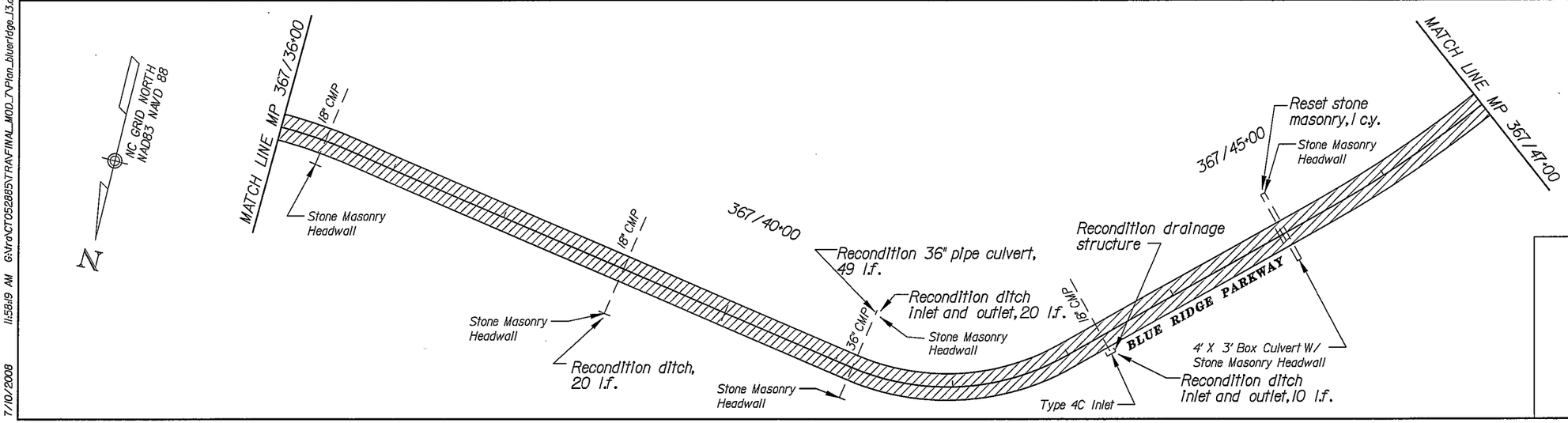

0 50 100
SCALE IN FEET

U.S. DEPARTMENT OF TRANSPORTATION
FEDERAL HIGHWAY ADMINISTRATION
EASTERN FEDERAL LANDS HIGHWAY DIVISION
STERLING, VIRGINIA

BLUE RIDGE PARKWAY
MP 367.2 TO MP 367.9
PLAN

7/10/2008 11:58:19 AM G:\fra\CT05288\TRA\FINAL_MOD_7\Plan_blueridge_13.dgn

NPS NO.	REG	STATE	PROJECT	SHEET NO.	TOTAL SHEETS
601 / 43918	SE	NC	PRA-BLRI-2P14	52	166

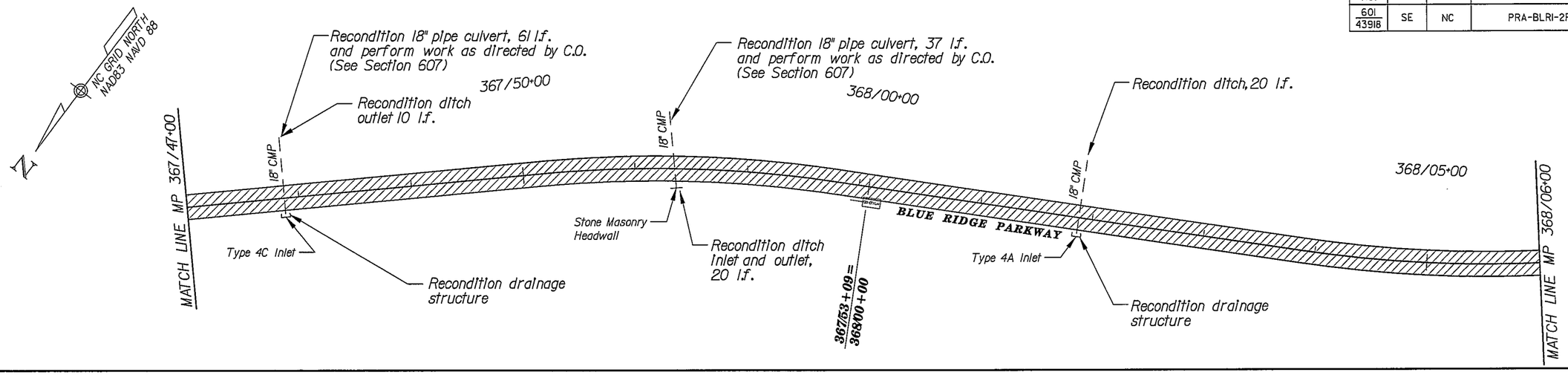

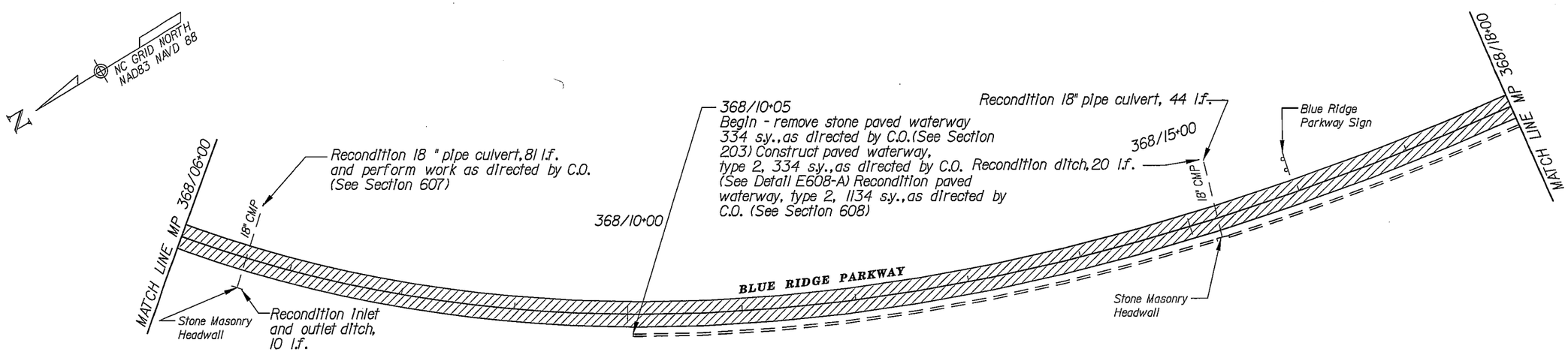

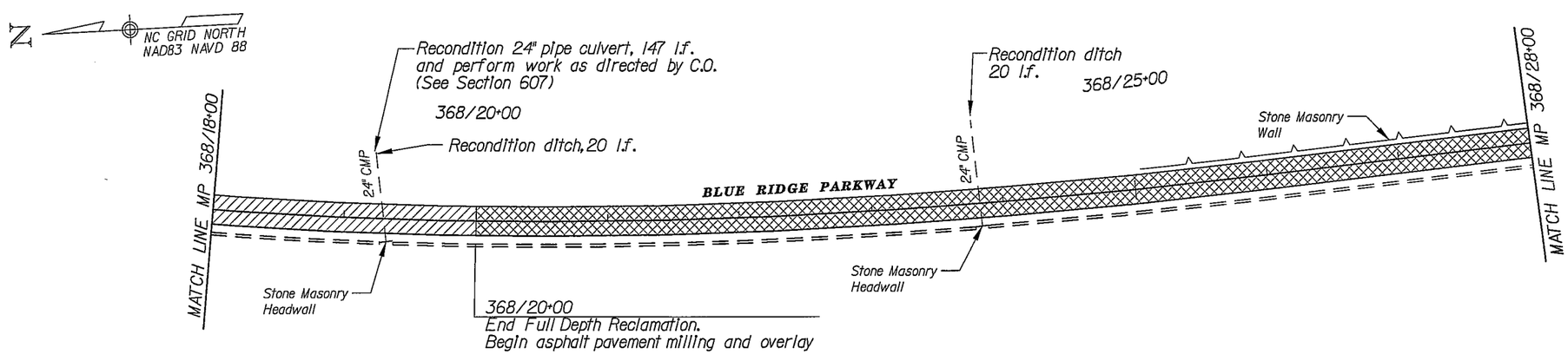

0 50 100
SCALE IN FEET

U.S. DEPARTMENT OF TRANSPORTATION
FEDERAL HIGHWAY ADMINISTRATION
EASTERN FEDERAL LANDS HIGHWAY DIVISION
STERLING, VIRGINIA

BLUE RIDGE PARKWAY
MP 367.9 TO MP 368.5
PLAN

7/10/2008 11:58:29 AM G:\tra\CT052885\TRA\FINAL_MOD_T\Plan_blueridge_J4.dgn

NPS NO.	REG	STATE	PROJECT	SHEET NO.	TOTAL SHEETS
601 / 43918	SE	NC	PRA-BLRI-2P14	53	166

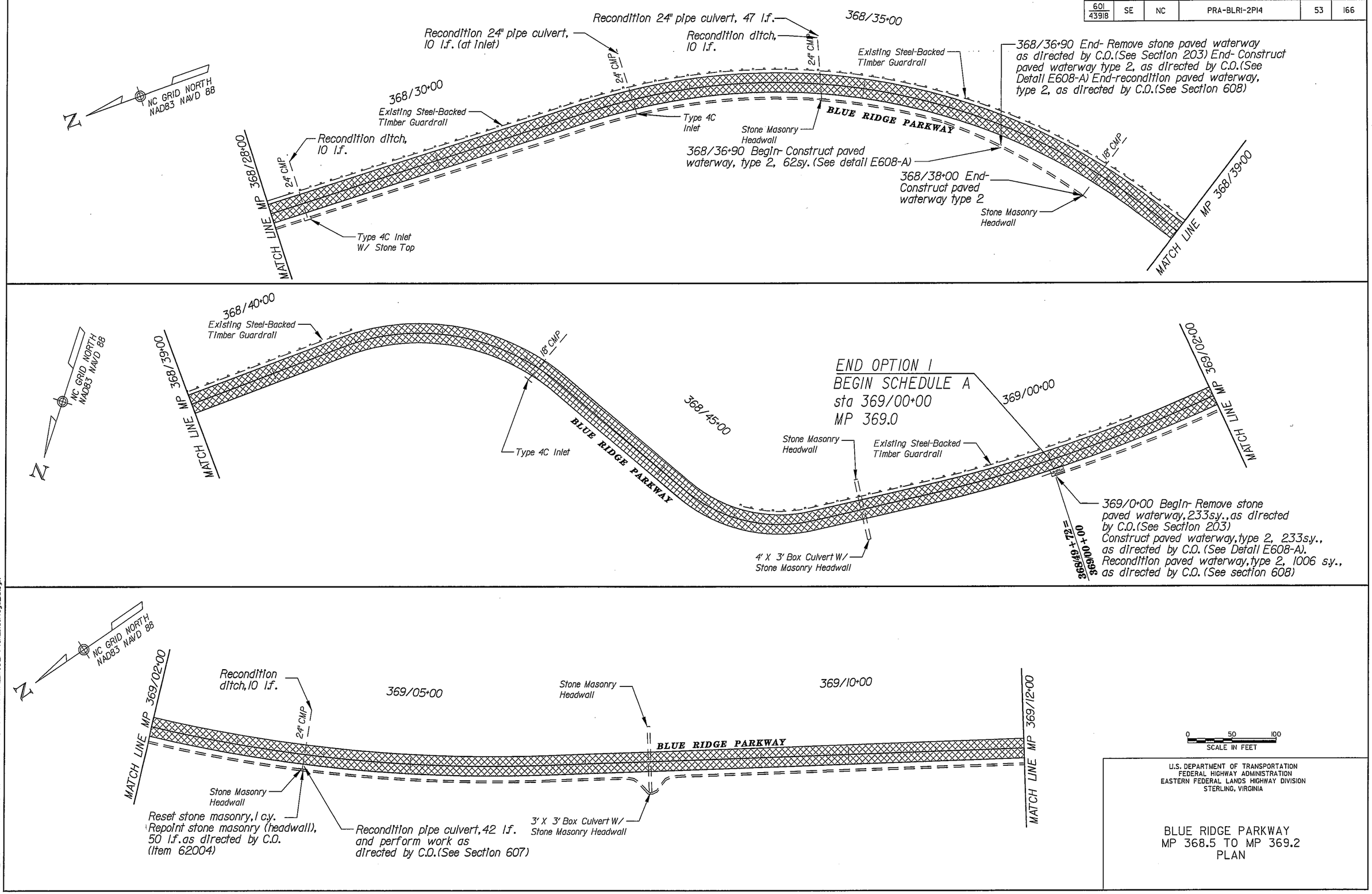

U.S. DEPARTMENT OF TRANSPORTATION
FEDERAL HIGHWAY ADMINISTRATION
EASTERN FEDERAL LANDS HIGHWAY DIVISION
STERLING, VIRGINIA

BLUE RIDGE PARKWAY
MP 368.5 TO MP 369.2
PLAN

7/10/2008 11:58:39 AM G:\traCT05288S\TRAFINAL_MOD_7\Plan_blueridge_I5.dgn

NPS NO.	REG	STATE	PROJECT	SHEET NO.	TOTAL SHEETS
601 / 43918	SE	NC	PRA-BLRI-2P14	54	166

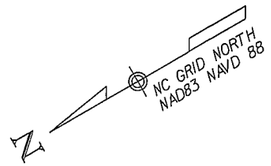

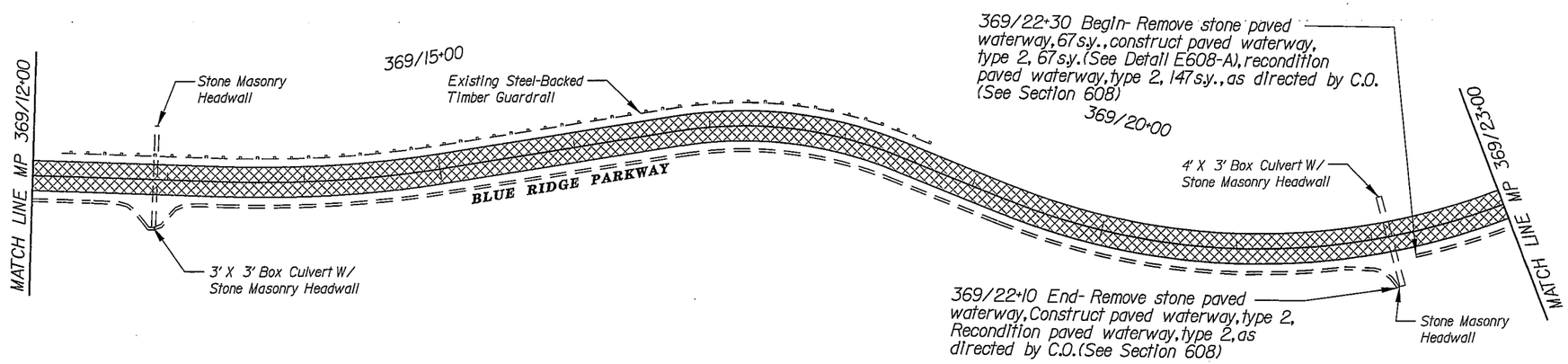

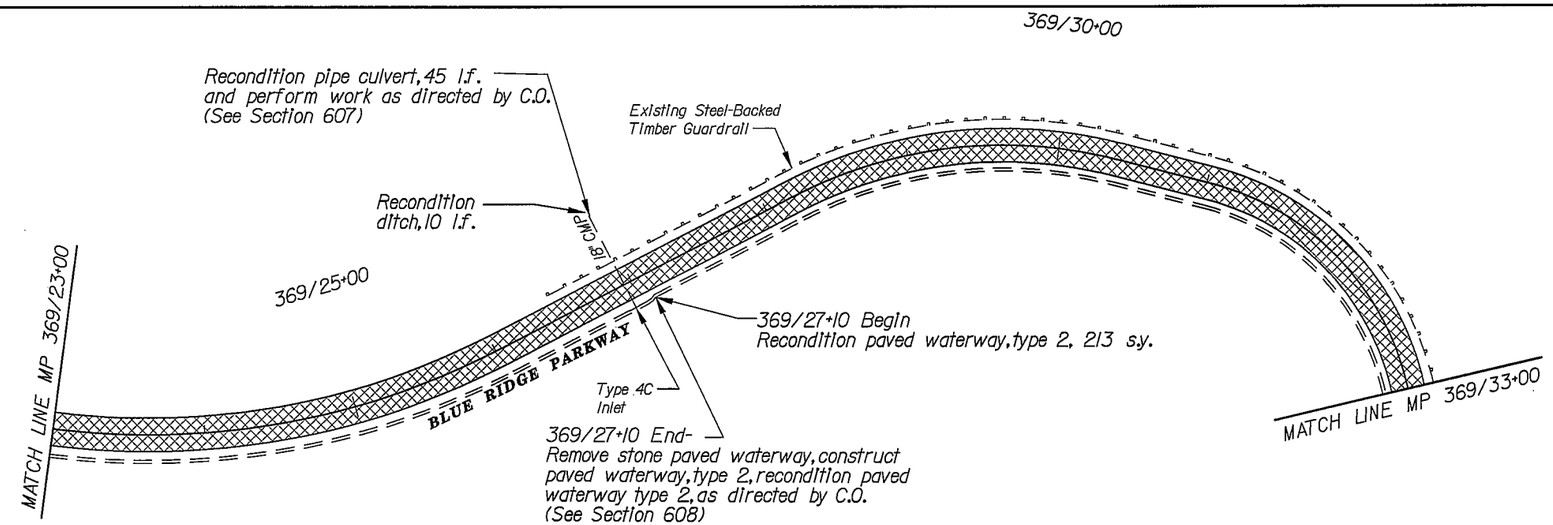

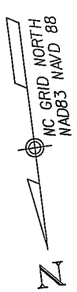

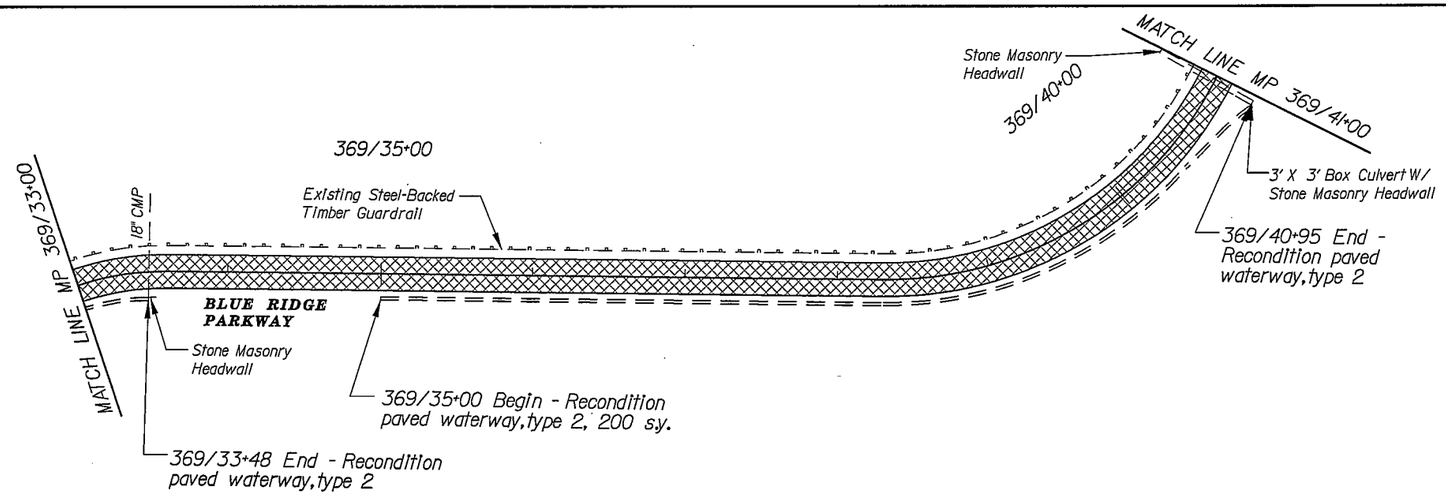

0 50 100
SCALE IN FEET

U.S. DEPARTMENT OF TRANSPORTATION
FEDERAL HIGHWAY ADMINISTRATION
EASTERN FEDERAL LANDS HIGHWAY DIVISION
STERLING, VIRGINIA

BLUE RIDGE PARKWAY
MP 369.2 TO MP 369.8
PLAN

7/10/2008 11:58:48 AM G:\ro\CT052885\TRAV\FINAL_MOD_7\Plan_blueridge_16.dgn

NPS NO.	REG	STATE	PROJECT	SHEET NO.	TOTAL SHEETS
601 43918	SE	NC	PRA-BLRI-2P14	55	166

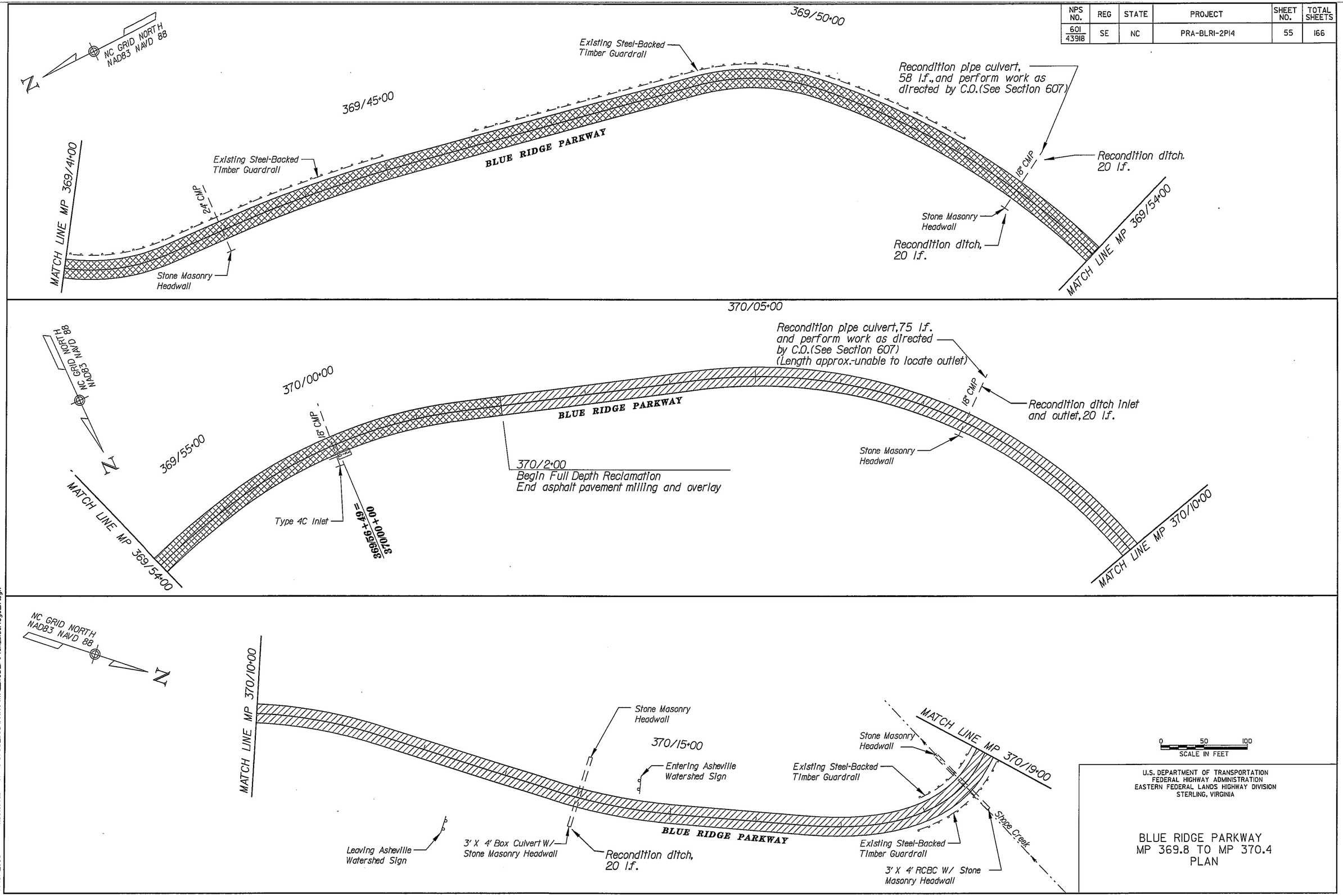

U.S. DEPARTMENT OF TRANSPORTATION
FEDERAL HIGHWAY ADMINISTRATION
EASTERN FEDERAL LANDS HIGHWAY DIVISION
STERLING, VIRGINIA

BLUE RIDGE PARKWAY
MP 369.8 TO MP 370.4
PLAN

7/10/2008 11:59:01 AM G:\tra\CT052885\TRA\FINAL_MOD_7\Plan_blueridge_JT.dgn

NPS NO.	REG	STATE	PROJECT	SHEET NO.	TOTAL SHEETS
601 / 43918	SE	NC	PRA-BLRI-2P14	56	166

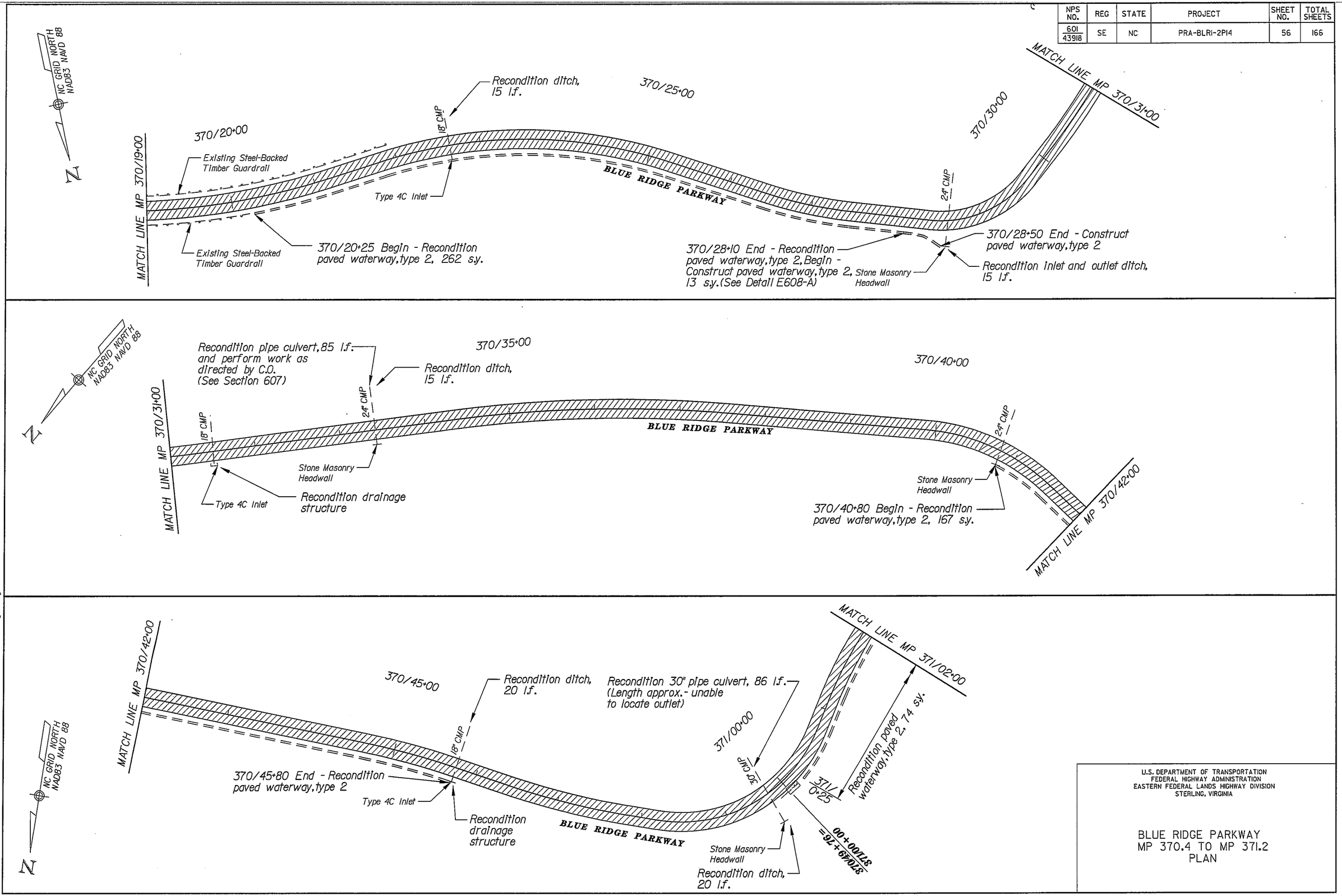

U.S. DEPARTMENT OF TRANSPORTATION
FEDERAL HIGHWAY ADMINISTRATION
EASTERN FEDERAL LANDS HIGHWAY DIVISION
STERLING, VIRGINIA

BLUE RIDGE PARKWAY
MP 370.4 TO MP 371.2
PLAN

7/10/2008 11:59:13 AM G:\tra\CT05288S\TRA\FINAL_MOD_7\Plan_blueridge_J8.dgn

NPS NO.	REG	STATE	PROJECT	SHEET NO.	TOTAL SHEETS
601 / 43918	SE	NC	PRA-BLRI-2P14	57	166

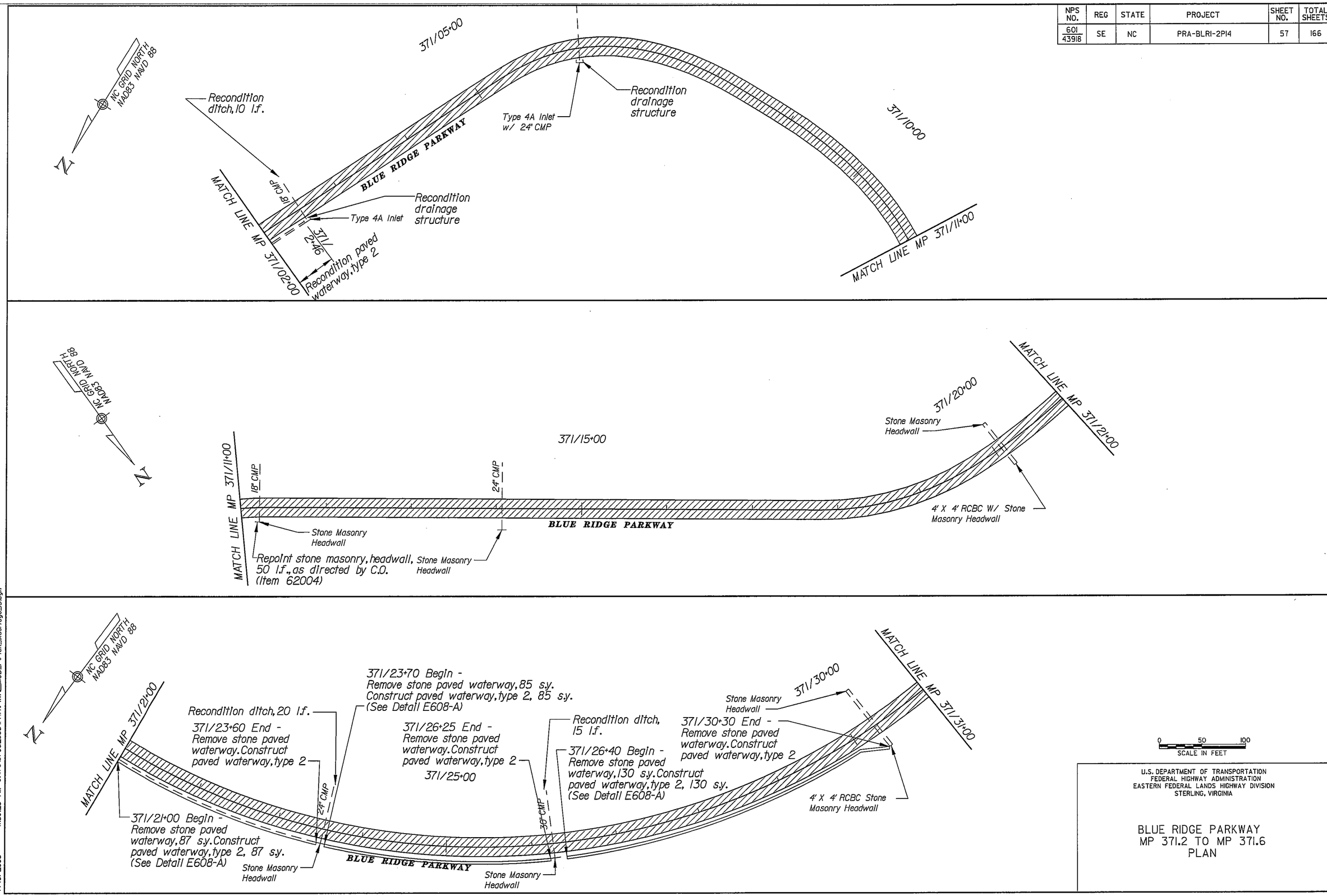

U.S. DEPARTMENT OF TRANSPORTATION
FEDERAL HIGHWAY ADMINISTRATION
EASTERN FEDERAL LANDS HIGHWAY DIVISION
STERLING, VIRGINIA

BLUE RIDGE PARKWAY
MP 371.2 TO MP 371.6
PLAN

7/10/2008 11:59:23 AM G:\tra\CT052865\TRAFINAL_MOD_7\Plan_blueridge_19.dgn

NPS NO.	REG	STATE	PROJECT	SHEET NO.	TOTAL SHEETS
601 / 43918	SE	NC	PRA-BLRI-2P14	58	166

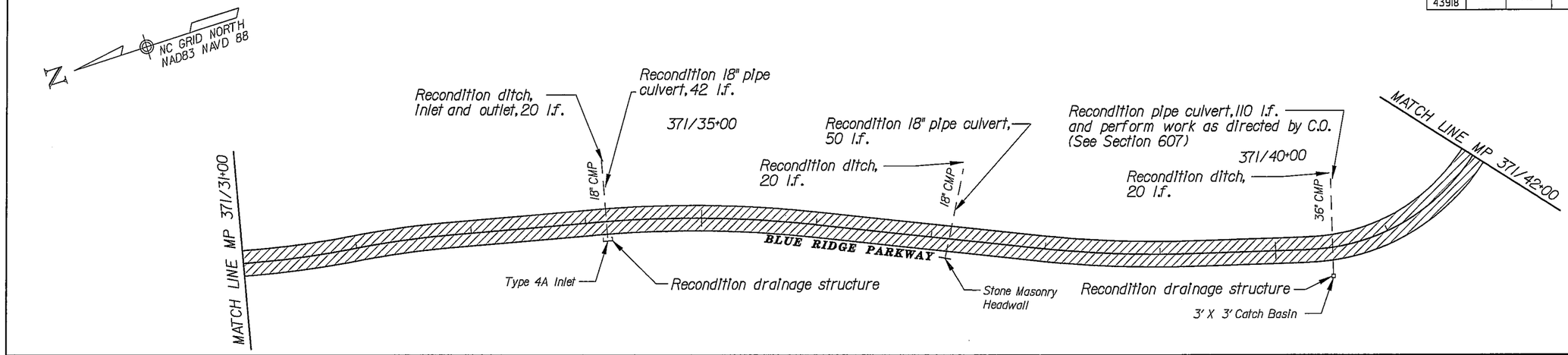

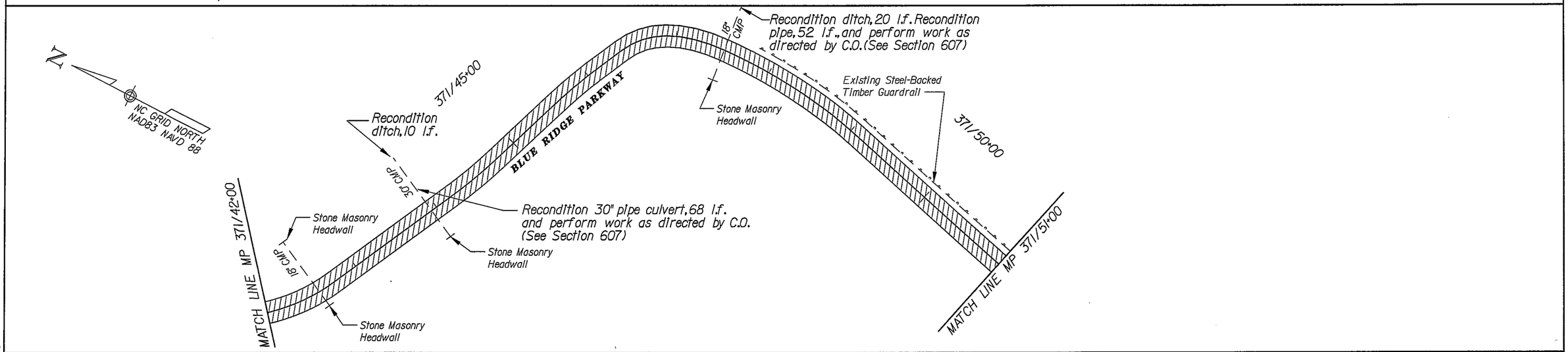

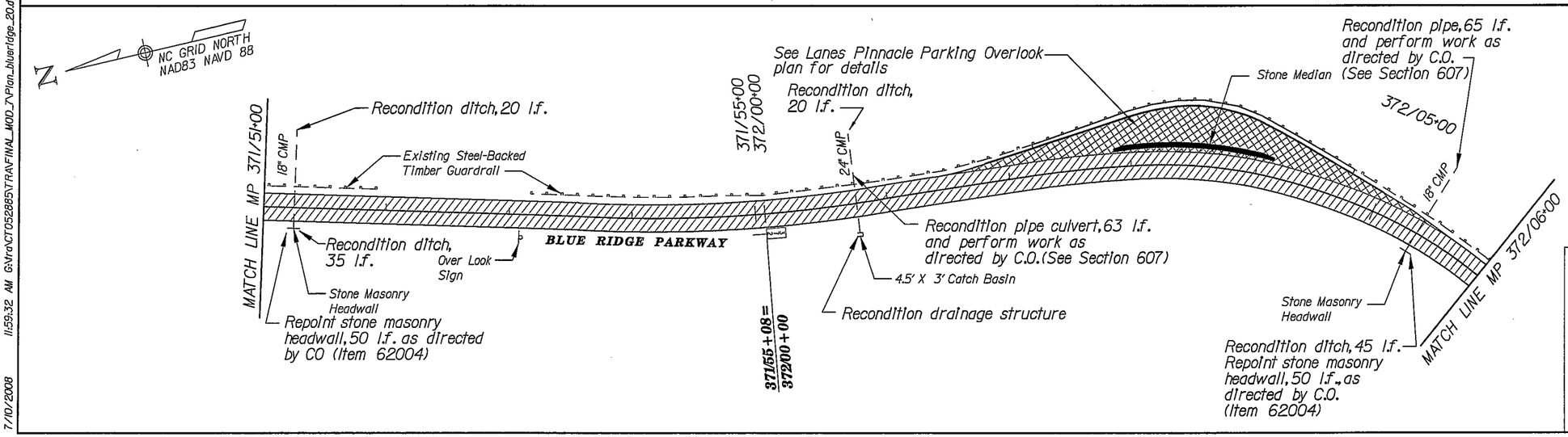

0 50 100
SCALE IN FEET

U.S. DEPARTMENT OF TRANSPORTATION
FEDERAL HIGHWAY ADMINISTRATION
EASTERN FEDERAL LANDS HIGHWAY DIVISION
STERLING, VIRGINIA

BLUE RIDGE PARKWAY
MP 371.6 TO MP 372.1
PLAN

7/10/2008 11:59:32 AM G:\tra\CT052885\TRAFINAL_MOD_7\Plan_blueridge_20.dgn

NPS NO.	REG	STATE	PROJECT	SHEET NO.	TOTAL SHEETS
601 / 43918	SE	NC	PRA-BLRI-2P14	59	166

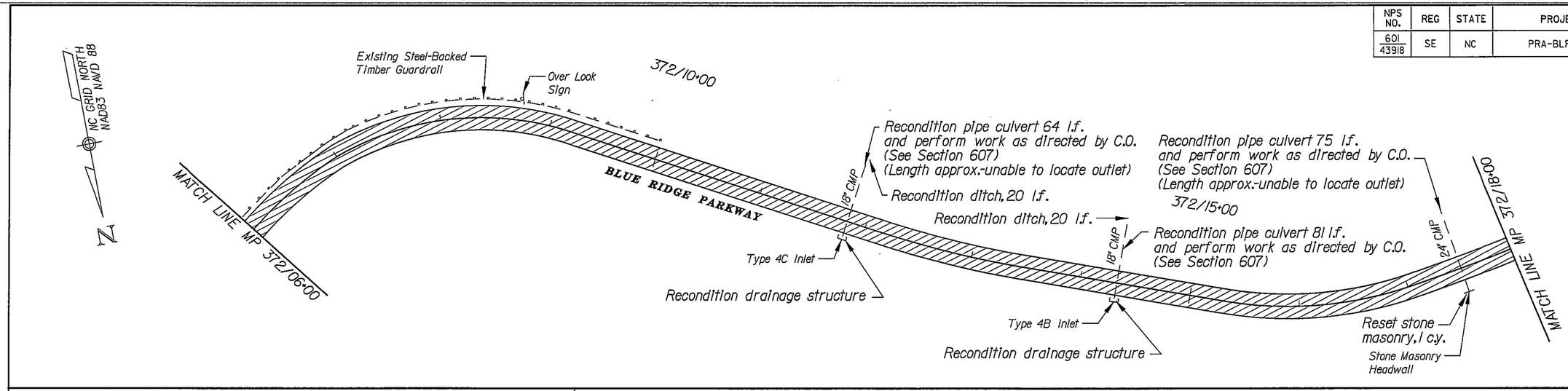

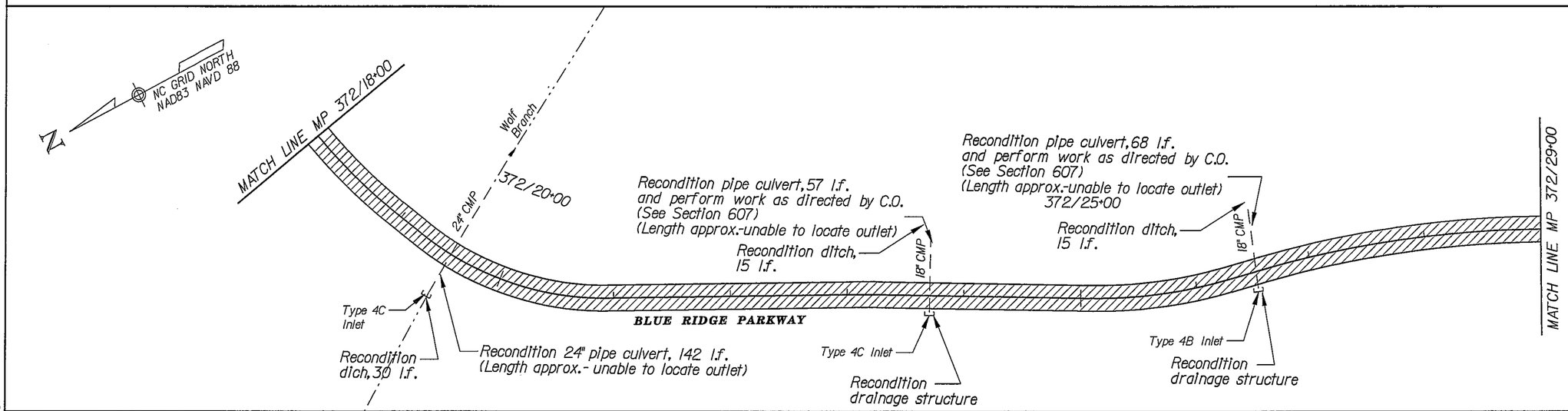

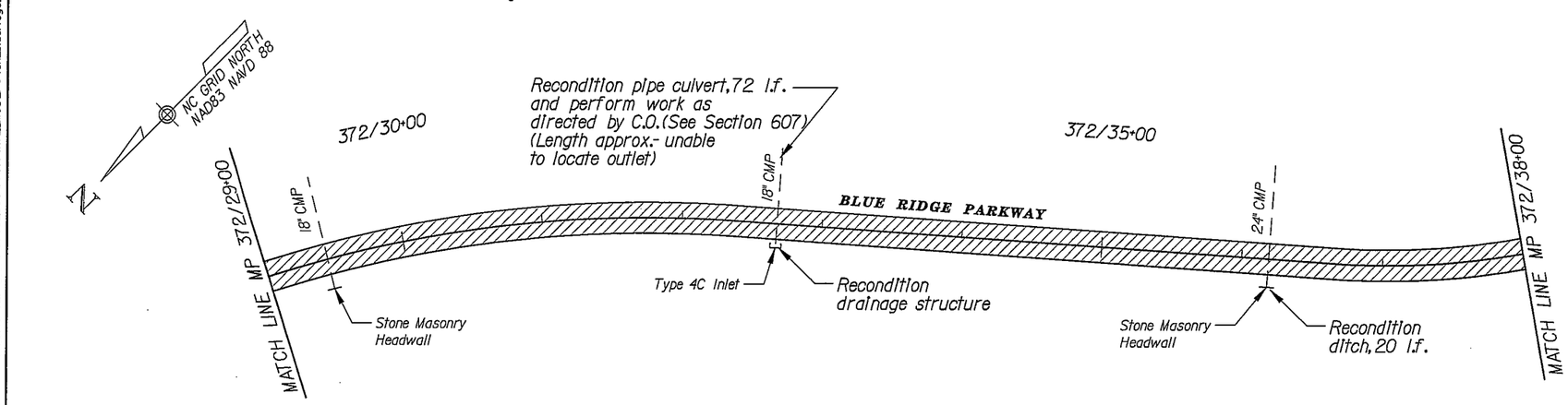

0 50 100
SCALE IN FEET

U.S. DEPARTMENT OF TRANSPORTATION
FEDERAL HIGHWAY ADMINISTRATION
EASTERN FEDERAL LANDS HIGHWAY DIVISION
STERLING, VIRGINIA

BLUE RIDGE PARKWAY
MP 372.1 TO MP 372.8
PLAN

7/10/2008 11:59:43 AM G:\tro\CT052885\TRAFINAL_MOD_7\Plan_blueridge_21.dgn

NPS NO.	REG	STATE	PROJECT	SHEET NO.	TOTAL SHEETS
601 / 43918	SE	NC	PRA-BLRI-2P14	60	166

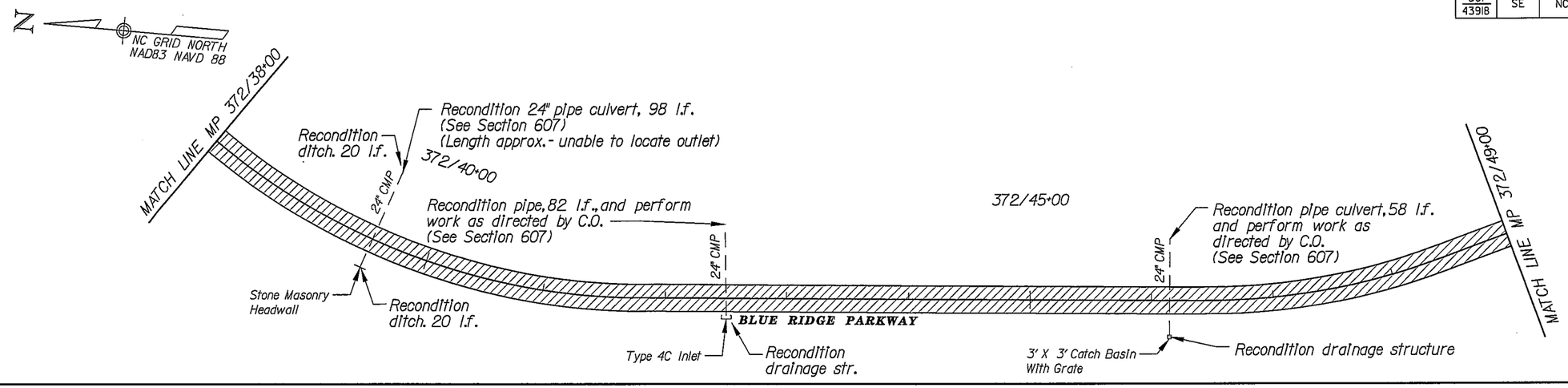

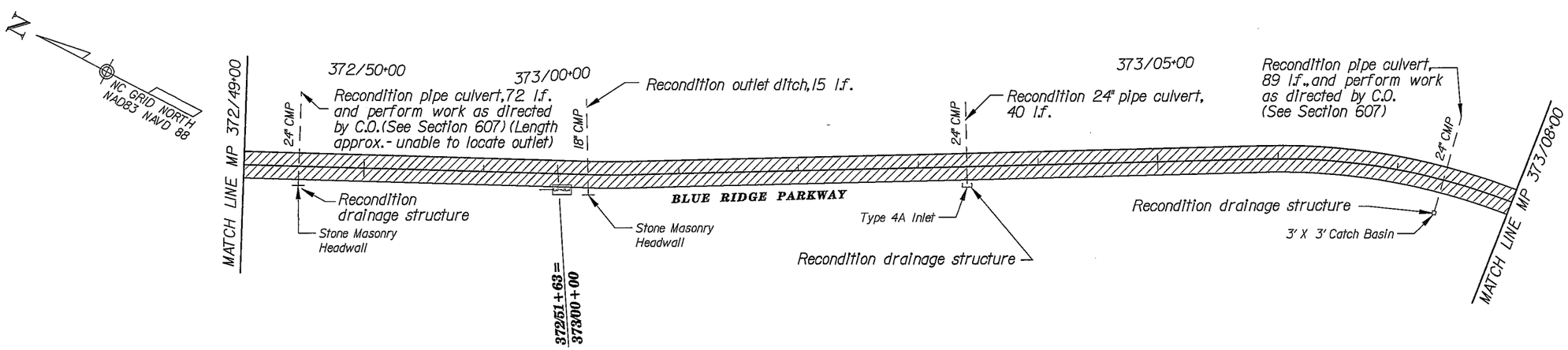

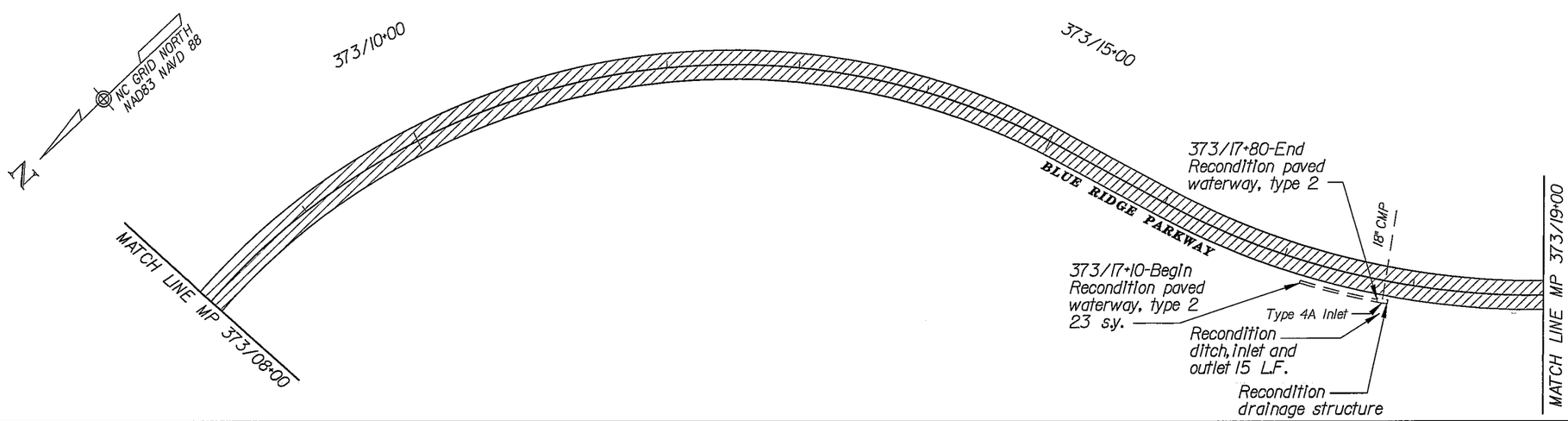

0 50 100
SCALE IN FEET

U.S. DEPARTMENT OF TRANSPORTATION
FEDERAL HIGHWAY ADMINISTRATION
EASTERN FEDERAL LANDS HIGHWAY DIVISION
STERLING, VIRGINIA

BLUE RIDGE PARKWAY
MP 372.8 TO MP 373.4
PLAN

7/10/2008 11:59:52 AM G:\tra\CT052885\TRAFINAL_MOD_7\Plan_blueridge_22.dgn

NPS NO.	REG	STATE	PROJECT	SHEET NO.	TOTAL SHEETS
601 / 43918	SE	NC	PRA-BLRI-2P14	61	166

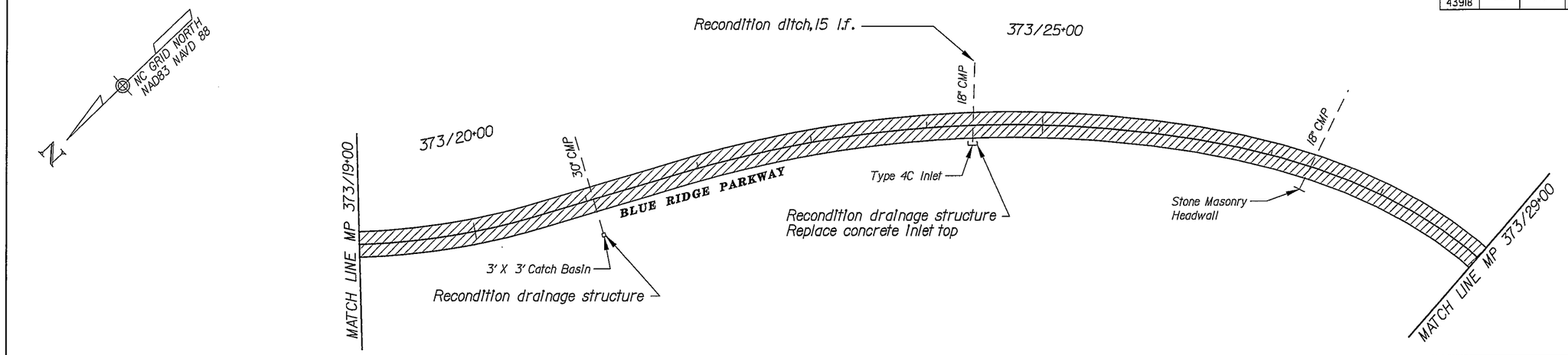

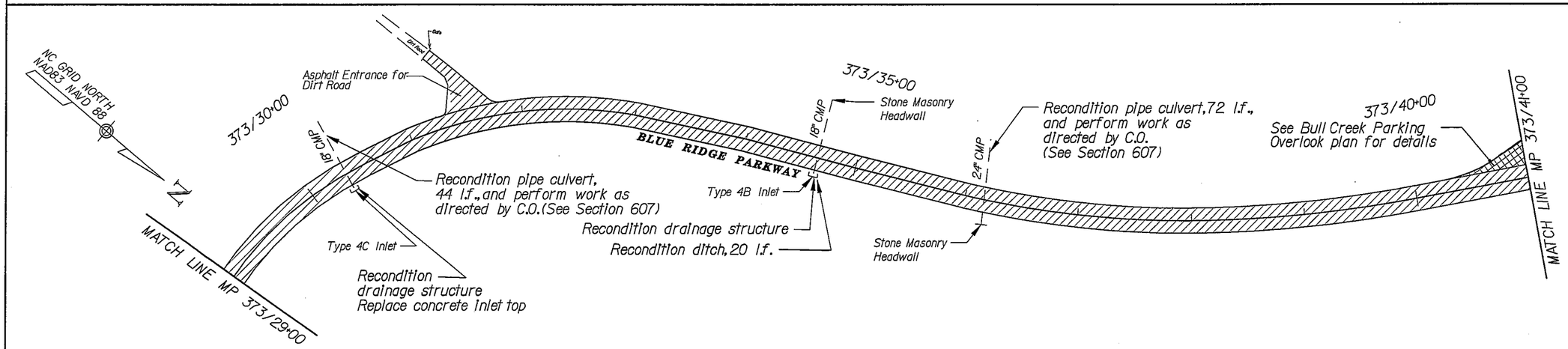

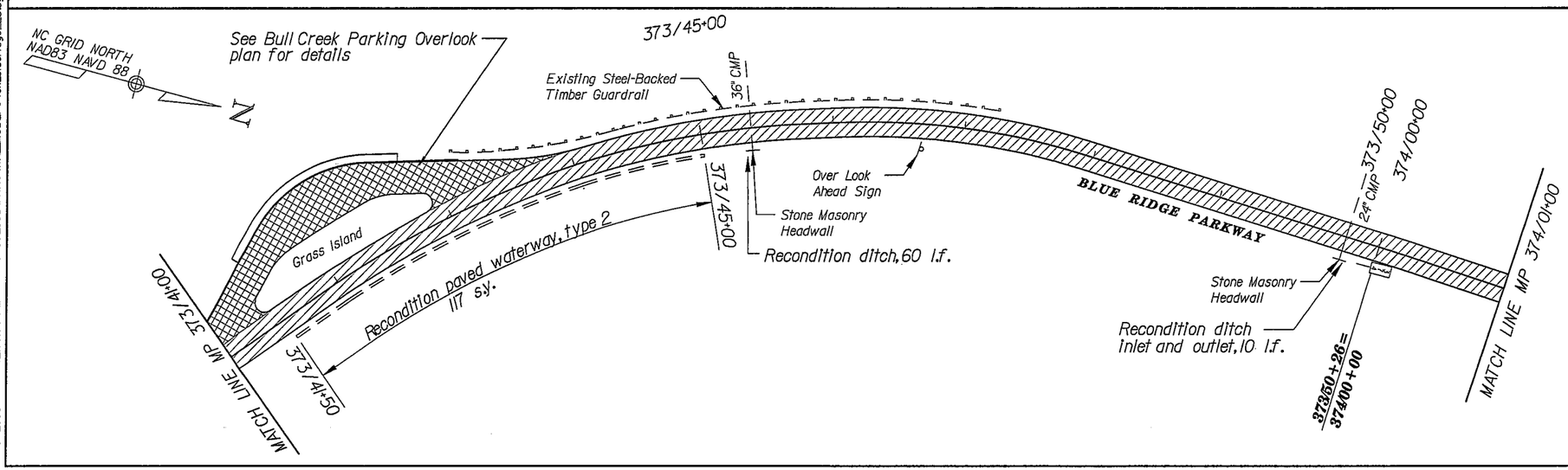

0 50 100
SCALE IN FEET

U.S. DEPARTMENT OF TRANSPORTATION
FEDERAL HIGHWAY ADMINISTRATION
EASTERN FEDERAL LANDS HIGHWAY DIVISION
STERLING, VIRGINIA

BLUE RIDGE PARKWAY
MP 373.4 TO MP 374.0
PLAN

7/10/2008 12:00:04 PM G:\tra\CT052885\TRAFINAL_MOD_7\Plan_blueridge_23.dgn

NPS NO.	REG	STATE	PROJECT	SHEET NO.	TOTAL SHEETS
601 / 43918	SE	NC	PRA-BLRI-2P14	62	166

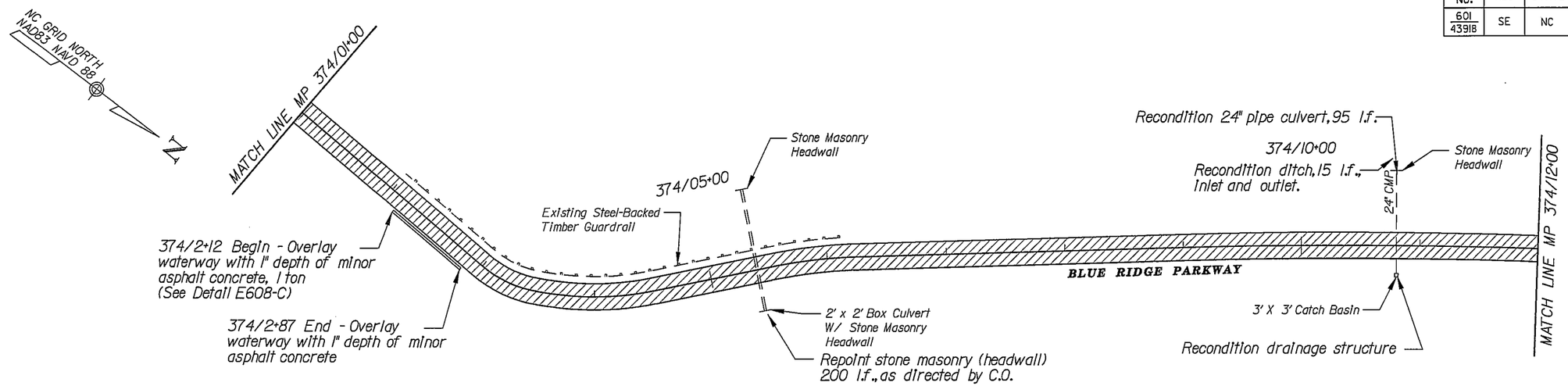

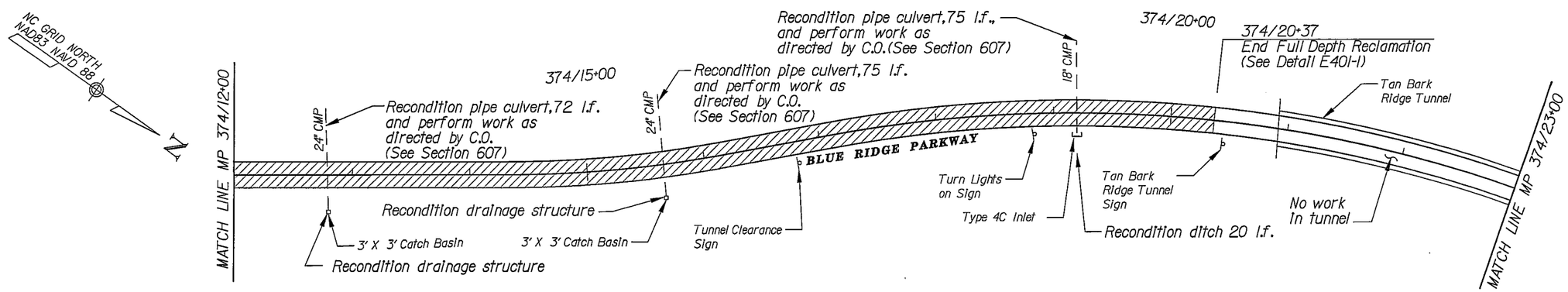

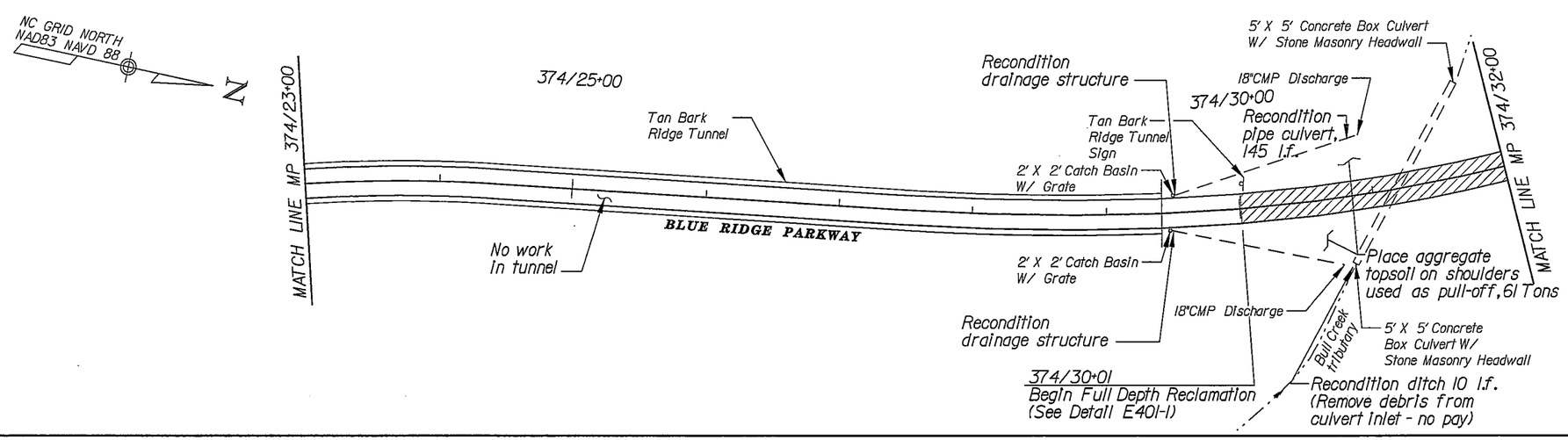

0 50 100
SCALE IN FEET

U.S. DEPARTMENT OF TRANSPORTATION
FEDERAL HIGHWAY ADMINISTRATION
EASTERN FEDERAL LANDS HIGHWAY DIVISION
STERLING, VIRGINIA

BLUE RIDGE PARKWAY
MP 374.0 TO MP 374.6
PLAN

7/10/2008 12:00:15 PM G:\tra\CT052885\TRA\FINAL_MOD_7\Plan_blueridge_24.dgn

NPS NO.	REG	STATE	PROJECT	SHEET NO.	TOTAL SHEETS
601 / 43918	SE	NC	PRA-BLRI-2P14	63	166

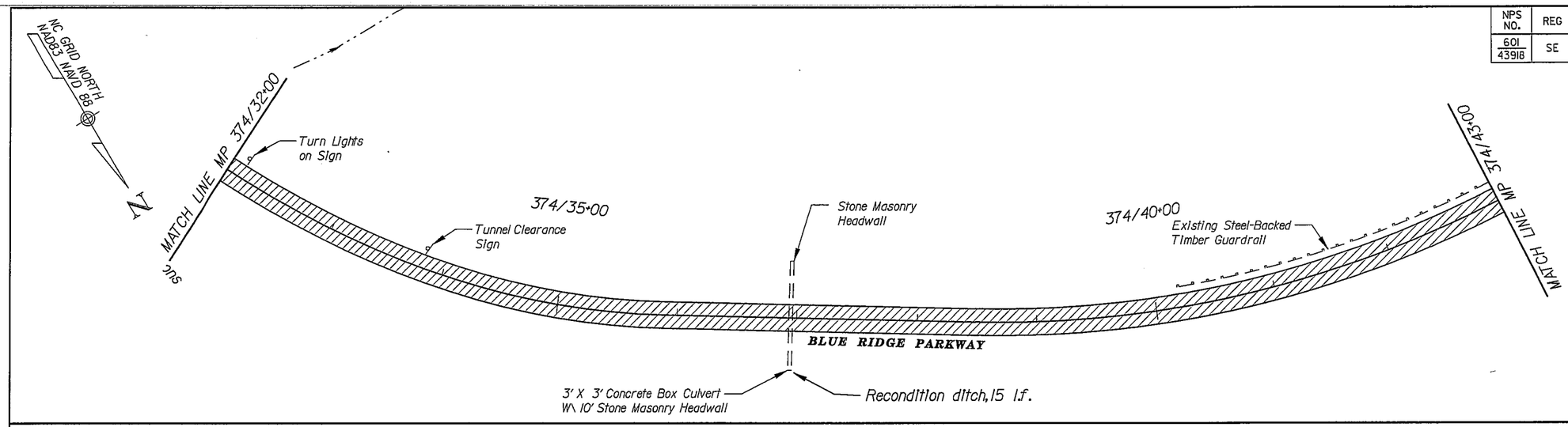

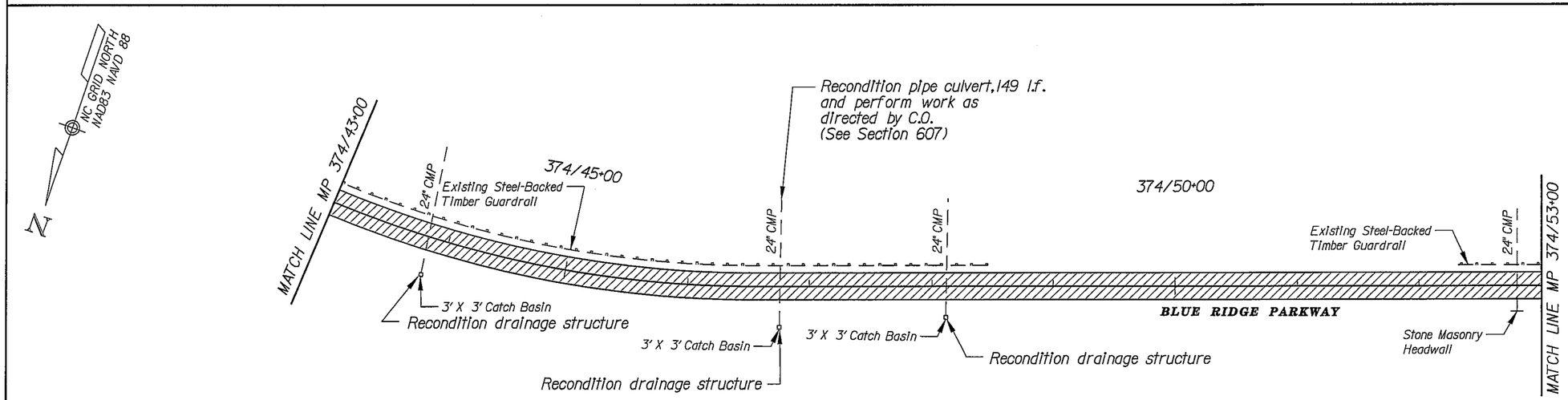

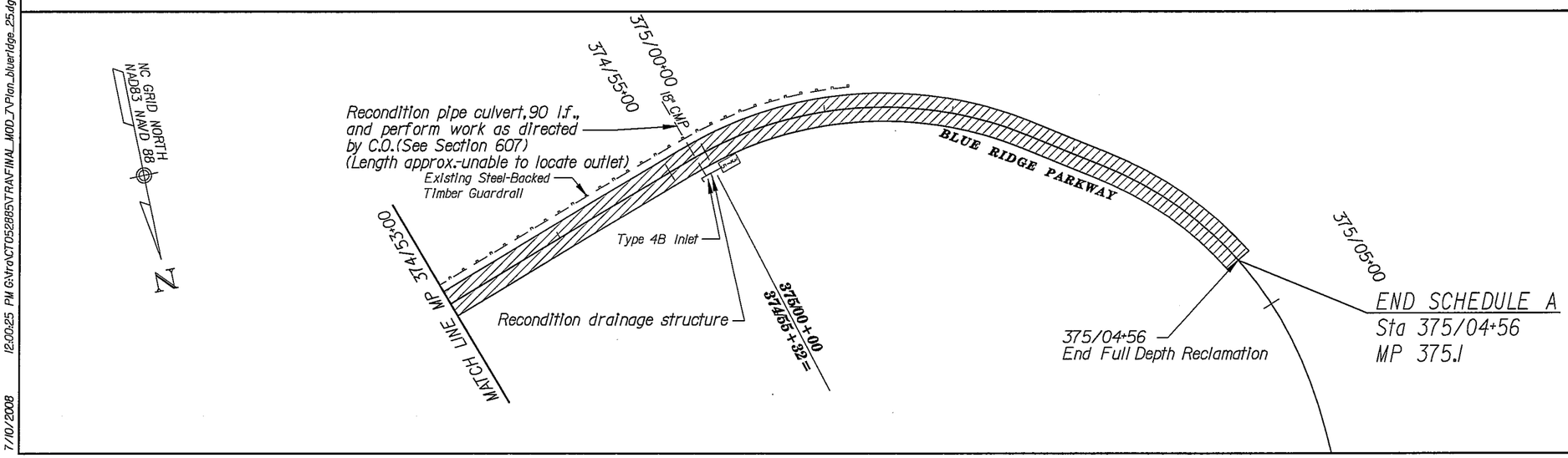

0 50 100
SCALE IN FEET

U.S. DEPARTMENT OF TRANSPORTATION
FEDERAL HIGHWAY ADMINISTRATION
EASTERN FEDERAL LANDS HIGHWAY DIVISION
STERLING, VIRGINIA

BLUE RIDGE PARKWAY
MP 374.6 TO MP 375.1
PLAN

7/10/2008 12:00:25 PM G:\tra\CT052885\TRA\FINAL_MOD_7\Plan_blueridge_25.dgn

NPS NO.	REG	STATE	PROJECT	SHEET NO.	TOTAL SHEETS
601 / 43918	SE	NC	PRA-BLRI-2P14	64	166

Notes:
1. Replace any broken curb with stone curb matching in appearance to existing curb. Existing stone curb is to be reset using base as necessary to obtain a smooth profile along top of curb.

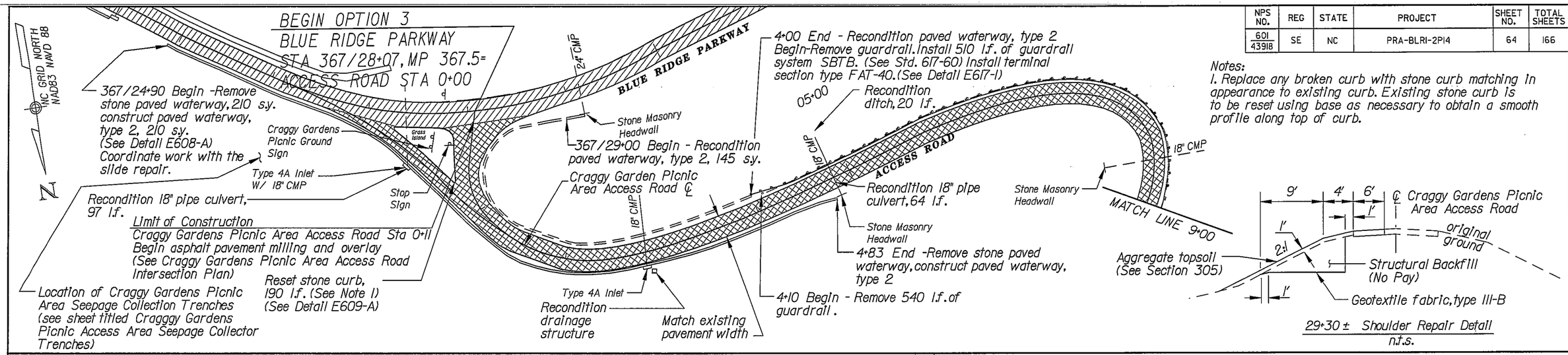

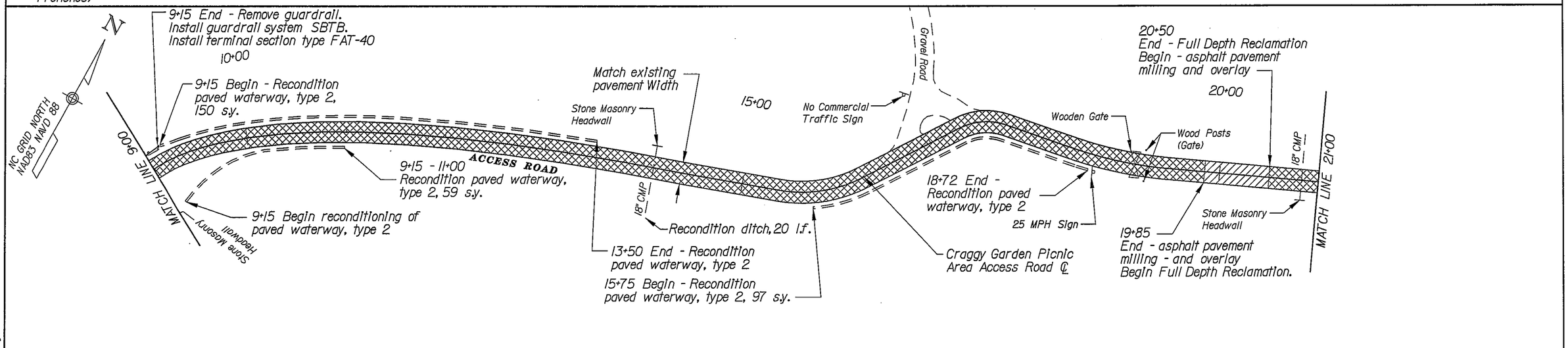

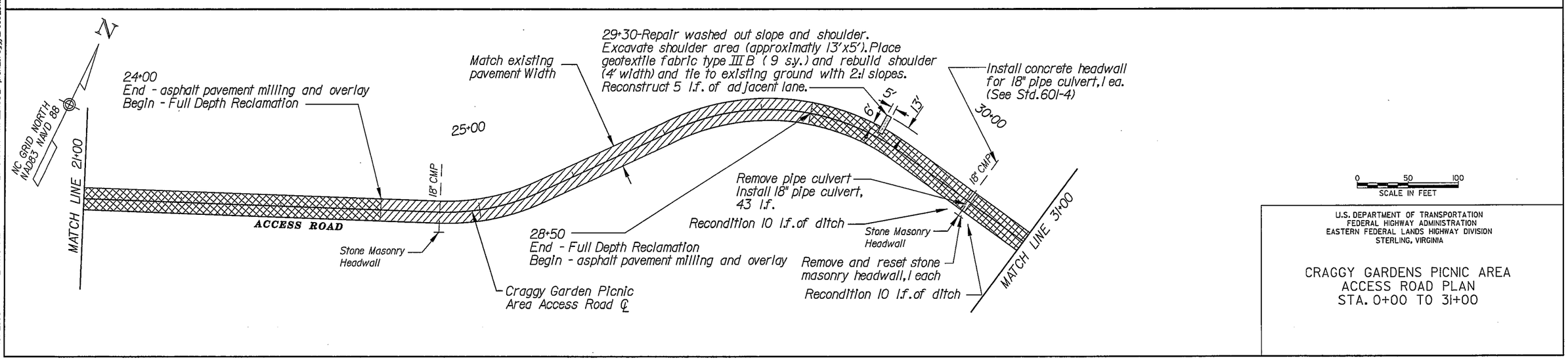

0 50 100
SCALE IN FEET

U.S. DEPARTMENT OF TRANSPORTATION
FEDERAL HIGHWAY ADMINISTRATION
EASTERN FEDERAL LANDS HIGHWAY DIVISION
STERLING, VIRGINIA

CRAGGY GARDENS PICNIC AREA
ACCESS ROAD PLAN
STA. 0+00 TO 31+00

7/10/2008 12:01:39 PM G:\tra\CT052885\TRA\FINAL_MOD_7\plan_craggy_road_01.dgn

NPS NO.	REG	STATE	PROJECT	SHEET NO.	TOTAL SHEETS
601 / 43918	SE	NC	PRA-BLRI-2P14	65	166

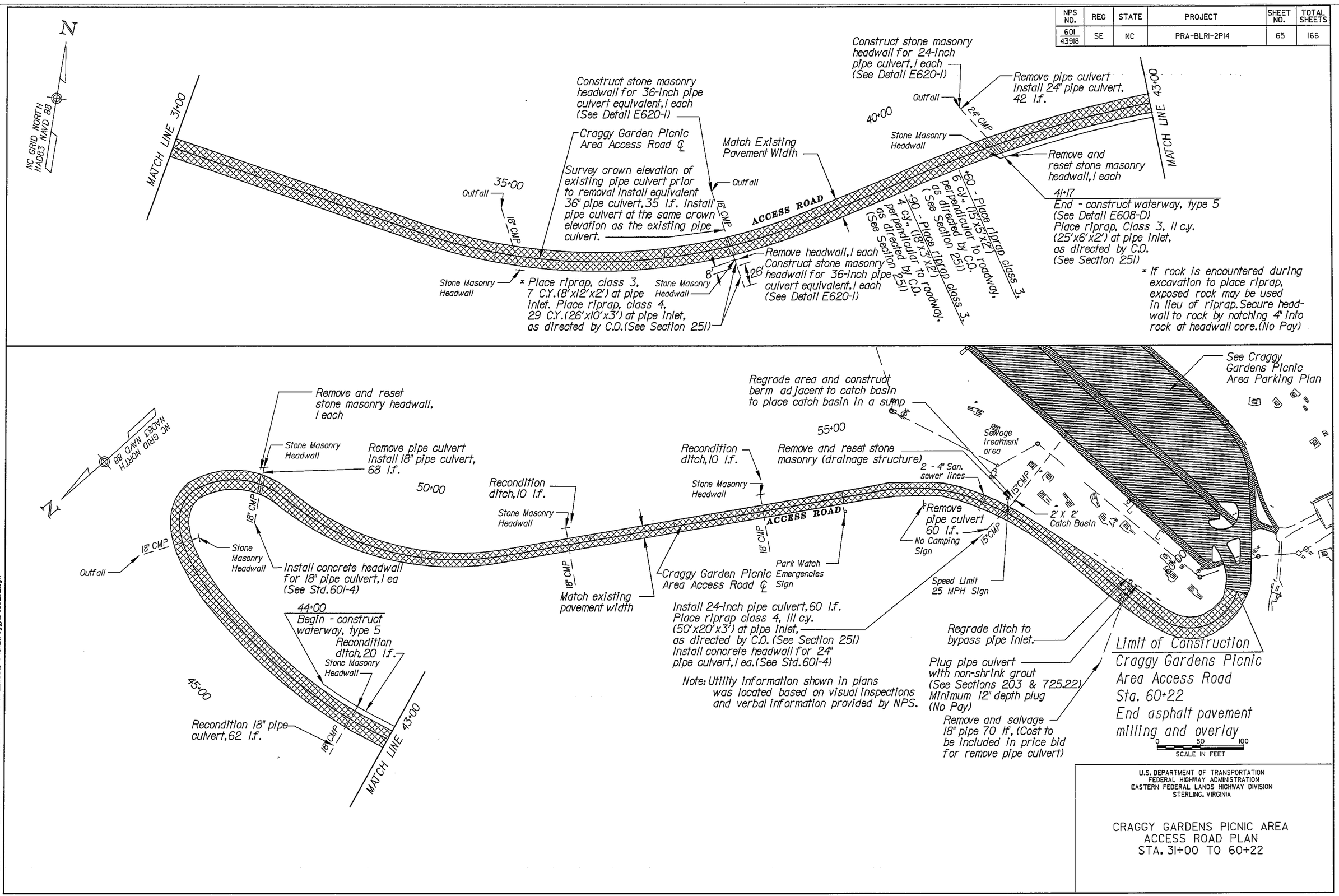

U.S. DEPARTMENT OF TRANSPORTATION
FEDERAL HIGHWAY ADMINISTRATION
EASTERN FEDERAL LANDS HIGHWAY DIVISION
STERLING, VIRGINIA

CRAGGY GARDENS PICNIC AREA
ACCESS ROAD PLAN
STA. 31+00 TO 60+22

7/10/2008 12:01:49 PM G:\tra\CTO52885\TRA\FINAL_MOD_7\Plan_craggy_road_02.dgn

NPS NO.	REG	STATE	PROJECT	SHEET NO.	TOTAL SHEETS
601 / 43918	SE	NC	PRA-BLRI-2P14	66	166

Additional Symbols

- Full Depth Reclamation
- Asphalt Pavement Milling and Overlay
- New Asphalt Concrete Sidewalk
- Road Reconstruction

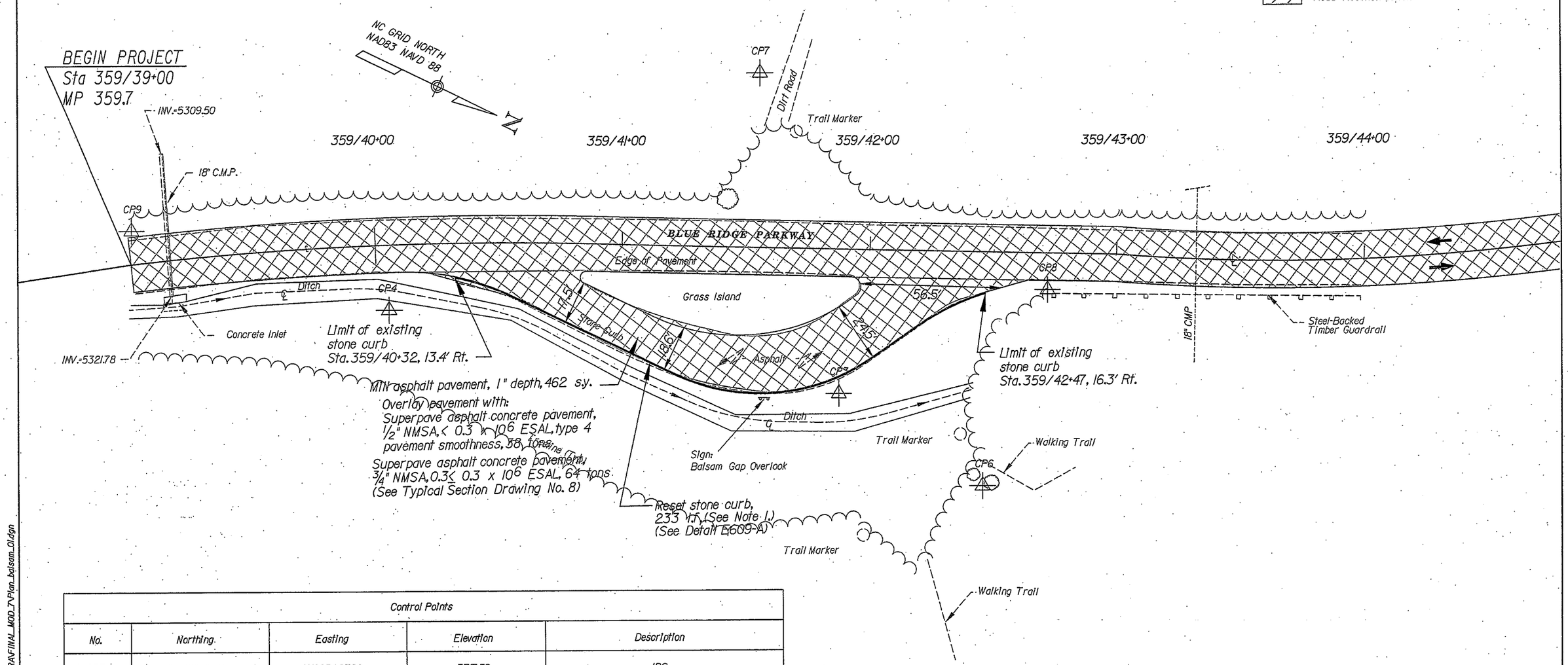

Control Points				
No.	Northing	Easting	Elevation	Description
CP3	743961.3060	1010954.2320	5317.59	IPS
CP4	743783.2440	1011002.5470	5325.49	IPS
CP6	744029.7350	1010962.4250	5312.87	IPS
CP7	743876.9590	1010852.2060	5317.40	IPS
CP8	744019.6320	1010880.1960	5315.76	N/R
CP9	743674.6130	1011019.5680	5326.66	N/R

Notes:
1. Replace any broken curb with stone curb matching in appearance to existing curb. Existing stone curb is to be reset using base as necessary to obtain a smooth profile along top of curb.

0 20 40
SCALE IN FEET

U.S. DEPARTMENT OF TRANSPORTATION
FEDERAL HIGHWAY ADMINISTRATION
EASTERN FEDERAL LANDS HIGHWAY DIVISION
STERLING, VIRGINIA

BALSAM GAP PARKING AREA PLAN

7/10/2008 12:12 PM G:\TraCT052885\TRAFINAL_MOD_7\Plan_balsam_01.dgn

NPS NO.	REG	STATE	PROJECT	SHEET NO.	TOTAL SHEETS
601 / 43918	SE	NC	PRA-BLRI-2P14	67	166

Notes:
1. Replace any broken curb with stone curb matching in appearance to existing curb. Existing stone curb is to be reset using base as necessary to obtain a smooth profile along top of curb.

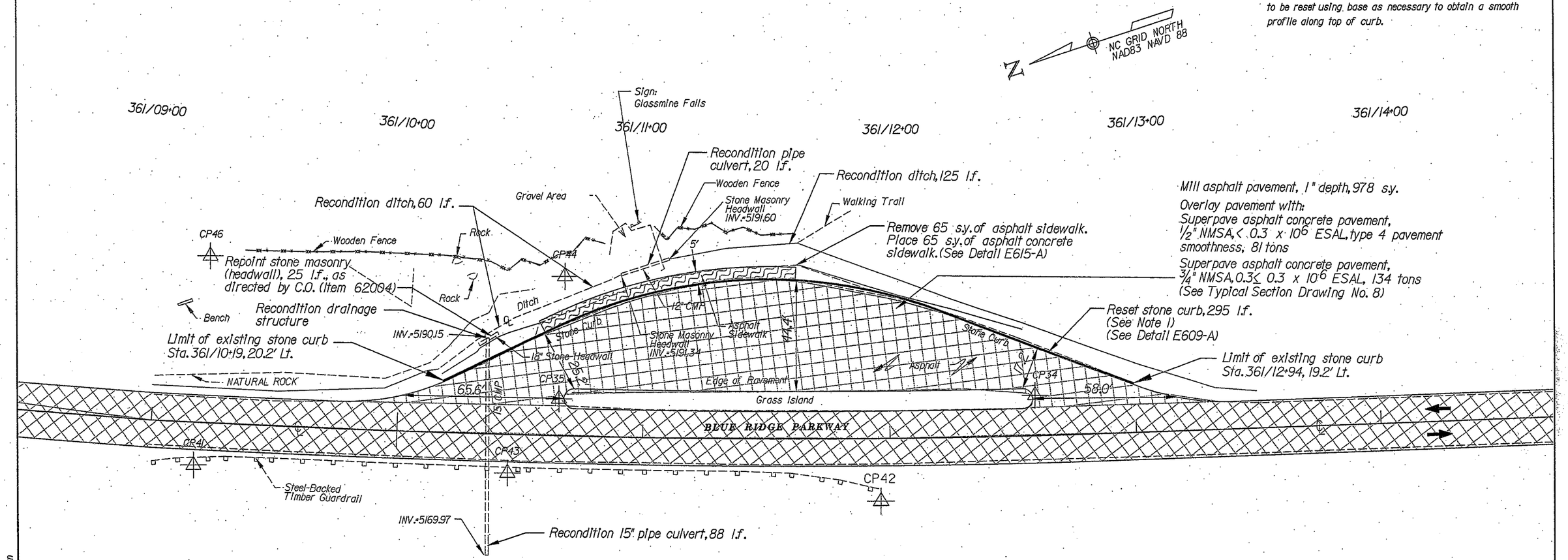

Control Points				
No.	Northing	Easting	Elevation	Description
CP34	738784.8310	1007637.8440	5199.40	SAGPS-34 MON.
CP35	738968.8980	1007696.7730	5193.83	SAGPS-35 MON.
CP41	739118.3110	1007717.9440	5186.84	SA-41 IPS
CP42	738857.7050	1007617.0000	5201.06	SA-42 IPS
CP43	738997.9410	1007674.9960	5192.82	SA-43 N/R
CP44	738951.2630	1007742.7680	5193.54	SA-44 IPS
CP46	739085.4310	1007795.5700	5209.68	SA-46 IPS

0 20 40
SCALE IN FEET

U.S. DEPARTMENT OF TRANSPORTATION
FEDERAL HIGHWAY ADMINISTRATION
EASTERN FEDERAL LANDS HIGHWAY DIVISION
STERLING, VIRGINIA

GLASSMINE FALLS PARKING OVERLOOK PLAN

7/10/2008 1:23:14 PM G:\tra\CT052885\TRA\FINAL_MOD_7\Plan_glassmine_01.dgn

NPS NO.	REG	STATE	PROJECT	SHEET NO.	TOTAL SHEETS
601 / 43918	SE	NC	PRA-BLR1-2P14	68	166

Notes:
1. Replace any broken curb with stone curb matching in appearance to existing curb. Existing stone curb is to be reset using base as necessary to obtain a smooth profile along top of curb.

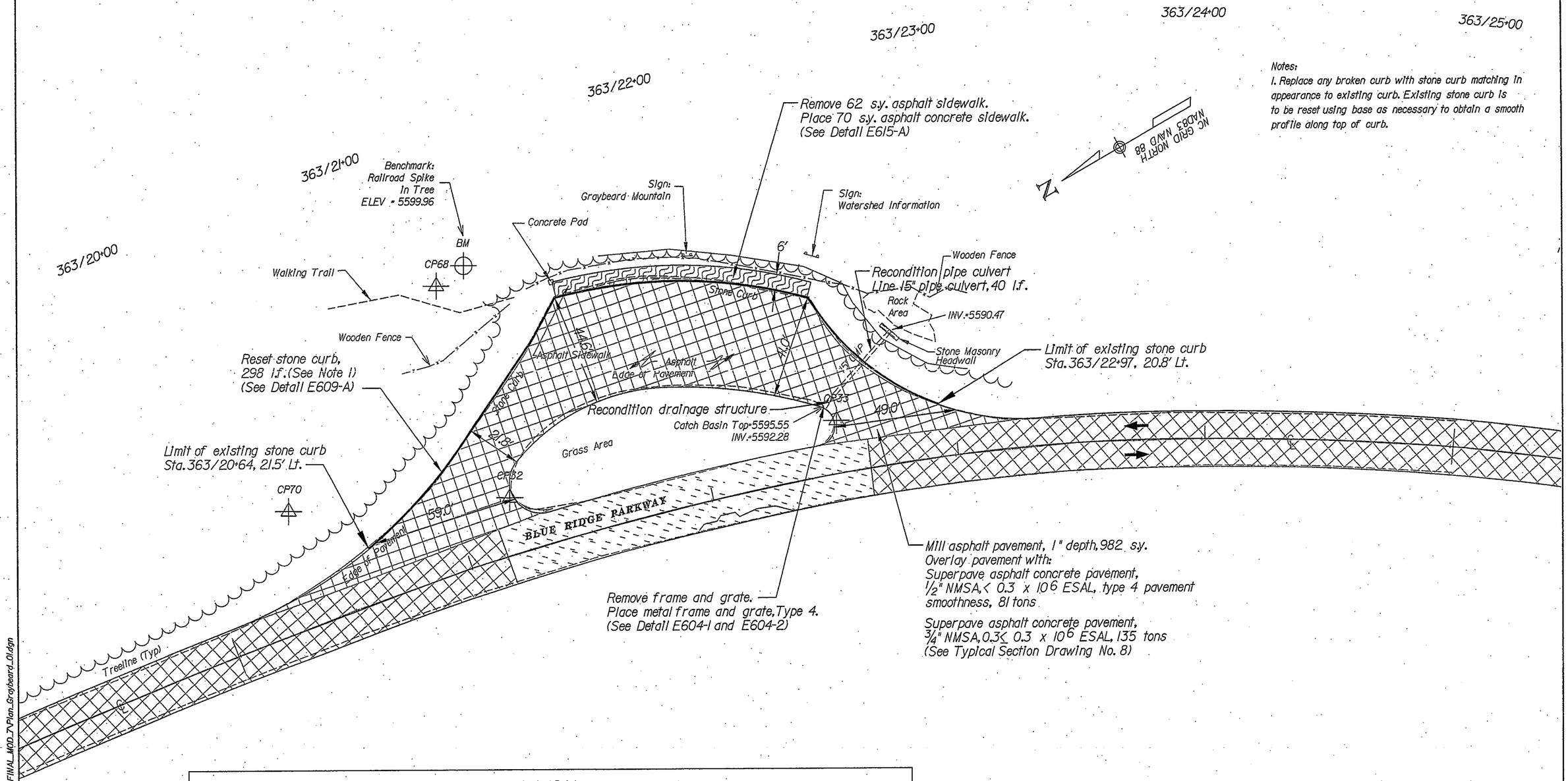

Control Points				
No.	Northing	Easting	Elevation	Description
CP32	730697.5780	1001483.0640	5597.75	SA GPS 32 MON.
CP33	730567.9190	1001444.4470	5595.60	SA GPS 33 MON.
CP68	730681.7770	1001570.9040	5599.85	SA 68 IPS
CP70	730777.9050	1001522.5630	5600.09	SA 70 IPS

0 20 40
SCALE IN FEET

U.S. DEPARTMENT OF TRANSPORTATION
FEDERAL HIGHWAY ADMINISTRATION
EASTERN FEDERAL LANDS HIGHWAY DIVISION
STERLING, VIRGINIA

GRAYBEARD MOUNTAIN PARKING OVERLOOK PLAN

7/10/2008 1:23:44 PM G:\fro\CT052885\TRA\FINAL_MOD_7\Plan_Graybeard_01.dgn

NPS NO.	REG	STATE	PROJECT	SHEET NO.	TOTAL SHEETS
601 / 43918	SE	NC	PRA-BLRI-2P14	69	166

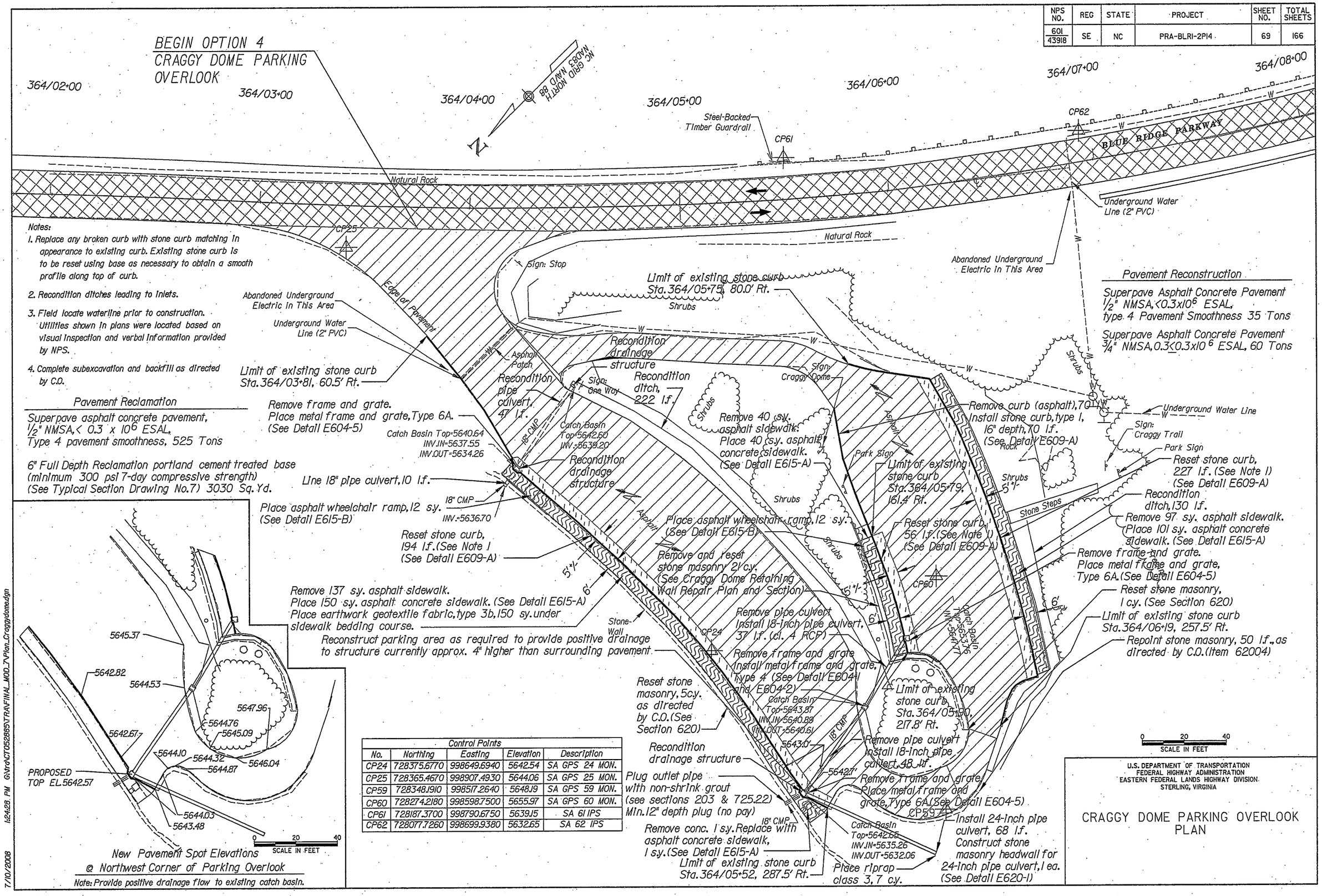

Notes:

1. Replace any broken curb with stone curb matching in appearance to existing curb. Existing stone curb is to be reset using base as necessary to obtain a smooth profile along top of curb.
2. Recondition ditches leading to inlets.
3. Field locate waterline prior to construction. Utilities shown in plans were located based on visual inspection and verbal information provided by NPS.
4. Complete subexcavation and backfill as directed by C.O.

Pavement Reclamation

Superpave asphalt concrete pavement, 1/2" NMSA, < 0.3 x 10^6 ESAL, Type 4 pavement smoothness, 525 Tons

6" Full Depth Reclamation portland cement treated base (minimum 300 psi 7-day compressive strength) (See Typical Section Drawing No.7) 3030 Sq. Yd.

Pavement Reconstruction

Superpave Asphalt Concrete Pavement 1/2" NMSA, <0.3x10^6 ESAL, type 4 Pavement Smoothness 35 Tons

Superpave Asphalt Concrete Pavement 3/4" NMSA, 0.3<0.3x10^6 ESAL, 60 Tons

New Pavement Spot Elevations @ Northwest Corner of Parking Overlook

Note: Provide positive drainage flow to existing catch basin.

Control Points				
No.	Northing	Easting	Elevation	Description
CP24	728375.6770	998649.6940	5642.54	SA GPS 24 MON.
CP25	728365.4670	998907.4930	5644.06	SA GPS 25 MON.
CP59	728348.1910	998517.2640	5648.19	SA GPS 59 MON.
CP60	728274.2180	998598.7500	5655.97	SA GPS 60 MON.
CP61	728187.3700	998790.6750	5639.15	SA 61 IPS
CP62	728077.7260	998699.9380	5632.65	SA 62 IPS

U.S. DEPARTMENT OF TRANSPORTATION
FEDERAL HIGHWAY ADMINISTRATION
EASTERN FEDERAL LANDS HIGHWAY DIVISION
STERLING, VIRGINIA

CRAGGY DOME PARKING OVERLOOK PLAN

7/10/2008 1:24:28 PM G:\tro\CT052885\TRAFINAL_MOD_7\Plan_Craggydome.dgn

NPS NO.	REG	STATE	PROJECT	SHEET NO.	TOTAL SHEETS
601 / 43918	SE	NC	PRA-BLRI-2P14	70	166

Control Points				
No.	Northing	Easting	Elev.	Description
CP16	727001.6580	996898.6060	5502.59	SA GPS 16 MON.
CP63	726891.3990	996821.5170	5500.85	SA GPS 63 MON.
CP64	726836.5420	996785.0010	5500.75	SA GPS 64 MON.

Notes:
1. Replace any broken curb with stone curb matching in appearance to existing curb. Existing stone curb is to be reset using base as necessary to obtain a smooth profile along top of curb.
2. Utility locations shown in plans were located based on visual inspection and verbal information provided by NPS.

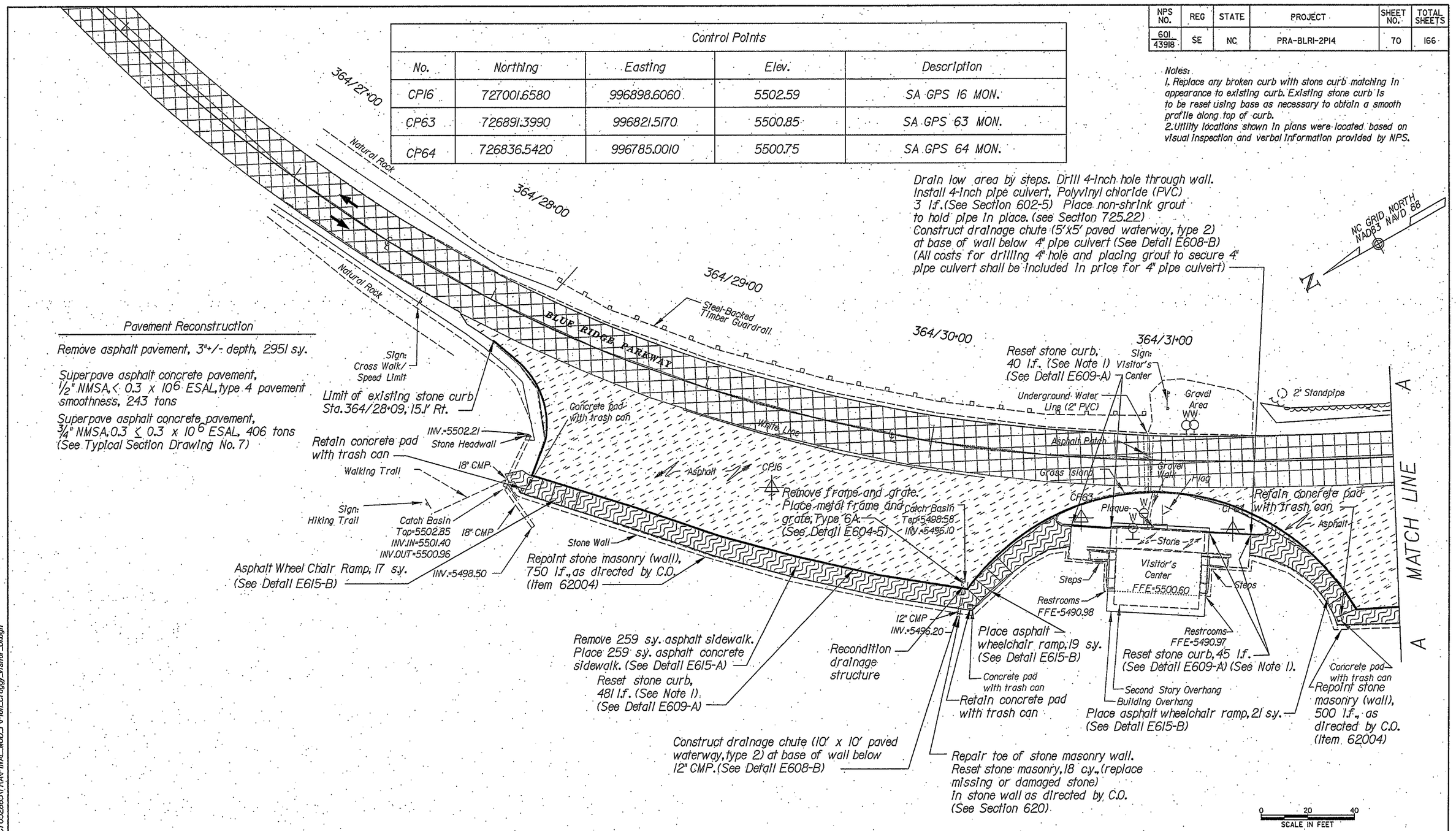

U.S. DEPARTMENT OF TRANSPORTATION
FEDERAL HIGHWAY ADMINISTRATION
EASTERN FEDERAL LANDS HIGHWAY DIVISION
STERLING, VIRGINIA

CRAGGY GARDENS VISITOR CENTER PARKING AREA PLAN

7/11/2008 9:41:26 AM G:\tra\CT052885\TRA\FINAL_MOD_7\Plan_Craggy_visitor_01.dgn

NPS NO.	REG	STATE	PROJECT	SHEET NO.	TOTAL SHEETS
601 / 43918	SE	NC	PRA-BLRI-2P14	71	166

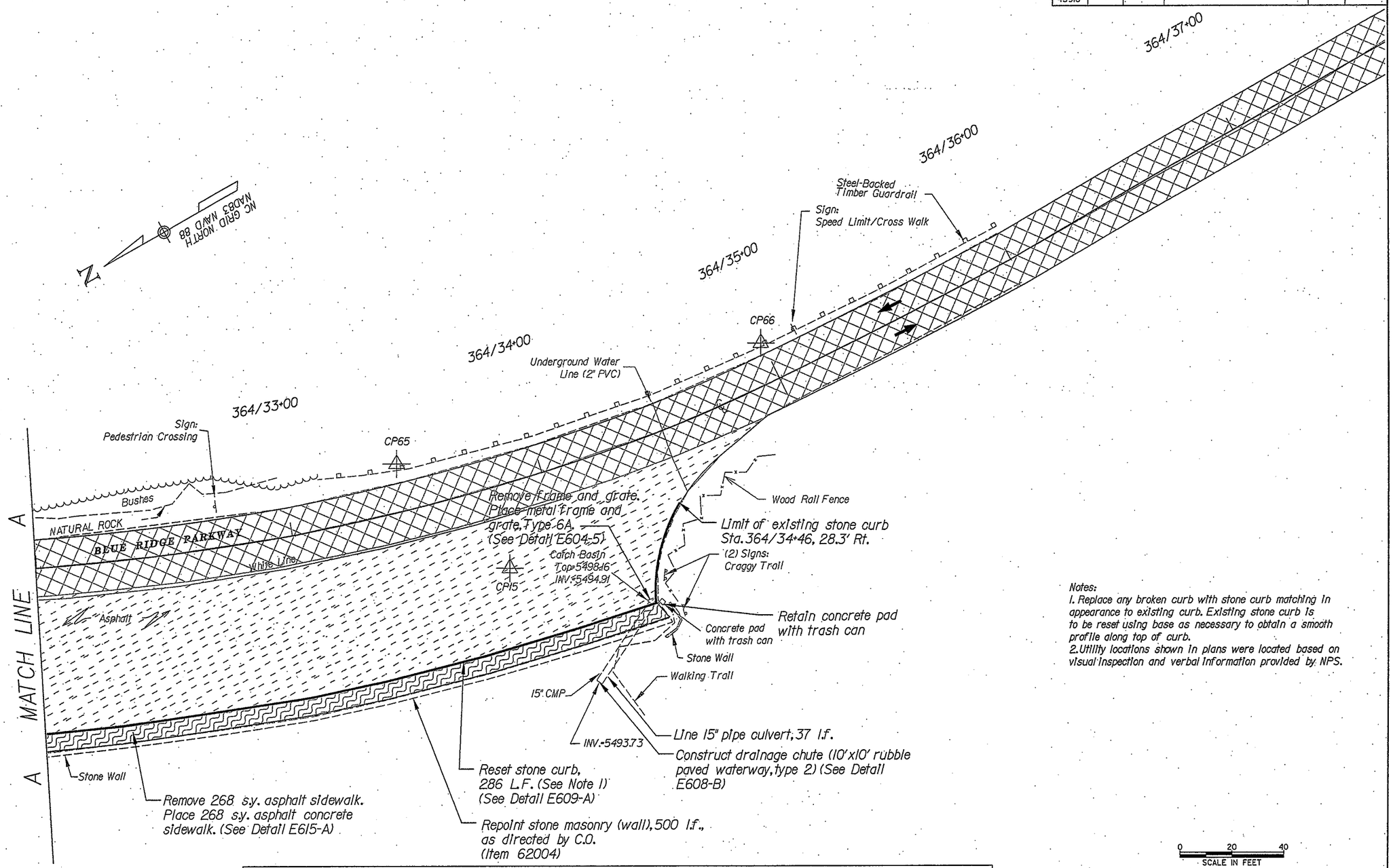

Notes:
1. Replace any broken curb with stone curb matching in appearance to existing curb. Existing stone curb is to be reset using base as necessary to obtain a smooth profile along top of curb.
2. Utility locations shown in plans were located based on visual inspection and verbal information provided by NPS.

0 20 40
SCALE IN FEET

Control Points

No.	Northing	Easting	Elevation	Description
CP15	726600.4680	996687.5360	5498.92	SA GPS 15 MON.
CP65	726619.0820	996744.3570	5496.51	SA 65 IPS
CP66	726472.3240	996715.2950	5495.70	SA 66 IPS

U.S. DEPARTMENT OF TRANSPORTATION
FEDERAL HIGHWAY ADMINISTRATION
EASTERN FEDERAL LANDS HIGHWAY DIVISION
STERLING, VIRGINIA

CRAGGY GARDENS VISITOR CENTER PARKING AREA PLAN

7/11/2008 9:41:38 AM G:\Proj\CT052885\TRAV\FINAL_MOD_7\Plan_Craggy_Visitor_02.dgn

NPS NO.	REG	STATE	PROJECT	SHEET NO.	TOTAL SHEETS
601 / 43918	SE	NC	PRA-BLRI-2P14	72	166

Notes:
1. Replace any broken curb with stone curb matching in appearance to existing curb. Existing stone curb is to be reset using base as necessary to obtain a smooth profile along top of curb.

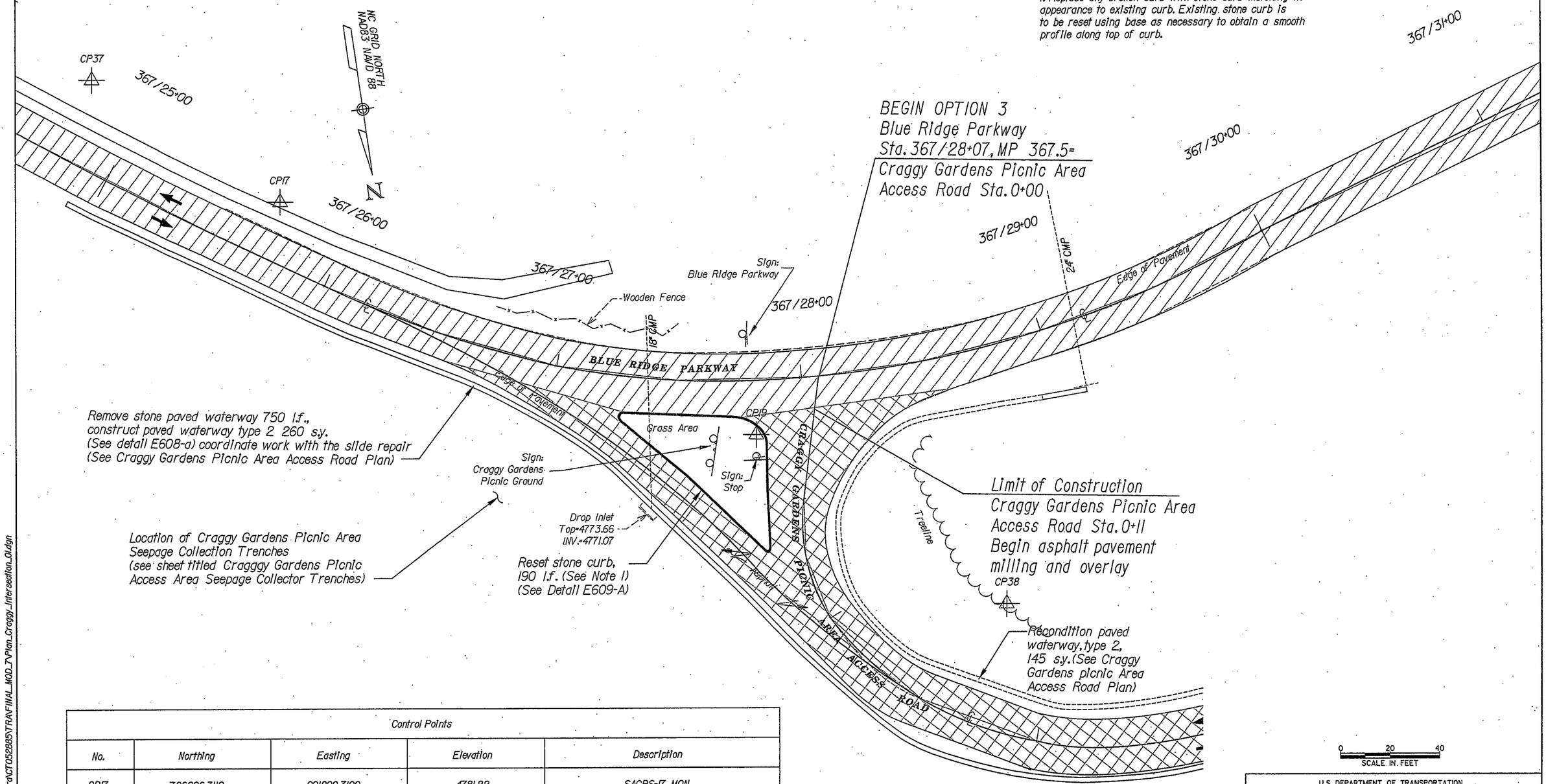

Control Points				
No.	Northing	Easting	Elevation	Description
CP17	726206.3110	991290.3100	4781.22	SAGPS-17 MON.
CP19	726327.7970	991111.4250	4773.24	SAGPS-19A MON.
CP37	726146.2260	991359.5880	4784.27	SA-37 IPS
CP38	726410.4660	991019.9790	4782.56	SA-38 IPS

U.S. DEPARTMENT OF TRANSPORTATION
FEDERAL HIGHWAY ADMINISTRATION
EASTERN FEDERAL LANDS HIGHWAY DIVISION
STERLING, VIRGINIA

CRAGGY GARDENS PICNIC AREA ACCESS RD. INTERSECTION PLAN

7/10/2008 1:27:28 PM G:\TraCT052885\TRAFINAL_MOD_7\Plan_Craggy_Intersection_01.dgn

NPS NO.	REG	STATE	PROJECT	SHEET NO.	TOTAL SHEETS
601 / 43918	SE	NC	PRA-BLRI-2P14	73	166

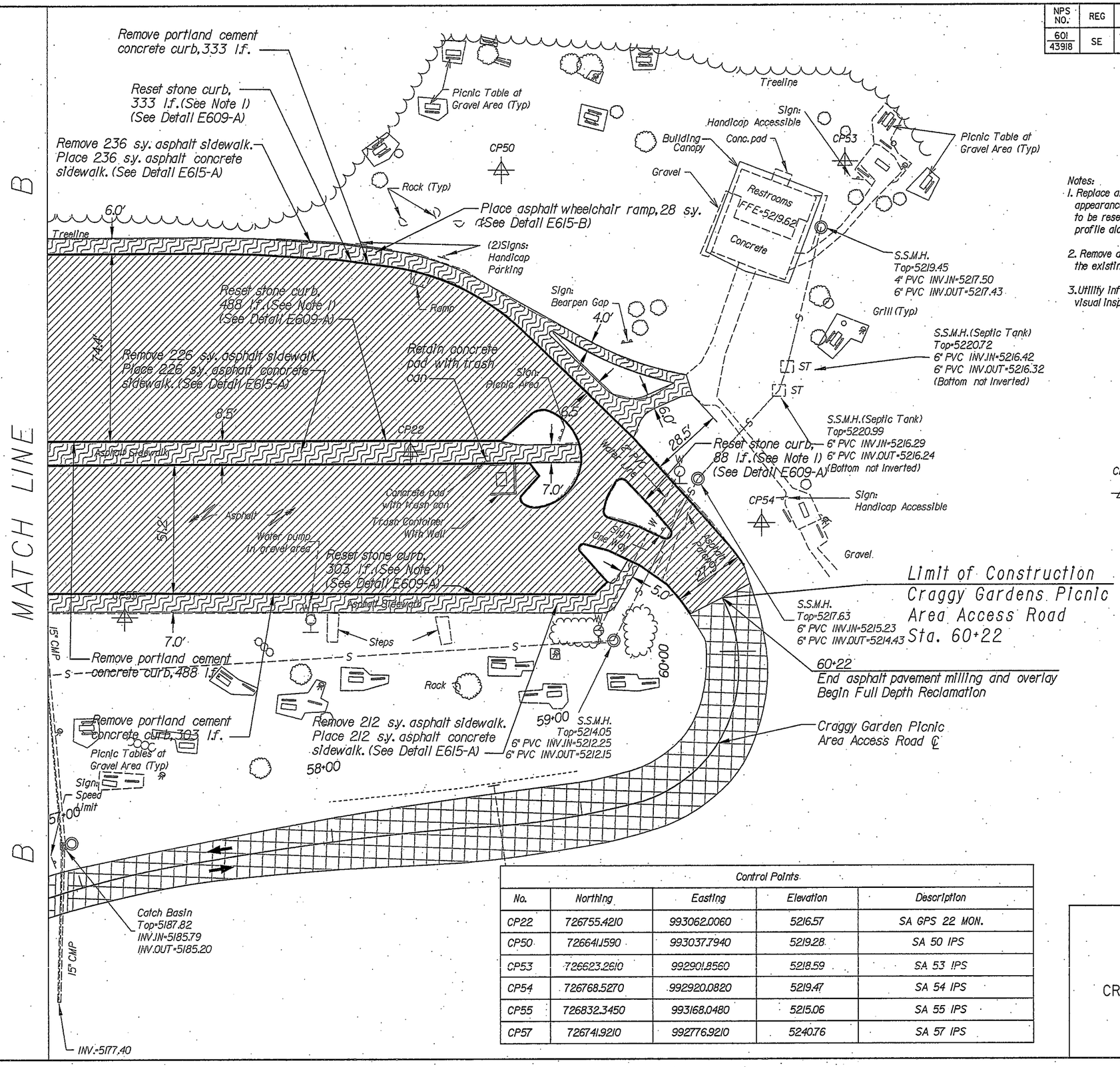

Notes:

1. Replace any broken curb with stone curb matching in appearance to existing curb. Existing stone curb is to be reset using base as necessary to obtain a smooth profile along top of curb.
2. Remove all existing portland cement concrete curb behind the existing stone curb throughout the parking area.
3. Utility information shown in plans were located based on visual inspection and verbal information provided by NPS.

Control Points

No.	Northing	Easting	Elevation	Description
CP22	726755.4210	993062.0060	5216.57	SA GPS 22 MON.
CP50	726641.1590	993037.7940	5219.28	SA 50 IPS
CP53	726623.2610	992901.8560	5218.59	SA 53 IPS
CP54	726768.5270	992920.0820	5219.47	SA 54 IPS
CP55	726832.3450	993168.0480	5215.06	SA 55 IPS
CP57	726741.9210	992776.9210	5240.76	SA 57 IPS

0 20 40
SCALE IN FEET

U.S. DEPARTMENT OF TRANSPORTATION
FEDERAL HIGHWAY ADMINISTRATION
EASTERN FEDERAL LANDS HIGHWAY DIVISION
STERLING, VIRGINIA

CRAGGY GARDENS PICNIC AREA PARKING PLAN

7/10/2008 1:27:50 PM G:\ro\CT052885\TRAFINAL_MOD_7\Plan_Craggy_Picnic_01.dgn

NPS NO.	REG	STATE	PROJECT	SHEET NO.	TOTAL SHEETS
601 43918	SE	NC	PRA-BLRI-2P14	74	166

Notes:
1. Replace any broken curb with stone curb matching in appearance to existing curb. Existing stone curb is to be reset using base as necessary to obtain a smooth profile along top of curb.
2. Remove all existing portland cement concrete curb behind the existing stone curb throughout the parking area.
3. Utility information shown in plans were located based on visual inspection and verbal information provided by NPS.

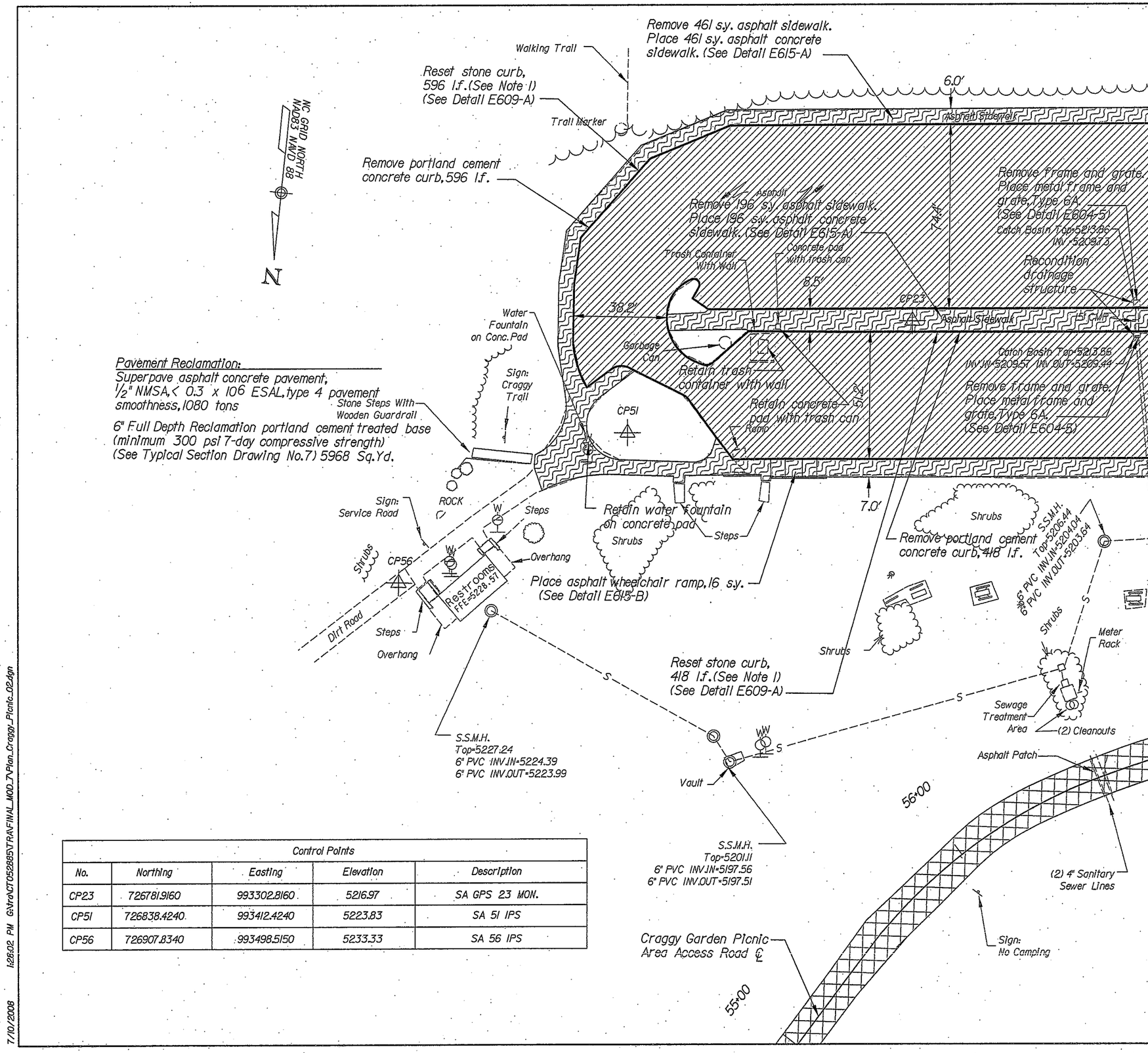

Control Points				
No.	Northing	Easting	Elevation	Description
CP23	726781.9160	993302.8160	5216.97	SA GPS 23 MON.
CP51	726838.4240	993412.4240	5223.83	SA 51 IPS
CP56	726907.8340	993498.5150	5233.33	SA 56 IPS

U.S. DEPARTMENT OF TRANSPORTATION
FEDERAL HIGHWAY ADMINISTRATION
EASTERN FEDERAL LANDS HIGHWAY DIVISION
STERLING, VIRGINIA

CRAGGY GARDENS PICNIC AREA
PARKING PLAN

7/10/2008 1:26:02 PM G:\traCT052885\TRA\FINAL_MOD_7\Plan_Craggy_Picnic_02.dgn

NPS NO.	REG	STATE	PROJECT	SHEET NO.	TOTAL SHEETS
601 / 43918	SE	NC	PRA-BLRI-2P14	75	166

Notes:
1. Replace any broken curb with stone curb matching in appearance to existing curb. Existing stone curb is to be reset using base as necessary to obtain a smooth profile along top of curb.

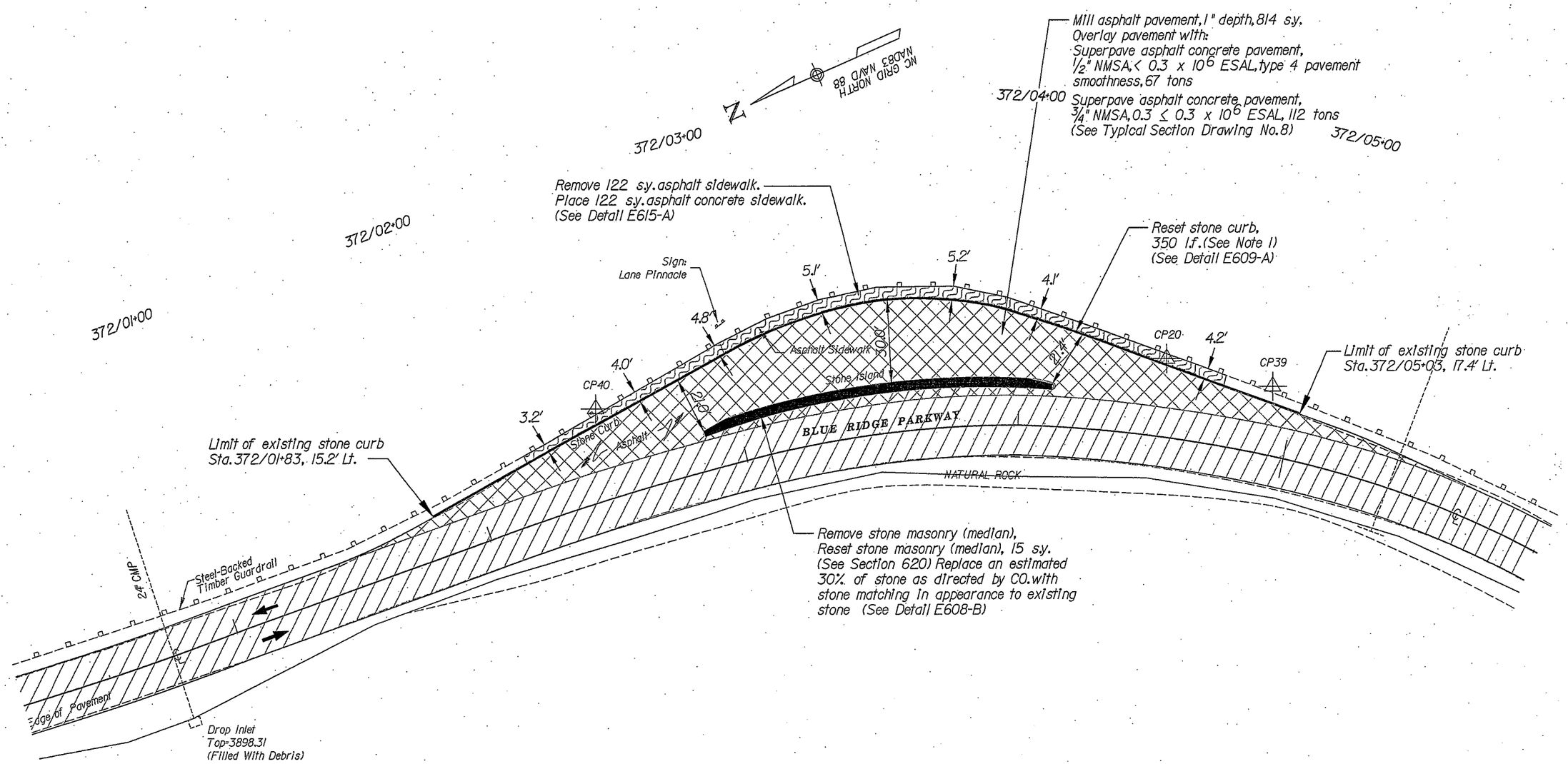

Control Points				
No.	Northing	Easting	Elevation	Description
CP20	715659.3490	977740.3720	3887.54	SAGPS-20 MON.
CP39	715627.6360	977715.1090	3884.38	SA-39 IPS
CP40	715861.2670	977809.7510	3893.18	SA-40 IPS

0 20 40
SCALE IN FEET

U.S. DEPARTMENT OF TRANSPORTATION
FEDERAL HIGHWAY ADMINISTRATION
EASTERN FEDERAL LANDS HIGHWAY DIVISION
STERLING, VIRGINIA

LANES PINNACLE PARKING OVERLOOK PLAN

7/10/2008 1:29:05 PM G:\tra\CT052885\TRA\FINAL_MOD_7\Plan_Lanes_01.dgn

NPS NO.	REG	STATE	PROJECT	SHEET NO.	TOTAL SHEETS
601 / 43918	SE	NC	PRA-BLRI-2P14	76	166

Notes:
1. Replace any broken curb with stone curb matching in appearance to existing curb. Existing stone curb is to be reset using base as necessary to obtain a smooth profile along top of curb.

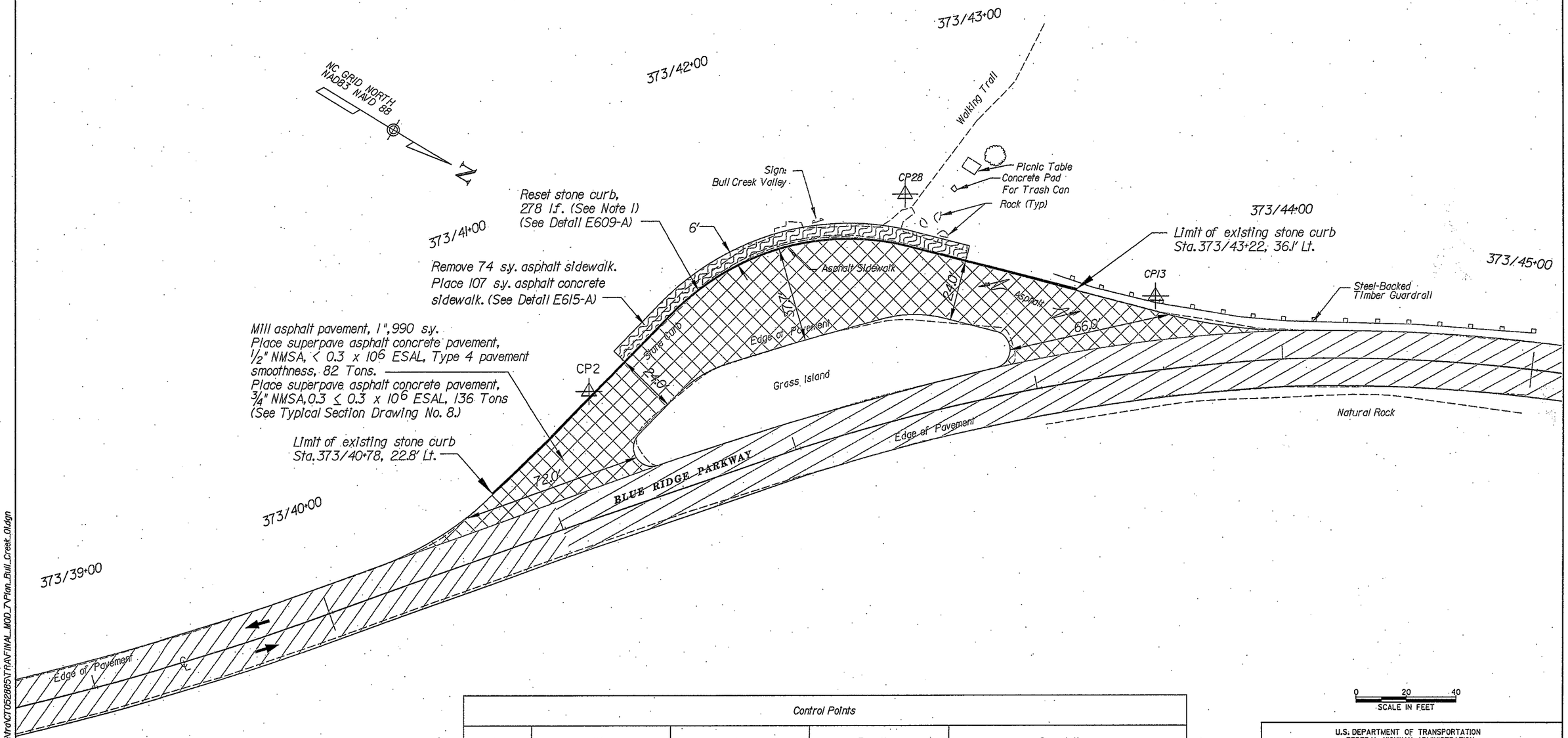

Control Points				
No.	Northing	Easting	Elevation	Description
CP2	711613.0660	973571.5290	3485.82	IPS
CP13	711789.6990	973421.4170	3472.53	IPS
CP28	711681.9530	973438.4280	3475.24	N/R

0 20 40
SCALE IN FEET

U.S. DEPARTMENT OF TRANSPORTATION
FEDERAL HIGHWAY ADMINISTRATION
EASTERN FEDERAL LANDS HIGHWAY DIVISION
STERLING, VIRGINIA

BULL CREEK VALLEY PARKING OVERLOOK PLAN

7/10/2008 1:28:40 PM G:\Proj\CT052885\TRAVFINAL_MOD_7\Plan_Bull_Creek_01.dgn

NPS NO.	REG	STATE	PROJECT	SHEET NO.	TOTAL SHEETS
601 / 43918	SE	NC	PRA-BLRI-2P14	77	166

TRAFFIC CONTROL NOTES

1. Install appropriate traffic control devices before the inception of construction.

2. Use and install traffic control devices in accordance with the standards prescribed in Part 6 of the Manual on Uniform Traffic Control Devices (Current Edition).

3. Construct improvements to overlooks and parking areas concurrently with adjacent Blue Ridge Parkway improvements. Stagger overlook and parking area construction so that no two adjacent areas are closed at the same time.

4. Properly maintain and operate all traffic control devices. Traffic control devices are to be replaced as directed by CO.

5. Remove or cover all regulatory warning signs which are no longer appropriate because of construction.

6. Remove all construction traffic control devices immediately upon completion of project.

7. Maintain ingress and egress to all local properties at all times.

8. Minimum lane width during traffic control is 9 feet. Cones are to be used during day and night construction activities to provide the minimum 9 foot lane requirement, unless directed otherwise by C.O.

9. Due to narrow pavement width, close Craggy Garden's Picnic Area Access Road during construction of roadway improvements from the gate located at Sta. 19+15 to the picnic area. The Access Road may be closed for construction activities between November 1 and May 20. Between May 21 and July 1, the Access Road is to be open to public use during weekends (Friday 3:00 PM to Monday 6:00 AM). Work on the Access Road and the parking area must be completed by July 15.

10. Night time construction activities are not allowed on Craggy Garden's Picnic Area Access Road or at the Craggy Garden's Picnic Area to protect an endangered / threatened species. Night time is defined as sunset to sunrise.

11. Night time construction activities are allowed on the Parkway.

12. A landing for drum placement must be constructed at the end of each work day along pavement reclamation or renewal areas so that the lane can be opened to traffic. The landing is to tie to the work zone with a slope no greater than a 3:1. Type A or C lights are to be installed on the drums. A temporary traffic signal to regulate traffic during night time operation of the lane closure is to be used at these locations at the CO's approval. Night time lane closures are to be established in accordance with Detail E635-A.

13. No more pavement may be reclaimed or removed at a time than can be replaced in a work day unless C.O. approval is obtained for the use of a temporary signal. The use of temporary traffic signals should be for situations where the first surface course has not been placed on reclaimed or reconstructed pavement areas. Areas with reclaimed or removed pavement material should not be exposed for more than two days before placement of first surface layer or asphalt pavement and pavement is not to be reclaimed or removed on days when rain is in the forecast.

14. Contractor is only allowed to mill a length of travel lane that can be overlayed with asphalt binder before noon on Fridays. Fine milling heads are to be used to mill pavement that will be open to traffic.

15. Overlay all pavement patched areas, pavement reconstruction, and reclamation areas with one layer of SACP surface prior to opening lane to traffic.

16. For the work at MP361/40+00+/-, MP362/41+00+/-, and MP363/ 21+50+/-, supplement the shoulder with aggregate base to provide a minimum 12' wide travel lane, as approved by the CO. work between Monday (6:00 AM) and Friday (12:00 noon).

U.S. DEPARTMENT OF TRANSPORTATION
FEDERAL HIGHWAY ADMINISTRATION
EASTERN FEDERAL LANDS HIGHWAY DIVISION
STERLING, VIRGINIA

BLUE RIDGE PARKWAY

TRAFFIC CONTROL NOTES

7/10/2008 12:08:01 PM G:\Vra\CT052885\TRA\FINAL_MOD_7\TC_Blueridge_notes.dgn

NPS NO.	REG	STATE	PROJECT	SHEET NO.	TOTAL SHEETS
601 / 43918	SE	NC	PRA-BLRI-2P14	78	166

The following sequence of construction is based on the assumption that this project is constructed during typical daylight hours of operations. If the Contractor extends the work day to include road construction activities during the night, the work zone may be lengthened. Maximum length of a lane closure shall be approved by CO.

For milling and overlay operations, the length of the work zone is to be determined by the length of a travel lane that the project contractor can mill and overlay with asphalt binder by noon on Friday. Milled pavement open to traffic is to be signed for 25mph using the black and white supplemental signs. Fine milling heads are to be used to mill pavement that will be open to traffic.

At no time during pavement reclamation or reconstruction activities shall traffic be allowed to run on the base material.

Maintain one lane of traffic at all times through a work zone using traffic signals, flaggers, or both as directed by CO.

A closed sign is to be mounted on existing overlooks, parking areas, and pull-off sign posts within the Parkway work areas.

The sequence of construction is subject to change as directed by the CO.

Sequence of Construction

Option 1

1. No work is to be performed to the roadway pavement between MP 365/27+79 and MP 365/33+83 (Craggy Flats Tunnel). Craggy Garden's Visitor Center Parking Area is to be reclaimed in two stages. Blue Ridge Parkway work zones adjacent to the Craggy Garden's Visitor Center Parking Area are to be set up so that one bay of the Craggy Garden's Visitor Center Parking Area is accessible to visitors at all times. Perform all stone curb and asphalt sidewalk work at Craggy Garden's Visitor Center prior to re-opening a parking bay for public use.

2. Using a flagging operation as needed, perform all drainage related work as shown in the plans between MP 364/21+12 and MP 369/0+00.

3. Use Detail E635-A, day time operation, to close the northbound lane of the Parkway from MP 366/24+10 to MP 368/20+00. If unforeseen circumstances prohibit the contractor from opening the work zone to traffic at the end of the work day or if the Contractor chooses to extend the work day to include night time construction, the Contractor is to establish the lane closure in accordance with Detail 635-A, night time operation.

4. Reclaim northbound lane, up through the first layer of surface course, within the work zone.

5. Place temporary yellow pavement striping. Open lane within the work zone to traffic. Contractor may not run traffic on reclaimed area prior to the placement of the first surface course.

6. Continue closing adjacent sections of the Parkway's northbound lane until the northbound lane from MP 366/24+10 to MP 368/20+00 has been reclaimed up through the first layer of asphalt surface course. Do not place the final layer of asphalt surface course until all other roadway construction activities are complete.

7. Repeat the same process using Detail E635-A to reclaim the pavement along the southbound lanes from MP 366/24+10 to MP 368/20+00 as shown in the plans.

8. Use Detail E635-A, day time operation, to close the northbound lane of the Parkway from MP 364/21+12 to MP 366/24+10.

9. Mill northbound lane within the work zone and place asphalt binder course atop milled pavement.

10. Place temporary yellow pavement striping. Open lane to traffic.

11. Continue closing adjacent sections of the Parkway's northbound lane until the northbound lane from MP 364/21+12 to MP 366/24+10 has been milled and overlayed with asphalt binder course. Do not place the final layer of asphalt surface course until all other roadway construction activities are complete.

12. Repeat the same process using Detail E635-A, day time operation, to mill and overlay the pavement along the southbound lane of the Parkway from MP 364/21+12 to MP 366/24+10. Do not place the final asphalt surface course until all other roadway construction activities are complete.

13. Repeat steps 8-12 to improve the Parkway from MP 368/20+00 to 369/00+00.

Option 2

1. Coordinate staging area location with C.O..

2. Perform all stone curb and asphalt sidewalk work at an overlook prior to re-opening that overlook for public use. Complete work at Balsam Gap, Glassmine Falls and Graybeard Mountain Parking Overlooks prior to re-opening overlook for public use.

3. Using a flagging operation as needed, perform all drainage related work as shown in the plans between MP 359/39+00 and MP 364/21+12

4. Use Detail E635-A, day time operation, to close the northbound lane of the Parkway from MP 359/39+00 to MP 360/20+50.

5. Mill northbound lane within the work zone and place asphalt binder course atop milled pavement.

6. Place temporary yellow pavement striping. Open lane to traffic.

Option 2 (Continued)

7. Continue closing adjacent sections of the Parkway's northbound lane until the northbound lane from MP 359/39+00 to MP 364/21+12 has been milled and overlayed with asphalt binder course. Note that the northbound lane between MP 361/39+75 and MP 361/41+55, MP 362/40+85 and MP 362/42+30, and between MP 363/21+15 and MP 363/22+65 is to be reconstructed as part of this phase of work. Do not place the final layer of asphalt surface course until all other roadway construction activities are complete.

8. Repeat the same process using Detail E635-A, day time operation, to mill and overlay the pavement along the southbound lane of the Parkway from MP 359/39+00 to MP 364/21+12. The southbound lane between MP 361/39+75 and MP 361/41+55, MP 362/40+85 and MP 362/42+30, and between MP 363/21+15 and MP 363/22+65 is to be reconstructed as part of this phase of work. Do not place the final asphalt surface course until all other roadway construction activities are complete.

Option 4

1. Close Craggy Dome Parking Overlook to traffic and construct improvements. Perform all wall, stone curb and asphalt sidewalk work at Craggy Dome Parking Overlook, prior to re-opening overlook for public use. Construct Craggy Dome Parking Overlook improvements in conjunction with Craggy Garden's Picnic Area in Option 3. If Option 4 & 3 are constructed during this project.

Phase 1 (Schedule A)

1. Using a flagging operation as needed, perform all drainage related work as shown in the plans between MP 369/00+00 and MP 375/4+56.

Phase 2 (Schedule A)

1. Continue closing adjacent sections of the Parkway's southbound lane using Detail E635-A until the southbound lane from MP 369/0+00 to MP 370/2+00 has been milled and overlayed with asphalt binder course. Do not place the asphalt surface course until all other roadway construction activities are complete.

2. Repeat the same process using Detail E635-A to mill and overlay the pavement along the northbound lane from MP 369/0+00 to MP 370/2+00 as shown in the plans.

Phase 3 (Schedule A)

1 Use Detail E635-A, day time operation, to close the northbound lane of the Parkway from MP 370/2+00 to MP 370/6+00. If unforeseen circumstances prohibit the contractor from opening the work zone to traffic at the end of the work day or if the Contractor chooses to extend the work day to include night time construction, the Contractor is to establish the lane closure in accordance with Detail 635-A, night time operation.

2. Reclamate northbound lane, up through the first layer of surface course, within the work zone.

3. Place temporary yellow pavement striping. Open lane within the work zone to traffic. Contractor may not run traffic on the reclamated area prior to the placement of the first surface course layer.

4. Continue closing adjacent sections of the Parkway's northbound lane until the northbound lane from MP 370/2+00 to MP 375/4+56 has been reclaimed and placement through the first layer of the asphalt surface course. Do not place the final asphalt surface course until all other roadway construction activities are complete. No work is to be performed to the roadway pavement between MP 374/20+37 and MP 374/30+01 (Tanbark Ridge Tunnel).

5. Repeat the same process using Detail E635-A to reclaim the pavement along the southbound lanes from MP 370/2+00 to MP 375/4+56 as shown in the plans. No work is to be performed to the roadway pavement between MP 374/20+37 and MP 374/30+01 (Tanbark Ridge Tunnel).

Phase 4 (Schedule A, Option 1, Option 2, Option 3, & Option 4)

1. Using a flagging operation as needed, place final asphalt surface course as shown in plans.

2. Place permanent pavement markings along the Parkway, Overlooks and Parking Areas.

3. Complete all other construction activities.

4. Clean up all construction activities.

U.S. DEPARTMENT OF TRANSPORTATION
FEDERAL HIGHWAY ADMINISTRATION
EASTERN FEDERAL LANDS HIGHWAY DIVISION
STERLING, VIRGINIA

BLUE RIDGE PARKWAY

TEMPORARY TRAFFIC CONTROL
SEQUENCE OF CONSTRUCTION

7/10/2008 12:08:22 PM G:\tra\CT052885\TRAFFINAL_MOD_TTC_Sequence.dgn

NPS NO.	REG	STATE	PROJECT	SHEET NO.	TOTAL SHEETS
601 / 43918	SE	NC	PRA-BLRI-2P14	79	166

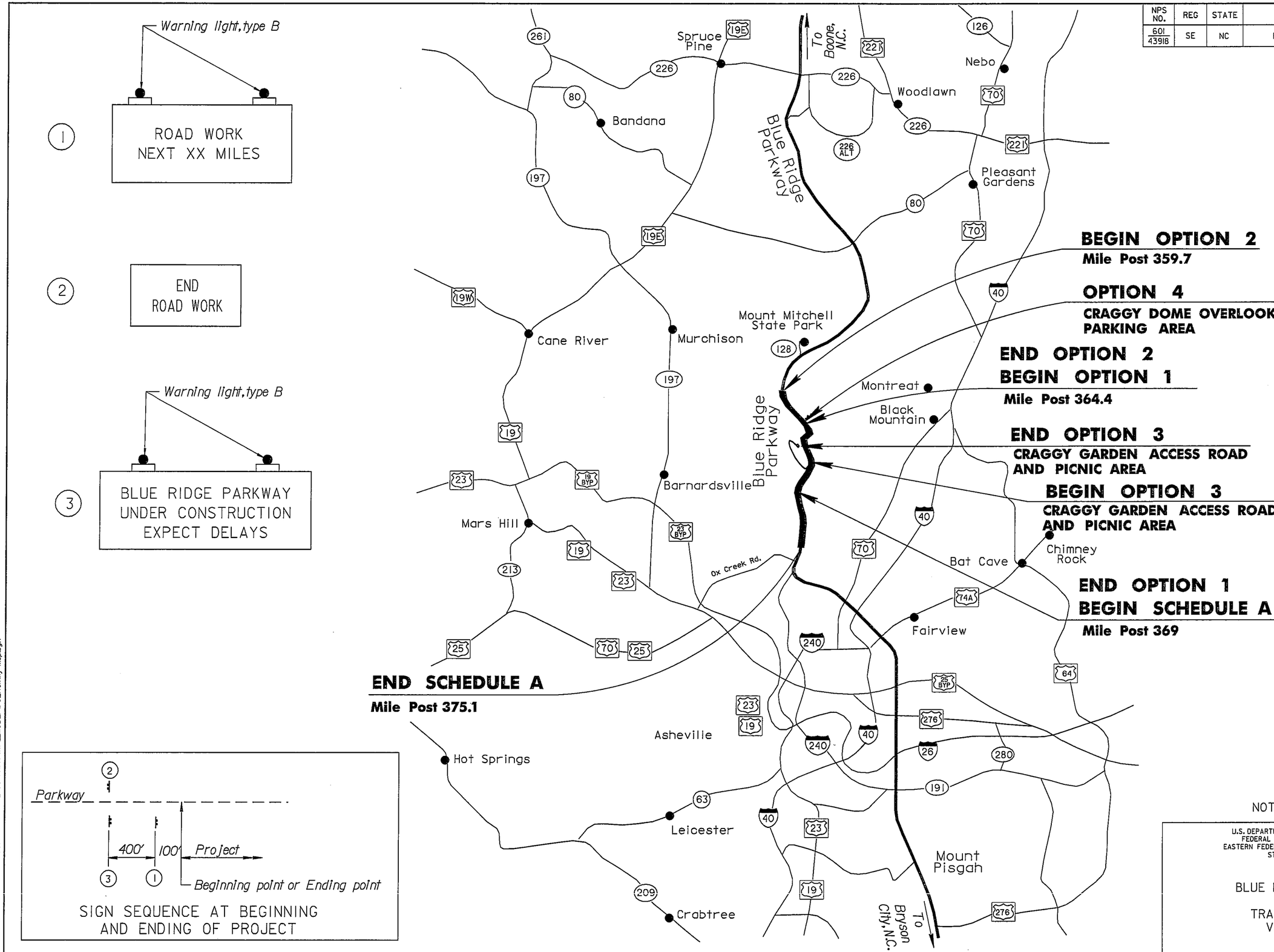

NOT TO SCALE

U.S. DEPARTMENT OF TRANSPORTATION
FEDERAL HIGHWAY ADMINISTRATION
EASTERN FEDERAL LANDS HIGHWAY DIVISION
STERLING, VIRGINIA

BLUE RIDGE PARKWAY

TRAFFIC CONTROL VICINITY MAP

7/10/2008 12:08:33 PM G:\tra\CT052885\TRA\FINAL_MOD_7\TC_vicinity map.dgn

NPS NO.	REG	STATE	PROJECT	SHEET NO.	TOTAL SHEETS
601 / 43918	SE	NC	PRA-BLRI-2P14	80	166

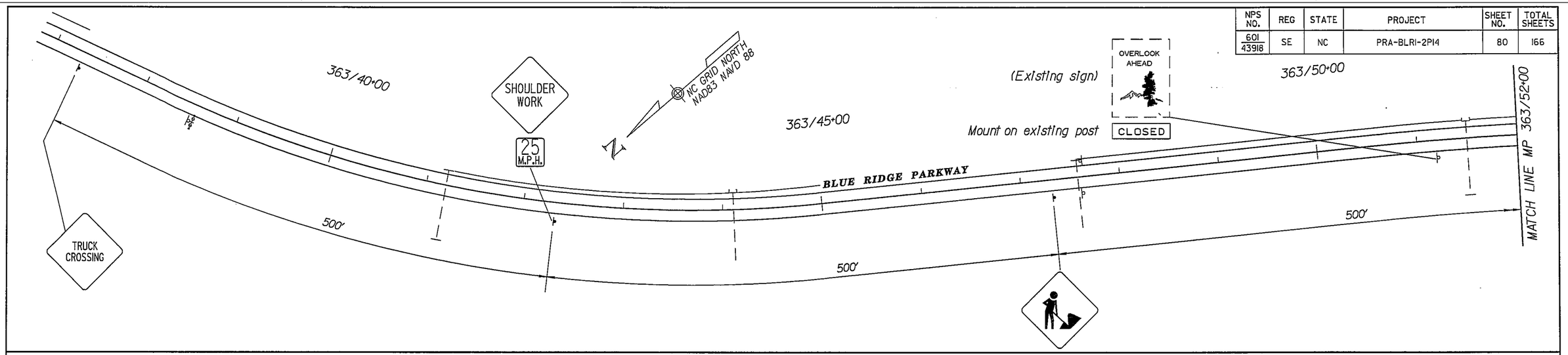

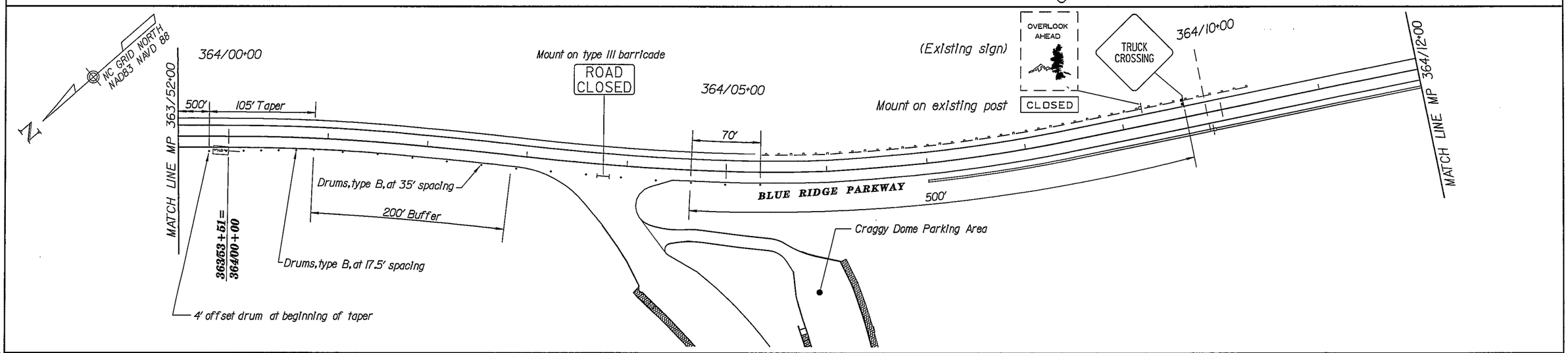

Note:

These plans are subject to change as directed by the CO.

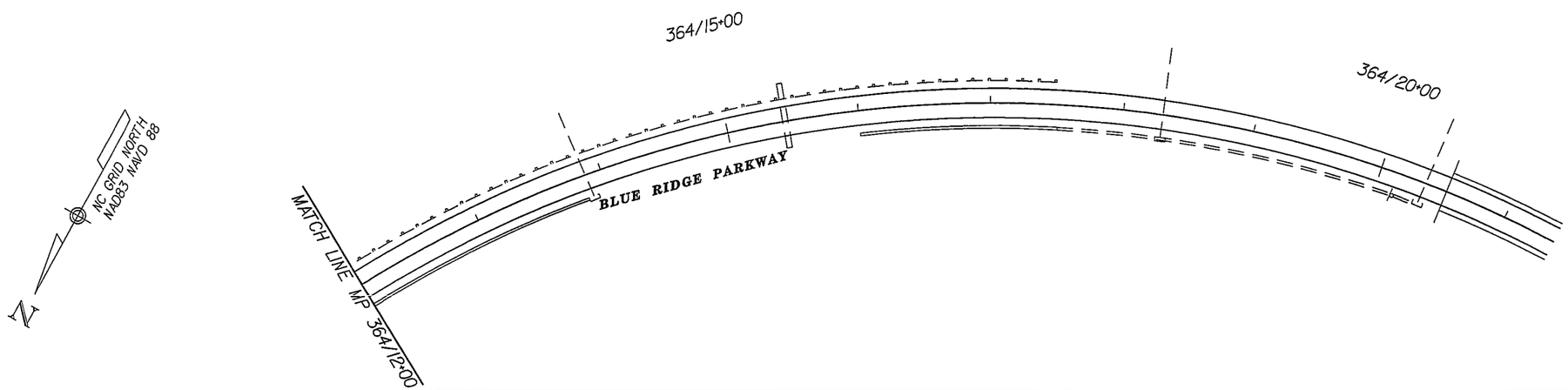

0 50 100
SCALE IN FEET

U.S. DEPARTMENT OF TRANSPORTATION
FEDERAL HIGHWAY ADMINISTRATION
EASTERN FEDERAL LANDS HIGHWAY DIVISION
STERLING, VIRGINIA

TEMPORARY TRAFFIC CONTROL

CRAGGY DOME PARKING AREA CLOSURE

7/10/2008 12:20:41 PM G:\traCT052885\TRA\FINAL_MOD_7\TC_blueridge_00.dgn

NPS NO.	REG	STATE	PROJECT	SHEET NO.	TOTAL SHEETS
601 / 43918	SE	NC	PRA-BLRI-2P14	81	166

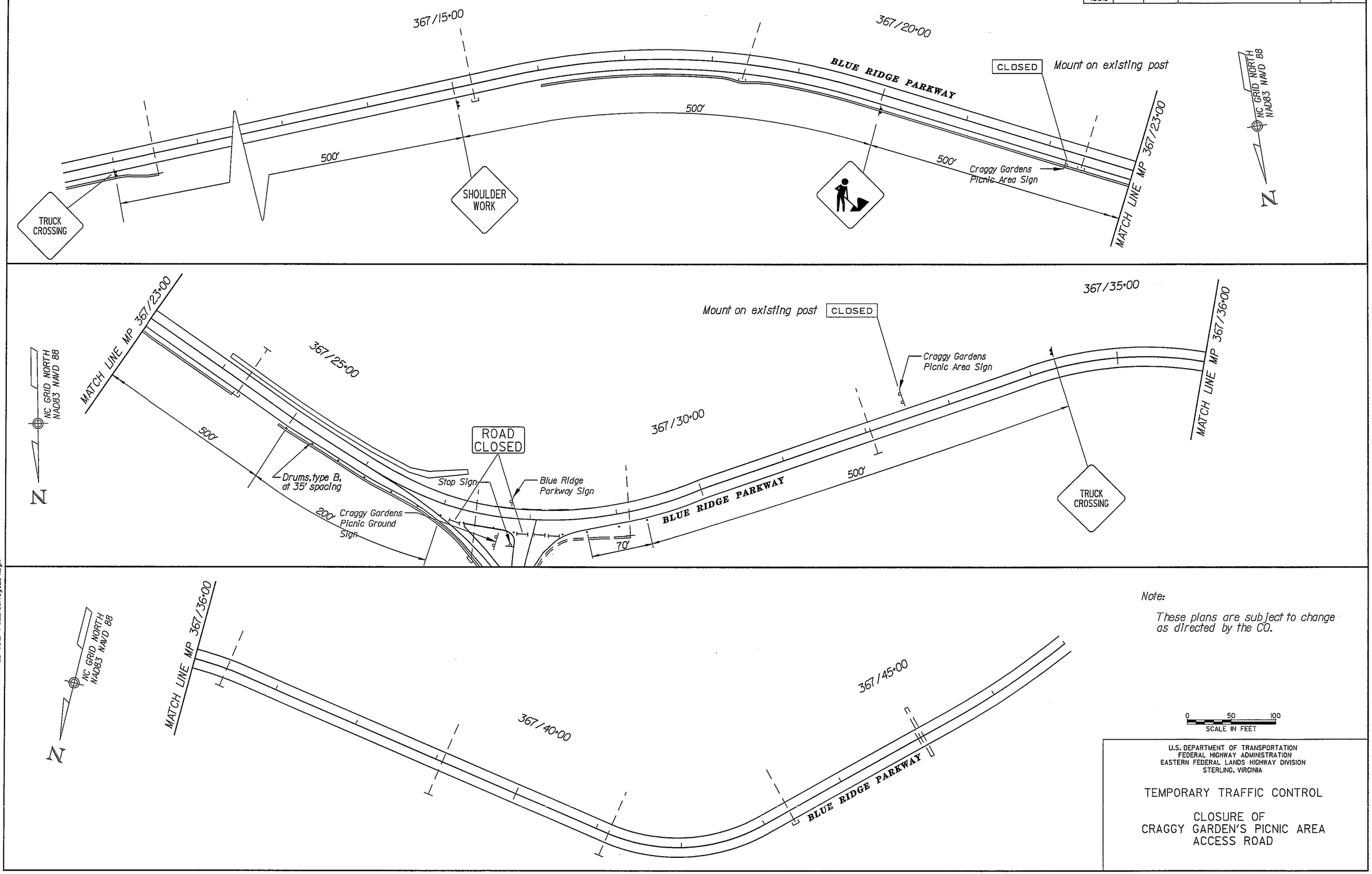

Note:

These plans are subject to change as directed by the CO.

0 50 100
SCALE IN FEET

U.S. DEPARTMENT OF TRANSPORTATION
FEDERAL HIGHWAY ADMINISTRATION
EASTERN FEDERAL LANDS HIGHWAY DIVISION
STERLING, VIRGINIA

TEMPORARY TRAFFIC CONTROL

CLOSURE OF
CRAGGY GARDEN'S PICNIC AREA
ACCESS ROAD

7/10/2008 12:21:03 PM G:\Fra\CT052885\TRAFFINAL_MOD_TTC_Blueridge_04.dgn

GENERAL GUIDELINES

The following are guidelines for preventing erosion and controlling sediment. The work consists of applying measures throughout the life of the project to control erosion and to minimize the sedimentation of rivers, streams, and the adjacent and nearby located impoundments such as lakes and reservoirs. The measures consist of stabilization and structural practices, stormwater controls, and other miscellaneous pollution prevention controls. Soil erosion control and turf establishment measures are also defined and outlined in the Standard Specifications for Construction of Roads and Bridges on Federal Highway Projects, FP-96, and the Special Contract Requirements.

Coordinate the installation, use, and removal of erosion and sediment control measures with roadway construction activities to assure economical, effective, and continuous erosion and sediment control. Employ temporary stabilization practices in incremental stages as construction proceeds.

Install all erosion control measures as shown in the plans or as directed by the Contracting Officer (CO). Stabilize all disturbed areas as soon as practical, but no more than 14 days after construction activity has temporarily or permanently ceased.

Erosion control measures shall be used to control sediment generated by the project from leaving the project site via runoff, equipment and any other means.

Construction equipment is not to be driven across flowing waterways.

Preserve existing trees, shrubs and vegetation as much as possible, and where specifically directed by the CO.

All erosion control measures shall be properly maintained and replaced as needed, or as directed by the CO.

SITE DESCRIPTION

Nature of Activity

This project consists of the resurfacing and rehabilitation of 15.4 miles of Blue Ridge Parkway, 1.1 miles of Craggy Garden's Picnic Area Access Road, and adjacent Pull-offs and Parking Areas. The work also consists of sidewalk replacement and the rehabilitation or replacement of culverts and drainage structures. This work will result in a disturbed area of approximately 21 acres.

Sequence of Construction

Phase I - Establish Perimeter Controls

Prior to any construction or staging for the roadway construction work, construct stabilized construction entrances as directed by the CO.

Prior to any clearing, grubbing, reclamation or removal of pavement, removal of paved waterway, removal of guardrail, reconditioning of culverts, reconditioning of drainage structures and ditch reconditioning to ensure that any disturbed sediment does not leave the project site. Perimeter controls include silt fence and inlet protection.

Prior to beginning work, install silt fence along the top of all existing fill slopes within the Parkway construction zone.

Phase II - Intermediate Controls / Stabilization

Apply intermediate controls during pavement reclamation or removal and drainage related operations. Obtain CO's approval of all erosion control measures installed. The CO may direct the installation of certain controls in order to forestall or mitigate potential or existing erosion problems.

Install permanent vegetative erosion control measures immediately after all ditch reconditioning work. Install temporary erosion control measures along areas of removed paved waterway if the waterway will not be reconstructed the same work day.

Apply temporary turf establishment on uncompleted disturbed areas that will remain exposed for more than 14 calendar days or as directed by the CO.

As soon as practical, but not to exceed 14 calendar days, apply permanent turf establishment to finished slopes and ditches according to Sections 624 and 625.

To control erosion during the time periods between seeding seasons, as shown in Section 625, apply temporary mulch in lieu of temporary turf establishment.

When directed by the CO, apply temporary mulch to all disturbed slopes at the end of each day's operations.

Install temporary inlet protection to any inlet, susceptible of receiving sediment laden water. In order to prevent traffic hazards caused by ponded water on the roadway, do not install inlet protection at inlets adjacent to the Parkway.

Provide silt fence around all stockpiled roadway material.

Phase III - Final Controls / Stabilization

After completion of roadway reclamation and rehabilitation activities, perform the following as directed by the CO.

Replace eroded topsoil and seed and mulch area and reapply permanent turf establishment to disturbed areas where vegetation has not established.

Inspect, clean, and repair all culvert outlet protection and stabilized channels.

Remove silt fence and inlet protection only after all upslope and/or surrounding areas are stabilized and vegetation is well established.

Remove all perimeter silt fence only after turf is well established.

Remove all other perimeter controls and erosion and sediment control measures when directed by the CO.

Stabilize all areas that are disturbed due to the removal of sediment control measures.

LOCATION OF SPECIAL RESOURCES OR PROBLEM AREAS

This project is located in the Asheville watershed from the beginning of the project to MP 370/15.00 No fuel storage shall be allowed within the limits of the watershed. No construction generated runoff debris shall leave the job site. Sanitation facilities shall be regularly and properly maintained and secured to prevent turnover.

LIST OF STABILIZATION PRACTICES

Temporary

Temporary stabilization practices used on this project include mulching, temporary seeding, preservation of existing vegetation, and other approved measures. Apply temporary turf establishment at the following application rates, in accordance with Section 157:
seed - 35 lb/acre
mulch (wood fiber) - 1350 lb/acre.

Permanent

Permanent stabilization practices used on this project include permanent seeding with mulching, preservation of existing vegetation, placement of mortared riprap and splash pads and other approved measures. Apply permanent turf establishment in accordance with Section 625 and the Special Contract Requirements.

LIST OF STRUCTURAL PRACTICES

Structural practices used on this project include silt fence, inlet protection measures, outlet protection measures, and other approved measures.

INSPECTION AND MAINTENANCE PROCEDURES FOR CONTROLS

Inspect, maintain, and clean all erosion and sediment control measures according to Section 157. Check erosion and sediment control measures at least weekly, but also within 24 hours after a rain of 0.5 inches or more, and daily during wet weather. Clean erosion and sediment control measures when half full of sediment, or as directed by the CO. Repair sediment control measures as necessary, or as directed by the CO. Replace erosion and sediment control measures that cannot be maintained and those that are damaged by construction activities. If visible sedimentation resulting from construction operations for this project are found off-site, take immediate measures to properly remove the sediment build-up. Maintain written records of inspection and repairs. Provide the CO with copies every month and the entire record at the completion of the project.

U.S. DEPARTMENT OF TRANSPORTATION
FEDERAL HIGHWAY ADMINISTRATION
EASTERN FEDERAL LANDS HIGHWAY DIVISION
STERLING, VIRGINIA

BLUE RIDGE PARKWAY

EROSION AND SEDIMENT CONTROL NARRATIVE

NPS NO.	REG	STATE	PROJECT	SHEET NO.	TOTAL SHEETS
601 / 43918	SE	NC	PRA-BLRI-2P14	83	166

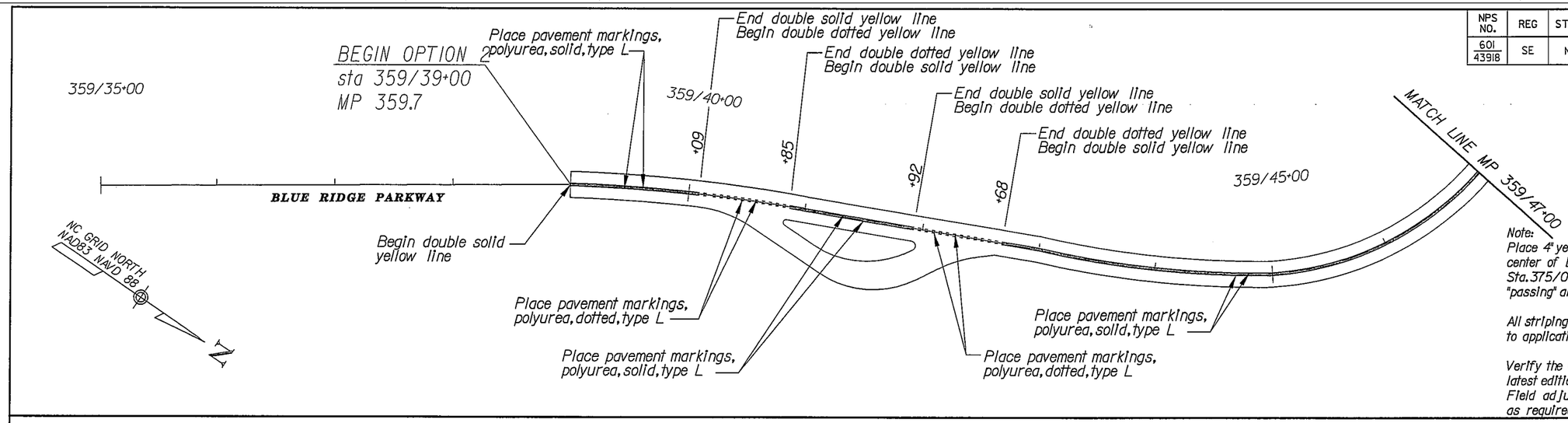

Note:
Place 4" yellow polyurea pavement markings along the center of Blue Ridge Parkway from Sta. 359/39+00 to Sta. 375/04+56. Match existing pavement markings of "passing" and "no passing" zones.

All striping shall be laid out and approved by C.O. prior to application.

Verify the minimum passing sight distance per the latest edition of the MUTCD and Park Road Standards. Field adjust passing zone permanent striping as required.

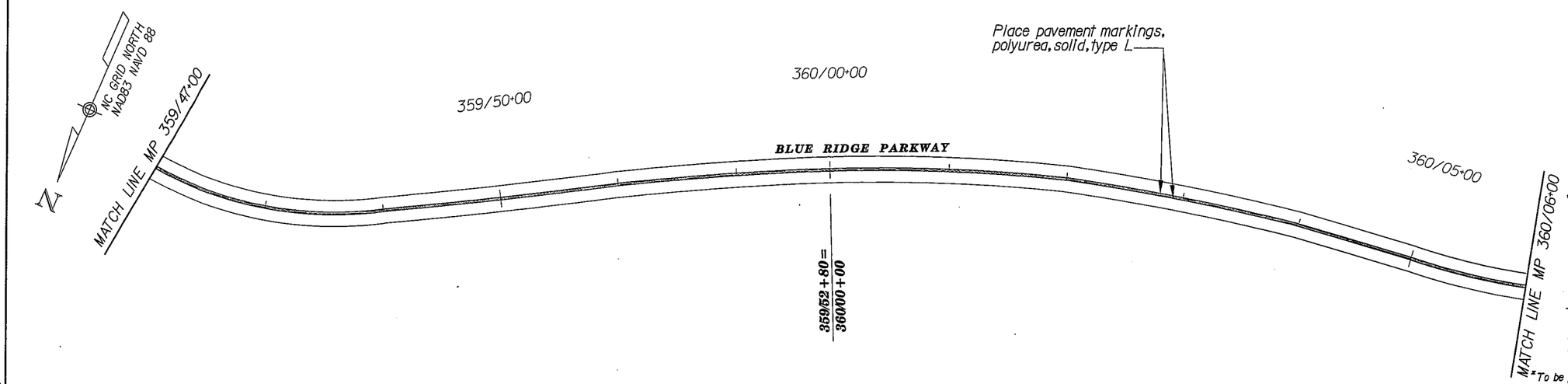

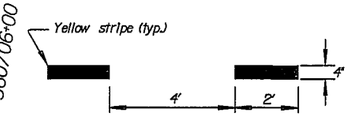

Detail of
*Dotted Yellow Pavement Marking
Not to scale

All striping shall be in accordance with the "Manual on Uniform Traffic Control Devices", latest edition

*To be paid for under: Pavement Markings, Polyurea, Broken, Type L

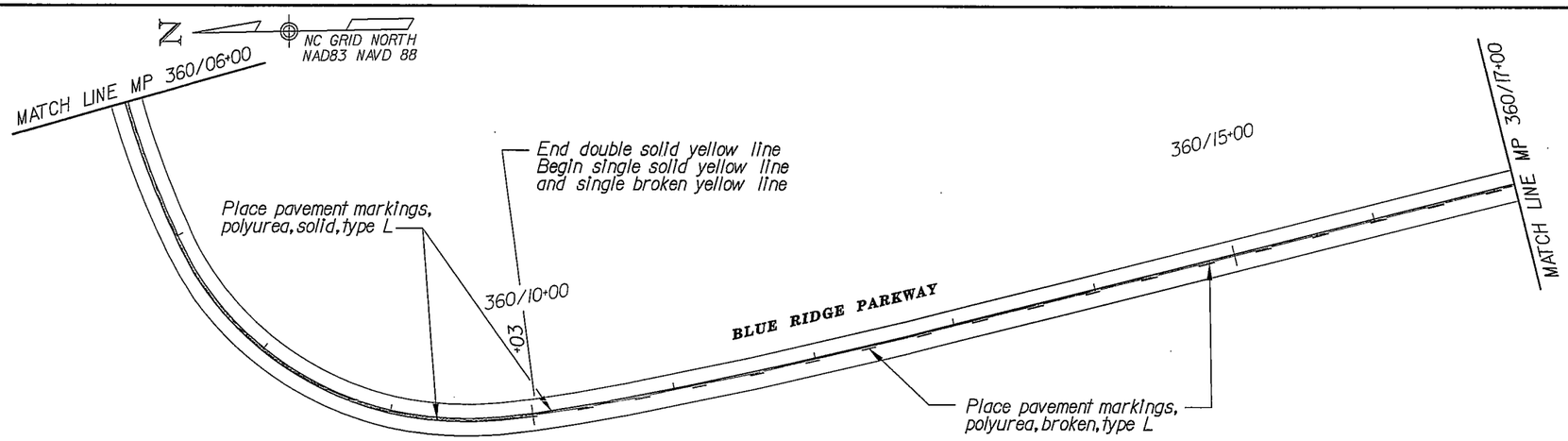

0 50 100
SCALE IN FEET

U.S. DEPARTMENT OF TRANSPORTATION
FEDERAL HIGHWAY ADMINISTRATION
EASTERN FEDERAL LANDS HIGHWAY DIVISION
STERLING, VIRGINIA

BLUE RIDGE PARKWAY
MP 359.7 TO MP 360.3
PERMANENT STRIPING PLAN

7/10/2008 12:14:49 PM G:\NroVCT052885\TRAVFINAL_MOD_7\PSS_blueridge_01.dgn

NPS NO.	REG	STATE	PROJECT	SHEET NO.	TOTAL SHEETS
601 / 43918	SE	NC	PRA-BLRI-2P14	84	166

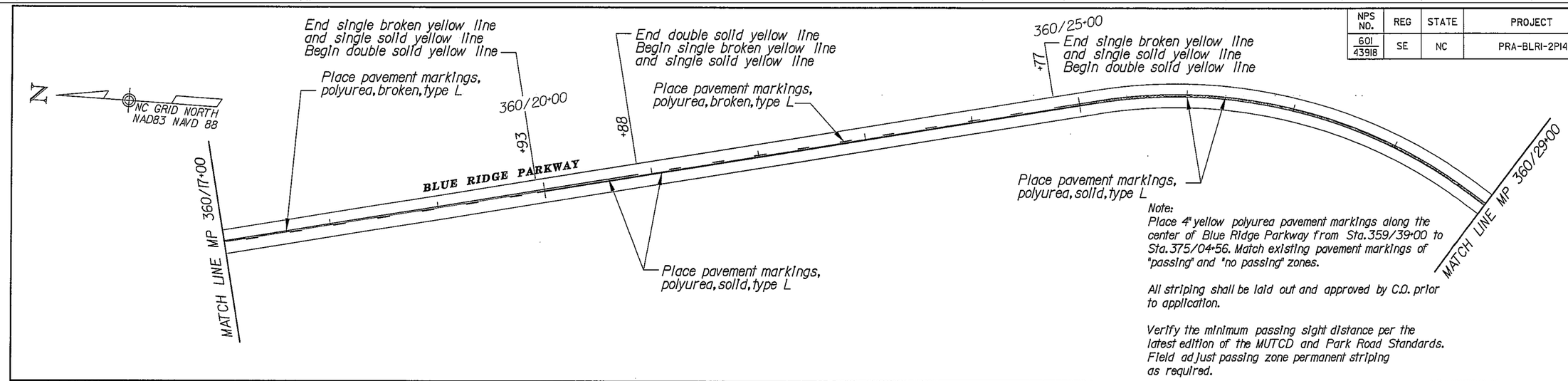

Note:
Place 4" yellow polyurea pavement markings along the center of Blue Ridge Parkway from Sta. 359/39+00 to Sta. 375/04+56. Match existing pavement markings of "passing" and "no passing" zones.

All striping shall be laid out and approved by C.O. prior to application.

Verify the minimum passing sight distance per the latest edition of the MUTCD and Park Road Standards. Field adjust passing zone permanent striping as required.

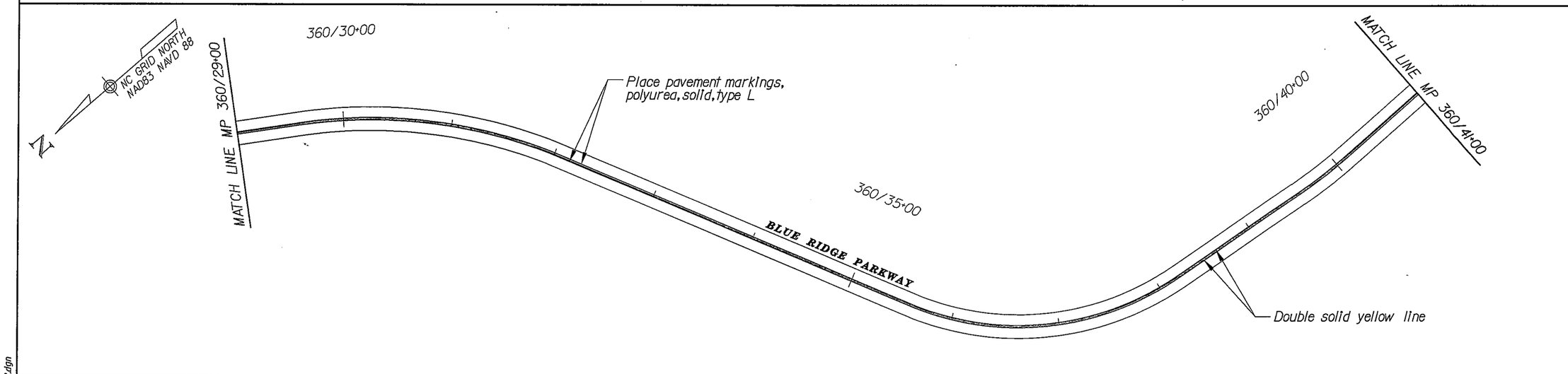

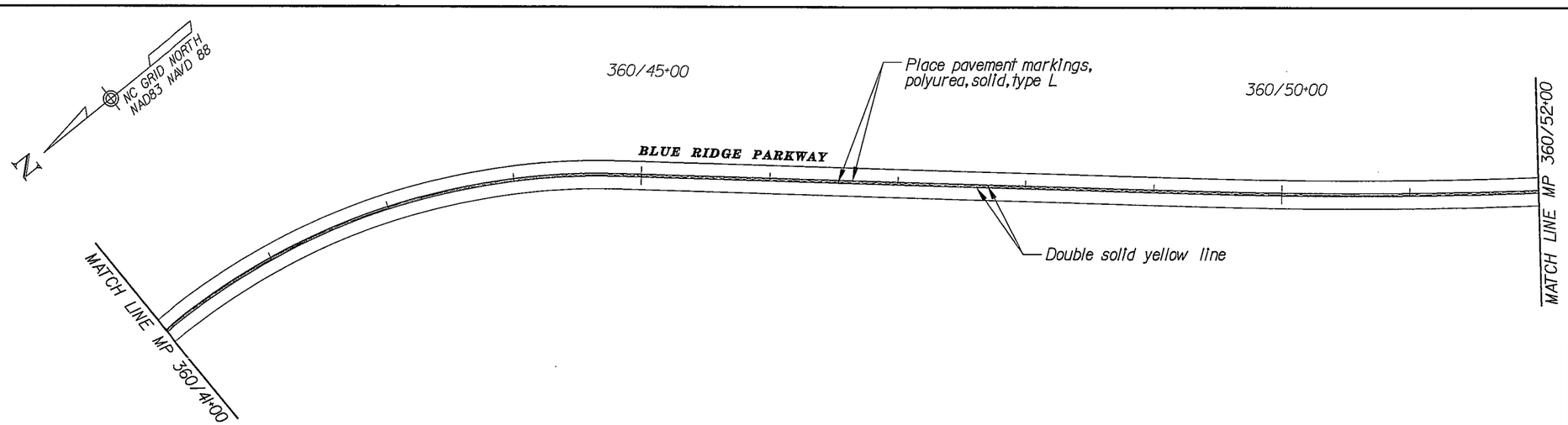

0 50 100
SCALE IN FEET

U.S. DEPARTMENT OF TRANSPORTATION
FEDERAL HIGHWAY ADMINISTRATION
EASTERN FEDERAL LANDS HIGHWAY DIVISION
STERLING, VIRGINIA

BLUE RIDGE PARKWAY
MP 360.3 TO MP 360.9
PERMANENT STRIPING PLAN

7/10/2008 12:14:58 PM G:\Tro\CT052885\TRAVFINAL_MOD_7\PSS_blueridge_02.dgn

NPS NO.	REG	STATE	PROJECT	SHEET NO.	TOTAL SHEETS
601 43918	SE	NC	PRA-BLRI-2P14	85	166

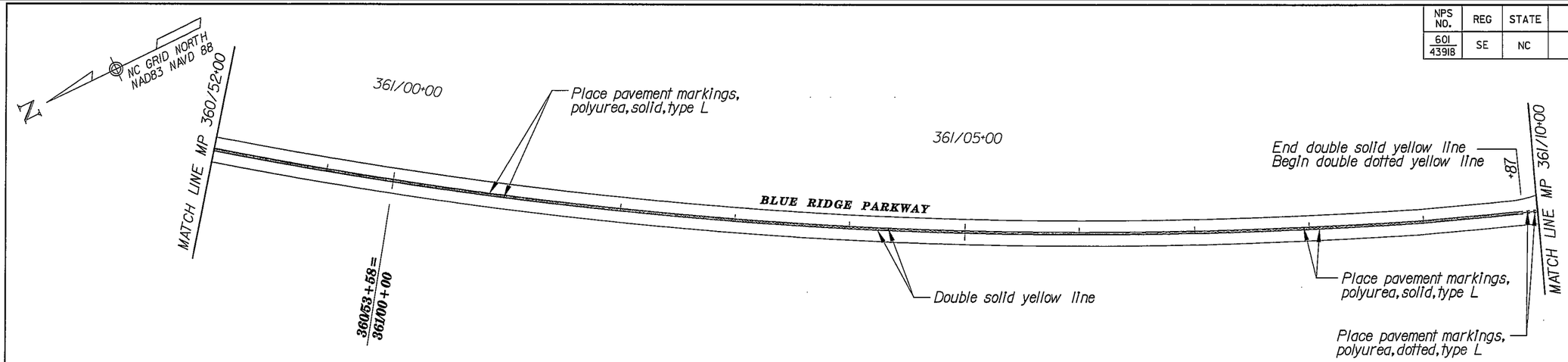

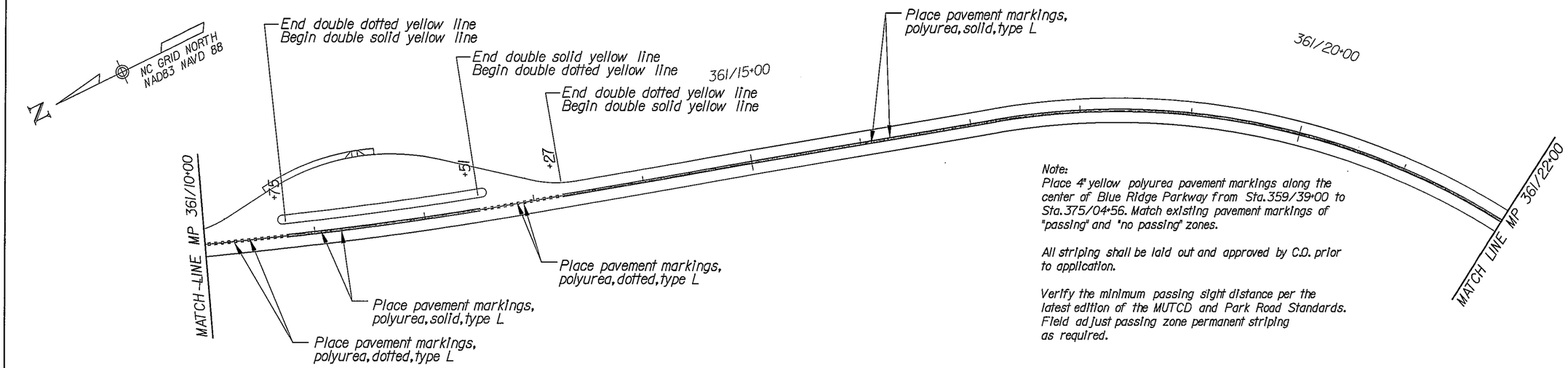

Note:
Place 4" yellow polyurea pavement markings along the center of Blue Ridge Parkway from Sta. 359/39+00 to Sta. 375/04+56. Match existing pavement markings of "passing" and "no passing" zones.

All striping shall be laid out and approved by C.O. prior to application.

Verify the minimum passing sight distance per the latest edition of the MUTCD and Park Road Standards. Field adjust passing zone permanent striping as required.

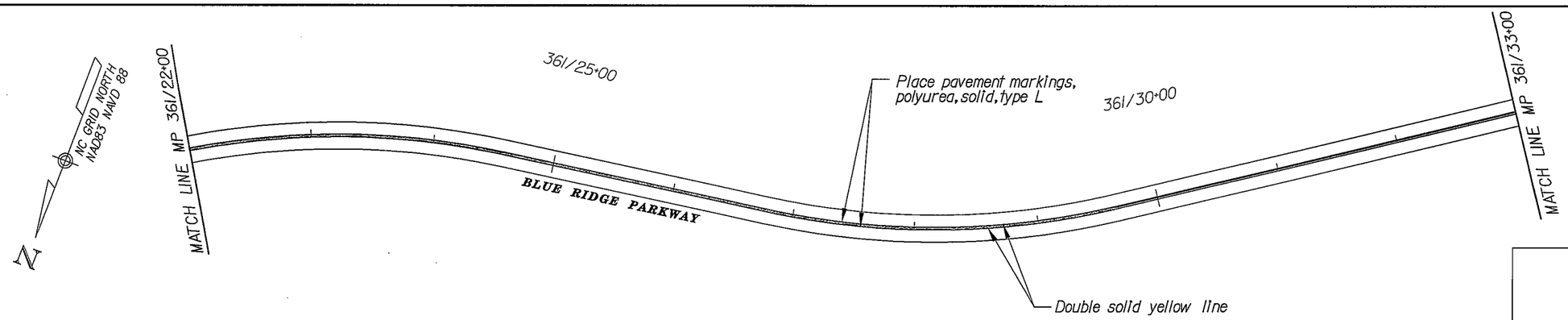

0 50 100
SCALE IN FEET

U.S. DEPARTMENT OF TRANSPORTATION
FEDERAL HIGHWAY ADMINISTRATION
EASTERN FEDERAL LANDS HIGHWAY DIVISION
STERLING, VIRGINIA

BLUE RIDGE PARKWAY
MP 360.9 TO MP 361.6
PERMANENT STRIPING PLAN

7/10/2008 12:15:07 PM G:\tra\CT052885\TRAFFINAL_MOD_TVFSS_blueridge_03.dgn

NPS NO.	REG	STATE	PROJECT	SHEET NO.	TOTAL SHEETS
601 / 43918	SE	NC	PRA-BLRI-2P14	86	166

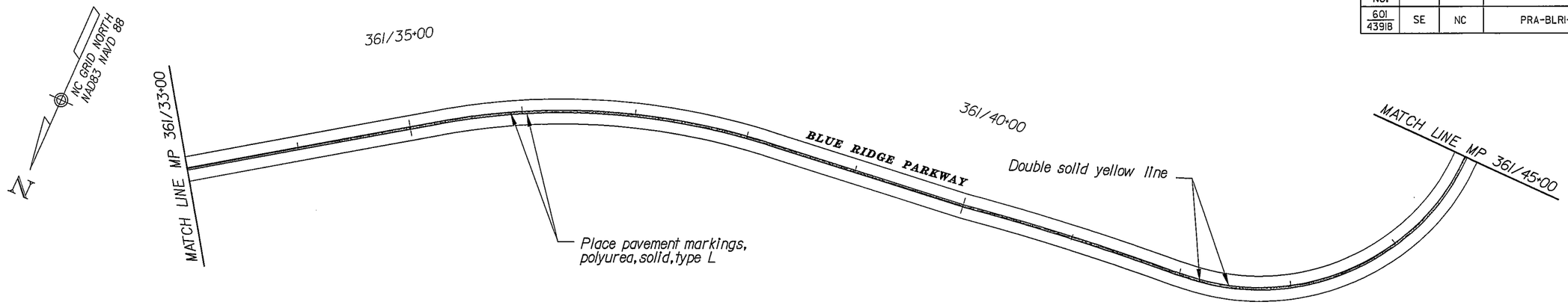

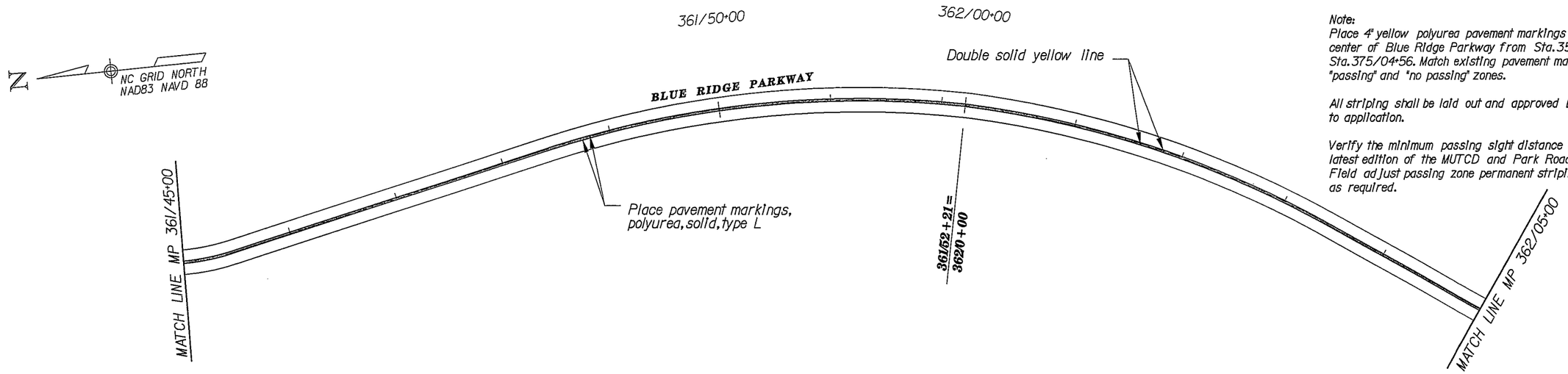

Note:
Place 4" yellow polyurea pavement markings along the center of Blue Ridge Parkway from Sta. 359/39+00 to Sta. 375/04+56. Match existing pavement markings of "passing" and "no passing" zones.

All striping shall be laid out and approved by C.O. prior to application.

Verify the minimum passing sight distance per the latest edition of the MUTCD and Park Road Standards. Field adjust passing zone permanent striping as required.

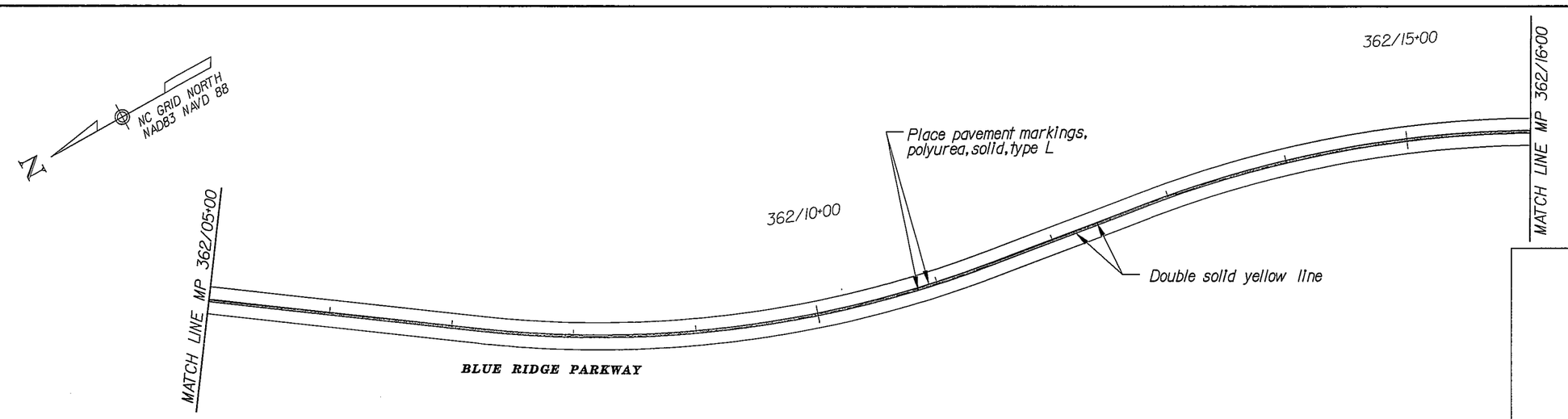

0 50 100
SCALE IN FEET

U.S. DEPARTMENT OF TRANSPORTATION
FEDERAL HIGHWAY ADMINISTRATION
EASTERN FEDERAL LANDS HIGHWAY DIVISION
STERLING, VIRGINIA

BLUE RIDGE PARKWAY
MP 361.6 TO MP 362.3
PERMANENT STRIPING PLAN

7/10/2008 12:15:18 PM G:\tra\CT052885\TRAFFINAL_MOD_7\PSS_blueridge_04.dgn

NPS NO.	REG	STATE	PROJECT	SHEET NO.	TOTAL SHEETS
601 43918	SE	NC	PRA-BLRI-2P14	87	166

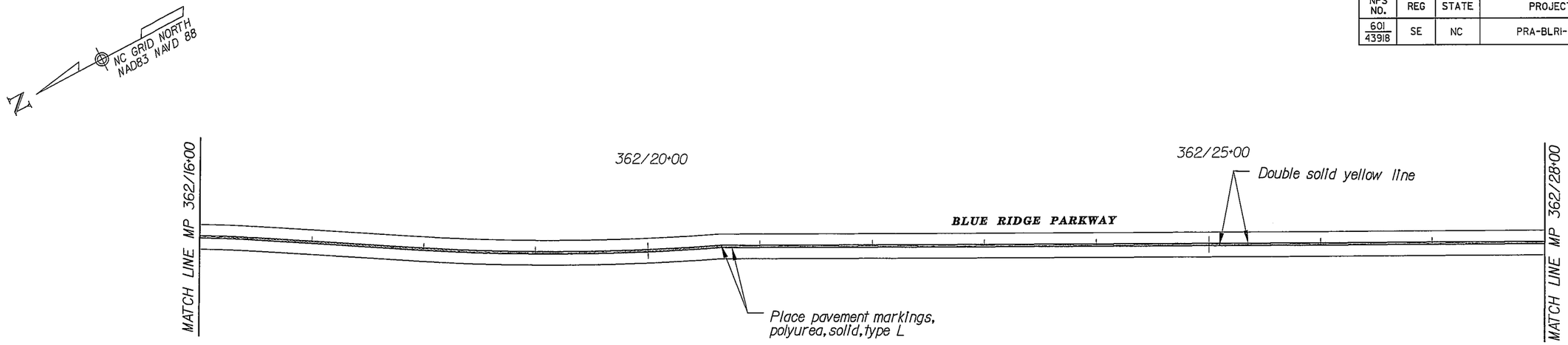

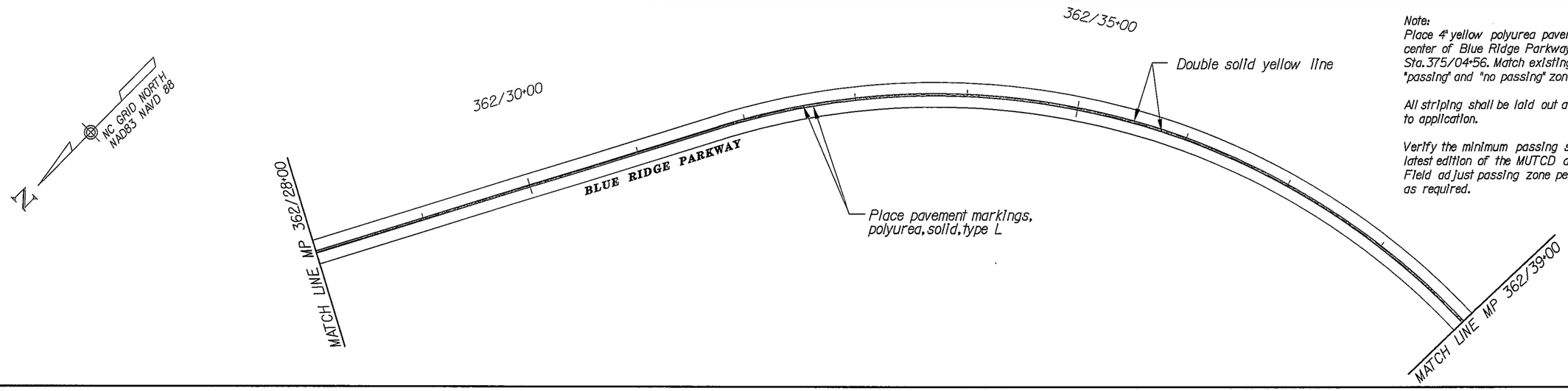

Note:
Place 4" yellow polyurea pavement markings along the center of Blue Ridge Parkway from Sta.359/39+00 to Sta.375/04+56. Match existing pavement markings of "passing" and "no passing" zones.

All striping shall be laid out and approved by C.O. prior to application.

Verify the minimum passing sight distance per the latest edition of the MUTCD and Park Road Standards. Field adjust passing zone permanent striping as required.

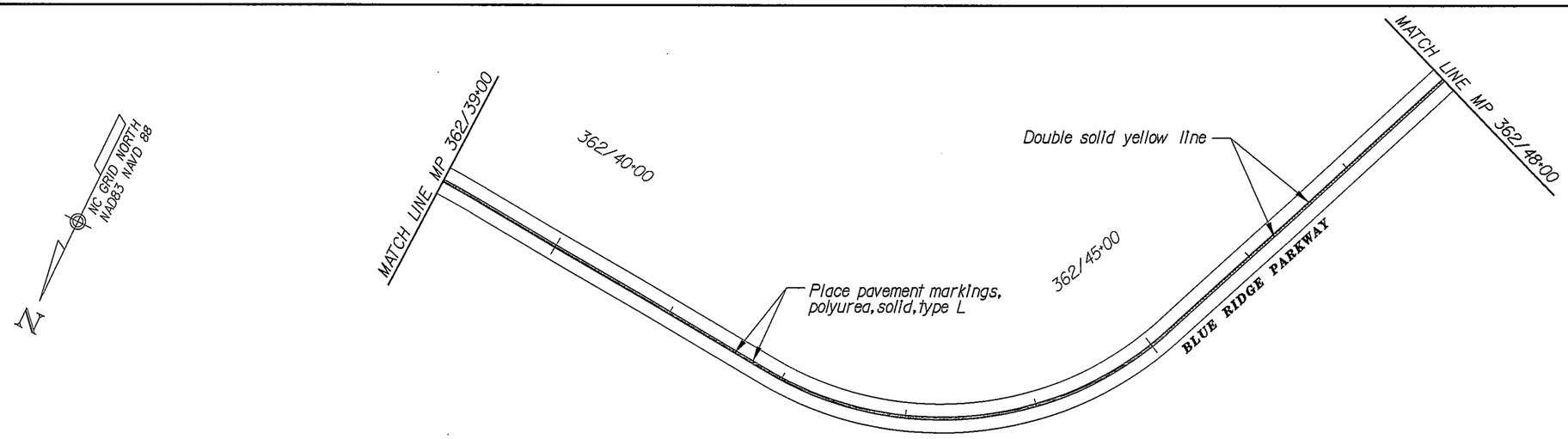

0 50 100
SCALE IN FEET

U.S. DEPARTMENT OF TRANSPORTATION
FEDERAL HIGHWAY ADMINISTRATION
EASTERN FEDERAL LANDS HIGHWAY DIVISION
STERLING, VIRGINIA

BLUE RIDGE PARKWAY
MP 362.3 TO MP 362.9
PERMANENT STRIPING PLAN

7/10/2008 12:15:26 PM G:\trn\CT052885\TRAFFINAL_MOD_TVPSS_blueridge_05.dgn

NPS NO.	REG	STATE	PROJECT	SHEET NO.	TOTAL SHEETS
601 / 43918	SE	NC	PRA-BLRI-2P14	88	166

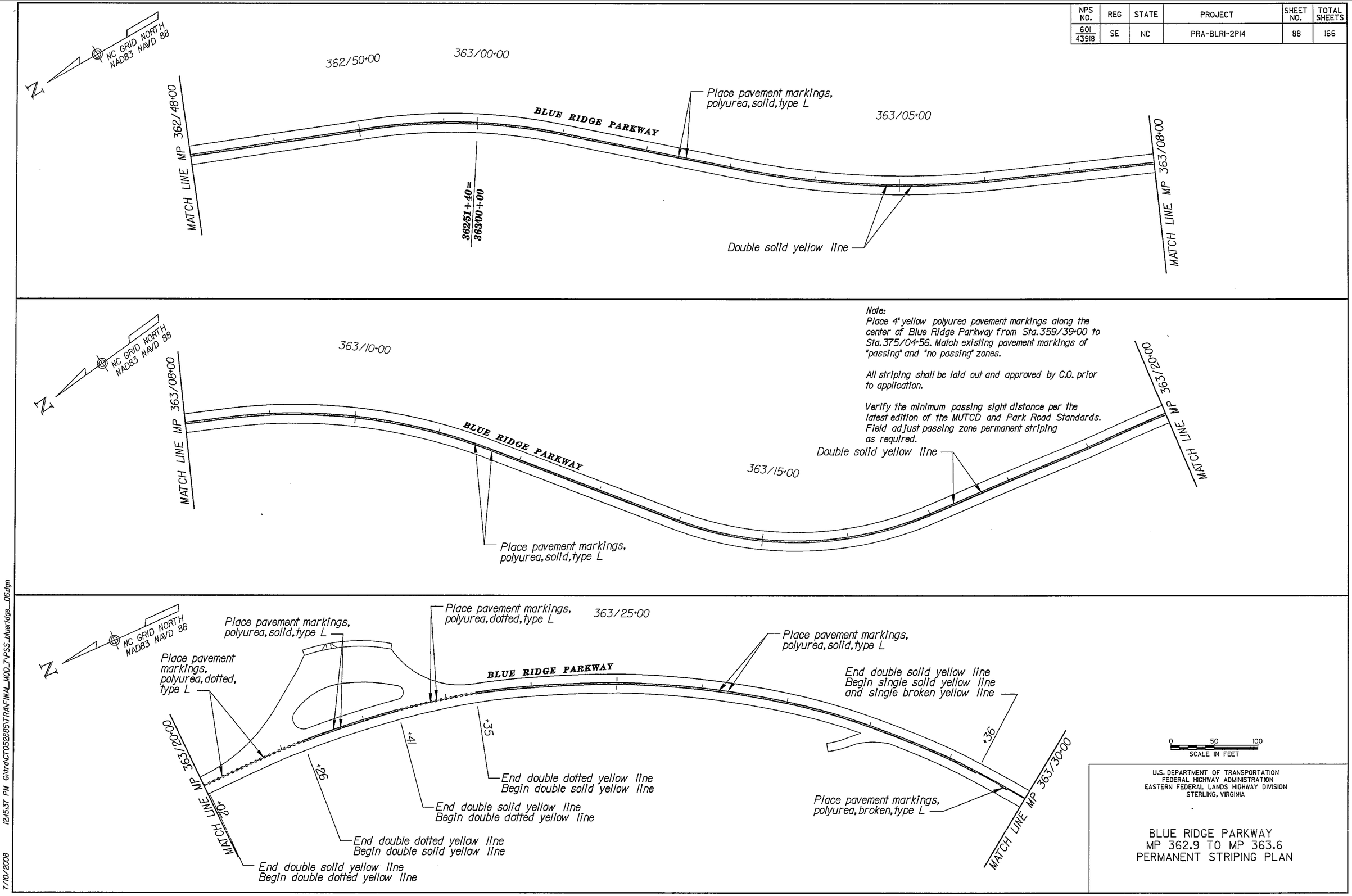

Note:
Place 4" yellow polyurea pavement markings along the center of Blue Ridge Parkway from Sta. 359/39+00 to Sta. 375/04+56. Match existing pavement markings of "passing" and "no passing" zones.

All striping shall be laid out and approved by C.O. prior to application.

Verify the minimum passing sight distance per the latest edition of the MUTCD and Park Road Standards. Field adjust passing zone permanent striping as required.

U.S. DEPARTMENT OF TRANSPORTATION
FEDERAL HIGHWAY ADMINISTRATION
EASTERN FEDERAL LANDS HIGHWAY DIVISION
STERLING, VIRGINIA

BLUE RIDGE PARKWAY
MP 362.9 TO MP 363.6
PERMANENT STRIPING PLAN

7/10/2008 12:15:37 PM G:\tra\CT052885\TRA\FINAL_MOD_7\PSS_blueridge_06.dgn

NPS NO.	REG	STATE	PROJECT	SHEET NO.	TOTAL SHEETS
601 / 43918	SE	NC	PRA-BLRI-2P14	89	166

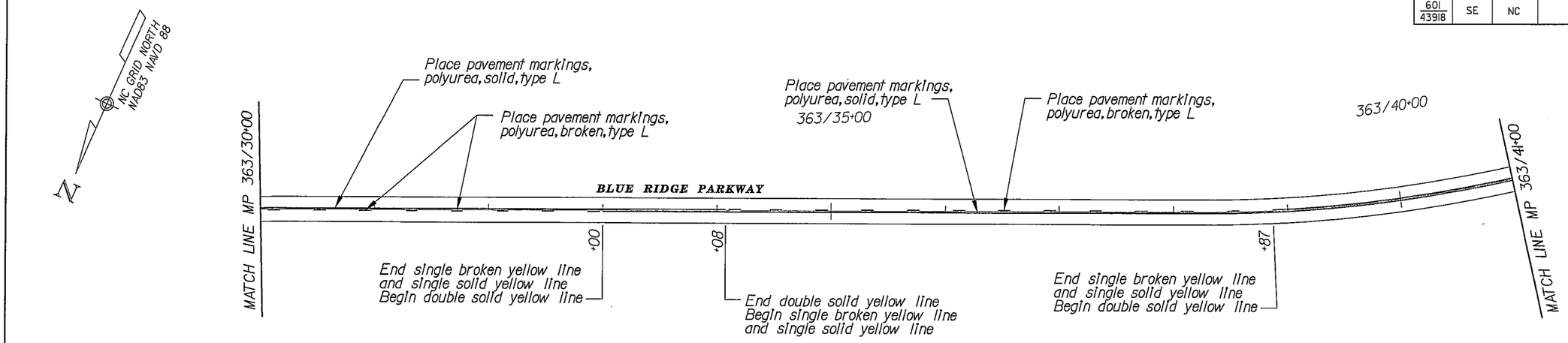

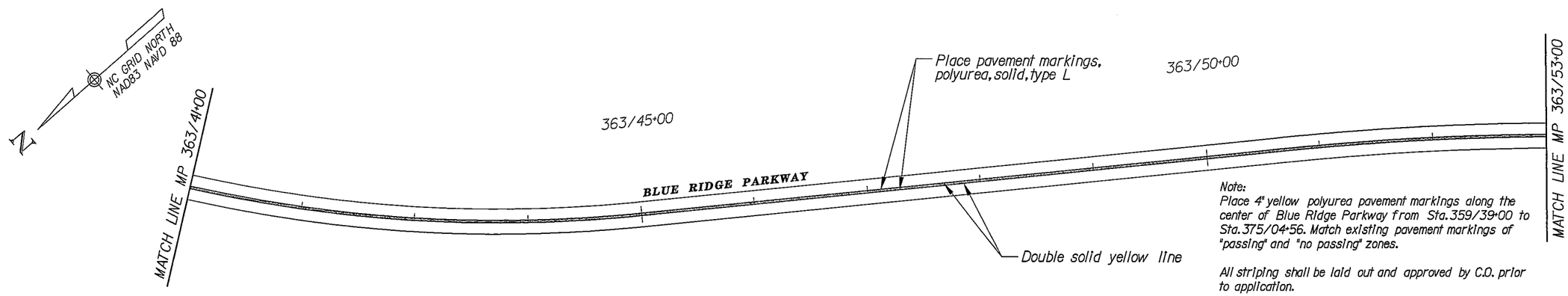

Note:
Place 4" yellow polyurea pavement markings along the center of Blue Ridge Parkway from Sta. 359/39+00 to Sta. 375/04+56. Match existing pavement markings of "passing" and "no passing" zones.

All striping shall be laid out and approved by C.O. prior to application.

Verify the minimum passing sight distance per the latest edition of the MUTCD and Park Road Standards. Field adjust passing zone permanent striping as required.

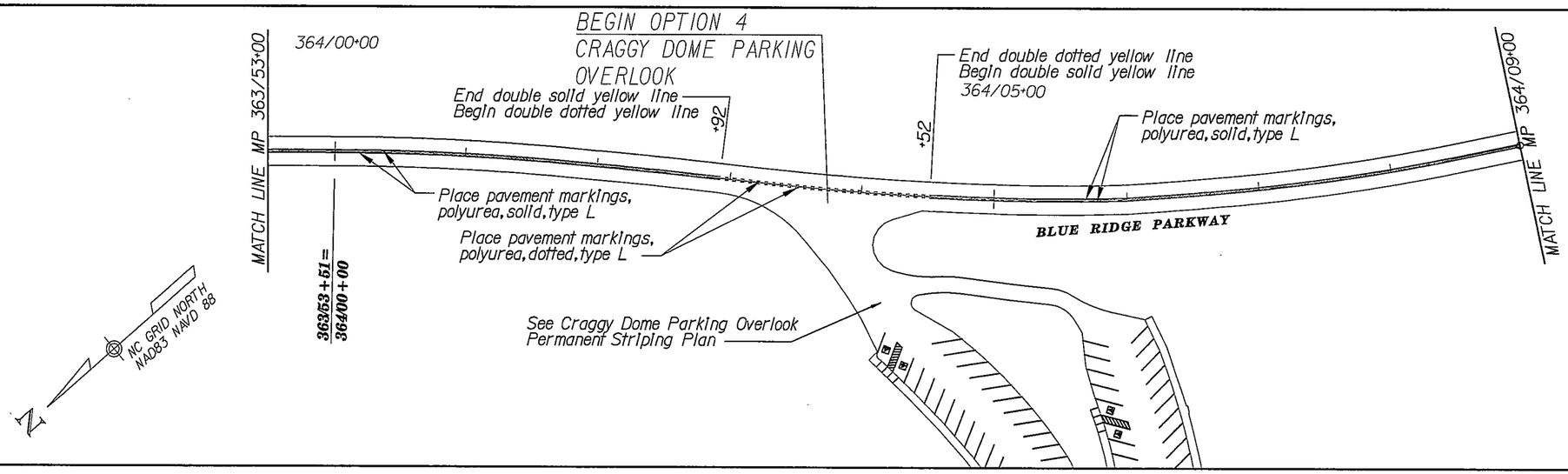

0 50 100
SCALE IN FEET

U.S. DEPARTMENT OF TRANSPORTATION
FEDERAL HIGHWAY ADMINISTRATION
EASTERN FEDERAL LANDS HIGHWAY DIVISION
STERLING, VIRGINIA

BLUE RIDGE PARKWAY
MP 363.6 TO MP 364.2
PERMANENT STRIPING PLAN

7/10/2008 12:15:48 PM G:\traCT052885\TRAVFINAL_MOD_7\PSS_blueridge_07.dgn

NPS NO.	REG	STATE	PROJECT	SHEET NO.	TOTAL SHEETS
601 / 43918	SE	NC	PRA-BLRI-2P14	90	166

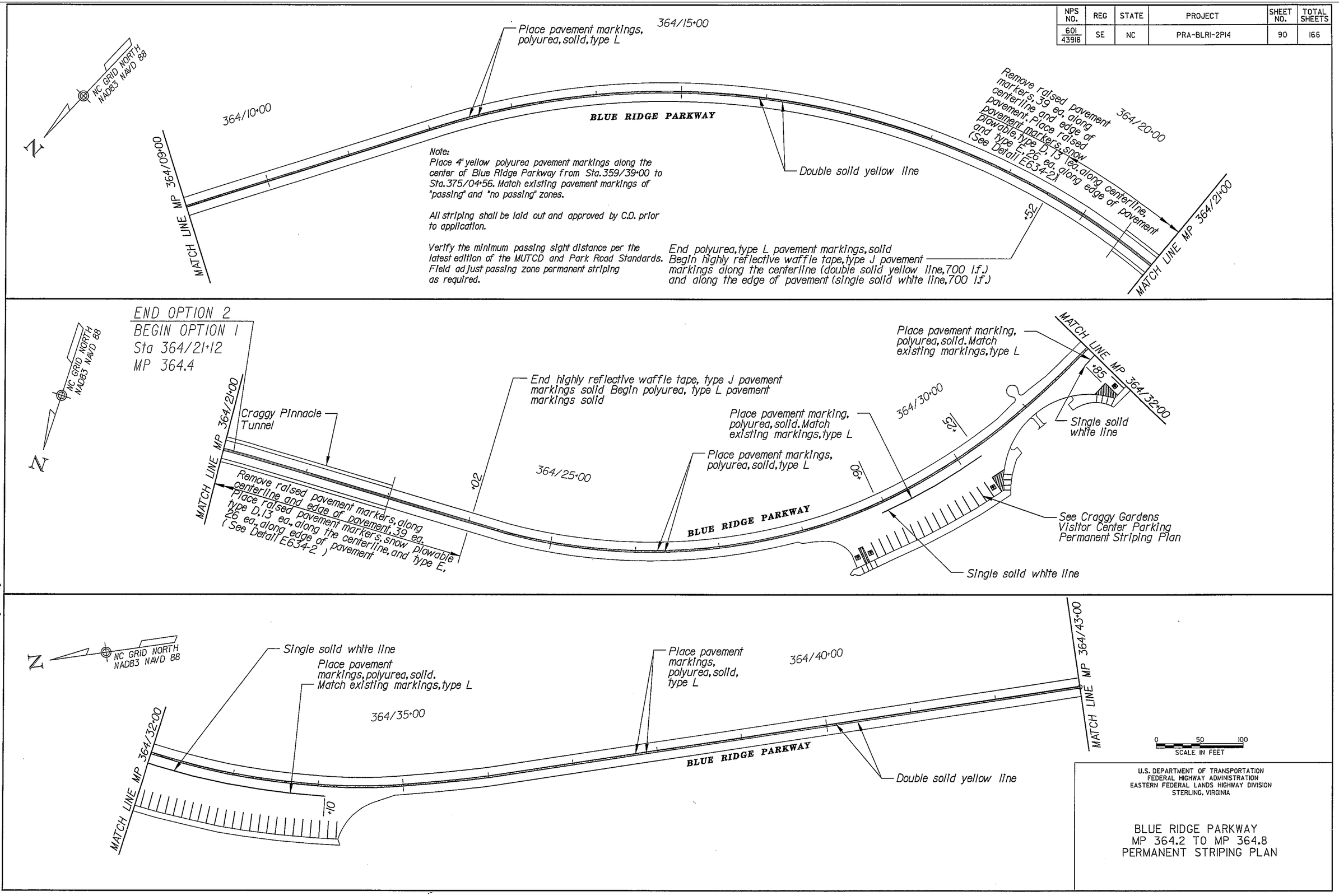

U.S. DEPARTMENT OF TRANSPORTATION
FEDERAL HIGHWAY ADMINISTRATION
EASTERN FEDERAL LANDS HIGHWAY DIVISION
STERLING, VIRGINIA

BLUE RIDGE PARKWAY
MP 364.2 TO MP 364.8
PERMANENT STRIPING PLAN

7/10/2008 12:16:00 PM G:\tra\CT052885\TRA\FINAL_MOD_7\PSS_blueridge_08.dgn

NPS NO.	REG	STATE	PROJECT	SHEET NO.	TOTAL SHEETS
601 / 43918	SE	NC	PRA-BLRI-2P14	91	166

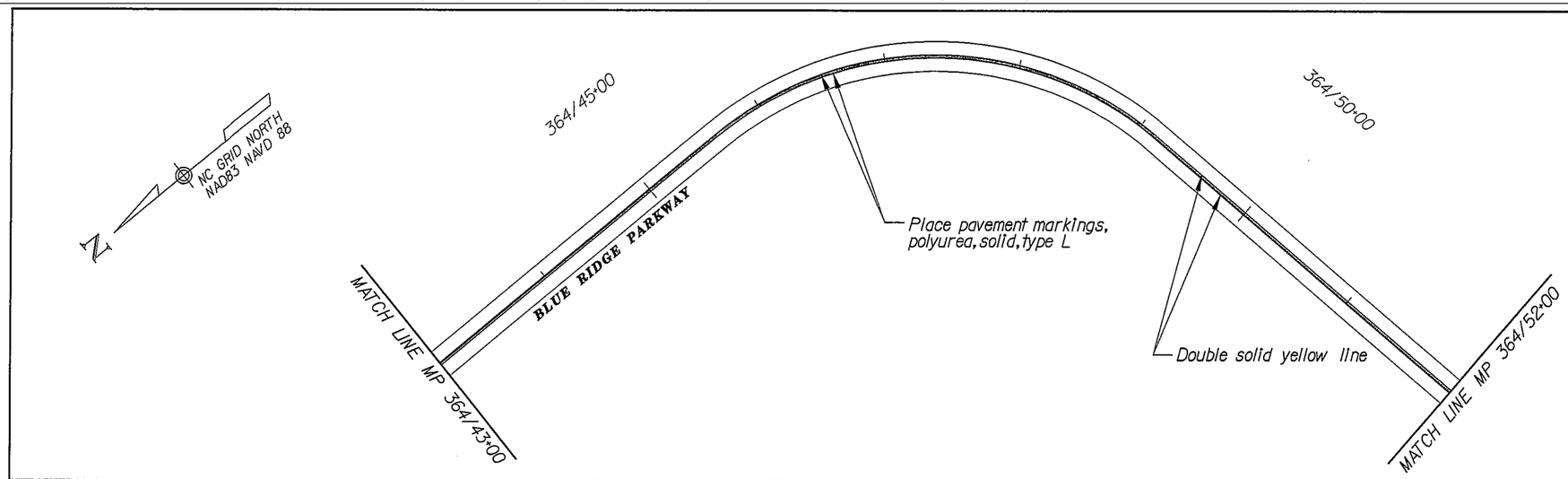

Note:
Place 4" yellow polyurea pavement markings along the center of Blue Ridge Parkway from Sta. 359/39+00 to Sta. 375/04+56. Match existing pavement markings of "passing" and "no passing" zones.

All striping shall be laid out and approved by C.O. prior to application.

Verify the minimum passing sight distance per the latest edition of the MUTCD and Park Road Standards. Field adjust passing zone permanent striping as required.

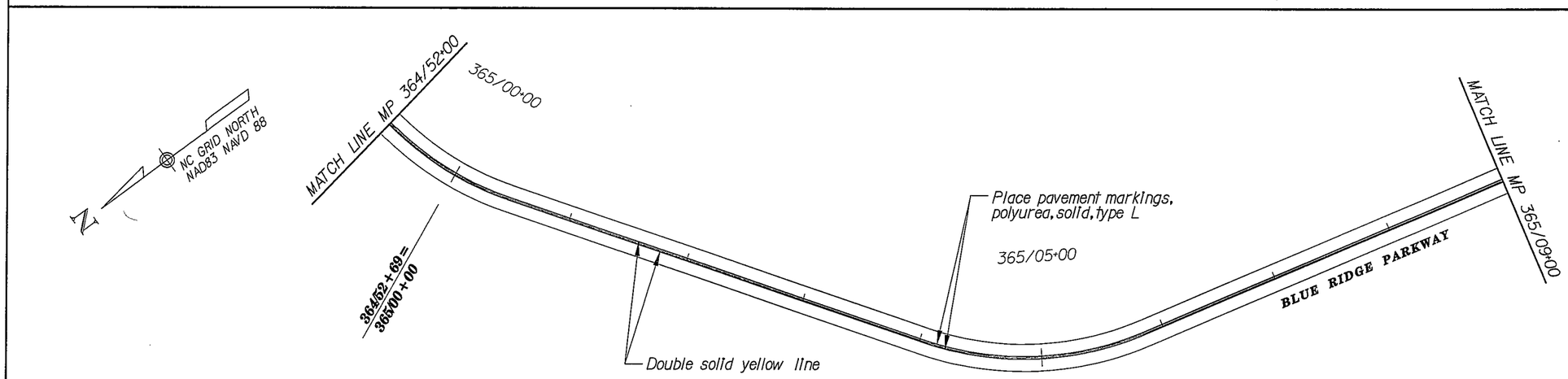

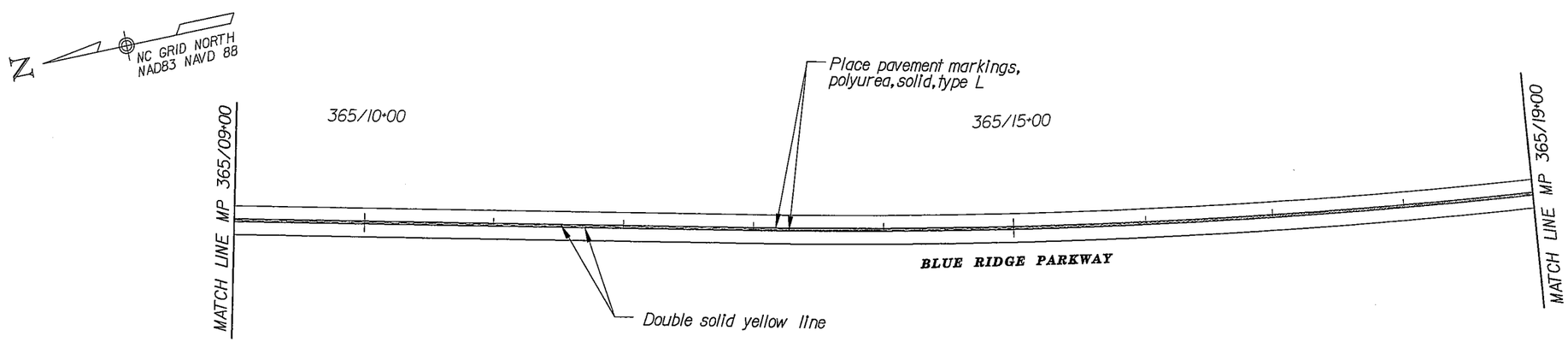

0 50 100
SCALE IN FEET

U.S. DEPARTMENT OF TRANSPORTATION
FEDERAL HIGHWAY ADMINISTRATION
EASTERN FEDERAL LANDS HIGHWAY DIVISION
STERLING, VIRGINIA

BLUE RIDGE PARKWAY
MP 364.8 TO MP 365.4
PERMANENT STRIPING PLAN

7/10/2008 12:16:10 PM G:\Pro\CT052885\TRAV\FINAL_MOD_7\PSS_blueridge_09.dgn

NPS NO.	REG	STATE	PROJECT	SHEET NO.	TOTAL SHEETS
601 / 43918	SE	NC	PRA-BLRI-2P14	92	166

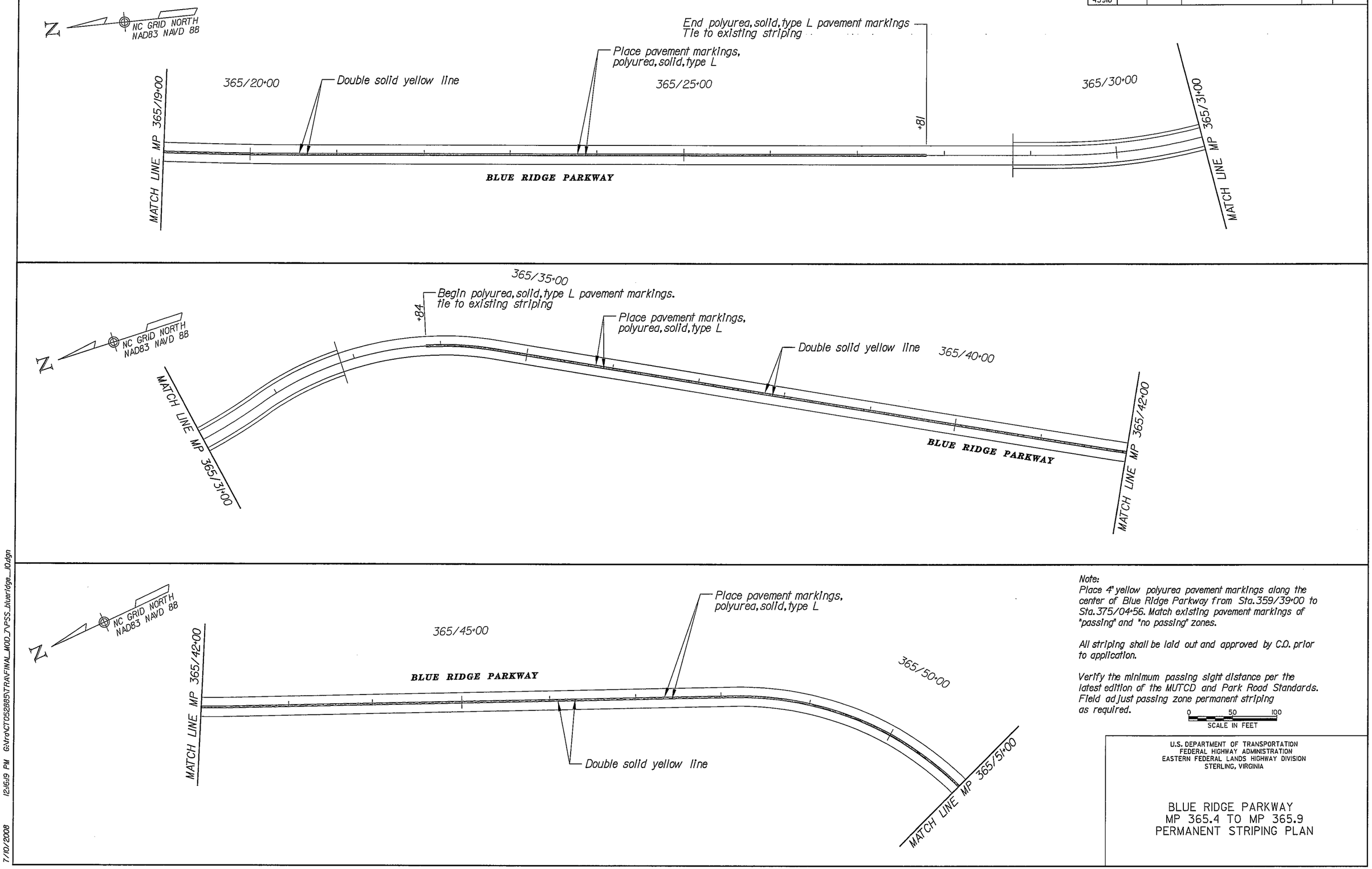

Note:
Place 4" yellow polyurea pavement markings along the center of Blue Ridge Parkway from Sta. 359/39+00 to Sta. 375/04+56. Match existing pavement markings of "passing" and "no passing" zones.

All striping shall be laid out and approved by C.O. prior to application.

Verify the minimum passing sight distance per the latest edition of the MUTCD and Park Road Standards. Field adjust passing zone permanent striping as required.

0 50 100
SCALE IN FEET

U.S. DEPARTMENT OF TRANSPORTATION
FEDERAL HIGHWAY ADMINISTRATION
EASTERN FEDERAL LANDS HIGHWAY DIVISION
STERLING, VIRGINIA

BLUE RIDGE PARKWAY
MP 365.4 TO MP 365.9
PERMANENT STRIPING PLAN

7/10/2008 12:16:19 PM G:\Vra\CT052885\TRA\FINAL_MOD_7\PSS_blueridge_10.dgn

NPS NO.	REG	STATE	PROJECT	SHEET NO.	TOTAL SHEETS
601 / 43918	SE	NC	PRA-BLRI-2P14	93	166

Note:
Place 4" yellow polyurea pavement markings along the center of Blue Ridge Parkway from Sta.359/39+00 to Sta.375/04+56. Match existing pavement markings of "passing" and "no passing" zones.

All striping shall be laid out and approved by C.O. prior to application.

Verify the minimum passing sight distance per the latest edition of the MUTCD and Park Road Standards. Field adjust passing zone permanent striping as required.

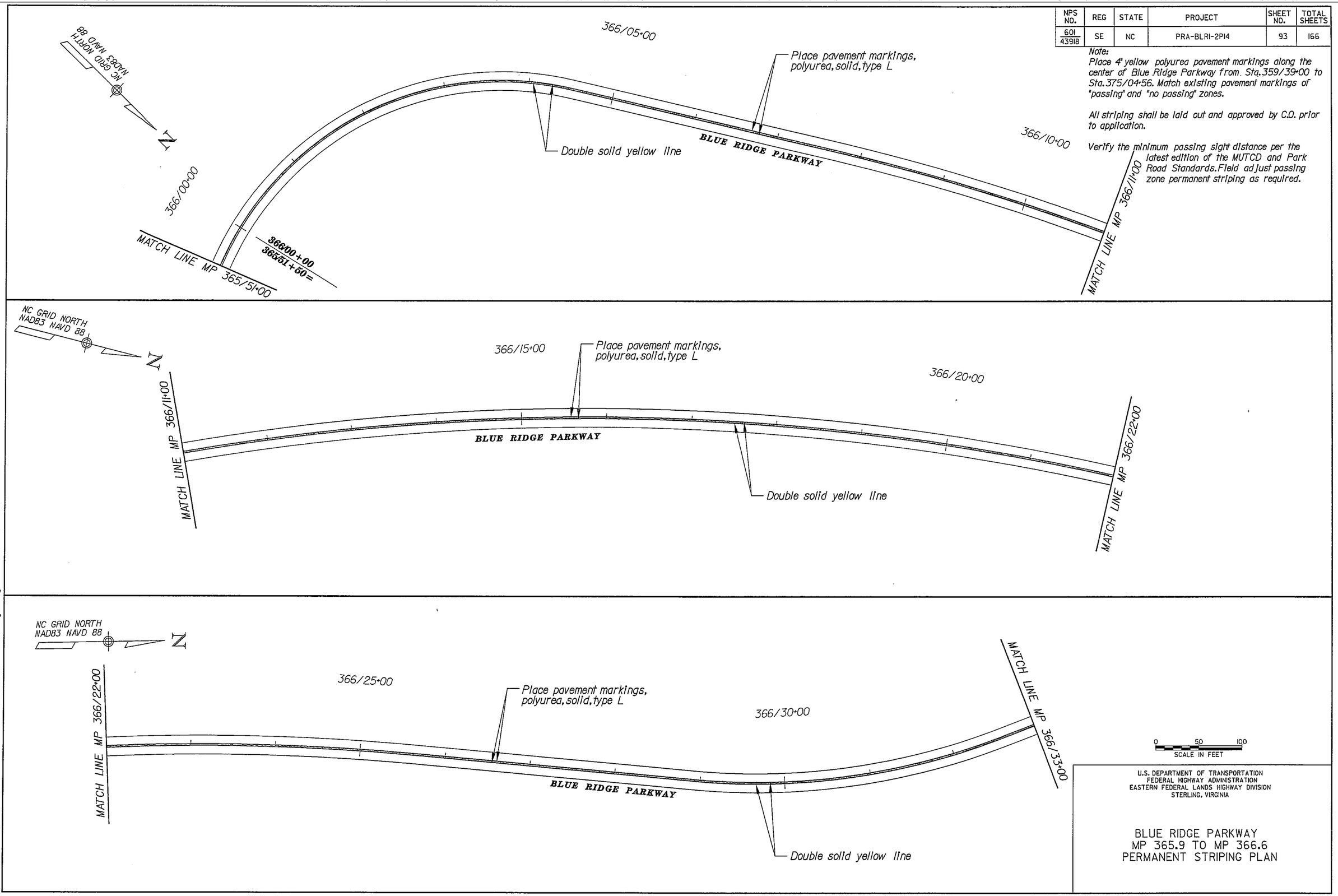

U.S. DEPARTMENT OF TRANSPORTATION
FEDERAL HIGHWAY ADMINISTRATION
EASTERN FEDERAL LANDS HIGHWAY DIVISION
STERLING, VIRGINIA

BLUE RIDGE PARKWAY
MP 365.9 TO MP 366.6
PERMANENT STRIPING PLAN

7/10/2008 12:16:29 PM G:\tra\CT052885\TRA\FINAL_MOD_7\PSS_blueridge_11.dgn

NPS NO.	REG	STATE	PROJECT	SHEET NO.	TOTAL SHEETS
601 / 43918	SE	NC	PRA-BLRI-2P14	94	166

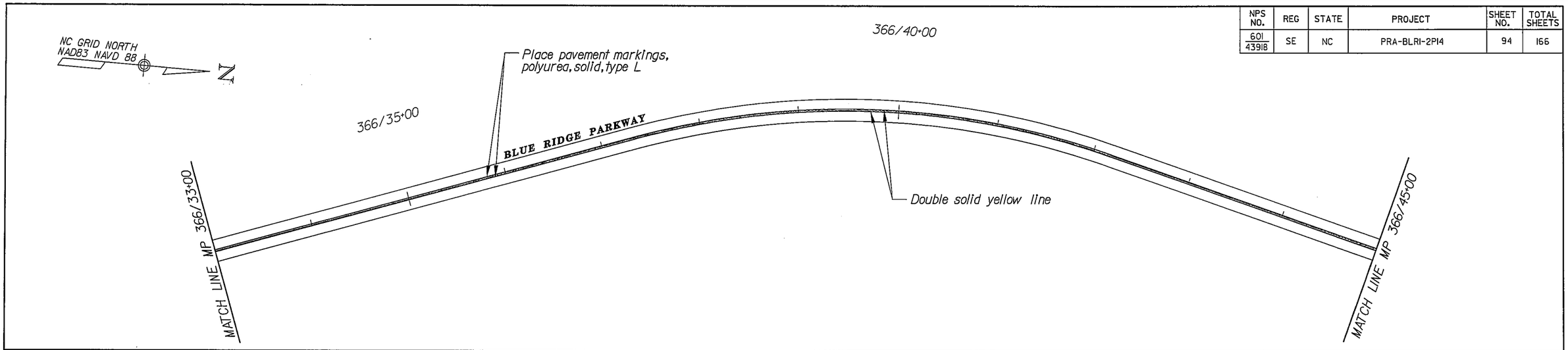

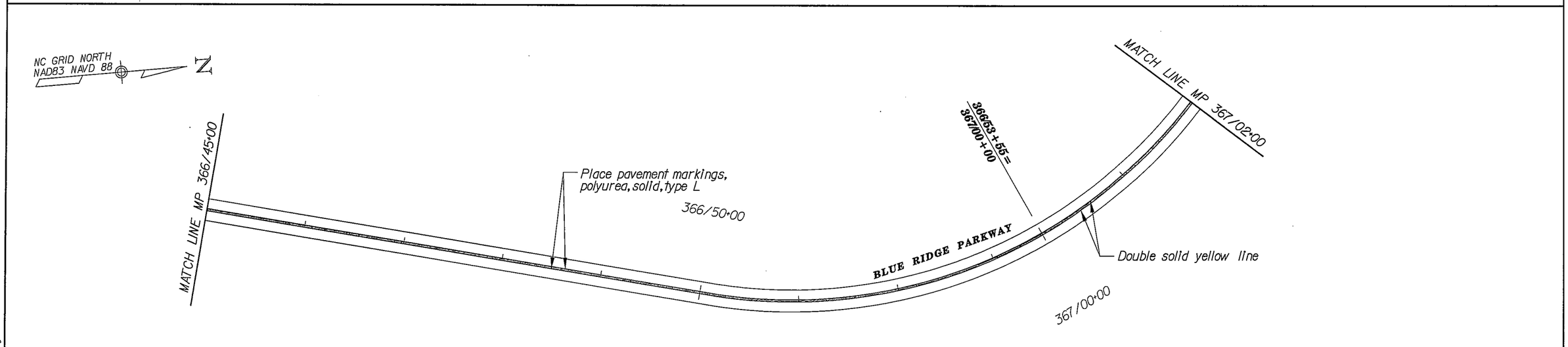

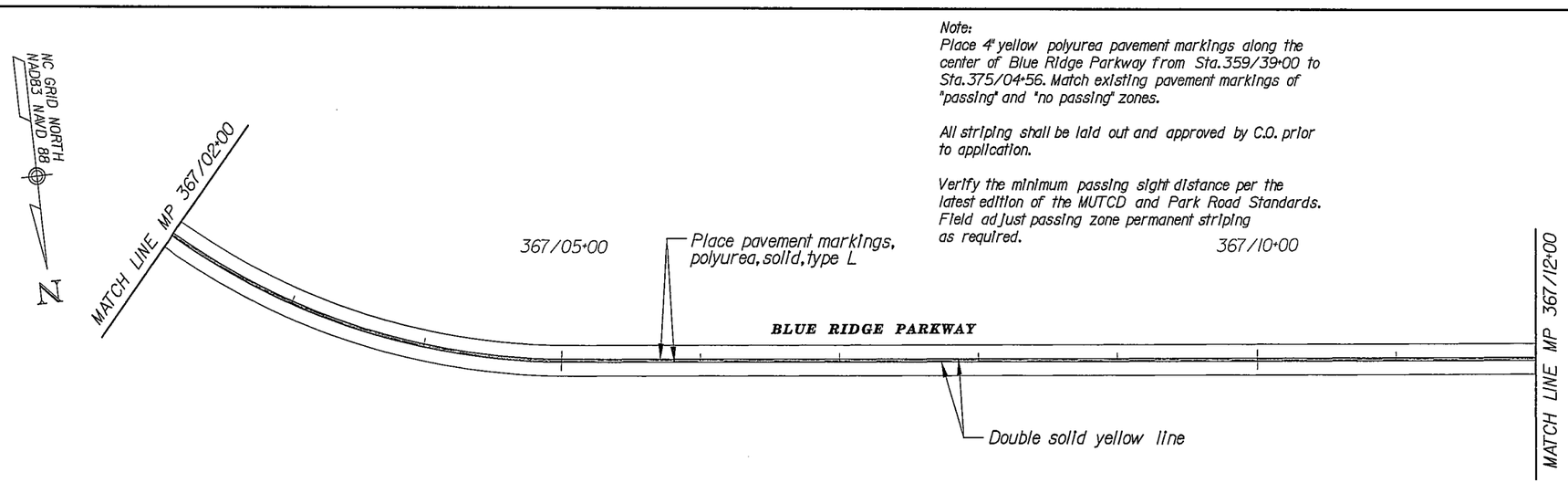

Note:
Place 4" yellow polyurea pavement markings along the center of Blue Ridge Parkway from Sta.359/39+00 to Sta.375/04+56. Match existing pavement markings of "passing" and "no passing" zones.

All striping shall be laid out and approved by C.O. prior to application.

Verify the minimum passing sight distance per the latest edition of the MUTCD and Park Road Standards. Field adjust passing zone permanent striping as required.

0 50 100
SCALE IN FEET

U.S. DEPARTMENT OF TRANSPORTATION
FEDERAL HIGHWAY ADMINISTRATION
EASTERN FEDERAL LANDS HIGHWAY DIVISION
STERLING, VIRGINIA

BLUE RIDGE PARKWAY
MP 366.6 TO MP 367.2
PERMANENT STRIPING PLAN

7/10/2008 12:16:38 PM G:\Tra\CT052885\TRA\FINAL_MOD_7\PSS_blueridge_12.dgn

NPS NO.	REG	STATE	PROJECT	SHEET NO.	TOTAL SHEETS
601 / 43918	SE	NC	PRA-BLRI-2P14	95	166

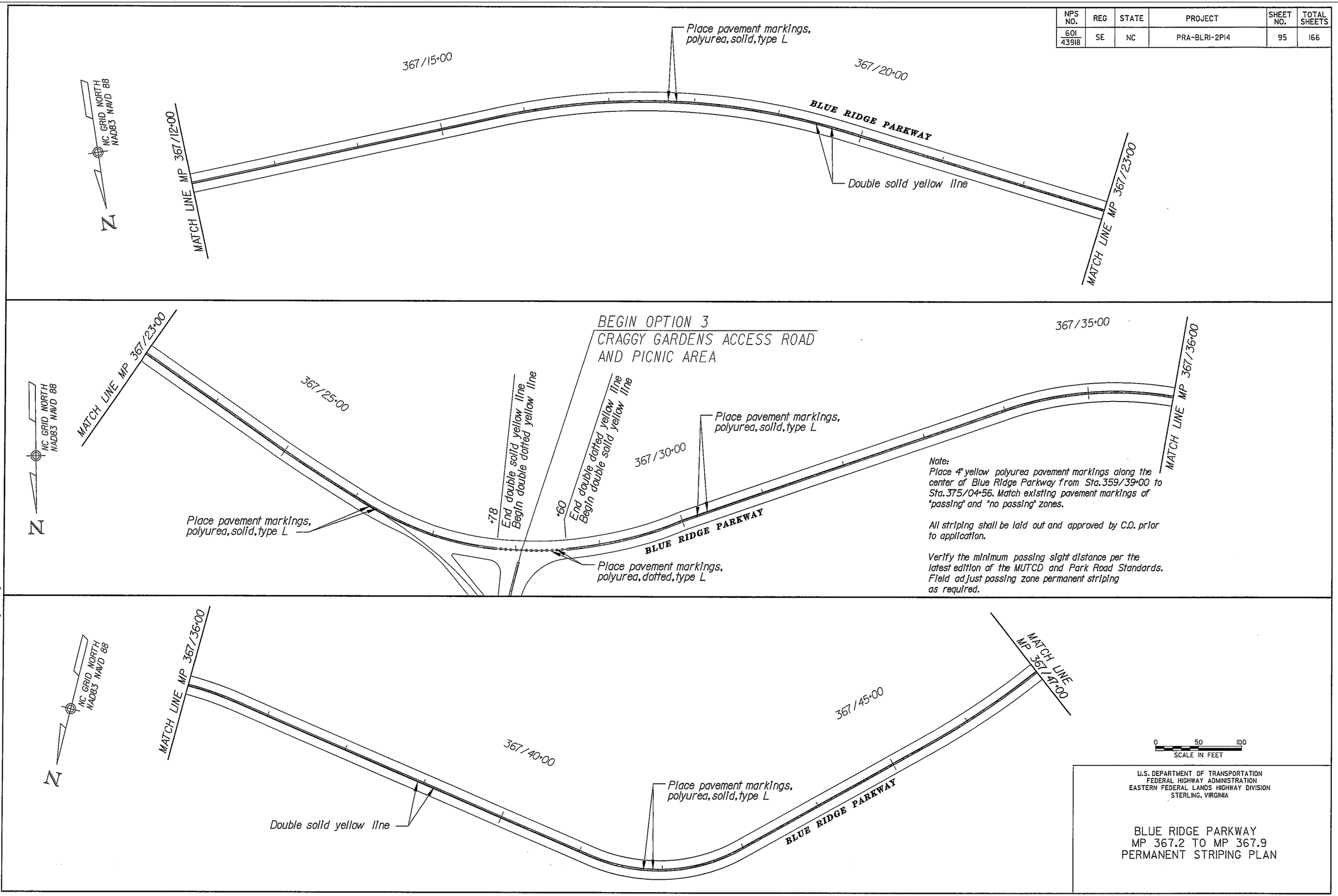

U.S. DEPARTMENT OF TRANSPORTATION
FEDERAL HIGHWAY ADMINISTRATION
EASTERN FEDERAL LANDS HIGHWAY DIVISION
STERLING, VIRGINIA

BLUE RIDGE PARKWAY
MP 367.2 TO MP 367.9
PERMANENT STRIPING PLAN

7/10/2008 12:16:48 PM G:\ro\CT052885\TRAF\WAL_MOD_7\PSS_blueridge_13.dgn

NPS NO.	REG	STATE	PROJECT	SHEET NO.	TOTAL SHEETS
601 / 43918	SE	NC	PRA-BLRI-2P14	96	166

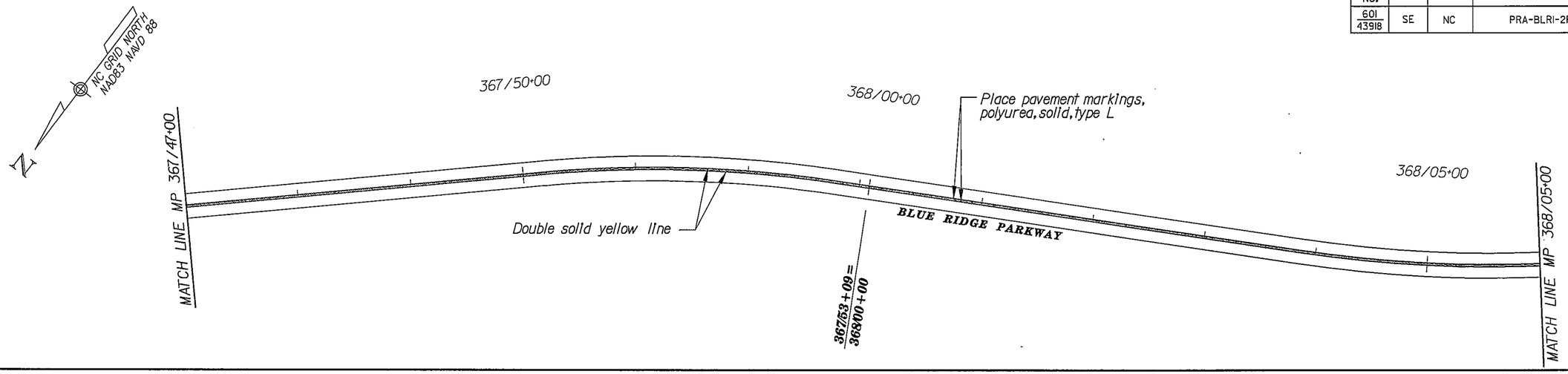

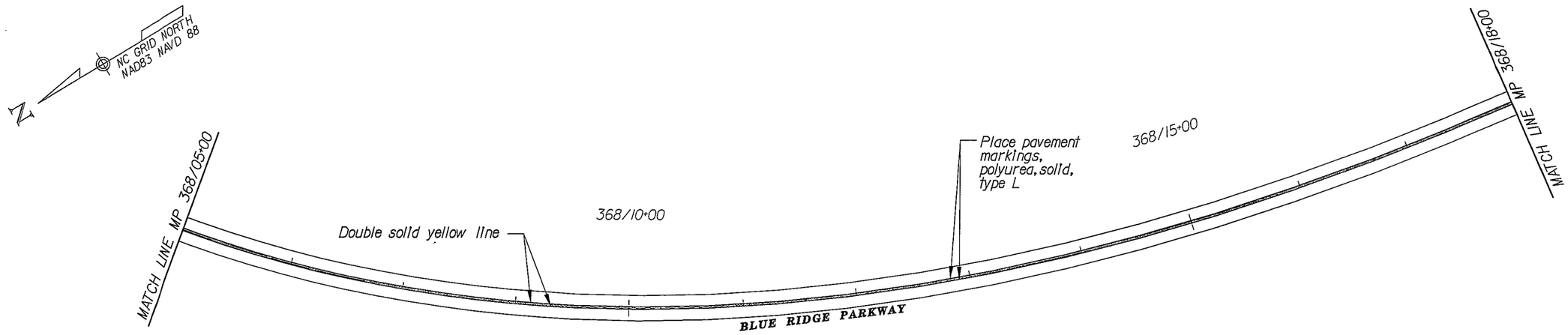

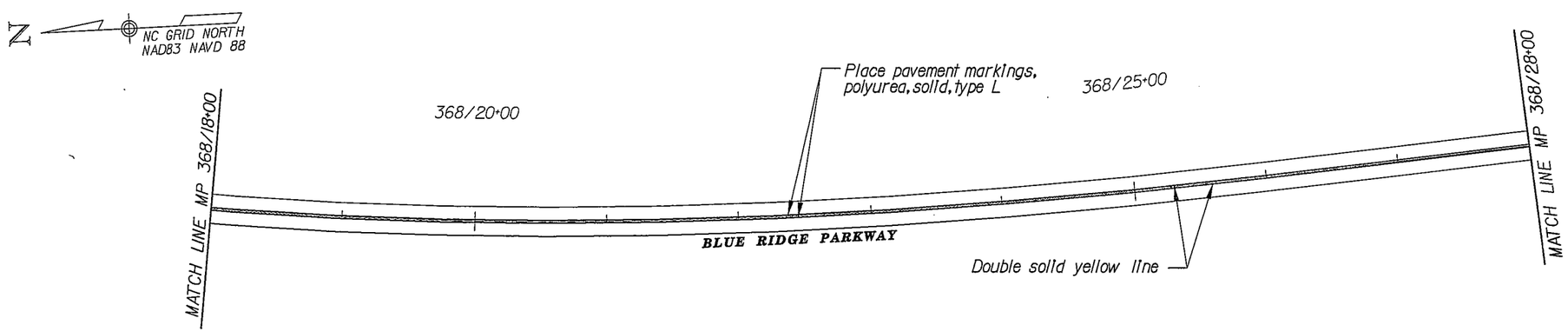

Note:
Place 4" yellow polyurea pavement markings along the center of Blue Ridge Parkway from Sta. 359/39+00 to Sta. 375/04+56. Match existing pavement markings of "passing" and "no passing" zones.

All striping shall be laid out and approved by C.O. prior to application.

Verify the minimum passing sight distance per the latest edition of the MUTCD and Park Road Standards. Field adjust passing zone permanent striping as required.

0 50 100
SCALE IN FEET

U.S. DEPARTMENT OF TRANSPORTATION
FEDERAL HIGHWAY ADMINISTRATION
EASTERN FEDERAL LANDS HIGHWAY DIVISION
STERLING, VIRGINIA

BLUE RIDGE PARKWAY
MP 367.9 TO MP 368.5
PERMANENT STRIPING PLAN

7/10/2008 12:46:59 PM G:\tra\CT052885\TRA\FINAL_MOD_7\PSS_blueridge_14.dgn

NPS NO.	REG	STATE	PROJECT	SHEET NO.	TOTAL SHEETS
601 43918	SE	NC	PRA-BLRI-2P14	97	166

Note:
Place 4" yellow polyurea pavement markings along the center of Blue Ridge Parkway from Sta. 359/39+00 to Sta. 375/04+56. Match existing pavement markings of "passing" and "no passing" zones.

All striping shall be laid out and approved by C.O. prior to application.

Verify the minimum passing sight distance per the latest edition of the MUTCD and Park Road Standards. Field adjust passing zone permanent striping as required.

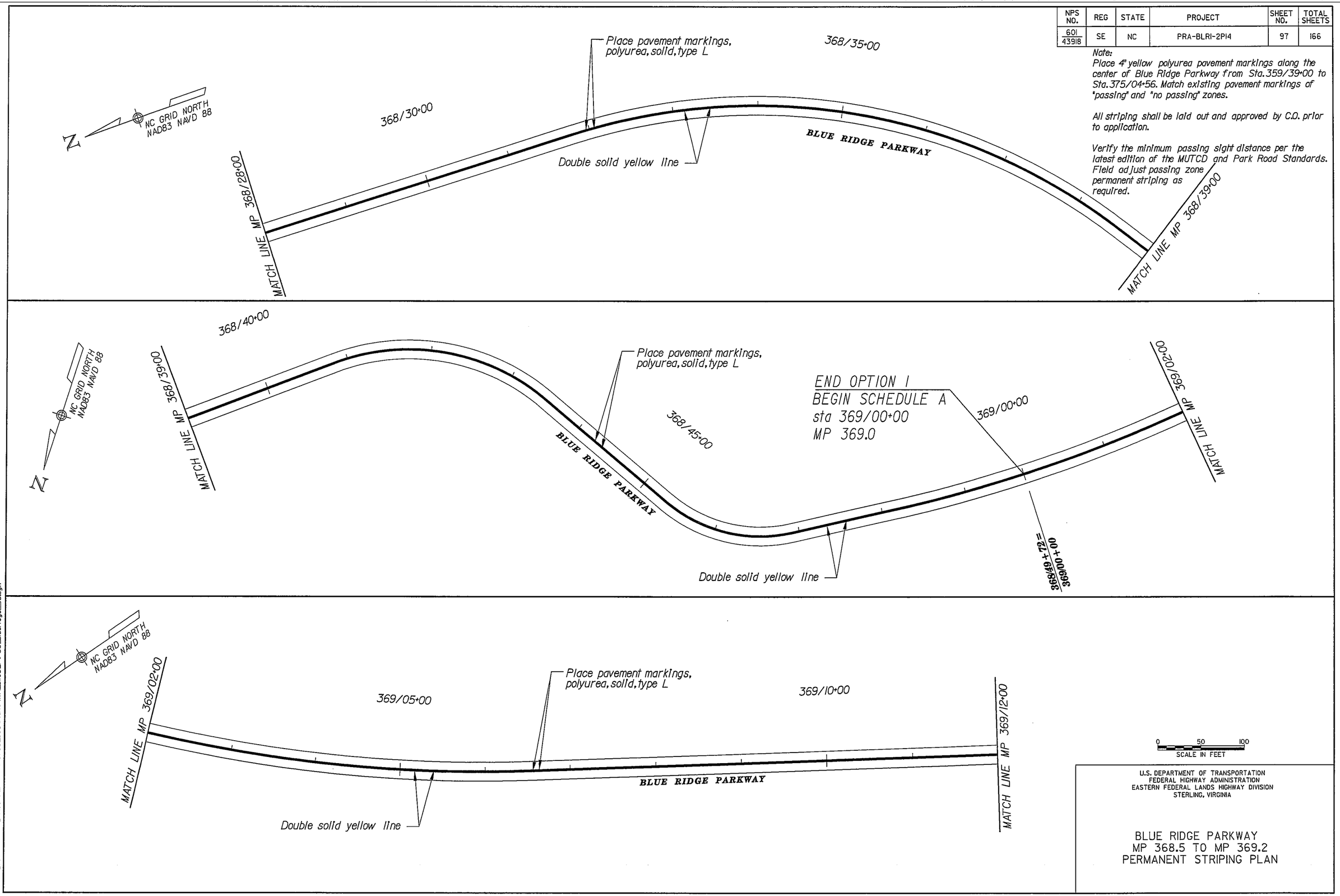

U.S. DEPARTMENT OF TRANSPORTATION
FEDERAL HIGHWAY ADMINISTRATION
EASTERN FEDERAL LANDS HIGHWAY DIVISION
STERLING, VIRGINIA

BLUE RIDGE PARKWAY
MP 368.5 TO MP 369.2
PERMANENT STRIPING PLAN

7/10/2008 12:17:08 PM G:\tra\CT052885\TRA\FINAL_MOD_7\PSS_blueridge_15.dgn

NPS NO.	REG	STATE	PROJECT	SHEET NO.	TOTAL SHEETS
601 / 43918	SE	NC	PRA-BLRI-2P14	98	166

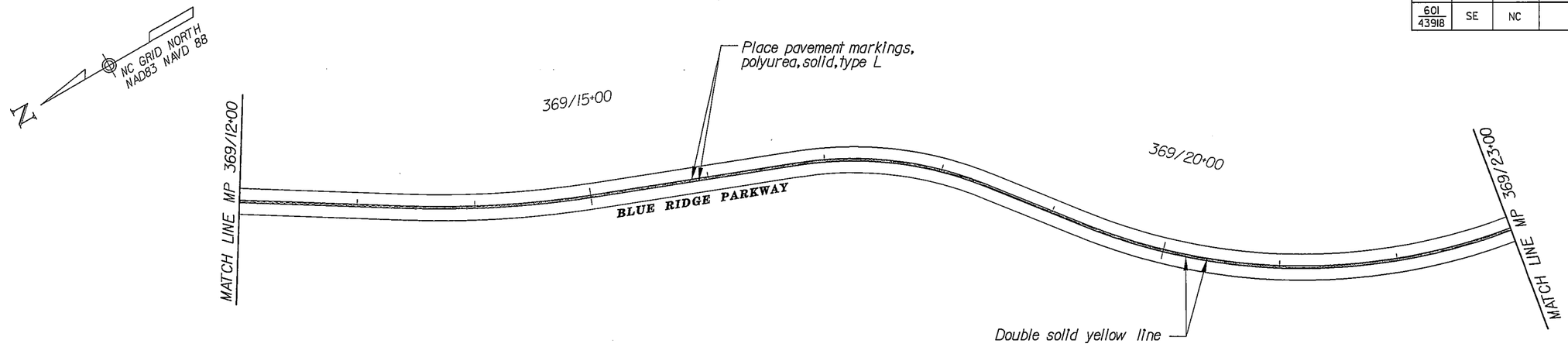

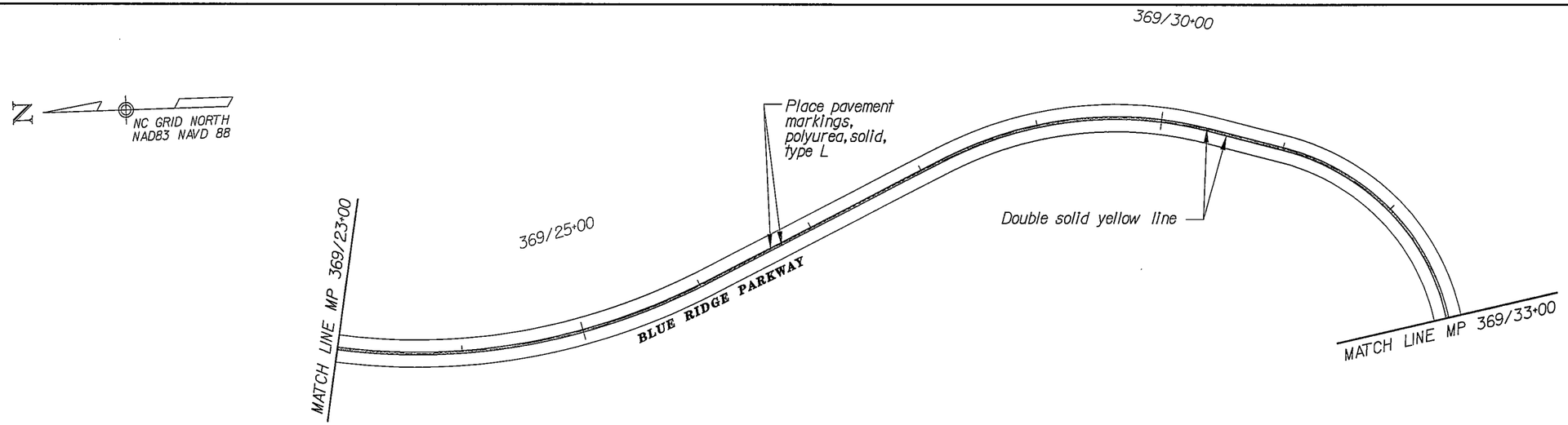

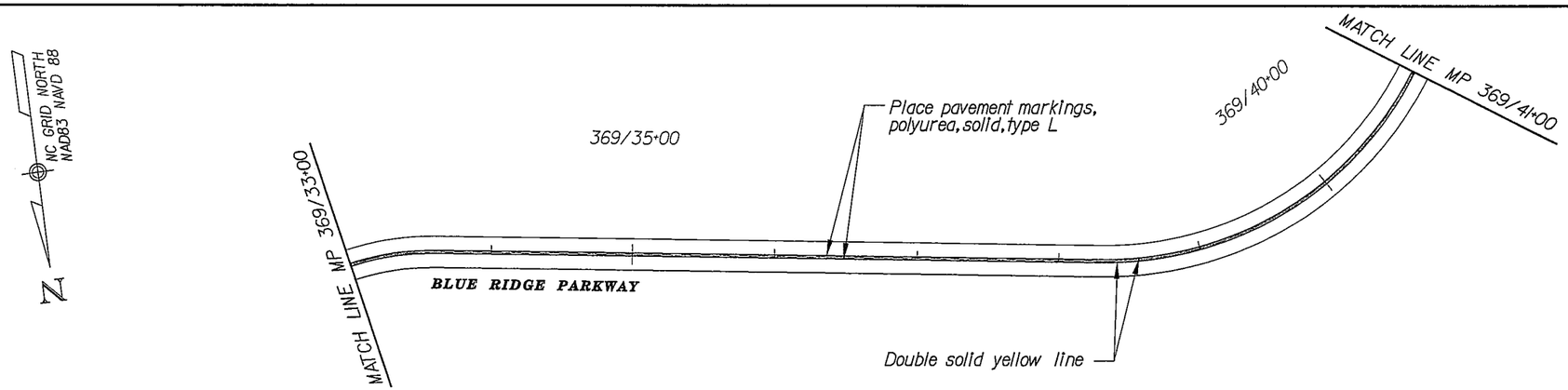

Note:
Place 4" yellow polyurea pavement markings along the center of Blue Ridge Parkway from Sta. 359/39+00 to Sta. 375/04+56. Match existing pavement markings of "passing" and "no passing" zones.

All striping shall be laid out and approved by C.O. prior to application.

Verify the minimum passing sight distance per the latest edition of the MUTCD and Park Road Standards. Field adjust passing zone permanent striping as required.

0 50 100
SCALE IN FEET

U.S. DEPARTMENT OF TRANSPORTATION
FEDERAL HIGHWAY ADMINISTRATION
EASTERN FEDERAL LANDS HIGHWAY DIVISION
STERLING, VIRGINIA

BLUE RIDGE PARKWAY
MP 369.2 TO MP 369.8
PERMANENT STRIPING PLAN

7/10/2008 12:17:17 PM G:\traCT052885\TRA\FINAL_MOD_TXPSS_blueridge_16.dgn

NPS NO.	REG	STATE	PROJECT	SHEET NO.	TOTAL SHEETS
601 43918	SE	NC	PRA-BLRI-2P14	99	166

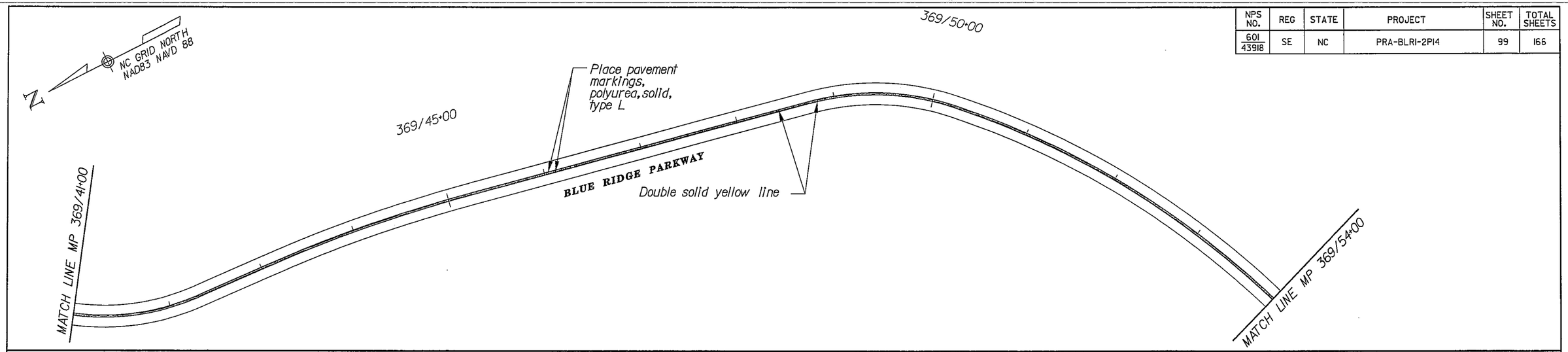

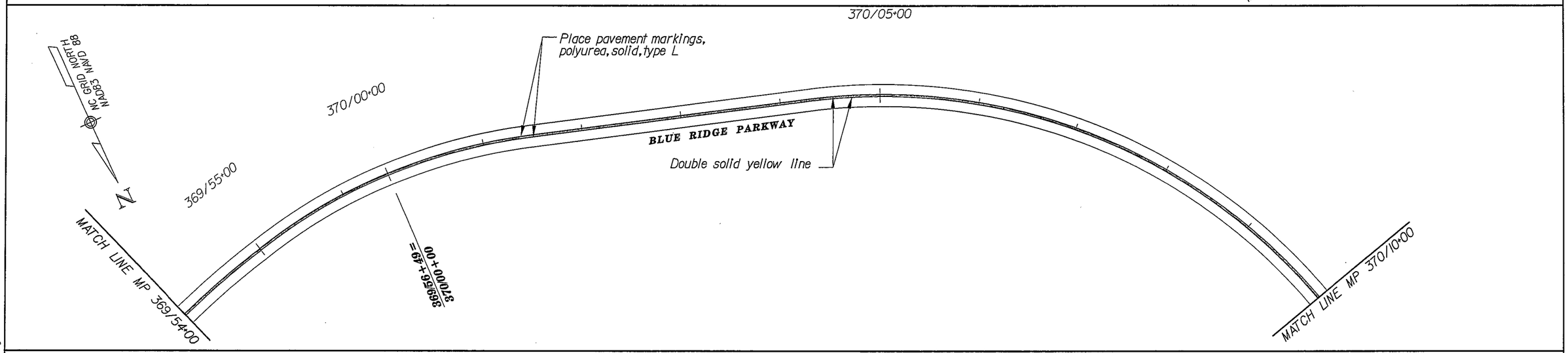

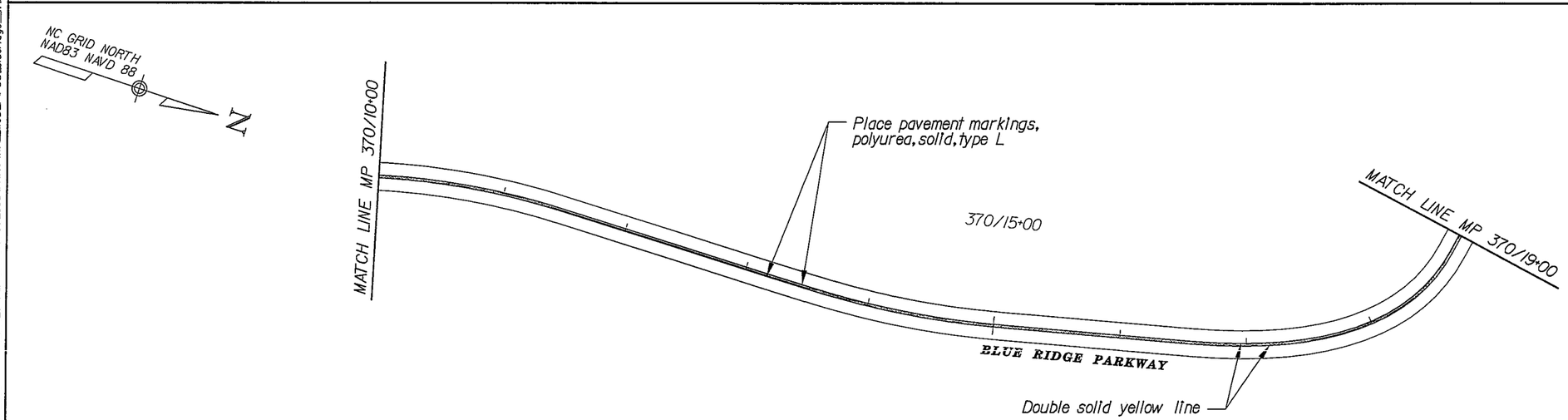

Note:
Place 4" yellow polyurea pavement markings along the center of Blue Ridge Parkway from Sta. 359/39+00 to Sta. 375/04+56. Match existing pavement markings of "passing" and "no passing" zones.

All striping shall be laid out and approved by C.O. prior to application.

Verify the minimum passing sight distance per the latest edition of the MUTCD and Park Road Standards. Field adjust passing zone permanent striping as required.

0 50 100
SCALE IN FEET

U.S. DEPARTMENT OF TRANSPORTATION
FEDERAL HIGHWAY ADMINISTRATION
EASTERN FEDERAL LANDS HIGHWAY DIVISION
STERLING, VIRGINIA

BLUE RIDGE PARKWAY
MP 369.8 TO MP 370.4
PERMANENT STRIPING PLAN

7/10/2008 12:17:25 PM G:\ra\CT052885\TRA\FINAL_MOD_7\PSS_bluerridge_17.dgn

NPS NO.	REG	STATE	PROJECT	SHEET NO.	TOTAL SHEETS
601 / 43918	SE	NC	PRA-BLRI-2P14	100	166

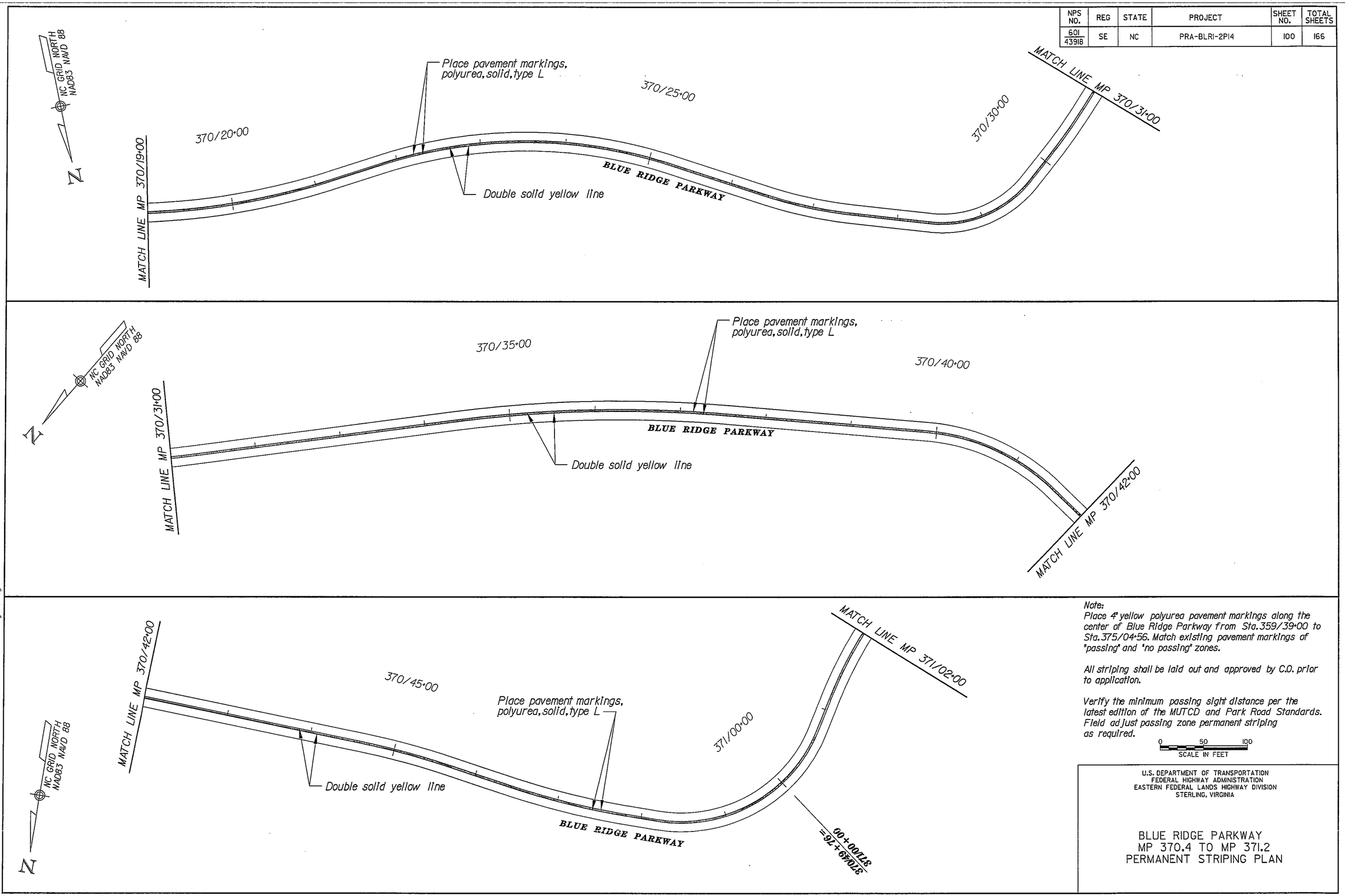

Note:
Place 4" yellow polyurea pavement markings along the center of Blue Ridge Parkway from Sta.359/39+00 to Sta.375/04+56. Match existing pavement markings of "passing" and "no passing" zones.

All striping shall be laid out and approved by C.O. prior to application.

Verify the minimum passing sight distance per the latest edition of the MUTCD and Park Road Standards. Field adjust passing zone permanent striping as required.

0 50 100
SCALE IN FEET

U.S. DEPARTMENT OF TRANSPORTATION
FEDERAL HIGHWAY ADMINISTRATION
EASTERN FEDERAL LANDS HIGHWAY DIVISION
STERLING, VIRGINIA

BLUE RIDGE PARKWAY
MP 370.4 TO MP 371.2
PERMANENT STRIPING PLAN

7/10/2008 12:17:38 PM G:\Vra\CT052885\TRA\FINAL_MOD_7\PSS_blueridge_18.dgn

NPS NO.	REG	STATE	PROJECT	SHEET NO.	TOTAL SHEETS
601 / 43918	SE	NC	PRA-BLRI-2P14	101	166

Note:
Place 4" yellow polyurea pavement markings along the center of Blue Ridge Parkway from Sta.359/39+00 to Sta.375/04+56. Match existing pavement markings of "passing" and "no passing" zones.

All striping shall be laid out and approved by C.O. prior to application.

Verify the minimum passing sight distance per the latest edition of the MUTCD and Park Road Standards. Field adjust passing zone permanent striping as required.

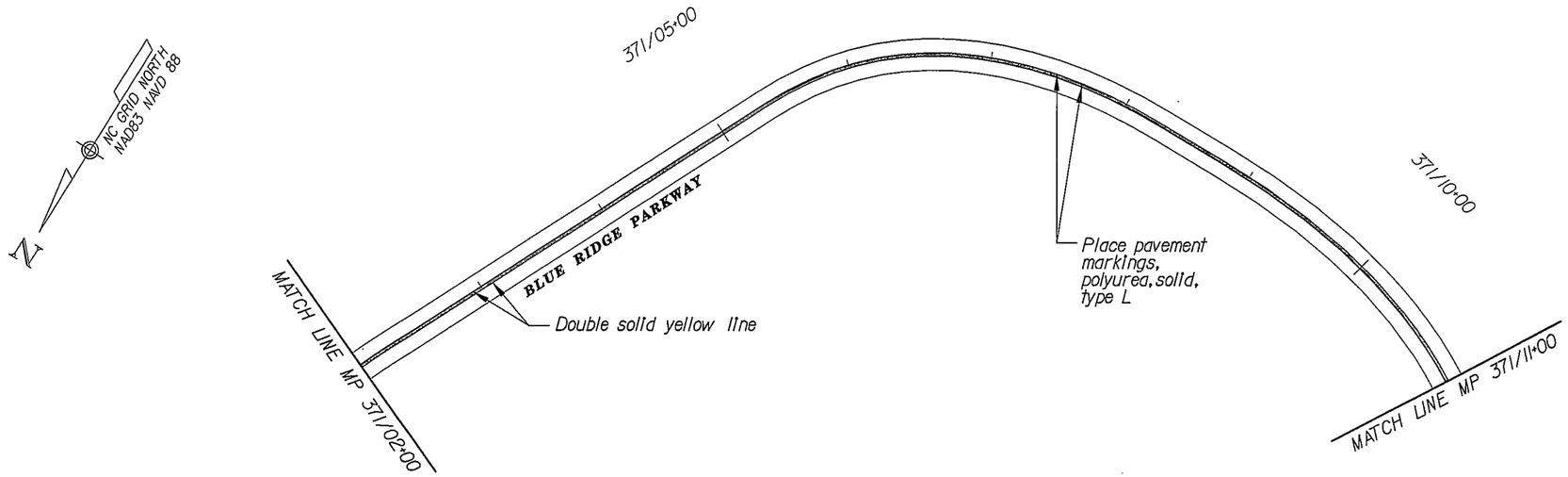

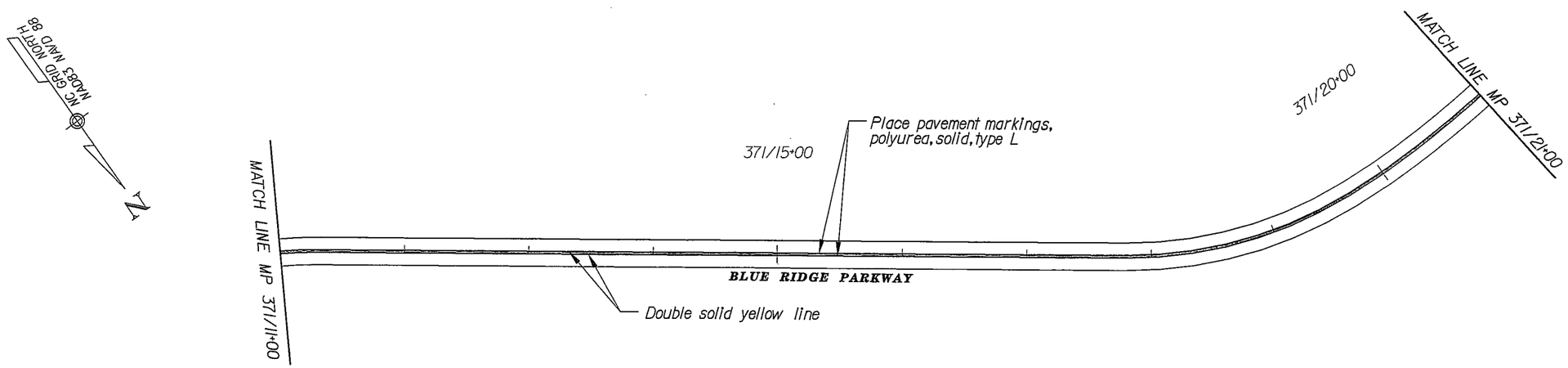

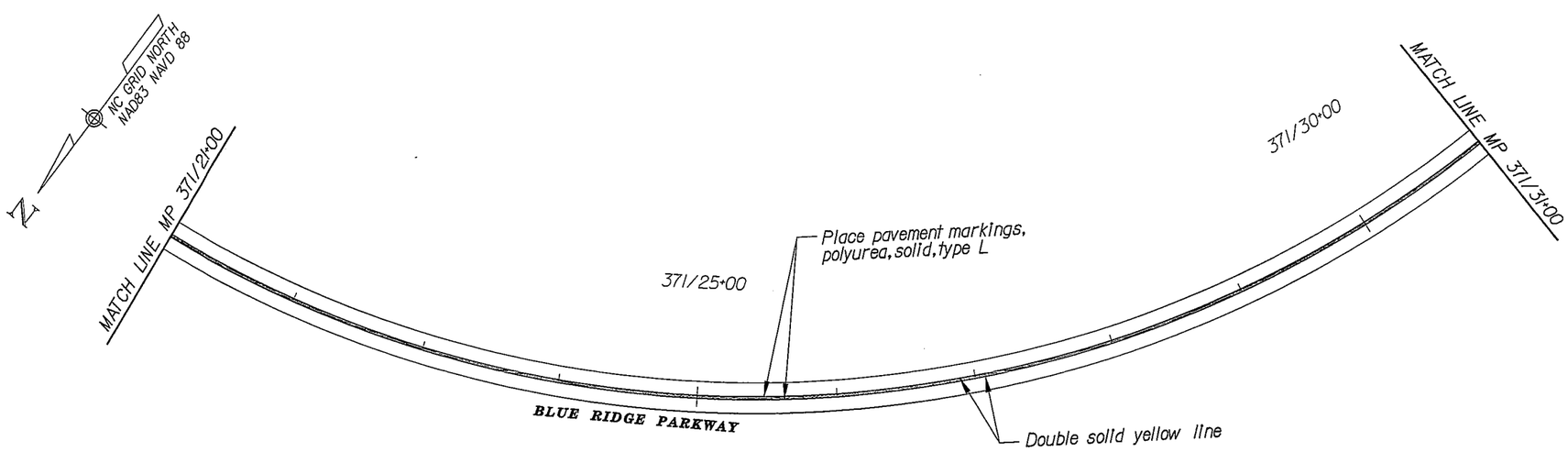

0 50 100
SCALE IN FEET

U.S. DEPARTMENT OF TRANSPORTATION
FEDERAL HIGHWAY ADMINISTRATION
EASTERN FEDERAL LANDS HIGHWAY DIVISION
STERLING, VIRGINIA

BLUE RIDGE PARKWAY
MP 371.2 TO MP 371.6
PERMANENT STRIPING PLAN

7/10/2008 12:17:49 PM G:\ro\CT052885\TRAFINAL_MOD_7\PSS_blueridge_19.dgn

NPS NO.	REG	STATE	PROJECT	SHEET NO.	TOTAL SHEETS
601 / 43918	SE	NC	PRA-BLRI-2P14	102	166

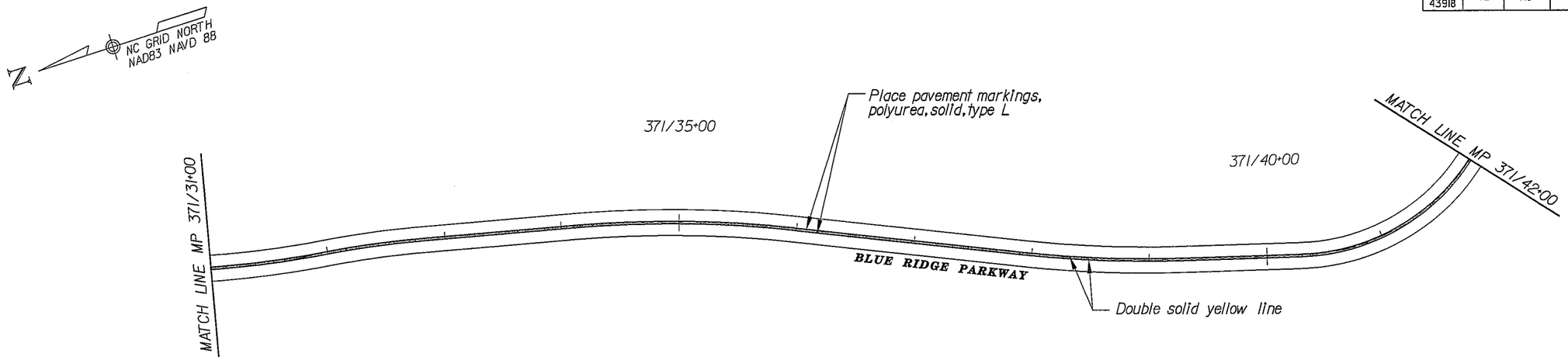

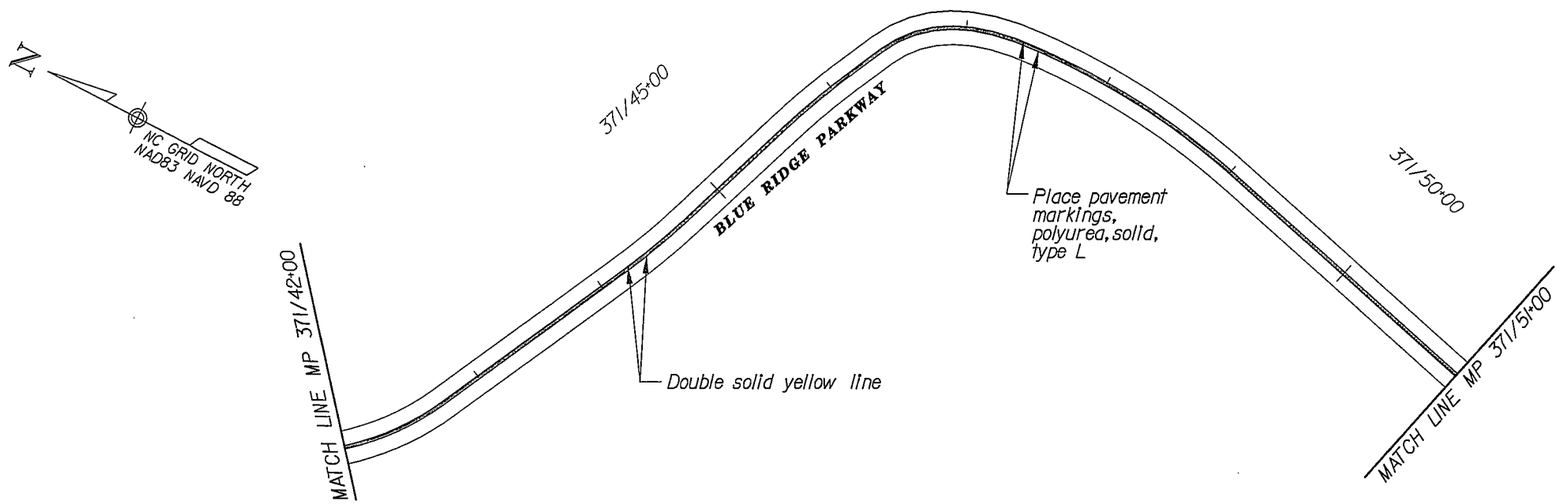

Note:
Place 4" yellow polyurea pavement markings along the center of Blue Ridge Parkway from Sta.359/39+00 to Sta.375/04+56. Match existing pavement markings of "passing" and "no passing" zones.

All striping shall be laid out and approved by C.O. prior to application.

Verify the minimum passing sight distance per the latest edition of the MUTCD and Park Road Standards. Field adjust passing zone permanent striping as required.

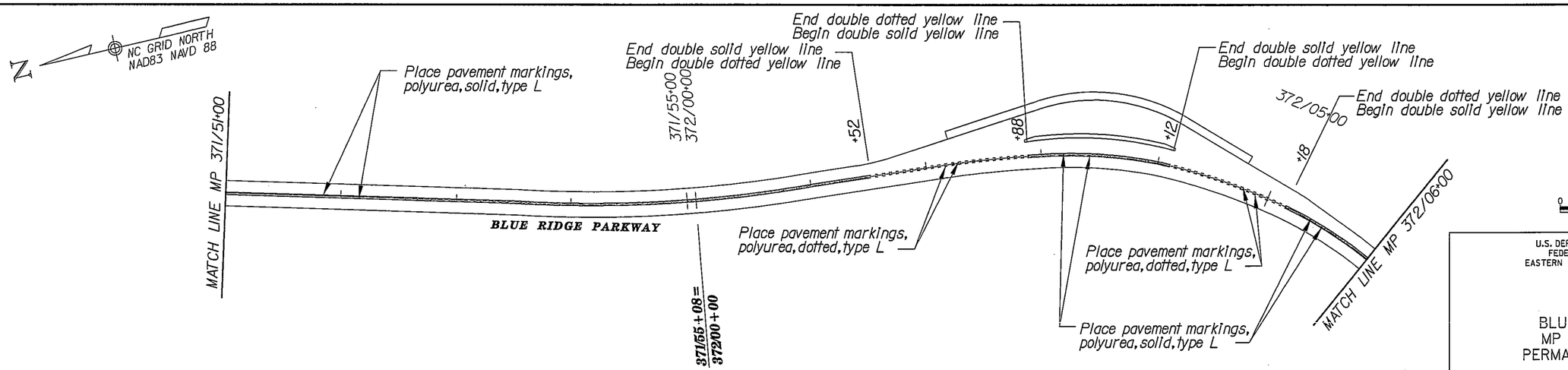

0 50 100
SCALE IN FEET

U.S. DEPARTMENT OF TRANSPORTATION
FEDERAL HIGHWAY ADMINISTRATION
EASTERN FEDERAL LANDS HIGHWAY DIVISION
STERLING, VIRGINIA

BLUE RIDGE PARKWAY
MP 371.6 TO MP 372.1
PERMANENT STRIPING PLAN

7/10/2008 12:18:01 PM G:\Vra\CT052885\TRA\FINAL_MOD_7\PSS_blueridge_20.dgn

NPS NO.	REG	STATE	PROJECT	SHEET NO.	TOTAL SHEETS
601 / 43918	SE	NC	PRA-BLRI-2P14	103	166

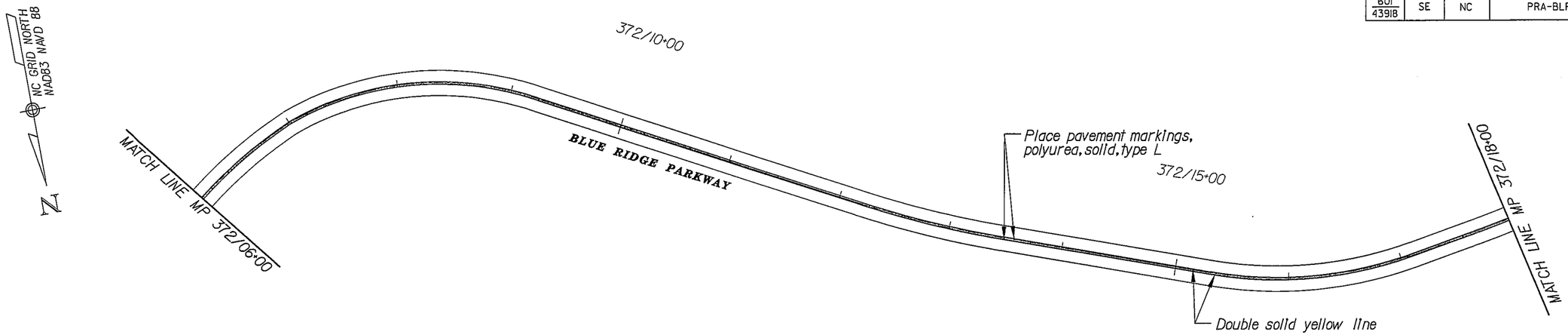

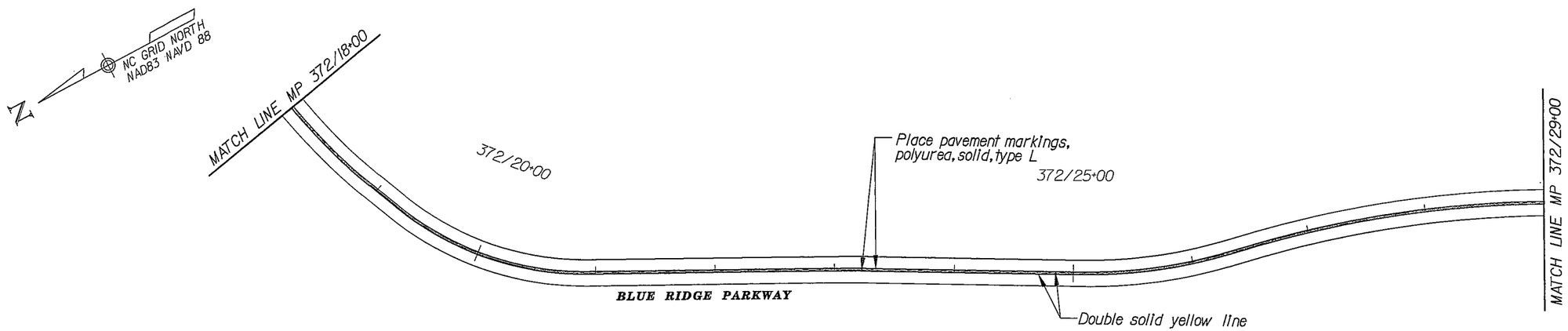

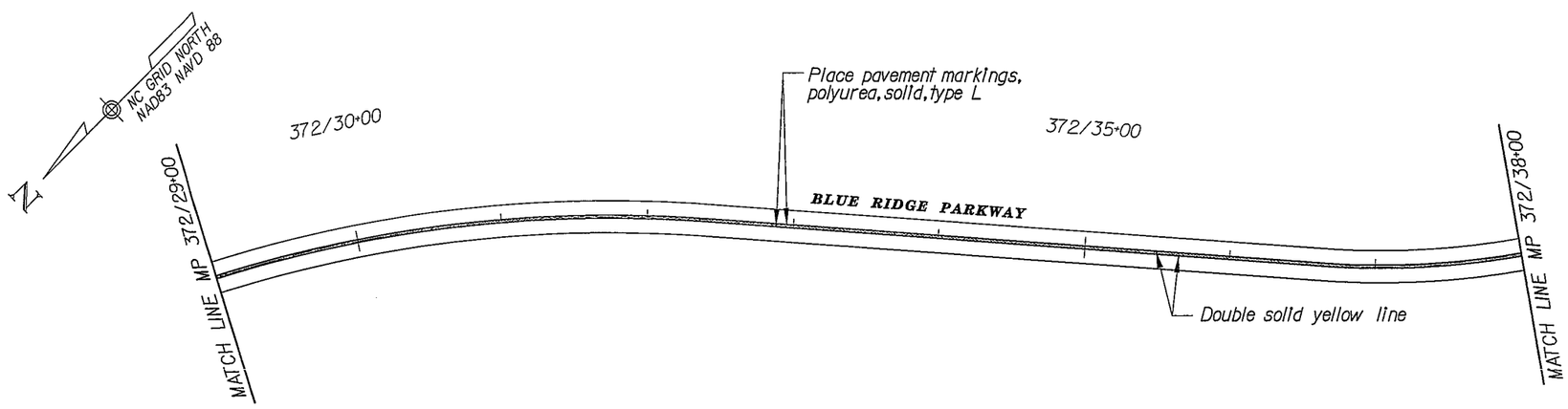

Note:
Place 4" yellow polyurea pavement markings along the center of Blue Ridge Parkway from Sta.359/39+00 to Sta.375/04+56. Match existing pavement markings of "passing" and "no passing" zones.

All striping shall be laid out and approved by C.O. prior to application.

Verify the minimum passing sight distance per the latest edition of the MUTCD and Park Road Standards. Field adjust passing zone permanent striping as required.

0 50 100
SCALE IN FEET

U.S. DEPARTMENT OF TRANSPORTATION
FEDERAL HIGHWAY ADMINISTRATION
EASTERN FEDERAL LANDS HIGHWAY DIVISION
STERLING, VIRGINIA

BLUE RIDGE PARKWAY
MP 372.1 TO MP 372.8
PERMANENT STRIPING PLAN

7/10/2008 12:18:12 PM G:\tra\CT052885\TRA\FINAL_MOD_7\PSS_blueridge_2.dgn

NPS NO.	REG	STATE	PROJECT	SHEET NO.	TOTAL SHEETS
601 / 43918	SE	NC	PRA-BLRI-2P14	104	166

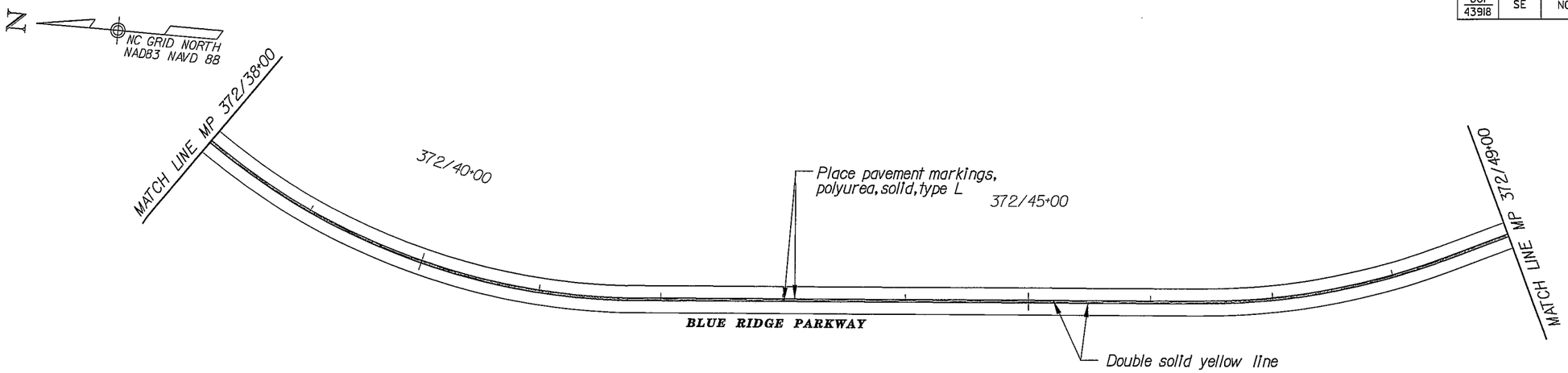

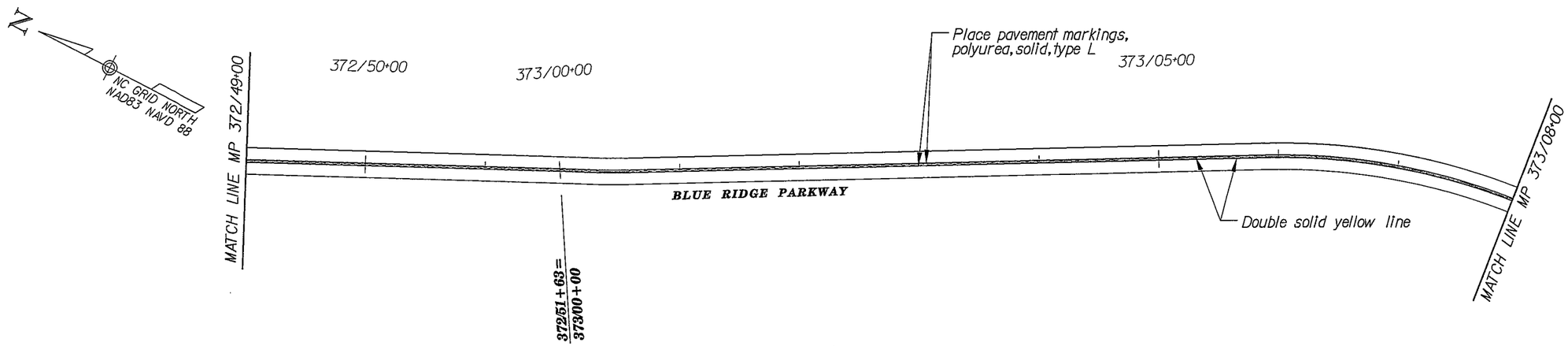

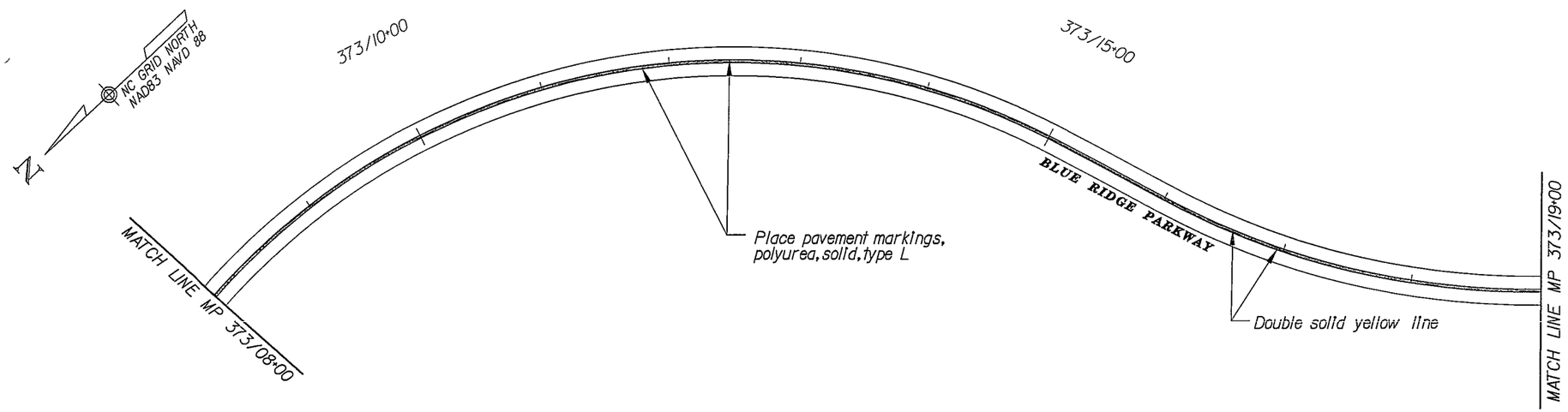

Note:
Place 4" yellow polyurea pavement markings along the center of Blue Ridge Parkway from Sta.359/39+00 to Sta.375/04+56. Match existing pavement markings of "passing" and "no passing" zones.

All striping shall be laid out and approved by C.O. prior to application.

Verify the minimum passing sight distance per the latest edition of the MUTCD and Park Road Standards. Field adjust passing zone permanent striping as required.

0 50 100
SCALE IN FEET

U.S. DEPARTMENT OF TRANSPORTATION
FEDERAL HIGHWAY ADMINISTRATION
EASTERN FEDERAL LANDS HIGHWAY DIVISION
STERLING, VIRGINIA

BLUE RIDGE PARKWAY
MP 372.8 TO MP 373.4
PERMANENT STRIPING PLAN

7/10/2008 12:18:20 PM G:\Trn\CT052885\TRA\FINAL_MOD_7\PSS_blueridge_22.dgn

NPS NO.	REG	STATE	PROJECT	SHEET NO.	TOTAL SHEETS
601 / 43918	SE	NC	PRA-BLRI-2P14	105	166

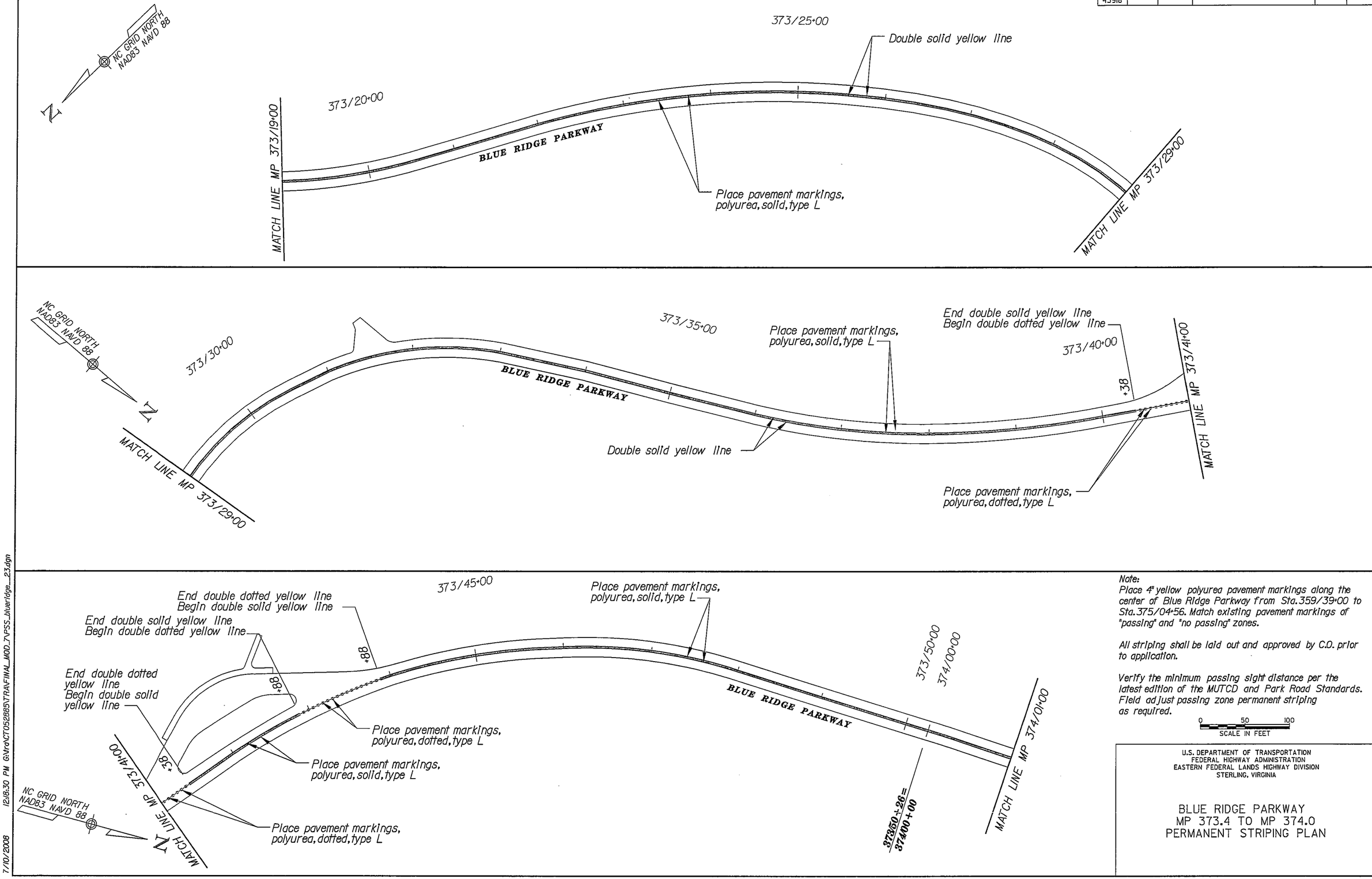

Note:
Place 4" yellow polyurea pavement markings along the center of Blue Ridge Parkway from Sta.359/39+00 to Sta.375/04+56. Match existing pavement markings of "passing" and "no passing" zones.

All striping shall be laid out and approved by C.O. prior to application.

Verify the minimum passing sight distance per the latest edition of the MUTCD and Park Road Standards. Field adjust passing zone permanent striping as required.

0 50 100
SCALE IN FEET

U.S. DEPARTMENT OF TRANSPORTATION
FEDERAL HIGHWAY ADMINISTRATION
EASTERN FEDERAL LANDS HIGHWAY DIVISION
STERLING, VIRGINIA

BLUE RIDGE PARKWAY
MP 373.4 TO MP 374.0
PERMANENT STRIPING PLAN

7/10/2008 12:18:30 PM G:\tra\CT052885\TRA\FINAL_MOD_7\PSS_blueridge__23.dgn

NPS NO.	REG	STATE	PROJECT	SHEET NO.	TOTAL SHEETS
601 / 43918	SE	NC	PRA-BLRI-2P14	106	166

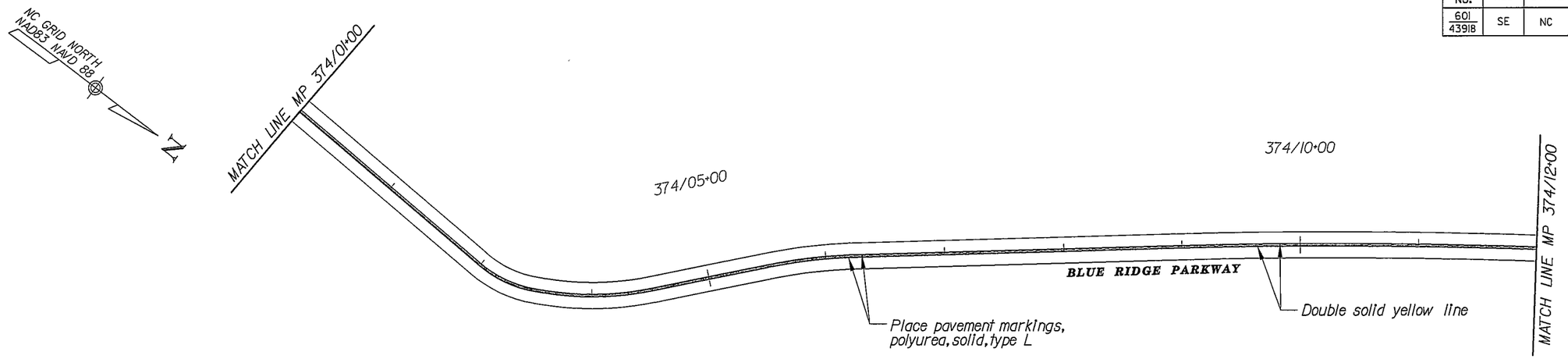

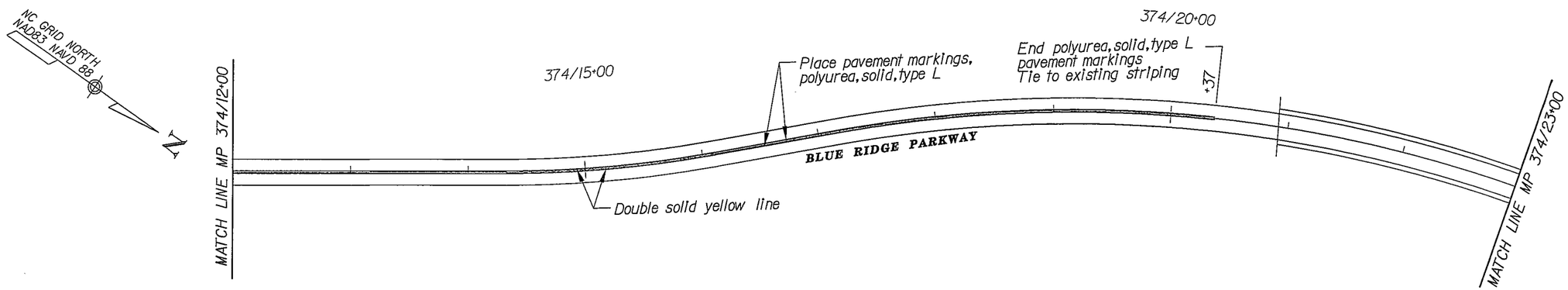

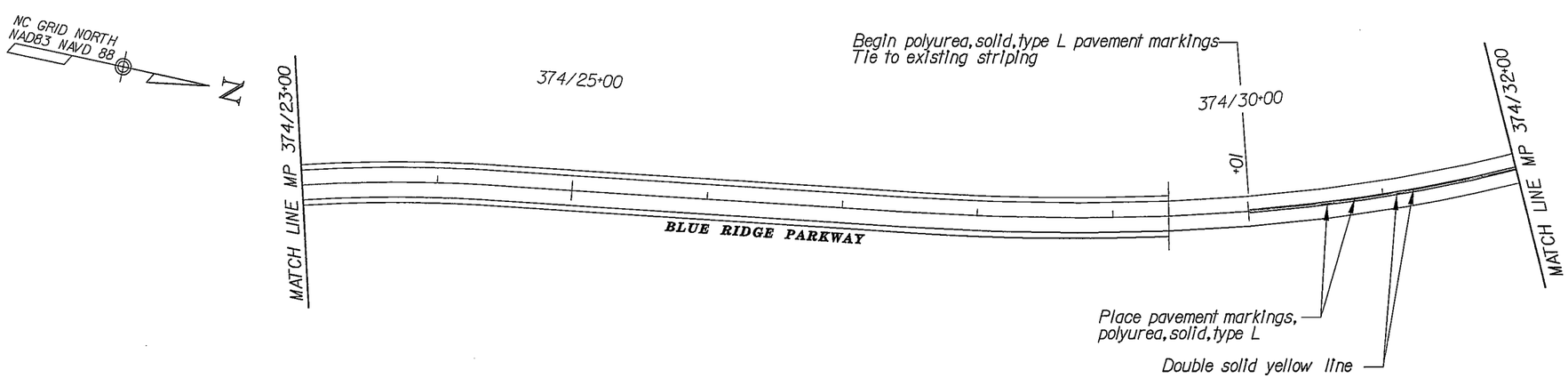

Note:
Place 4" yellow polyurea pavement markings along the center of Blue Ridge Parkway from Sta. 359/39+00 to Sta. 375/04+56. Match existing pavement markings of "passing" and "no passing" zones.

All striping shall be laid out and approved by C.O. prior to application.

Verify the minimum passing sight distance per the latest edition of the MUTCD and Park Road Standards. Field adjust passing zone permanent striping as required.

0 50 100
SCALE IN FEET

U.S. DEPARTMENT OF TRANSPORTATION
FEDERAL HIGHWAY ADMINISTRATION
EASTERN FEDERAL LANDS HIGHWAY DIVISION
STERLING, VIRGINIA

BLUE RIDGE PARKWAY
MP 374.0 TO MP 374.6
PERMANENT STRIPING PLAN

7/10/2008 12:18:38 PM G:\tra\CT052885\TRA\FINAL_MOD_7\PSS_blueridge_24.dgn

NPS NO.	REG	STATE	PROJECT	SHEET NO.	TOTAL SHEETS
601 / 43918	SE	NC	PRA-BLRI-2P14	107	166

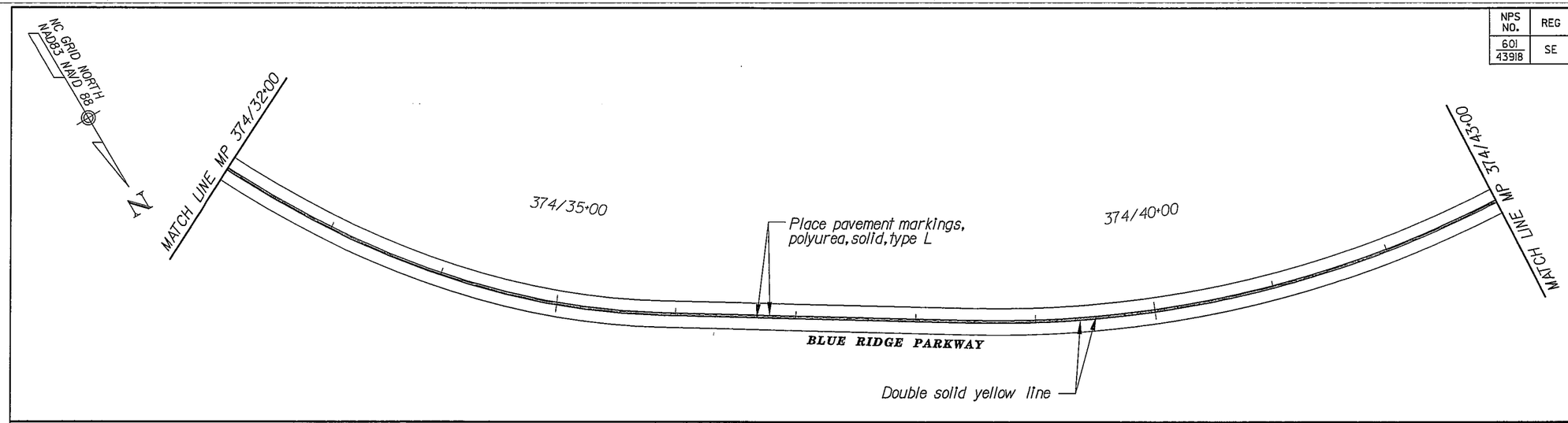

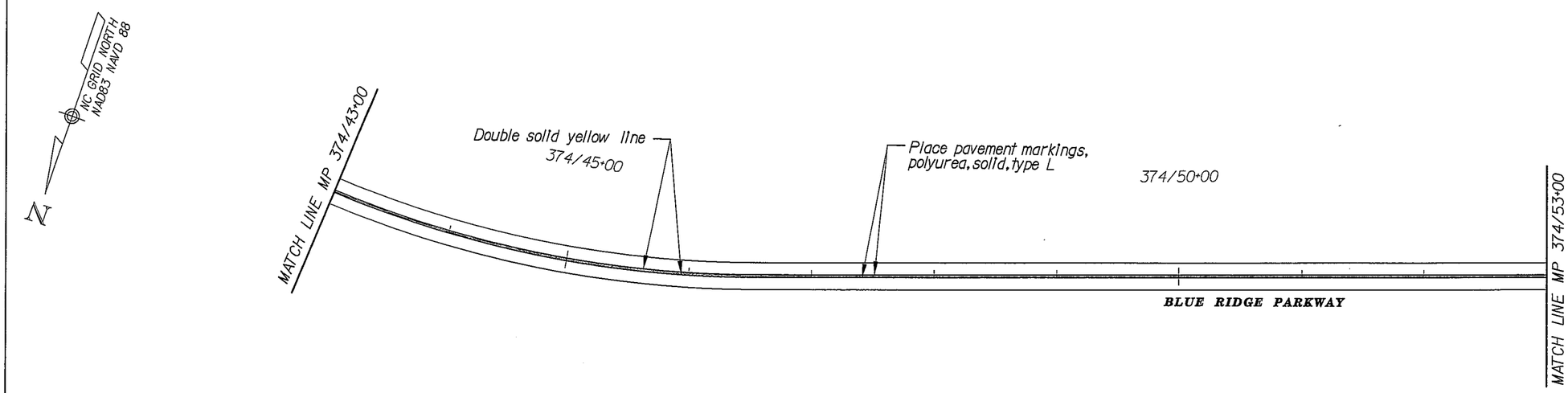

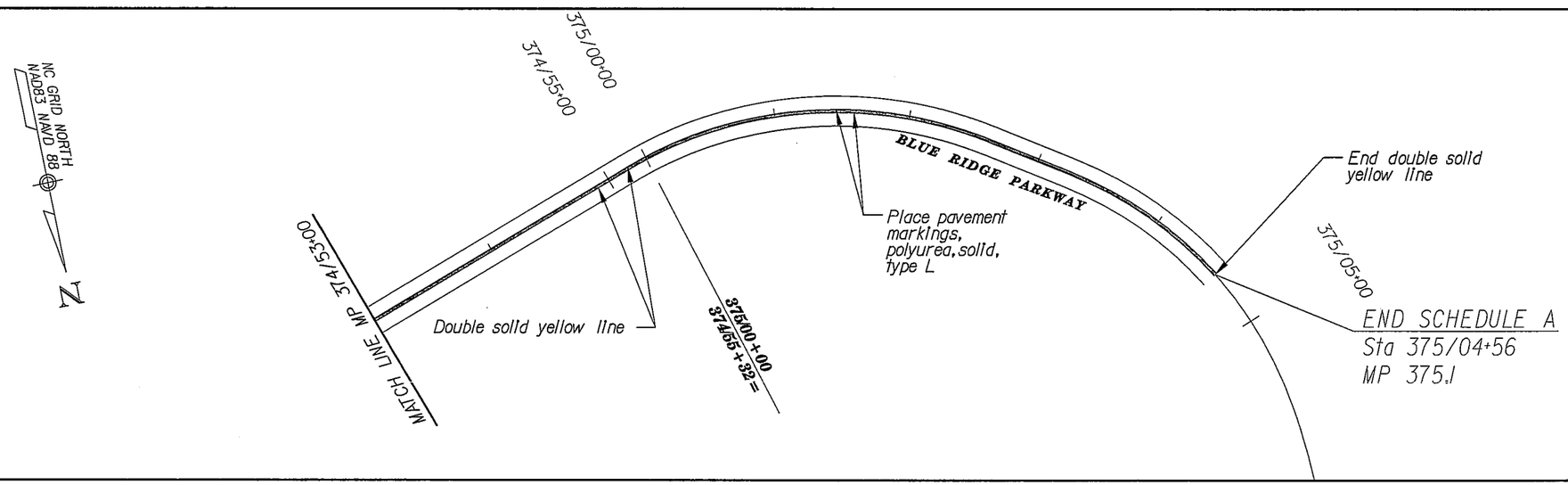

Note:
Place 4" yellow polyurea pavement markings along the center of Blue Ridge Parkway from Sta. 359/39+00 to Sta. 375/04+56. Match existing pavement markings of "passing" and "no passing" zones.

All striping shall be laid out and approved by C.O. prior to application.

Verify the minimum passing sight distance per the latest edition of the MUTCD and Park Road Standards. Field adjust passing zone permanent striping as required.

0 50 100
SCALE IN FEET

U.S. DEPARTMENT OF TRANSPORTATION
FEDERAL HIGHWAY ADMINISTRATION
EASTERN FEDERAL LANDS HIGHWAY DIVISION
STERLING, VIRGINIA

BLUE RIDGE PARKWAY
MP 374.6 TO MP 375.1
PERMANENT STRIPING PLAN

7/10/2008 12:18:49 PM G:\ro\CT052885\TRA\FINAL_MOD_7\PSS_blueridge_25.dgn

NPS NO.	REG	STATE	PROJECT	SHEET NO.	TOTAL SHEETS
601 43918	SE	NC	PRA-BLRI-2P14	108	166

Note:
All striping shall be laid out and approved by C.O. prior to application.

Verify the minimum passing sight distance per the latest edition of the MUTCD and Park Road Standards. Field adjust passing zone permanent striping as required.

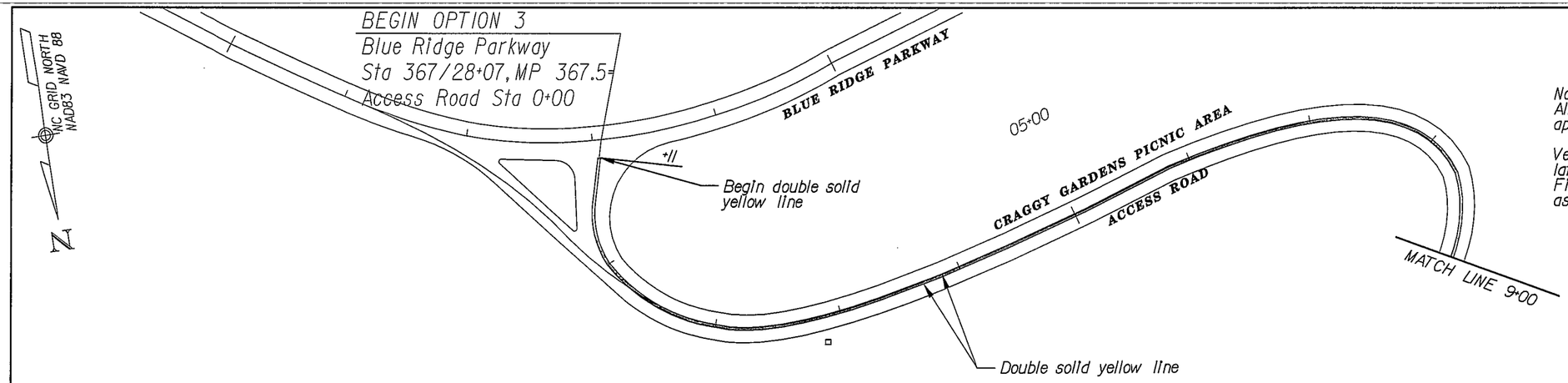

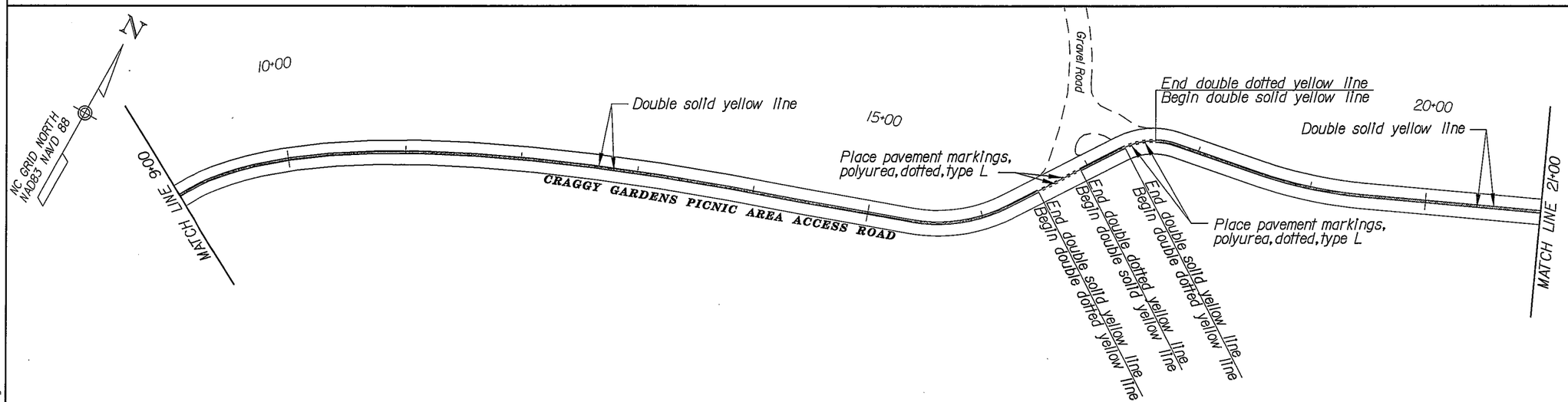

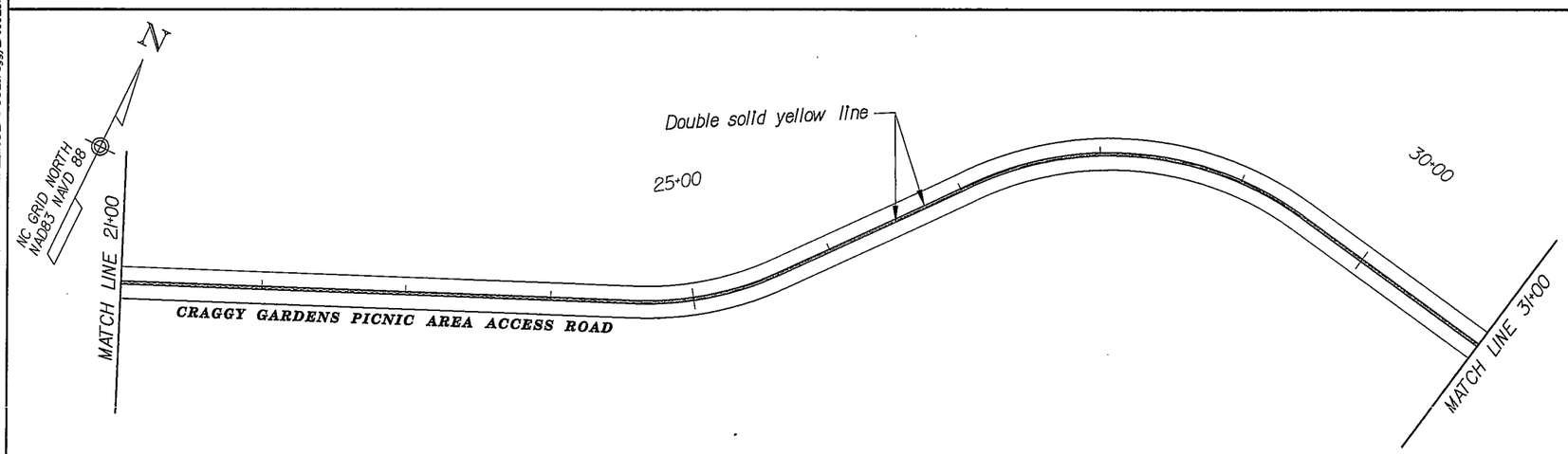

0 50 100
SCALE IN FEET

U.S. DEPARTMENT OF TRANSPORTATION
FEDERAL HIGHWAY ADMINISTRATION
EASTERN FEDERAL LANDS HIGHWAY DIVISION
STERLING, VIRGINIA

CRAGGY GARDEN'S PICNIC AREA
ACCESS ROAD PERMANENT STRIPING PLAN
STA. 0+00 TO 31+00

7/10/2008 1:27:48 PM G:\rro\CT052885\TRAV\FINAL_MOD_7\PSS_craggy_road_01.dgn

NPS NO.	REG	STATE	PROJECT	SHEET NO.	TOTAL SHEETS
601 / 43918	SE	NC	PRA-BLRI-2P14	109	166

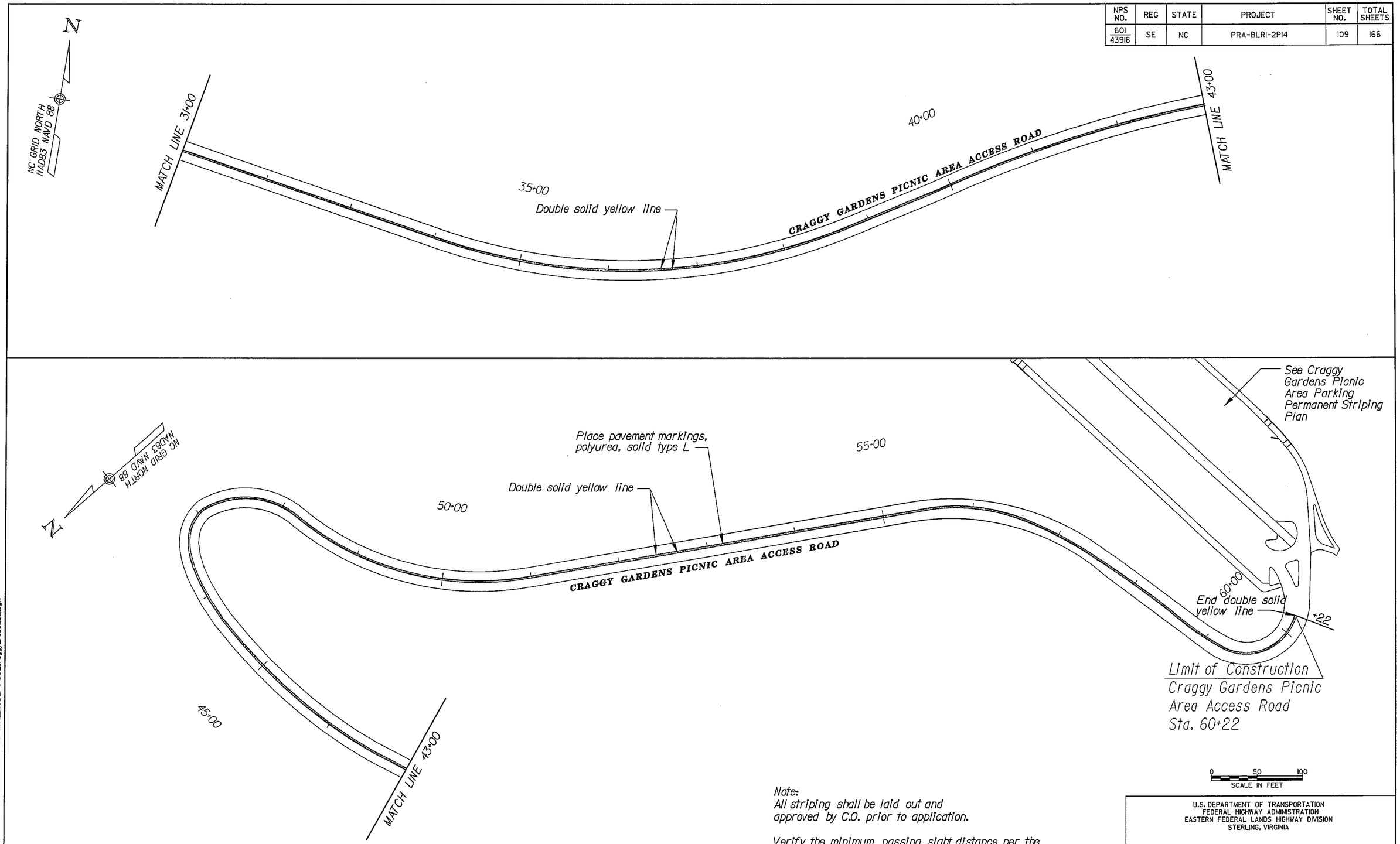

Note:
All striping shall be laid out and approved by C.O. prior to application.

Verify the minimum passing sight distance per the latest edition of the MUTCD and Park Road Standards. Field adjust passing zone permanent striping as required.

U.S. DEPARTMENT OF TRANSPORTATION
FEDERAL HIGHWAY ADMINISTRATION
EASTERN FEDERAL LANDS HIGHWAY DIVISION
STERLING, VIRGINIA

CRAGGY GARDEN'S PICNIC AREA
ACCESS ROAD PERMANENT STRIPING PLAN
STA. 31+00 TO 60+22

7/10/2008 1:29:27 PM G:\ro\CT052885\TRAFFINAL_MOD_7\PSS_craggy_road_02.dgn

NPS NO.	REG	STATE	PROJECT	SHEET NO.	TOTAL SHEETS
601 / 43918	SE	NC	PRA-BLRI-2P14	110	166

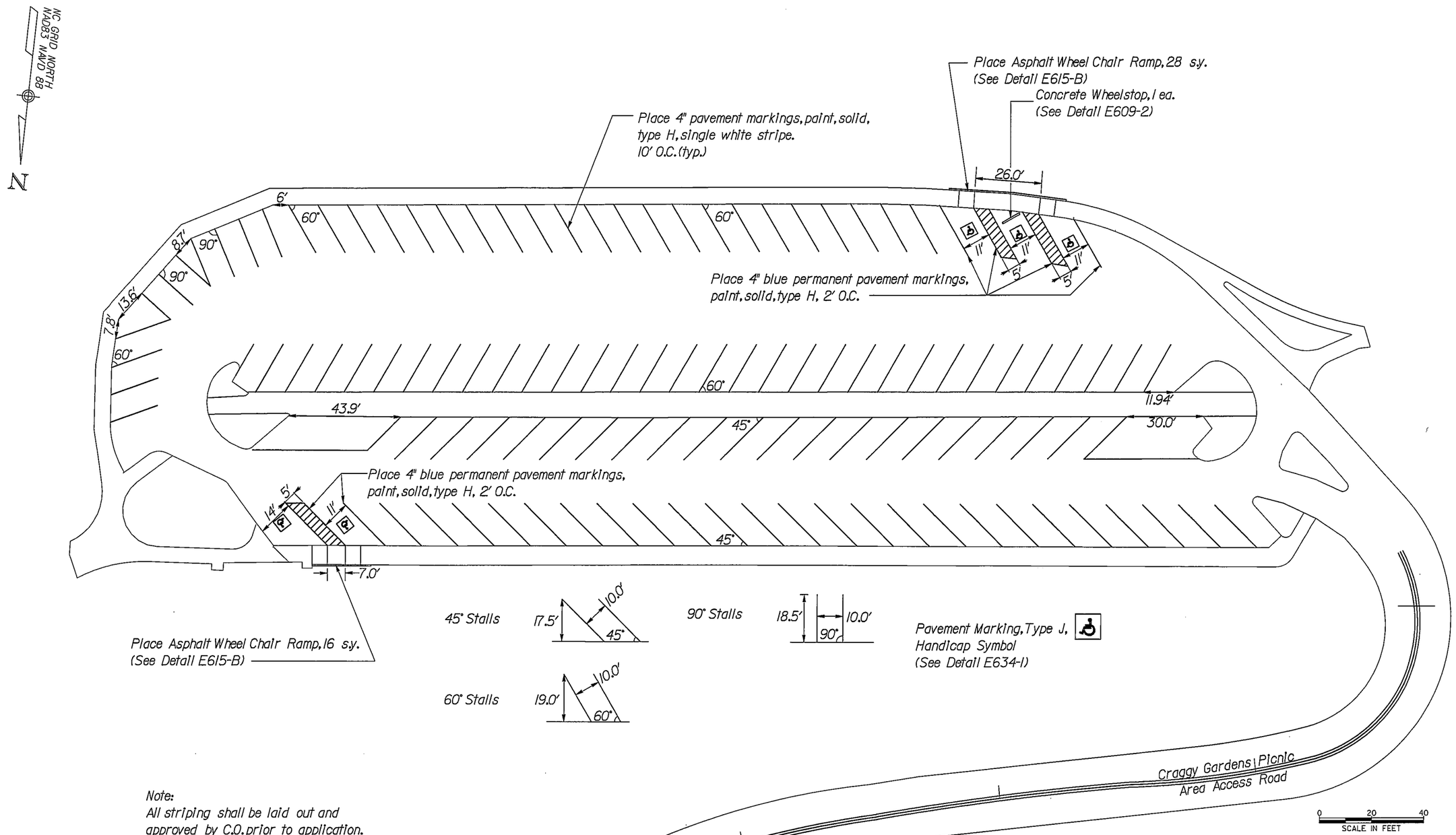

Note:
All striping shall be laid out and approved by C.O. prior to application.

U.S. DEPARTMENT OF TRANSPORTATION
FEDERAL HIGHWAY ADMINISTRATION
EASTERN FEDERAL LANDS HIGHWAY DIVISION
STERLING, VIRGINIA

CRAGGY GARDENS PICNIC AREA PARKING PERMANENT STRIPING PLAN

7/10/2008 1:27:29 PM G:\fra\CT052885\TRA\FINAL_MOD_7\PSS_Craggy_Picnic.dgn

NPS NO.	REG	STATE	PROJECT	SHEET NO.	TOTAL SHEETS
601 / 43918	SE	NC	PRA-BLRI-2P14	111	166

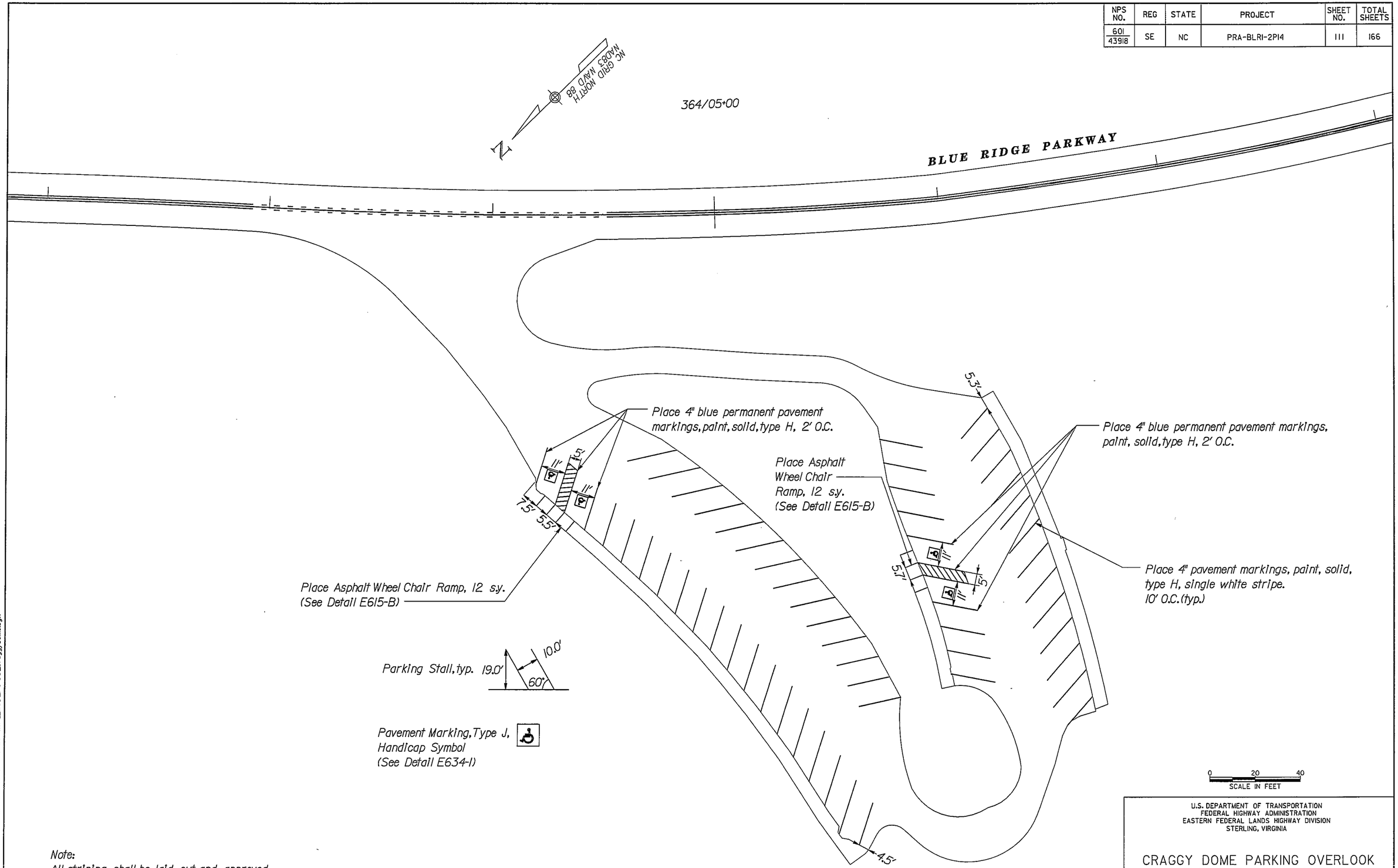

Note:
All striping shall be laid out and approved by C.O. prior to application.

U.S. DEPARTMENT OF TRANSPORTATION
FEDERAL HIGHWAY ADMINISTRATION
EASTERN FEDERAL LANDS HIGHWAY DIVISION
STERLING, VIRGINIA

CRAGGY DOME PARKING OVERLOOK
PERMANENT STRIPING PLAN

7/10/2008 12:25:14 PM G:\traf\CT052885\TRAFFINAL_MOD_7\PSS_Craggydome.dgn

NPS NO.	REG	STATE	PROJECT	SHEET NO.	TOTAL SHEETS
601 / 43918	SE	NC	PRA-BLRI-2P14	112	166

Note:
All striping shall be laid out and approved by C.O. prior to application.

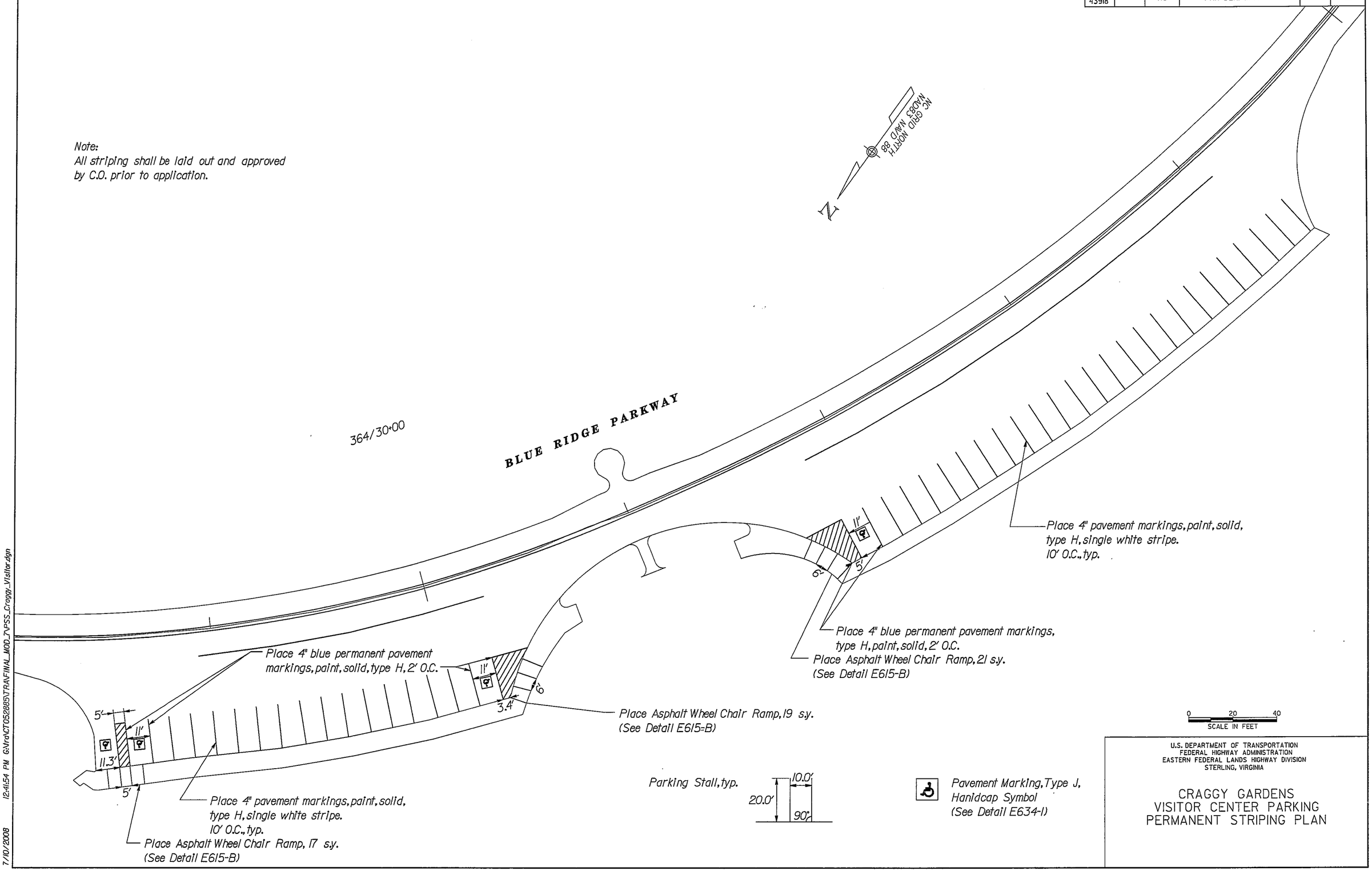

U.S. DEPARTMENT OF TRANSPORTATION
FEDERAL HIGHWAY ADMINISTRATION
EASTERN FEDERAL LANDS HIGHWAY DIVISION
STERLING, VIRGINIA

CRAGGY GARDENS
VISITOR CENTER PARKING
PERMANENT STRIPING PLAN

7/10/2008 12:41:54 PM G:\Tra\CT052885\TRAFINAL_MOD_7\PSS_Craggy_Visitor.dgn

NPS NO.	REG	STATE	PROJECT	SHEET NO.	TOTAL SHEETS
601 43918	SE	NC	PRA-BLRI-2P14	113	166

CRAGGY GARDEN'S PICNIC
AREA ACCESS ROAD
30+30 TO 30+35

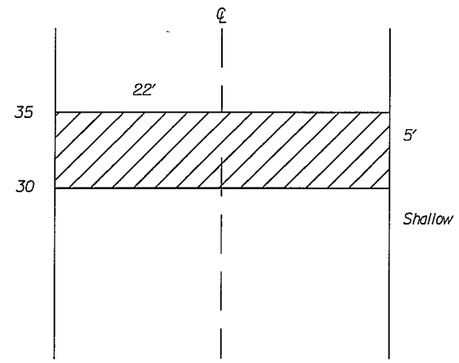

ASPHALT PAVEMENT
SHALLOW DEPTH PATCH, TYPE 1

CRAGGY GARDEN'S PICNIC
AREA ACCESS ROAD
47+80 TO 48+00

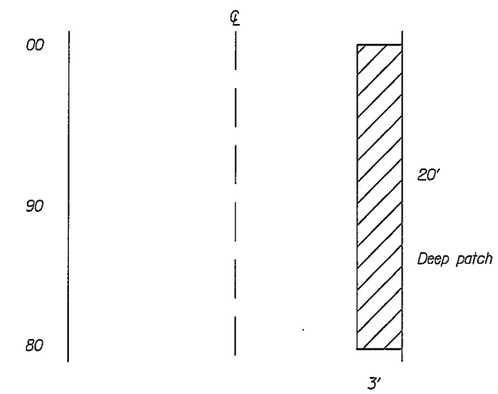

ASPHALT PAVEMENT
FULL DEPTH PATCH, TYPE 2

Note:
All patch work shall be completed prior to milling

CRAGGY GARDEN'S PICNIC
AREA ACCESS ROAD
56+50 TO 56+55

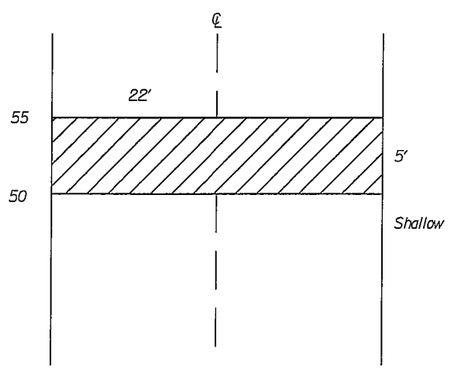

ASPHALT PAVEMENT
SHALLOW DEPTH PATCH, TYPE 1

CRAGGY GARDEN'S PICNIC
AREA ACCESS ROAD
57+45 TO 57+50

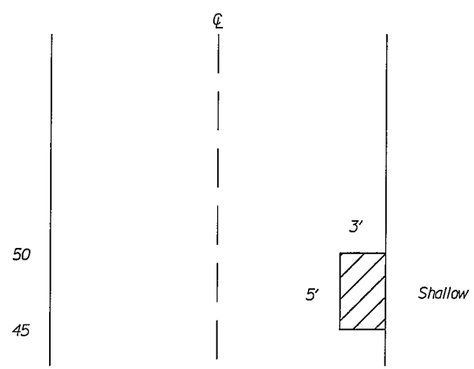

ASPHALT PAVEMENT
SHALLOW DEPTH PATCH, TYPE 1

CRAGGY GARDEN'S PICNIC
AREA ACCESS ROAD
60+50 TO 60+55

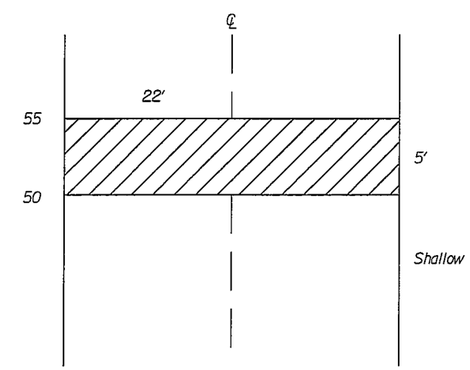

ASPHALT PAVEMENT
SHALLOW DEPTH PATCH, TYPE 1

See Detail E419-A

U.S. DEPARTMENT OF TRANSPORTATION
FEDERAL HIGHWAY ADMINISTRATION
EASTERN FEDERAL LANDS HIGHWAY DIVISION
STERLING, VIRGINIA

PAVEMENT PATCH LOCATIONS

CRAGGY GARDEN'S PICNIC AREA
ACCESS ROAD

SCALE : NO SCALE

Drawing No. 1 of 10

7/10/2008 12:23:06 PM G:\Tra\CT052885\TRAFINAL_MOD_7\patch_01.dgn

NPS NO.	REG	STATE	PROJECT	SHEET NO.	TOTAL SHEETS
601 / 43918	SE	NC	PRA-BLRI-2P14	114	166

MILE MARKER 361
33+03 TO 33+07

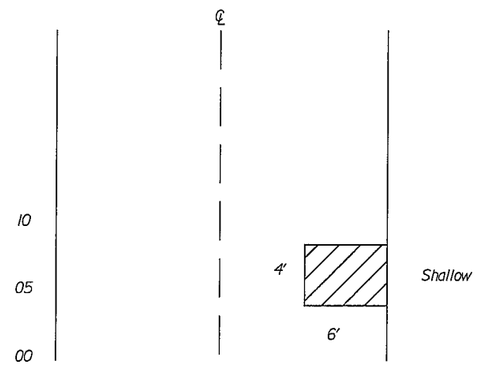

ASPHALT PAVEMENT
SHALLOW DEPTH PATCH,TYPE I

MILE MARKER 361
40+95 TO 41+00

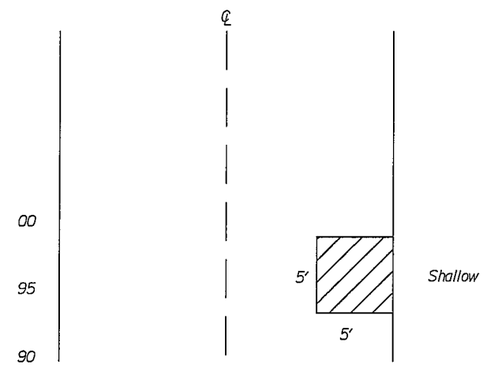

ASPHALT PAVEMENT
SHALLOW DEPTH PATCH,TYPE I

MILE MARKER 361
41+25 TO 41+35

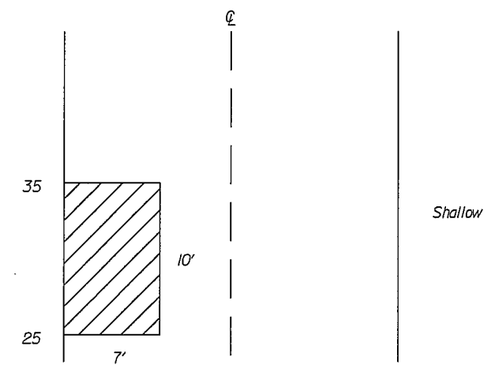

ASPHALT PAVEMENT
SHALLOW DEPTH PATCH,TYPE I

Note:
All patch work shall be completed prior to milling

MILE MARKER 361
43+15 TO 43+20

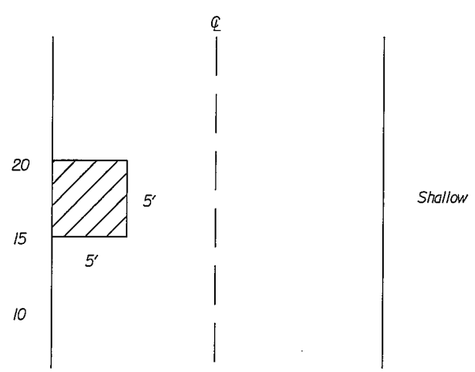

ASPHALT PAVEMENT
SHALLOW DEPTH PATCH,TYPE I

MILE MARKER 362
34+80 TO 34+85

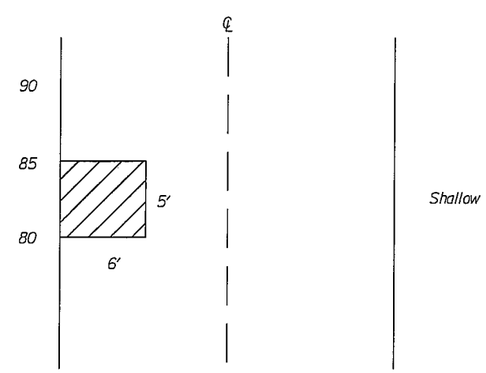

ASPHALT PAVEMENT
SHALLOW DEPTH PATCH,TYPE I

MILE MARKER 362
40+47 TO 40+52

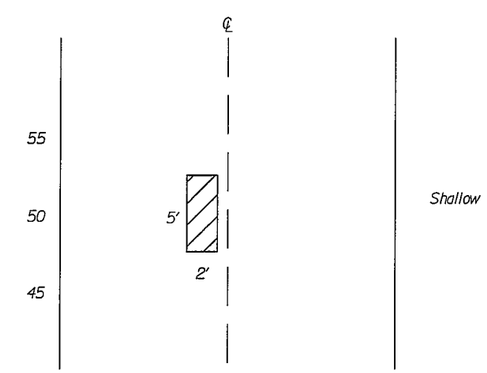

ASPHALT PAVEMENT
SHALLOW DEPTH PATCH,TYPE I

See Detail E419-A

U.S. DEPARTMENT OF TRANSPORTATION
FEDERAL HIGHWAY ADMINISTRATION
EASTERN FEDERAL LANDS HIGHWAY DIVISION
STERLING, VIRGINIA

PAVEMENT PATCH LOCATIONS

PARKWAY MAINLINE

SCALE : NO SCALE

Drawing No. 2 of 10

7/10/2008 12:23:15 PM G:\tra\CT052885\TRAFFWAL_MOD_7\patch_02.dgn

NPS NO.	REG	STATE	PROJECT	SHEET NO.	TOTAL SHEETS
601 / 43918	SE	NC	PRA-BLRI-2P14	115	166

MILE MARKER 363
51+52 TO 51+57

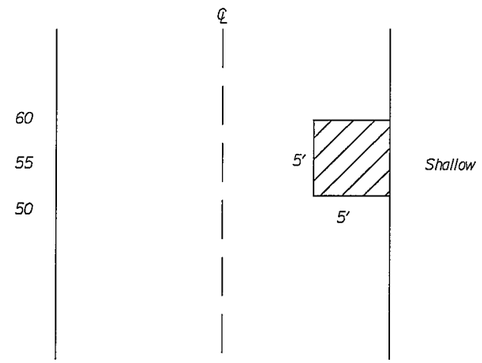

ASPHALT PAVEMENT
SHALLOW DEPTH PATCH, TYPE I

MILE MARKER 364
6+90 TO 6+95

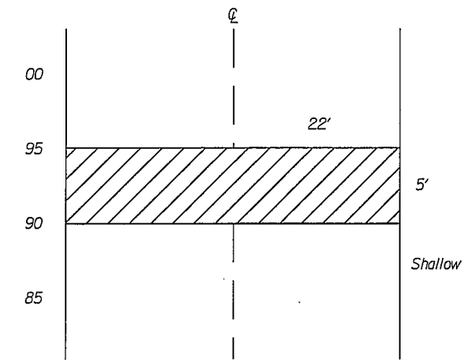

ASPHALT PAVEMENT
SHALLOW DEPTH PATCH, TYPE I

Note:
All patch work shall be completed prior to milling

MILE MARKER 364
12+80 TO 12+85

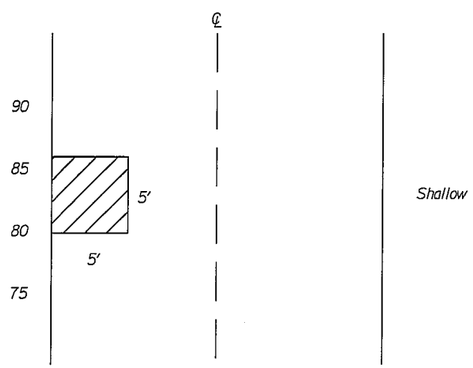

ASPHALT PAVEMENT
SHALLOW DEPTH PATCH, TYPE I

MILE MARKER 364
20+55 TO 20+65

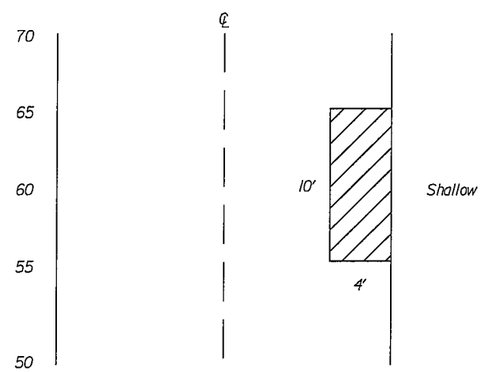

ASPHALT PAVEMENT
SHALLOW DEPTH PATCH, TYPE I

MILE MARKER 364
30+95 TO 31+00

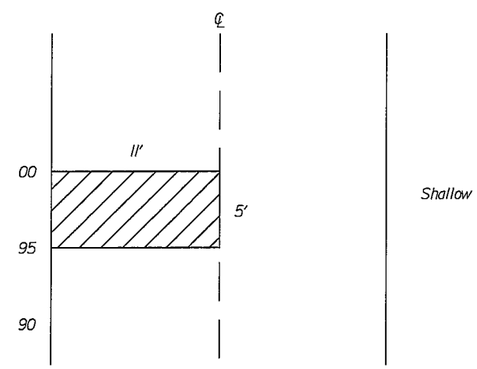

ASPHALT PAVEMENT
SHALLOW DEPTH PATCH, TYPE I

See Detail E419-A

U.S. DEPARTMENT OF TRANSPORTATION
FEDERAL HIGHWAY ADMINISTRATION
EASTERN FEDERAL LANDS HIGHWAY DIVISION
STERLING, VIRGINIA

PAVEMENT PATCH LOCATIONS

PARKWAY MAINLINE

SCALE : NO SCALE

Drawing No. 3 of 10

7/10/2008 12:23:23 PM G:\tra\CT052885\TRA\FINAL_MOD_7\patch_03.dgn

NPS NO.	REG	STATE	PROJECT	SHEET NO.	TOTAL SHEETS
601 / 43918	SE	NC	PRA-BLRI-2P14	116	166

MILE MARKER 364
34+45 TO 34+50

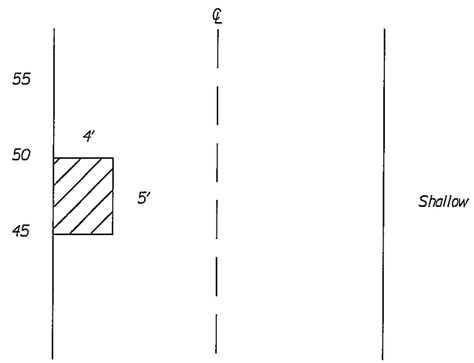

ASPHALT PAVEMENT
SHALLOW DEPTH PATCH,TYPE I

MILE MARKER 364
37+80 TO 38+90

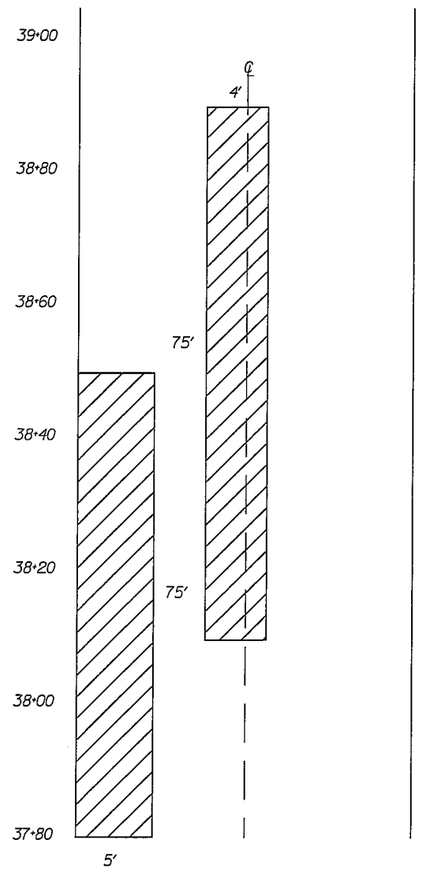

ASPHALT PAVEMENT
SHALLOW DEPTH PATCH,TYPE I

MILE MARKER 365
3+35 TO 3+75

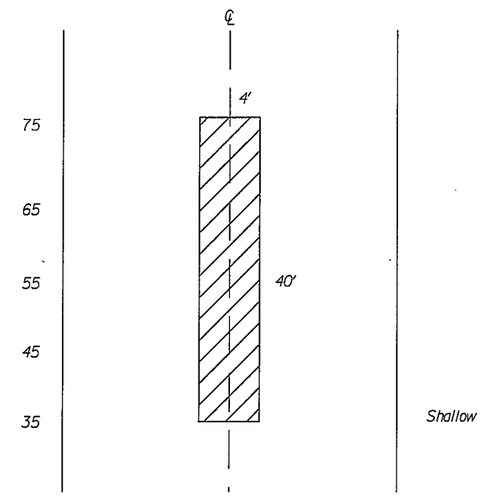

ASPHALT PAVEMENT
SHALLOW DEPTH PATCH,TYPE I

Note:
All patch work shall be completed prior to milling

MILE MARKER 364
40+87 TO 40+92

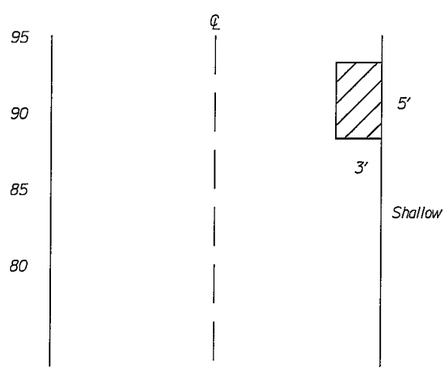

ASPHALT PAVEMENT
SHALLOW DEPTH PATCH,TYPE I

MILE MARKER 365
4+05 TO 4+15

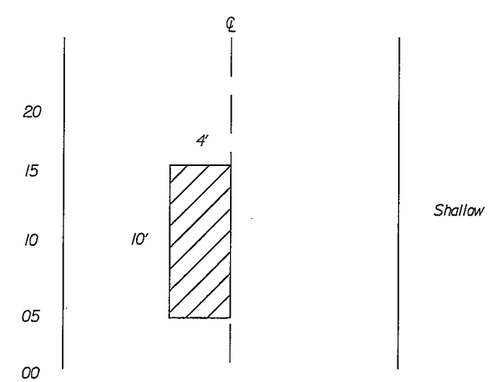

ASPHALT PAVEMENT
SHALLOW DEPTH PATCH,TYPE I

See Detail E419-A

U.S. DEPARTMENT OF TRANSPORTATION
FEDERAL HIGHWAY ADMINISTRATION
EASTERN FEDERAL LANDS HIGHWAY DIVISION
STERLING, VIRGINIA

PAVEMENT PATCH LOCATIONS

PARKWAY MAINLINE

SCALE : NO SCALE

Drawing No. 4 of 10

7/10/2008 12:23:34 PM G:\fra\CT052885\TRAFINAL_MOD_7\patch_04.dgn

NPS NO.	REG	STATE	PROJECT	SHEET NO.	TOTAL SHEETS
601 / 43918	SE	NC	PRA-BLRI-2P14	117	166

MILE MARKER 365
4+40 TO 4+65

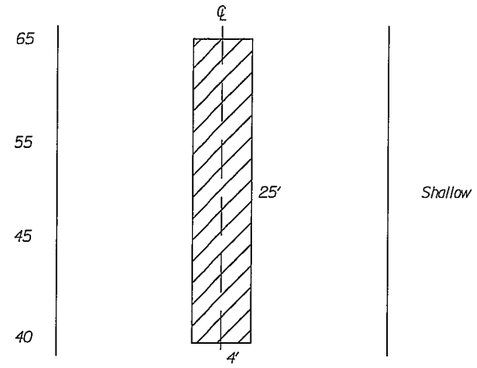

ASPHALT PAVEMENT
SHALLOW DEPTH PATCH, TYPE 1

MILE MARKER 365
4+80 TO 4+85

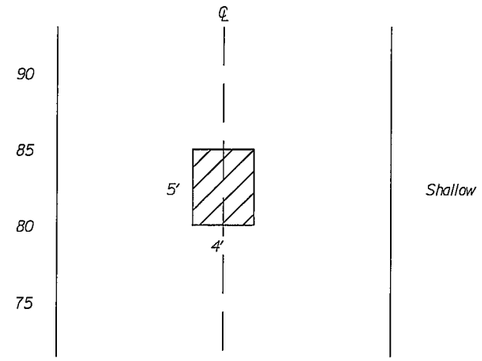

ASPHALT PAVEMENT
SHALLOW DEPTH PATCH, TYPE 1

MILE MARKER 365
12+90 TO 12+95

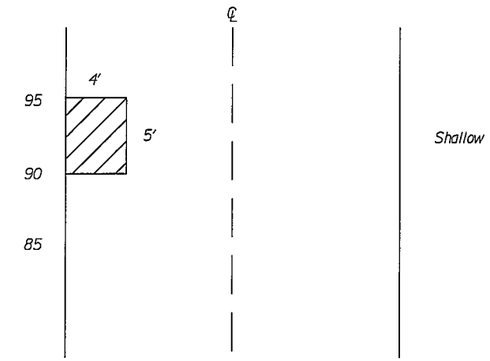

ASPHALT PAVEMENT
SHALLOW DEPTH PATCH, TYPE 1

MILE MARKER 365
18+45 TO 18+52

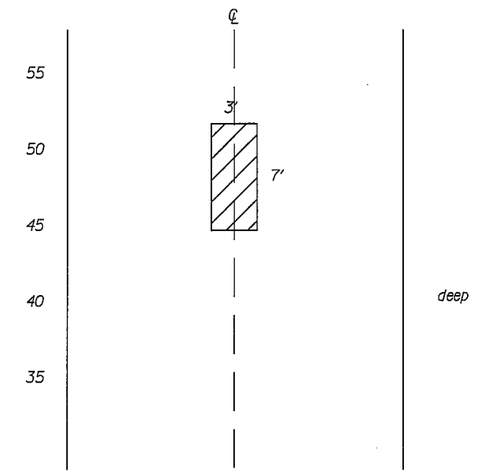

ASPHALT PAVEMENT
FULL DEPTH PATCH, TYPE 2

MILE MARKER 365
15+90 TO 16+05

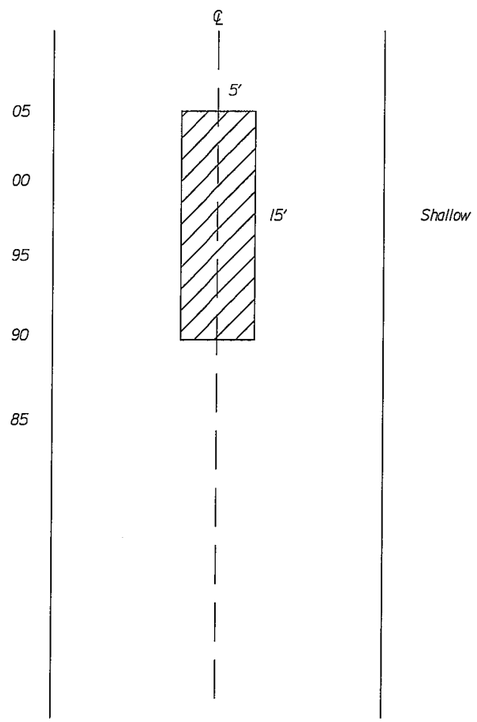

ASPHALT PAVEMENT
SHALLOW DEPTH PATCH, TYPE 1

MILE MARKER 365
17+00 TO 17+20

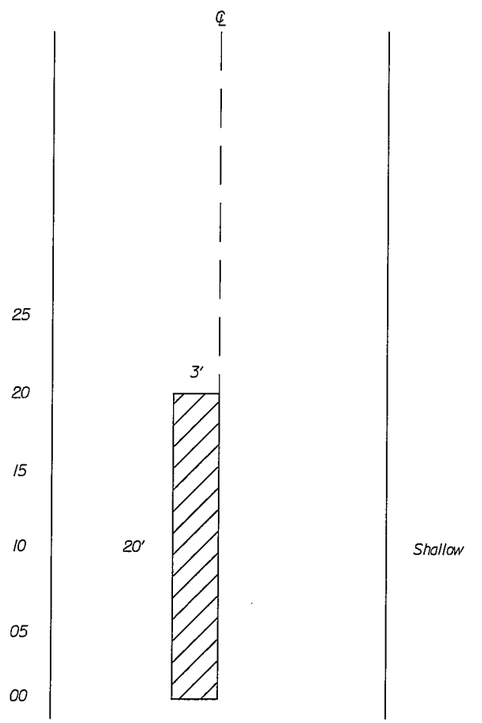

ASPHALT PAVEMENT
SHALLOW DEPTH PATCH, TYPE 1

MILE MARKER 365
17+85 TO 18+20

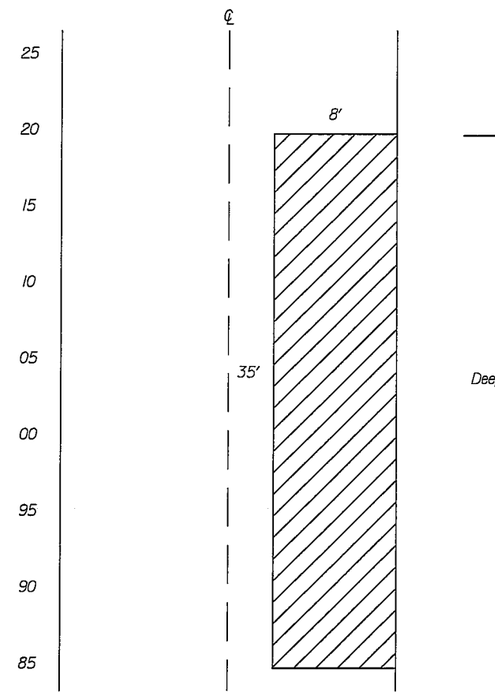

ASPHALT PAVEMENT
FULL DEPTH PATCH, TYPE 2

Note:
All patch work shall be completed prior to milling

See Detail E419-A

U.S. DEPARTMENT OF TRANSPORTATION
FEDERAL HIGHWAY ADMINISTRATION
EASTERN FEDERAL LANDS HIGHWAY DIVISION
STERLING, VIRGINIA

PAVEMENT PATCH LOCATIONS
PARKWAY MAINLINE

SCALE : NO SCALE

Drawing No. 5 of 10

7/10/2008 12:23:43 PM G:\Vro\CT052885\TRAVFINAL_MOD_7\patch_05.dgn

NPS NO.	REG	STATE	PROJECT	SHEET NO.	TOTAL SHEETS
601 / 43918	SE	NC	PRA-BLRI-2P14	118	166

MILE MARKER 365
22+00 TO 22+30

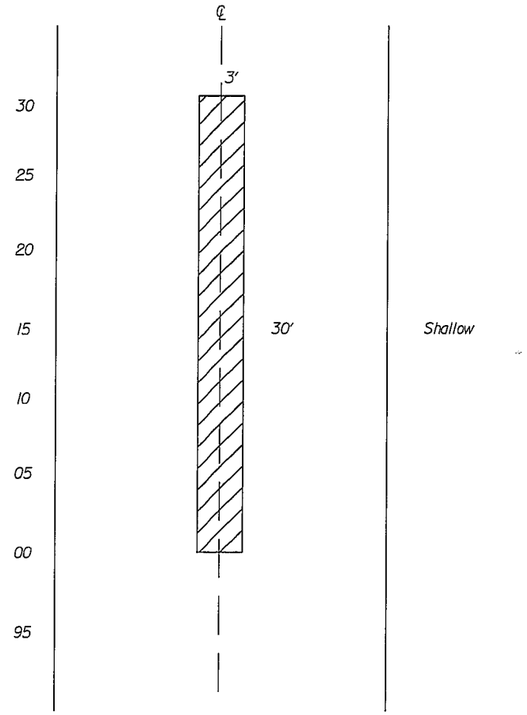

ASPHALT PAVEMENT
SHALLOW DEPTH PATCH, TYPE I

MILE MARKER 365
23+50 TO 23+55

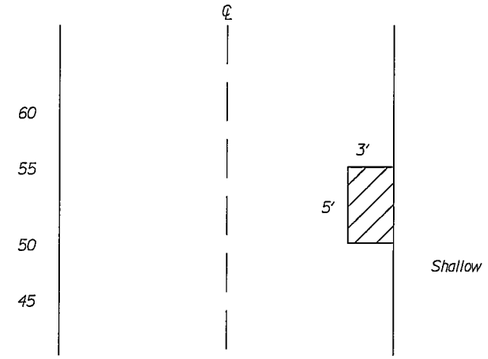

ASPHALT PAVEMENT
SHALLOW DEPTH PATCH, TYPE I

MILE MARKER 365
25+00 TO 25+15

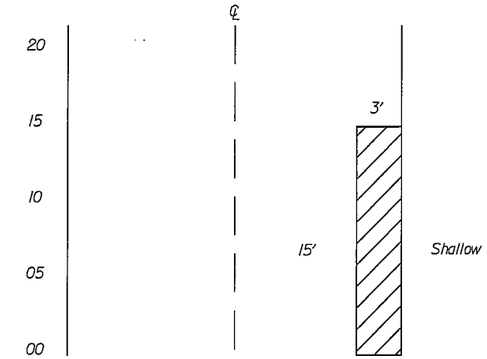

ASPHALT PAVEMENT
SHALLOW DEPTH PATCH, TYPE I

Note:
All patch work shall be completed prior to milling

MILE MARKER 365
50+55 TO 50+60

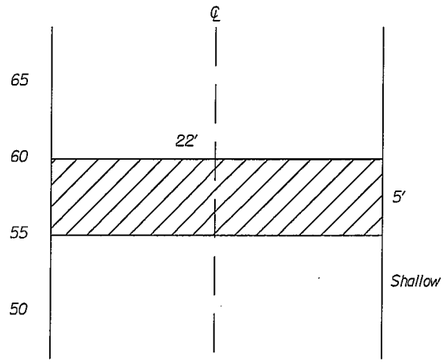

ASPHALT PAVEMENT
SHALLOW DEPTH PATCH, TYPE I

MILE MARKER 366
3+05 TO 3+15

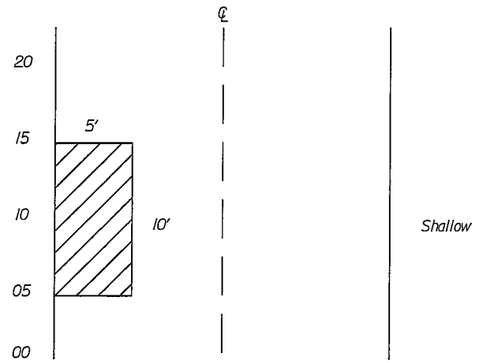

ASPHALT PAVEMENT
SHALLOW DEPTH PATCH, TYPE I

MILE MARKER 366
4+65 TO 4+70

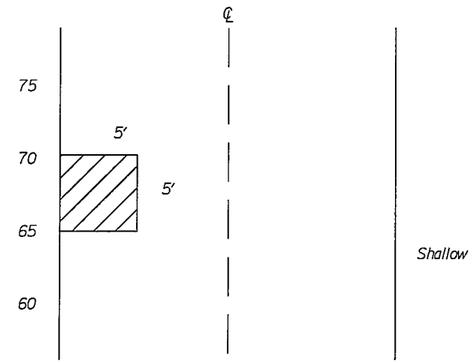

ASPHALT PAVEMENT
SHALLOW DEPTH PATCH, TYPE I

See Detail E419-A

U.S. DEPARTMENT OF TRANSPORTATION
FEDERAL HIGHWAY ADMINISTRATION
EASTERN FEDERAL LANDS HIGHWAY DIVISION
STERLING, VIRGINIA

PAVEMENT PATCH LOCATIONS
PARKWAY MAINLINE

SCALE : NO SCALE

Drawing No. 6 of 10

7/10/2008 12:23:51 PM G:\tra\CT052885\TRA\FINAL_MOD_7\patch_06.dgn

NPS NO.	REG	STATE	PROJECT	SHEET NO.	TOTAL SHEETS
601 / 43918	SE	NC	PRA-BLRI-2P14	119	166

RECONSTRUCTION STARTS AT
MILE MARKER 366 10+00 TO
MILE MARKER 368 20+00

MILE MARKER 368
23+35 TO 23+55

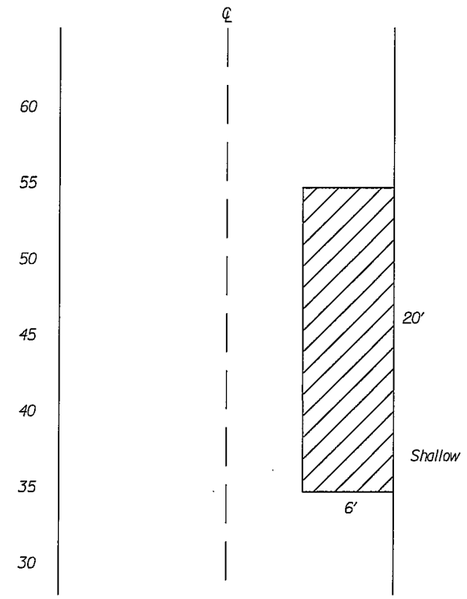

ASPHALT PAVEMENT
SHALLOW DEPTH PATCH, TYPE I

MILE MARKER
368 AROUND 27+00 TO 28+20
NEW PAVEMENT SECTION

MILE MARKER 368
30+75 TO 31+10

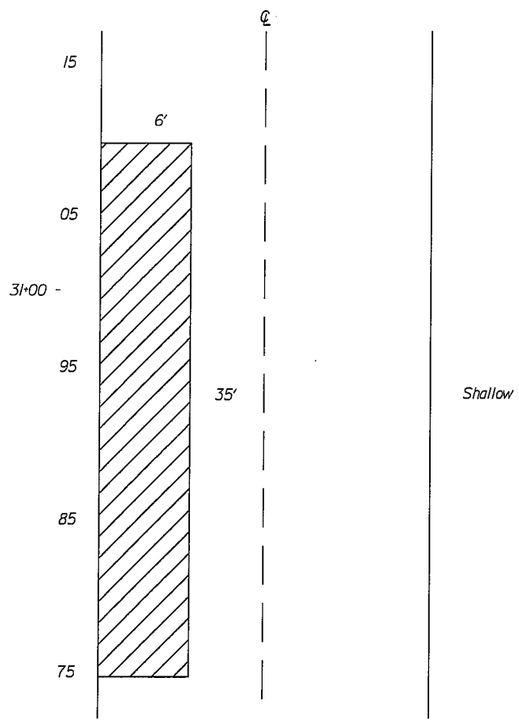

ASPHALT PAVEMENT
SHALLOW DEPTH PATCH, TYPE I

MILE MARKER 368
31+50 TO 31+70

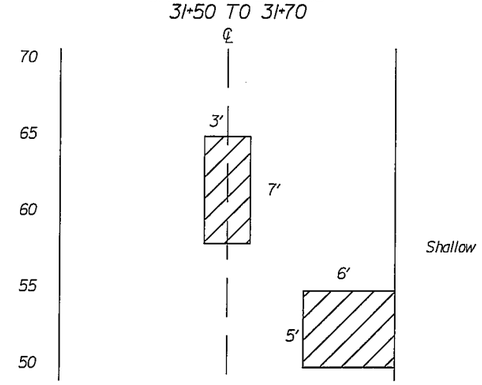

ASPHALT PAVEMENT
SHALLOW DEPTH PATCH, TYPE I

MILE MARKER 368
32+25 TO 33+40

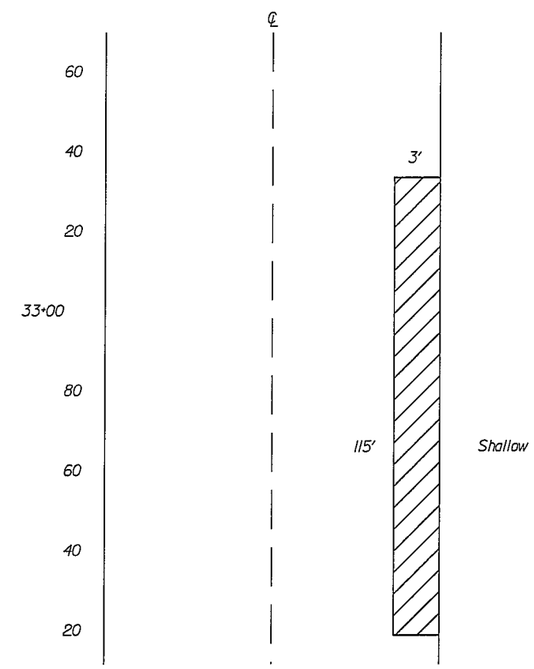

ASPHALT PAVEMENT
SHALLOW DEPTH PATCH, TYPE I

Note:
All patch work shall be completed prior to milling

See Detail E419-A

U.S. DEPARTMENT OF TRANSPORTATION
FEDERAL HIGHWAY ADMINISTRATION
EASTERN FEDERAL LANDS HIGHWAY DIVISION
STERLING, VIRGINIA

PAVEMENT PATCH LOCATIONS
PARKWAY MAINLINE

SCALE : NO SCALE

Drawing No. 7 of 10

7/10/2008 12:23:59 PM G:\tra\CT052885\TRA\FINAL_MOD_7\patch_07.dgn

NPS NO.	REG	STATE	PROJECT	SHEET NO.	TOTAL SHEETS
601 / 43918	SE	NC	PRA-BLRI-2P14	120	166

MILE MARKER 368
35+90 TO 36+00

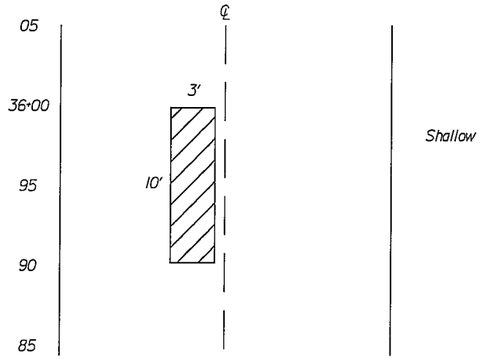

ASPHALT PAVEMENT
SHALLOW DEPTH PATCH,TYPE I

MILE MARKER 368
36+40 TO 36+60

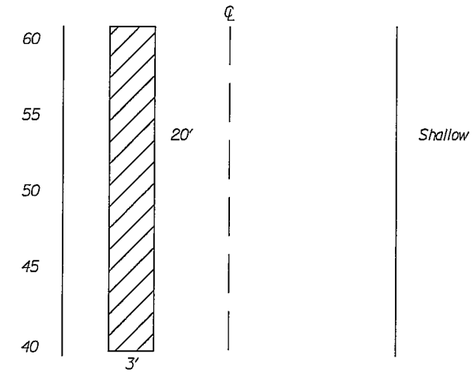

ASPHALT PAVEMENT
SHALLOW DEPTH PATCH,TYPE I

MILE MARKER 368
38+75 TO 38+85

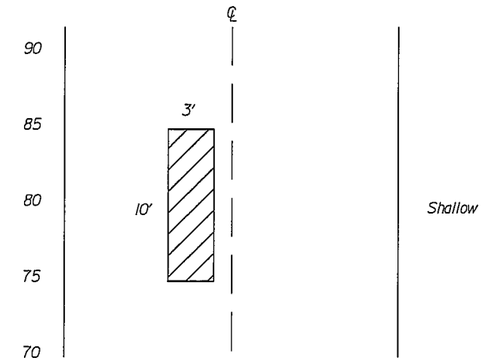

ASPHALT PAVEMENT
SHALLOW DEPTH PATCH,TYPE I

MILE MARKER 369
0+00 TO 0+50

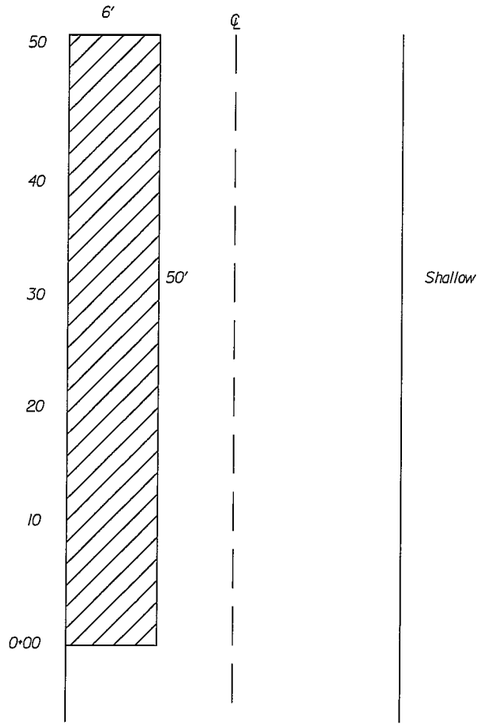

ASPHALT PAVEMENT
SHALLOW DEPTH PATCH,TYPE I

Note:
All patch work shall be completed prior to milling

MILE MARKER 368
39+55 TO 39+70

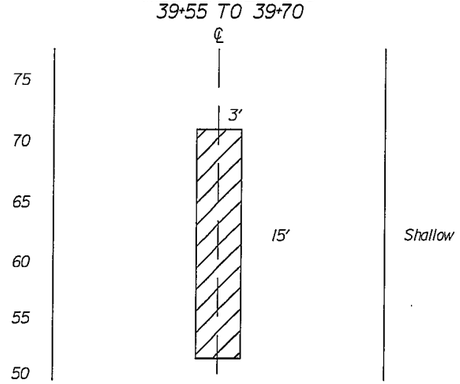

ASPHALT PAVEMENT
SHALLOW DEPTH PATCH,TYPE I

MILE MARKER 369
1+65 TO 2+00

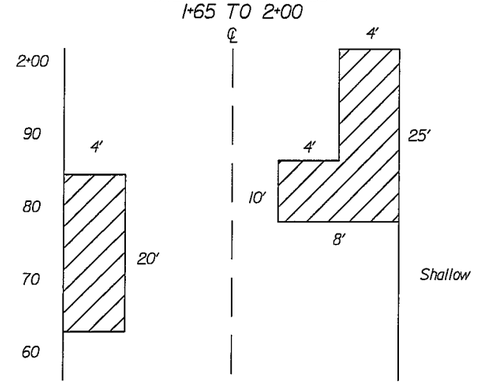

ASPHALT PAVEMENT
SHALLOW DEPTH PATCH,TYPE I

See Detail E419-A

U.S. DEPARTMENT OF TRANSPORTATION
FEDERAL HIGHWAY ADMINISTRATION
EASTERN FEDERAL LANDS HIGHWAY DIVISION
STERLING, VIRGINIA

PAVEMENT PATCH LOCATIONS

PARKWAY MAINLINE

SCALE : NO SCALE

Drawing No. 8 of 10

7/10/2008 12:24:07 PM G:\ra\CT052885\TRAFINAL_MOD_7\patch_08.dgn

NPS NO.	REG	STATE	PROJECT	SHEET NO.	TOTAL SHEETS
601 43918	SE	NC	PRA-BLRI-2P14	121	166

MILE MARKER 369
2+85 TO 2+95

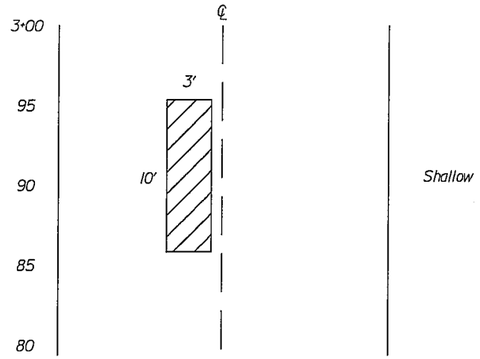

ASPHALT PAVEMENT
SHALLOW DEPTH PATCH, TYPE I

MILE MARKER 369
4+50 TO 4+80

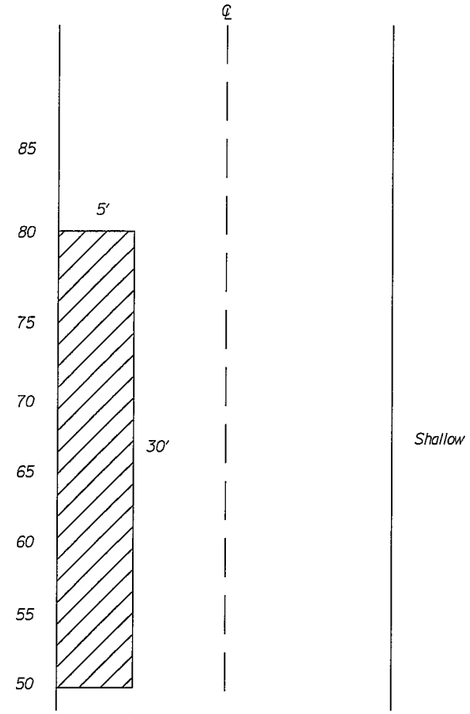

ASPHALT PAVEMENT
SHALLOW DEPTH PATCH, TYPE I

MILE MARKER 369
5+82 TO 5+92

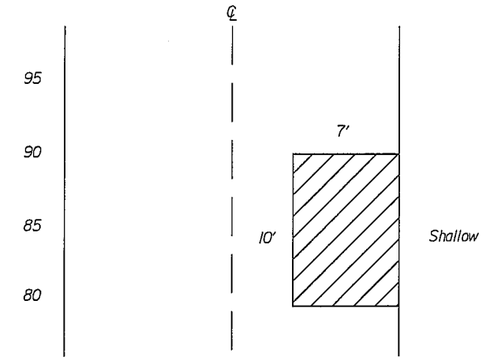

ASPHALT PAVEMENT
SHALLOW DEPTH PATCH, TYPE I

Note:
All patch work shall be completed prior to milling

MILE MARKER 369
8+90 TO 9+00

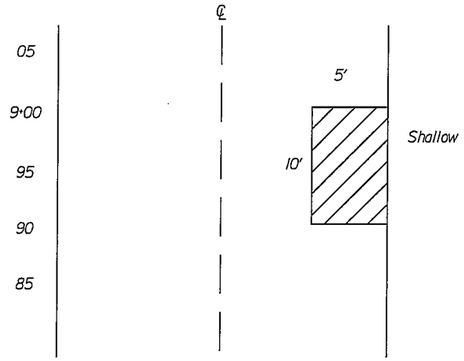

ASPHALT PAVEMENT
SHALLOW DEPTH PATCH, TYPE I

MILE MARKER 369
16+80 TO 17+00

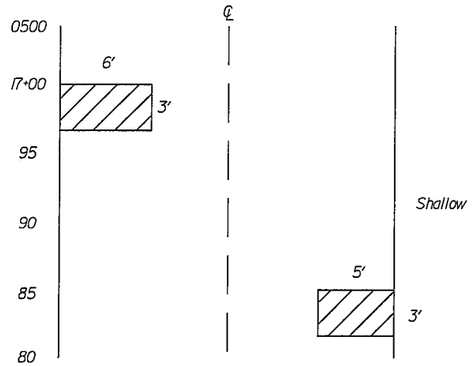

ASPHALT PAVEMENT
SHALLOW DEPTH PATCH, TYPE I

MILE MARKER 369
23+45 TO 23+60

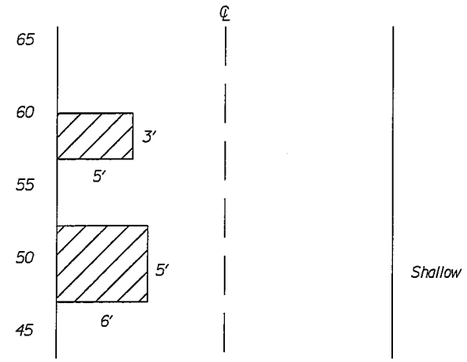

ASPHALT PAVEMENT
SHALLOW DEPTH PATCH, TYPE I

See Detail E419-A

U.S. DEPARTMENT OF TRANSPORTATION
FEDERAL HIGHWAY ADMINISTRATION
EASTERN FEDERAL LANDS HIGHWAY DIVISION
STERLING, VIRGINIA

PAVEMENT PATCH LOCATIONS
PARKWAY MAINLINE

SCALE : NO SCALE

Drawing No. 9 of 10

7/10/2008 12:24:16 PM G:\tra\CT05288S\TRA\FINAL_MOD_7\patch_09.dgn

NPS NO.	REG	STATE	PROJECT	SHEET NO.	TOTAL SHEETS
601 / 43918	SE	NC	PRA-BLRI-2P14	122	166

MILE MARKER 369
27+40 TO 27+55

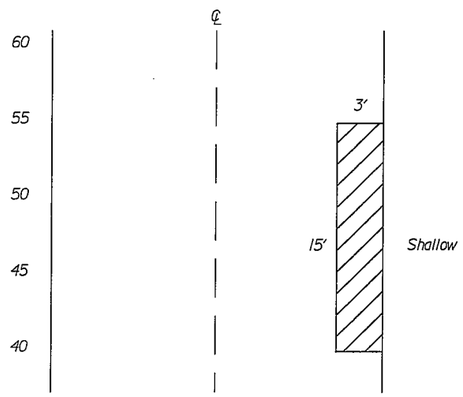

ASPHALT PAVEMENT
SHALLOW DEPTH PATCH,TYPE I

MILE MARKER 369
44+50 TO 44+60

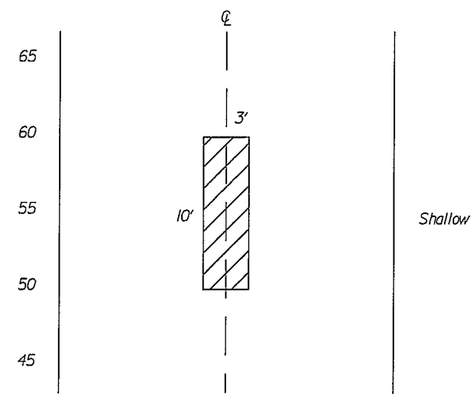

ASPHALT PAVEMENT
SHALLOW DEPTH PATCH,TYPE I

MILE MARKER 369
49+77 TO 49+82

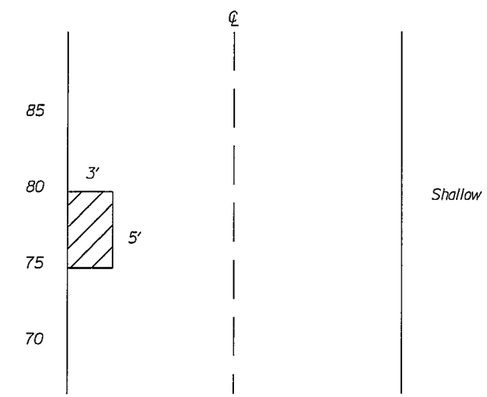

ASPHALT PAVEMENT
SHALLOW DEPTH PATCH,TYPE I

FULL DEPTH RECLAMATION
FROM MILE MARKER
370 2+00 TO MILE
MARKER 375 4+57

Note:
All patch work shall be completed prior to milling.

See Detail E419-A

U.S. DEPARTMENT OF TRANSPORTATION
FEDERAL HIGHWAY ADMINISTRATION
EASTERN FEDERAL LANDS HIGHWAY DIVISION
STERLING, VIRGINIA

PAVEMENT PATCH LOCATIONS

PARKWAY MAINLINE

SCALE : NO SCALE

Drawing No. 10 of 10

7/10/2008 12:24:25 PM G:\tra\CT052885\TRA\FINAL_MOD_7\patch_10.dgn

NPS NO.	REG	STATE	PROJECT	SHEET NO.	TOTAL SHEETS
601 / 43918	SE	NC	PRA-BLRI-2P14	123	166

Notes:
1. Complete all joints in the reconstructed wall to be mortared and raked to give the appearance of a dry layed wall, as directed by the CO.
2. Place a layer of mortar between the top of the concrete footing and the first layer of stones.
3. Cut all capstone head joints flush with the top of stone as directed by the CO.

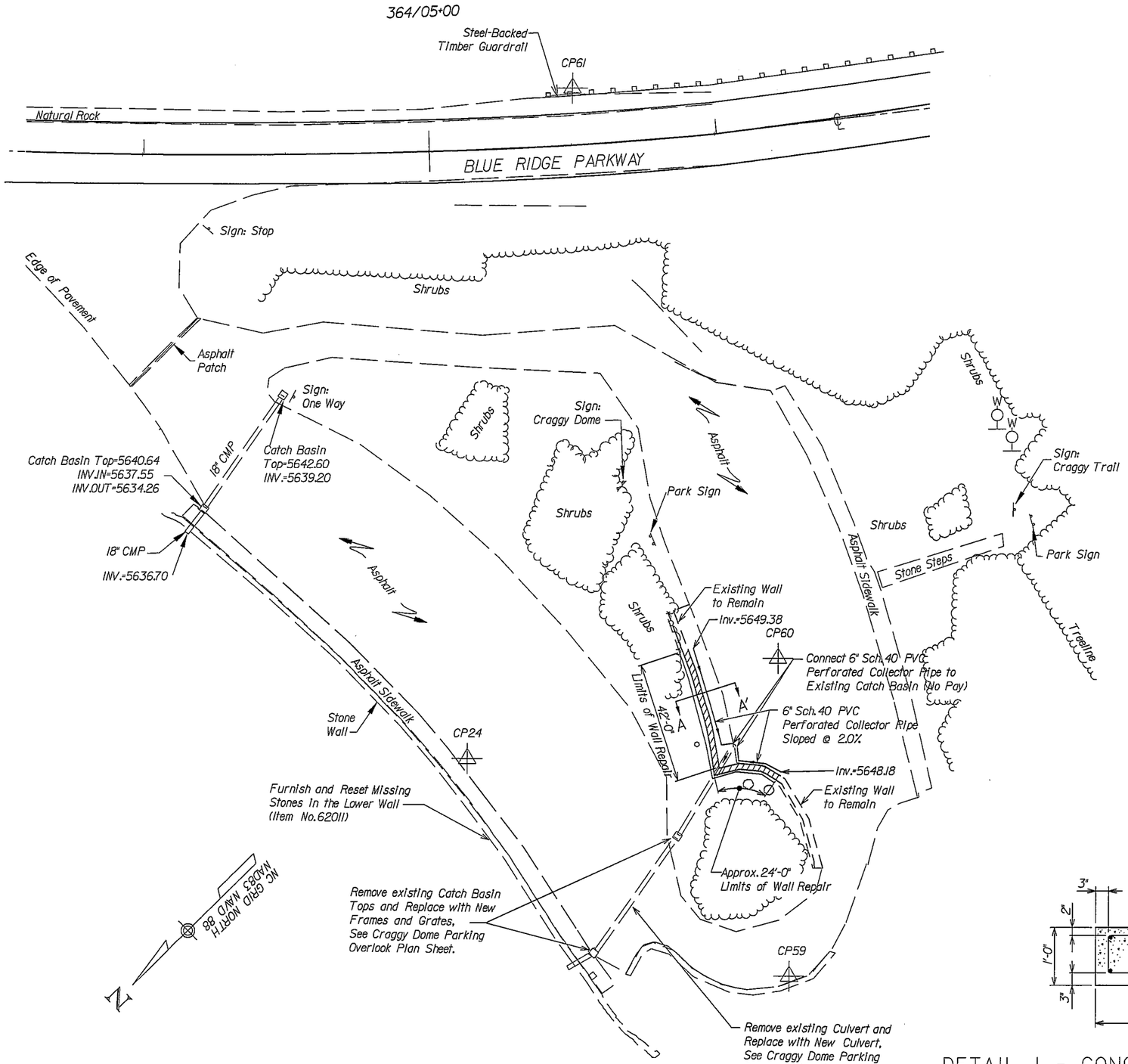

PLAN

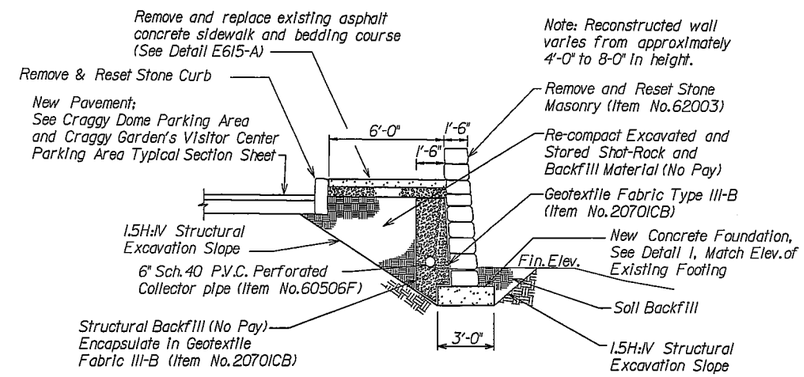

SECTION A-A'

N.T.S.

Note:
The contractor shall replicate the original wall by:
A. Numbering the stones to be removed,
B. Developing a detailed sketch of the existing stone layout,
C. Carefully removing, cleaning and storing the stones,
D. Reset stones in the wall in the same order they were removed to the satisfaction of the CO (See Section 620).

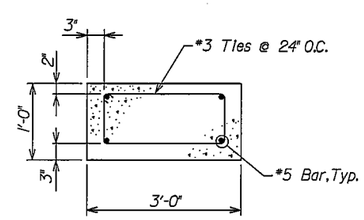

DETAIL 1 - CONCRETE FOUNDATION

SCALE: 1"=1'-0"

(Item No. 60101 Concrete)

(Include cost of steel reinforcement in cost for concrete)

U.S. DEPARTMENT OF TRANSPORTATION
FEDERAL HIGHWAY ADMINISTRATION
EASTERN FEDERAL LANDS HIGHWAY DIVISION
STERLING, VIRGINIA

CRAGGY DOME

RETAINING WALL REPAIR

PLAN AND SECTION

7/10/2008 1:47:13 PM G:\Proj\CT052885\WWW\CRAGGYDOME\DGN\wall-repair-1.dgn

NPS NO.	REG	STATE	PROJECT	SHEET NO.	TOTAL SHEETS
601 / 43918	SE	NC	PRA-BLRI-2P14	124	166

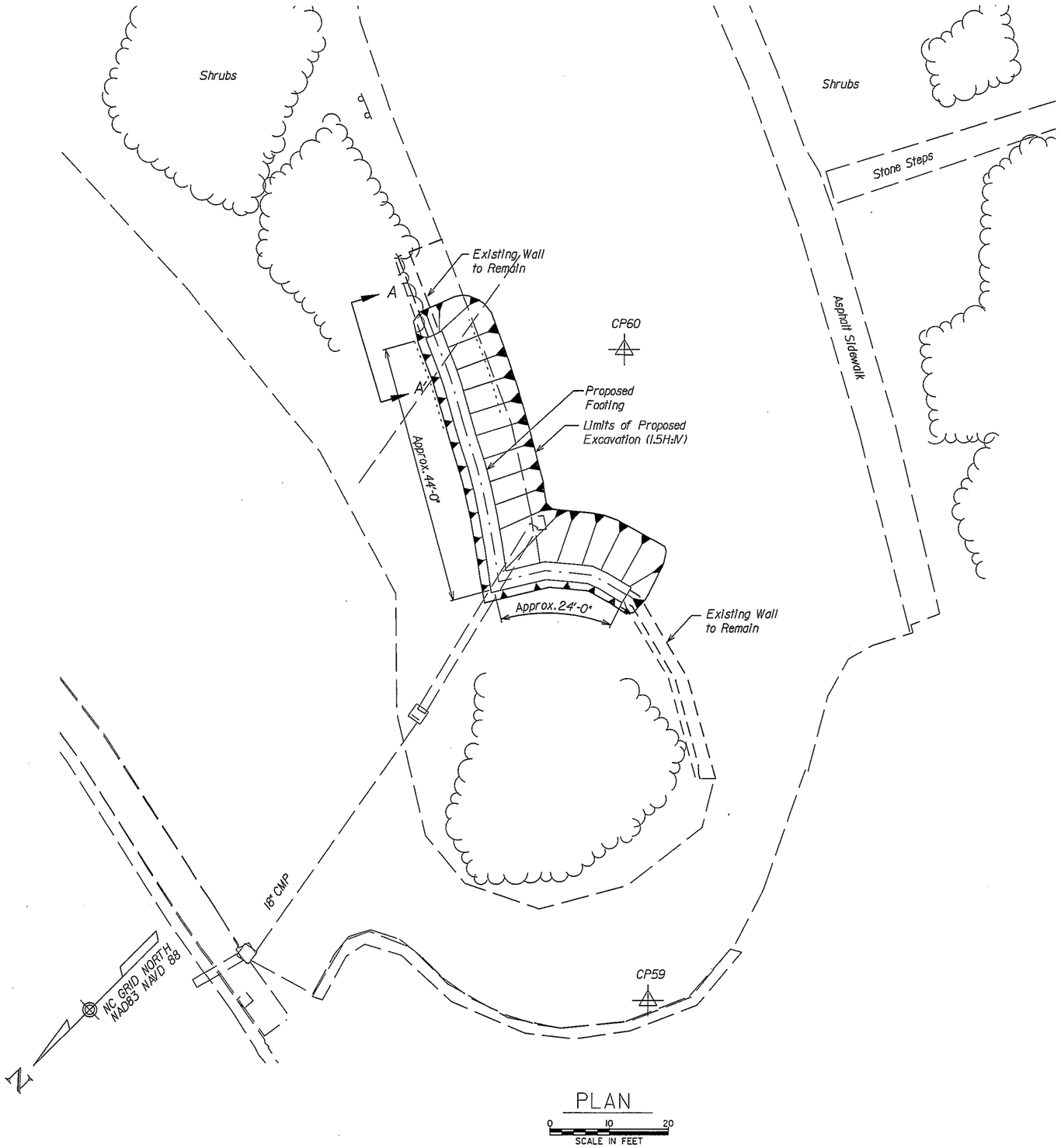

PLAN

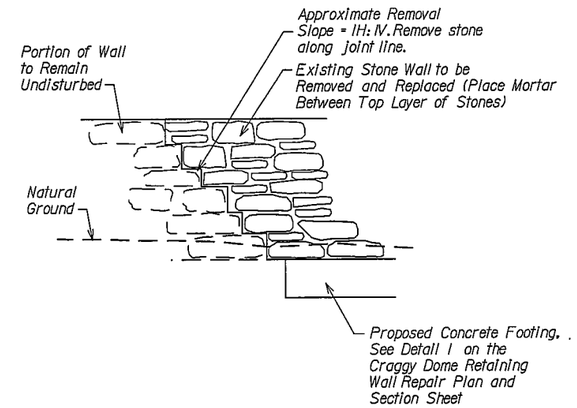

SECTION A-A'

N.T.S.

U.S. DEPARTMENT OF TRANSPORTATION
FEDERAL HIGHWAY ADMINISTRATION
EASTERN FEDERAL LANDS HIGHWAY DIVISION
STERLING, VIRGINIA

CRAGGY DOME

RETAINING WALL REPAIR

EXCAVATION PLAN AND DETAILS

7/10/2008 1:47:38 PM G:\fra\CT052885\WWW\CRAGGYDOME\DGN\wall-repair-2.dgn

NPS NO.	REG	STATE	PROJECT	SHEET NO.	TOTAL SHEETS
601 / 43918	SE	NC	PRA-BLRI-2P14	125	166

Photo 1 - View of Upper Parking Lot Retaining Wall

Photo 2 - View of Upper Retaining Wall Corner

Photo 3 - View of Upper Retaining Wall Corner

Photo 4 - View of Upper Retaining Wall Corner from Upper Parking Area

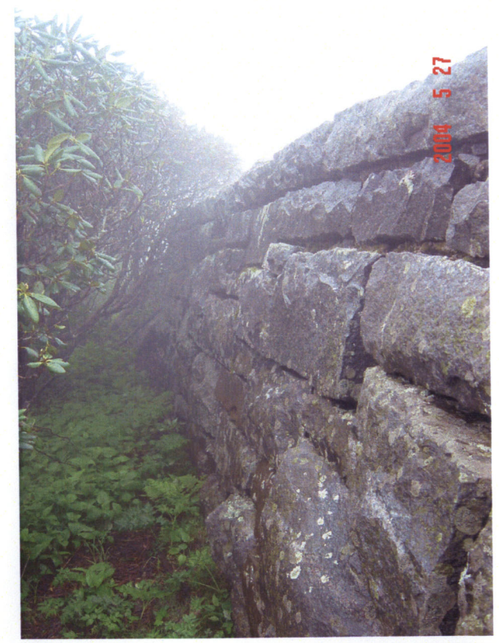

Photo 5 - View of Upper Retaining Wall

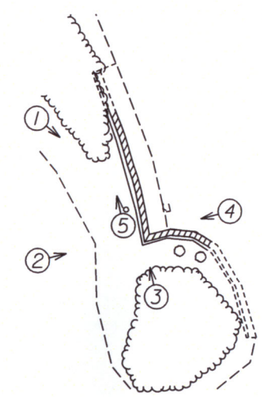

Photo Key Map

U.S. DEPARTMENT OF TRANSPORTATION
FEDERAL HIGHWAY ADMINISTRATION
EASTERN FEDERAL LANDS HIGHWAY DIVISION
STERLING, VIRGINIA

CRAGGY DOME
RETAINING WALL REPAIR
PROJECT PHOTOGRAPHS

7/25/2008 5:33:35 PM G:\traCT052885\WWW\CRAGGYDOME\DGN\wall-repair-3.dgn

NPS NO.	REG	STATE	PROJECT	SHEET NO.	TOTAL SHEETS
601 / 43918	SE	NC	PRA-BLRI-2P14	126	166

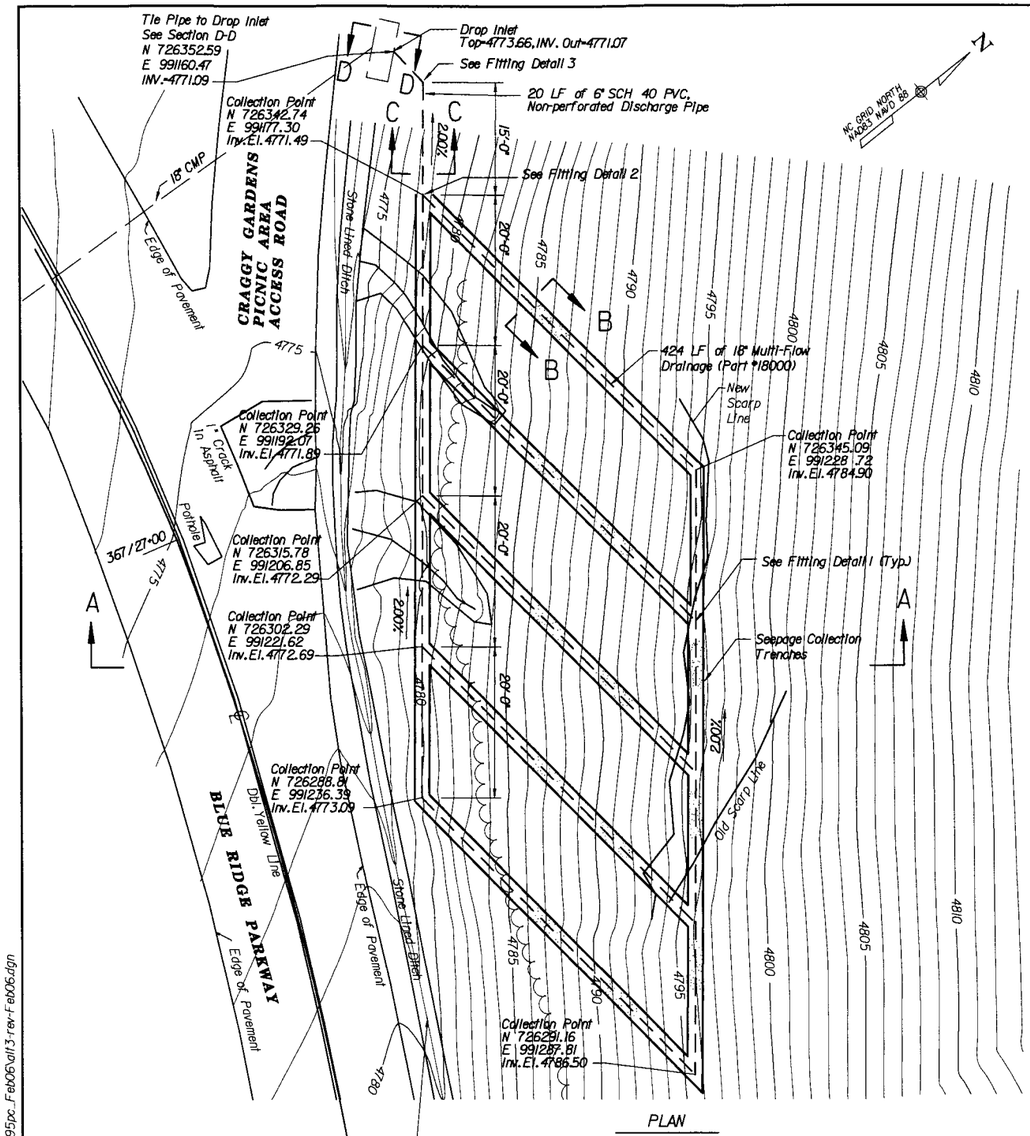

PLAN

* See Craggy Gardens Picnic Area Access Road for control point locations and descriptions.

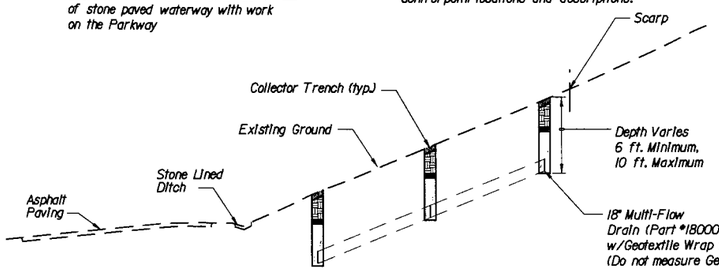

TYPICAL SECTION A-A

Not to Scale

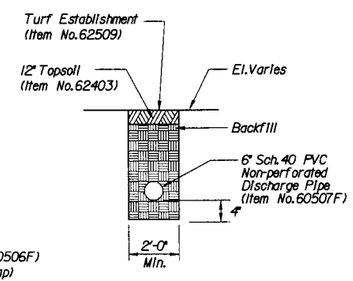

TYPICAL OUTLET PIPE TRENCH DETAIL

(SECTION C-C)

Not to Scale

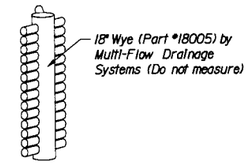

FITTING DETAIL 1

Not to Scale

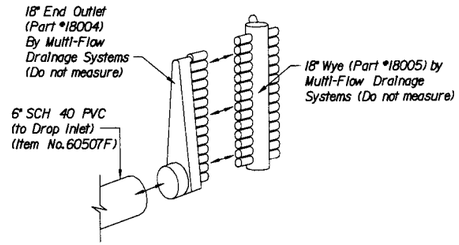

FITTING DETAIL 2

Not to Scale

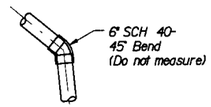

FITTING DETAIL 3

Not to Scale

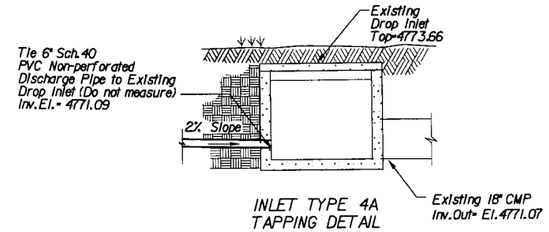

INLET TYPE 4A TAPPING DETAIL (SECTION D-D)

Not to Scale

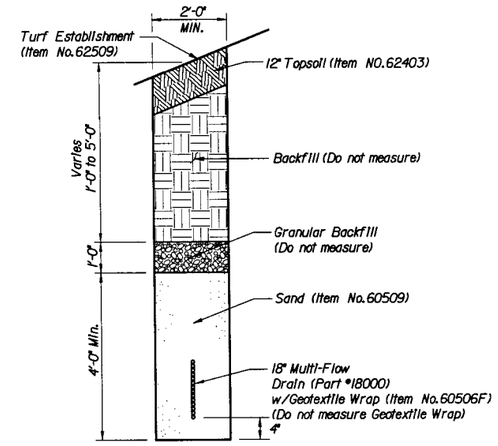

TYPICAL COLLECTOR TRENCH DETAIL

(SECTION B-B)

Not to Scale

Note:

The contractor shall use the following construction sequence:

1. Place silt fence and inlet protection at construction area (see Erosion and Sediment Control Narrative sheet).
2. Contact National Park Service or Blue Ridge Parkway Resource Division personnel who may harvest existing vegetation prior to beginning construction.
3. Clear and grub area that will be disturbed during Multi-flow drainage system construction.The cleared area includes the width of the trench as well as a work area 10 feet in width along the length of the proposed drain. Remove the top 12 inches of soil from the cleared areas. Conserve the top 12 inches of soil and stockpile it separately from the excavated trench soil.
4. Revegetate the cleared and grubbed area with appropriate turf establishmsent (See section 625).
5. Construct the 6" PVC disharge pipe and the 80-feet of collector trench with Multi-flow Drainage System located on the most downhill portion of the site. A maximum of 25 feet of trench shall be open at any given time. Fill the trench with sand, backfill, and topsoil before excavation is begun on the next 25 feet of trench.
6. Construct the collector drains that run uphill at a 45-degree angle from the bottom collector. One trench shall be excavated and the drain completed before opening the next collector trench.
7. Construct the top collector drain with a maximum of 25 feet of trench open at any given time. Fill the trench with sand, backfill, and topsoil before the next 25 feet of trench is excavated.
8. Place 12 inches of topsoil on areas that were previously cleared.
9. Establish turf on the disturbed areas. National Park Service or Blue Ridge Parkway Resource Division personnel may plant appropriate supplemental vegetation.
10. Remove silt fence and inlet protection after turf has been established.

Note: It is recommended that construction occur during the driest season possible. It is acceptable to construct this drainage system when the ground surface is frozen.

U.S. DEPARTMENT OF TRANSPORTATION
FEDERAL HIGHWAY ADMINISTRATION
EASTERN FEDERAL LANDS HIGHWAY DIVISION
STERLING, VIRGINIA

CRAGGY GARDEN'S
PICNIC ACCESS AREA
SLIDE REPAIR
SEEPAGE COLLECTOR TRENCHES

7/25/2008 5:13:30 PM G:\tra\CT052885\WWW\SeepageCollection_95pc_Feb06\all3-rev-Feb06.dgn

NPS. NO.	REG	STATE	PROJECT	SHEET NO.	TOTAL SHEETS
601 43918	S.E.	NC	PRA-BLRI-2P14	127	166

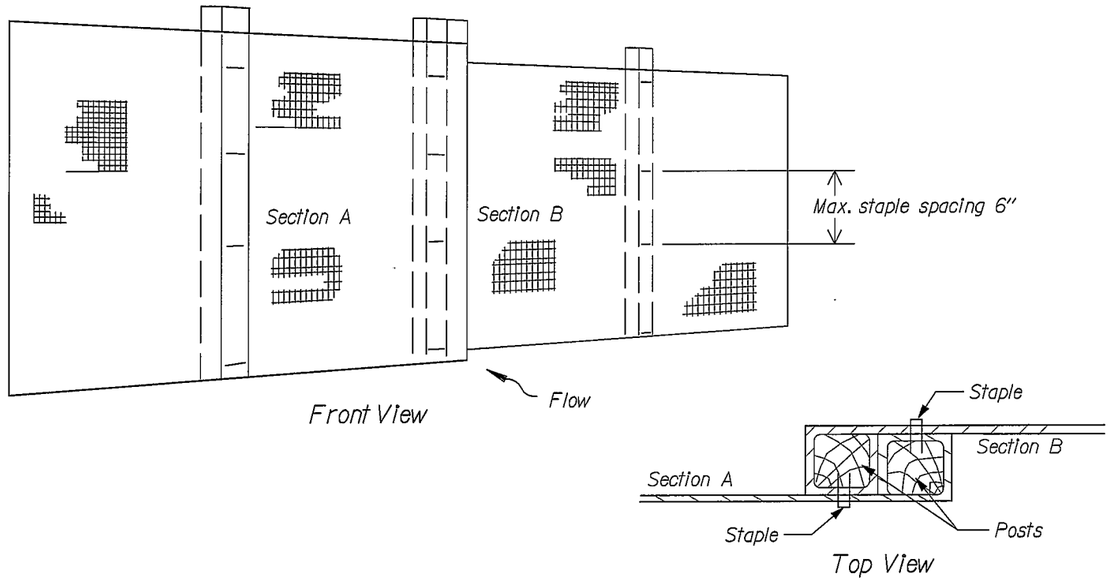

JOINING TWO ADJACENT SILT FENCE SECTIONS

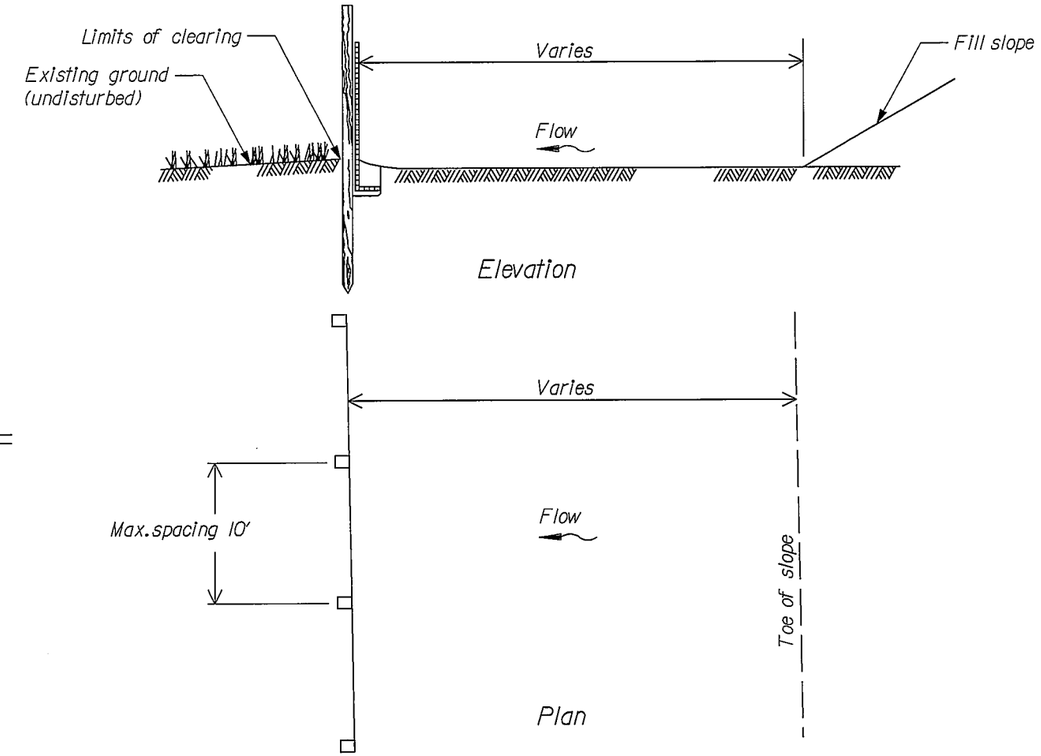

SILT FENCE INSTALLATION AT TOE OF FILL

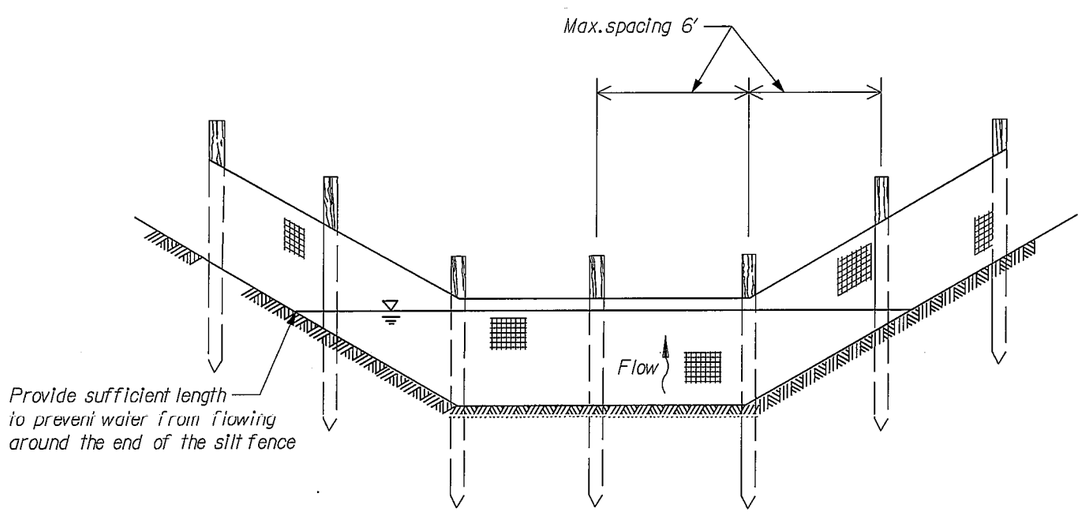

SILT FENCE INSTALLATION IN A DRAINAGE DITCH

Note: Use drainage ditch installation for low flow conditions only when specified on Erosion Control Plan.

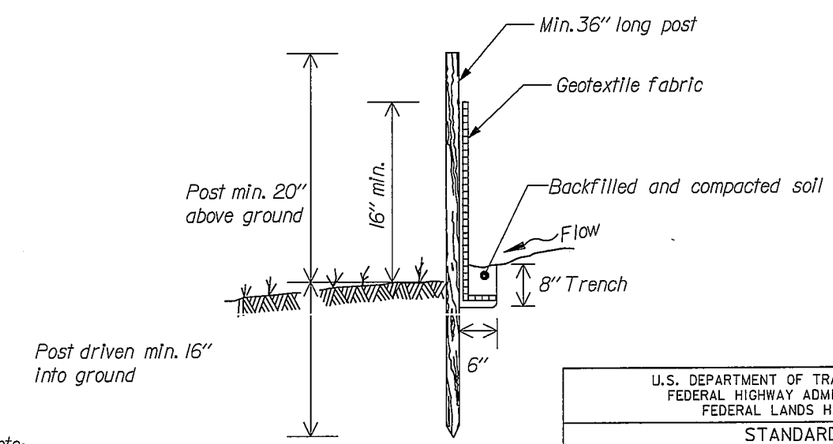

(not to scale)

Note:
Alternate pre-assembled silt fence options will be allowed as long as specified minimums are satisfied. Follow manufacturer's information for installation procedures.

U.S. DEPARTMENT OF TRANSPORTATION
FEDERAL HIGHWAY ADMINISTRATION
FEDERAL LANDS HIGHWAY

STANDARD

SILT FENCE

STANDARD APPROVED FOR USE --/----

REVISED:

STANDARD 157-1

7/11/2008 10:59:23 AM G:\Vra\CT052865\TRA\FINAL_MOD_7\dt157x02.dgn

NPS. NO.	REG	STATE	PROJECT	SHEET NO.	TOTAL SHEETS
601 / 43918	S.E.	NC	PRA-BLRI-2P14	128	166

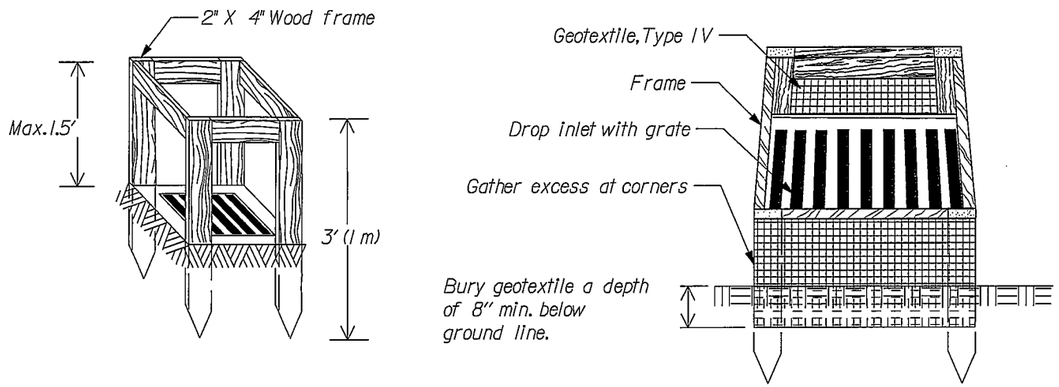

SILT FENCE DROP INLET PROTECTION (TYPE A)

Note: Use Type A inlet protection in sump locations only.

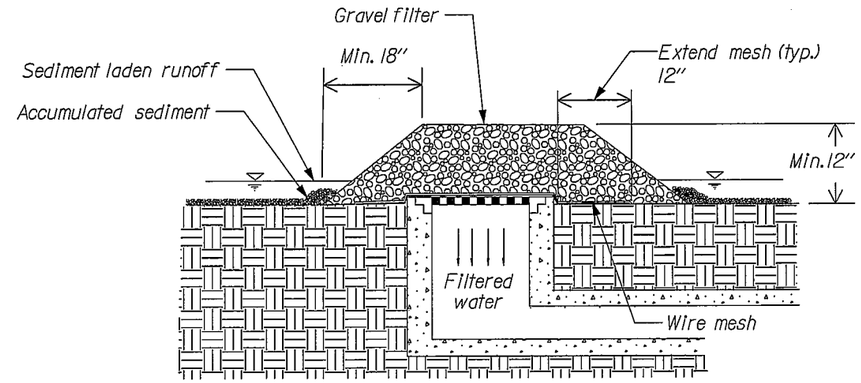

GRAVEL AND WIRE MESH DROP INLET PROTECTION (TYPE B)

Note: Use Type B inlet protection only in sump locations where heavy concentrated flows are not expected. Do not use where ponding around the structure might cause inconvenience or damage.

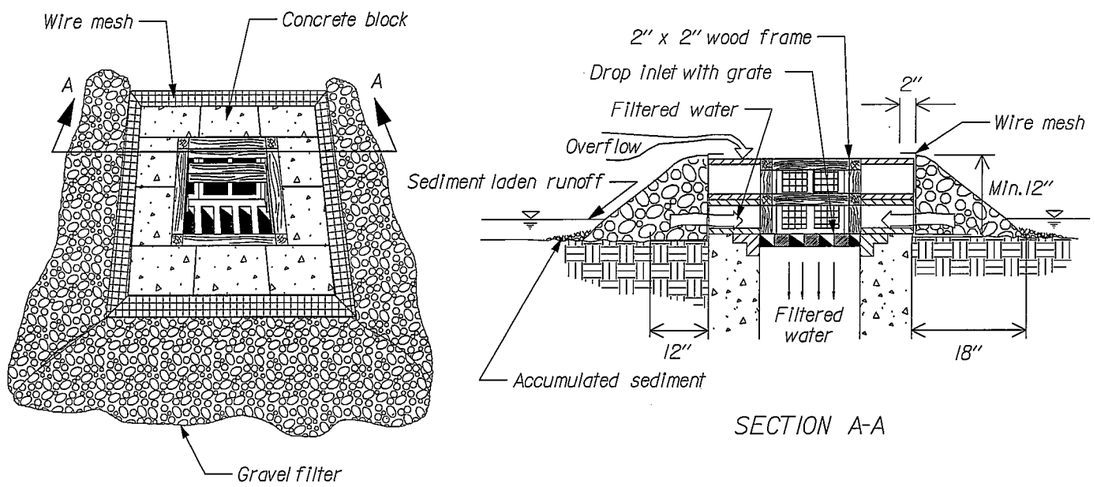

SECTION A-A

BLOCK AND GRAVEL DROP INLET PROTECTION (TYPE C)

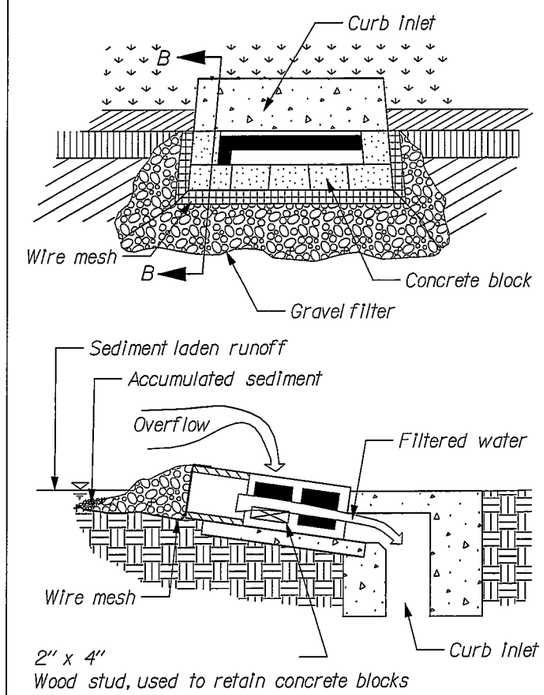

SECTION B-B

CURB INLET PROTECTION, BLOCK AND GRAVEL (TYPE D)

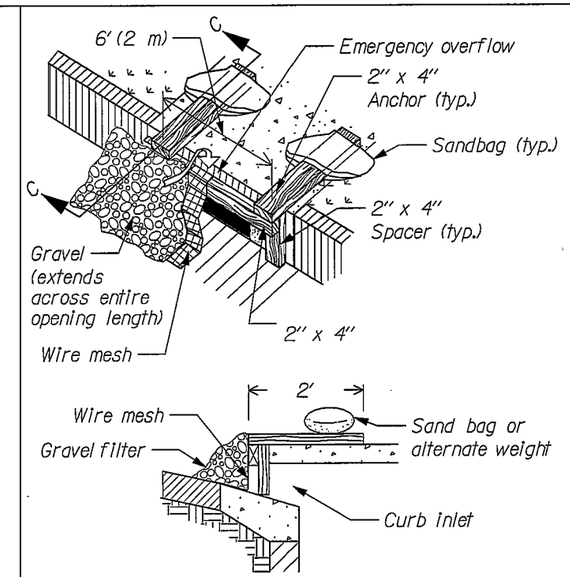

SECTION C-C

CURB INLET PROTECTION, WOODEN WEIR (TYPE E)

General Notes:

1. For gravel filters use 2" - 3" diameter coarse aggregate.
2. Use wire mesh with ½" x ½" openings.

U.S. DEPARTMENT OF TRANSPORTATION
FEDERAL HIGHWAY ADMINISTRATION
EASTERN FEDERAL LANDS HIGHWAY DIVISION

STANDARD

TEMPORARY INLET PROTECTION

(not to scale)

STANDARD APPROVED FOR USE

REVISED:

STANDARD 157-2

7/10/2008 1:40:21 PM G:\Proj\CT052885\TRAFFINAL_MOD_7\dt157x03.dgn

NPS. NO.	REG	STATE	PROJECT	SHEET NO.	TOTAL SHEETS
601 / 43918	S.E.	NC	PRA-BLRI-2P14	129	166

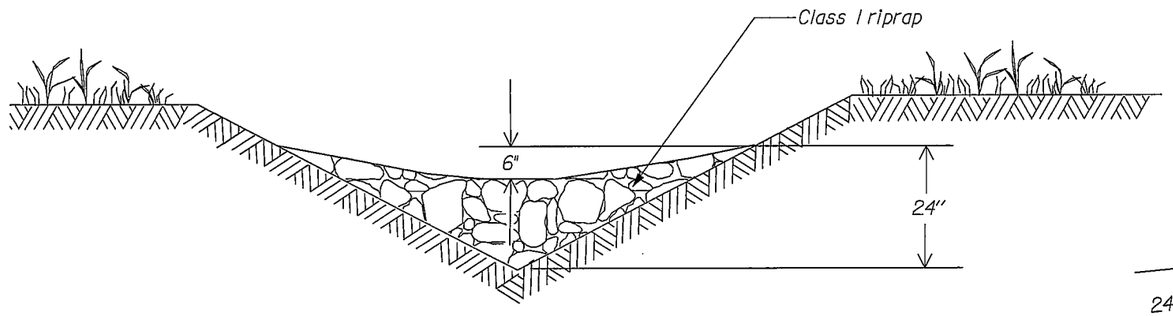

CROSS SECTION
V DITCH

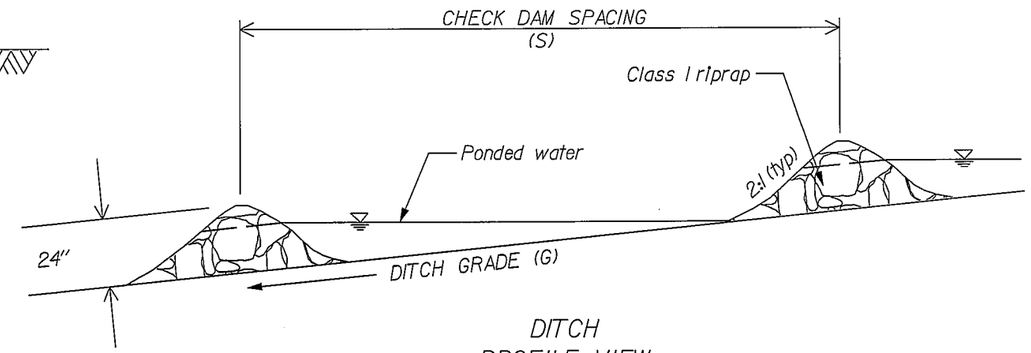

DITCH
PROFILE VIEW

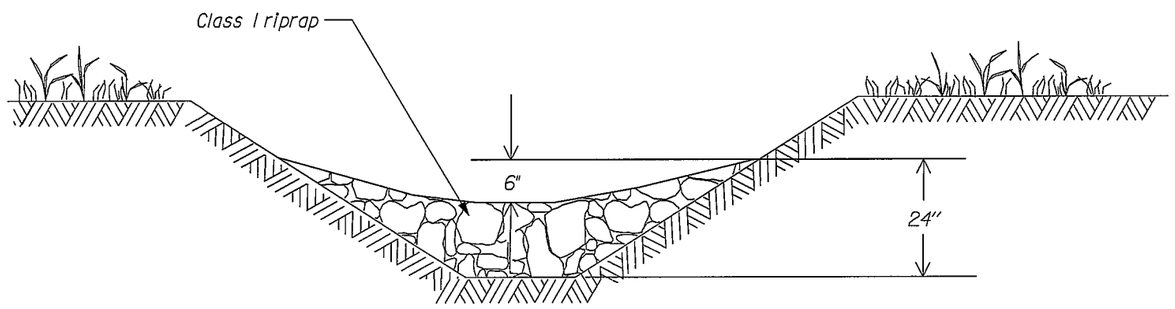

CROSS SECTION
TRAPEZOIDAL DITCH

DITCH GRADE (G) *	CHECK DAM SPACING(S)
2%	75 ft
3%	50 ft
4%	40 ft
5%	30 ft
6%	25 ft

* do not use Check Dams below 2% or above 6% ditch grades

(not to scale)

U.S. DEPARTMENT OF TRANSPORTATION
FEDERAL HIGHWAY ADMINISTRATION
EASTERN FEDERAL LANDS HIGHWAY DIVISION

STANDARD

CHECK DAM

STANDARD APPROVED FOR USE

REVISED:

STANDARD
157-6

7/10/2008 1:40:10 PM G:\tra\CT052885\TRA\FINAL_MOD_7\dh15Tx06.dgn

NPS. NO.	REG	STATE	PROJECT	SHEET NO.	TOTAL SHEETS
601 / 43918	S.E.	NC	PRA-BLRI-2P14	130	166

SLOPE DRAINS

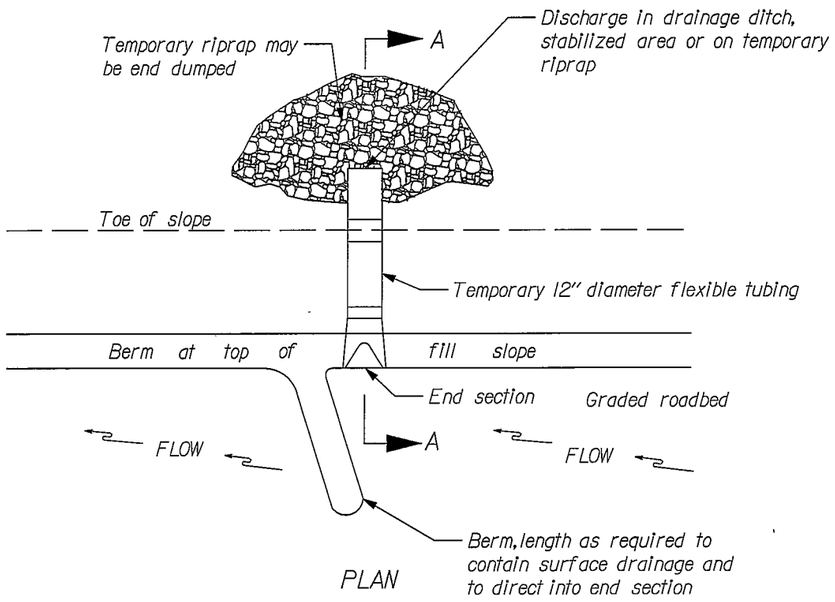

PLAN

PLASTIC LINED WATERWAY

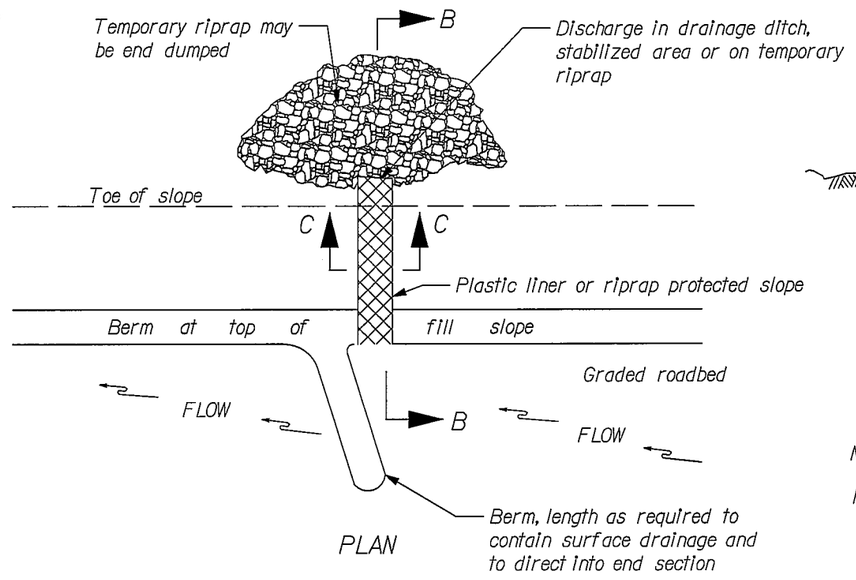

PLAN

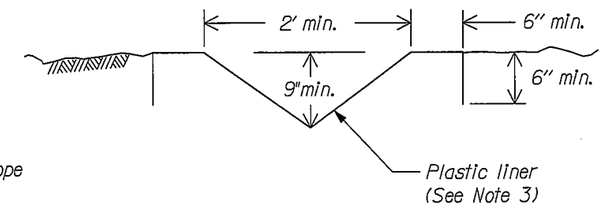

SECTION C-C

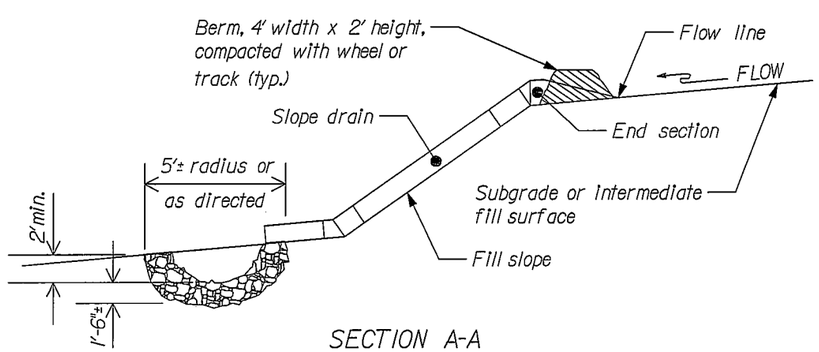

SECTION A-A

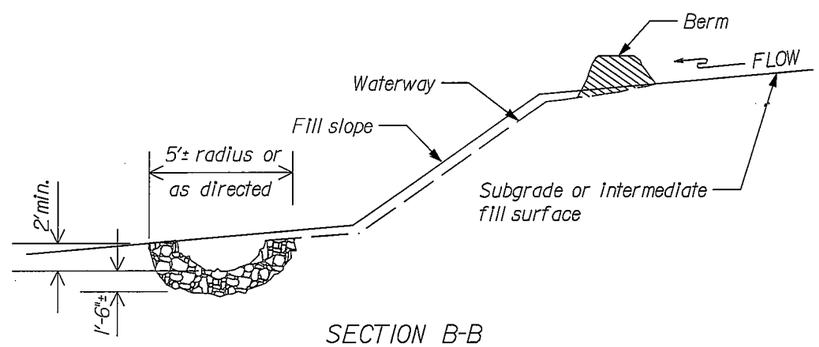

SECTION B-B

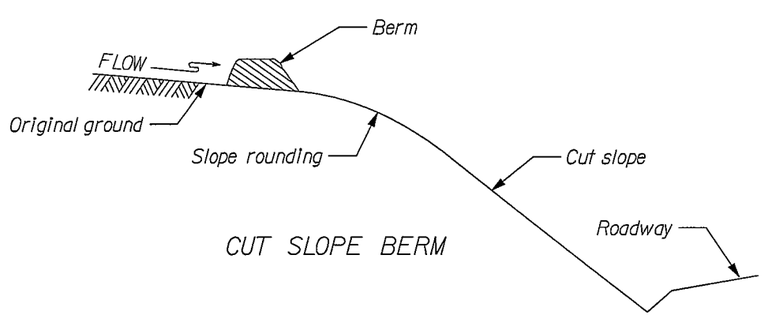

CUT SLOPE BERM

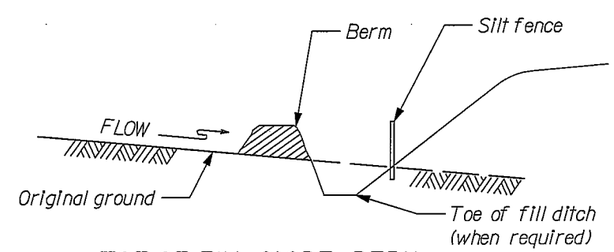

TOE-OF-FILL SLOPE BERM

Notes:

1. Use temporary slope drains (berms, drains, and riprap) as the embankment is constructed. Use spacings as shown on the Erosion Control Plans or as designated by the CO. Place all slope drains at the end of each work shift. Use slope drains until the slopes are permanently stabilized.
2. Construct temporary berms at the top of all erodible cut slopes as shown on the Erosion Control Plans or as designated by the CO. Use check dams to reduce the runoff velocity when existing grades are steep.
3. Do not use transverse or longitudinal joints in plastic liner. Plastic liner is not required for rock embankments.
4. Use toe-of-fill slope berms to divert offsite runoff away from disturbed areas.
5. Seed and mulch all cut slope berms and toe-of-fill berms immediately after berm construction.
6. Use Class 2 temporary riprap.

(not to scale)

U.S. DEPARTMENT OF TRANSPORTATION
FEDERAL HIGHWAY ADMINISTRATION
EASTERN FEDERAL LANDS HIGHWAY DIVISION

STANDARD

TEMPORARY EROSION CONTROL BERMS, SLOPE DRAINS AND LINED WATERWAYS

STANDARD APPROVED FOR USE

REVISED:

STANDARD 157-7

7/10/2008 1:40:57 PM G:\tra\CT052885\TRA\FINAL_MOD_7\dt157x07.dgn

NPS NO.	REG	STATE	PROJECT	SHEET NO.	TOTAL SHEETS
601 / 43918	SE	NC	PRA-BLRI-2P14	131	166

DEPTH (D)	
Riprap Class	Depth (d)-(in)
I	12
II	18
III	24
IV	30
V	42
VI	48

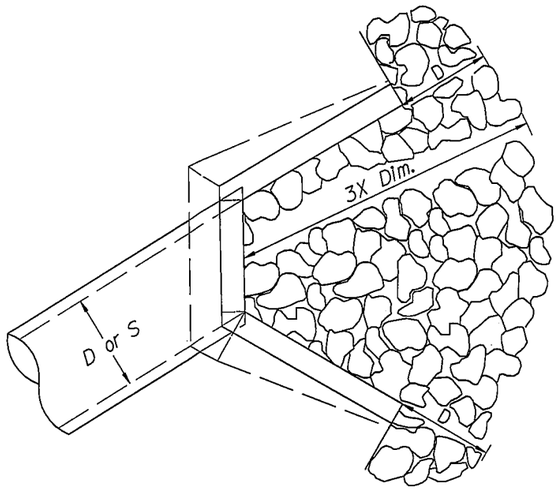

PLAN

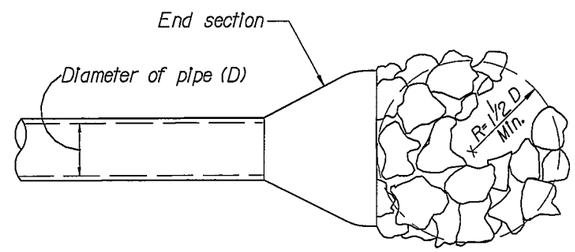

PLAN

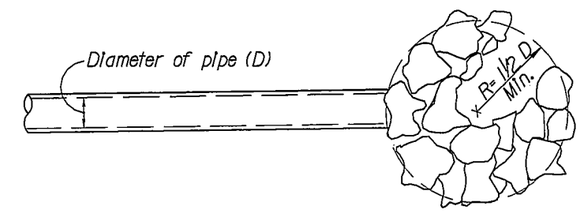

PLAN

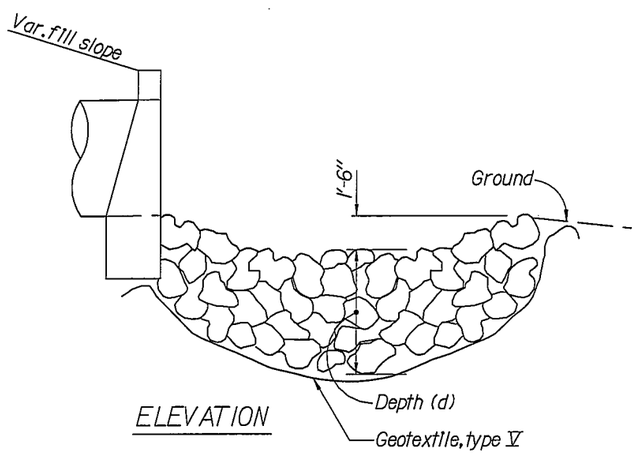

ELEVATION

CULVERT WITH HEADWALL

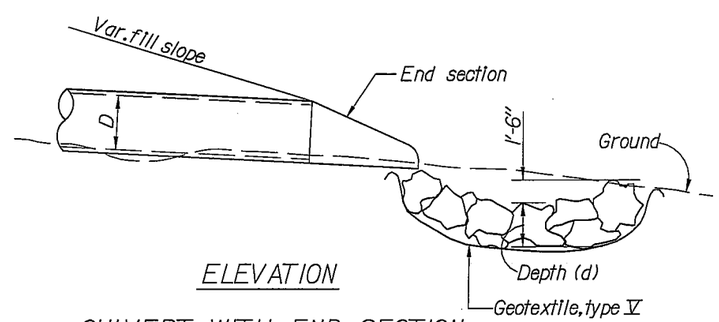

ELEVATION

CULVERT WITH END SECTION

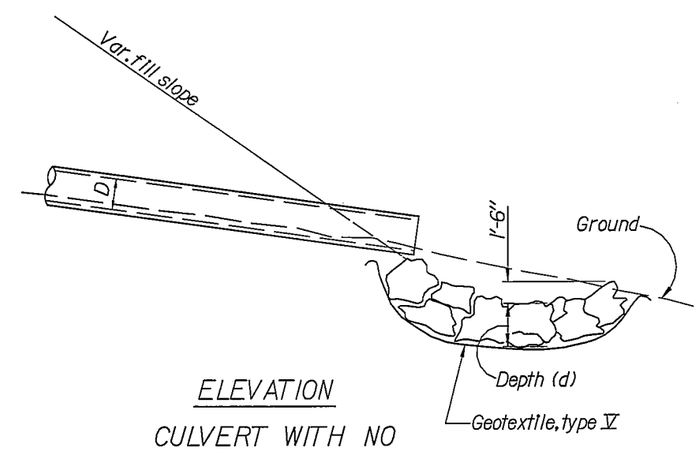

ELEVATION

CULVERT WITH NO END TREATMENT

NOT TO SCALE

NOTE:

For arch or elliptical pipes, use equivalent diameter for (D) dimension

U.S. DEPARTMENT OF TRANSPORTATION
FEDERAL HIGHWAY ADMINISTRATION
EASTERN FEDERAL LANDS HIGHWAY DIVISION

DETAIL
LOOSE RIPRAP
AT CULVERT

DETAIL APPROVED FOR USE

REVISED:

DETAIL
E251-1

7/10/2008 1:41:14 PM G:\Vro\CT052885\TRA\FINAL_MOD_7\dt251x01.dgn

NPS NO.	REG	STATE	PROJECT	SHEET NO.	TOTAL SHEETS
601 / 43918	S.E.	NC	PRA-BLRI-2P14	132	166

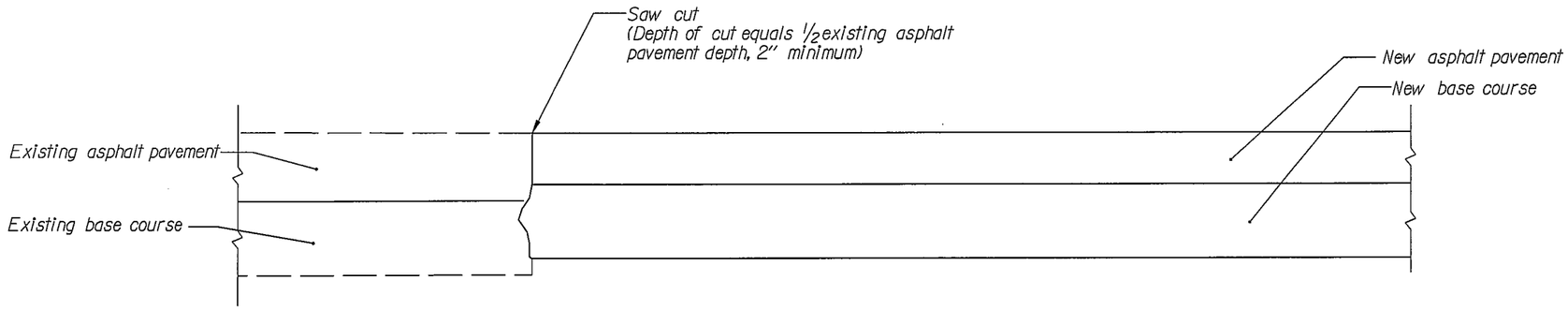

NEW PAVEMENT

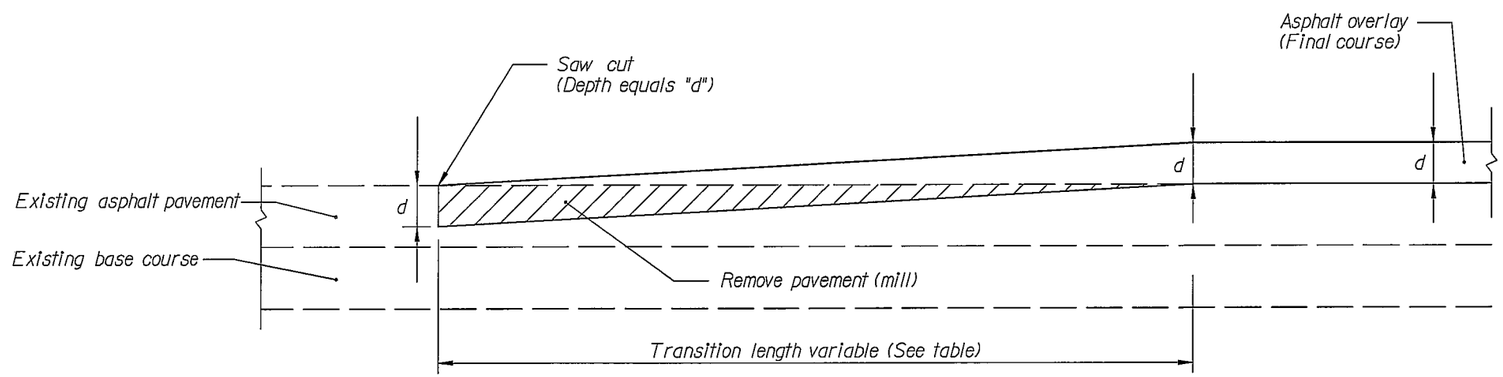

OVERLAY

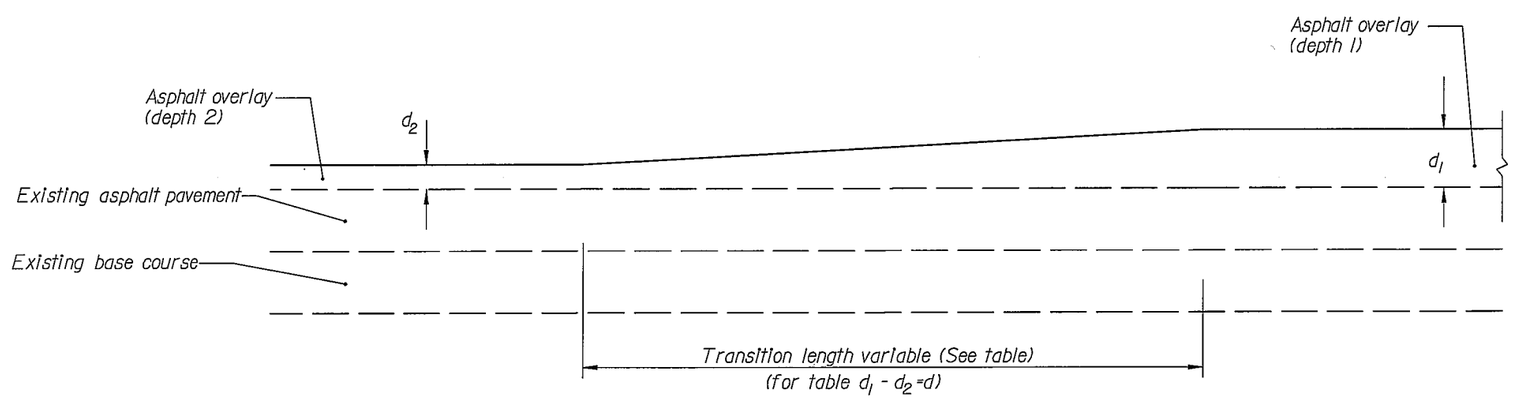

OVERLAY - DEPTH TRANSITIONS

d - Inches	Transition Length - Feet
1	20
1.5	30
2	40
2.5	50
3	60

NOT TO SCALE

U.S. DEPARTMENT OF TRANSPORTATION
FEDERAL HIGHWAY ADMINISTRATION
EASTERN FEDERAL LANDS HIGHWAY DIVISION

DETAIL

PAVEMENT TRANSITIONS

DETAIL APPROVED FOR USE --/----

REVISED:

DETAIL E401-1

7/10/2008 1:41:29 PM G:\tra\CT052885\TRA\FINAL_MOD_7\d140101.dgn

NPS NO.	REG	STATE	PROJECT	SHEET NO.	TOTAL SHEETS
601 / 43918	S.E.	NC	PRA-BLRI-2P14	133	166

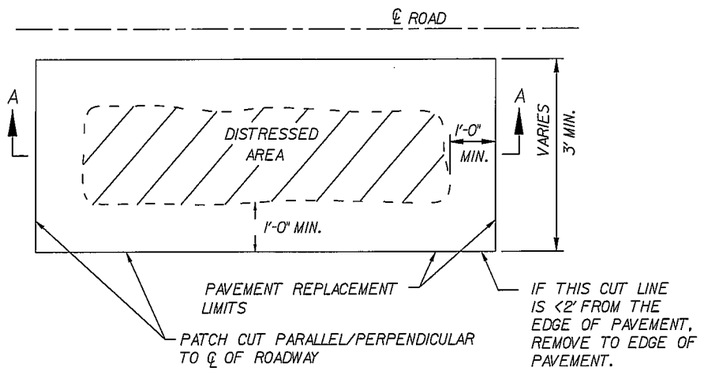

TYPICAL PLAN DETAIL

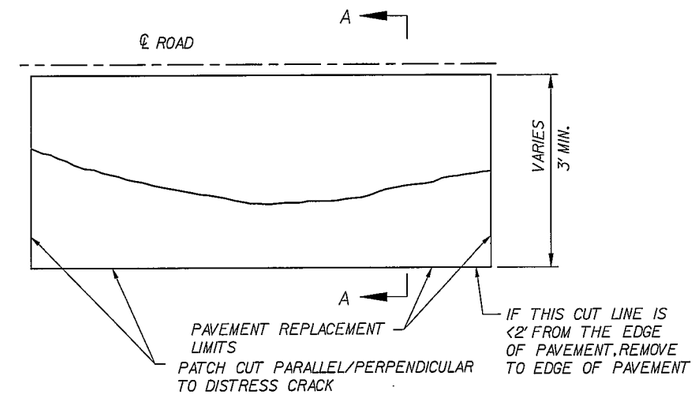

TYPICAL PLAN DETAIL

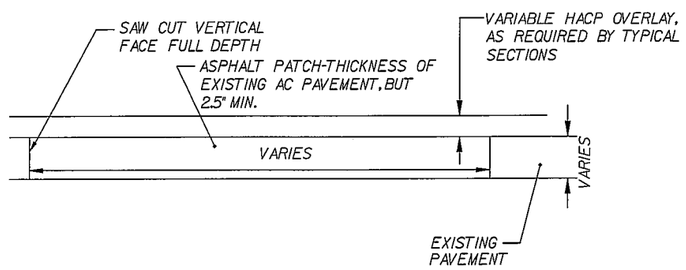

SECTION A-A

ASPHALT PAVEMENT
SHALLOW PATCH, TYPE 1

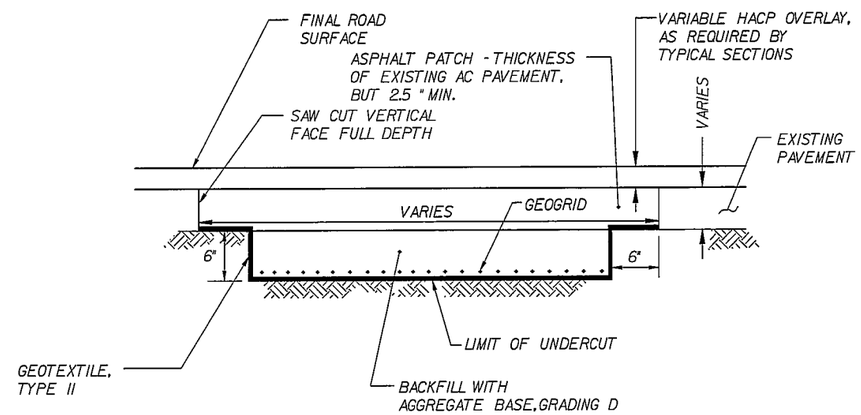

SECTION A-A

ASPHALT PAVEMENT
FULL DEPTH PATCH, TYPE 2

NO SCALE

U.S. DEPARTMENT OF TRANSPORTATION
FEDERAL HIGHWAY ADMINISTRATION
EASTERN FEDERAL LANDS HIGHWAY DIVISION

DETAIL

PAVEMENT REHABILITATION DETAILS

DETAIL APPROVED FOR USE --/----

REVISED:

DETAIL
E419-A

7/10/2008 1:41:40 PM G:\ra\CT052885\TRA\FINAL_MOD_7\dt419x01.dgn

REG	STATE	PROJECT	SHEET NO.	TOTAL SHEETS
601 / 43918	NC	PRA-BLRI-2P14	134	166

HEADWALL FOR DOUBLE PIPE CULVERT

DIMENSIONS, REINFORCING STEEL AND CONCRETE TABLE OF QUANTITIES

D	H	SQUARE HEADWALL					15° SKEW					30° SKEW					45° SKEW				
		A	B	L	CONC.	STEEL	A	B	L	CONC.	STEEL	A	B	L	CONC.	STEEL	A	B	L	CONC.	STEEL
in	ft	ft	ft	ft	ft^3	lb	ft	ft	ft	ft^3	lb	ft	ft	ft	ft^3	lb	ft	ft	ft	ft^3	lb
47	4.9	3.9	5.9	13.8	54.7	189.6	4.3	6.2	14.8	56.5	205.0	4.6	6.9	16.1	63.2	216.0	5.6	8.5	19.7	77.3	271.2
53	5.2	4.6	6.9	16.1	65.7	222.7	4.9	6.9	16.7	68.9	227.1	5.2	7.9	18.4	77.0	253.5	6.6	9.8	23.0	94.3	319.7
59	5.4	5.2	7.5	18.0	77.3	253.5	5.6	7.9	19.0	80.2	264.6	6.2	8.5	210	89.3	297.6	7.5	10.5	25.6	109.5	363.8
65	5.7	5.9	8.2	20.0	89.0	313.1	6.2	8.5	21.0	91.8	321.9	6.9	9.5	23.3	102.4	366.0	8.5	11.5	28.5	125.7	460.8
71	5.9	6.6	8.9	22.0	100.6	343.9	6.9	9.2	23.0	104.2	363.8	7.5	10.5	25.6	116.5	412.3	9.2	12.8	31.2	142.7	511.5
77	6.2	7.2	9.8	25.3	121.5	405.6	7.2	10.2	24.6	125.7	381.4	8.2	11.2	27.6	140.2	429.9	10.2	13.8	34.1	171.6	535.7
83	6.4	7.9	10.5	26.2	128.5	445.3	7.9	11.2	26.9	133.1	449.7	8.9	11.8	29.5	148.7	493.8	11.2	14.8	37.1	181.9	628.3
89	6.6	8.5	11.2	28.2	142.3	478.4	8.5	11.8	28.9	147.3	487.2	9.8	12.8	32.5	164.6	551.1	11.8	16.1	39.7	201.3	679.0
95	6.9	8.9	11.8	29.5	152.2	509.3	9.2	12.1	30.5	157.5	522.5	10.5	13.8	34.8	175.9	599.6	12.8	17.1	42.7	215.4	738.5
100	7.1	9.5	12.5	31.5	167.0	571.0	9.8	13.1	32.8	173.0	606.3	11.2	14.4	36.7	193.2	683.4	13.8	17.7	45.3	236.3	831.1
106	7.4	10.2	13.1	33.5	182.6	621.7	10.5	13.5	34.4	188.9	643.7	11.8	15.1	38.7	210.8	727.5	14.4	18.4	47.2	258.1	881.8
112	7.6	10.8	13.5	35.1	196.0	652.6	11.2	14.1	36.4	203.1	676.8	12.5	15.4	40.4	226.4	751.8	15.4	19.4	50.2	277.2	943.6
118	7.9	11.5	14.1	37.1	212.6	698.9	11.8	14.4	38.1	220.0	709.9	13.1	16.1	42.3	245.4	787.0	16.4	19.7	52.5	304.8	981.0
124	8.1	12.1	14.4	38.7	226.7	769.4	12.5	15.1	40.0	234.8	795.9	14.1	16.7	44.9	262.0	895.1	17.1	20.3	54.5	320.7	1075.8
130	8.4	12.8	15.1	40.7	244.4	815.7	13.1	15.4	41.7	252.9	837.7	14.8	17.4	46.9	282.2	945.8	18.0	21.3	57.4	345.7	1161.8
136	8.6	13.5	15.4	42.3	259.6	851.0	13.8	16.1	43.6	268.4	879.6	15.4	17.7	48.6	299.8	985.4	19.0	22.0	60.0	366.9	1214.7
142	8.9	14.1	16.1	44.3	278.3	936.9	14.4	16.4	45.3	288.2	961.2	16.1	18.4	50.5	321.4	1073.6	20.0	22.3	62.3	393.8	1336.0
148	9.1	14.8	16.4	45.9	294.5	983.2	15.1	17.1	47.2	305.1	1011.9	16.7	19.0	52.5	340.4	1135.4	20.7	23.3	64.6	416.7	1410.9
154	9.4	15.1	17.1	47.2	308.3	1020.7	15.7	17.4	48.9	319.2	1053.8	17.7	19.7	55.1	356.0	1199.3	21.7	23.9	67.3	435.8	1463.8
160	9.6	15.7	17.4	48.9	325.2	1104.5	16.4	18.0	50.9	336.5	1153.0	18.4	20.3	57.1	375.7	1300.7	22.6	24.6	69.9	460.1	1598.3
166	9.8	16.4	18.0	50.9	346.1	1168.4	17.1	18.4	52.5	358.1	1203.7	19.0	20.7	58.7	399.4	1349.2	23.3	25.6	722	489.1	1675.5
172	10.1	17.1	18.4	52.5	363.7	1219.1	17.7	19.0	54.5	376.5	1258.8	19.7	21.3	60.7	420.2	1415.3	24.3	26.2	74.8	515.6	1761.5
178	10.3	17.7	19.0	54.5	385.3	1269.8	18.4	19.7	56.4	398.7	1318.3	20.3	22.0	62.7	445.0	1457.2	25.3	26.9	77.4	544.9	1812.2

HEADWALL FOR SINGLE PIPE CULVERT

DIMENSIONS, REINFORCING STEEL AND CONCRETE TABLE OF QUANTITIES

D	H	SQUARE HEADWALL			15° SKEW			30° SKEW			45° SKEW		
		L	CONC.	STEEL	L	CONC.	STEEL	L	CONC.	STEEL	L	CONC.	STEEL
in	ft	ft	ft^3	lb	ft	ft^3	lb	ft	ft^3	lb	ft	ft^3	lb
47	4.9	7.9	32.1	108.0	8.2	33.2	116.8	9.2	37.1	130.1	11.2	45.2	154.3
53	5.2	9.2	39.2	130.1	9.8	40.6	141.1	10.8	45.2	152.1	13.1	55.4	183.0
59	5.4	10.5	46.6	156.5	10.8	48.4	156.5	12.1	53.7	176.4	15.1	65.7	213.8
65	5.7	11.8	54.4	200.6	12.1	56.5	196.2	13.5	62.9	213.8	16.7	77.0	264.6
71	5.9	13.1	62.9	213.8	13.5	65.0	218.3	15.1	72.4	246.9	18.4	88.6	297.6
77	6.2	14.1	69.6	229.3	14.8	72.0	240.3	16.4	80.5	266.8	20.3	98.5	330.7
83	6.4	15.4	78.8	273.4	16.1	91.6	277.8	18.0	91.1	317.5	22.0	111.2	385.8
89	6.6	16.7	87.2	297.6	17.4	90.4	308.6	19.4	101.0	341.7	23.6	123.6	423.3
95	6.9	18.0	98.5	330.7	18.7	101.7	341.7	20.7	113.7	374.8	25.6	139.1	465.2
100	7.1	19.4	108.8	374.8	20.0	112.7	388.0	22.3	125.7	436.5	27.2	154.0	531.3
106	7.4	20.3	117.6	407.8	21.3	121.5	425.5	23.6	135.6	471.8	28.9	166.0	573.2
112	7.6	21.7	132.4	429.9	22.6	137.0	447.5	25.3	152.9	509.3	30.8	187.2	612.9
118	7.9	23.0	140.6	463.0	23.9	145.5	480.6	26.6	162.4	533.5	32.5	198.8	645.9
124	8.1	24.3	154.7	515.9	25.3	160.0	542.3	27.9	178.7	597.4	34.1	218.6	723.1
130	8.4	25.6	165.3	555.6	26.6	171.3	573.2	29.5	191.1	643.7	36.1	233.8	784.8
136	8.6	26.9	178.3	595.2	27.9	184.7	612.9	30.8	206.2	670.2	37.7	252.1	828.9
142	8.9	27.9	189.3	645.9	28.9	196.0	665.8	32.5	218.6	749.6	39.7	267.7	919.3
148	9.1	29.2	203.1	679.0	30.2	210.1	709.9	33.8	234.5	793.7	41.3	287.1	972.2
154	9.4	30.5	217.5	723.1	31.5	225.3	740.7	35.1	251.4	833.3	43.3	307.6	1029.5
160	9.6	31.8	232.4	795.9	32.8	240.5	815.7	36.7	268.4	921.5	44.9	328.8	1124.3
166	9.8	33.1	247.6	833.3	34.1	256.4	853.2	38.1	286.0	959.0	46.6	350.3	1181.7
172	10.1	34.1	260.3	864.2	35.4	269.1	901.7	39.4	300.5	1009.7	48.6	368.0	1247.8
178	10.3	35.4	276.2	908.3	36.7	286.0	945.8	41.0	318.9	1058.2	50.2	390.6	1291.9

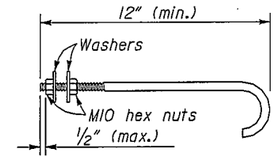

M10 HOOK BOLT DETAILS

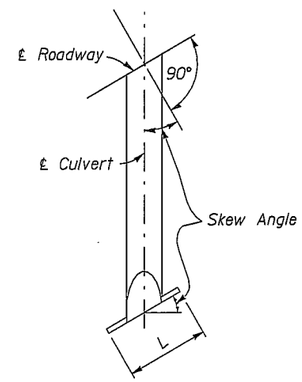

TYPICAL HALF PLAN

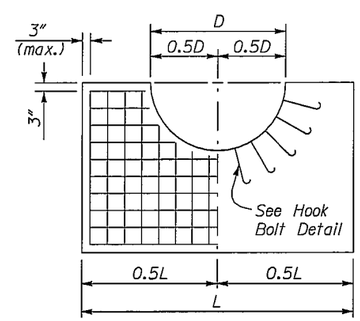

SINGLE PIPE CULVERT

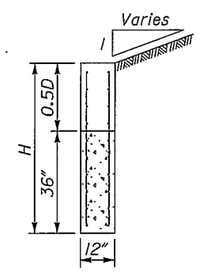

SECTION A-A

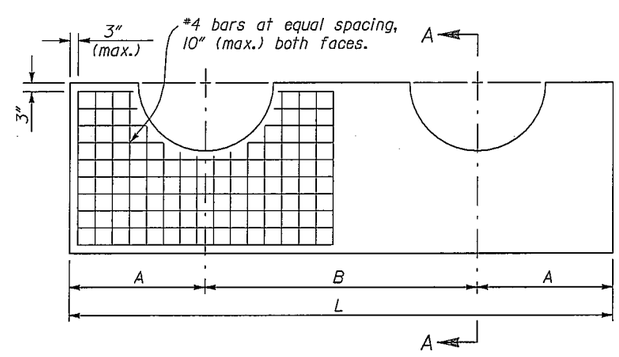

DOUBLE PIPE CULVERT HEADWALLS

NOTES:

1. Concrete conforms to Section 601. Pour concrete monolithically. Chamfer all exposed edges 3/4" and finish all exposed surfaces with a Class I ordinary finish.
2. Clearance for reinforcing steel is 2" unless otherwise noted.
3. Headwall dimension "H" may be reduced in solid rock provided the wall is keyed into the rock at least 12". Excavate and backfill according to Section 209.
4. Set hook bolts on nominal 18" centers around pipe perimeter at center of headwall. Hook bolts conform to ASTM A307. Galvanize according to ASTM A153.
5. For installations with more than two pipe culverts, increase the dimension "L" and all quantities shown for double pipe installation by adding a length equal to dimension "B" and the incremental change in quantities for each additional pipe culvert.
6. For skews other than those shown, multiply quantities and dimensions "A", "B" & "L" for square headwalls by secant of the skew angle.
7. Final quantities will be determined by using the tables on this standard.
8. Do not order materials until the length, skew angle, and slope bevel in the field have been approved.

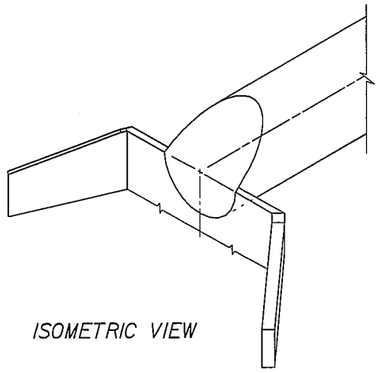

ISOMETRIC VIEW

U.S. DEPARTMENT OF TRANSPORTATION
FEDERAL HIGHWAY ADMINISTRATION
EASTERN FEDERAL LANDS HIGHWAY DIVISION

STANDARD

CONCRETE HEADWALLS

STANDARD APPROVED FOR USE

REVISED:

STANDARD 601-1

NO SCALE

7/10/2008 1:41:51 PM G:\traCT052885\TRAVFINAL_MOD_7\df601x01.dgn

REG	REG	STATE	PROJECT	SHEET NO.	TOTAL SHEETS
601 / 43918	S.E.	NC	PRA-BLRI-2P14	135	166

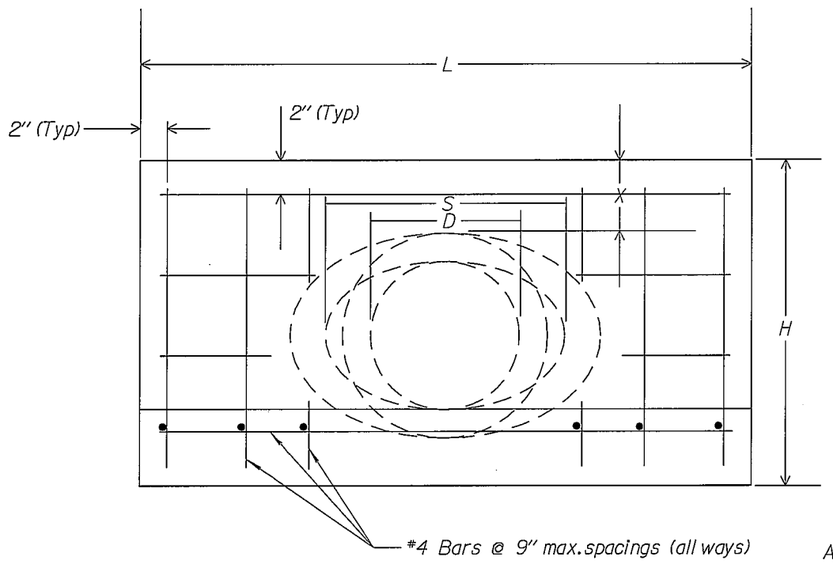

FRONT ELEVATION

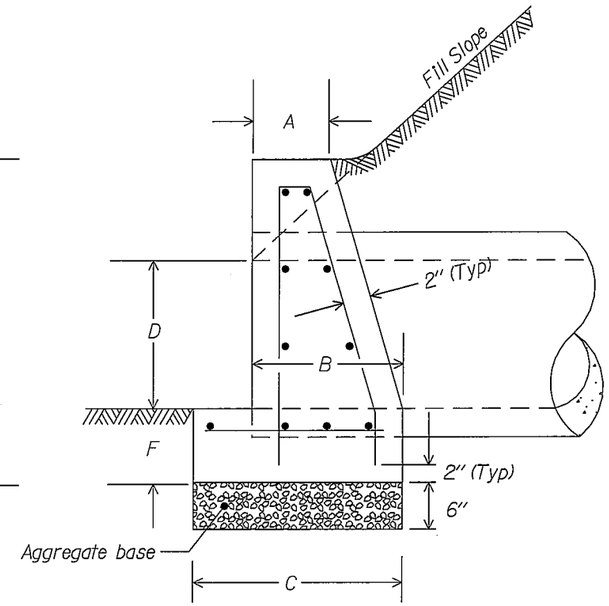

SIDE ELEVATION

Notes:

1. All headwalls are oriented parallel to the roadway centerline unless otherwise indicated on the plans or by the CO.
2. When pipes are on a skew, adapt and lengthen headwalls as directed.
3. Chamfer all exposed corners not rounded to 3/4".
4. Quantities shown are for one headwall with pipe at right angles.
5. Construct headwalls using dimensions shown under values for 1 1/2:1 slope, unless otherwise designated by the CO.
6. Provide reinforcing bars 0.9L or 0.9L' long.

HEADWALL FOR CIRCULAR PIPE

DIAMETER OF PIPE CULVERT

	6"	15"	18"	21" or 24"	27" or 30"	33" or 36"
A	0'-6"	0'-8"	0'-9"	0'-11"	1'-0"	1'-0"
B	0'-9"	1'-1"	1'-3"	1'-6"	1'-9"	2'-0"
C	1'-2"	1'-7"	1'-9"	2'-2"	2'-6"	2'-9"
D	1'-0"	1'-3"	1'-6"	2'-0"	2'-6"	3'-0"
F	0'-6"	0'-8"	0'-8"	0'-9"	0'-9"	0'-9"
H	2'-0"	2'-11"	3'-2"	3'-9"	4'-3"	4'-9"
L	3'-8"	5'-0"	6'-0"	8'-0"	10'-0"	12'-0"
CU. YDS. CONCRETE						
Conc. Pipe	0.241	0.492	0.697	1.319	2.067	2.947
C.M. Pipe	0.257	0.521	0.739	1.398	2.198	3.145

HEADWALL FOR ELLIPTICAL PIPE

SIZE OF ELLIPTICAL PIPE CULVERT (SPAN X RISE)

	23" x 14"	30" x 19"	34" x 22"	38" x 24"	42" x 27"	45" x 29"	49" x 32"	53" x 34"	60" x 38"	68" x 43"
A	0'-8"	0'-9"	0'-10"	0'-11"	0'-11"	1'-0"	1'-0"	1'-0"	1'-0"	1'-0"
B	1'-2"	1'-5"	1'-6"	1'-8"	1'-9"	1'-10"	1'-11"	1'-11"	1'-11"	2'-0"
C	1'-8"	1'-11"	2'-1"	2'-4"	2'-5"	2'-7"	2'-8"	2'-9"	3'-3"	3'-6"
D	1'-2"	1'-7"	1'-10"	2'-0"	2'-3"	2'-5"	2'-8"	2'-10"	3'-2"	3'-7"
F	0'-8"	0'-8"	0'-9"	0'-9"	0'-9"	0'-9"	0'-9"	0'-9"	0'-9"	0'-9"
H	2'-10"	3'-3"	3'-7"	3'-9"	4'-0"	4'-2"	4'-5"	4'-7"	4'-11"	5'-4"
L	5'-5"	7'-2"	8'-6"	9'-2"	10'-2"	10'-11"	12'-1"	12'-11"	13'-0"	13'-0"
S	1'-11"	2'-6"	2'-10"	3'-2"	3'-6"	3'-9"	4'-1"	4'-5"	5'-0"	5'-8"
CU. YDS. CONCRETE										
Conc. Pipe	0.502	0.855	1.236	1.500	1.811	2.101	2.512	2.801	2.969	2.904

U.S. DEPARTMENT OF TRANSPORTATION
FEDERAL HIGHWAY ADMINISTRATION
EASTERN FEDERAL LANDS HIGHWAY DIVISION

STANDARD
CONCRETE HEADWALL
FOR
18" TO 36" PIPE CULVERT

STANDARD APPROVED FOR USE
REVISED:

STANDARD
601-4

7/10/2008 1:42:07 PM G:\Tro\CT052885\TRA\FINAL_MOD_7\d1601x04.dgn

METAL ROUND PIPE CULVERT

FILL HEIGHT AND METAL THICKNESS TABLE

HELICAL LOCKSEAM AND WELDED SEAM PIPE CULVERT

PIPE SIZE	MINIMUM COVER	STEEL													
		2⅔"x ½" CORRUGATIONS					3"x 1" CORRUGATIONS					5"x 1" CORRUGATIONS			
		METAL THICKNESS IN INCH/GAGE													
DIAMETER INCHES	INCHES	0.064/16	0.079/14	0.109/12	0.138/10	0.168/8	0.064/16	0.079/14	0.109/12	0.138/10	0.168/8	0.064/16	0.079/14	0.109/12	0.138/10	0.168/8
		MAXIMUM FILL HEIGHT ABOVE TOP OF PIPE IN FEET														
12	12	100	100													
15	12	100	100													
18	12	100	100	100												
24	12	100	100	100												
30	12	85	100	100												
36	12	71	88	100	100		81	100	100							
42	12	60	76	100	100	100	69	87	100							
48	12	53	66	93	100	100	61	76	100			54	68	95		
54	18		59	82	100	100	54	67	95	100	100	48	60	84	100	100
60	18			74	95	100	48	61	85	100	100	43	54	76	98	100
66	18				87	100	44	55	78	100	100	39	49	69	89	100
72	18				79	97	40	50	71	92	100	36	45	63	81	100
78	18					86	37	47	66	85	100	33	41	58	75	92
84	18					75	34	43	61	78	96	31	38	54	70	85
90	18						32	40	57	73	90	29	36	50	65	80
96	18							38	53	69	84		34	47	61	75
102	18							35	50	65	79		32	44	57	70
108	18								47	61	75			42	54	66
114	18								45	58	71			40	51	63
120	18								42	55	67			38	49	60
126	18									52	64				46	57
132	18									50	61				44	50
138	18									48	58				42	50
144	18										56					50

MINIMUM COVER	ALUMINUM							
	2⅔"x ½" CORRUGATIONS				3"x 1" CORRUGATIONS			
	METAL THICKNESS IN INCH/GAGE							
INCHES	0.060/16	0.075/14	0.105/12	0.135/10	0.060/16	0.075/14	0.105/12	0.135/10
	MAXIMUM FILL HEIGHT ABOVE TOP OF PIPE IN FEET							
12	100	100						
12	100	100						
12	100	100						
12	77	96	100					
12		77	100		71	89	100	
12		64	90	100	59	74	100	100
12			77	99	50	63	89	100
12			66	86	44	55	78	100
18			54	70	39	49	69	92
18				59		44	62	83
18						40	56	75
18						37	52	69
24						34	48	64
24							44	59
24							41	55
24							38	51
24								46
24								41
24								
24								

NOTES:

1. When directed, camber pipe culverts upward from a chord through the inlet and outlet inverts an ordinate amount equal to 1% of the pipe length. Develop camber on a parabolic curve. If the midpoint elevation on the parabolic curve as designed exceeds the elevation of the inlet invert, reduce the amount of camber or increase the pipe culvert gradient.
2. Fill heights exceeding 100 feet require special analysis by the Government.
3. The fill heights in the table are for helical lockseam and welded seam pipe only. Fill heights for culvert pipe with annular corrugations are more restrictive than those of helical lockseam and welded seam pipe. Obtain approval before furnishing annular corrugated pipe.
4. Measure minimum cover from the top of the pipe culvert to the subgrade for flexible pavements, and to the top of the pavement for rigid pavements. Measure maximum fill height from the top of the pipe to the top of the pavement for both flexible and rigid pavement.

METAL PIPE ARCH CULVERT

FILL HEIGHT AND METAL THICKNESS TABLE

HELICAL LOCKSEAM AND WELDED SEAM PIPE ARCH CULVERT

PIPE ARCH SIZE	CORNER RADIUS	MINIMUM COVER	STEEL												
			2⅔"x ½" CORRUGATIONS					3"x 1" CORRUGATIONS				5"x 1" CORRUGATIONS			
			METAL THICKNESS IN INCH/GAGE												
SPAN X RISE INCHES	INCHES	INCHES	0.064/16	0.079/14	0.109/12	0.138/10	0.168/8	0.079/14	0.109/12	0.138/10	0.168/8	0.079/14	0.109/12	0.138/10	0.168/8
			MAXIMUM FILL HEIGHT ABOVE TOP OF PIPE IN FEET												
17 x 13	3½	12	13												
21 x 15	4⅛	12	12												
24 x 18	4⅞	12	13												
28 x 20	5½	12	13												
35 x 24	6⅞	12	12												
42 x 29	8¼	12	12												
49 x 33	9⅝	12		12											
57 x 38	11	12			12										
64 x 43	12⅜	12			12										
71 x 47	13¾	12				12									
77 x 52	15⅛	12					12								
83 x 57	16½	12					12								

---															
60 x 46	18¾	12							21				21		
66 x 51	20¾	12							21				21		
73 x 55	22⅞	12							20				20		
81 x 59	20⅞	12						17	--			17	--		
87 x 63	22⅝	12						17	--			17	--		
95 x 67	24⅜	12						17	--			17	--		
103 x 71	26⅛	18							17			17	--		
112 x 75	27¾	18							16				16		
117 x 79	29½	18							16				16		
128 x 83	31¼	24								16				16	
137 x 87	33	24								16				16	
142 x 91	34¾	24									16				16

MINIMUM COVER	ALUMINUM							
	2⅔"x ½" CORRUGATIONS				3"x 1" CORRUGATIONS			
	METAL THICKNESS IN INCH/GAGE							
INCHES	0.060/16	0.075/14	0.105/12	0.135/10	0.060/16	0.075/14	0.105/12	0.135/10
	MAXIMUM FILL HEIGHT ABOVE TOP OF PIPE IN FEET							
12	13							
12	12							
12	13							
12		13						
12		12						
15			12					
15			12					
15				12				
18				12				
18								
--								
--								
--								
--								
15					21			
18					21			
18						20		
21							17	
21							17	
24							17	
24								17
27								
27								

U.S. DEPARTMENT OF TRANSPORTATION
FEDERAL HIGHWAY ADMINISTRATION
FEDERAL LANDS HIGHWAY

STANDARD

METAL PIPE CULVERT

STANDARD APPROVED FOR USE --/----

REVISED:

STANDARD 602-1

7/11/2008 11:00:26 AM G:\fra\CT052885\TRA\FINAL_MOD_7\sl602x01.dgn

NPS NO.	REG	STATE	PROJECT	SHEET NO.	TOTAL SHEETS
601 / 43918	SE	NC	PRA-BLRI-2P14	137	166

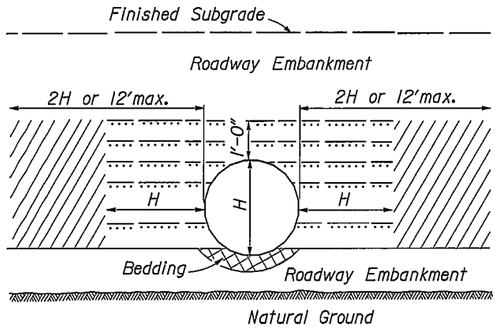

ABOVE NATURAL GROUND

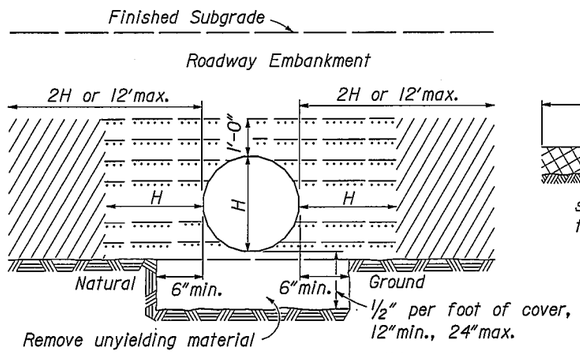

ON UNYIELDING MATERIAL

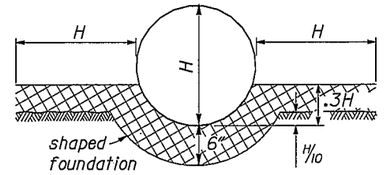

CLASS B BEDDING

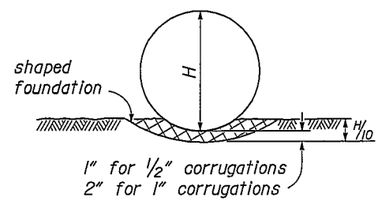

CLASS C BEDDING

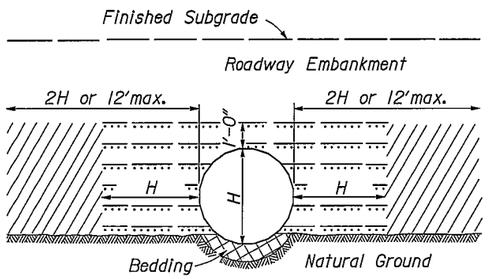

ON NATURAL GROUND

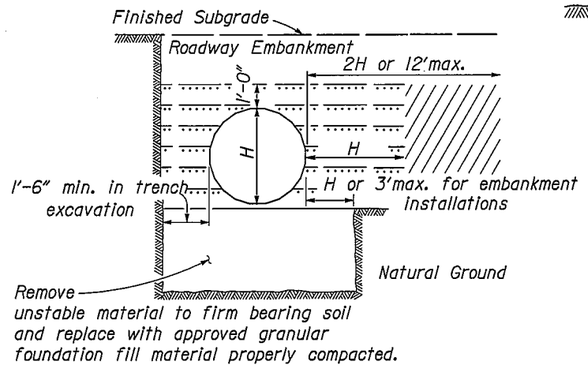

ON UNSTABLE MATERIAL

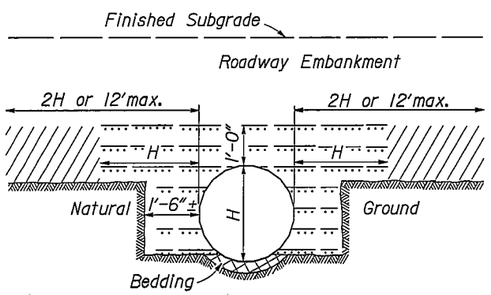

ABOVE AND BELOW
NATURAL GROUND

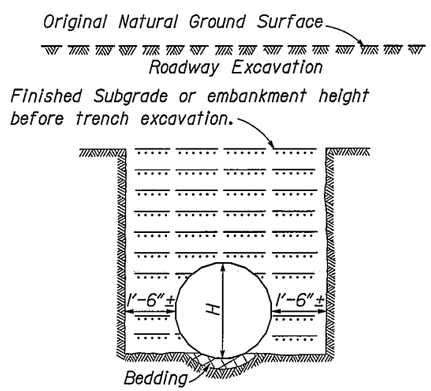

BELOW NATURAL GROUND OR
TRENCH EXCAVATION IN EMBANKMENT

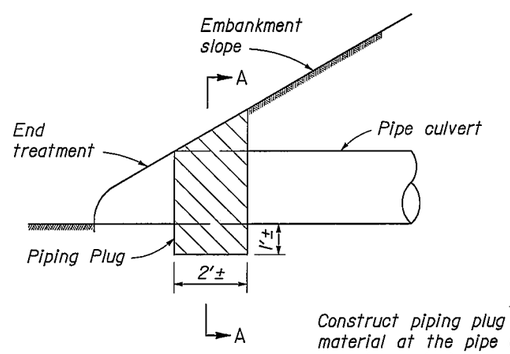

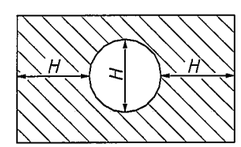

SECTION A-A

Construct piping plug of impermeable backfill material at the pipe culvert inlet where granular material is used for backfill.

PIPING PLUG

NOTES:

1. When directed, camber pipe culverts upward from a chord through the inlet and outlet inverts an ordinate amount equal to 1% of the pipe length. Develop camber on a parabolic curve. If the midpoint elevation on the parabolic curve as designed exceeds the elevation of the inlet invert, reduce the amount of camber or increase the pipe culvert gradient.

2. H equals the diameter of all round pipe culverts or the rise dimension of all pipe arch culverts.

3. Bed pipe culverts 48 inches and larger in diameter and pipe arch culverts 38 inches and greater in rise in Class B Bedding. Bed smaller pipe culverts in Class B or C Bedding.

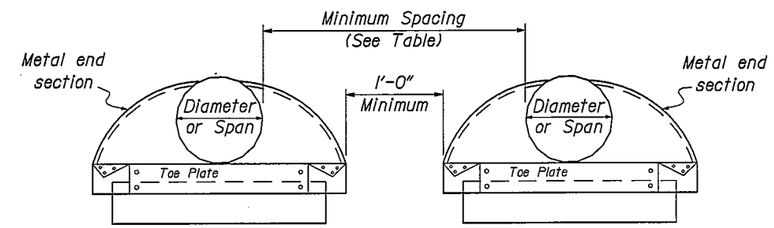

MINIMUM SPACING	
DIAMETER or SPAN INCHES	SPACING INCHES
UP to 48	24
48 and UP	1/2 Diameter or Span or 36 whichever is less

MULTIPLE PIPE INSTALLATION

Bedding Material

Embankment material placed in layers not exceeding 6" compacted depth.

Approved granular material or fine compactable soil placed in layers not exceeding 6" compacted depth.

NO SCALE

U.S. DEPARTMENT OF TRANSPORTATION
FEDERAL HIGHWAY ADMINISTRATION
FEDERAL LANDS HIGHWAY

STANDARD

METAL AND PLASTIC
PIPE CULVERT BEDDING

STANDARD APPROVED FOR USE --/----

REVISED:

STANDARD
602-3

7/10/2008 1:42:19 PM G:\traCT052885\TRAFINAL_MOD_7\df602x03.dgn

NPS NO.	REG	STATE	PROJECT	SHEET NO.	TOTAL SHEETS
601 / 43918	SE	NC	PRA-BLRI-2P14	138	166

POLYETHYLENE (PE) PLASTIC ROUND PIPE CULVERT

FILL HEIGHT TABLE AND MINIMUM CELL CLASSIFICATION NUMBER PER ASTM D 3350

SMOOTH WALL, CORRUGATED AND RIBBED PIPE CULVERT

SMOOTH WALL (SOLID WALL)

PIPE SIZE DIAMETER INCHES	MINIMUM COVER INCHES	CELL CLASSIFICATION NUMBER 335434C — MINIMUM WALL THICKNESS IN INCHES 0.607	0.857	0.923	1.154	1.385	1.292	1.477
		MAXIMUM FILL HEIGHT IN FEET						
12	12	57						
18	12		52					
24	12			38				
30	12				38			
36	12					38		
42	12						27	
48	12							27

CORRUGATED

PIPE SIZE DIAMETER INCHES	MINIMUM COVER INCHES	CELL CLASS. NO. 315412C MAX. FILL HEIGHT IN FT.	CELL CLASS. NO. 324420C MAX. FILL HEIGHT IN FT.
12	12	11	10
15	12	11	10
18	12	12	10
24	12	12	10
30	12	12	10
36	12	11	10

RIBBED

PIPE SIZE DIAMETER INCHES	MINIMUM COVER INCHES	CELL CLASS. NO. 334433C MAX. FILL HEIGHT IN FEET	CELL CLASS. NO. 335434C MAX. FILL HEIGHT IN FEET
18	12	18	24
24	12	22	28
30	12	22	28
36	12	25	31
42	12	21	27
48	12	21	26

POLYVINYL CHLORIDE (PVC) PLASTIC ROUND PIPE CULVERT

FILL HEIGHT TABLE AND MINIMUM CELL CLASSIFICATION NUMBER PER ASTM D 1784

SMOOTH WALL AND RIBBED PIPE CULVERT

SMOOTH WALL (SOLID WALL)

PIPE SIZE DIAMETER INCHES	MINIMUM COVER INCHES	CELL CLASS. NO. 12454C — MIN. WALL THICKNESS IN INCHES 0.358	0.438	CELL CLASS. NO. 12364C — 0.358	0.438
		MAX. FILL HEIGHT IN FEET			
12	12	65		69	
15	12		62		66

RIBBED

PIPE SIZE DIAMETER INCHES	MINIMUM COVER INCHES	CELL CLASS. NO. 12454C MAX. FILL HEIGHT IN FEET	CELL CLASS. NO. 12364C MAX. FILL HEIGHT IN FEET
12	12	37	26
15	12	32	22
18	12	33	23
24	12	29	21
30	12	28	20
36	12	27	19
42	12	26	18
48	12	24	17

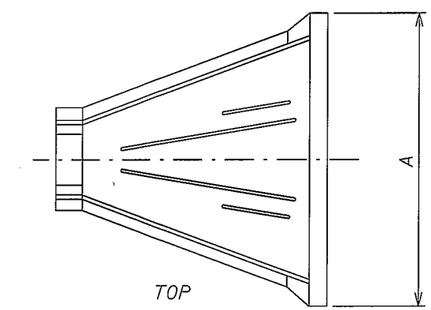

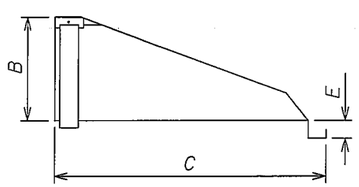

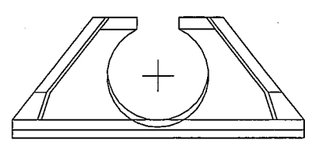

PLASTIC PIPE END SECTION

PIPE SIZE DIAMETER	DIMENSIONS A	B	C	E
12	42	15	33	6
15	46	25	45	6
18	54	29	55	6
24	64	37	65	6
30	88	36	64	6
36	88	43	67	6

NOTES:

1. When directed, camber pipe culverts upward from a chord through the inlet and outlet inverts an ordinate amount equal to 1% of the pipe length. Develop camber on a parabolic curve. If the midpoint elevation on the parabolic curve as designed exceeds the elevation of the inlet invert, reduce the amount of camber or increase the pipe culvert gradient.

2. Measure minimum cover from the top of the pipe culvert to the subgrade for flexible pavements, and to the top of the pavement for rigid pavements. Measure maximum fill height from the top of the pipe to the top of the pavement for both flexible and rigid pavement.

U.S. DEPARTMENT OF TRANSPORTATION
FEDERAL HIGHWAY ADMINISTRATION
FEDERAL LANDS HIGHWAY

STANDARD

PLASTIC PIPE CULVERT

STANDARD APPROVED FOR USE:

REVISED:

STANDARD 602-5

7/10/2008 1:42:33 PM G:\tra\CT052885\TRA\FINAL_MOD_7\df602x05.dgn

NPS NO.	REG	STATE	PROJECT	SHEET NO.	TOTAL SHEETS
601 / 43918	S.E.	NC	PRA-BLRI-2P14	139	166

CONCRETE ROUND PIPE CULVERT

FILL HEIGHT AND PIPE CLASS TABLE

PIPE SIZE DIAMETER INCHES	MINIMUM COVER INCHES	EMBANKMENT CLASS II	EMBANKMENT CLASS III	EMBANKMENT CLASS IV	EMBANKMENT CLASS V	TRENCH CLASS II	TRENCH CLASS III	TRENCH CLASS IV	TRENCH CLASS V
		MAXIMUM FILL HEIGHT ABOVE TOP OF PIPE IN FEET							
12	12	11	11	16	23	18	18	26	37
18	12	10	10	25	39	14	14	31	45
24	12	11	11	15	31	15	15	22	40
30	12	9	13	16	35	13	17	20	46
36	12	9	9	20	41	11	14	26	56
48	12	12	14	26	44	16	17	31	50
60	12	15	17	28	44	15	20	32	50
72	12	13	17	31	41	16	20	35	49
84	12	13	19	31		15	23	37	
96	12	13	20			16	24		
108	12	16	20			19	26		

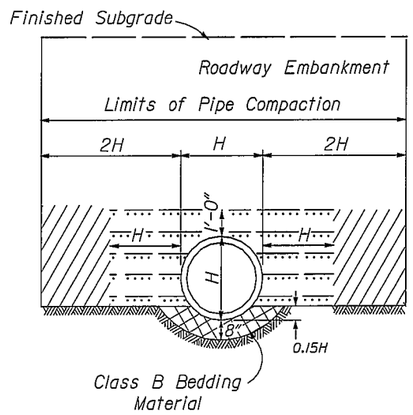

EMBANKMENT INSTALLATION

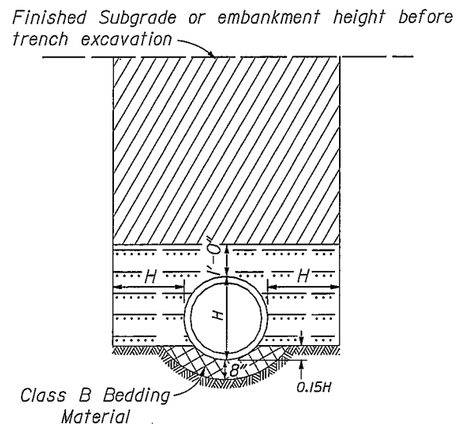

TRENCH INSTALLATION

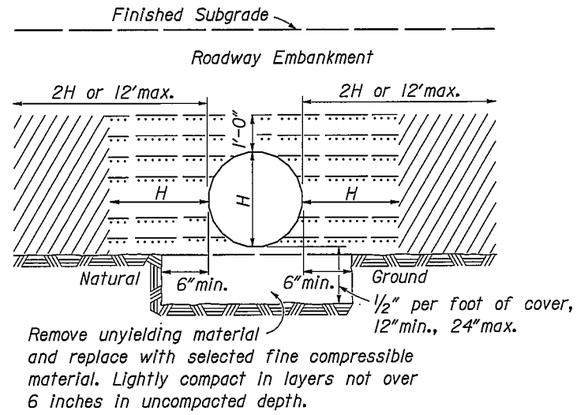

ON UNYIELDING MATERIAL

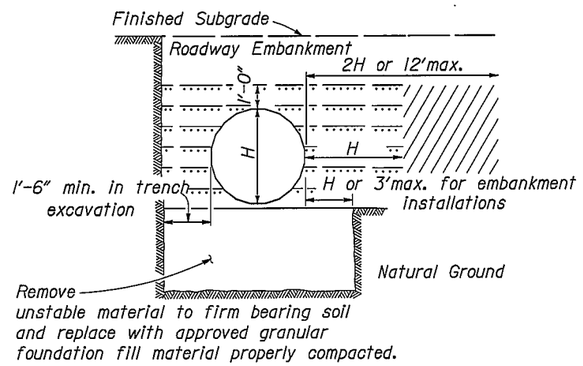

ON UNSTABLE MATERIAL

LEGEND:

- Bedding Material
- Approved granular material or fine compactable soil placed in layers not exceeding 6" compacted depth.
- Embankment material placed in layers not exceeding 6"compacted depth.
- Impermeable backfill material

NOTE:

1. When directed, camber pipe culverts upward from a chord through the inlet and outlet inverts an ordinate amount equal to 1% of the pipe length. Develop camber on a parabolic curve. If the midpoint elevation on the parabolic curve as designed exceeds the elevation of the inlet invert, reduce the amount of camber or increase the pipe culvert gradient.
2. Measure minimum cover from the top of the pipe culvert to the subgrade for flexible pavements, and to the top of the pavement for rigid pavements. Measure maximum fill height from the top of the pipe to the top of the pavement for both flexible and rigid pavements.
3. Pipe compaction limits shown are for pipe installation in an embankment. For pipe installation in a trench, the compaction limits shall be the walls of the trench.
4. When grades exceed 10%, install supplemental concrete pipe ties on pipe culvert or install bell and spigot pipe.
5. Maximum fill heights for pipe culvert installations may be increased on approval of site-specific structural pipe designs meeting the criteria of AASHTO Standard Specifications for Highway Bridges.

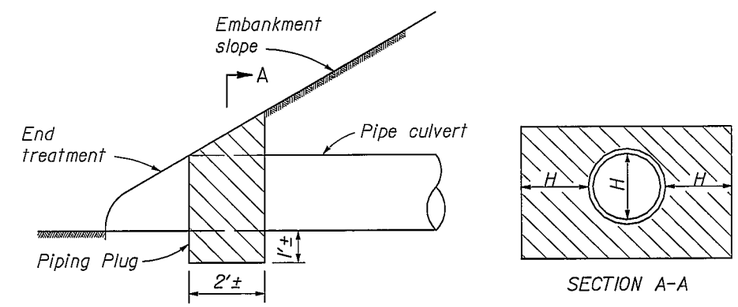

SECTION A-A

Construct a piping plug of impermeable backfill material at the pipe inlet where granular material is used for backfill.

PIPING PLUG

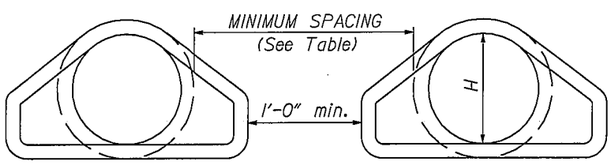

MINIMUM SPACING		
DIAMETER INCHES	EMBANKMENT	TRENCH
12-36	15"	2H
36-96	1 1/2	72"
OVER 96	48"	72"

MULTIPLE ROUND PIPE INSTALLATION

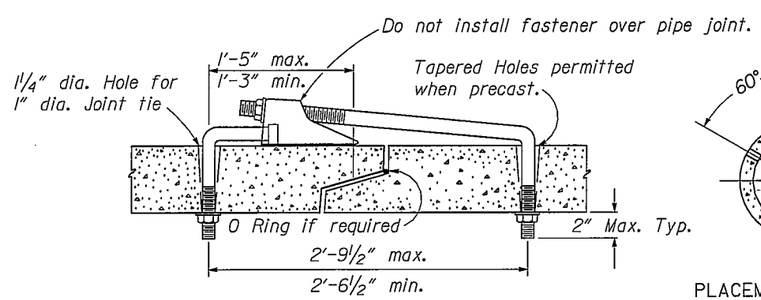

SUPPLEMENTAL CONCRETE PIPE TIE

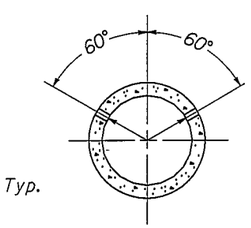

PLACEMENT OF HOLES

NO SCALE

U.S. DEPARTMENT OF TRANSPORTATION
FEDERAL HIGHWAY ADMINISTRATION
FEDERAL LANDS HIGHWAY

DETAIL

CONCRETE PIPE CULVERT INSTALLATION

DETAIL APPROVED FOR USE --/----

REVISED: 4/23/02

DETAIL E602-7

7/10/2008 1:42:45 PM G:\traCT052885\TRAFINAL_MOD_7\dt602x07.dgn

NPS NO.	REG	STATE	PROJECT	SHEET NO.	TOTAL SHEETS
601 43918	S.E.	NC	PRA-BLRI-2P14	140	166

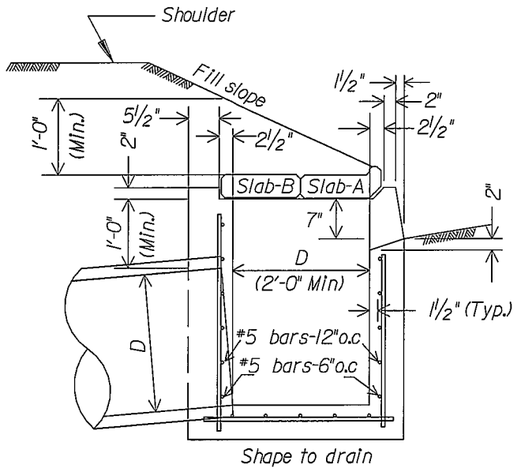

TYPE - 4A

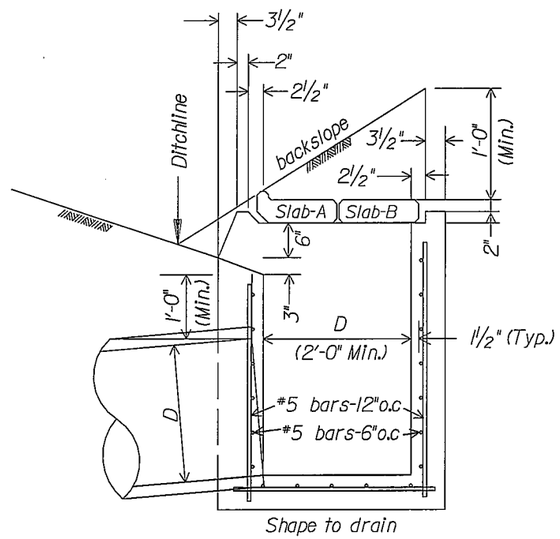

TYPE - 4B

Notes:

1. At the option of the Contractor, walls less than 4 feet deep may be of concrete or concrete block.
2. Inlets to be parallel to roadway centerline and grade. For pipes on skew, adjust inlets as directed.
3. Ditch or paved waterways to be warped and widened near inlets as directed by the CO, to facilitate drainage and to protect slopes at ends of inlets.
4. For payment purposes, one slab A plus one slab B or two slabs B constitute one concrete cover.

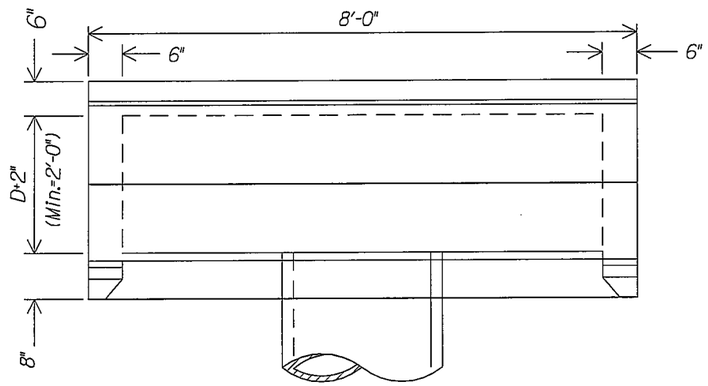

PLAN

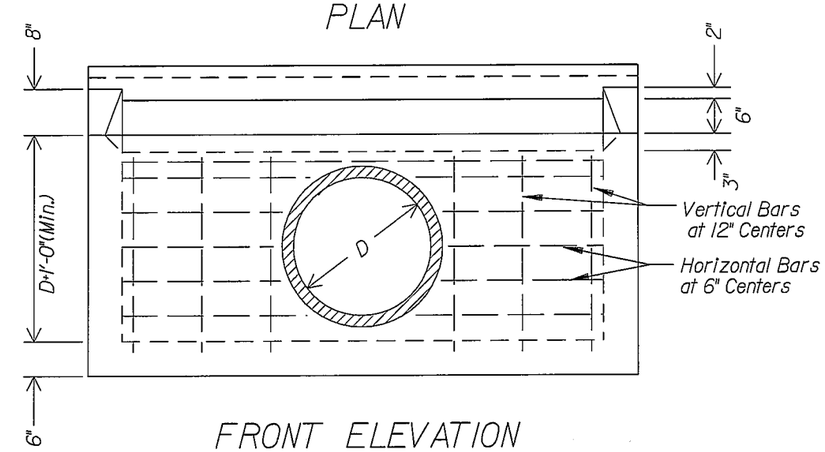

FRONT ELEVATION

(Type 4B, shown, other types comparable)

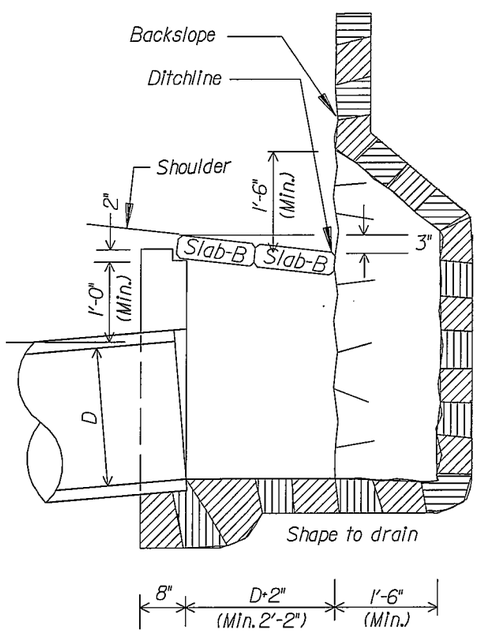

TYPE - 4C

Note: In rock without backwall or floor. Reinforce same as Type 4A

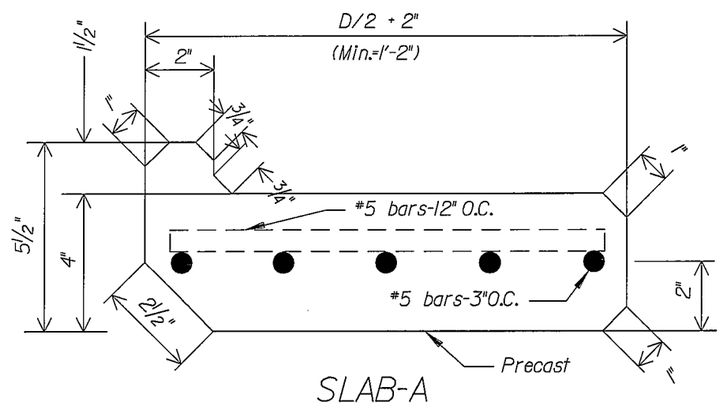

SLAB-A

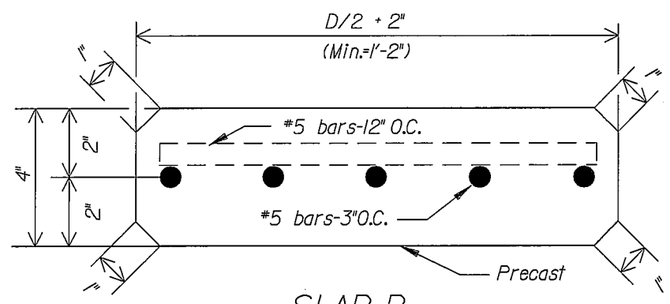

SLAB-B

Length of slabs 8'-0"

U.S. DEPARTMENT OF TRANSPORTATION
FEDERAL HIGHWAY ADMINISTRATION
EASTERN FEDERAL LANDS HIGHWAY DIVISION

DETAIL

INLET, TYPE 4A, 4B, and 4C

DETAIL APPROVED FOR USE --/----

REVISED:

DETAIL E604-1

7/10/2008 1:42:56 PM G:\tra\CT052885\TRA\FINAL_MOD_7\dt604x01.dgn

NPS NO.	REG	STATE	PROJECT	SHEET NO.	TOTAL SHEETS
601 / 43918	SE	NC	PRA-BLRI 2P14	141	166

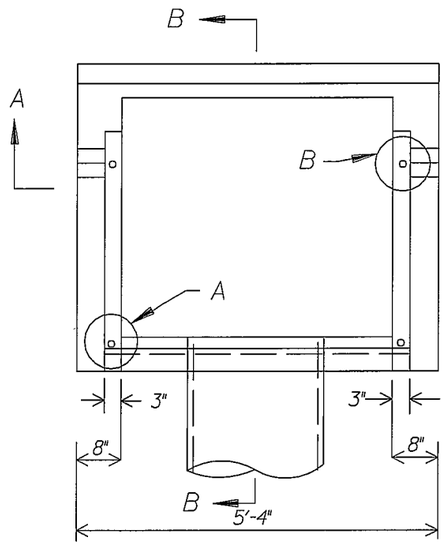

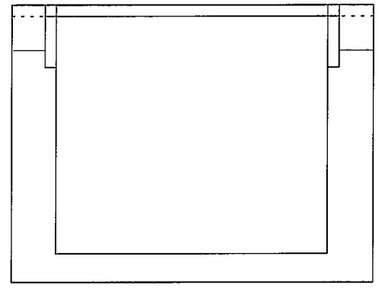

SECTION A-A

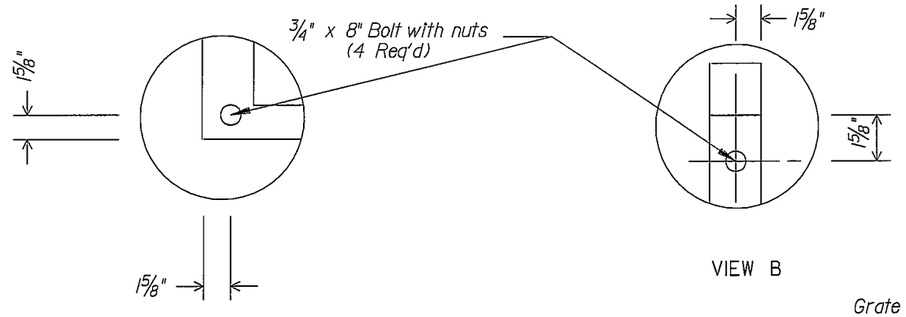

VIEW A

VIEW B

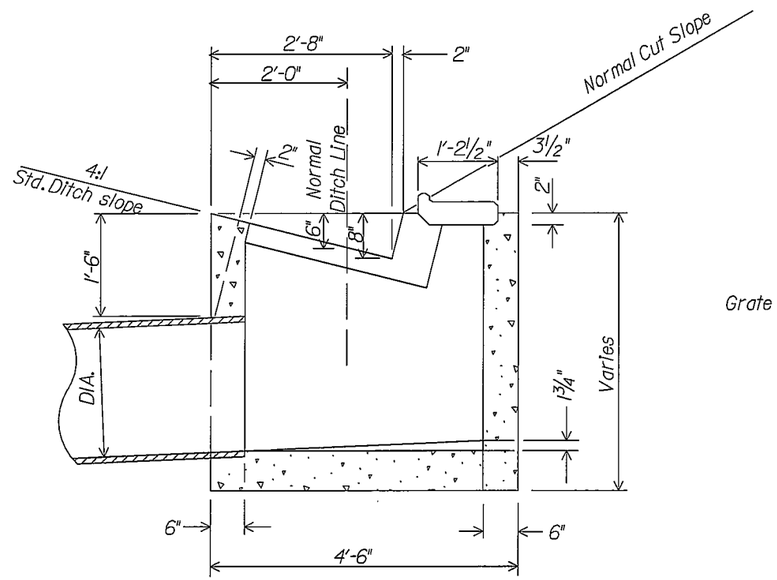

SECTION B-B

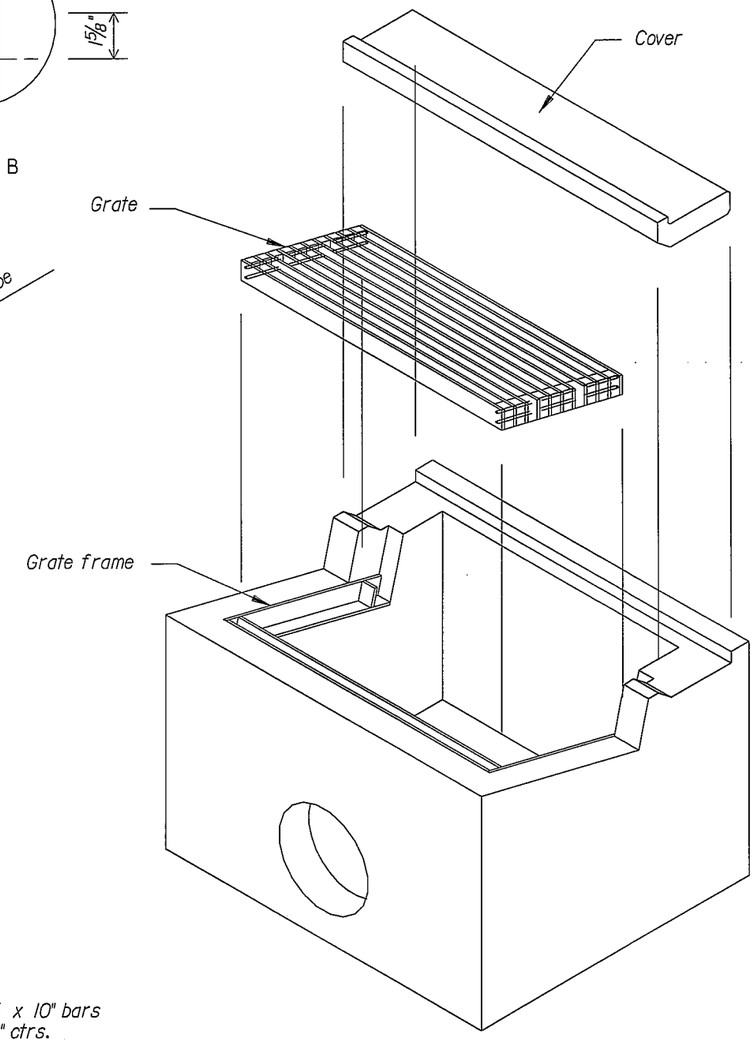

ISOMETRIC VIEW

Notes:

1. All reinforcing bars are #5, placed 1 1/2" minimum from face of concrete.
2. In floors bars to be on 6" centers each way. In walls horizontal bars to be on 6" centers and vertical bars to be on 12" centers.
3. All square corners on precast conver have 1/2" x 45 chamfer.
4. Bolt grate frame to inlet; alternate fastening methods will be allowed with the approval of the CO.
5. See sheet 2 of 2 Detail 604-2 for metal frame and grating.
6. Inlet shown in cut location. In fill locations, inlet to be similar except pipe outlet is on opposite side.

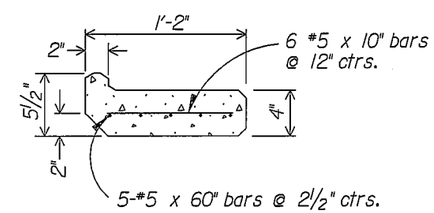

PRECAST COVER
Length=5'-4"

U.S. DEPARTMENT OF TRANSPORTATION
FEDERAL HIGHWAY ADMINISTRATION
EASTERN FEDERAL LANDS HIGHWAY DIVISION

DETAIL

INLET, TYPE 4D

1 of 2

DETAIL APPROVED FOR USE --/----

REVISED:

DETAIL
E604-2

7/10/2008 1:43:12 PM G:\roCT052885\TRAFINAL_MOD_7\dt604x02.dgn

NPS NO.	REG	STATE	PROJECT	SHEET NO.	TOTAL SHEETS
601 / 43918	SE	NC	PRA-BLRI 2P14	142	166

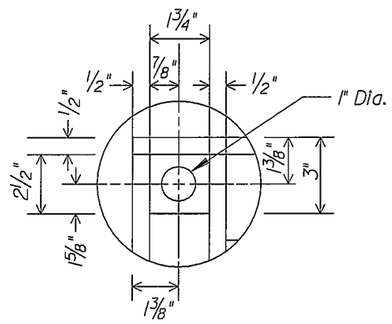

VIEW B

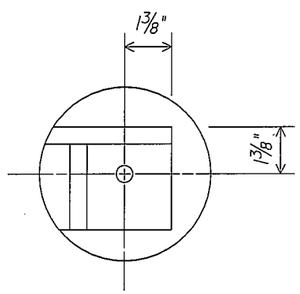

VIEW D

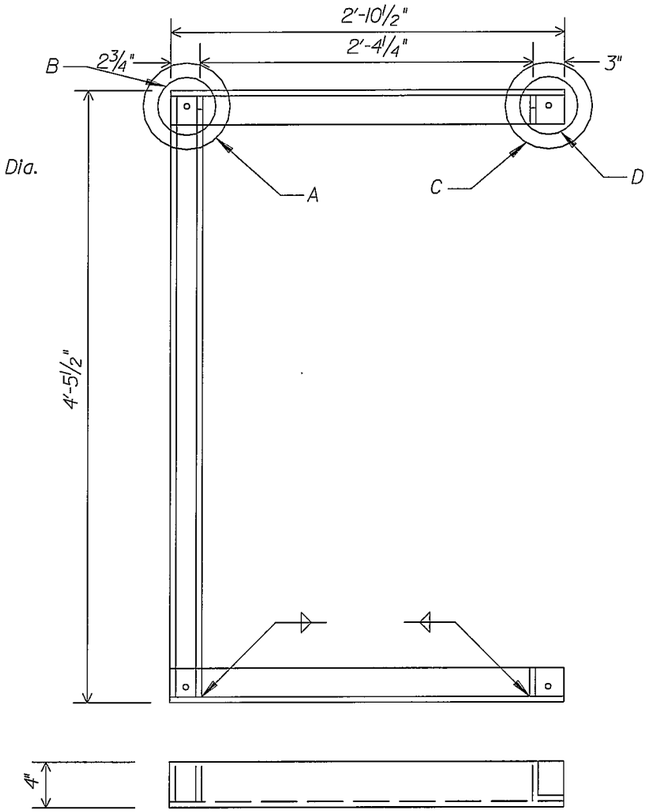

GRATE FRAME

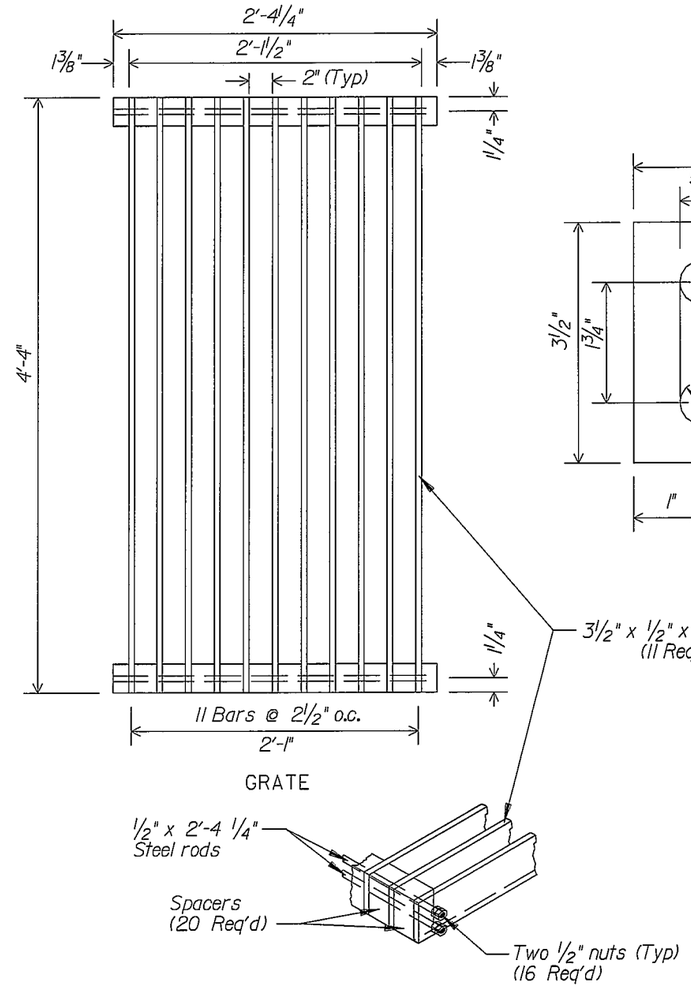

GRATE

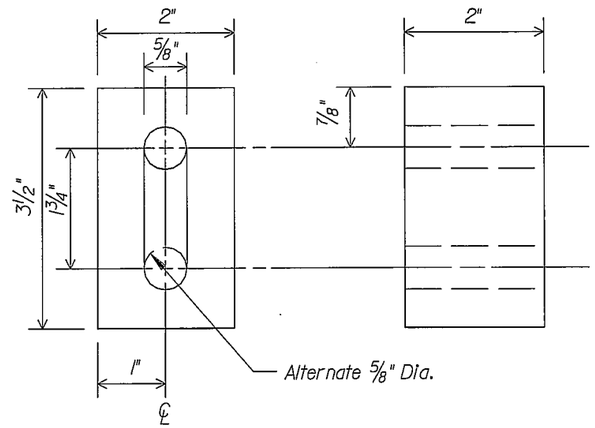

METAL SPACERS

Notes:

1. Alternate spacers include 5/8" Dia. holes instead of the slot shown, or 2 pieces of 1/2" galvanized iron pipe.
2. Four 1/2" Dia. x 2'-4 1/4" steel rods, two nuts each end rods threaded 2" +/- each end.
3. In place of rods and nuts, bars may be welded together using spacers with 2 extra 1 3/4" outside spacers added to each end.
4. Galvanize all metal parts for frame and grating after fabrication.
5. Frame and grating are steel.

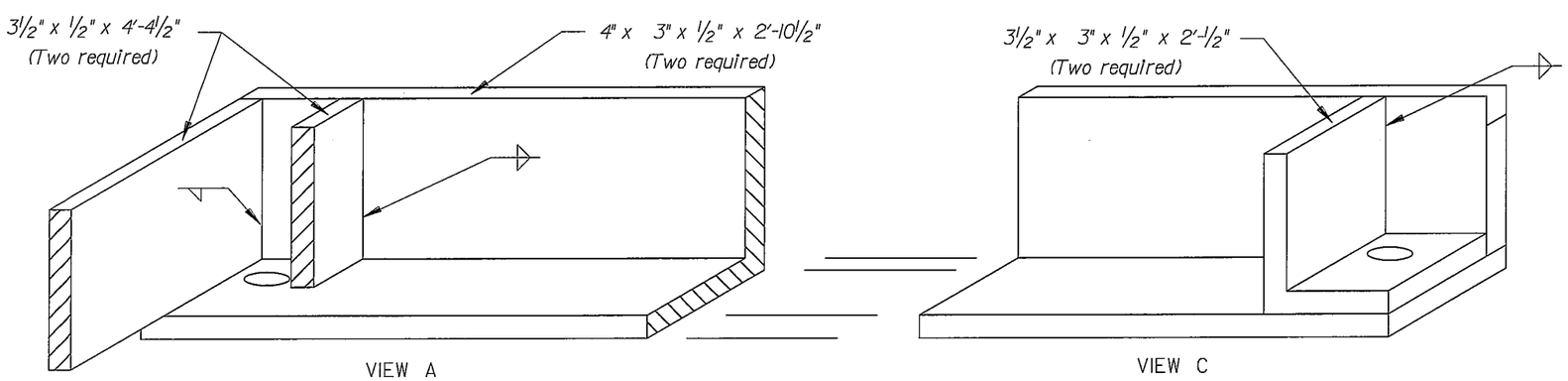

VIEW A
(OBLIQUE)

VIEW C
(OBLIQUE)

LEGEND

weld both sides

fillet lap weld

U.S. DEPARTMENT OF TRANSPORTATION
FEDERAL HIGHWAY ADMINISTRATION
EASTERN FEDERAL LANDS HIGHWAY DIVISION

DETAIL

INLET, TYPE 4D

2 of 2

DETAIL APPROVED FOR USE --/----

REVISED: 4/29/02

DETAIL
E604-2

7/10/2008 1:43:22 PM G:\Tro\CT052885\TRAVFINAL_MOD_7\d1604x02.dgn

NPS NO.	REG	STATE	PROJECT	SHEET NO.	TOTAL SHEETS
601 / 43918	S.E.	NC	PRA-BLRI-2P14	143	166

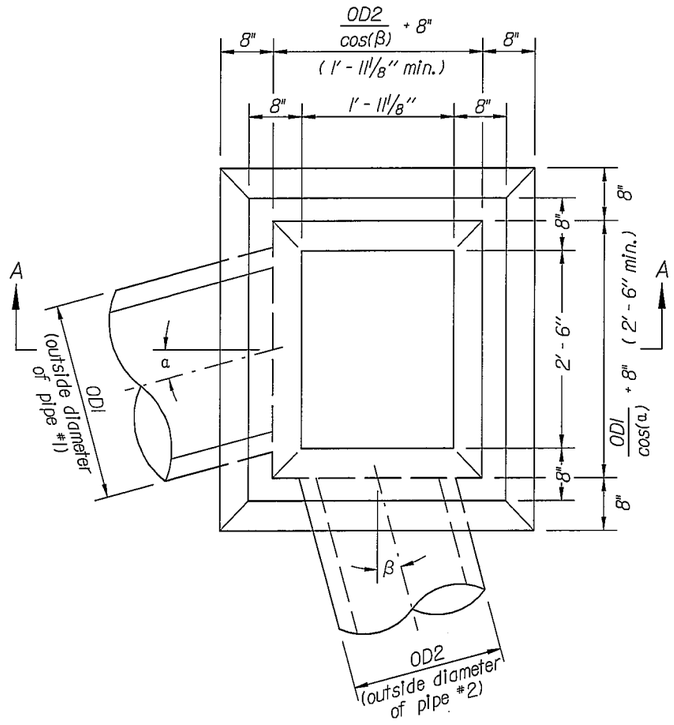

INLET, TYPE 6A

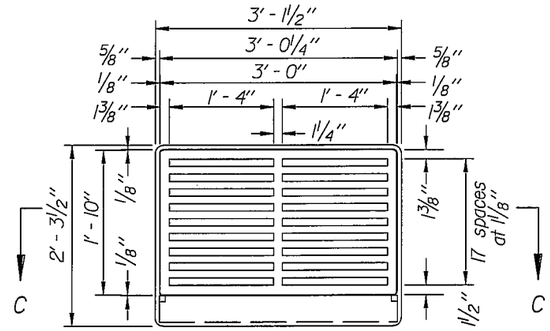

METAL FRAMES AND GRATINGS TYPE 6A

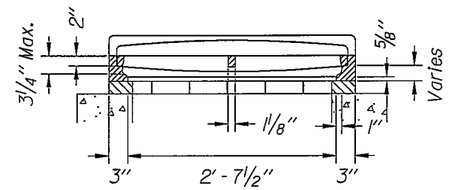

SECTION C-C

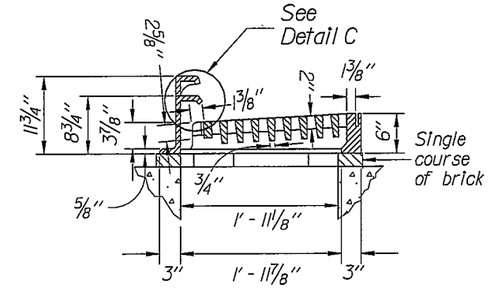

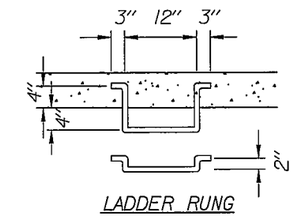

LADDER RUNG

3/4"ø or 3/4"□ Steel or Wrought Iron to be used where depth exceeds 4'-0"

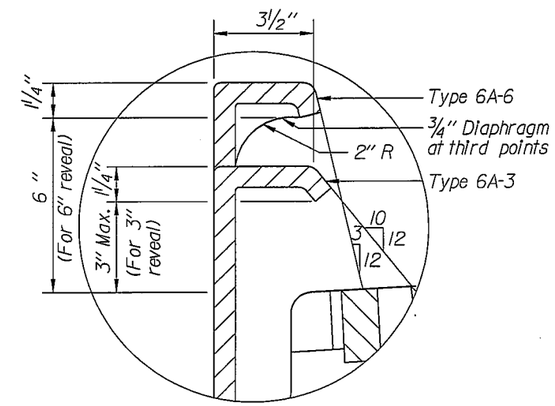

DETAIL C

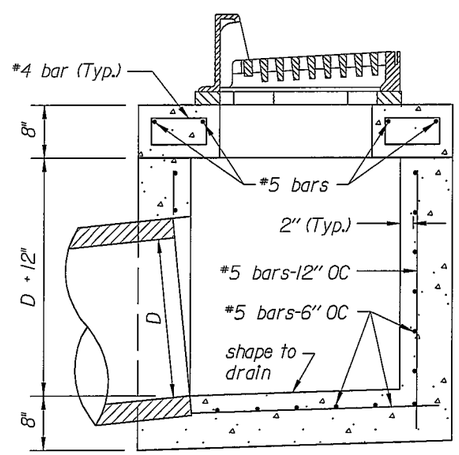

Limited Headroom
SECTION A-A

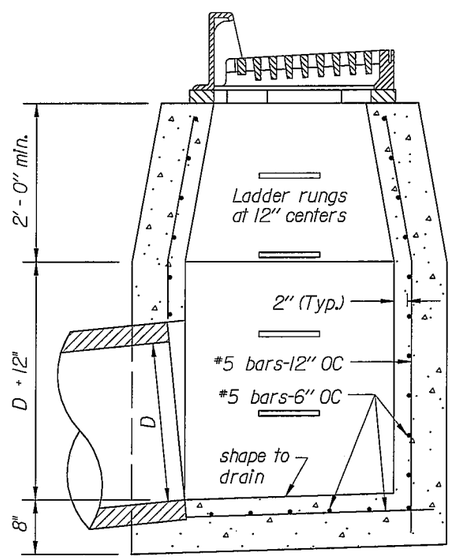

Ample Headroom
SECTION A-A

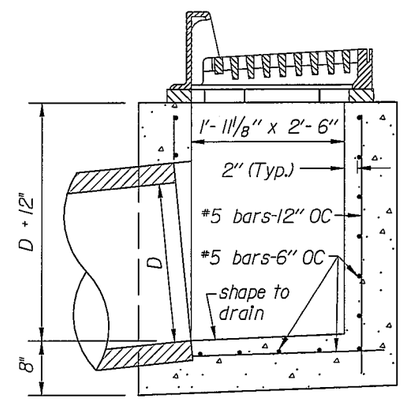

For minimum inside inlet dimensions only
SECTION A-A

Notes:

1. At the option of the Contractor walls less than 4 feet may be of concrete as shown.
2. Construct Type A inlets for pipes 24 inch and larger "For Ample Headroom", unless otherwise directed by the CO.
3. Construct inlets parallel to the roadway centerline and grade. Adapt inlets as directed by the CO.
4. For frames and gratings minor variations in design and dimensions are permitted to allow manufacturers standards.

U.S. DEPARTMENT OF TRANSPORTATION
FEDERAL HIGHWAY ADMINISTRATION
EASTERN FEDERAL LANDS HIGHWAY DIVISION

DETAIL

INLET, TYPE 6A

DETAIL APPROVED FOR USE --/----

REVISED:

DETAIL E604-5

7/10/2008 1:43:33 PM G:\tra\CT052885\TRA\FINAL_MOD_7\dt604x05.dgn

NPS NO.	REG	STATE	PROJECT	SHEET NO.	TOTAL SHEETS
601 / 43918	S.E.	NC	PRA-BLRI-2P14	144	166

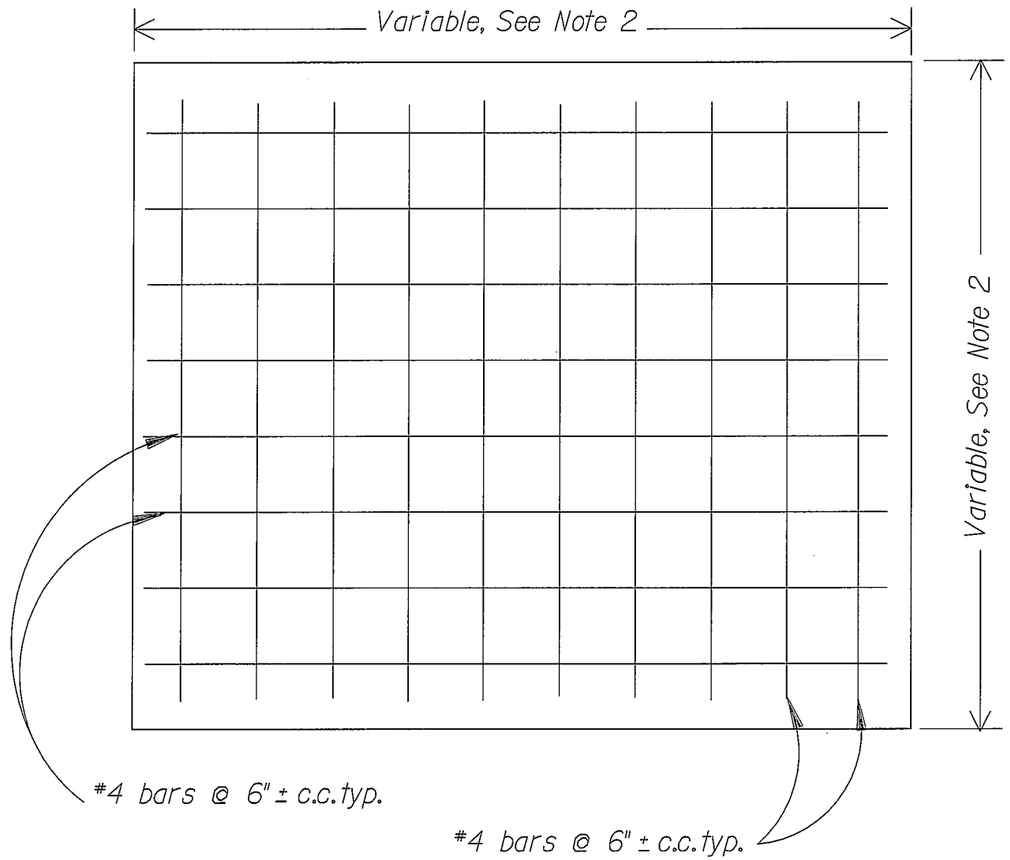

PLAN

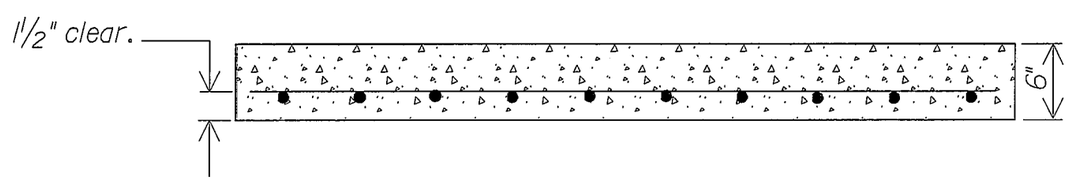

SECTION

NOTES:

1. Set concrete cap on a 2" mortar bed.
2. Field measure the length and width of the caps to completely cover the existing inlets.
3. Cut the top of the existing inlets to a depth such that 6 inches remain above the highest existing culvert tying into the inlet.
4. All reinforcing bars are to have a 1½" clearance to the outside face.

U.S. DEPARTMENT OF TRANSPORTATION
FEDERAL HIGHWAY ADMINISTRATION
EASTERN FEDERAL LANDS HIGHWAY DIVISION

DETAIL

PRECAST CONCRETE INLET CAP

DETAIL APPROVED FOR USE --/----

REVISED:

DETAIL E604-8

7/10/2008 1:43:44 PM G:\tra\CT052885\TRAVFINAL_MOD_7\df604x08.dgn

NPS NO.	REG	STATE	PROJECT	SHEET NO.	TOTAL SHEETS
601 / 43918	S.E.	NC	PRA-BLRI-2P14	145	166

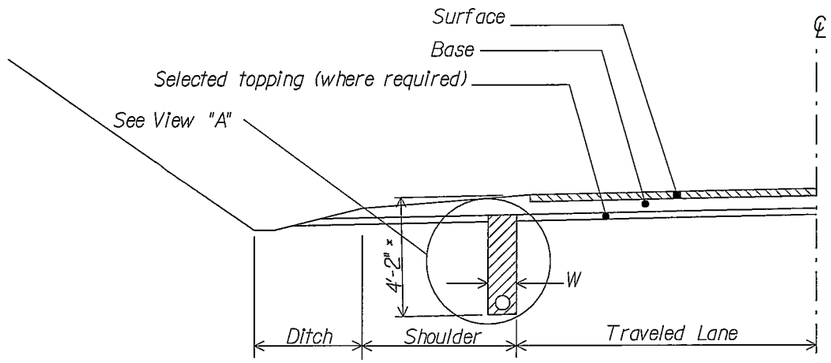

SHOULDER

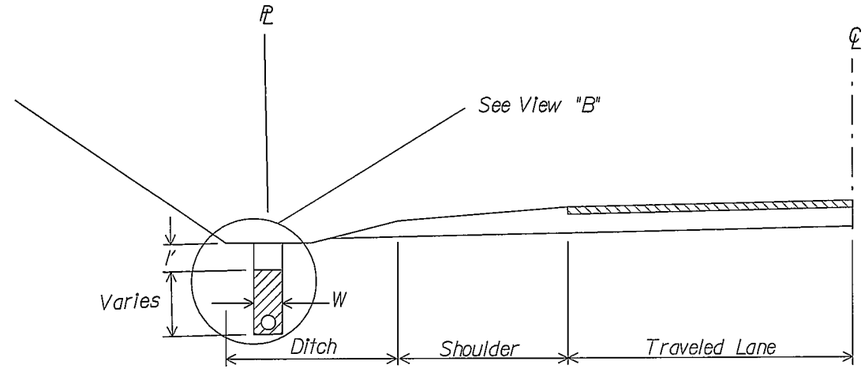

FLAT BOTTOM DITCH

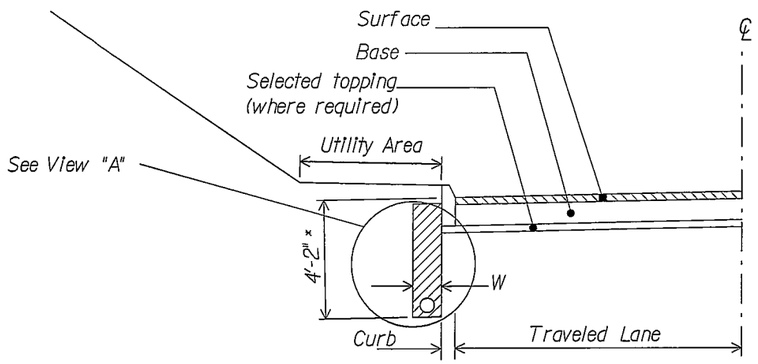

CURB AND GUTTER

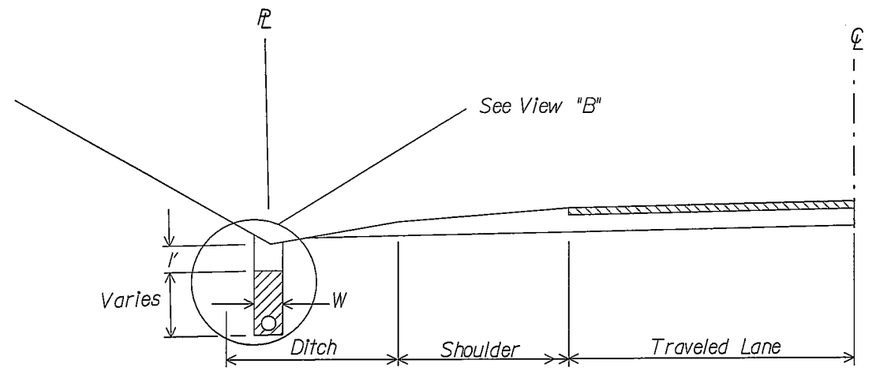

VEE DITCH

* Adjust depth to meet field conditions

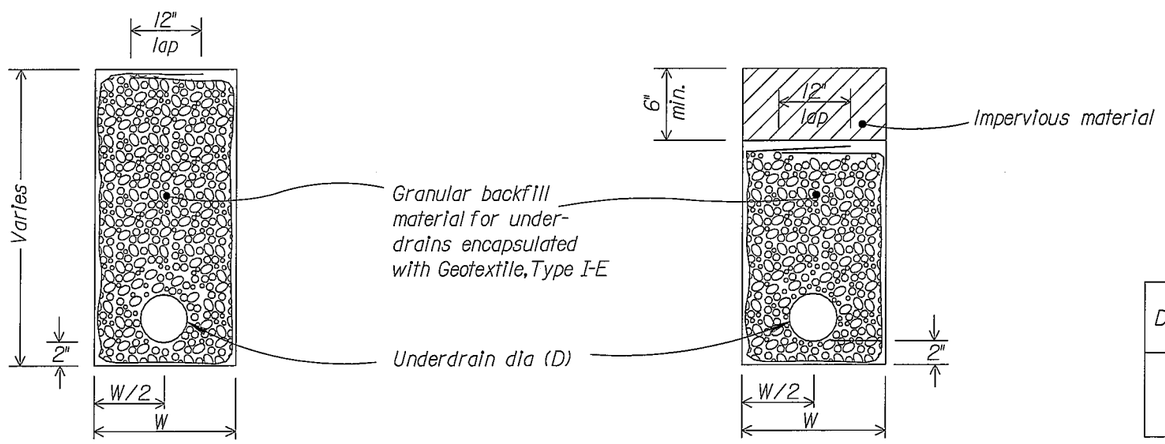

VIEW A

VIEW B

NOTES:

1. Location of pipe underdrains may be adjusted by the CO.
2. Minimum underdrain grade is 0.5 percent.

DIAMETER (D)	MINIMUM WIDTH (W)
4"	12"
6"	15"

U.S. DEPARTMENT OF TRANSPORTATION
FEDERAL HIGHWAY ADMINISTRATION
EASTERN FEDERAL LANDS HIGHWAY DIVISION

DETAIL

UNDERDRAIN, FOR PAVEMENT AND DITCHES

DETAIL APPROVED FOR USE --/----

REVISED:

DETAIL E605-1

7/10/2008 1:43:57 PM G:\tra\CT052885\TRA\FINAL_MOD_7\dl605x01.dgn

NPS NO.	REG	STATE	PROJECT	SHEET NO.	TOTAL SHEETS
601 43918	SE	NC	PRA-BLRI-2P14	146	166

RUBBLE PAVED WATERWAY

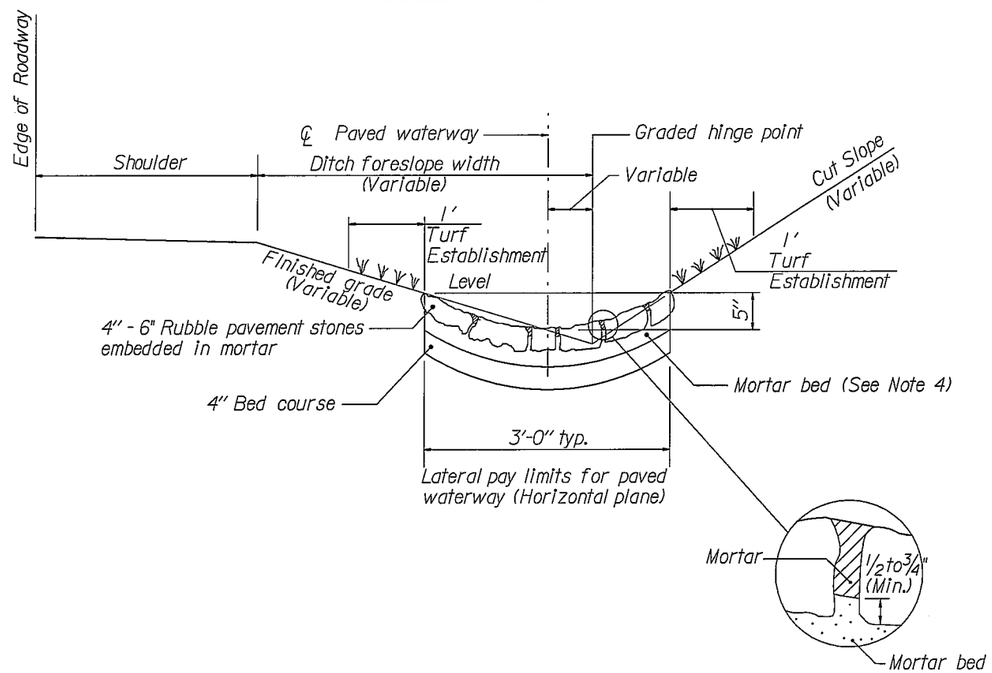

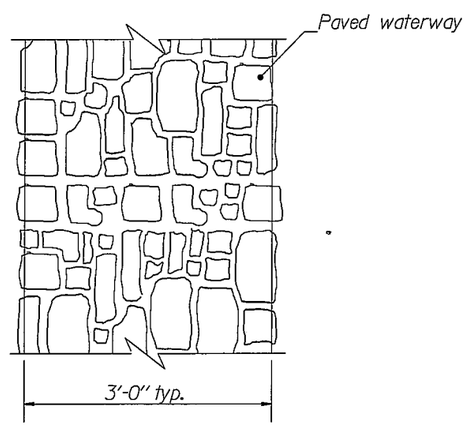

PLAN

NOTES:

1. The approximate shape of the paved waterway is an arc with a radius of 2.9 feet.
2. At inlets and other special locations, widen and shape paved waterway to drain.
3. Construct in uniform sections 20 feet in length, except closure sections are not to be less than 5 feet in length.
4. The mortared bed shall be a minimum of 4 inches in depth prior to placement of the pavement stones. The rubble pavement stones shall then be embedded in the mortar a minimum of 1/2 to 3/4 inches. After the mortar has taken its initial set, mortar shall be placed in the joints.
5. In areas where paved waterway is constructed adjacent to rock cut, waterway width shall vary as dictated by field conditions to extend to the base of the rock cut.

U.S. DEPARTMENT OF TRANSPORTATION
FEDERAL HIGHWAY ADMINISTRATION
EASTERN FEDERAL LANDS HIGHWAY DIVISION

DETAIL

PAVED WATERWAY, TYPE 2

DETAIL APPROVED FOR USE:

REVISED:

DETAIL E608-A

7/10/2008 1:44:22 PM G:\traCT052885\TRA\FINAL_MOD_7\dt608x03.dgn

NPS NO.	REG	STATE	PROJECT	SHEET NO.	TOTAL SHEETS
601 / 43918	S.E.	NC	PRA-BLRI-2P14	147	166

DRAINAGE CHUTE

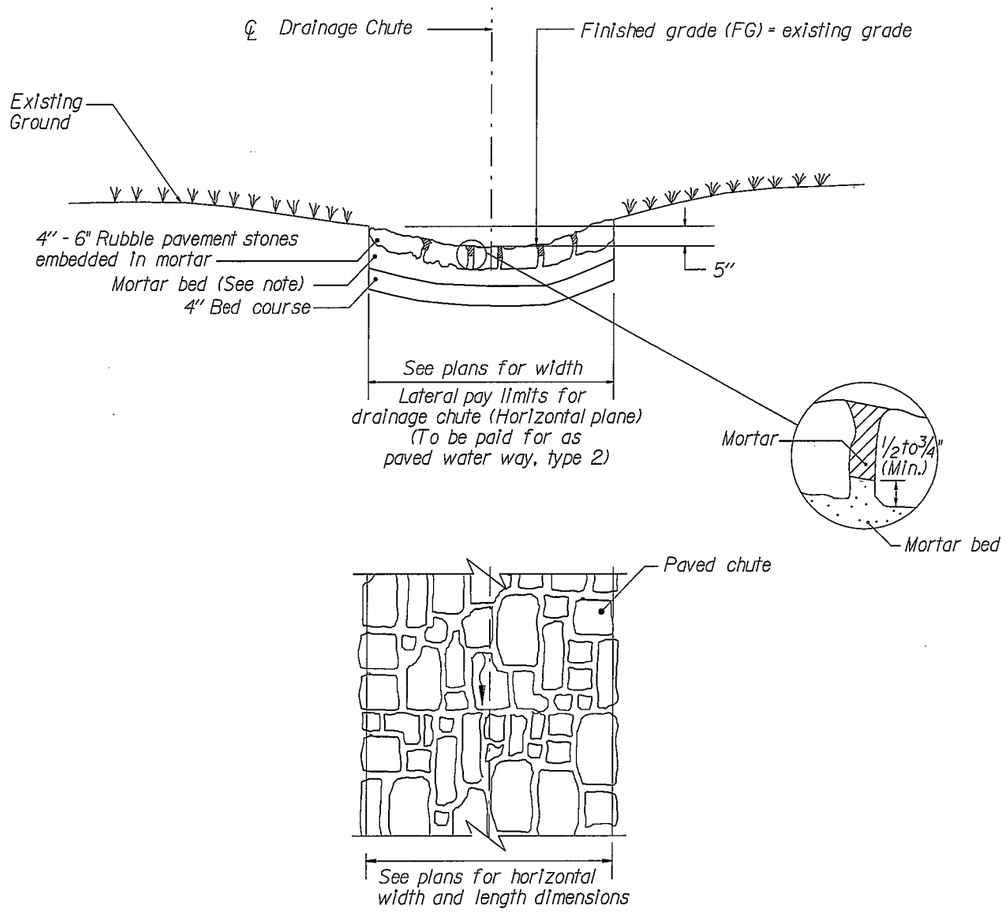

PLAN

STONE MEDIAN

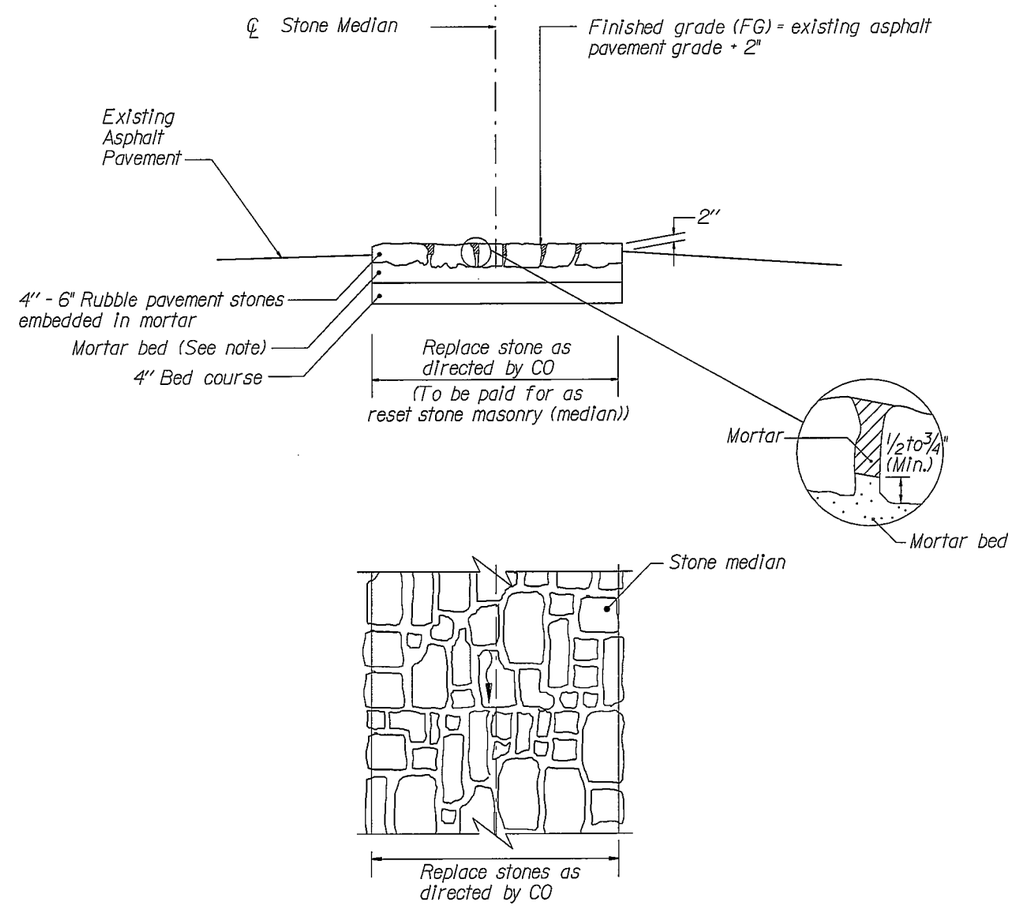

PLAN

Note: The mortared bed shall be a minimum of 4 inches in depth prior to placement of the pavement stones. The rubble pavement stones shall then be embedded in the mortar a minimum of 1/2 to 3/4 inches. After the mortar has taken its initial set, mortar shall be placed in the joints.

U.S. DEPARTMENT OF TRANSPORTATION
FEDERAL HIGHWAY ADMINISTRATION
EASTERN FEDERAL LANDS HIGHWAY DIVISION

DETAIL

DRAINAGE CHUTE, STONE MEDIAN

DETAIL APPROVED FOR USE --/----

REVISED:

DETAIL E608-B

7/10/2008 1:44:33 PM G:\Proj\CT052885\TRAVFINAL_MOD_7\dt608x04.dgn

NPS NO.	REG	STATE	PROJECT	SHEET NO.	TOTAL SHEETS
601 / 43918	S.E.	NC	PRA-BLRI-2P14	148	166

NOTE:

1. Cleaning waterway and sealing cracks is included in the measurement of overlaying paved waterway.

2. In areas where paved waterway is constructed adjacent to rock cut, waterway width shall vary as dictated by field conditions to extend to the base of the rock cut.

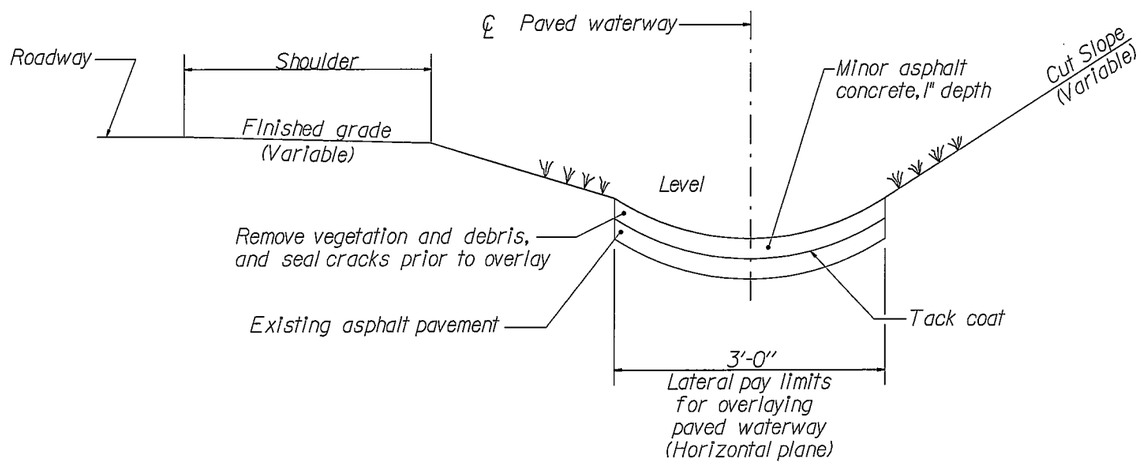

PAVED WATERWAY

NOT TO SCALE

U.S. DEPARTMENT OF TRANSPORTATION
FEDERAL HIGHWAY ADMINISTRATION
EASTERN FEDERAL LANDS HIGHWAY DIVISION

DETAIL

PAVED WATERWAY
ASPHALT OVERLAY

DETAIL APPROVED FOR USE --/----

REVISED:

DETAIL
E608-C

7/10/2008 1:44:10 PM G:\Vro\CT052885\TRAVFINAL_MOD_7\dt608x02.dgn

NPS NO.	REG	STATE	PROJECT	SHEET NO.	TOTAL SHEETS
601 / 43918	S.E.	NC	PRA-BLRI-2P14	149	166

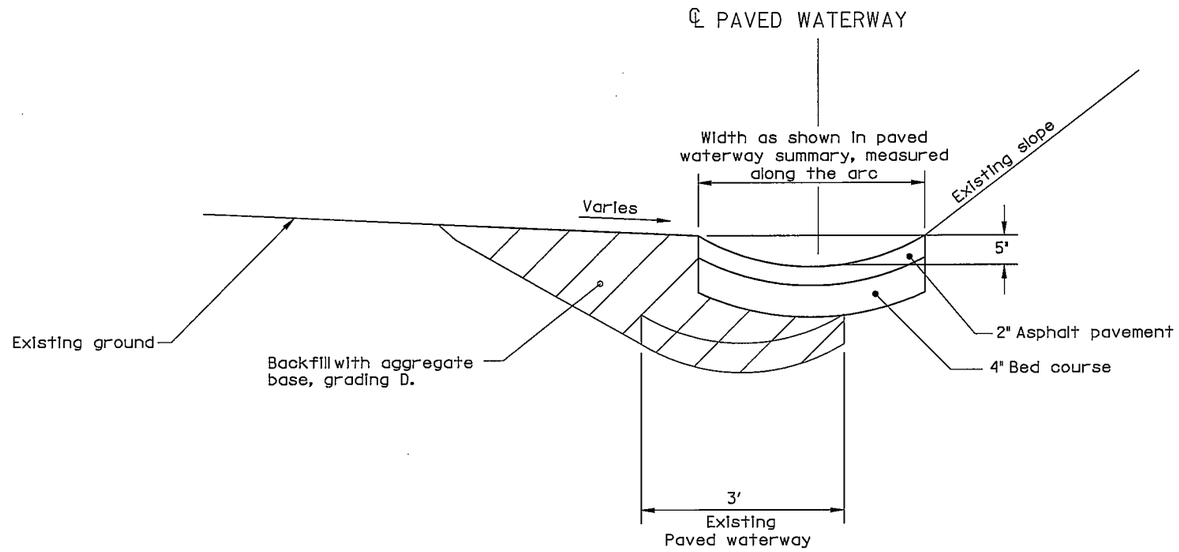

CONSTRUCTING PAVED WATERWAY, TYPE 5 AT RAISED SHOULDER DETAIL

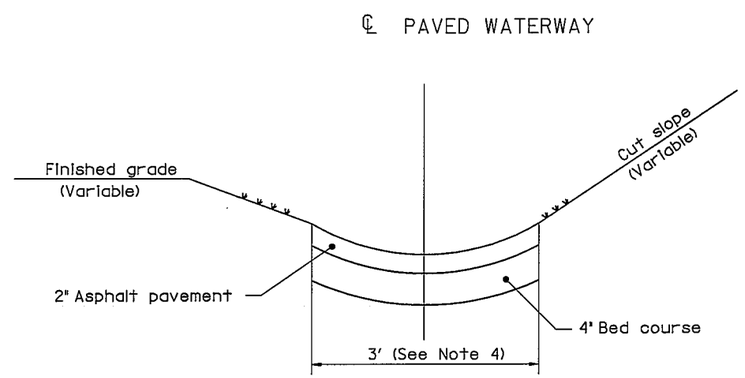

PAVED WATERWAY, TYPE 5 DETAIL

NOTES:

1. Unless otherwise shown, dimensions are in inches.
2. The approximate shape of the paved waterway is an arc with a radius of 2.9'.
3. At inlets and other special locations, widen and shape paved waterway to drain.
4. In areas where paved waterway is constructed adjacent to rock cut, waterway width shall vary as dictated by field conditions to extend to the base of the rock cut

U.S. DEPARTMENT OF TRANSPORTATION
FEDERAL HIGHWAY ADMINISTRATION
EASTERN FEDERAL LANDS HIGHWAY DIVISION
STERLING, VIRGINIA

DETAIL

PAVED WATERWAY, TYPE 5

DATE: NO SCALE

DETAIL E608-D

NPS NO.	REG	STATE	PROJECT	SHEET NO.	TOTAL SHEETS
601 43918	SE	NC	PRA-BLRI-2P14	150	166

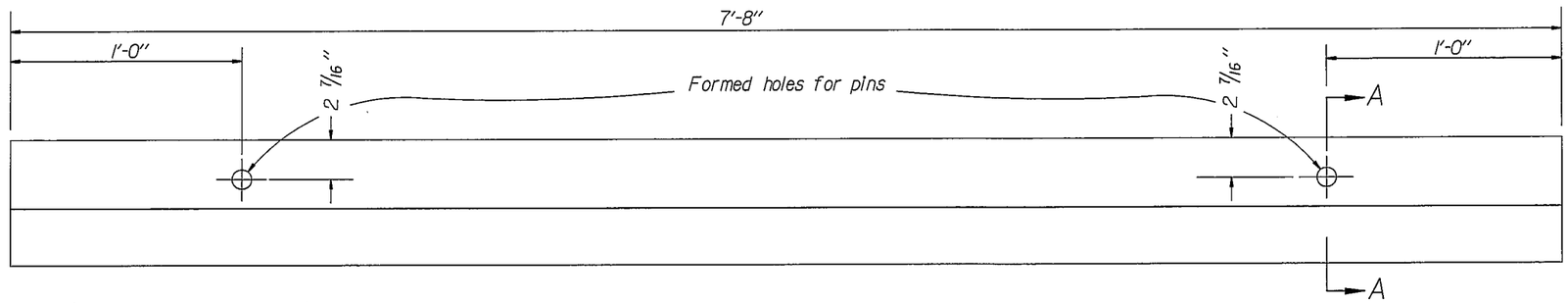

Note:

1. Center wheel stops between, and perpendicular to, stall lines.
2. Variations in wheel stops will be allowed with the approval of the CO to meet manufacturer's standards.

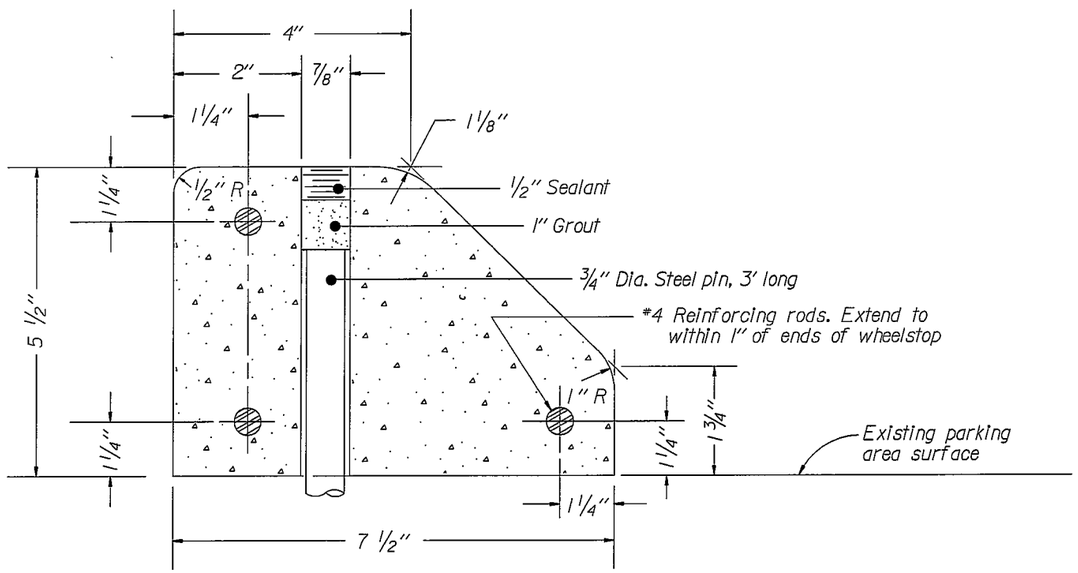

SECTION A-A

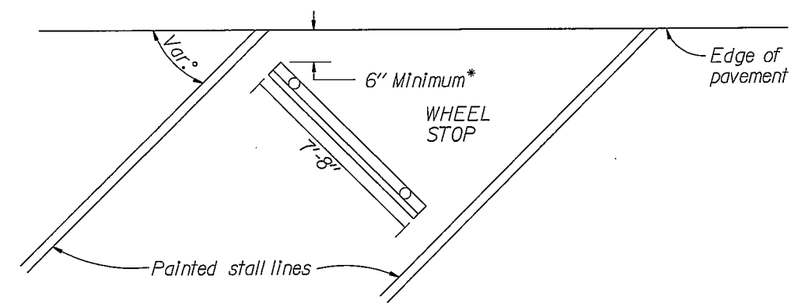

ANGULAR PARKING

*Increase distance for walls or other obstructions, as directed by the CO.

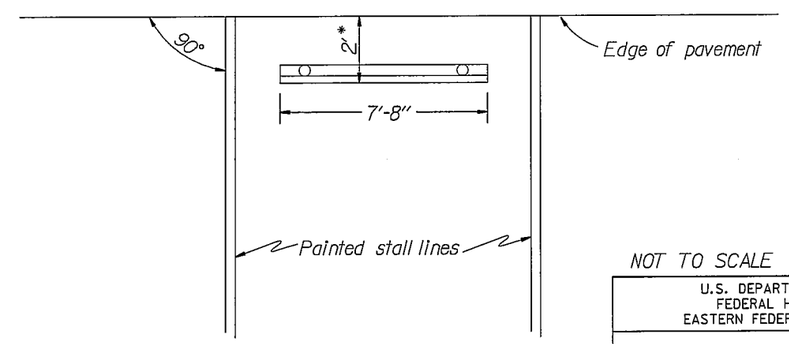

HEAD-ON PARKING

NOT TO SCALE

U.S. DEPARTMENT OF TRANSPORTATION
FEDERAL HIGHWAY ADMINISTRATION
EASTERN FEDERAL LANDS HIGHWAY DIVISION

DETAIL

CONCRETE WHEELSTOP

DETAIL APPROVED FOR USE --/----

REVISED:

DETAIL E609-2

7/10/2008 1:45:06 PM G:\Nro\CT052885\TRA\FINAL_MOD_7\df609x02.dgn

NPS NO.	REG	STATE	PROJECT	SHEET NO.	TOTAL SHEETS
601 / 43918	SE	NC	PRA-BLRI-2P14	151	166

Note:

1. Place 3-inches, minimum aggregate bed course under all curb and gutter.

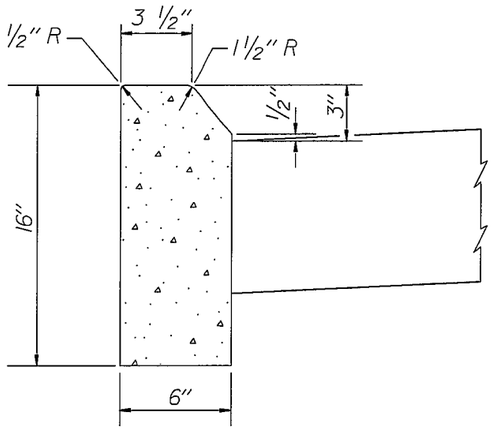

16-INCH DEPTH
(MOUNTABLE)

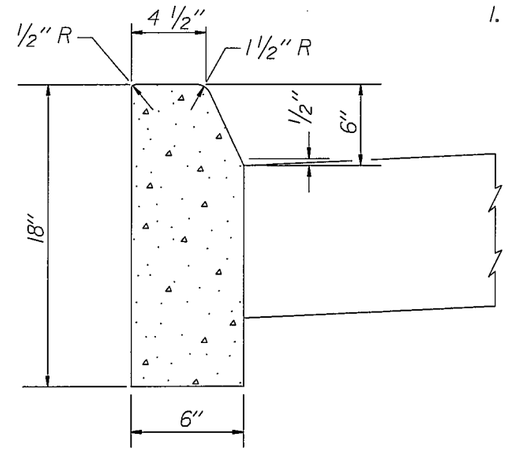

18-INCH DEPTH
(NON- MOUNTABLE)

PORTLAND CEMENT CONCRETE CURB

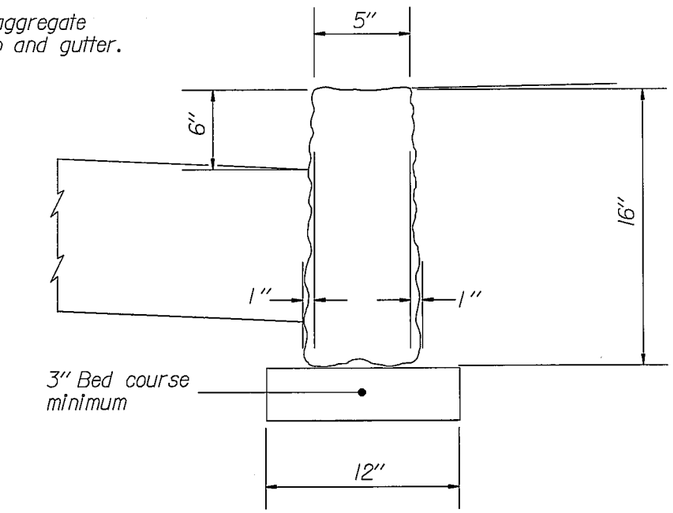

STONE CURB
16-INCH DEPTH
(NON-MOUNTABLE)

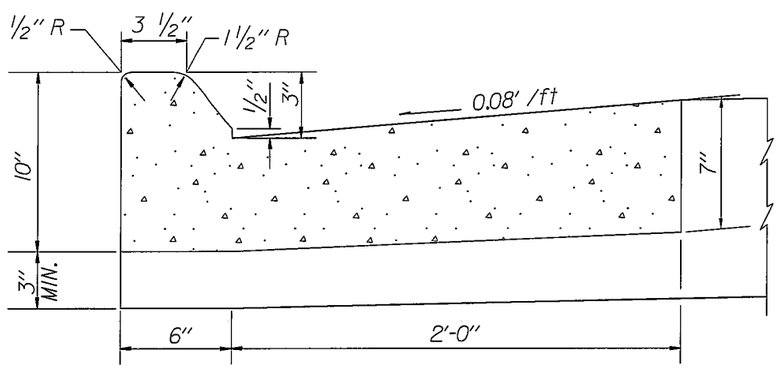

10-INCH DEPTH
(MOUNTABLE)

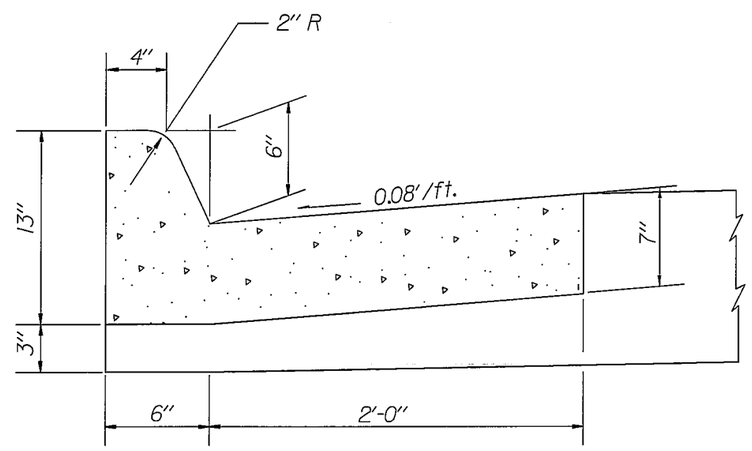

13-INCH DEPTH
(NON- MOUNTABLE)

PORTLAND CEMENT CONCRETE CURB AND GUTTER

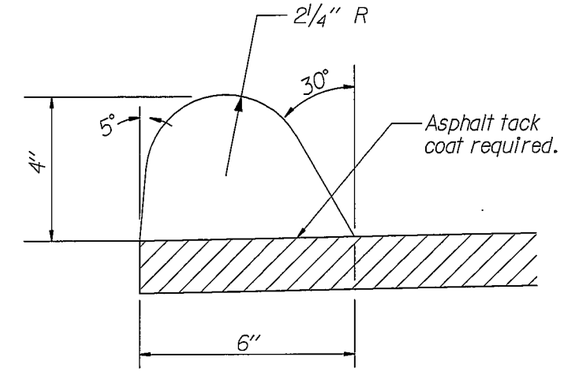

ASPHALT CONCRETE CURB
5-INCH DEPTH
(NON-MOUNTABLE)

Asphalt tack coat may be rapid curing liquid asphalt or emulsified asphalt.

NOT TO SCALE

U.S. DEPARTMENT OF TRANSPORTATION
FEDERAL HIGHWAY ADMINISTRATION
EASTERN FEDERAL LANDS HIGHWAY DIVISION

DETAIL

CURBS

DETAIL APPROVED FOR USE XX/XX

REVISED: XX/XX

DETAIL
E609-A

7/10/2008 1:44:56 PM G:\Ira\CT052885\TRA\FINAL_MOD_7\dt609x01.dgn

NPS NO.	REG	STATE	PROJECT	SHEET NO.	TOTAL SHEETS
601 / 43918	SE	NC	PRA-BLRI-2P14	152	

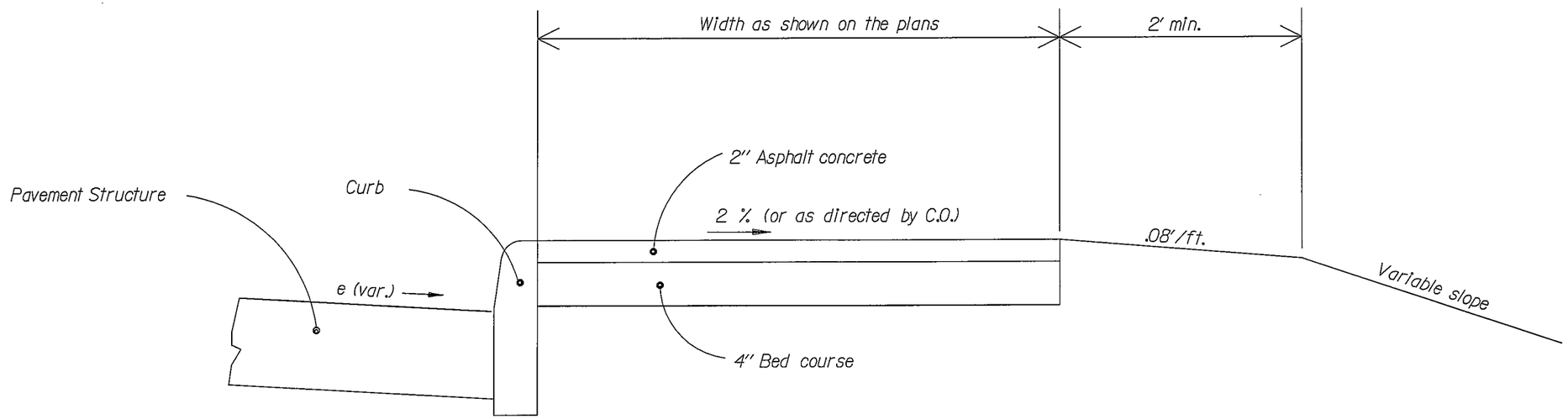

SIDEWALK WITH CURB

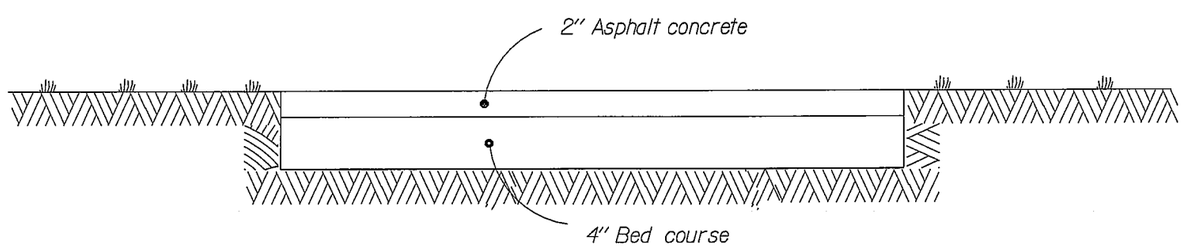

SIDEWALK

NOT TO SCALE

U.S. DEPARTMENT OF TRANSPORTATION
FEDERAL HIGHWAY ADMINISTRATION
EASTERN FEDERAL LANDS HIGHWAY DIVISION

DETAIL

ASPHALT CONCRETE SIDEWALK

DETAIL APPROVED FOR USE XX/XX

REVISED: XX/XX

DETAIL E615-A

7/10/2008 1:45:15 PM G:\ro\GT052885\TRA\FINAL_MOD_7\dt615x02.dgn

NPS NO.	REG	STATE	PROJECT	SHEET NO.	TOTAL SHEETS
601 43918	SE	NC	PRA-BLRI-2P14	153	166

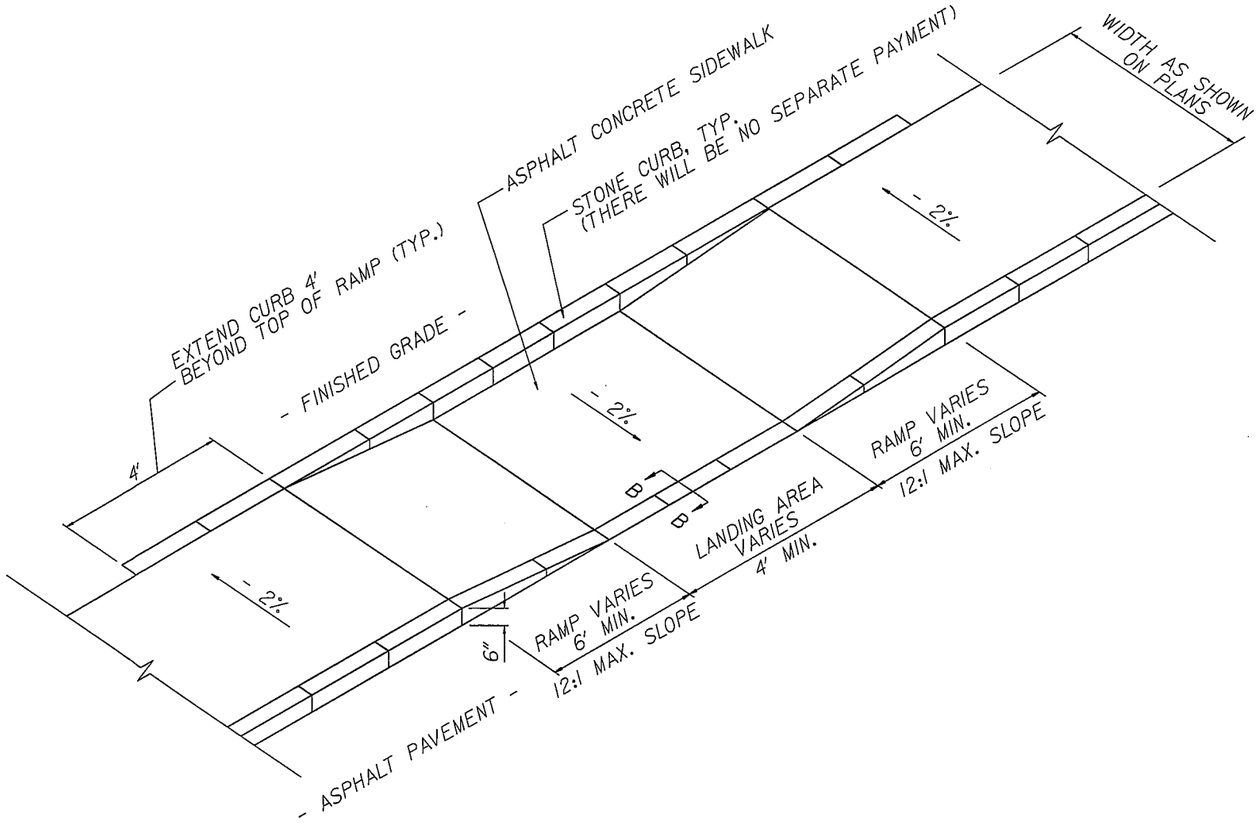

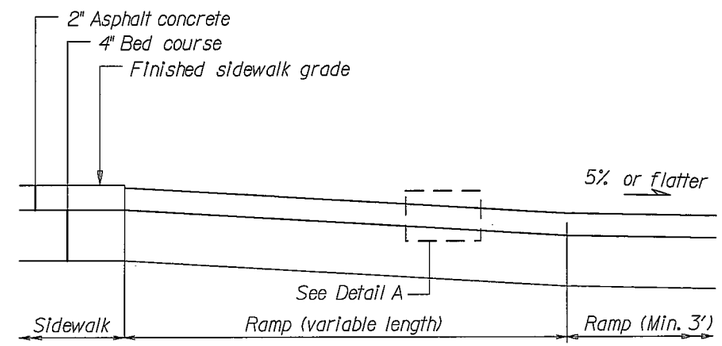

RAMP - TYPICAL SECTION

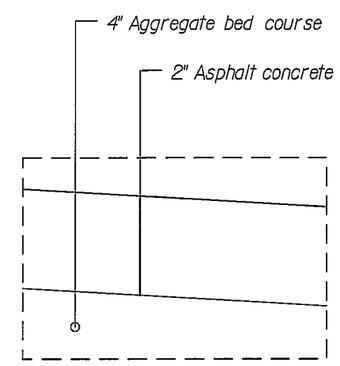

DETAIL A

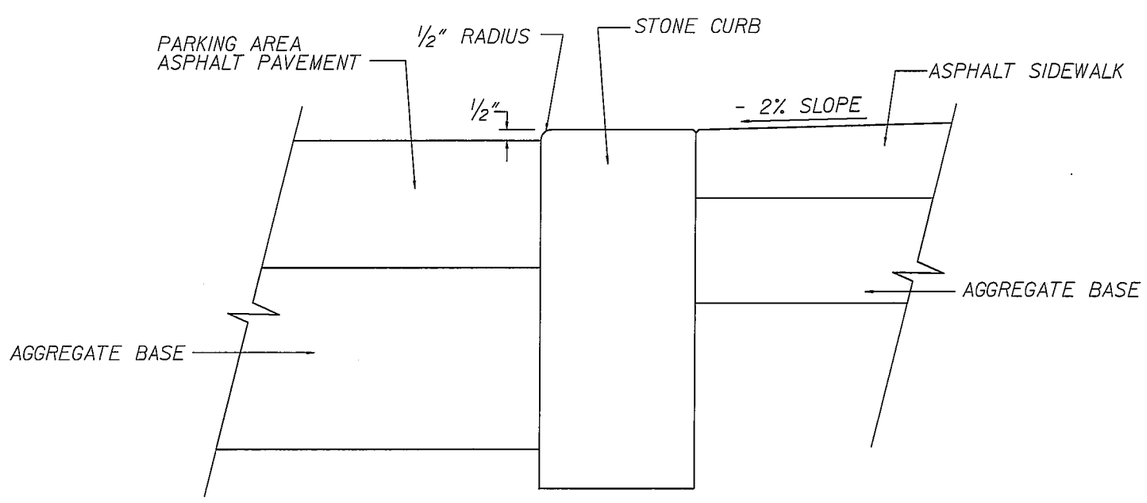

SECTION B-B

NOT TO SCALE

U.S. DEPARTMENT OF TRANSPORTATION
FEDERAL HIGHWAY ADMINISTRATION
EASTERN FEDERAL LANDS HIGHWAY DIVISION

DETAIL
WHEEL CHAIR RAMP
CURB CUT

DETAIL APPROVED FOR USE XX/XX
REVISED:

DETAIL
E615-B

7/10/2008 1:45:25 PM G:\Proj\CT052885\TRA\FINAL_MOD_7\dt615x03a.dgn

NPS NO.	REG	STATE	PROJECT	SHEET NO.	TOTAL SHEETS
601 / 43918	SE	NC	PRA-BLRI-2P14	154	166

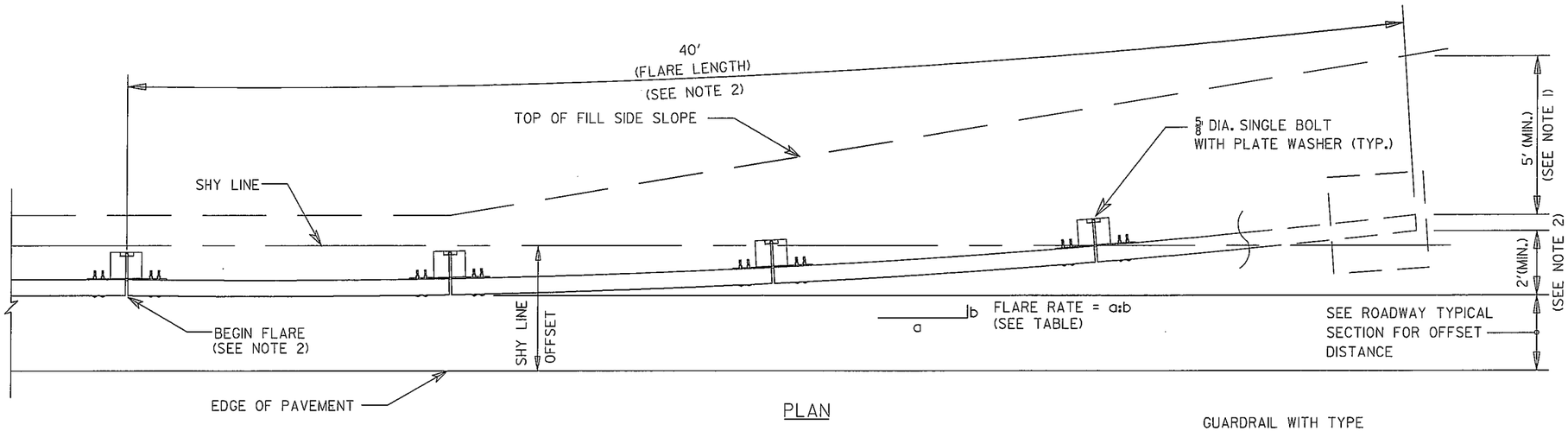

PLAN

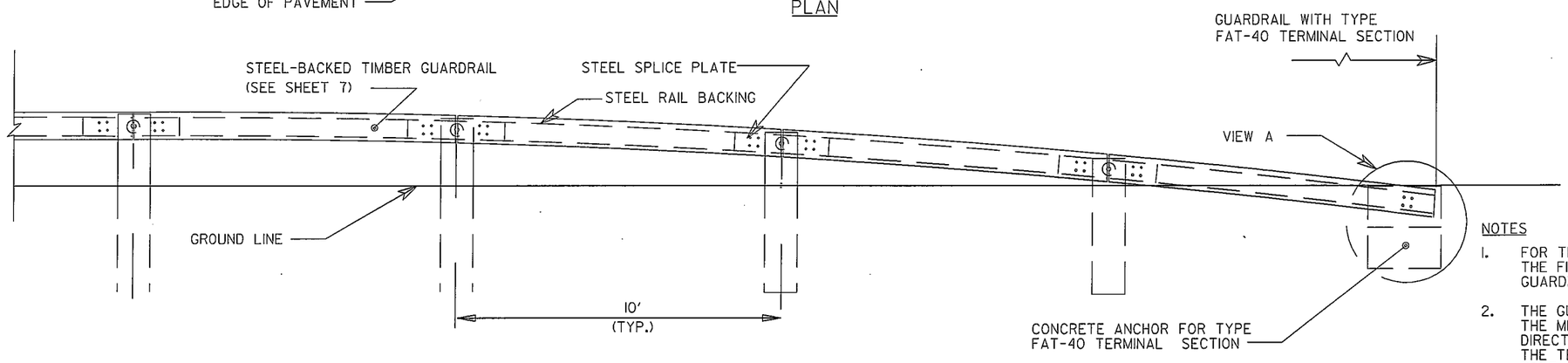

ELEVATION

NOTES

1. FOR THE TYPE FAT-40 TERMINAL SECTION, EXTEND THE FILL WIDENING A MINIMUM OF 5 FEET BEHIND THE GUARDRAIL, UNLESS OTHERWISE DIRECTED BY THE CO.

2. THE GUARDRAIL FLARE SHOWN IN THE PLAN VIEW IS THE MINIMUM LENGTH AND RATE REQUIRED. AS DIRECTED BY THE CO, FLARE THE GUARDRAIL SO THAT THE TERMINAL SECTION IS OUTSIDE THE CLEAR ZONE. IF THE TERMINAL SECTION CANNOT BE LOCATED OUTSIDE THE CLEAR ZONE. IT SHOULD BE FLARED AS FAR AS PRACTICAL FROM THE ROAD AT THE MAXIMUM RATE INDICATED ON THE GUARDRAIL FLARE RATES TABLE.

3. SEE STD. 617-60, STEEL-BACKED TIMBER GUARDRAIL, FOR TIMBER, STRUCTURAL STEEL, AND HARDWARE DETAILS.

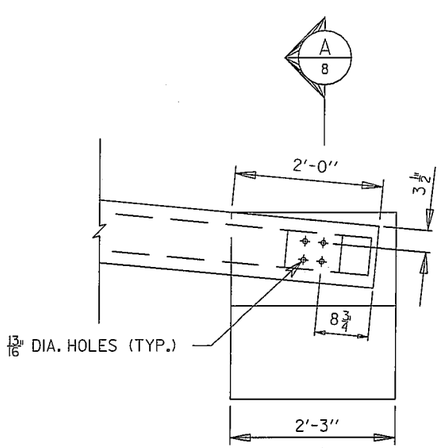

VIEW A

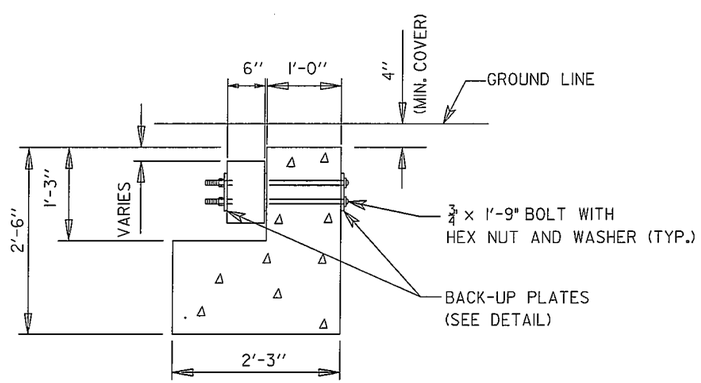

A/8 SECTION

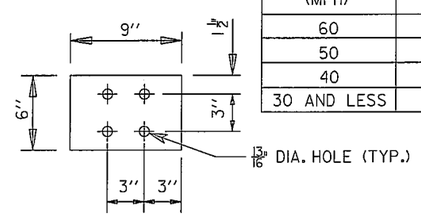

BACK-UP PLATE DETAIL

6" x 1/2" x 9"

GUARDRAIL FLARE RATES

DESIGN SPEED (MPH)	SHY LINE OFFSET (FT)	FLARE RATE INSIDE SHY LINE (a:b)	FLARE RATE OUTSIDE SHY LINE (a:b)
60	8.0	26:1	14:1
50	6.5	21:1	11:1
40	5.0	16:1	8:1
30 AND LESS	3.5	13:1	7:1

NO SCALE

U.S. DEPARTMENT OF TRANSPORTATION
FEDERAL HIGHWAY ADMINISTRATION
EASTERN FEDERAL LANDS HIGHWAY DIVISION

DETAIL

STEEL-BACKED TIMBER GUARDRAIL
TERMINAL SECTION, TYPE FAT-40

DETAIL APPROVED FOR USE:

REVISED:

DETAIL
E617-1

7/16/2008 2:36:27 PM G:\tra\CT052885\TRAVFINAL_MOD_7\df617xA.dgn

STATE	PROJECT	SHEET NUMBER
NC	PRA-BLRI 2P14	155

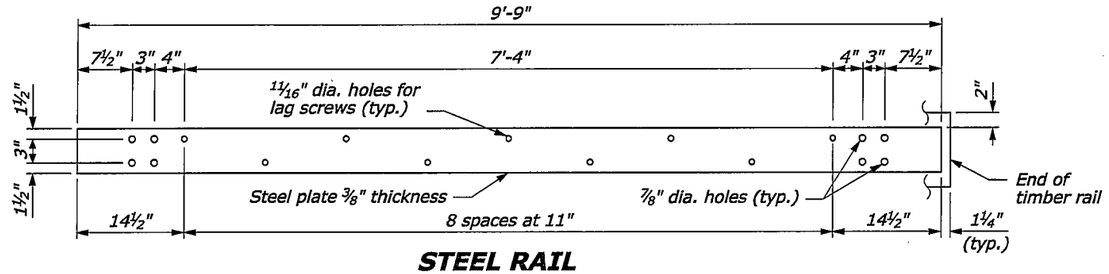

STEEL RAIL

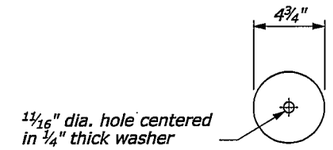

PLATE WASHER

NOTE:

1. Use the Type A, blocked-out, system or the Type B, non-blocked-out, system as specified in the plans.
2. Use weathering steel for all structural steel and fastener hardware as specified.
3. Place a terminal section (See Standards 617-61 and 617-62) on both approach and trailing ends of barrier installations.

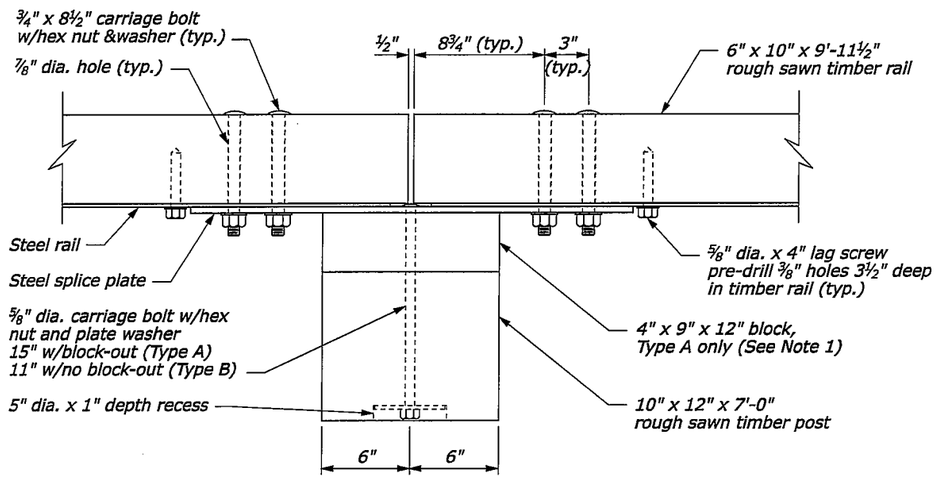

PLAN

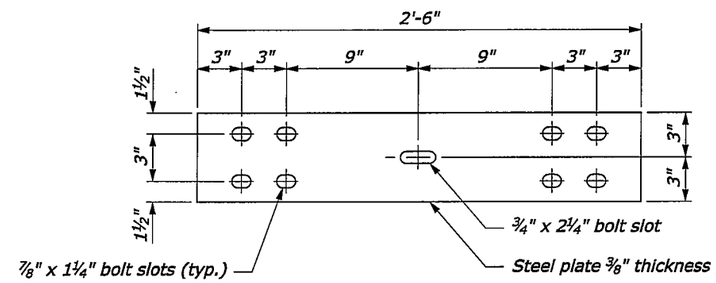

STEEL SPLICE PLATE

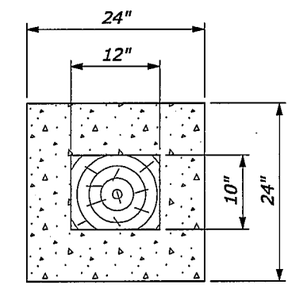

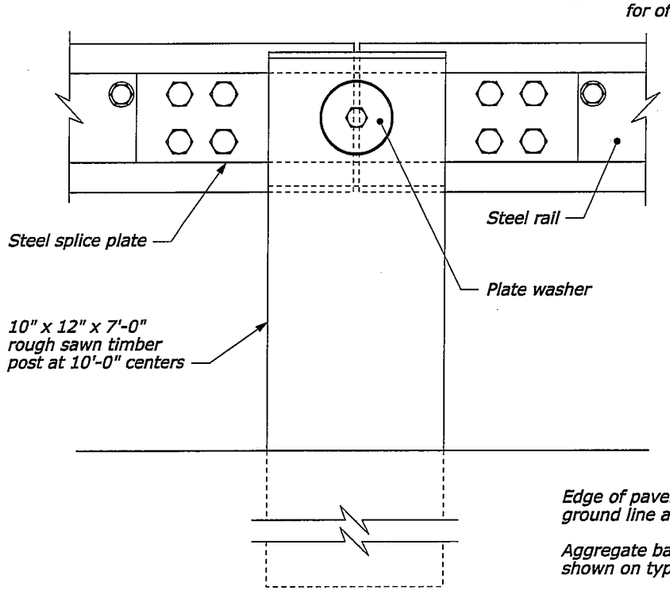

ELEVATION

POST CONNECTION

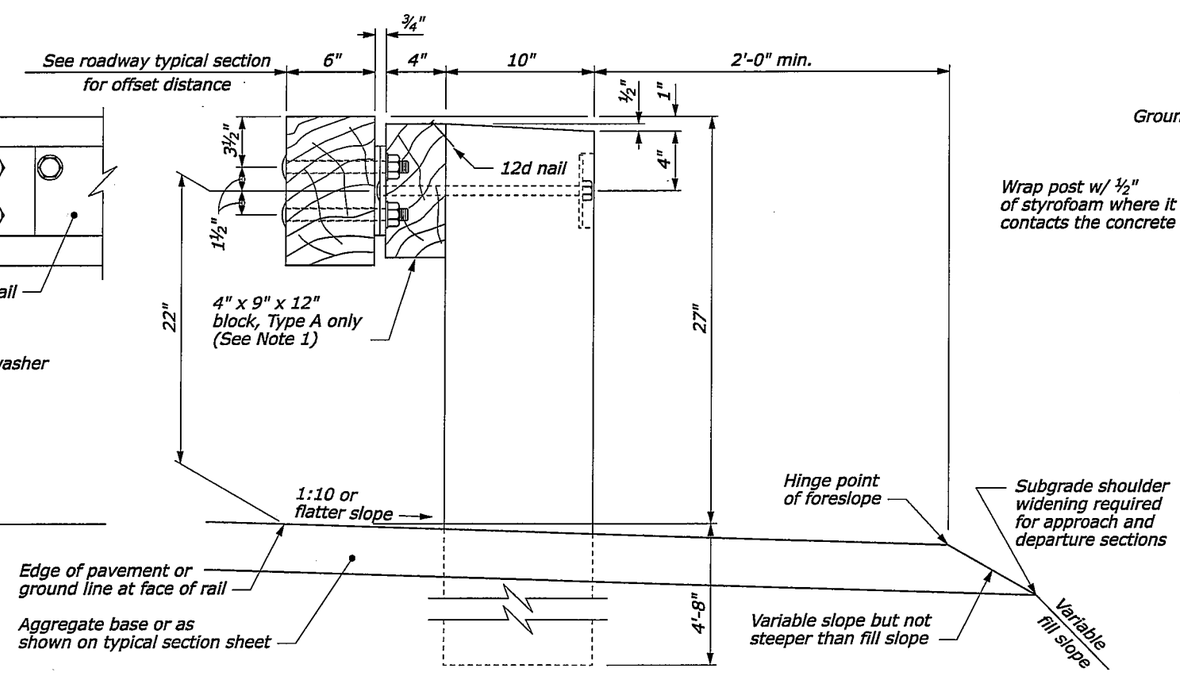

TYPICAL GUARDRAIL CROSS SECTION

NO SCALE

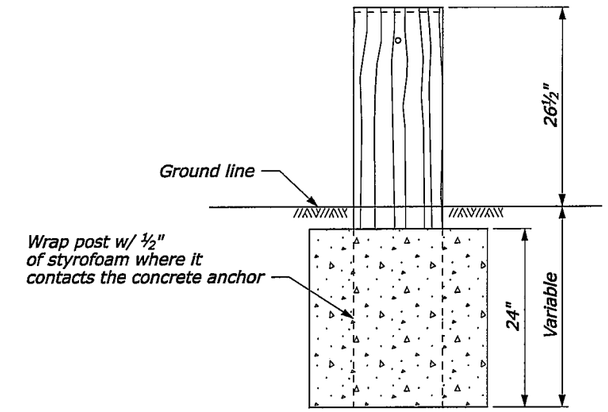

24" dia. round anchor is an acceptable alternative.
Reduced size acceptable in solid rock.

CONCRETE ANCHOR FOR SHORT GUARDRAIL POST

U.S. DEPARTMENT OF TRANSPORTATION
FEDERAL HIGHWAY ADMINISTRATION
FEDERAL LANDS HIGHWAY

U.S. CUSTOMARY STANDARD

STEEL-BACKED TIMBER GUARDRAIL TYPE A & TYPE B

STANDARD APPROVED FOR USE 3/1990
REVISED: 4/1994 6/2005

STANDARD 617-60

20-Sep-2007 06:42 AM
F:\StandDraw\st61760.dgn [US Customary]

NPS NO.	REG	STATE	PROJECT	SHEET NO.	TOTAL SHEETS
601 / 43918	S.E.	NC	PRA-BLRI-2P14	156	166

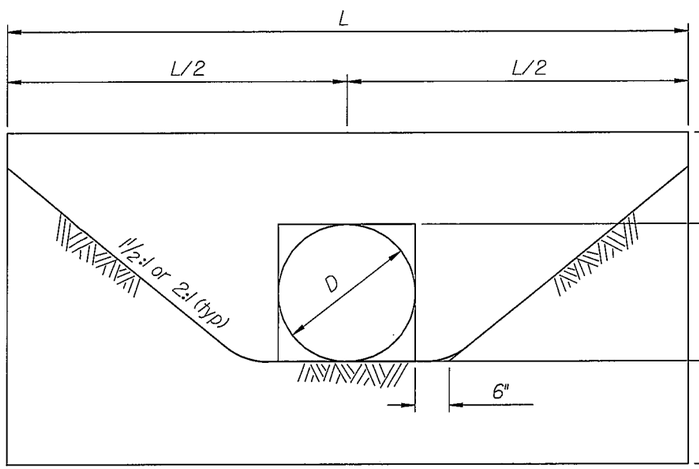

ELEVATION - SINGLE

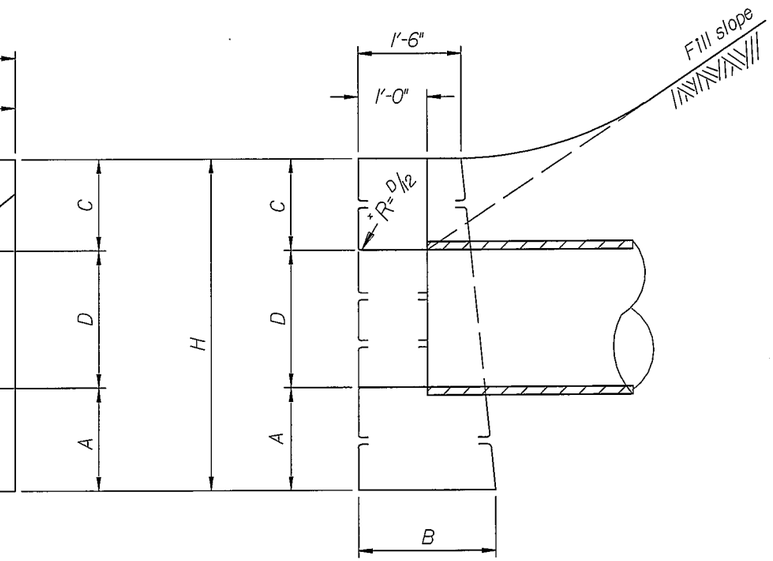

SECTION A-A
(*Inlet end Only)

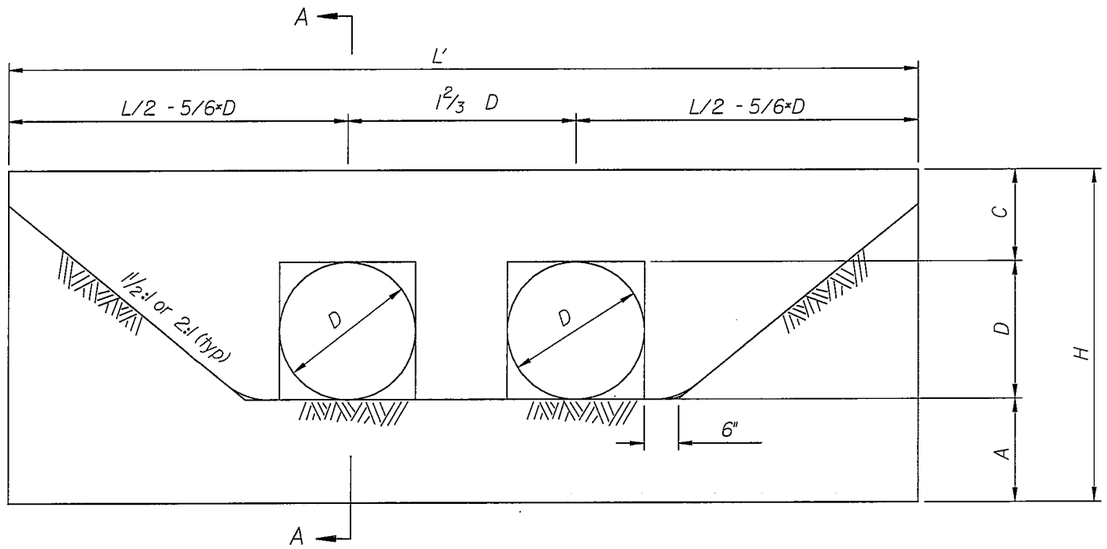

ELEVATION - DOUBLE

	VALUES FOR 1½:1 SLOPES								VALUES FOR 2:1 SLOPES							
	SINGLE				DOUBLE				SINGLE				DOUBLE			
D (In.)	18"	24"	30"	36"	18"	24"	30"	36"	18"	24"	30"	36"	18"	24"	30"	36"
L or L'	7'-0"	10'-0"	13'-0"	16'-0"	9'-6"	13'-4"	17'-2"	21'-0"	8'-6"	12'-4"	16'-2"	20'-0"	11'-0"	15'-8"	20'-4"	25'-0"
H	3'-9"	4'-10"	5'-11"	7'-0"	3'-9"	4'-10"	5'-11"	7'-0"	3'-9"	4'-10"	5'-11"	7'-0"	3'-9"	4'-10"	5'-11"	7'-0"
B	1'-9"	2'-0"	2'-5"	2'-10"	1'-9"	2'-0"	2'-5"	2'-10"	1'-9"	2'-0"	2'-5"	2'-10"	1'-9"	2'-0"	2'-5"	2'-10"
A (min.)	1'-3"	1'-6"	1'-9"	2'-0"	1'-3"	1'-6"	1'-9"	2'-0"	1'-3"	1'-6"	1'-9"	2'-0"	1'-3"	1'-6"	1'-9"	2'-0"
C	1'-0"	1'-4"	1'-8"	2'-0"	1'-0"	1'-4"	1'-8"	2'-0"	1'-0"	1'-4"	1'-8"	2'-0"	1'-0"	1'-4"	1'-8"	2'-0"
Stone(CY)	1.45	2.87	5.14	8.28	1.89	3.66	6.47	10.37	1.78	3.60	6.50	10.53	2.22	4.39	7.83	12.62

Notes:

1. All headwalls are oriented parallel to the roadway centerline unless otherwise indicated on the plans or by the CO.
2. When pipes are on skew, adapt and lengthen headwalls as directed.
3. Quantities shown in the table are for one headwall with pipe at right angles.
4. Construct headwalls using the dimensions shown under values for 1½:1 slopes unless otherwise designated by the CO.

U.S. DEPARTMENT OF TRANSPORTATION
FEDERAL HIGHWAY ADMINISTRATION
EASTERN FEDERAL LANDS HIGHWAY DIVISION

DETAIL

STONE MASONRY HEADWALLS FOR SMALL PIPE CULVERTS

DETAIL APPROVED FOR USE --/----

REVISED: 04/00

DETAIL E620-1

7/10/2008 1:46:08 PM G:\tra\CT052885\TRA\FINAL_MOD_7\dt620x01.dgn

NPS NO.	REG	STATE	PROJECT	SHEET NO.	TOTAL SHEETS
601 / 43918	S.E.	NC	PRA-BLRI-2P14	157	166

Install matting along the bottom of all ditches and up the side slopes as follows:

Step 1: Bury the top end of the mat strip in a trench 6" or more in depth.

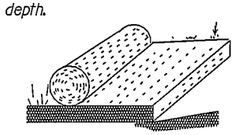

Step 2: Tamp the trench full of soil. Secure with row of fasteners: 6" spacing, 4" down from the trench.

Step 3: Overlap- bury upper end of lower strip as in (1) and (2). Overlap end of top strip 4" and fasten.

Step 4: Erosion stop (check slot): Every 50 ft, bury fold of mat in slit trench and tamp; fasten with double row of fasteners. See Section A-A

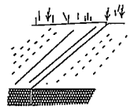

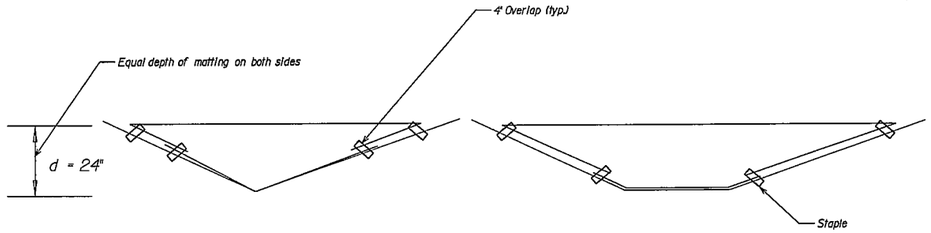

CROSS SECTION THROUGH V AND FLAT BOTTOM DITCHES

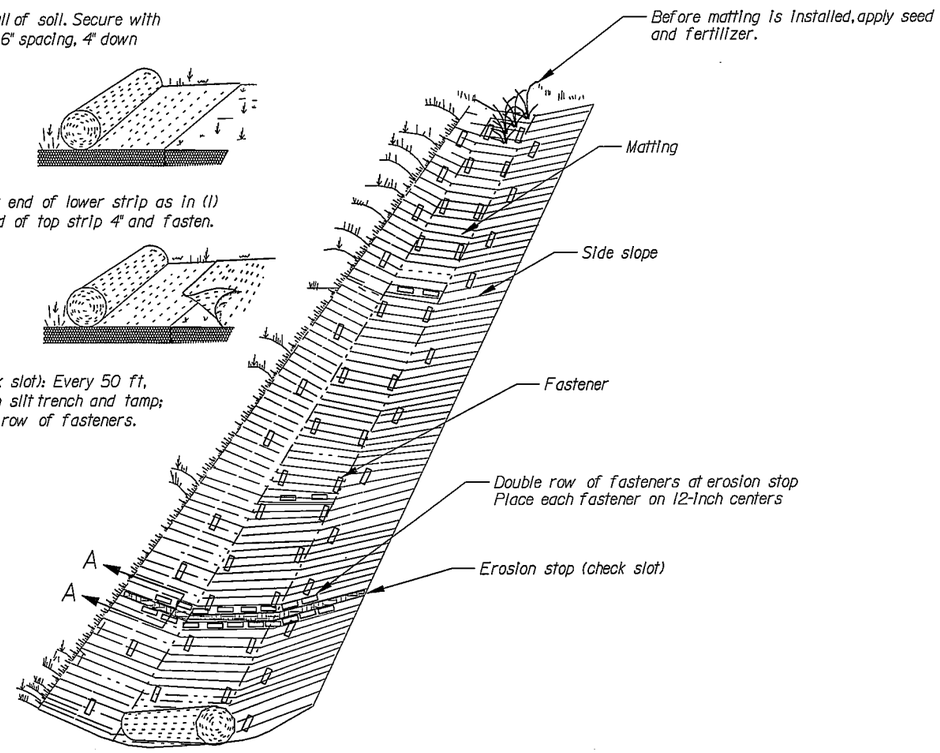

DETAIL FOR PERMANENTLY STABILIZING DITCHES WITH MATTING

NOTE:

1. Apply seed, fertilizer, and mulch, as directed in the plans and special contract requirements, before placing matting.

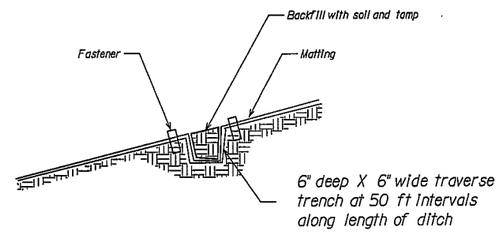

SECTION A-A
Erosion Stop (Check Slot) Detail

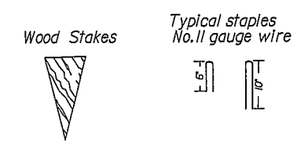

DETAIL A
Typical Ground Fasteners

NO SCALE

U.S. DEPARTMENT OF TRANSPORTATION
FEDERAL HIGHWAY ADMINISTRATION
EASTERN FEDERAL LANDS HIGHWAY DIVISION

DETAIL

DITCH STABILIZATION WITH MATTING

DETAIL APPROVED FOR USE --/----

REVISED: 06/00

DETAIL E629-2

7/10/2008 1:46:17 PM G:\Proj\CT052885\TRAN\FINAL_MOD_7\df629x02.dgn

NPS. NO.	REG	STATE	PROJECT	SHEET NO.	TOTAL SHEETS
601 / 43918	S.E.	NC	PRA-BLRI 2P14	158	166

ROADSIDE SIGN
RURAL DISTRICT
NO SHOULDER

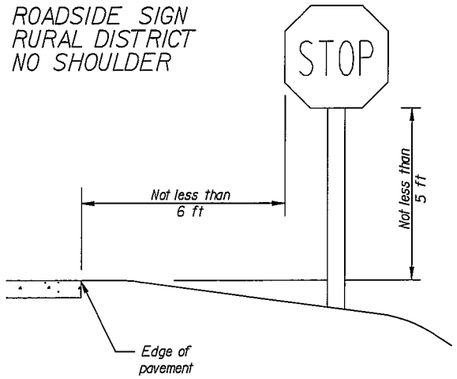

WARNING SIGN
WITH ADVISORY
SPEED PLAQUE
RURAL DISTRICT

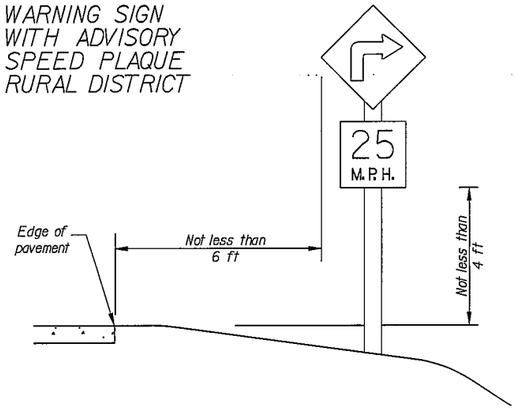

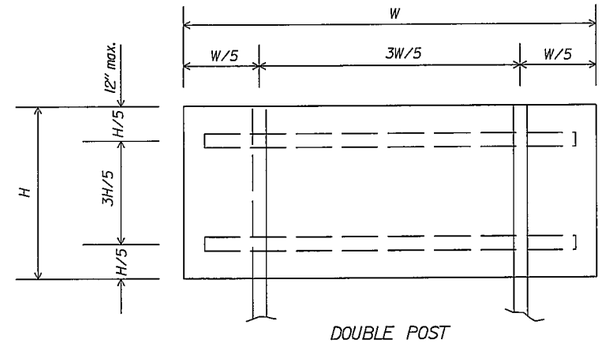

DOUBLE POST

Notes:

1. Locations and height to be in accordance with the 'Manual on Uniform Traffic Control Devices for Streets and Highways' (MUTCD), latest edition.
2. Use wood battens bolted to post at vertical spacings not to exceed 30-inches.
3. Use double posts if W is over 3 feet.
4. For sign punching details, see the blank standards in the "Standard Highway Signs" as specified in the MUTCD, latest edition.
5. For steel posts, provide a 1/4" x 6" soil plate. Use the same type of steel for the soil plate as for the post. Soil plate is not required for breakaway design.
6. For signs requiring posts sizes 6 x 6 and greater, signs are considered to be non-breakaway if multiple posts are required and posts cannot be spaced a minimum of 7 feet apart. Place non-breakaway signs outside the clearzone or shield with approved barrier. Do not place holes in posts of non-breakaway signs.
7. Depth, D, is to be in accordance with the 'Manual on Uniform Traffic Control Devices for Streets and Highways' (MUTCD), latest edition, Section 2A.21 and the AASHTO manual 'Specifications for Structural Supports for Highway Signs, Luminaires, and Traffic Signals', latest edition or as directed by the CO. D (min) is given in CHART A.

ROADSIDE SIGN
BUSINESS OR
RESIDENCE
DISTRICT

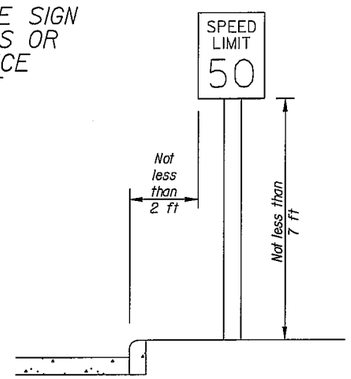

ROADSIDE SIGN
RURAL DISTRICT
WITH SHOULDER

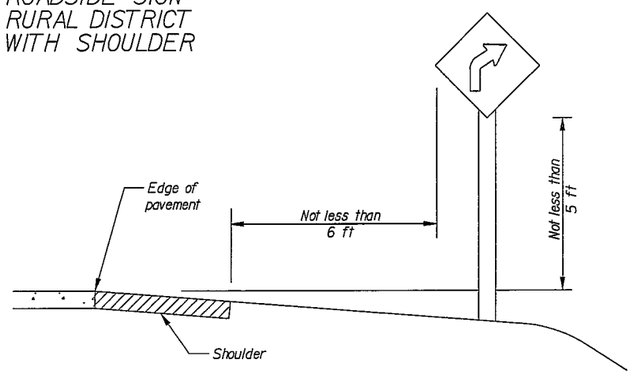

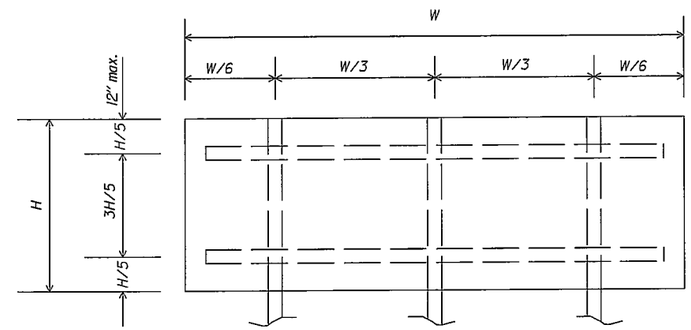

TRIPLE POST

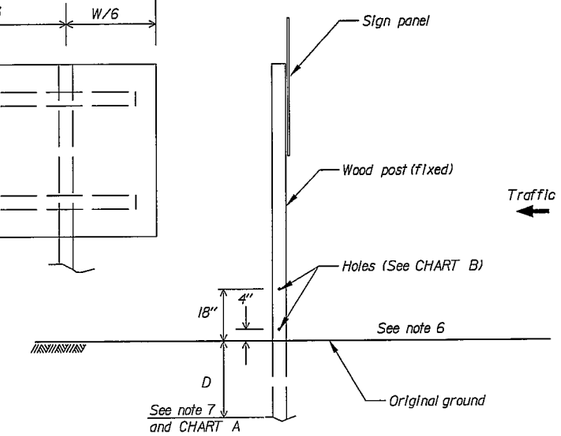

BREAKAWAY SUPPORT DETAIL

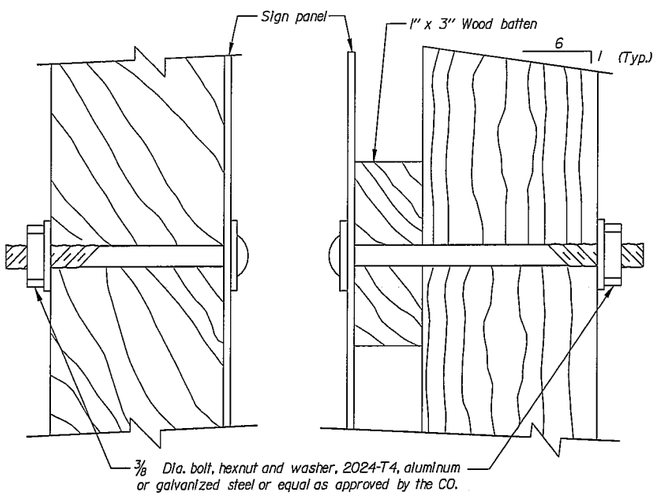

WITHOUT BATTEN

WITH BATTEN

FASTENER DETAIL

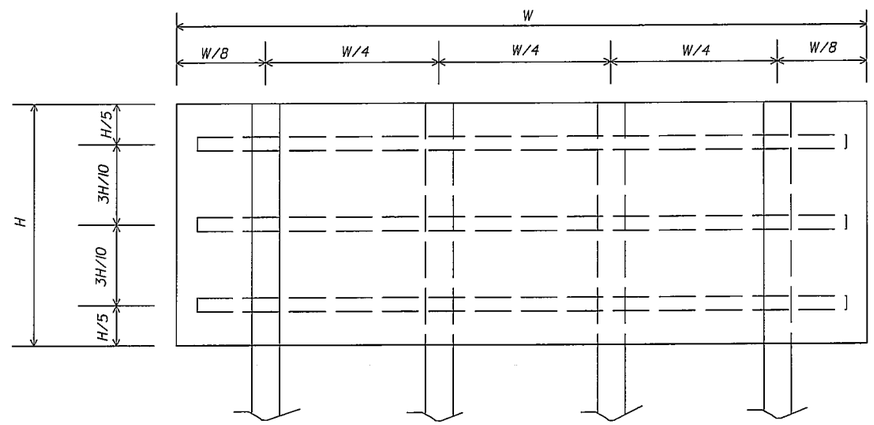

QUADRUPLE POST

CHART B	
Post Size	Hole Diameter
4" x 4"	None Required
4" x 6"	1.5"
6" x 6"	2"
6" x 8"	3"

CHART A					
Post Size (Inch)	D (min.) *	Maximum Sign Area (sq. ft.)			
		Single Post	Double Post	Triple Post	Quadruple Post
4 x 4 (Wood)	3'	10	20	X	X
4 x 6 (Wood)	4'	15	35	45	60
6 x 6 (Wood)	4'	20	50	75	100

*See note 7

No scale

U.S. DEPARTMENT OF TRANSPORTATION
FEDERAL HIGHWAY ADMINISTRATION
EASTERN FEDERAL LANDS HIGHWAY DIVISION

DETAIL

SIGN STRUCTURES

DETAIL APPROVED FOR USE --/----

REVISED: 3/2004 12/2004

DETAIL E633-1

7/10/2008 1:46:28 PM G:\Nra\CT052885\TRA\FINAL_MOD_7\df633x01.dgn

NPS NO.	REG	STATE	PROJECT	SHEET NO.	TOTAL SHEETS
601 / 43918	SE	NC	PRA-BLRI 2P14	159	166

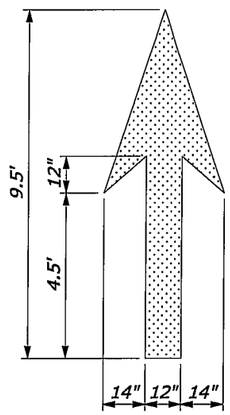

THROUGH LANE-USE ARROW

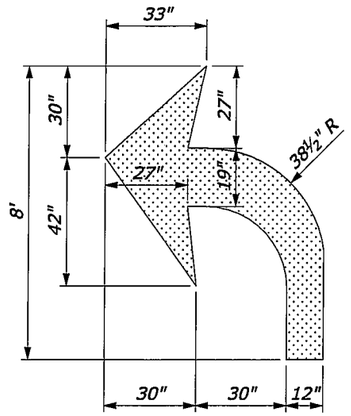

TURN LANE-USE ARROW

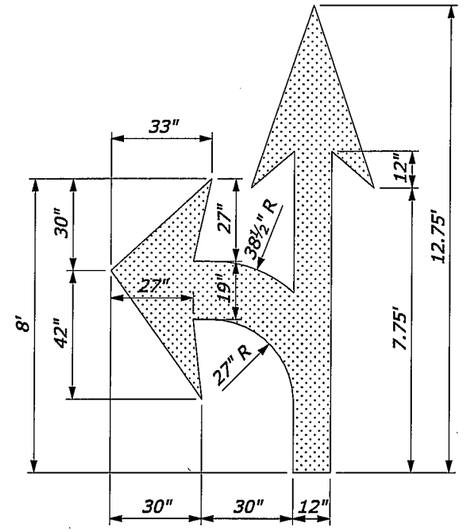

TURN AND THROUGH LANE-USE ARROW

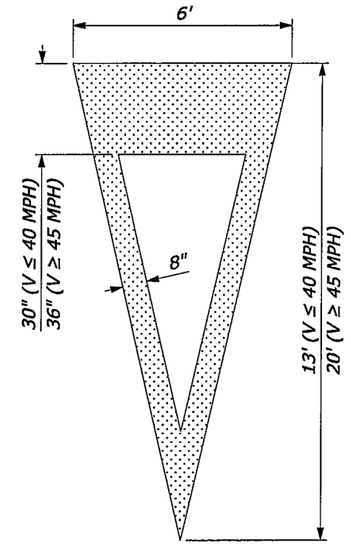

YIELD AHEAD TRIANGLE SYMBOL

NOTE:

1. *Place pavement word and symbol markings in accordance with the "Manual on Uniform Traffic Control Devices" (MUTCD), current edition.*
2. *All letters, numerals and symbols shall conform with the "Standard Highway Signs", current edition.*
3. *The Accessibility Parking Space marking only includes the accessibility symbol unless a border is indicated in the Striping Plans.*

PAVEMENT MARKING AREAS

TYPE	SQFT
Through Lane-Use Arrow	12
Turn Lane-Use Arrow	16
Turn and Through Lane-Use Arrow	26
Yield Ahead Arrow (V<70 km/h)	26
Yield Ahead Arrow (V≥70 km/h)	37
Accessibility Marking (symbol only)	2
Accessibility Marking w/ border (White)	5
Accessibility Marking w/ border (Blue)	9
AHEAD Word Marking	30
ONLY Word Marking	21
SCHOOL Word Marking	33
STOP Word Marking	22
YIELD Word Marking	24

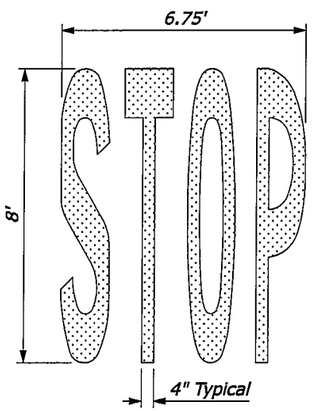

"STOP" WORD MARKING

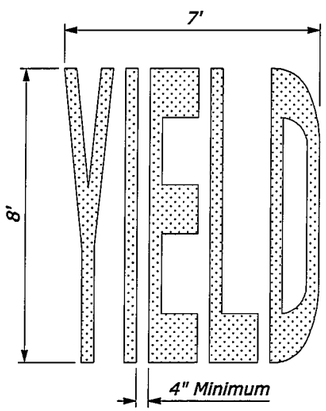

"YIELD" WORD MARKING

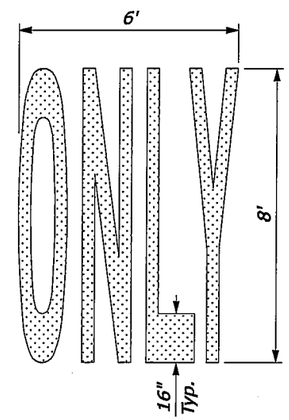

"ONLY" WORD MARKING

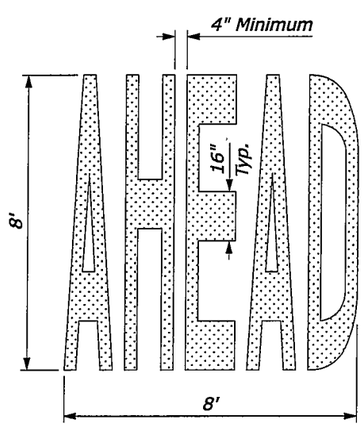

"AHEAD" WORD MARKING

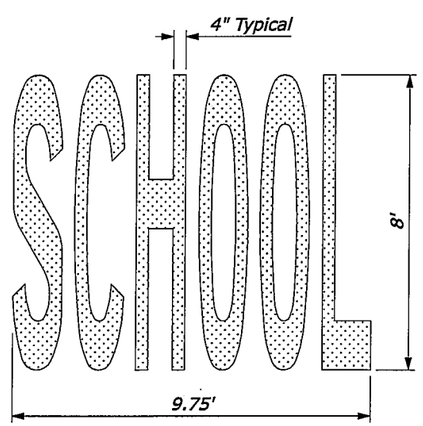

"SCHOOL" WORD MARKING

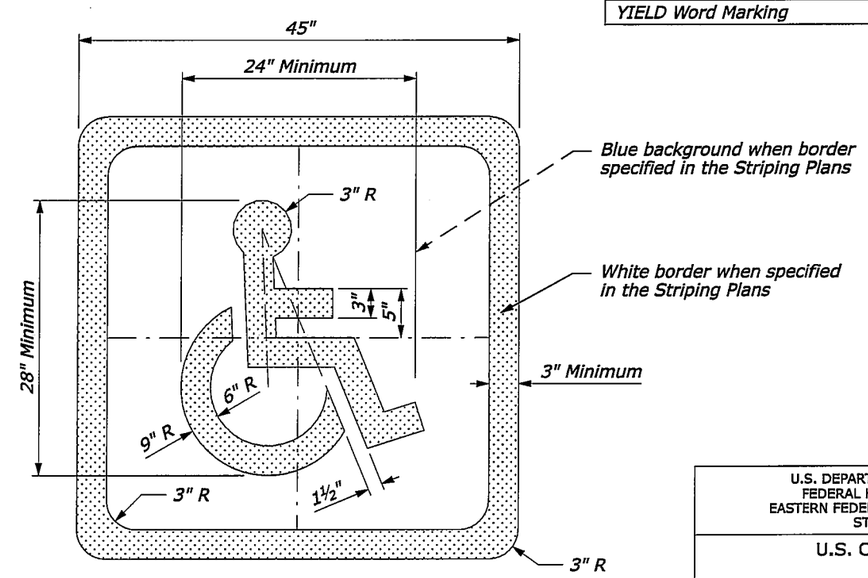

ACCESSIBILITY PARKING SPACE MARKING

NO SCALE

U.S. DEPARTMENT OF TRANSPORTATION
FEDERAL HIGHWAY ADMINISTRATION
EASTERN FEDERAL LANDS HIGHWAY DIVISION
STERLING, VIRGINIA

U.S. CUSTOMARY DETAIL

PAVEMENT MARKINGS SYMBOLS AND WORDS

DETAIL APPROVED FOR USE 3/2003
REVISED: 06/2007

DETAIL E634-01

7/16/2008 1:10:15 PM 1:10:15 PM G:\Pro\CT052885\TRA\FINAL_MOD_7\d1634x01V8.dgn

NPS NO.	REG	STATE	PROJECT	SHEET NO.	TOTAL SHEETS
601 / 43918	SE	NC	PRA-BLRI 2P14	160	166

NOTES:

1. Colors of the reflective markers to be either clear (white), yellow or red as specified.

2. The shell of the marker to be of one color or a combination of colors the same as the reflector.

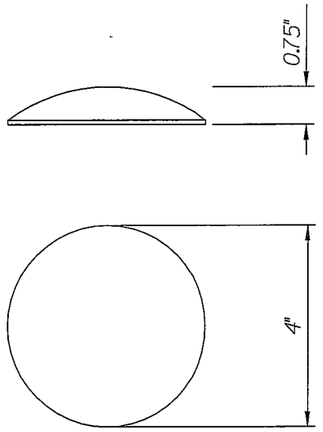

TYPE A

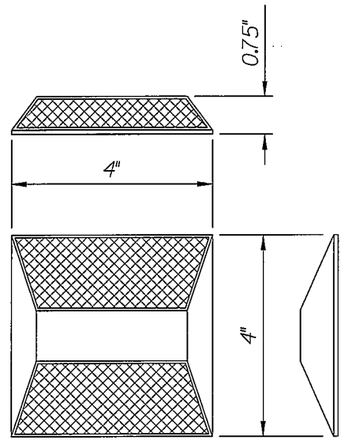

TYPE B

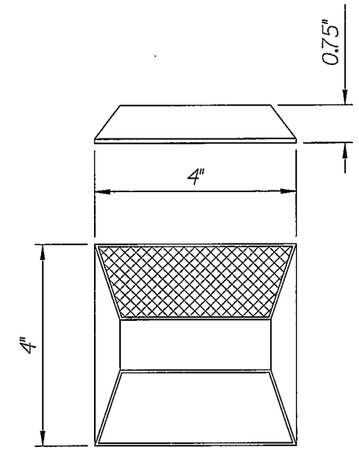

TYPE C

NON-SNOW PLOWABLE PAVEMENT MARKERS

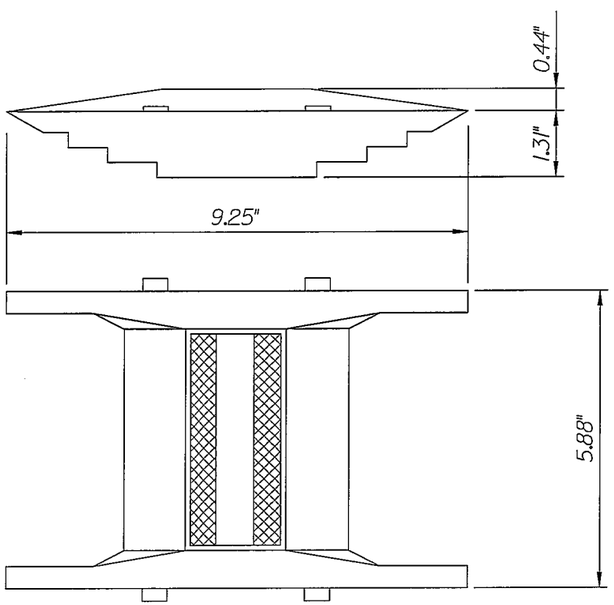

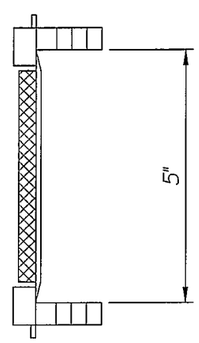

TYPE D

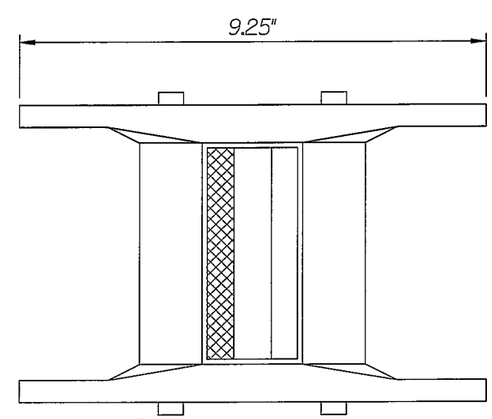

TYPE E

SNOW PLOWABLE PAVEMENT MARKERS

Reflective material

U.S. DEPARTMENT OF TRANSPORTATION
FEDERAL HIGHWAY ADMINISTRATION
EASTERN FEDERAL LANDS HIGHWAY DIVISION

DETAIL

RAISED PAVEMENT MARKERS

DETAIL APPROVED FOR USE 10/94

REVISED: 11/94

DETAIL E634-2

7/10/2008 1:46:48 PM G:\ra\CT052885\TRA\FINAL_MOD_7\d1634x02.dgn

NPS NO.	REG	STATE	PROJECT	SHEET NO.	TOTAL SHEETS
601 / 43918	S.E.	NC	PRA-BLRI-2P14	161	166

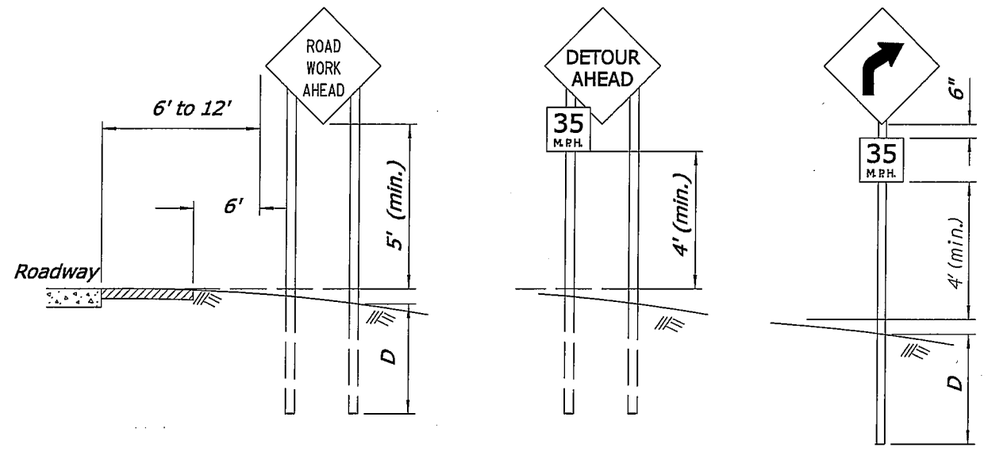

RURAL AREA

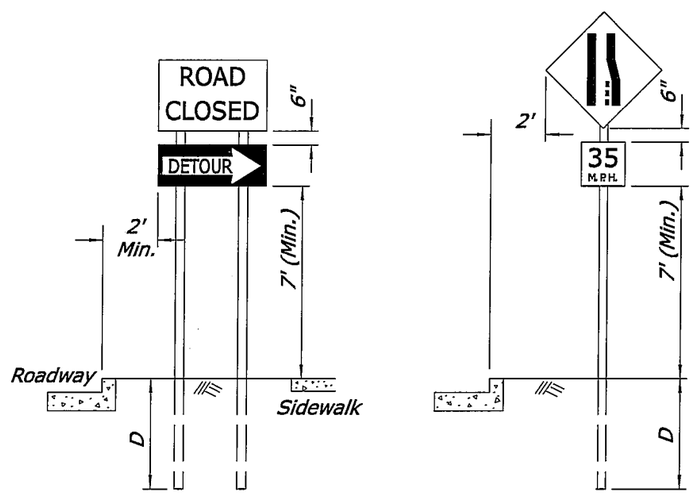

URBAN AREA

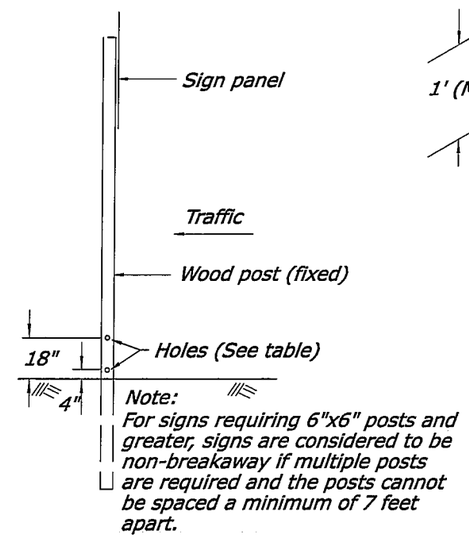

Note:
For signs requiring 6"x6" posts and greater, signs are considered to be non-breakaway if multiple posts are required and the posts cannot be spaced a minimum of 7 feet apart.

BREAKAWAY SUPPORT DETAIL
(FIXED SIGNS - 4" x 6" AND GREATER POSTS)

FIXED ROADWAY SIGNS

Post size	D	Hole Dia.	Maximum Sign Area - Sq. ft.			
			1 Post	2 Posts	3 Posts	4 Posts
4" x 4"	3'	None Req'd	10	20		
4" x 6"	4'	1.5"		35	50	70
6" x 6"	4'	2"		50	75	100
6" x 8"	5'	3"		85	125	165

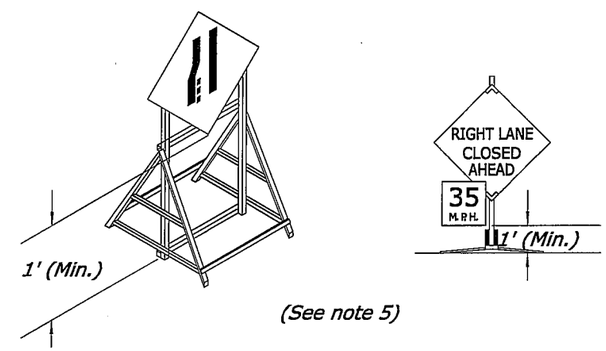

(See note 5)

PORTABLE SIGNS

(See note 4)

Notes:

1. Wood posts are 4"x 4" unless otherwise indicated.
2. Mount signs that are wider than 3-feet or larger than 10 square feet on double posts.
3. All lumber dimensions are nominal.
4. The Contractor may submit alternate details for portable signs, however, sign mounts hold the sign face in a vertical plane. Portable signs may be mounted lower than fixed signs when approved by the CO. Ensure all portable sign supports meet the requirements of NCHRP-350 for crashworthiness.
5. When parking is permitted within 200 feet of the sign, mount the sign a minimum of 7 feet above the pavement surface.
6. When approved by the CO and the Utility Company, utility poles may be used for sign mounting.
7. For posts greater than 4" x 4" see the Breakaway Support Detail. If breakaway design cannot be used, due to post spacing, the sign should be placed outside the clearzone or be shielded by barrier. Do not place holes in posts of non-breakaway signs

NO SCALE

U.S. DEPARTMENT OF TRANSPORTATION
FEDERAL HIGHWAY ADMINISTRATION
EASTERN FEDERAL LANDS HIGHWAY DIVISION
STERLING, VIRGINIA

U.S. CUSTOMARY DETAIL

CONSTRUCTION TRAFFIC CONTROL SIGN MOUNTING

DETAIL APPROVED FOR USE 02/2007

REVISED: 02/07 06/07 02/08

DETAIL E635-01

7/16/2008 1:49:51 PM 49:51 PM G:\Tra\CT052885\TRA\FINAL_MOD_7\d1635x01V8.dgn

NPS NO.	REG	STATE	PROJECT	SHEET NO.	TOTAL SHEETS
601 / 43918	S.E.	NC	PRA-BLRI-2P14	162	166

NOTES:

1. For periods as noted in Table A, pavement may be unmarked if appropriate vehicle positioning guides are provided.
2. Typical spacing between Vehicle Position Guides is 40 ft as shown. In areas of severe curvature the spacing is 20 ft. Areas of severe curvature are shown in the plans or provided in the Vehicle Positioning Guide Schedule.
3. See Section 718.21(b) requirements for vehicle positioning guides.
4. When ADT > 1000 and special hazards are present, supplement the R4-1 sign at the beginning of each no passing zone with a W14-3 sign mounted on the left of the roadside.
5. Repeat R4-1 at 3,000 ft intervals minimum.

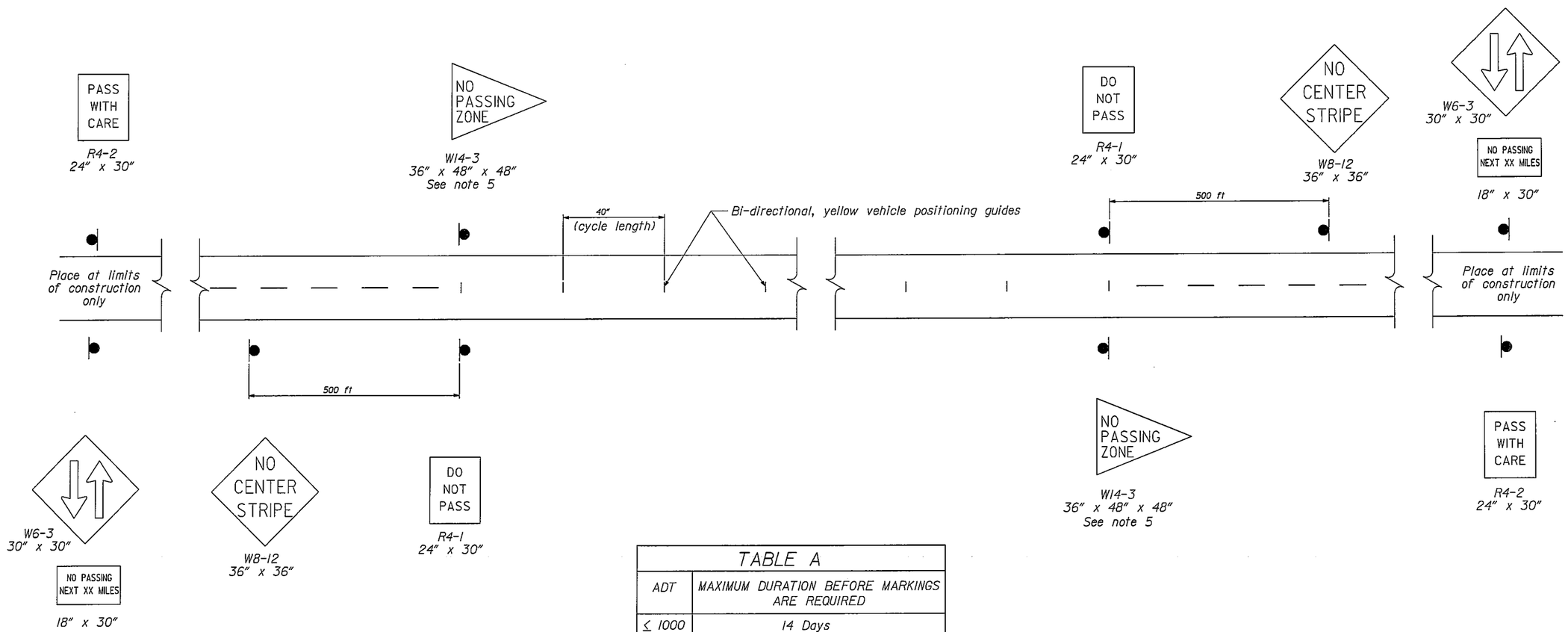

TABLE A	
ADT	MAXIMUM DURATION BEFORE MARKINGS ARE REQUIRED
≤ 1000	14 Days
> 1000	3 Days

NO SCALE

U.S. DEPARTMENT OF TRANSPORTATION
FEDERAL HIGHWAY ADMINISTRATION
FEDERAL LANDS HIGHWAY

DETAIL

VEHICLE POSITIONING GUIDES FOR TEMPORARY USE WITH UNMARKED PAVEMENTS

STANDARD APPROVED FOR USE --/----

REVISED: 5/02

DETAIL 635-14

/10/2008 tra\CI4058885\MTRA\FINAL_MOD_7\dt635x14.dgn

NPS NO.	REG	STATE	PROJECT	SHEET NO.	TOTAL SHEETS
601 / 43918	S.E.	NC	PRA-BLRI-2P14	163	166

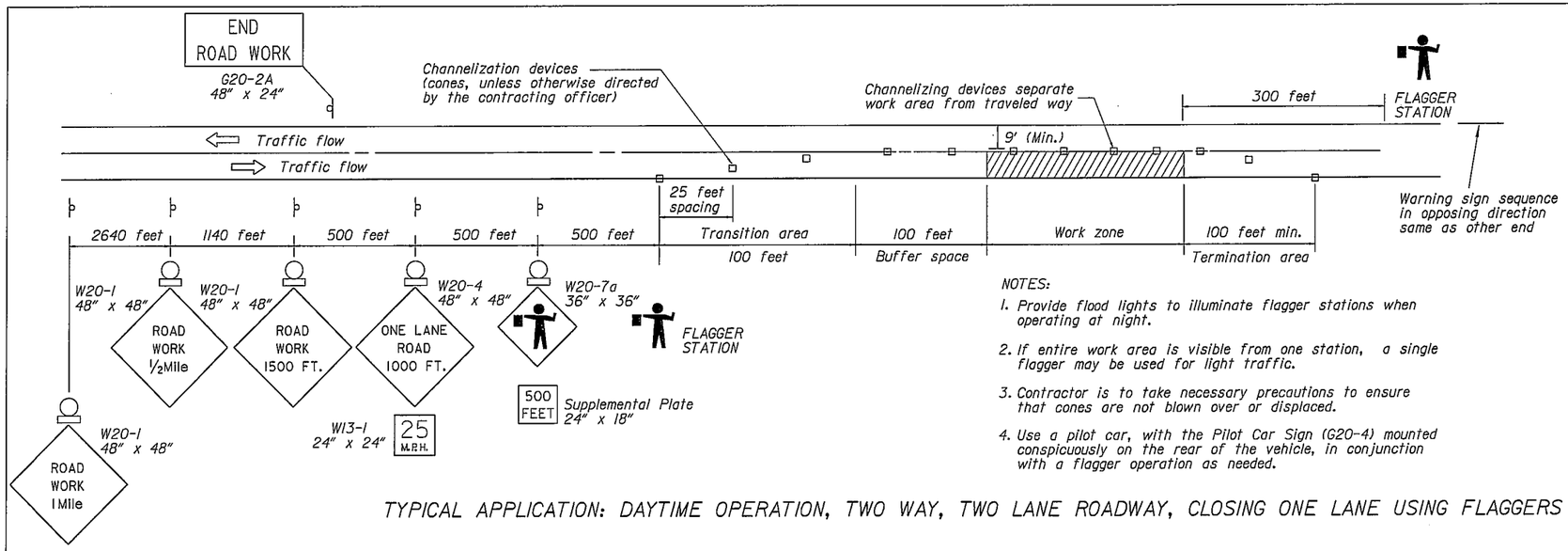

NOTES:

1. Provide flood lights to illuminate flagger stations when operating at night.
2. If entire work area is visible from one station, a single flagger may be used for light traffic.
3. Contractor is to take necessary precautions to ensure that cones are not blown over or displaced.
4. Use a pilot car, with the Pilot Car Sign (G20-4) mounted conspicuously on the rear of the vehicle, in conjunction with a flagger operation as needed.

TYPICAL APPLICATION: DAYTIME OPERATION, TWO WAY, TWO LANE ROADWAY, CLOSING ONE LANE USING FLAGGERS

GENERAL NOTES

1. Final location and spacing of signs and devices may be changed to fit field conditions as approved by the CO.
2. Use drums, instead of cones, to delineate work zone during night time non-construction periods.
3. Temporary traffic signals may be used in lieu of flaggers at lane closures during day time non-construction periods. Temporary traffic signals shall be used at all night time lane closures.
4. The buffer space should be extended so that the two-way traffic taper is placed before a horizontal (or crest vertical) curve to provide adequate sight distance for the flagger and a queue of stopped vehicles.

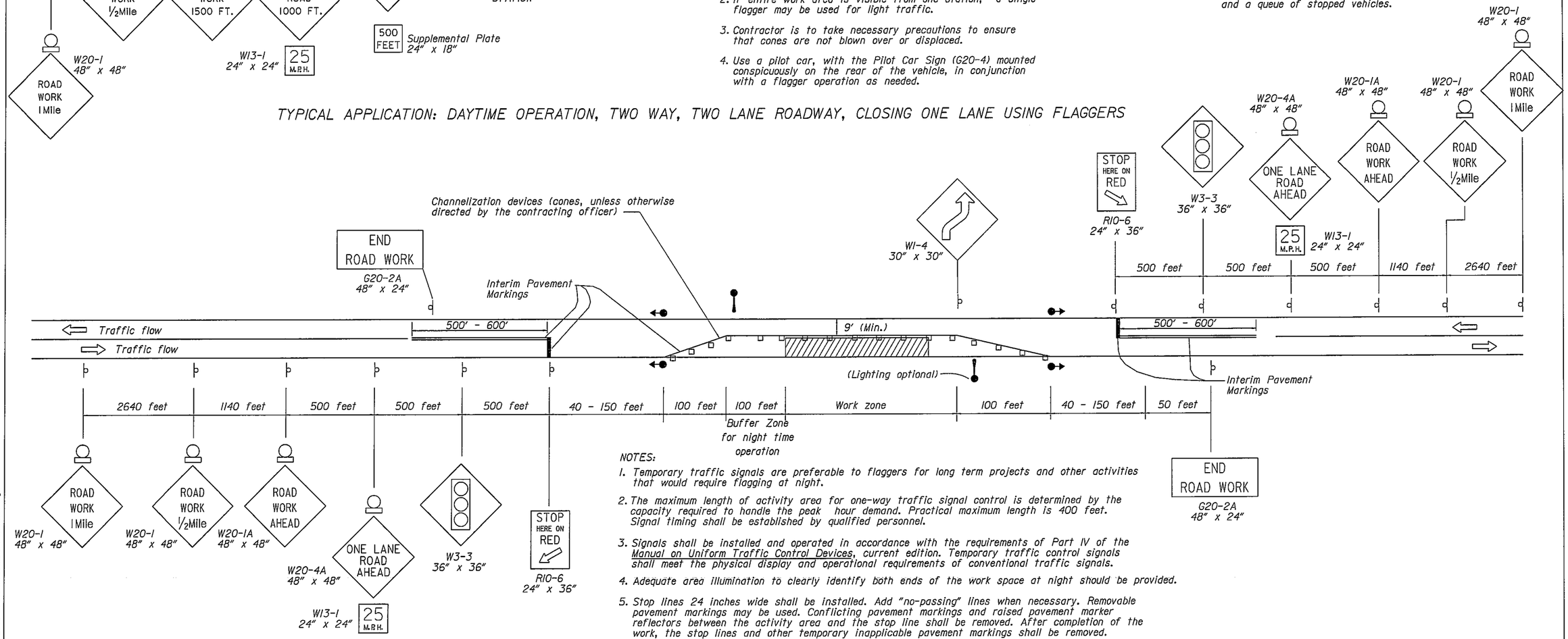

NOTES:

1. Temporary traffic signals are preferable to flaggers for long term projects and other activities that would require flagging at night.
2. The maximum length of activity area for one-way traffic signal control is determined by the capacity required to handle the peak hour demand. Practical maximum length is 400 feet. Signal timing shall be established by qualified personnel.
3. Signals shall be installed and operated in accordance with the requirements of Part IV of the Manual on Uniform Traffic Control Devices, current edition. Temporary traffic control signals shall meet the physical display and operational requirements of conventional traffic signals.
4. Adequate area illumination to clearly identify both ends of the work space at night should be provided.
5. Stop lines 24 inches wide shall be installed. Add "no-passing" lines when necessary. Removable pavement markings may be used. Conflicting pavement markings and raised pavement marker reflectors between the activity area and the stop line shall be removed. After completion of the work, the stop lines and other temporary inapplicable pavement markings shall be removed.
6. The Type B flashing warning lights shown on the ROAD WORK AHEAD and the ONE LANE ROAD AHEAD signs may be used whenever night lane closure is necessary. Type B lights may also be used to increase the daytime target value of the signs.
7. The horizontal or vertical alignment of the roadway may require adjustments in the location of the advance warning signs (the distances shown for advance warning sign spacings are minimum). The vertical alignment of the roadway may require adjustments in the heights of the signal heads.
8. When the signal is changed to a flash condition either manually or automatically, red shall be flashed to both approaches. ± ± ±
9. For the work at MP 361/40+00 , MP 362/41+00 , and MP 363/21+50 ,supplement the shoulder w/aggregate base to provide a minimum 12' wide travel lane as approved by the CO.

TYPICAL APPLICATION: NIGHT TIME OPERATION, TWO WAY, TWO LANE ROADWAY, CLOSING ONE LANE USING TEMPORARY TRAFFIC SIGNAL

U.S. DEPARTMENT OF TRANSPORTATION
FEDERAL HIGHWAY ADMINISTRATION
EASTERN FEDERAL LANDS HIGHWAY DIVISION

DETAIL

CONSTRUCTION TRAFFIC CONTROL SINGLE LANE CLOSURE LAYOUT

DETAIL APPROVED FOR USE --/----

REVISED:

DETAIL E635-A

7/10/2008 1:48:12 PM G:\Tra\CT05288\SV\TRAFFIWAL_MOD_7v\E635xAdgn

NPS NO.	REG	STATE	PROJECT	SHEET NO.	TOTAL SHEETS
601 / 43918	S.E.	NC	PRA-BLRI-2P14	164	166

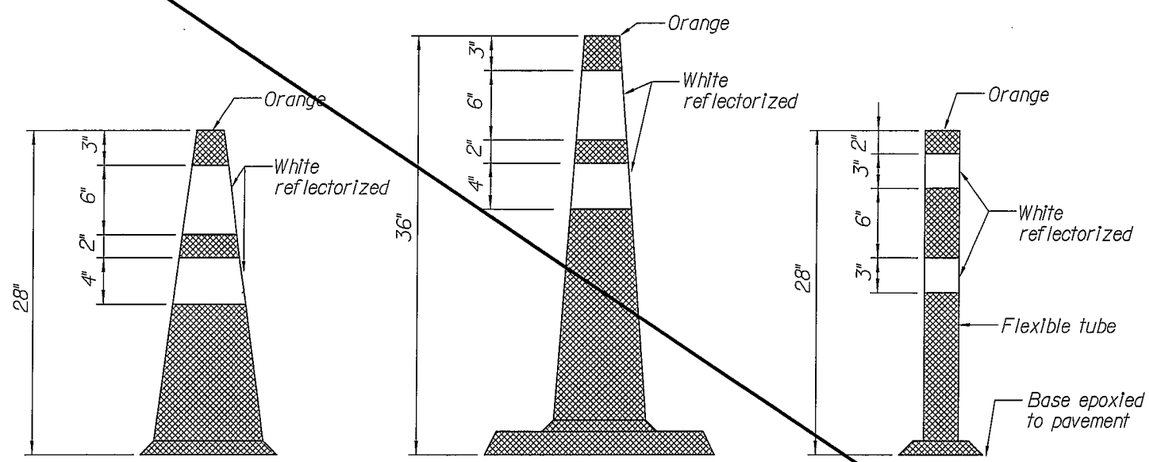

(Standard Cone)
TYPE A

(High Ballasted Cone)
TYPE B

(Flexible Cone)
TYPE C

CONES

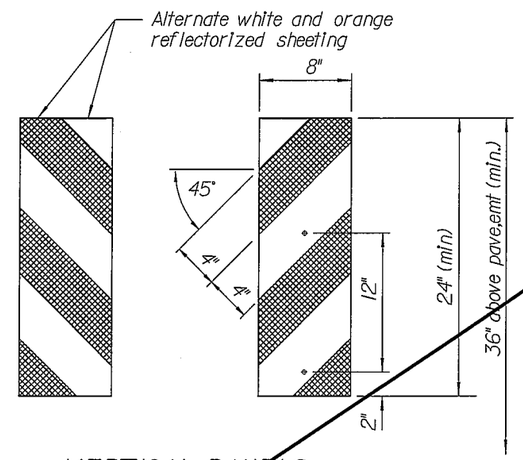

VERTICAL PANELS
(ORANGE AND WHITE)

Notes:

1. Reflectorize vertical panels with alternate orange and white stripes as shown.
2. Mount delineators 4 feet above the pavement surface.
3. Drums may be weighted with 20 pounds (maximum of sand, and contain no moisture.
4. Temporary raised pavement marker's color to match corresponding pavement striping, clear for white and amber for yellow.
5. Cones, type A may be ballasted with weighted rings.

DO NOT USE

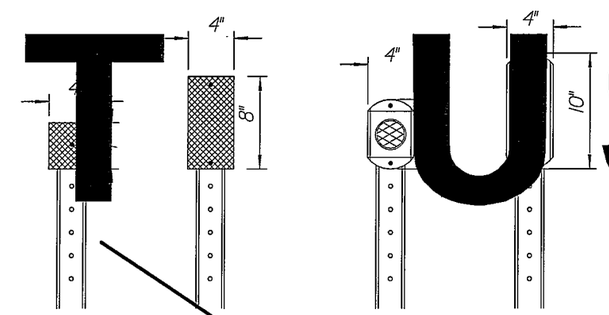

Type III
Reflective Sheeting

3" Diameter
Reflector

DELINEATORS

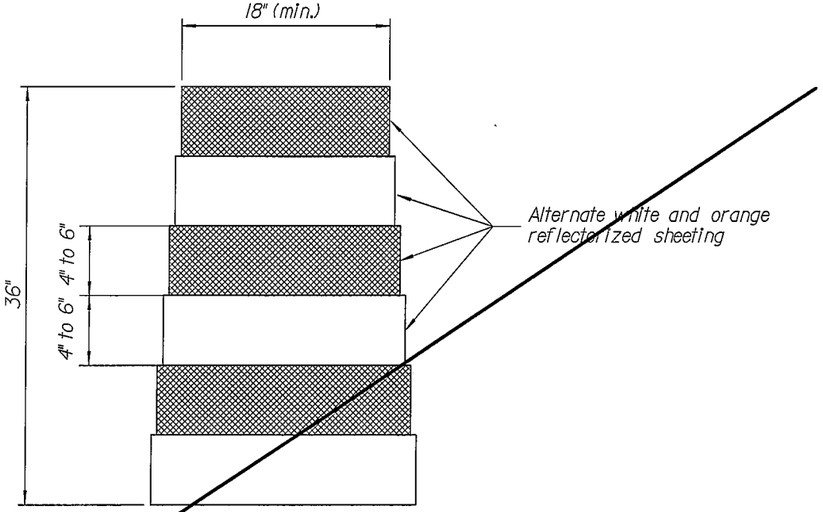

(Non-metal Drum)
TYPE B

DRUM

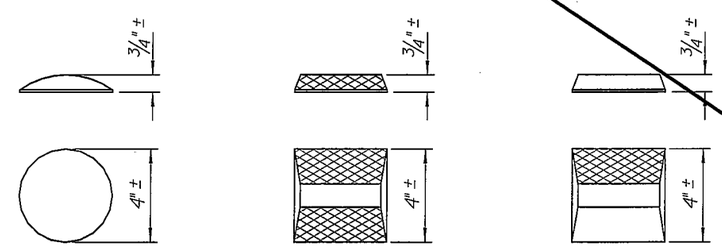

TYPE A

TYPE B

TYPE C

TEMPORARY RAISED PAVEMENT MARKERS

U.S. DEPARTMENT OF TRANSPORTATION
FEDERAL HIGHWAY ADMINISTRATION
EASTERN FEDERAL LANDS HIGHWAY DIVISION

DETAIL

CONSTRUCTION TRAFFIC CONTROL
CHANNELIZING DEVICES

DETAIL APPROVED FOR USE --/----

REVISED:

DETAIL
E635-B

7/16/2008 2:23:29 PM G:\tra\CT052885\TRAFFWAL_MOD_7\df635x03.dgn

NPS NO.	REG	STATE	PROJECT	SHEET NO.	TOTAL SHEETS
601 / 43918	S.E.	NC	PRA-BLRI-2P14	165	166

TYPICAL APPLICATION: ONE WAY OR TWO WAY, TWO LANE ROADWAY, CLOSING SHOULDER

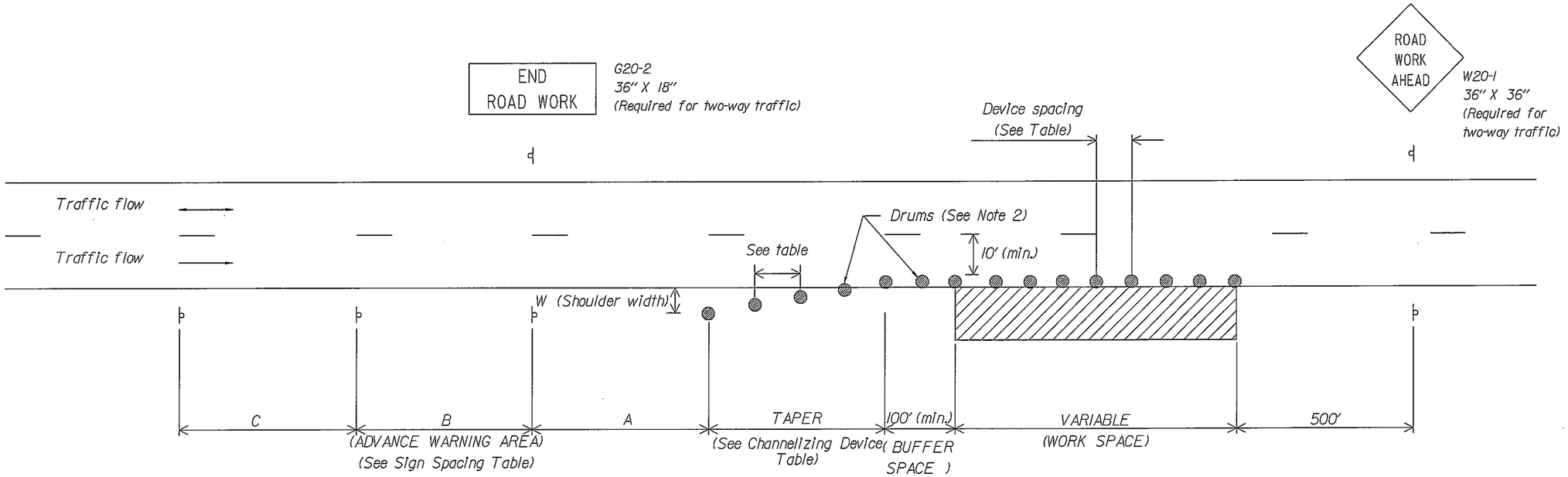

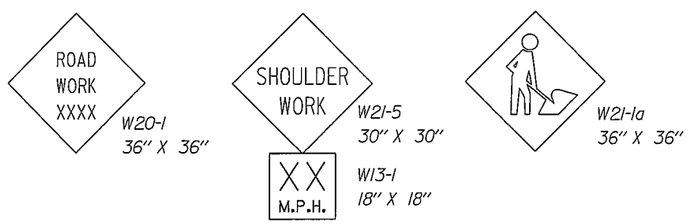

CHANNELIZING DEVICE TABLE			
APPROACH SPEED (MPH)	MINIMUM TAPER LENGTH (FT)	CHANNELIZING DEVICE SPACING (FT)	
		TAPER AREA	WORK AREA
25	Taper formula:	25	50
30	$L = \frac{WxS}{3}$ for speeds of 45 or greater	30	60
35	$L = \frac{WS^2}{160}$ for speeds of 40 or less	35	70
40	Where:	40	80
45	L= Minimum length of taper	45	90
50	S= Numerical value of posted speed limit prior to work area or 85 percentile speed	50	100
55	W= Width of offset	55	100

ADVANCE WARNING SIGN SPACING CHART			
POSTED SPEED LIMIT (MPH)	Recommended Distance Between Signs (feet)		
	A	B	C
≤ 35	200	200	200
40-50	350	350	350
55	500	500	500
Expressway/Urban Parkway	1000	1600	2600

NOTES:

1. Final location and spacing of signs and devices may be changed to fit field conditions as approved by the CO.
2. For operations that require a shoulder closure for a day or less, drums may be substituted with cones, type A in the Work Area.

U.S. DEPARTMENT OF TRANSPORTATION
FEDERAL HIGHWAY ADMINISTRATION
EASTERN FEDERAL LANDS HIGHWAY DIVISION

DETAIL

CONSTRUCTION TRAFFIC CONTROL
SHOULDER CLOSURE LAYOUT

DETAIL APPROVED FOR USE --/----
REVISED: 4/15/2002

DETAIL
E635-7

7/10/2008 1:47:46 PM G:\ro\CT052885\TRAFFINAL_MOD_7\d1635x07.dgn

NPS NO.	REG	STATE	PROJECT	SHEET NO.	TOTAL SHEETS
601 / 43918	S.E.	NC	PRA-BLRI-2P14	166	166

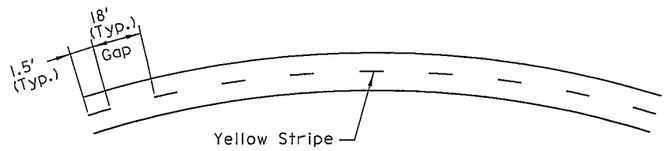

TWO-LANE, TWO-WAY ROAD
PASSING ALLOWED
(CURVE < 500' RADIUS)

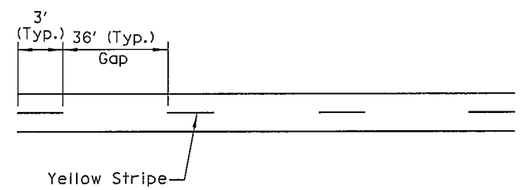

TWO-LANE, TWO-WAY ROAD
PASSING ALLOWED
(TANGENTS AND CURVES WITH
RADIUS > 500')

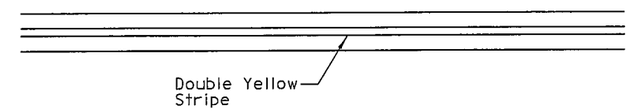

TWO-LANE, TWO-WAY ROAD
NO PASSING ALLOWED

TEMPORARY STRIPING DETAIL

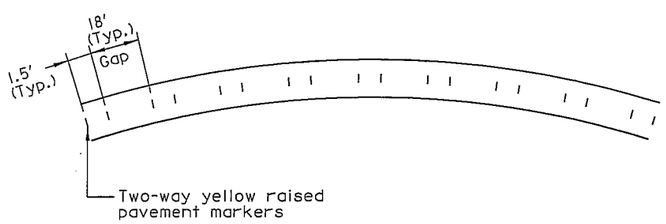

TWO-LANE, TWO-WAY ROAD
PASSING ALLOWED
(CURVE < 500' RADIUS)

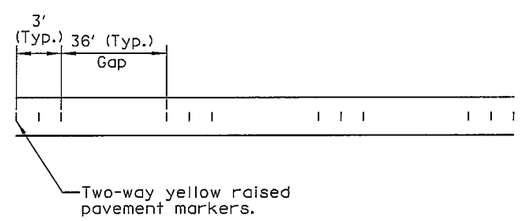

TWO-LANE, TWO-WAY ROAD
PASSING ALLOWED
(TANGENTS AND CURVES WITH
RADIUS > 500')

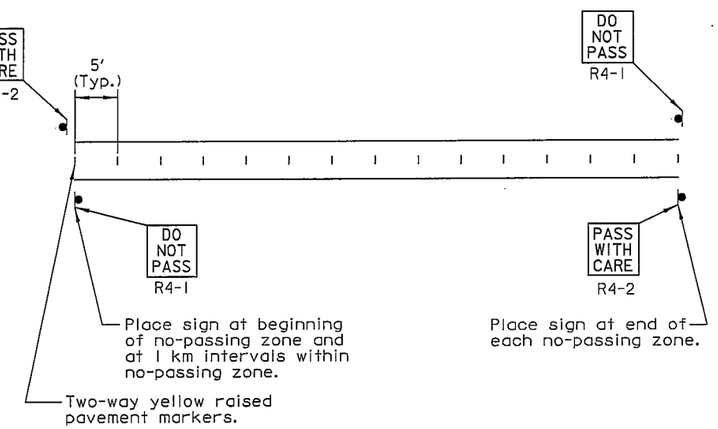

TWO-LANE, TWO-WAY ROAD
NO PASSING ALLOWED

TEMPORARY RAISED PAVEMENT MARKING DETAIL

U.S. DEPARTMENT OF TRANSPORTATION
FEDERAL HIGHWAY ADMINISTRATION
EASTERN FEDERAL LANDS HIGHWAY DIVISION

DETAIL
TEMPORARY PAVEMENT MARKING FOR PROJECTS WITH ADT > 1000

DETAIL APPROVED FOR USE --/----
REVISED:

DETAIL
E635-D

7/10/2008 1:48:24 PM G:\tra\CT052885\TRA\FINAL_MOD_7\dt635xA.dgn