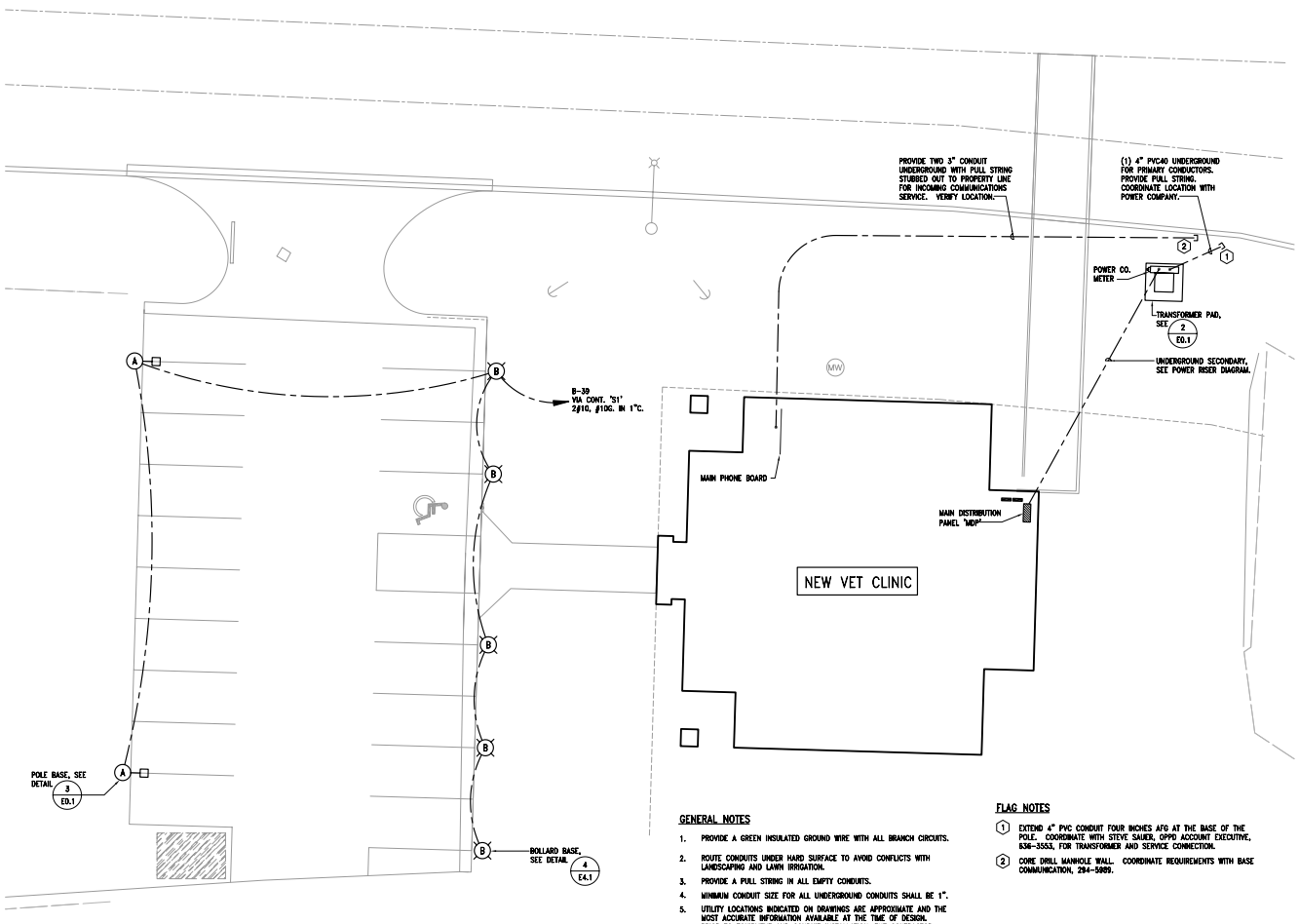

1 SITE PLAN - ELECTRICAL

E0.1 SCALE: 1" = 10'-0"

GENERAL NOTES

1. PROVIDE A GREEN INSULATED GROUND WIRE WITH ALL BRANCH CIRCUITS.
2. ROUTE CONDUITS UNDER HARD SURFACE TO AVOID CONFLICTS WITH LANDSCAPING AND LAWN IRRIGATION.
3. PROVIDE A PULL STRING IN ALL EMPTY CONDUITS.
4. MINIMUM CONDUIT SIZE FOR ALL UNDERGROUND CONDUITS SHALL BE 1".
5. UTILITY LOCATIONS INDICATED ON DRAWINGS ARE APPROXIMATE AND THE MOST ACCURATE INFORMATION AVAILABLE AT THE TIME OF DESIGN. PRIOR TO EQUIPMENT AND CONDUIT INSTALLATION, THE CONTRACTOR SHALL COORDINATE EXACT INSTALLATION DETAILS AND MODIFY WORK PLAN ACCORDINGLY TO MEET UTILITY REQUIREMENTS. CORRESPOND WITH UTILITY COMPANY PRIOR TO ANY SITE DEVELOPMENT THAT MAY IMPACT THE INSTALLATION SUCH AS IRRIGATION IN-STALLATION, CONCRETE OR ASPHALT INSTALLATION, LANDSCAPING, ETC.

FLAG NOTES

1. EXTEND 4" PVC CONDUIT FOUR INCHES AFG AT THE BASE OF THE POLE. COORDINATE WITH STEVE SAUER, OPPD ACCOUNT EXECUTIVE, 636-3553, FOR TRANSFORMER AND SERVICE CONNECTION.
2. CORE DRILL MANHOLE WALL. COORDINATE REQUIREMENTS WITH BASE COMMUNICATION, 294-5989.

SITE LIGHTING SCHEDULE

FIXT #	MANUFACTURER	CATALOG NO. - NOTE 1	BEAM DIST.	LAMP DATA SIZE	LAMP DATA TYPE	VOLTAGE	QTY. PER POLE	POLE DESCRIPTION TYPE NOTE 2	FINISH	HT. (FT.)	DESCRIPTION	REMARKS
A	LITHONIA	KSF1 250M R3 208 SPO6 DBL	III	250W	MH	208	1	SSS	DBL	20'-0"	SINGLE HEAD	
B	ARCHITECTURAL LANDSCAPE LIGHTING	LL-31 42CFT 208 30" BK EMG		42W TRI	CF	208	1				BOLLARD	W/ EMERG. BATTERY

NOTES:

1. CONTRACTOR SHALL VERIFY LIGHT FIXTURE CATALOG NUMBER & INSTALLATION REQUIREMENTS PRIOR TO ORDERING.
2. POLE TYPE DESCRIPTION: SSS = SQUARE STRAIGHT STEEL, STS = SQUARE TAPERED STEEL, RSS = ROUND STRAIGHT STEEL, RTS = ROUND TAPERED STEEL
SSA = SQUARE STRAIGHT ALUMINUM, STS = SQUARE TAPERED STEEL, RSA = ROUND STRAIGHT ALUMINUM, RTA = ROUND TAPERED ALUMINUM

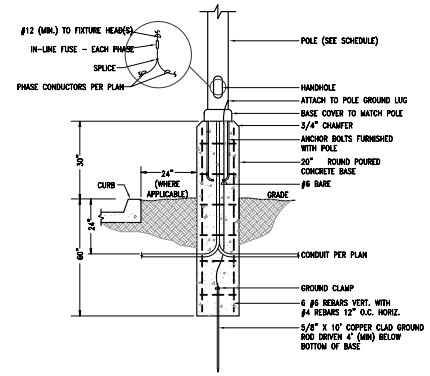

3 POLE BASE DETAIL

SCALE: NO SCALE

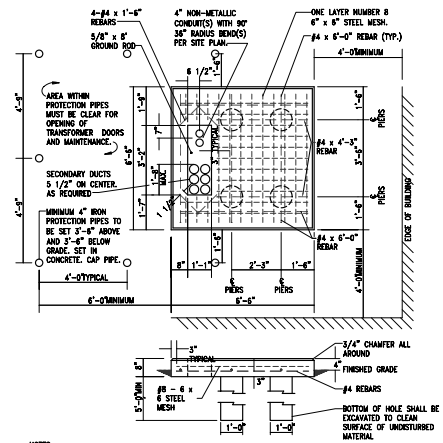

NOTES:

1. THE TOP ONE (1) FOOT OF SUBGRADE BENEATH THE SLAB SHALL BE "THOROUGHLY" COMPACTED TO 90% OF MAXIMUM DENSITY PER ASTM D698.
2. IF THE TOP THREE (3) FEET OF SUBGRADE BENEATH THE SLAB IS SUSCEPTIBLE TO A HIGH WATER TABLE OR PERIODIC SATURATION, THE EXISTING SOIL SHALL BE EXCAVATED AND BACKFILLED WITH A CLEAN SAND OR GRAVEL AND THOROUGHLY COMPACTED TO 90% OF MAXIMUM DENSITY PER ASTM D2049 AND D1556.
3. SLAB TO BE MADE OF SG-6 CONCRETE WITH A MINIMUM 28 DAY STRENGTH OF 3,000 PSI.
4. DUCTS ARE NOT BE BE INSTALLED IN CONCRETE WITHIN SLOT.
5. TOP OF SLAB MUST BE SMOOTH, FLAT AND LEVEL.
6. NO WALLS TO BE BUILT AROUND OR CANOPIES ABOVE TRANSFORMER.
7. ALL CONDUITS ENTERING SLAB TO BE VERTICAL AND AT 90° ANGLE WITH TOP OF SLAB.
8. COORDINATE WITH SERVING UTILITY COMPANY TO ALLOW ANY REQUIRED INSPECTIONS BEFORE, DURING, AND AFTER CONSTRUCTION OF PAD.
9. LOCATION AND DIMENSIONS OF SLOT AND CONDUITS MUST BE MAINTAINED IN RELATION TO OVERALL SLAB DIMENSIONS.

2 TRANSFORMER PAD DETAIL

SCALE: NO SCALE

Offutt Air Force Base

APPROVED

SIGNATURE	OFFICE

COORDINATION

"SIGNING OF THE COVER SHEET CONSTITUTES COORDINATION OF ALL DRAWINGS IN THIS PROJECT; SUBSEQUENT SHEETS NEED NOT BE SIGNED."

DESIGN FIRM

ARCHITECT
ALLEY POYNER MACCHIETTO ARCHITECTURE, P.C.

MECHANICAL / ELECTRICAL
MORRESSEY ENGINEERING

STRUCTURAL
PERFORMANCE ENGINEERING

CIVIL ENGINEERING
KIRKHAM MICHAEL

PROFESSIONAL ELECTRICAL ENGINEER STEPHEN M. FARRINGTON E-11987 STATE OF NEBRASKA

Designer	Project Manager
SMF	ATM
Drafter	Date
SMF	30-MAY-2008

REVISION	BY/DATE

SHEET TITLE
E0.1
SITE PLAN - ELECTRICAL

SHEET 27 OF 32

PROJECT TITLE
CONSTRUCT VETERINARY CLINIC, B595

Project Number: SGBP-07-0019
Drawing Number: OFF-B-6052
Facility Number: 595