| STATE | PROJECT | SHEET NUMBER |
|---|---|---|
| WA | PRA-MORA 10(11) | A.1 |

# U. S. DEPARTMENT OF THE INTERIOR
# NATIONAL PARK SERVICE
# MOUNT RAINIER NATIONAL PARK

PLANS FOR PROPOSED PROJECT

## WA PRA-MORA 10(11)
## NPS PKG. NO. 007334

# SR 123-2 and SR 410-1c

PMIS 7334 PMIS 51091

PIERCE COUNTY
WASHINGTON

SR 123-2 LENGTH 5.814 MILES
SR 410-1c LENGTH 1.818 MILES

PRELIMINARY

Project Location

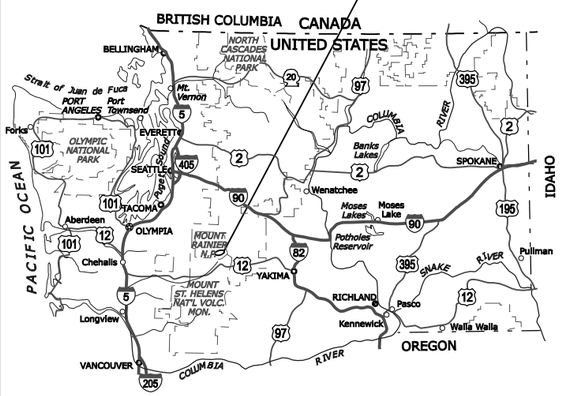


WASHINGTON KEY MAP

NATIONAL PARK SERVICE
Department of the Interior

**TYPE OF CONSTRUCTION:**

*Mill and Overlay, Grading, Base, Paving, Guardrail, Stone Masonry, and Drainage.*

**DESIGN DESIGNATION:**

| | SR 410 | SR 123 |
|---|---|---|
| ADT 2004 | 930 | 820 |
| ADT 2024 | 1700 | 1030 |
| V | 35 MPH | 35 MPH |
| e (max) | 0.080 | 0.080 |

**SPECIFICATION:**

*Standard Specifications for Construction of Roads and Bridges on Federal Highway Projects, FP-03 US Customary Units*

FEDERAL LANDS HIGHWAY
COMMITMENT TO EXCELLENCE

PLANS PREPARED BY
**U.S. DEPARTMENT OF TRANSPORTATION**
**FEDERAL HIGHWAY ADMINISTRATION**
WESTERN FEDERAL LANDS HIGHWAY DIVISION
VANCOUVER, WASHINGTON

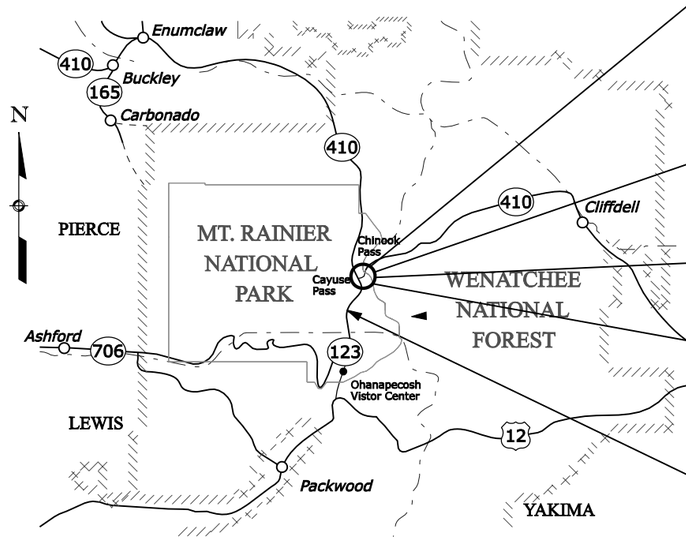


**END PROJECT**
*PRA-MORA 10(11)*
*SR 410-1c*
*RESUME 193+80 END 210+00*

**SUSPEND SR 410-1c**
*98+00*

**BEGIN SR 410-1c**
*18+00*

**END SR 123-2**
*488+84*

**BEGIN PROJECT**
*PRA-MORA 10(11)*
*BEGIN SR 123-2*
*180+00*

SCALE IN MILES
5 0 5 10 15 20 25

**RECOMMENDED:**

_____ DATE _____
Division Engineer,
Western Federal Lands Highway Division

_____ DATE _____
Project Manager,
Denver Service Center

_____ DATE _____
Superintendent,
Mount Rainer National Park

*APPROVED:*

_____ DATE _____
Regional Director, Pacific West Region,
National Park Service

NPS Pkg. No. 007334 NPS Drwg. No. 105/41956

Designed by: Checked by: _DATE_ " + " _FILE_ F:\Washton\MORA\MORA1011\Design\mora123410aa.dgn

| STATE | PROJECT | SHEET NUMBER |
|---|---|---|
| WA | PRA-MORA 10(11) | A.4 |

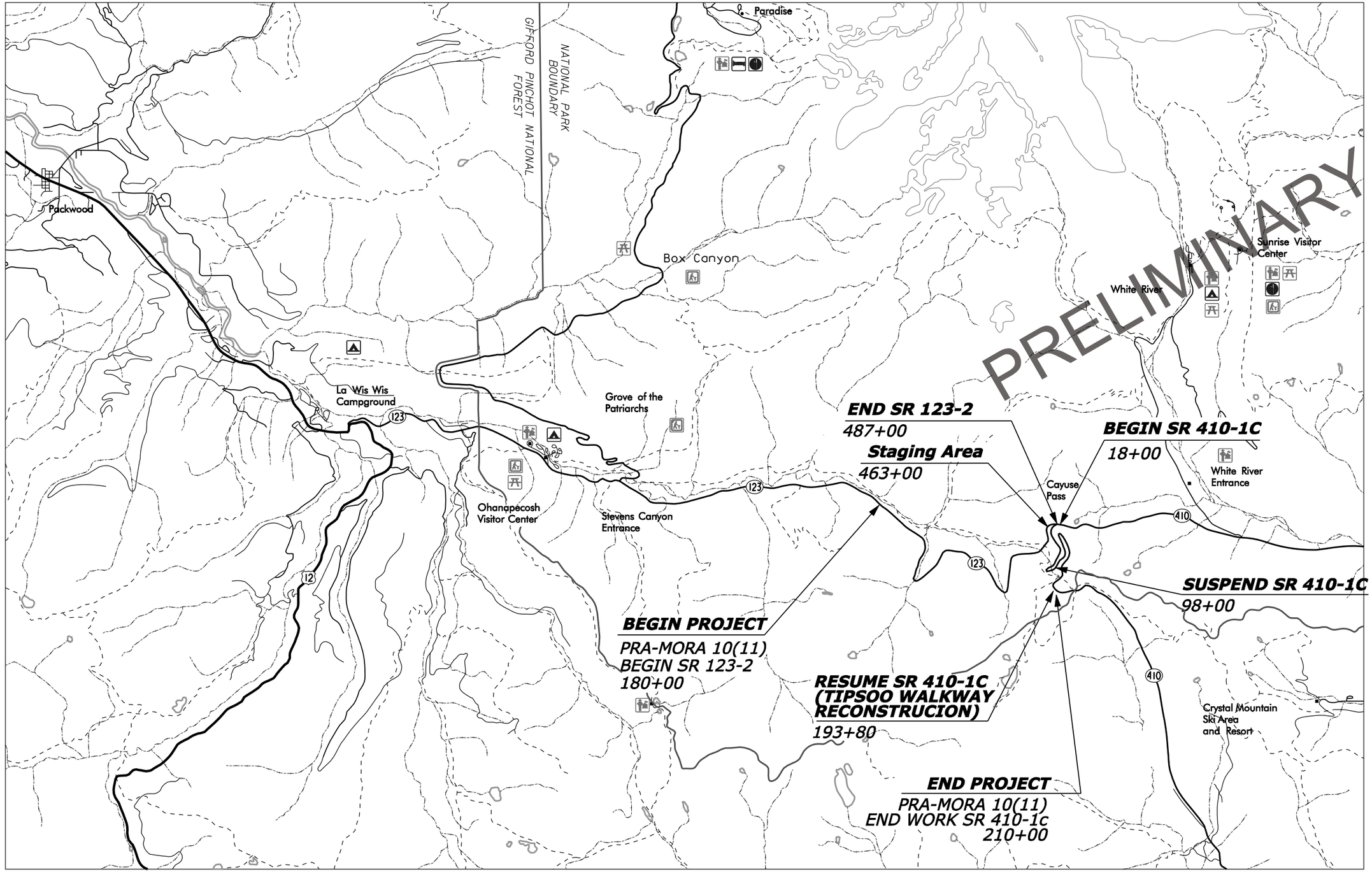


SCALE IN MILES

1 .5 0 1 2 3

N

NPS Pkg. No. 007334 NPS Drwg. No. 105/41956

# VICINITY MAP

F:\Washton\MORA\MORA1011\Design\mora12341bac.dgn _DATE_ " + " _FILE_ Designed by: Checked by: --/---- --/----

| STATE | PROJECT | SHEET NUMBER |
|---|---|---|
| WA | PRA-MORA 10(11) | C.2 |

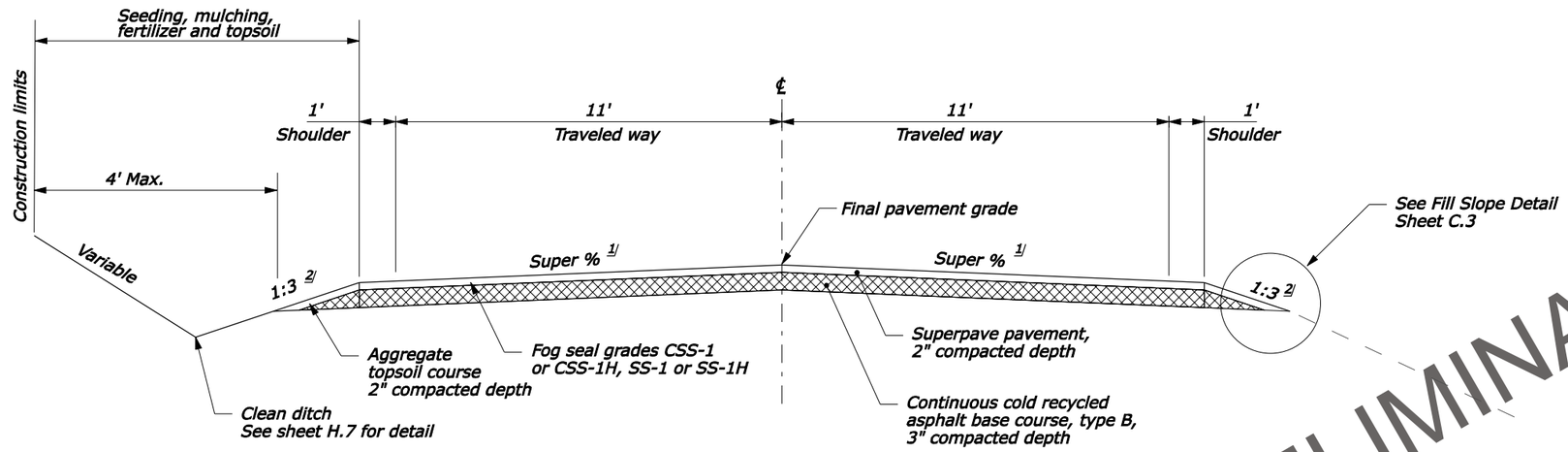


PRELIMINARY

## MAINLINE TYPICAL SECTION No. 1
## SR 123 & SR 410

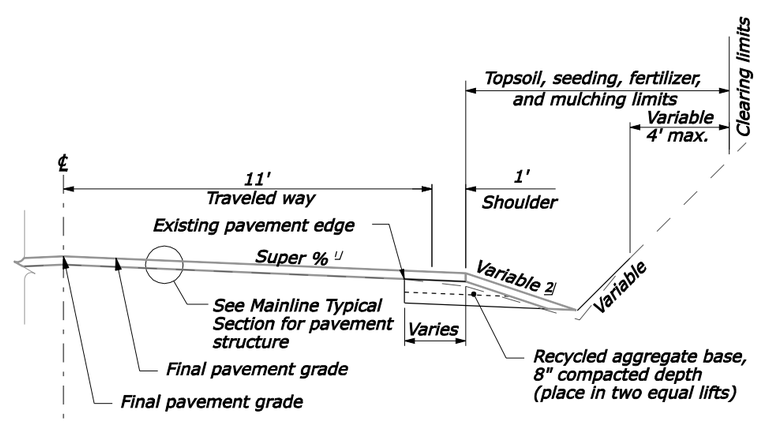


## SHOULDER WIDENING DETAIL

### SHOULDER WIDENING LOCATIONS

| LOCATION | SIDE | LENGTH (feet) |
|---|---|---|
| 237+30 TO 238+62 | RT | 132 |
| 241+56 TO 244+85 | RT/LT | 329 |

### NOTE:

1. Place minor hot asphalt as required to level irregular areas or depressions in the existing surface.
2. See Sheet C.7 for connection detail.

### FOOTNOTE:

1/ Match existing superelevation or crown at 2%.

2/ Adjust slope to fit existing topography (no steeper than 1:3).

NPS Pkg. No. 007334 NPS Drwg. No. 105/41956

NO SCALE

# TYPICAL SECTIONS

$PATH$ | $DATE$ | Designed by: | Checked by: | --/--- | --/---

| STATE | PROJECT | SHEET NUMBER |
|---|---|---|
| WA | PRA-MORA 10(11) | C.3 |

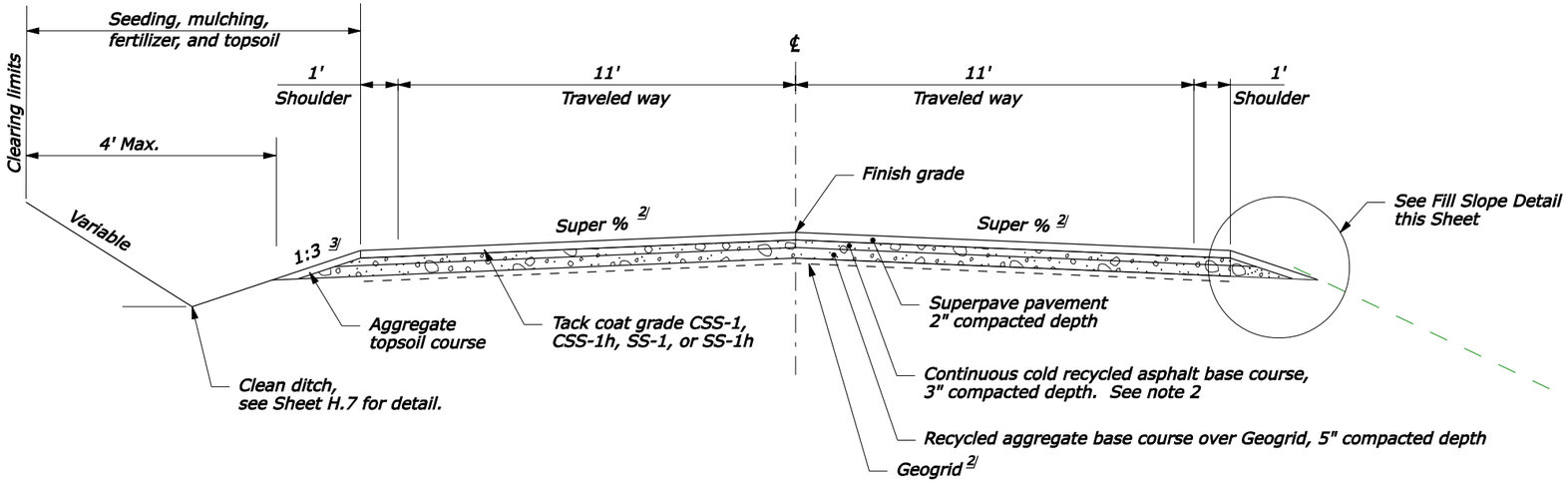


## MAINLINE TYPICAL SECTION No. 2 SUBGRADE REINFORCEMENT

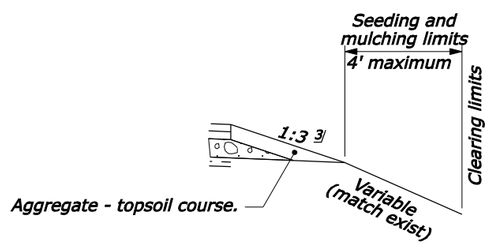


## FILL SLOPE DETAIL

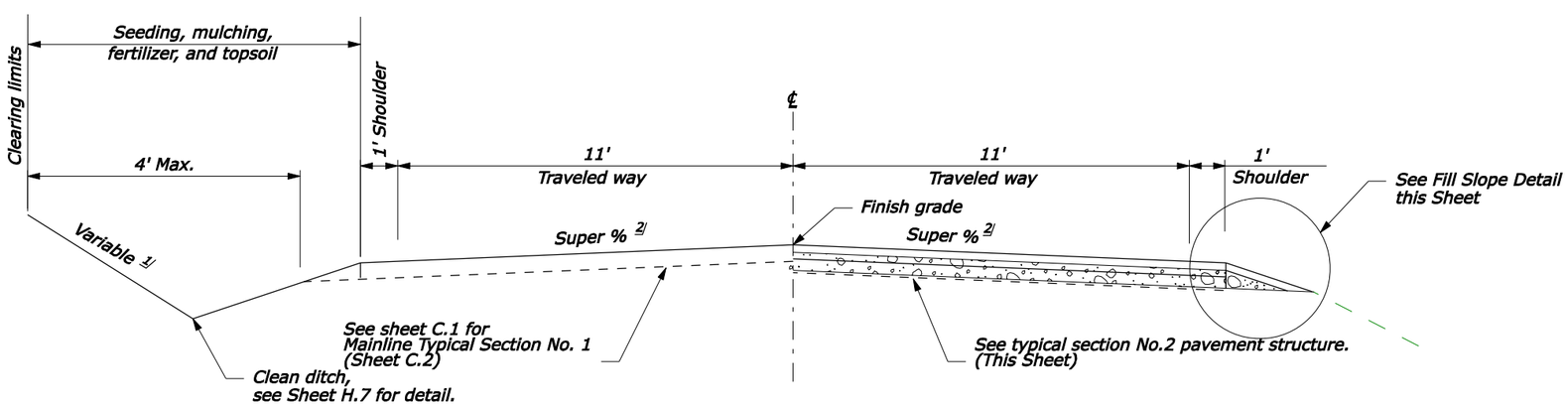


## ONE LANE SUBGRADE REINFORCEMENT DETAIL

NO SCALE

## SUBGRADE REINFORCEMENT AREAS

| LOCATION | SIDE LT/RT | LENGTH (feet) |
|---|---|---|
| 185+30 192+19 | LT/RT | 689 |
| 193+34 196+13 | LT/RT | 279 |
| 210+07 214+67 | LT/RT | 459 |
| 216+96 224+02 | LT/RT | 705 |
| 228+12 229+43 | LT/RT | 131 |
| 296+03 297+67 | LT/RT | 164 |
| 299+97 306+53 | LT/RT | 656 |
| 308+50 309+48 | LT/RT | 98 |
| 313+09 314+40 | LT/RT | 131 |
| 318+34 322+77 | LT/RT | 443 |
| 329+17 331+79 | LT/RT | 262 |
| 334+42 338+02 | LT/RT | 361 |
| 352+46 354+43 | LT/RT | 197 |
| 360+01 362+30 | LT/RT | 231 |
| 368+21 375+75 | LT/RT | 755 |
| 380+68 382+32 | LT/RT | 164 |
| 382+97 384+61 | LT/RT | 164 |
| 396+10 398+56 | LT/RT | 246 |
| 398+72 401+18 | LT/RT | 246 |
| 401+51 403+64 | LT/RT | 213 |
| 405+94 411+78 | LT/RT | 584 |
| 428+25 430+54 | LT/RT | 230 |
| 431+86 432+51 | LT/RT | 66 |
| 437+43 438+42 | LT/RT | 98 |
| 467+29 467+62 | LT/RT | 33 |
| 471+23 472+54 | LT/RT | 131 |
| 473+03 473+85 | LT/RT | 82 |

PRELIMINARY

### NOTE:

1. Conserve topsoil and vegetation from the existing roadway shoulders and ditch line in reconstruction areas. Place conserved topsoil adjacent to shoulders after final paving. Place aggregate topsoil under conserved topsoil as necessary to construct a smooth slope between finished grade and existing ground.

2. Mill and remove existing pavement structure to 8" depth. Install Geogrid material, Place recycled aggregate base (8" compacted depth) over Geogrid to elevation matching existing grade. Perform continuous cold recycle to top 3" of compacted recycled aggregate base.

### FOOTNOTE:

1/ Place geogrid according to Section 207.

2/ Match existing superelevation or crown at 2%.

3/ Adjust slope to fit existing topography (no steeper than 1:3).

NPS Pkg. No. 007334 NPS Drwg. No. 105/41956

# TYPICAL SECTIONS SUBGRADE REINFORCEMENT

$PATH$ $DATE$ Designed by: Checked by: --/---

| STATE | PROJECT | SHEET NUMBER |
|---|---|---|
| WA | PRA-MORA 10(11) | C.4 |

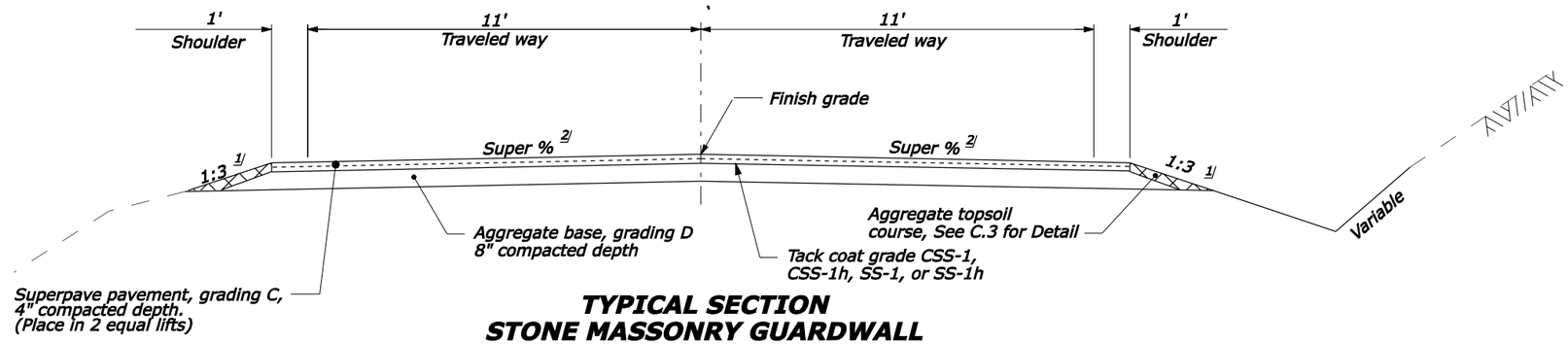


**TYPICAL SECTION**
**STONE MASONRY GUARDWALL**
232+38 to 232+94
235+20 to 235+66
410+76 to 411+21
426+30 to 426+75

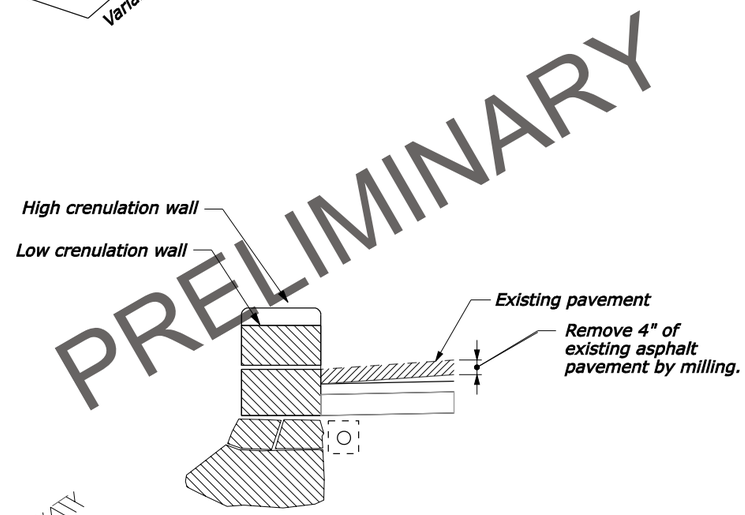


PRELIMINARY

**MASONRY GUARDWALL**
**GUTTERLINE DETAIL**

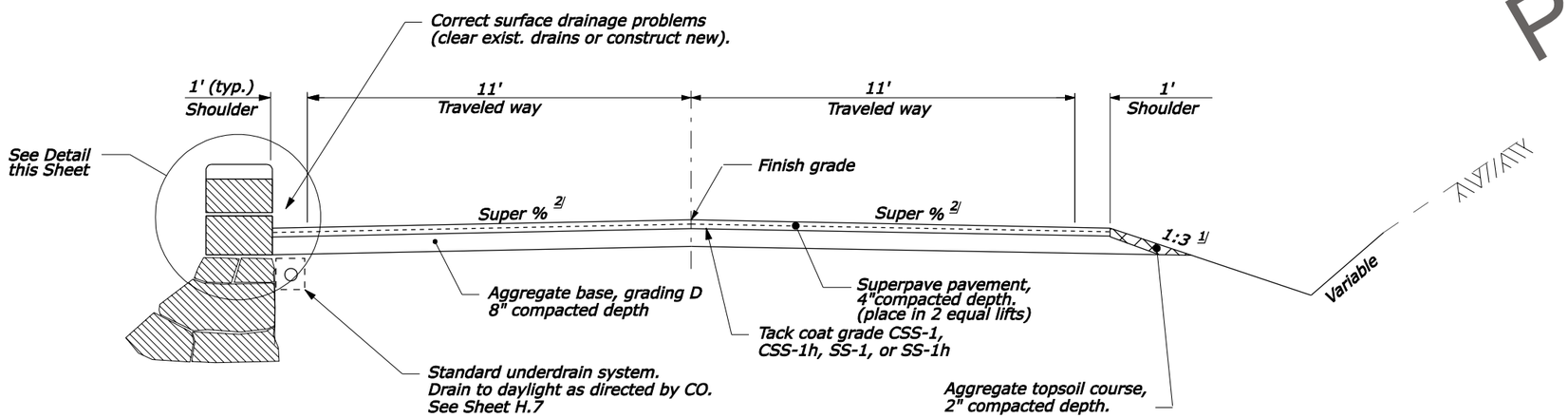


**TYPICAL SECTION**
**STONE MASONRY GUARDWALL**
232+94 to 235+20
411+21 to 426+30

NOTE:

1. Conserve the milled material for use as recycled aggregate base.
2. See Sheet C.7 for connection details.

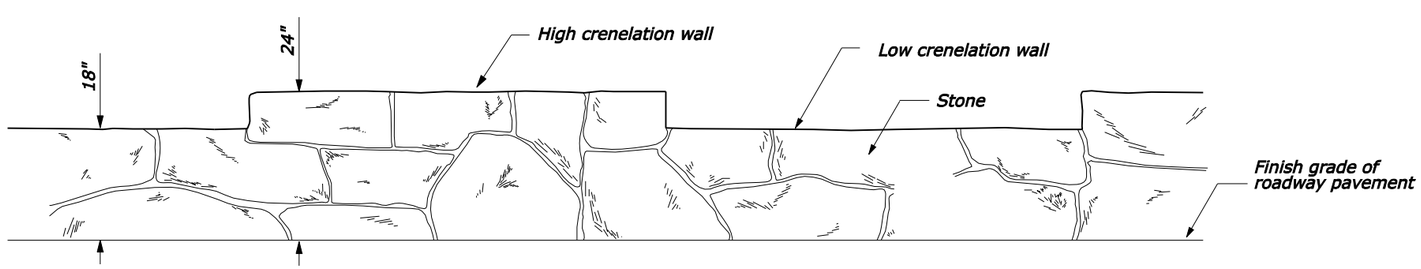


**EXISTING STONE MASONRY GUARDWALL PROFILE (Information only)**

NO SCALE

FOOTNOTE:

1/ Adjust slope to fit existing topography (no steeper than 1:3)

2/ Match existing superelevation or crown.

NPS Pkg. No. 007334 NPS Drwg. No. 105/41956

# MASONRY GUARDWALL AREAS

$PATH$ | $DATE$ | Designed by: | Checked by: | --/---

| STATE | PROJECT | SHEET NUMBER |
|---|---|---|
| WA | PRA-MORA 10(11) | C.5 |

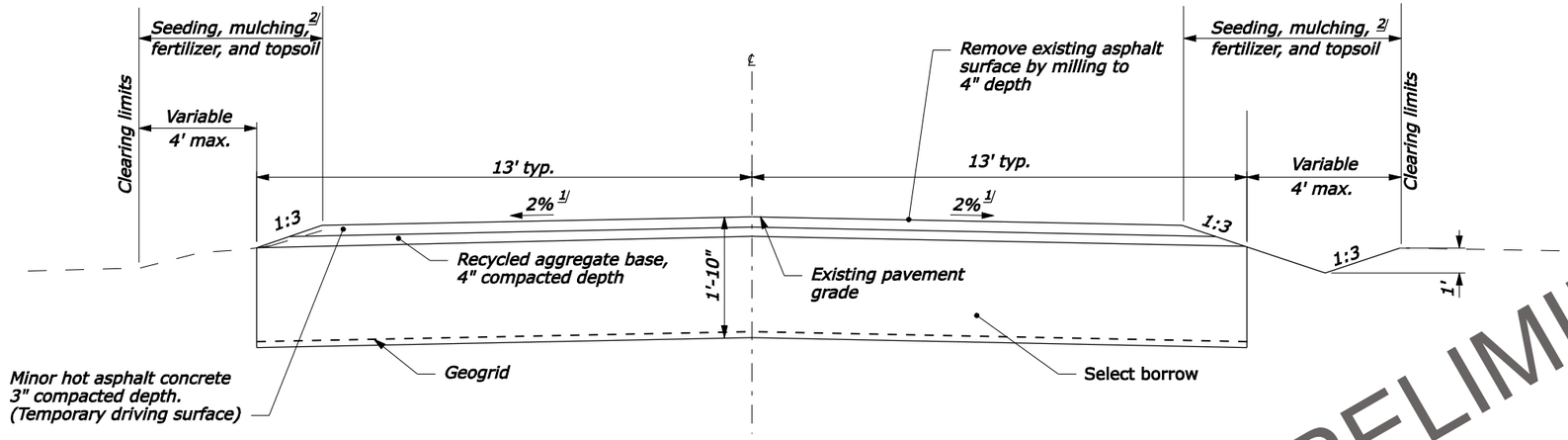


**SUBEXCAVATION AREA**
**TYPICAL SECTION**
**TEMPORARY DRIVING SURFACE**

PRELIMINARY

| SUBEXCAVATION LOCATIONS | | | |
|---|---|---|---|
| Location | | Side | Length |
| 235+66 | 236+97 | LT/RT | 131 |
| 237+47 | 238+78 | LT | 131 |
| 238+78 | 240+74 | LT/RT | 197 |

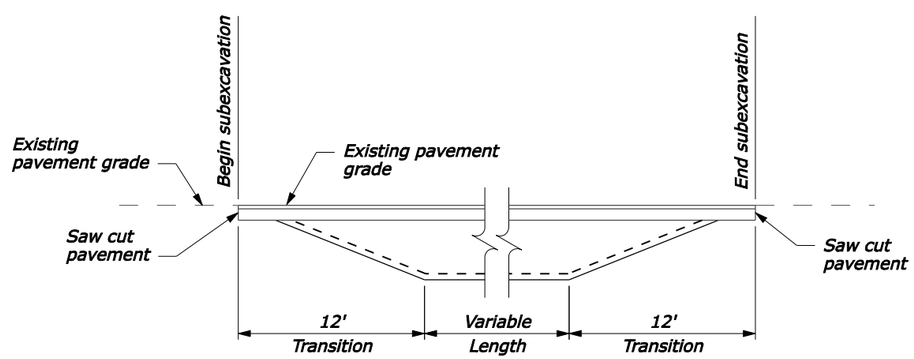


PROFILE
**SUBEXCAVATION TRANSITION DETAIL**

## NOTE:

1. Conserve topsoil and vegetation from the existing roadway shoulders and ditch line in subexcavation areas. Place conserved topsoil adjacent to shoulders after final paving. Place aggregate topsoil under conserved topsoil as necessary to construct a smooth slope between finished grade and existing ground.
2. Subexcavate area to a depth 1'-10" below the existing pavement elevation.
3. Remove existing asphalt pavement to a 4" depth by milling under section 310. Conserve the milled material for use as recycled base.
4. See Sheet C.2 for final pavement structure details

## FOOTNOTE:

1/ Match superelevation or minimum 2% crown.

2/ See Fill Slope Detail, sheet C.3.

NPS Pkg. No. 007334 NPS Drwg. No. 105/41956

NO SCALE

# SUBEXCAVATION AREAS

$PATH$ | $DATE$ | Designed by: | Checked by: | --/---

| STATE | PROJECT | SHEET NUMBER |
|---|---|---|
| WA | PRA-MORA 10(11) | C.6 |

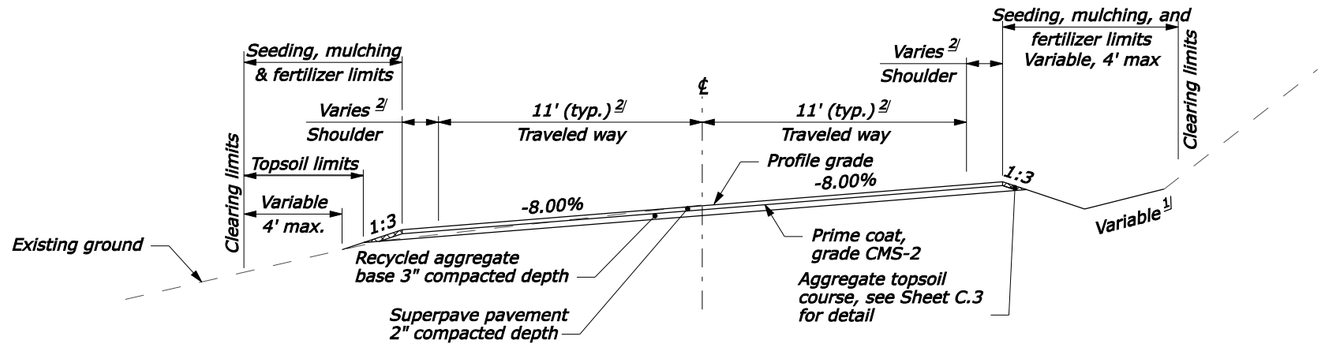


**DEER CREEK BRIDGE**
**TYPICAL SECTION**
273+06 to 273+42

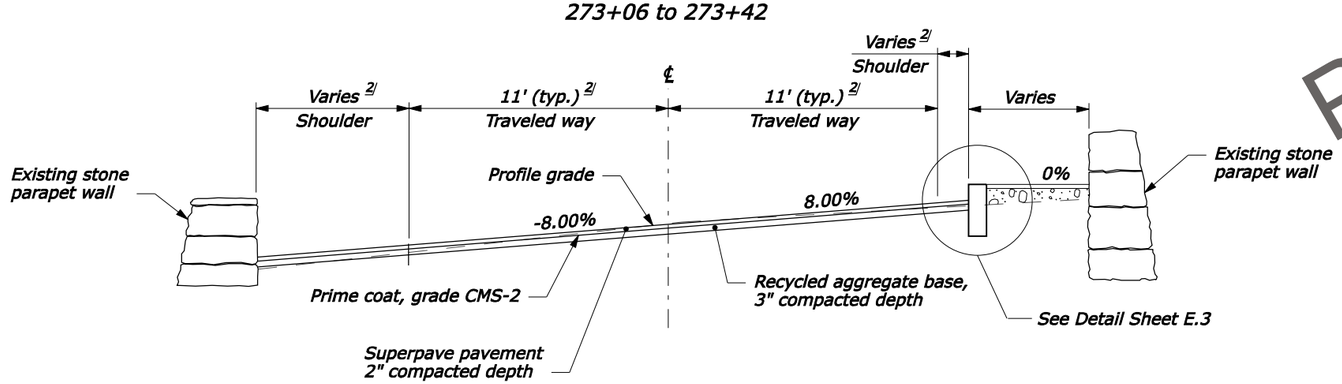


**DEER CREEK BRIDGE**
**TYPICAL SECTION**
273+42 to 274+01
274+90 to 275+36

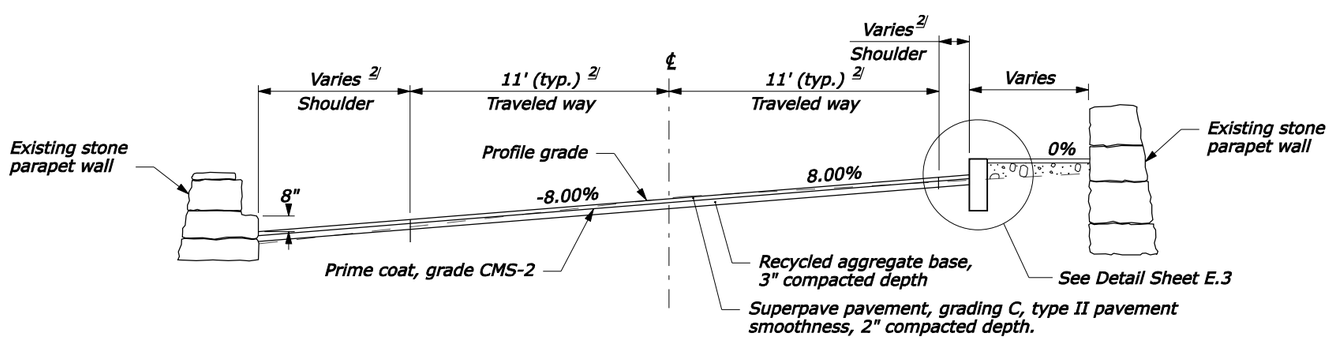


**DEER CREEK BRIDGE**
**TYPICAL SECTION**
274+01 to 274+90

PRELIMINARY

## NOTE:

1. Remove existing asphalt pavement surfacing to the bottom of recycled aggregate base by milling under section 310. The depth of milling varies as shown in the project cross sections. Conserve the milled material for use as recycled aggregate base.
2. See Sheet C.7 for connection details.

## FOOTNOTE:

1/ Construct slopes as shown in the Staking Report (See FAR 52.236-4).

2/ Pavement width varies. Construct widths as shown in the Staking Report (See FAR 52.236-4).

NPS Pkg. No. 007334 NPS Drwg. No. 105/41956

**DEER CREEK BRIDGE**

$PATH$ | $DATE$ | Designed by: --/--- | Checked by: --/---

| STATE | PROJECT | SHEET NUMBER |
|---|---|---|
| WA | PRA MORA 10(11) | D.2 |

## PLAN LEGEND:

- Obliterate roadway
- 5 — Existing Road Centerline w/Stationing
- Wall
- Ditch

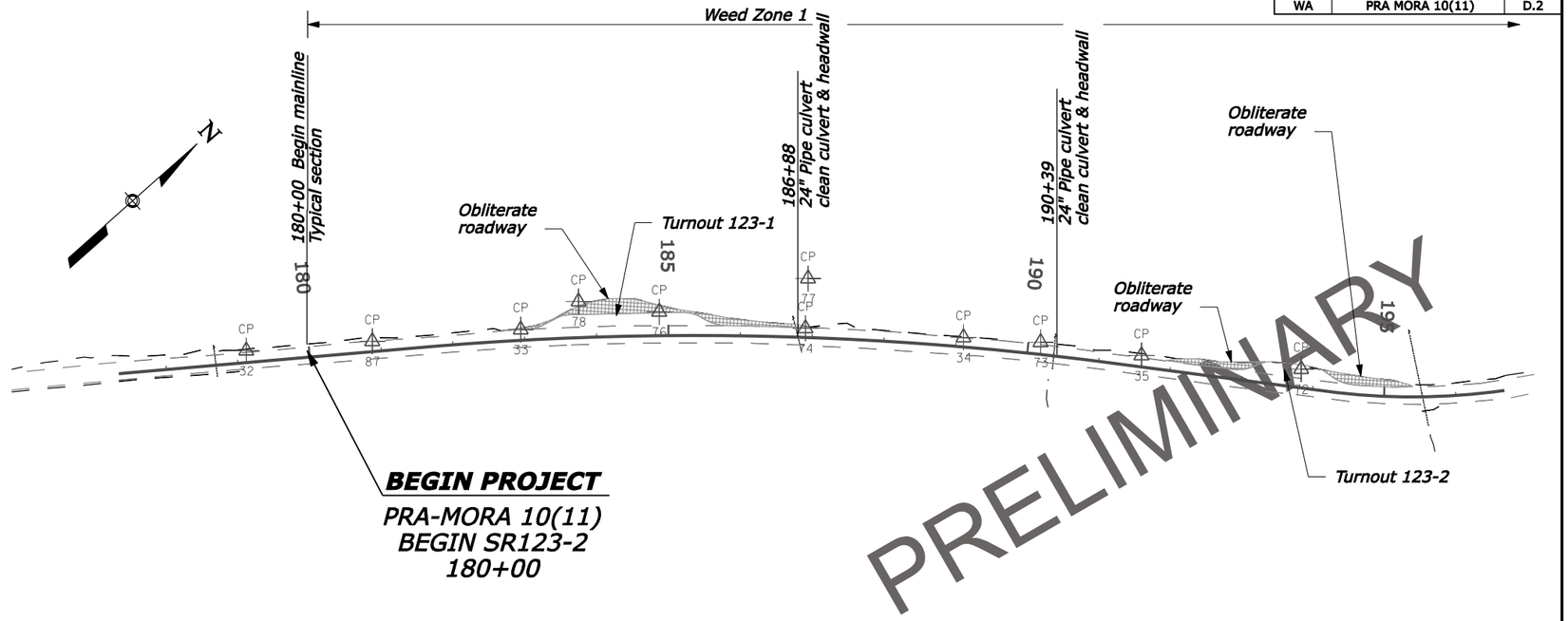


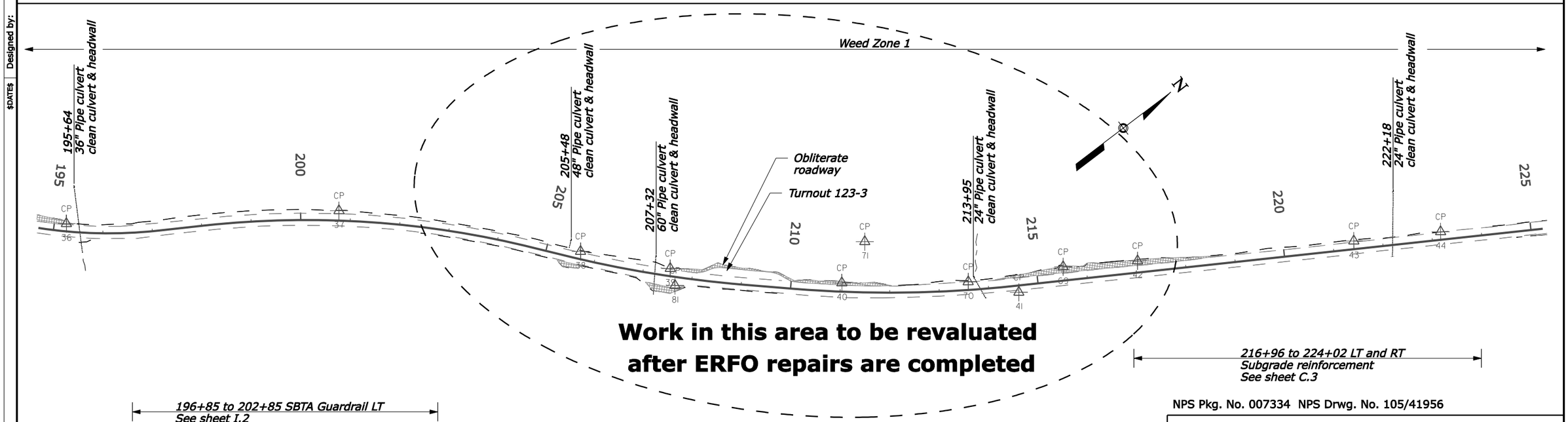


NPS Pkg. No. 007334 NPS Drwg. No. 105/41956

# SR 123
# 180+00 TO 225+00

--/---
Checked by:
--/---
Designed by:
$DATE$
$PATH$

| STATE | PROJECT | SHEET NUMBER |
|---|---|---|
| WA | PRA-MORA 10(11) | D.3 |

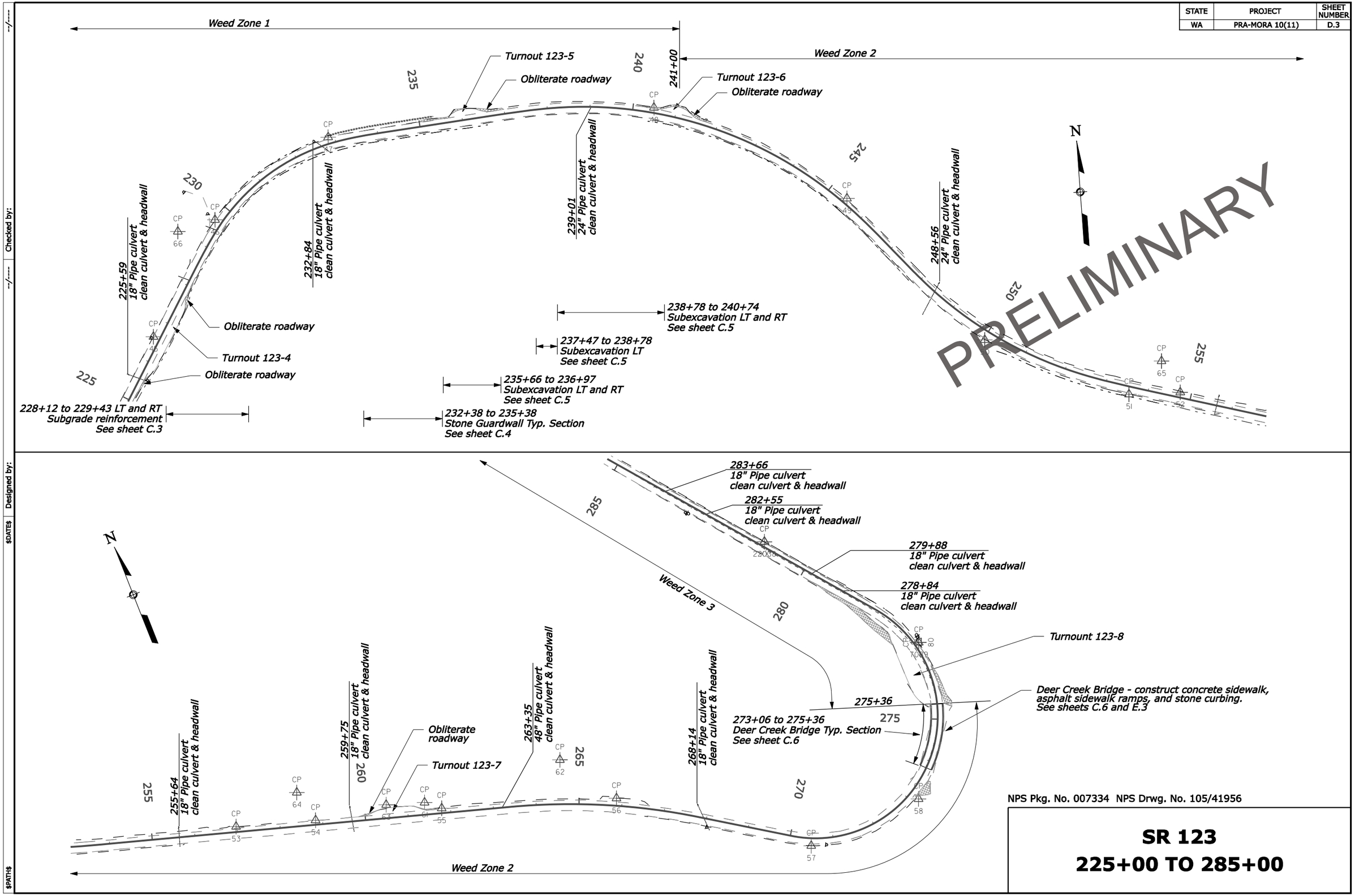


NPS Pkg. No. 007334 NPS Drwg. No. 105/41956

# SR 123
# 225+00 TO 285+00

Designed by: $DATE$ Checked by: --/---- --/---- $PATH$

| STATE | PROJECT | SHEET NUMBER |
|---|---|---|
| WA | PRA-MORA 10(11) | D.4 |

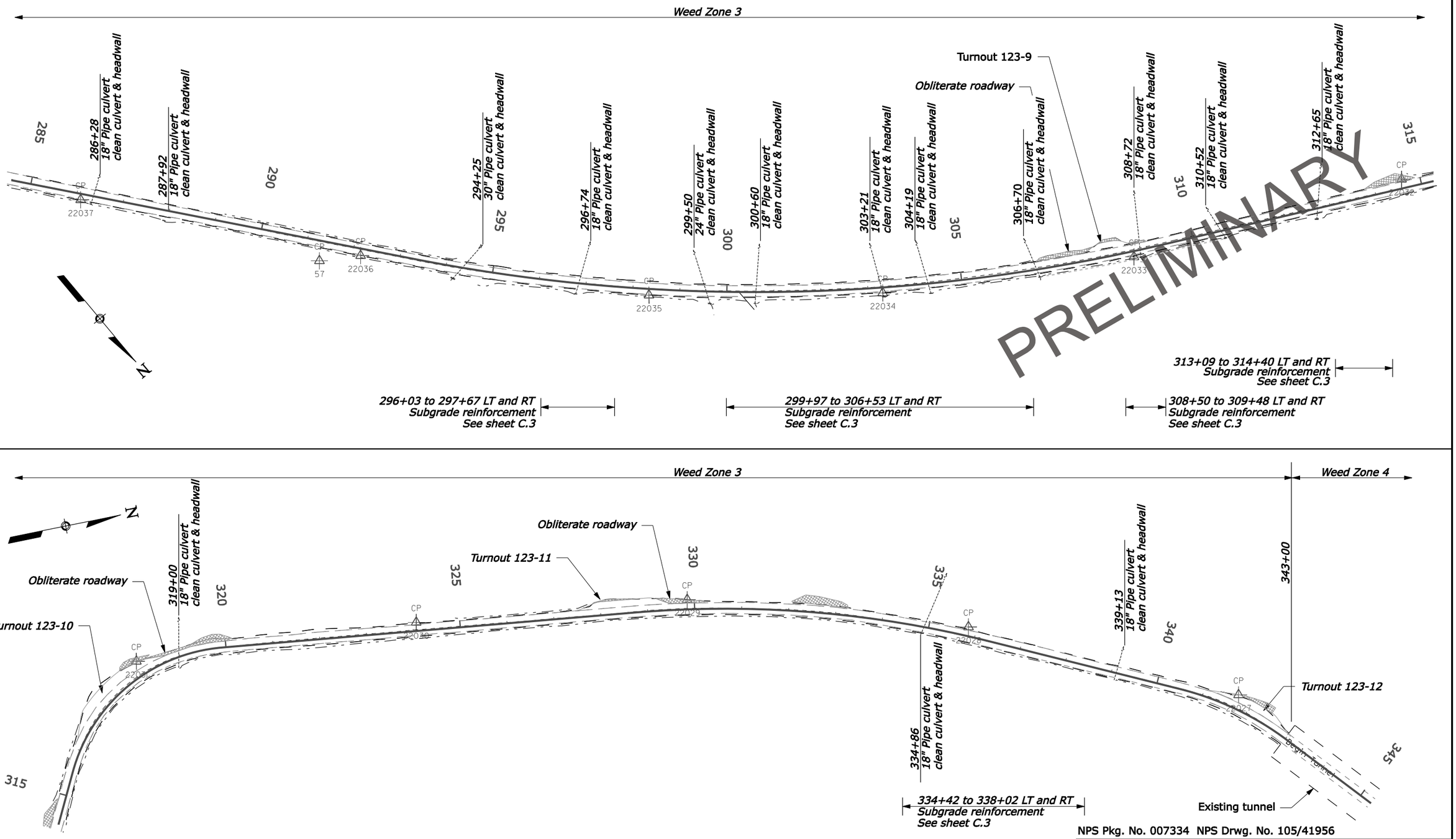


NPS Pkg. No. 007334 NPS Drwg. No. 105/41956

# SR 123
# 285+00 TO 345+00

Checked by: --/---
Designed by: --/---
$DATE$
$PATH$

| STATE | PROJECT | SHEET NUMBER |
|---|---|---|
| WA | PRA-MORA 10(11) | D.5 |

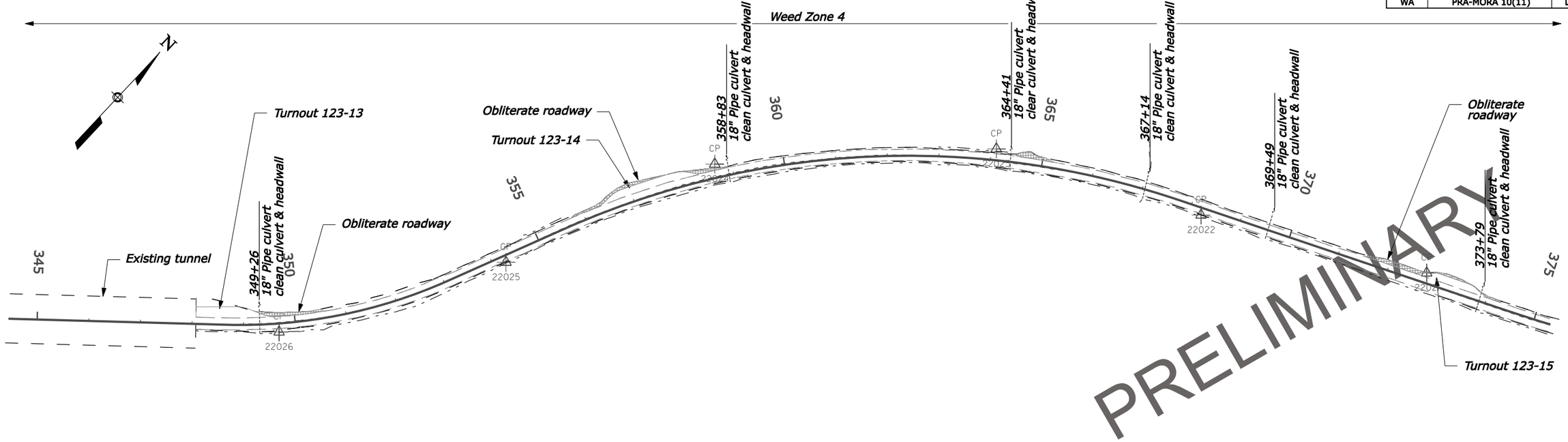


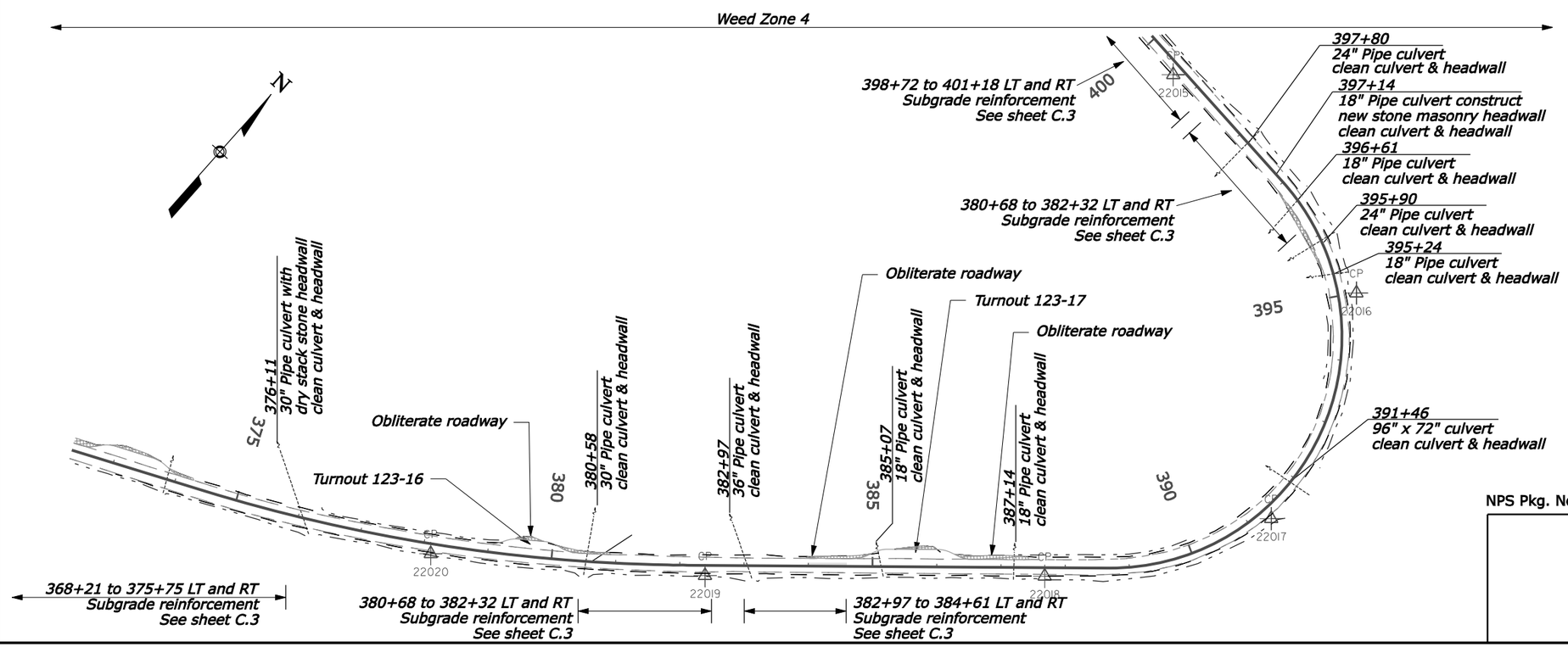


NPS Pkg. No. 007334 NPS Drwg. No. 105/41956

# SR 123
# 345+00 TO 400+00

Checked by: --/---
Designed by: --/---
$DATE$
$PATH$

| STATE | PROJECT | SHEET NUMBER |
|---|---|---|
| WA | PRA-MORA 10(11) | D.6 |

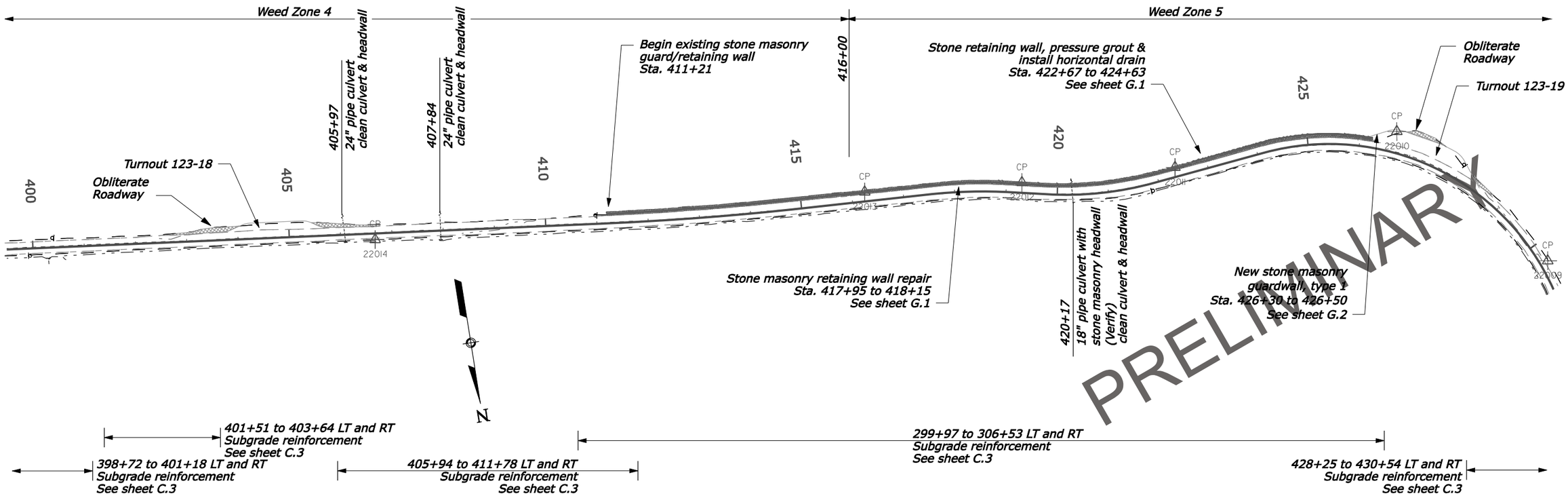


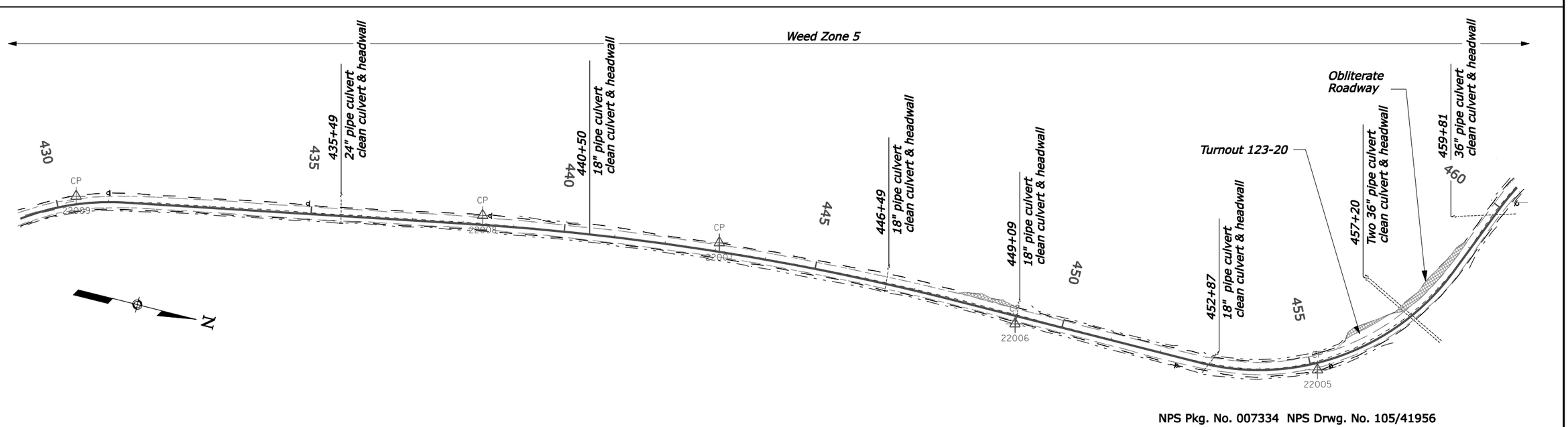


NPS Pkg. No. 007334 NPS Drwg. No. 105/41956

# SR 123
# 400+00 TO 460+00

Checked by: --/---
Designed by: --/---
$DATE$
$PATH$

| STATE | PROJECT | SHEET NUMBER |
|---|---|---|
| WA | PRA-MORA 10(11) | D.7 |

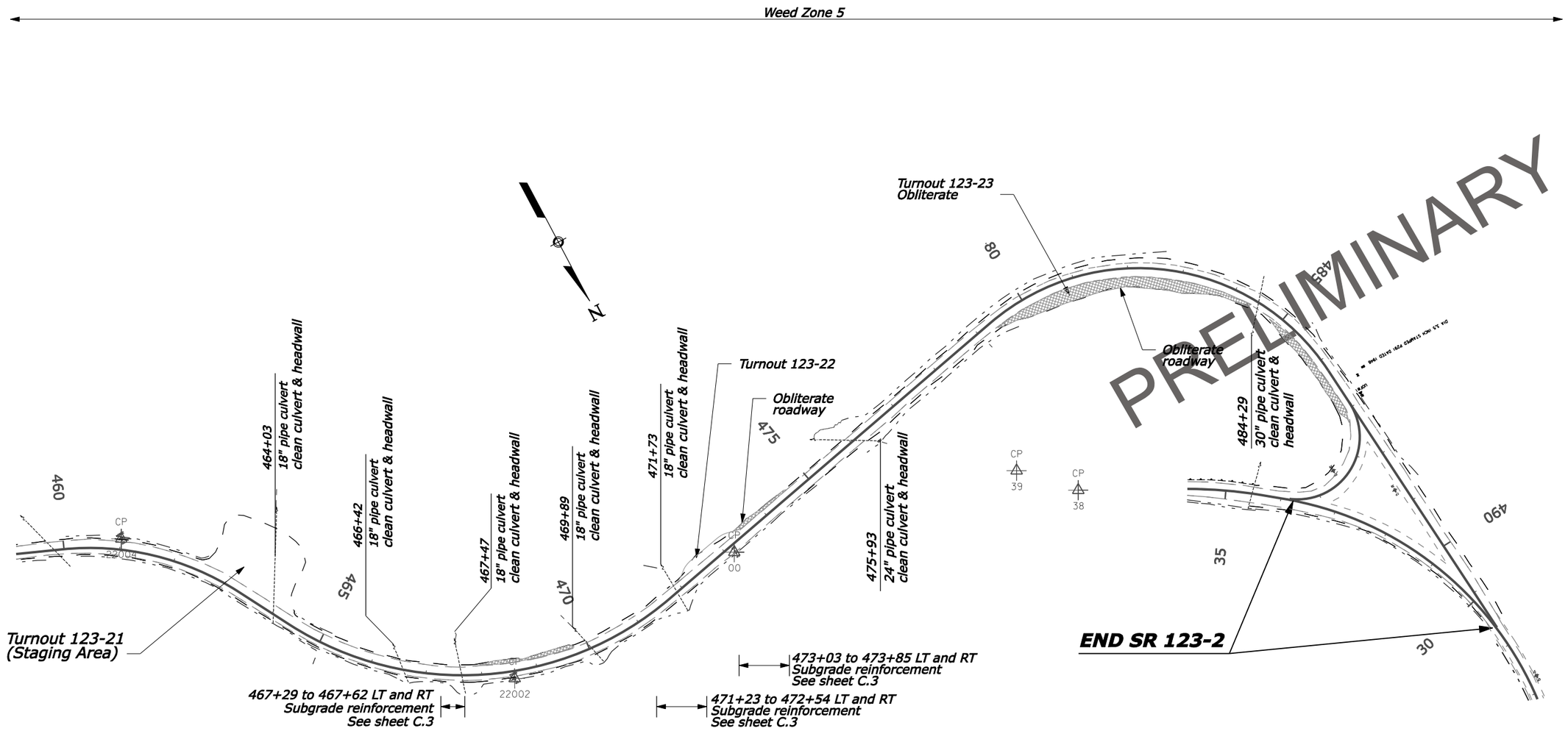


NPS Pkg. No. 007334 NPS Drwg. No. 105/41956

# SR 123
# 460+00 TO CAYUSE PASS

F:\Washton\MORA\MORA1011\Design\mora1011_pl&pl_ff.dgn | _DATE_ " + " _FILE_ | Designed by: --/---- | Checked by: --/----

| STATE | PROJECT | SHEET NUMBER |
|---|---|---|
| WA | PRA-MORA 10(11) | D.8 |

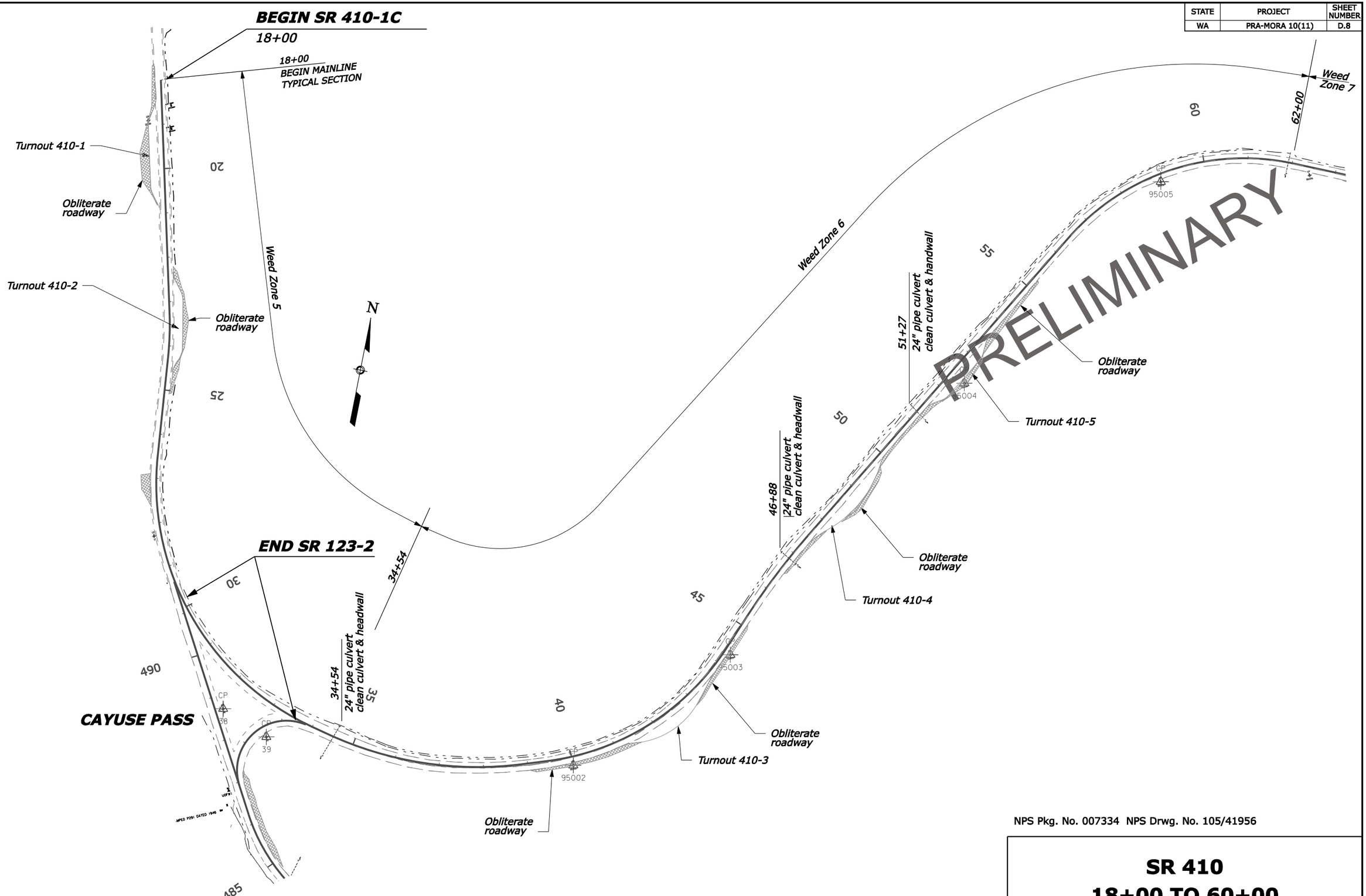


NPS Pkg. No. 007334 NPS Drwg. No. 105/41956

**SR 410**
**18+00 TO 60+00**

$PATH$ | $DATE$ | Designed by: --/---- | Checked by: --/----

| STATE | PROJECT | SHEET NUMBER |
|---|---|---|
| WA | PRA-MORA 10(11) | D.9 |

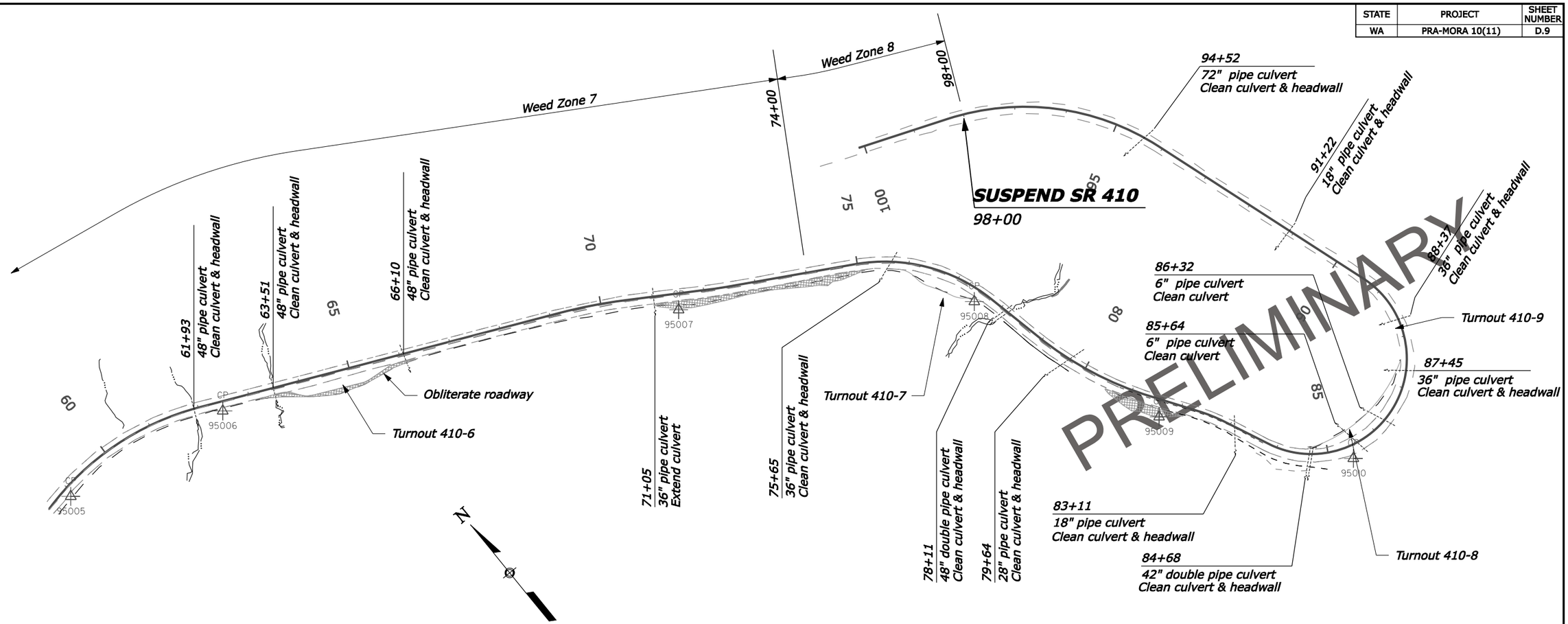


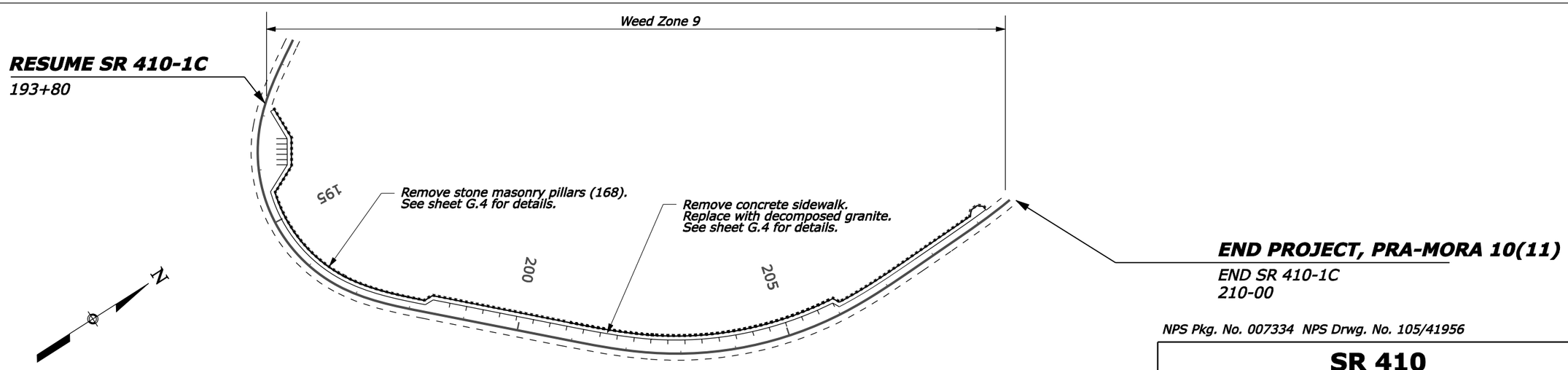


NPS Pkg. No. 007334 NPS Drwg. No. 105/41956

**TIPSOO WALKWAY RECONSTRUCTION**
**(See Sheet G.4)**

**SR 410**
**60+00 TO 98+00**
**193+80 TO 210+00**

$PATH$ | $DATE$ | Designed by: --/--- | Checked by: --/---

| STATE | PROJECT | SHEET NUMBER |
|---|---|---|
| WA | PRA-MORA 10(11) | E.2 |

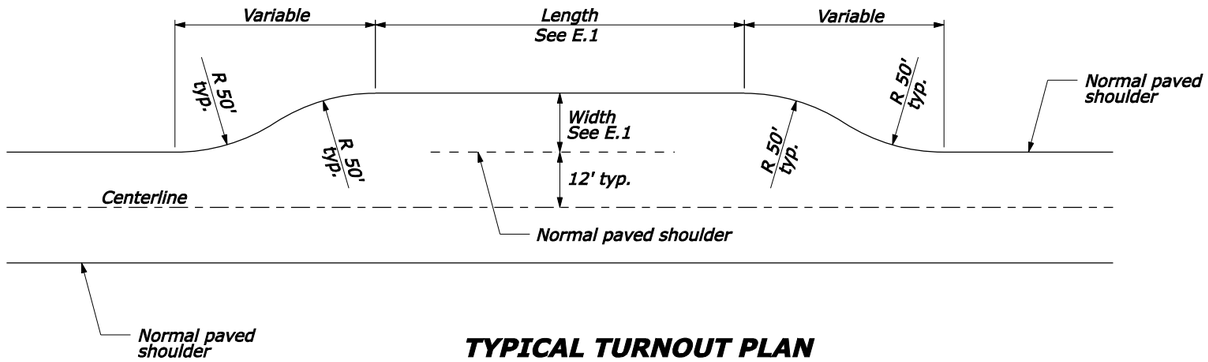


**TYPICAL TURNOUT PLAN**

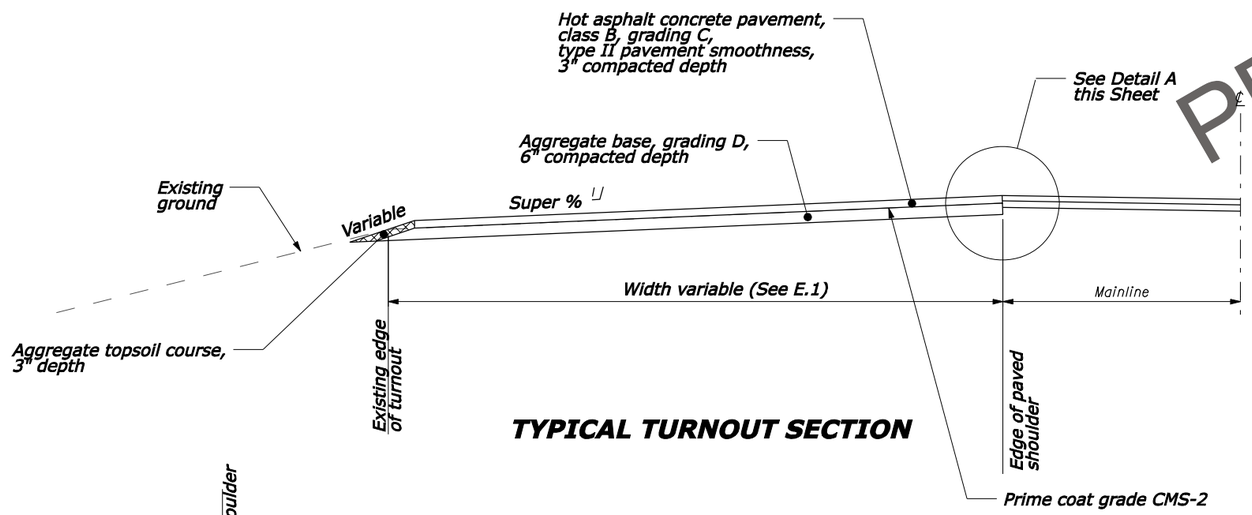


**TYPICAL TURNOUT SECTION**

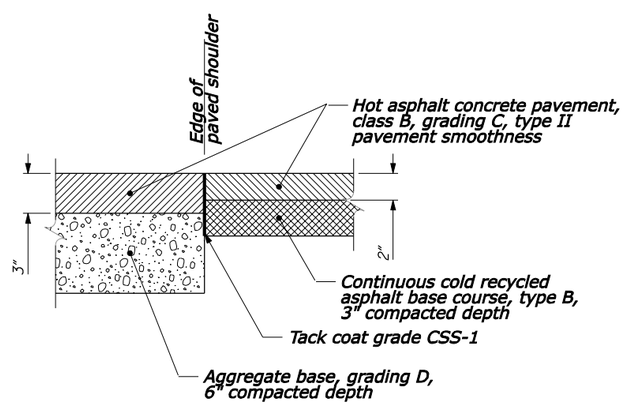


**DETAIL A**

NOTE:

1. Turnout locations and dimensions may be adjusted by the CO to fit field conditions.

FOOTNOTE:

[1] Construct slopes as shown in the cross sections.

NPS Pkg. No. 007334 NPS Drwg. No. 105/41956

NO SCALE

# TURNOUT DETAILS

PRELIMINARY

$PATH$ $DATE$ Designed by: --/--- Checked by: --/---

| STATE | PROJECT | SHEET NUMBER |
|---|---|---|
| WA | PRA-MORA 10(11) | E.3 |

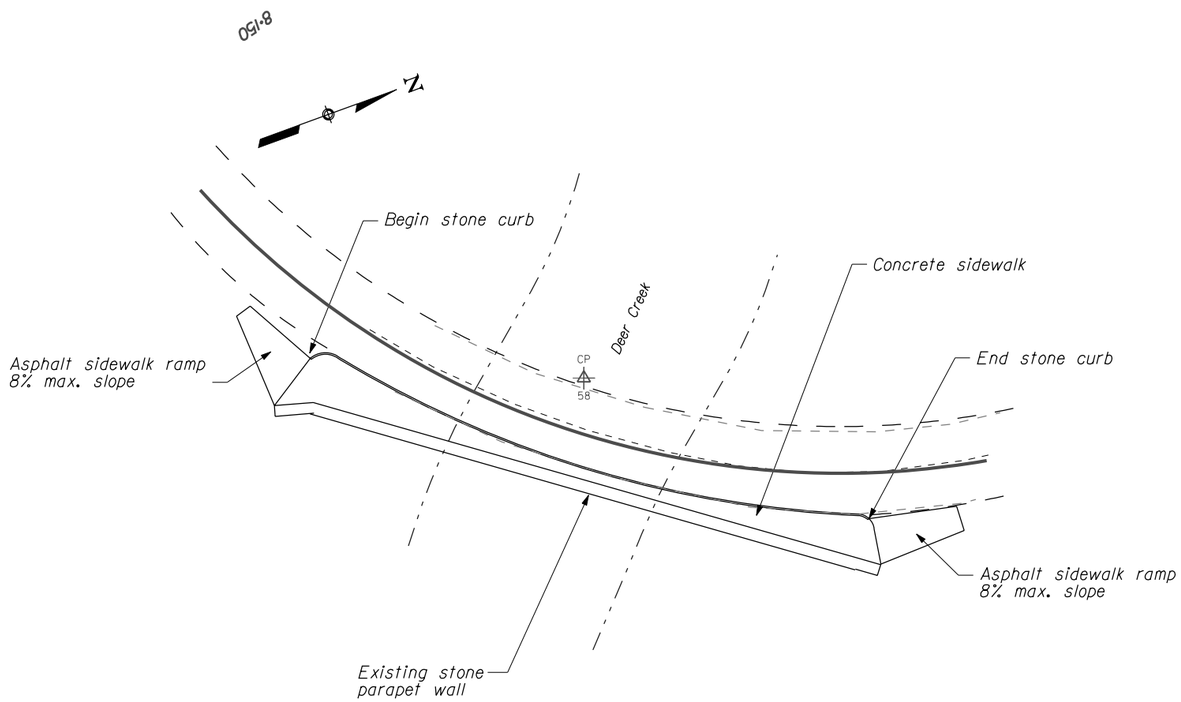


DEER CREEK BRIDGE PLAN VIEW

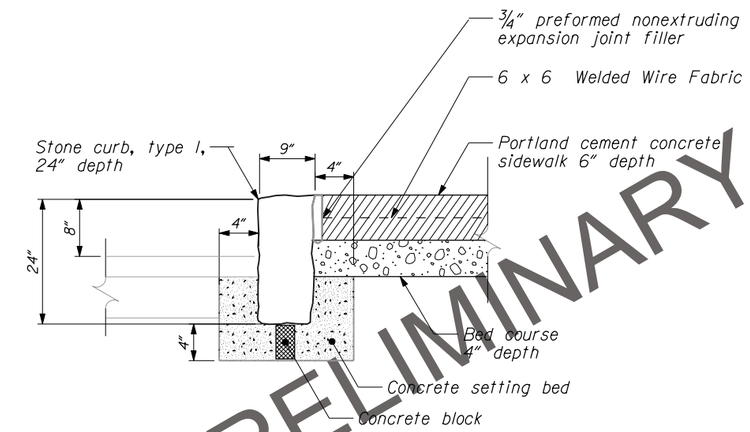


STONE CURB TYPE 1, 24" DEPTH, AND PORTLAND CEMENT CONCRETE SIDEWALK DETAILS

PRELIMINARY

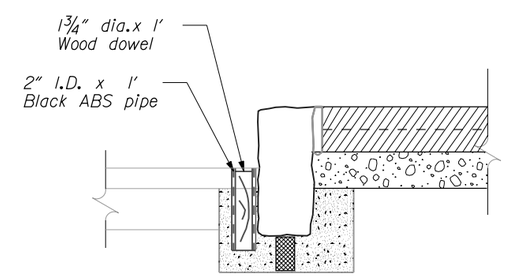


SNOWPOLE HOLDER DETAIL FOR STONE CURB

NOTE:

1. Install expansion joints at a 20' interval. Place 3/4" preformed expansion joint filler in these joints.
2. Construct asphalt sidewalk ramps from the sidewalk to the pavement at a 8% max. slope as directed by the CO.

NPS Pkg. No. 007334 NPS Drwg. No. 105/41956

# DEER CREEK BRIDGE SIDEWALK AND CURB DETAILS

$PATH$ | $DATE$ | Designed by: | Checked by: | --/--- | --/---

| STATE | PROJECT | SHEET NUMBER |
|---|---|---|
| WA | PRA-MORA 10(11) | G.1 |

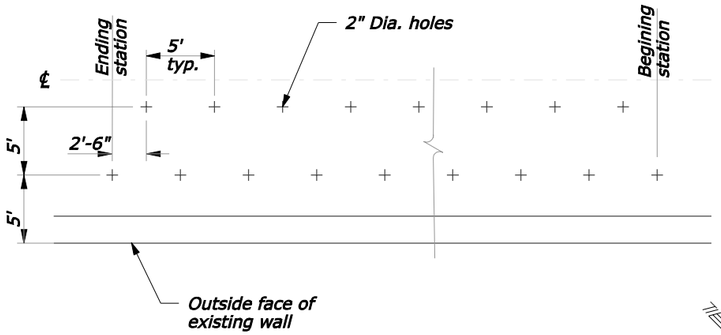


**TYPICAL GROUT DRILLING PLAN**
422+67 to 424+63

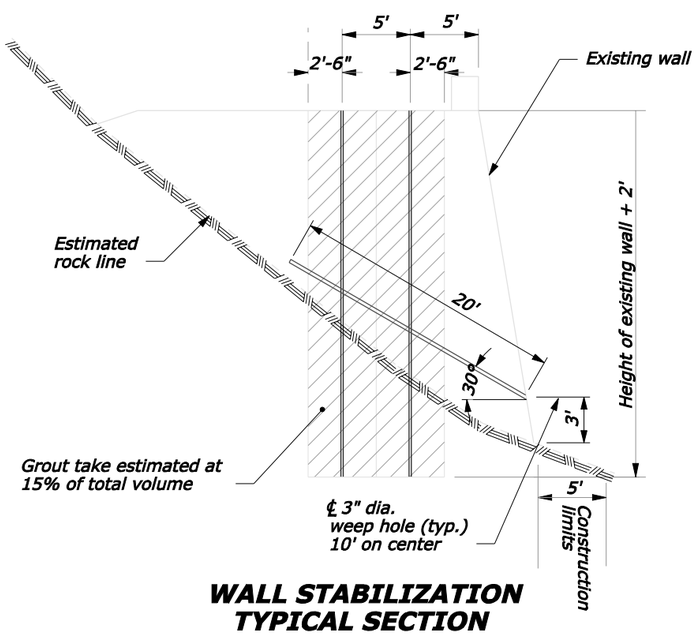


**WALL STABILIZATION TYPICAL SECTION**
422+67 to 424+63

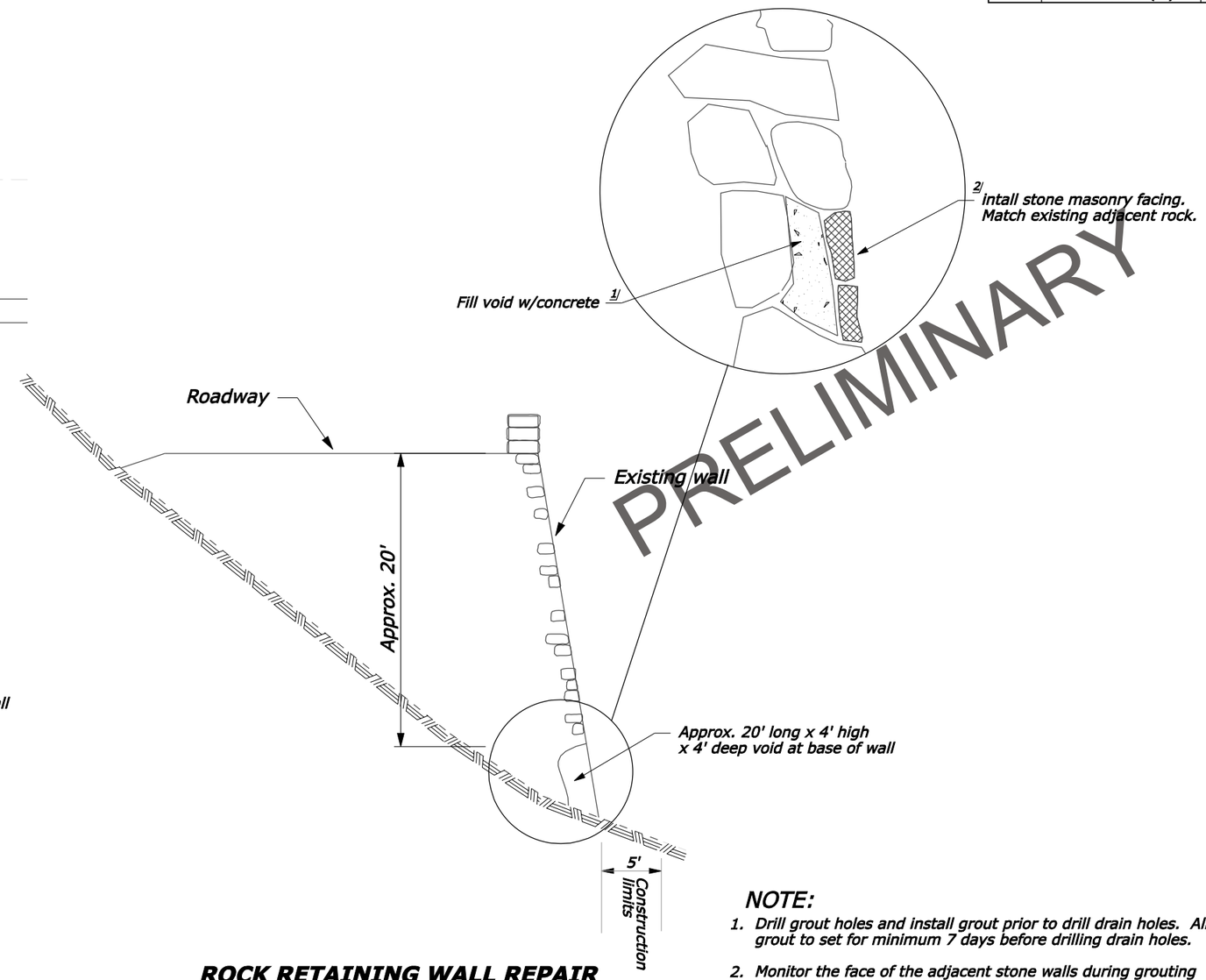


**ROCK RETAINING WALL REPAIR TYPICAL SECTION**
417+95 to 418+15

PRELIMINARY

## NOTE:

1. Drill grout holes and install grout prior to drill drain holes. Allow grout to set for minimum 7 days before drilling drain holes.
2. Monitor the face of the adjacent stone walls during grouting operations. If grout flows out of the face at any time during the grouting operations, halt the grout injection and adjust the lifts and/or pressure. Clean up all grout spills.

## FOOTNOTE:

1/ Place concrete forms leaving sufficient room to allow installation of stone masonry that matches adjacent walls

2/ Install stone masonry matching adjacent walls.

NPS Pkg. No. 007334 NPS Drwg. No. 105/41956

# WALL STABILIZATION PLAN

$PATH$ | $DATE$ | Designed by: --/--- | Checked by: --/---

| STATE | PROJECT | SHEET NUMBER |
|---|---|---|
| WA | PRA-MORA 10(11) | G.2 |

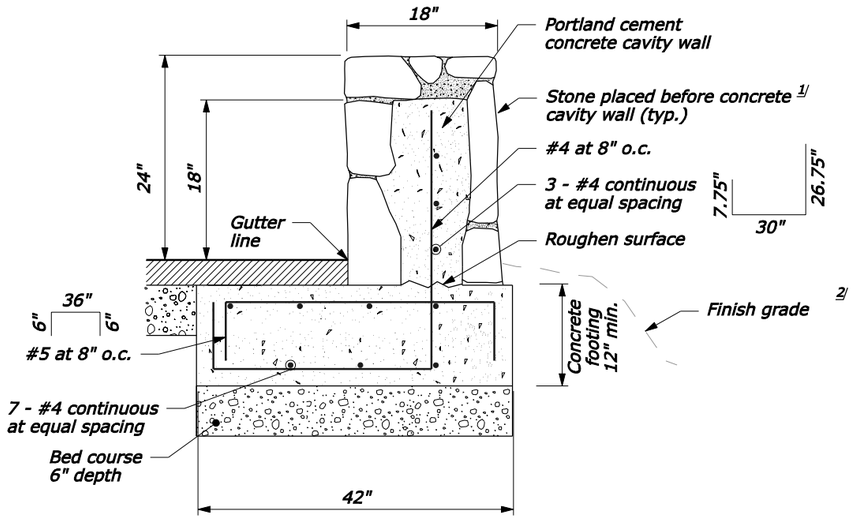


**TYPICAL SECTION**
**HIGH CRENELATION**

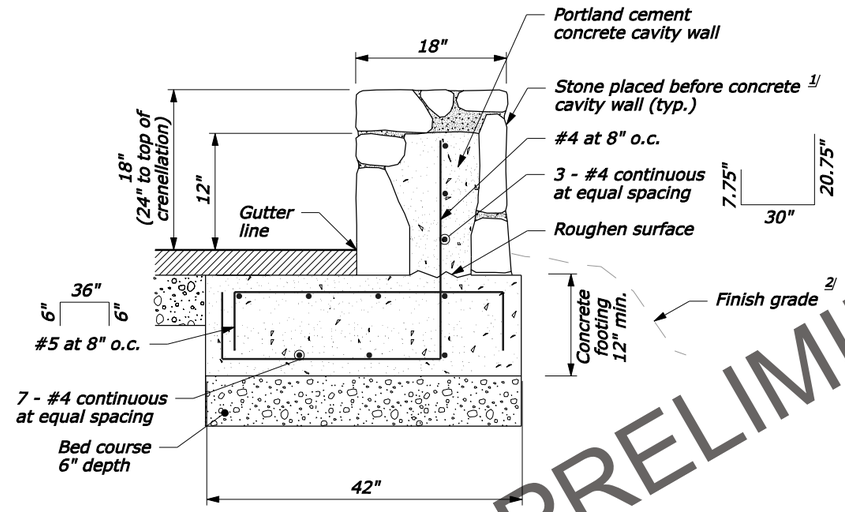


**TYPICAL SECTION**
**LOW CRENELATION**

PRELIMINARY

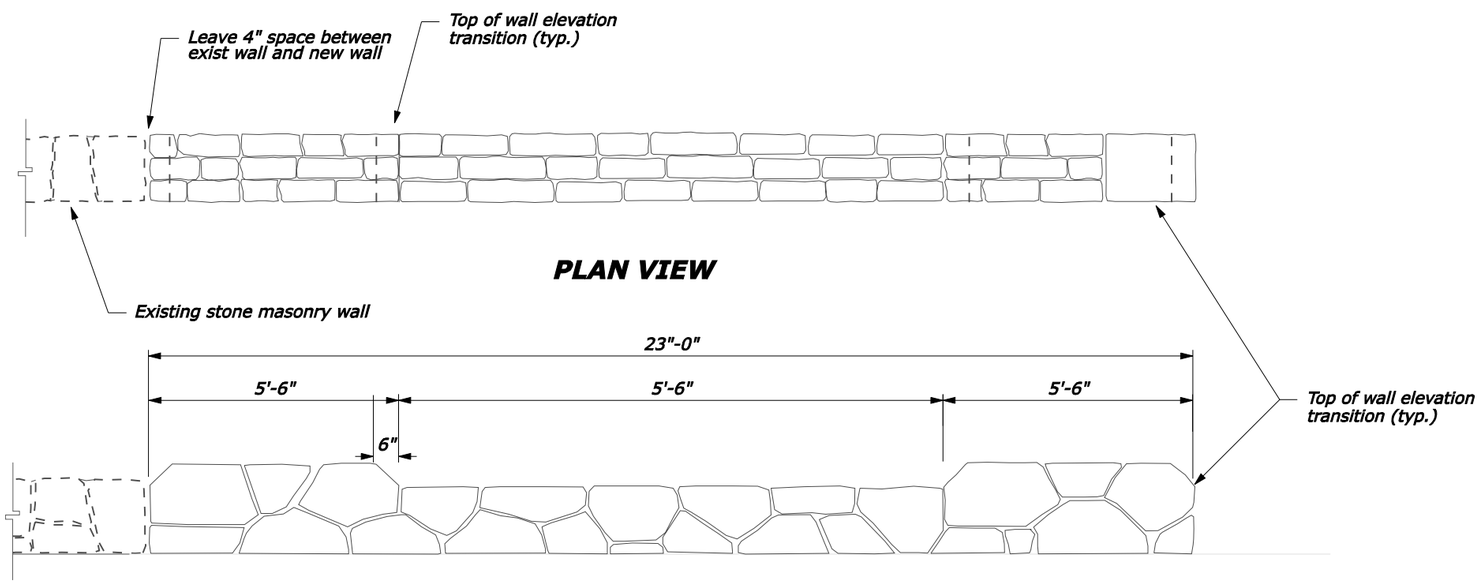


**PLAN VIEW**

**ELEVATION VIEW**
**ON ROADWAY SIDE OF WALL**

## NOTE:

1. Stone pattern shown is subject to the requirements of Section 620. Use similar stone pattern on opposite face.
2. Minimum splice length of 12 inches for all horizontal bars.

## FOOTNOTE:

1/ Place stone masonry on both sides before placing concrete in cavity wall. Portland cement concrete core will vary depending on stone size.

2/ Place topsoil to 6" minimum depth over footing

NPS Pkg. No. 007334 NPS Drwg. No. 105/41956

# STONE MASONRY GUARDWALL (RANDOM RUBBLE CAVITY) TYPICAL SECTIONS

Checked by: --/---
Designed by: $DATE$
$PATH$

| STATE | PROJECT | SHEET NUMBER |
|---|---|---|
| WA | PRA-MORA 10(11) | G.3 |

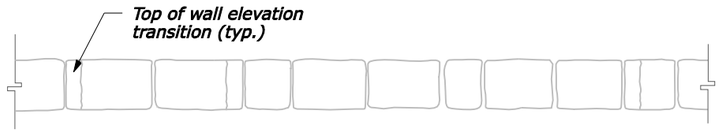


**PLAN VIEW**

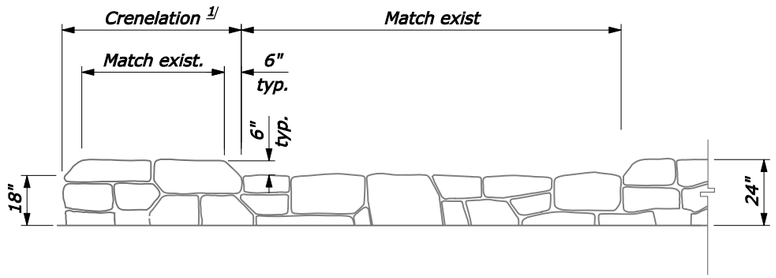


**ELEVATION VIEW**

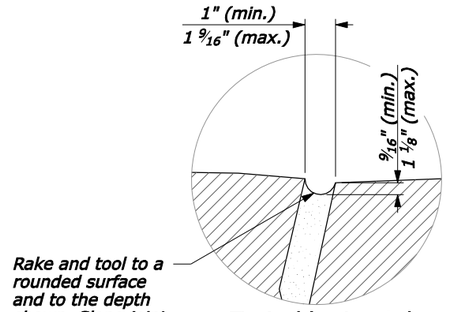


*Typical horizontal surface joint*

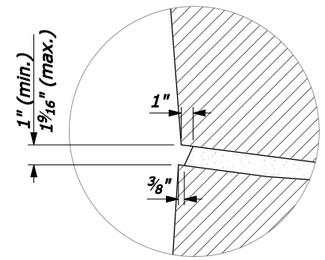


*Typical vertical surface joint*

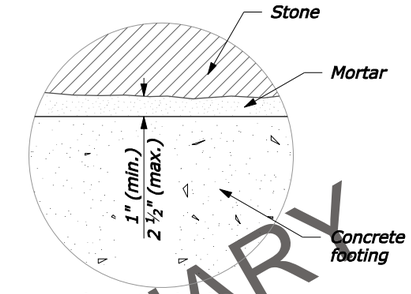


*Typical mortar bed for stone masonry on concrete footing*

**MASONRY MORTAR JOINT AND BED DETAILS**

PRELIMINARY

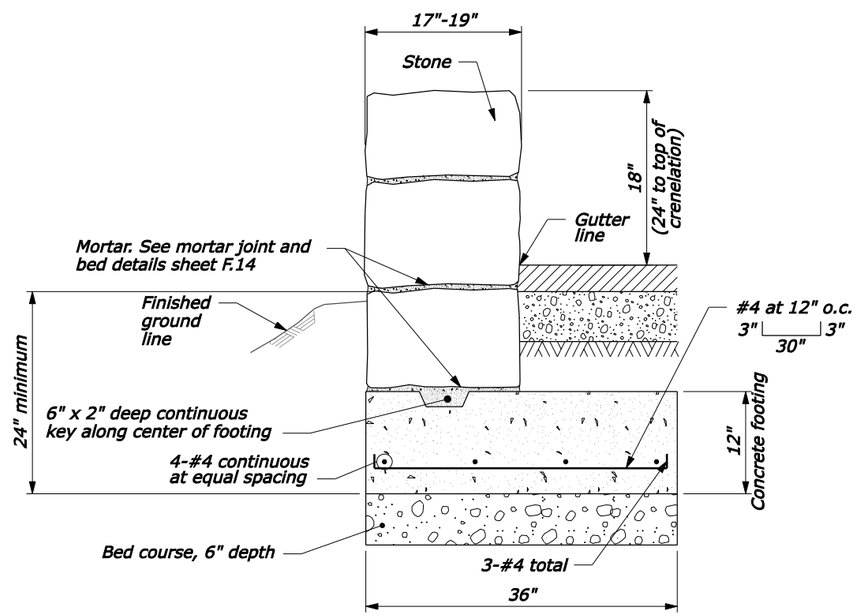


**TYPICAL SECTION WITH CONCRETE FOOTING**

## NOTE:

1. General shape and character requirements of stone:
   -Shapes are angular (square or rectangular). Edges are rounded.
   -Generally uniform thickness. Do not use round cobbly shapes.
   -Do not use stones that have indentations greater than 2 inches at deepest point on any face.
   -All stones exposed on top of wall, must be full depth of wall.
2. Stone pattern shown is subject to the requirements of Section 620.
3. Create irregular joint where new or reset stone masonry joins existing wall. When removing existing stone masonry wall, remove whole stones only, creating an irregular seam. Do not cut existing stones.
4. Minimum splice length of 12 inches for all horizontal bars.

## FOOTNOTE:

1/ Construct crenelation to match existing, adjacent crenelation.

# REMOVE AND RESET STONE MASONRY GUARDWALL DETAILS

--/---- Checked by: --/---- Designed by: $DATE$ $PATH$

| STATE | PROJECT | SHEET NUMBER |
|---|---|---|
| WA | PRA-MORA 10(11) | G.4 |

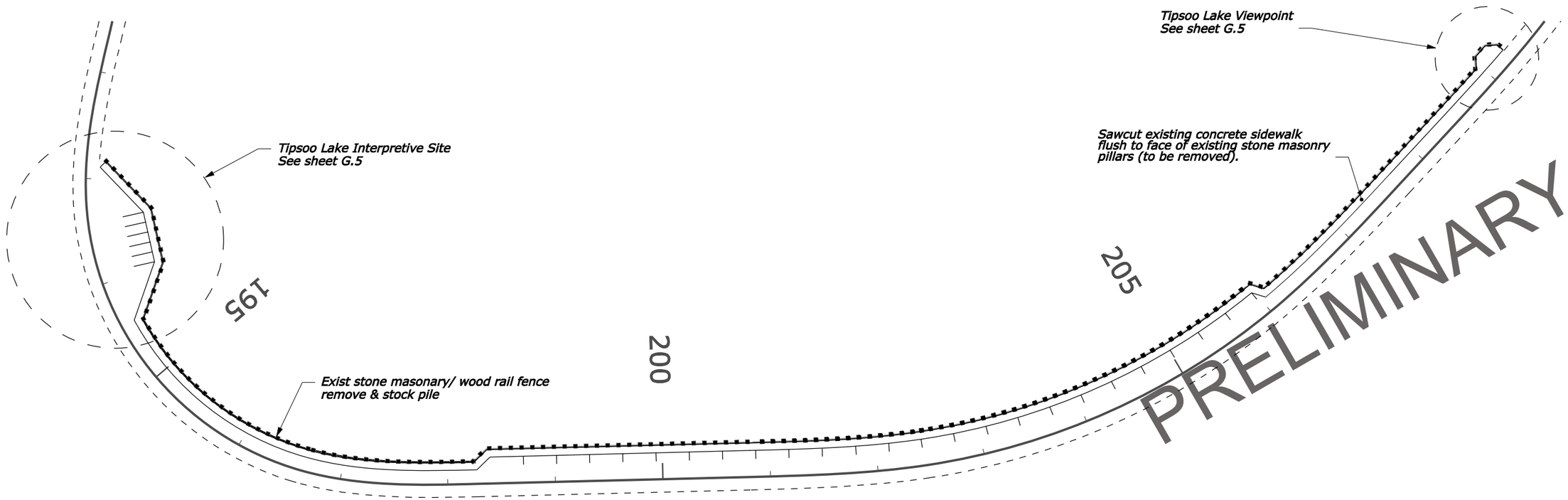


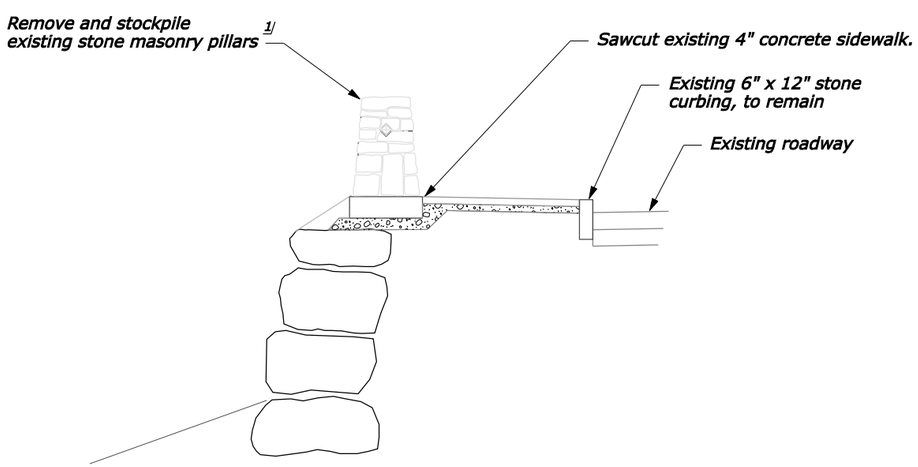


**EXISTING SIDEWALK TYPICAL SECTION**

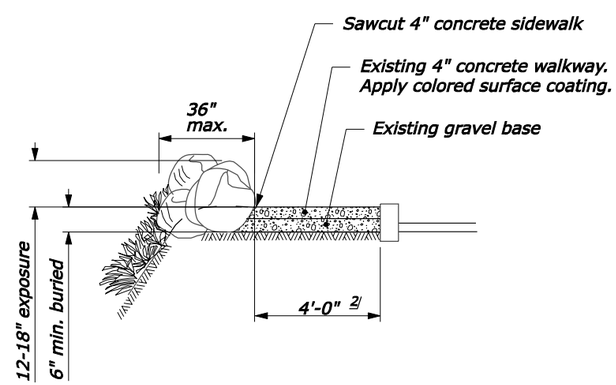


Section

**PROPOSED WALKWAY TYPICAL SECTION**

## NOTE:

1. Remove all existing stone masonry pillars.
2. After removing existing stone masonry pillars, sawcut existing concrete walkway, then apply colored coating to walkway.
   .

## FOOTNOTE:

1/ Approximate weight of stone masonry pillar - 2,200 lbs. Stockpile location to be determined. (WA State Parks to take posession).

2/ Walkway width between face of boulders and edge of existing stone curb not to be less than 48".

3/ Boulders to be no less than 18" or greater than 30" in diameter. 60% of boulder shall be greater than 24" in diameter.

# TIPSOO WALKWAY RECONSTRUCTION

F:\Washton\MORA\MORA1011\Design\mora12341dtp.dgn _DATE_ " + " _FILE_ Designed by: --/--- Checked by: --/---

| STATE | PROJECT | SHEET NUMBER |
|---|---|---|
| WA | PRA-MORA 10(11) | H.8 |

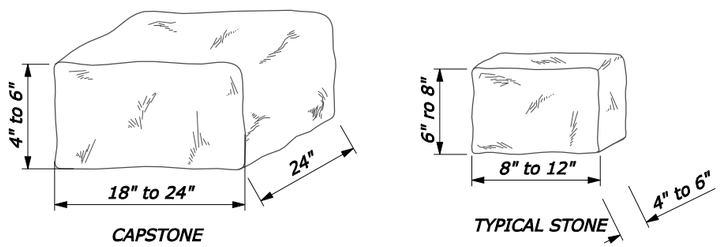


MASONRY STONE DETAILS

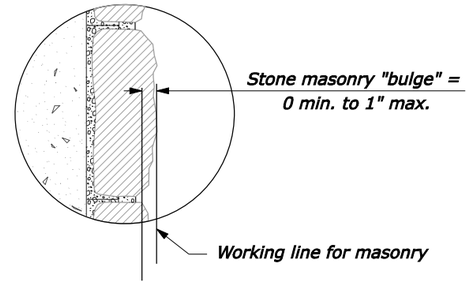


WORKLINE AND MASONRY BULGE DETAIL

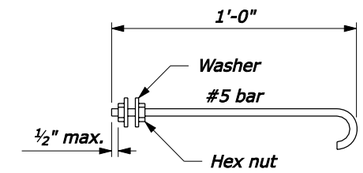


HOOK BOLT DETAIL

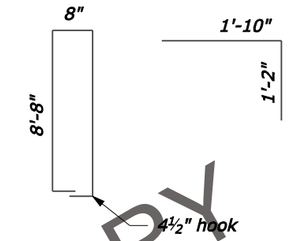


#4 BARS

PRELIMINARY

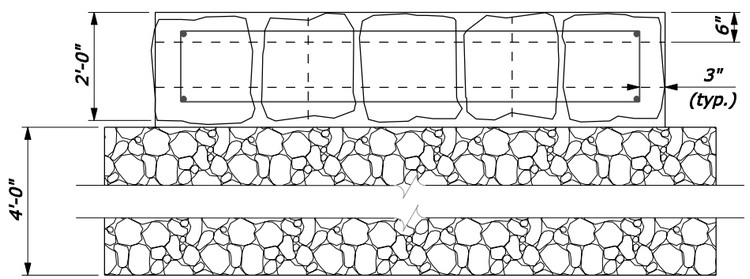


PLAN

| Headwall Parameters | | |
|---|---|---|
| D | H | W |
| 24" | 30" | 48" |
| 30" | 42" | 60" |
| 96" | 108" | 120" |

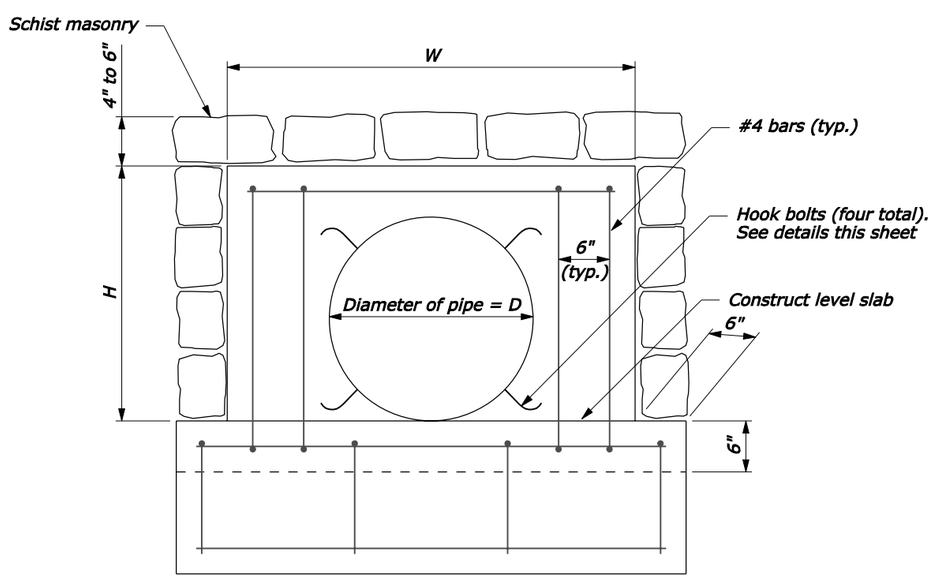


ELEVATION

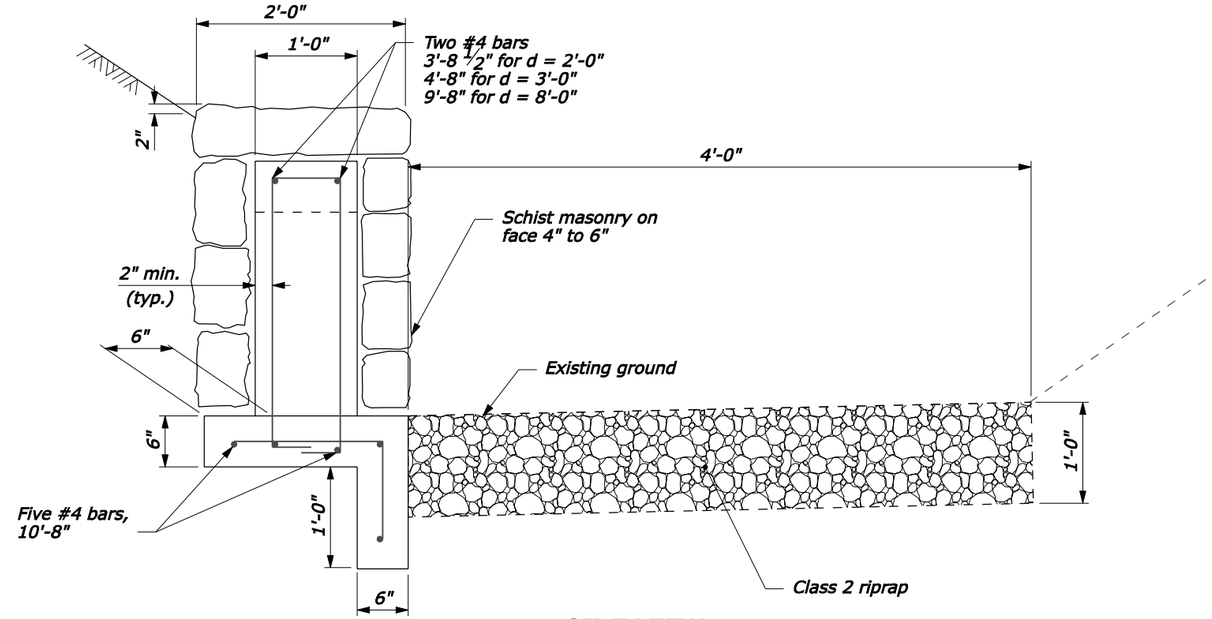


SIDE VIEW

**STONE MASONRY**
**HEADWALL DETAILS**
**SHEET 1 OF 2**

F:\Washton\WORA\MORA1011\Design\mora123410EC.dgn _DATE_ " + "_FILE_ Designed by: Checked by: --/---- --/----

| STATE | PROJECT | SHEET NUMBER |
|---|---|---|
| WA | PRA-MORA 10(11) | I.1 |

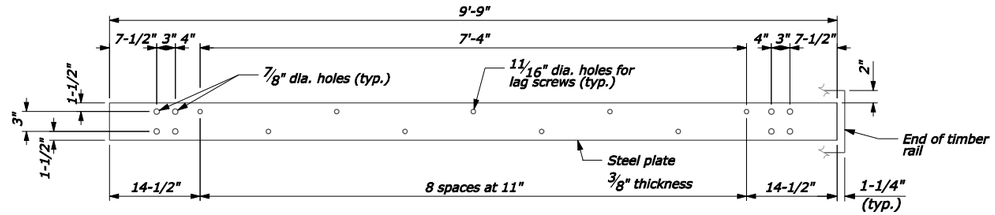


STEEL RAIL

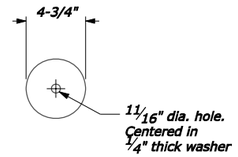


PLATE WASHER

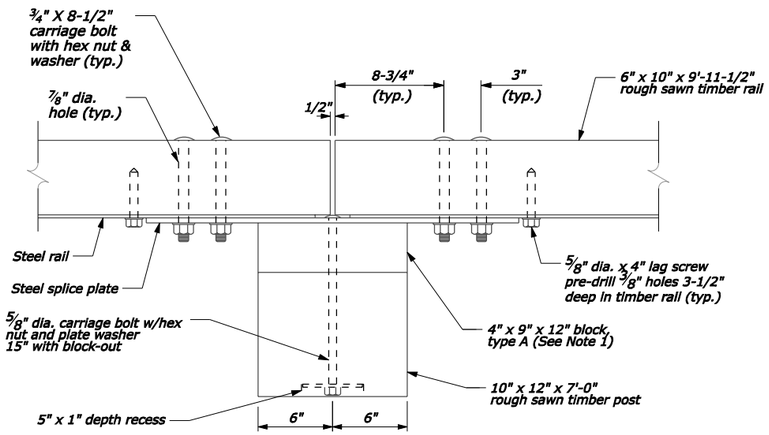


PLAN

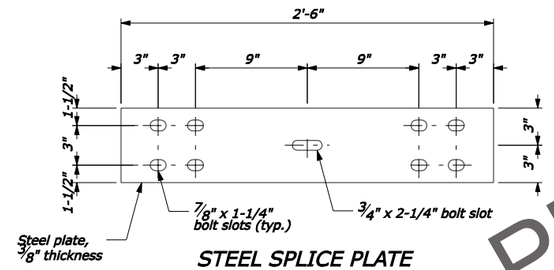


STEEL SPLICE PLATE

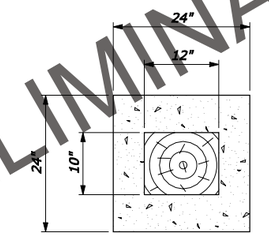


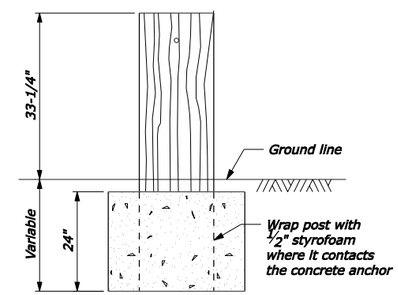


24" diameter round anchor is an acceptable alternative. Reduced size acceptable in solid rock as approved by the CO.

CONCRETE ANCHOR FOR SHORT GUARDRAIL POST

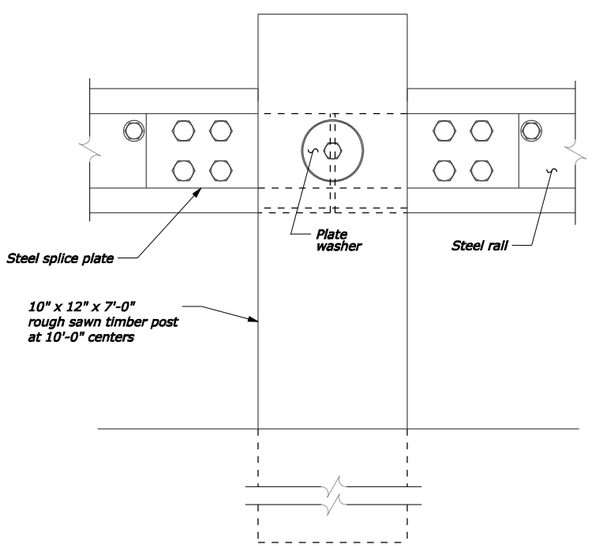


ELEVATION
POST CONNECTION

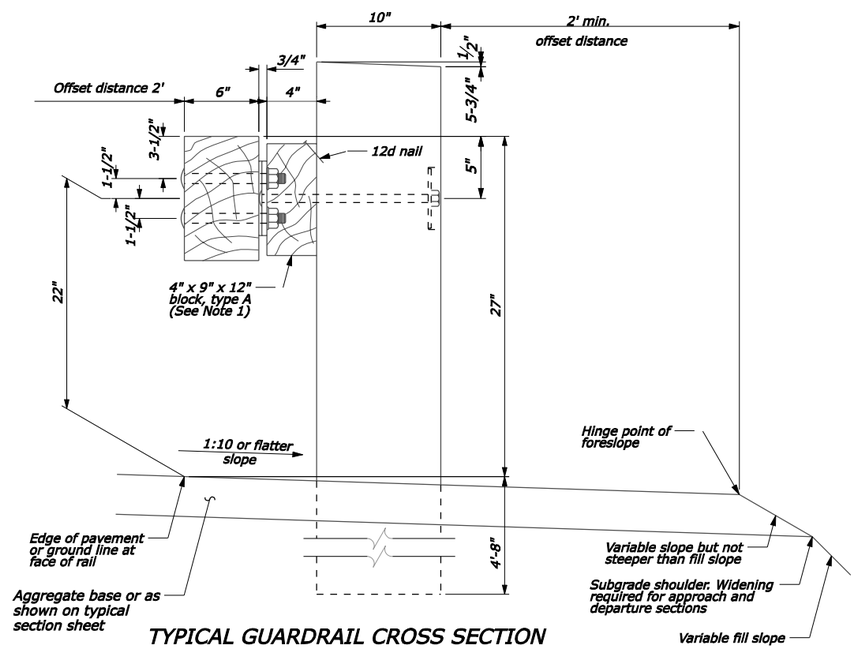


TYPICAL GUARDRAIL CROSS SECTION

NOTE:

1. Use the type A, blocked-out, system as specified.
2. Use weathering steel for all structural steel and fastener hardware as specified.

NO SCALE

STEEL-BACKED TIMBER GUARDRAIL TERMINAL SECTION

PRELIMINARY

7/2007 . Checked by: 7/2007 . Designed by: _DATE_ " + " _FILE_ F:\Washton\MORA\MORA1011\Design\mora123410PC.dgn

| STATE | PROJECT | SHEET NUMBER |
|---|---|---|
| WA | PRA-MORA 10(11) | I.2 |

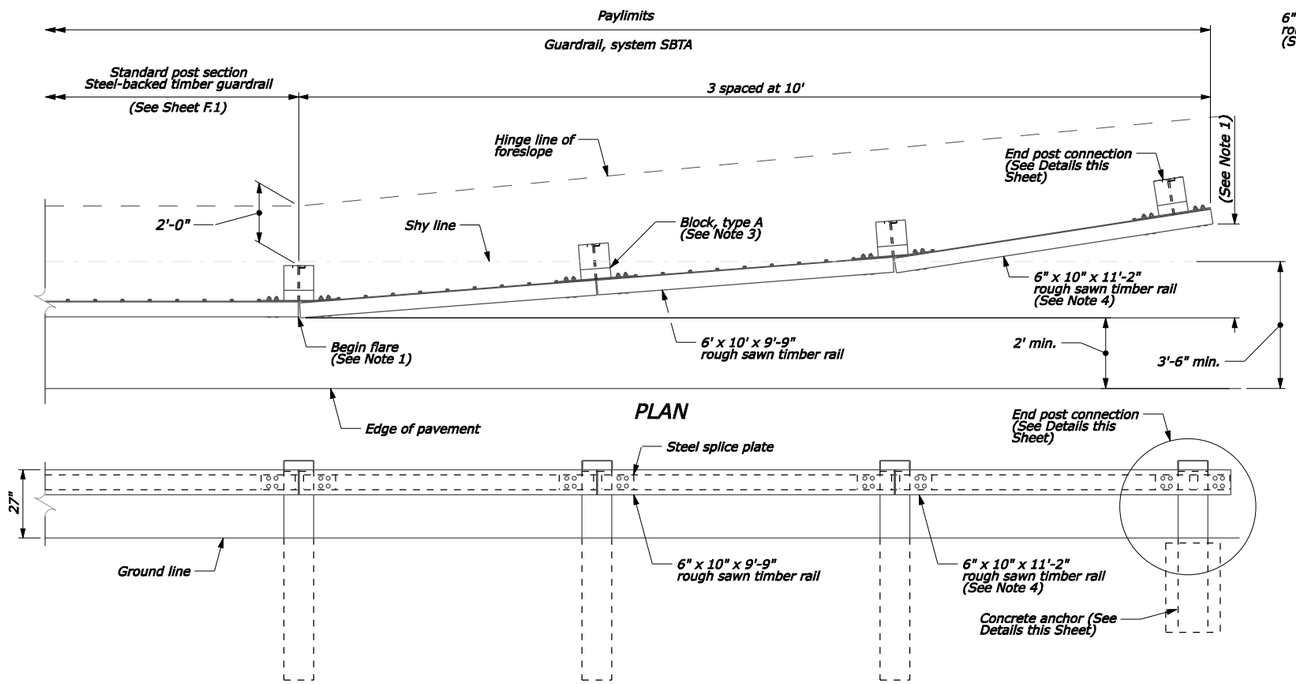


ELEVATION

APPROACH & DEPARTURE FLARE

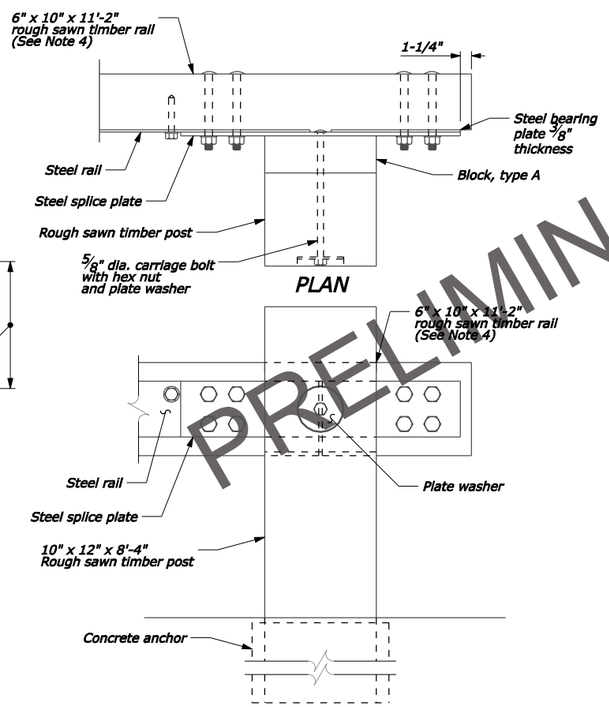


ELEVATION

END POST CONNECTION

PRELIMINARY

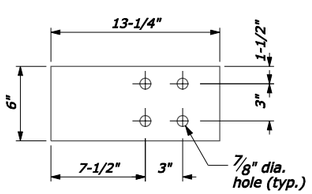


STEEL BEARING PLATE

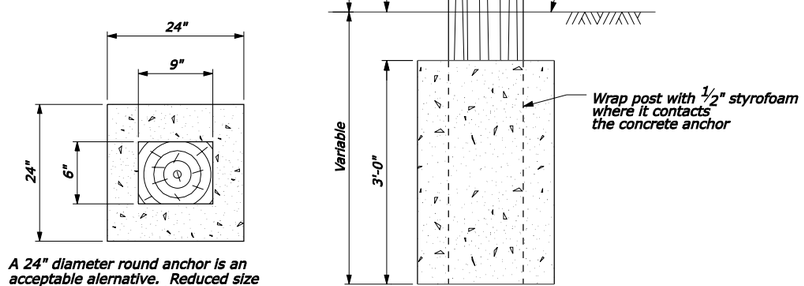


A 24" diameter round anchor is an acceptable alernative. Reduced size acceptable in solid rock.

CONCRETE ANCHOR

## NOTE:

1. As directed by the CO, flare the guardrail so that the approach and departure flares are outside the clear zone. If the approach and departure flares cannot be located outside the clear zone, they should be flared as far as practical from the road.
2. See Sheet I.1 for timber, structural steel, and hardware details.
3. On the type A, blocked-out guardrail, include the blocks in the approach and departure flares.
4. Furnish a 6" x 10" x 11'-2" rough sawn timber rail on the last section of the rail only, as shown above.

NO SCALE

# STEEL-BACKED TIMBER GUARDRAIL, TYPE A DETAILS

F:\Washton\MORA\MORA10111\Design\mora123410PB.dgn _DATE_ " + " _FILE_ Designed by: 7/2007 Checked by: 7/2007