Defense Distribution Depot Jacksonville Florida

Pre-Proposal Site Conference

Mar 28, 2009

Worldwide Distribution Support to America's Warfighters

August 5, 2008

Geography

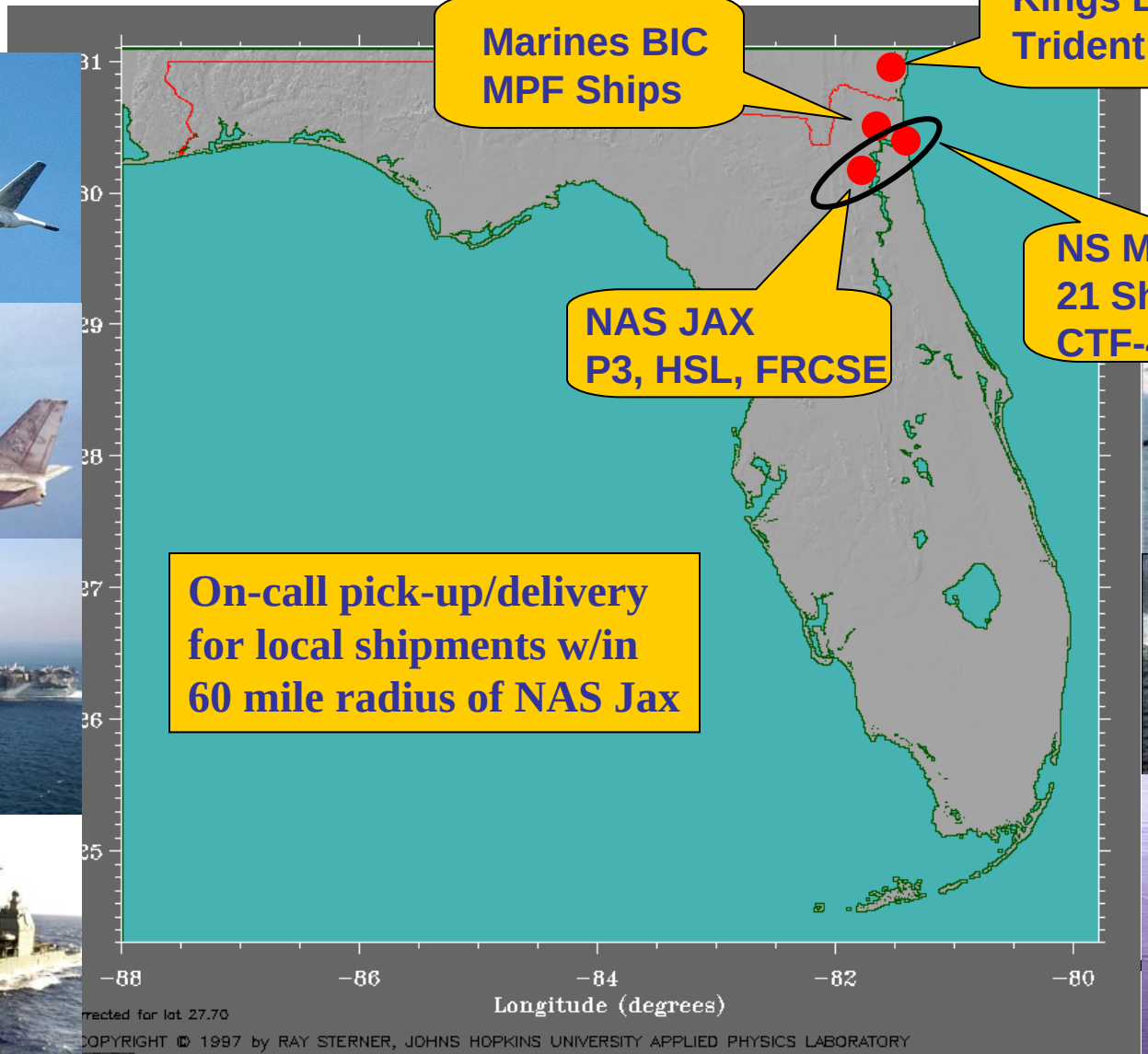
Marines BIC
MPF Ships
Kings Bay
Trident Subs
NS Mayport
21 Ships, SH60,
CTF-43
NAS JAX
P3, HSL, FRCSE
On-call pick-up/delivery
for local shipments w/in
60 mile radius of NAS Jax
31
30
29
28
27
26
25
−88
−86
−84
−82
−80
Longitude (degrees)
rected for lat 27.70
COPYRIGHT © 1997 by RAY STERNER, JOHNS HOPKINS UNIVERSITY APPLIED PHYSICS LABORATORY

DDJF Physical Infrastructure

DDJF NAS JAX:

North Area - 5 bldgs; 4 satellites

South Area – 11 bldgs; open yard

DDJF NS Mayport:

4 bldgs

Mayport

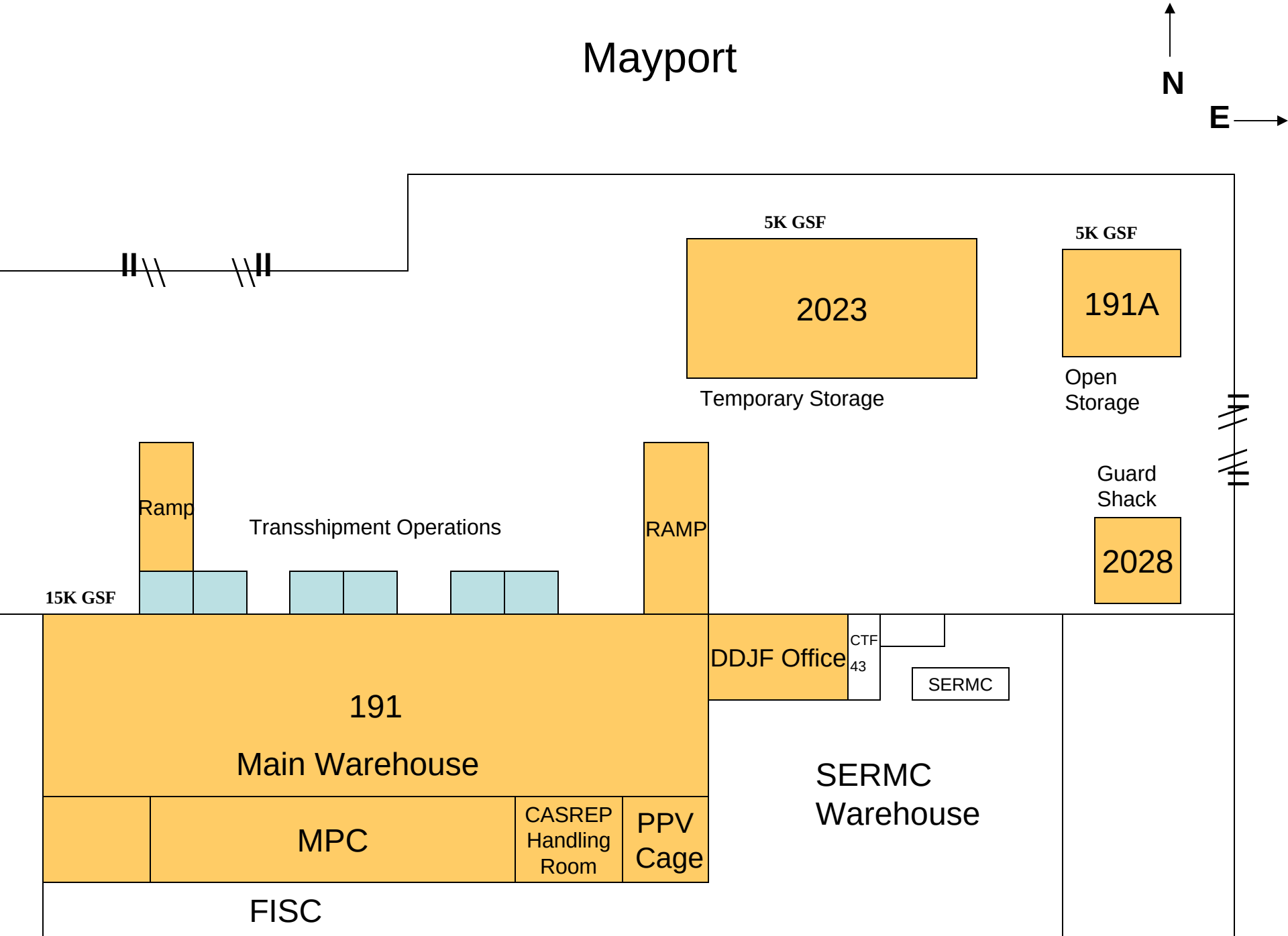
N
E
5K GSF
2023
Temporary Storage
5K GSF
191A
Open Storage
Guard Shack
2028
Ramp
Transshipment Operations
RAMP
15K GSF
191
Main Warehouse
DDJF Office
CTF 43
SERMC
SERMC Warehouse
MPC
CASREP Handling Room
PPV Cage
FISC

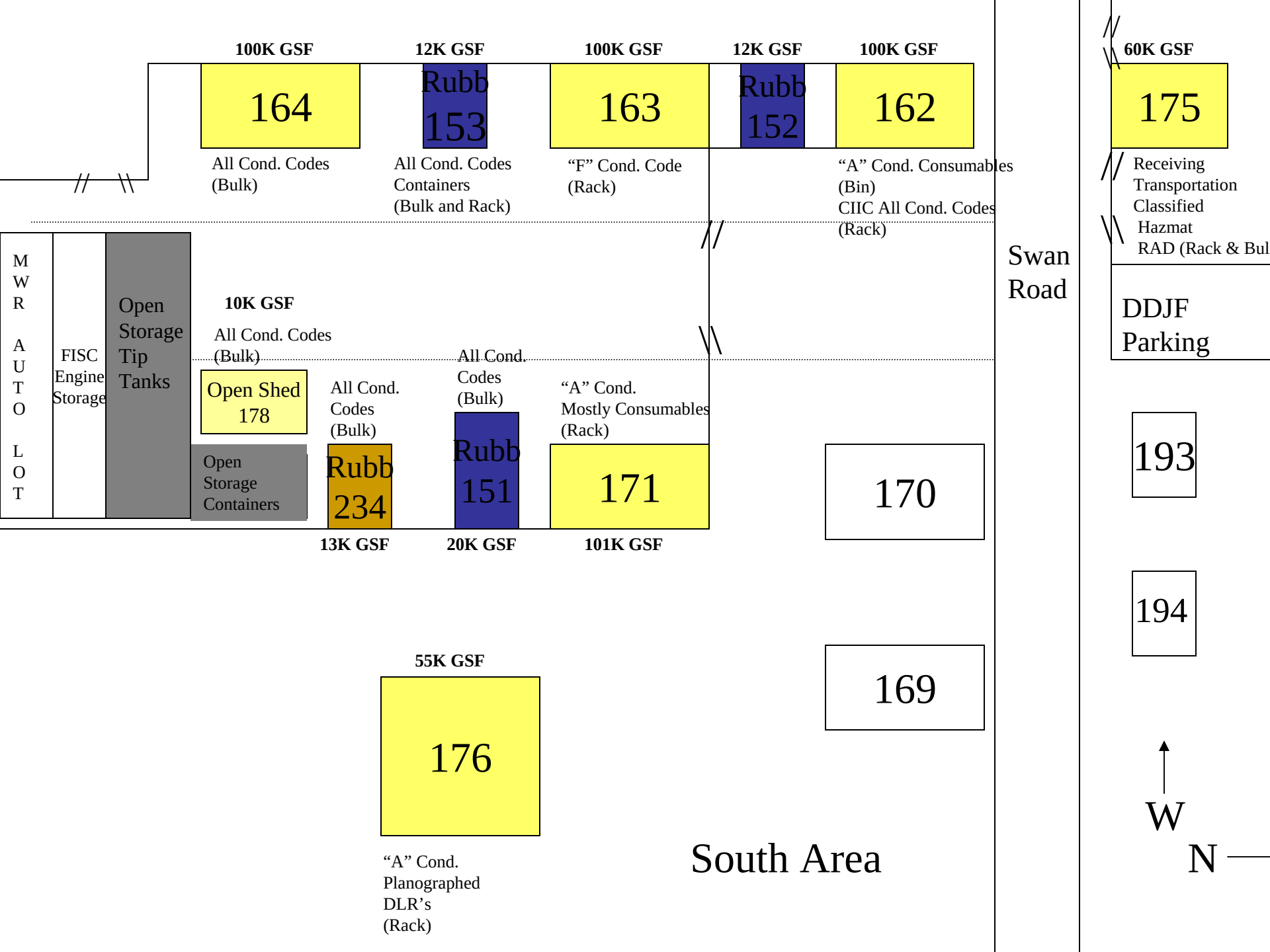
100K GSF
164
All Cond. Codes
(Bulk)
12K GSF
Rubb
153
All Cond. Codes
Containers
(Bulk and Rack)
100K GSF
163
"F" Cond. Code
(Rack)
12K GSF
Rubb
152
100K GSF
162
"A" Cond. Consumables
(Bin)
CIIC All Cond. Codes
(Rack)
60K GSF
175
Receiving
Transportation
Classified
Hazmat
RAD (Rack & Bul
Swan
Road
DDJF
Parking
MWR AUTO LOT
FISC
Engine
Storage
Open
Storage
Tip
Tanks
10K GSF
All Cond. Codes
(Bulk)
Open Shed
178
Open
Storage
Containers
All Cond.
Codes
(Bulk)
Rubb
234
13K GSF
All Cond.
Codes
(Bulk)
Rubb
151
20K GSF
"A" Cond.
Mostly Consumables
(Rack)
171
101K GSF
170
193
194
169
55K GSF
176
"A" Cond.
Planographed
DLR's
(Rack)
South Area
W
N

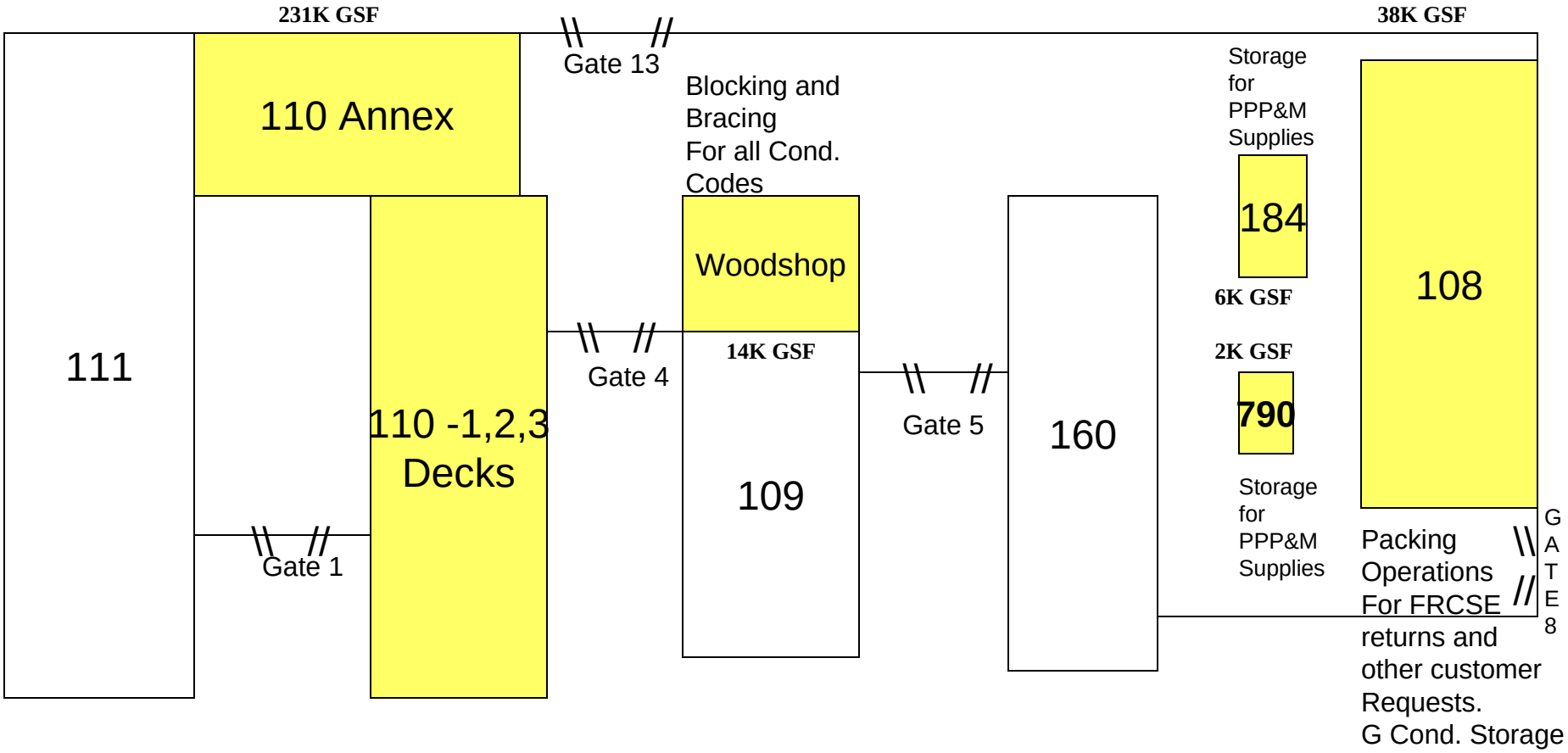

North Area

N

E

DDJF: NAS JAX ON-BASE SUPPORT

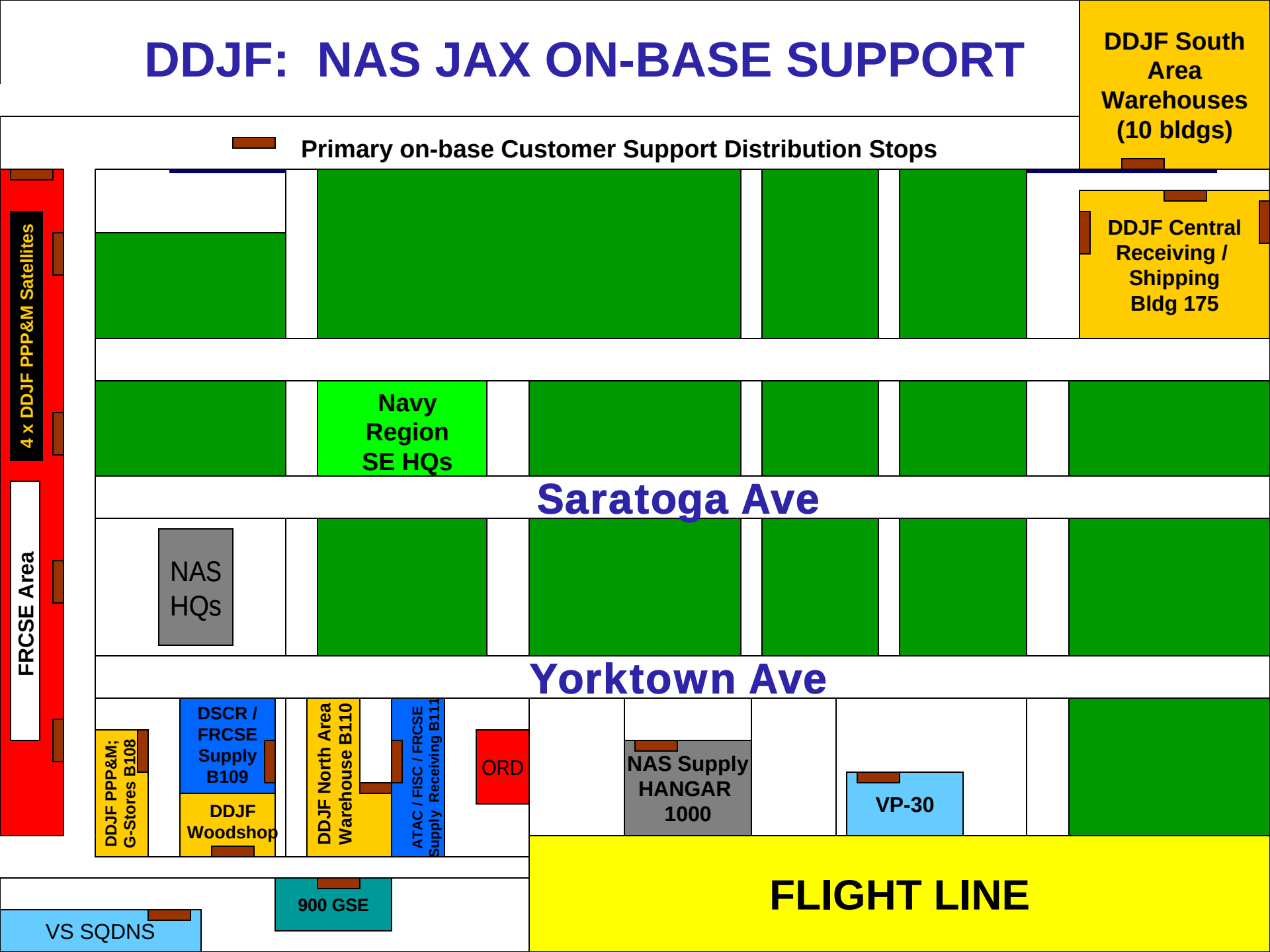

Business Synopsis

Industrial Customer Base

- FRCSE
- NAS Jax
- FISC Jax
- SAIC
- NAVSEA Voyage Repair Team
- NS Mayport
- SERMC

Customer Requisitions

- 200,000 Requisitions Filled FY08
  - 47% to Industrial Customers listed above

Materiel

- 70K Total NSNs ($4.4B)
  - 23K NAVICP ($4.0B)
  - 47K DLA ($.4B)

2008 Storage Capacity

- GSF: 838K
- Bin Loc: 98,119
- Rack Loc: 29,174
- Bulk Loc: 1,326

BRAC Project

- Reducing Footprint – 231K GSF
- 70K Locations Rewarehoused