NPS	REG	STATE	PROJECT	SHEET NO.	TOTAL SHEETS
821 / 41920	NC	DC	PRA-ROCR 3A5, 204(1)	1	139

U.S. DEPARTMENT OF THE INTERIOR
NATIONAL PARK SERVICE

ROCK CREEK PARK

PLANS FOR PROPOSED

PROJECT PRA-ROCR 3A5,204(1)
ROCK CREEK AND POTOMAC PARKWAY

REHABILITATION OF THE ROCK CREEK AND POTOMAC PARKWAY FROM VIRGINIA AVENUE TO THE 'P' STREET BRIDGE AND THE THOMPSON BOAT CENTER ACCESS ROAD AND PARKING AREA.

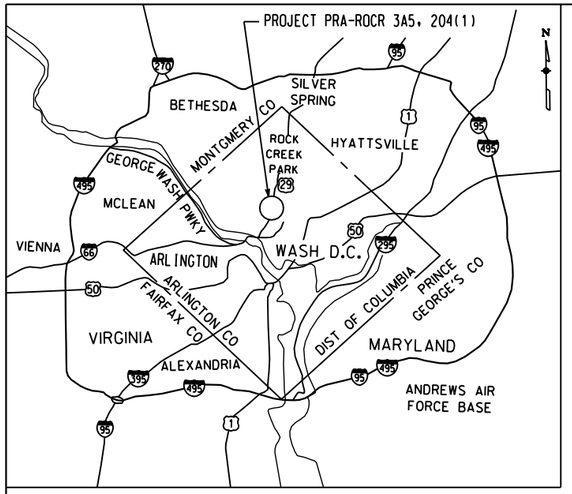

KEY MAP
WASHINGTON D. C. AND METROPOLITION AREA

0 5 20
SCALE IN MILES

INDEX OF SHEETS

SHEET NO.	DESCRIPTION
1	TITLE SHEET
2	SYMBOLS AND ABBREVIATIONS
3	LOCATION MAP AND SHEET LAYOUT
4-7	TYPICAL SECTIONS
8-13	TABULATION OF QUANTITIES
14-25	SCHEDULES AND SUMMARIES
26-34	HORIZONTAL ALIGNMENT PLANS
35-43	PLANS
44-47	BRIDGE PLANS AND DETAILS
48-53	ELEVATION PLANS AND PROFILES
54	STORM DRAIN PROFILES
55-67	TRAFFIC CONTROL PLANS
68-70	BIKE TRAIL DETOUR
71-74	SEDIMENT CONTROL PLANS
75-83	STRIPING AND SIGNING PLANS
84-92	STREET LIGHTING PLANS
93-94	SIGNAL PLANS - LOOP DETECTOR REPLACEMENT
95-139	STANDARDS AND DETAILS

DESCRIPTION OF PROJECT

PROJECT LENGTH:
ROCK CREEK & POTOMAC PARKWAY 0.77 MILES

IMPROVEMENTS:
REHABILITATION OF ROCK CREEK & POTOMAC PARKWAY FROM VIRGINIA AVE. TO 'P' ST. BRIDGE. NEW OVERLAY TO 'L' ST. BRIDGE. RECONSTRUCTION OF ACCESS RD. AND PARKING LOT AT THE THOMPSON'S BOAT CENTER. RECONSTRUCTION OF 'P' ST. RAMP.

ROADWAY:	WIDTH	SURFACE	TYPE
ROCK CREEK & POTOMAC PARKWAY	46' TO 50'	HACP	AGGR. BASE

DESIGN DESIGNATION
ADT(2003) ------- 52,255
ADT(2023) ------- 63,761
DHV ---------- 4,536
D ---------- 50/50
V (DESIGN) ------- 40 MPH
e_{max} ---------- 0.08
C/A ---------- FULL

SPECIFICATIONS:

"Standard Specifications for Construction of Roads and Bridges on Federal Highway Projects", FP-96

WASHINGTON, D.C.

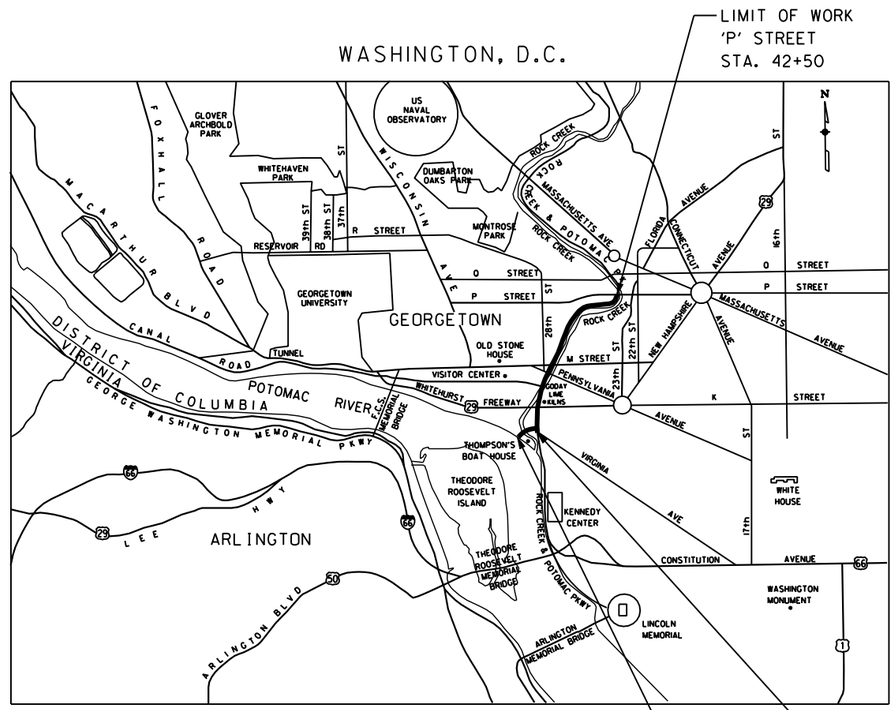

LOCATION MAP

0 1/4 1
SCALE IN MILES

PLANS PREPARED FOR

U.S. DEPARTMENT OF TRANSPORTATION
FEDERAL HIGHWAY ADMINISTRATION
EASTERN FEDERAL LANDS HIGHWAY DIVISION
STERLING, VIRGINIA

PLANS PREPARED BY

PHOENIX ENGINEERING, INC.
CONSULTING ENGINEERS
1420-A JOH AVENUE
BALTIMORE, MARYLAND 21227
(410) 247-8833 FAX 247-9397

NPS PACKAGE NO. ROCR-044964/044976

NPS	REG	STATE	PROJECT	SHEET NO.	TOTAL SHEETS
021 41920	NC	DC	FRA-RBCR 395, 2041(1)	2	139

Abandoned	aband.
Abutment	abut.
Aggregate	aggr.
Alternate	alt.
And	&
And so forth	etc.
Approximate	approx.
Asphalt	asph.
Avenue	Ave.
Average daily traffic	ADT
Batter	btr.
Bearing	brg.
Beginning	beg.
Bench mark	BM
Bollard	boll.
Bridge	br.
Cast iron pipe	cip
Cement	cem.
Centerline	℄
Center to center	cc or c. to c.
Clear	clr.
Column	col.
Communication	comm.
Concrete	conc.
Concrete curb & gutter	cc&g
Connection	conn.
Construction	constr.
Construction joint	constr. jt.
Contingent sum	CTSM
Continuous	cont.
Corrugated metal pipe	CMP
Creek	cr.
Cubic feet	C.F.
Cubic yard	C.Y.
Culvert	culv.
Curve delta	Δ
Degree	°, deg.
Degree of curve	D′
Design hourly volume	DHV
Diagonal	diag.
Diameter	dia. or D
District	dist.
District of Columbia	D.C.
Drain	dr.
Drawing(s)	drwg(s)
Each	ea.
East	E
East bound lane	EBL
Edge of pavement	EP
Edge of road	ER
Edge of water	EW
Electric	elec.
Elevation	elev.
Elevation with number	EL. 94.0
Embankment	emb.
Emergency	emerg.
Engineer(s)	engr(s)
Excavation	exc.
Existing	ex. or exist.
Expansion joint	exp. jt. or E.J.
Federal	Fed.
Feet	ft.
Finish	fin.
Fire hydrant	F.H.
Fire service	F.S.
Footing	ftg.
For example	e.g.
Gage (Gauge)	ga.
Galvanized	galv.
Gas	G
Grading	gr.
Granite	gran.
Handbox	HB
Headwall	hdwl.
Highway	hwy.
Hot asphalt concrete pavement	HACP
Hydrant	HYD
Identification	iden.
Inclusive	incl.
Inlet (Proposed)	I-5
Inside diameter	ID
Invert	inv.
Joint	jt.
Left	lt.
Length of curve	L
Light pole	L.P.
Linear feet	L.F.
Limit of disturbance	LOD
Longitudinal	long.
Low water	L.W.
Lump sum	L.S.

Magnetic	mag.
Maintenance	maint.
Manhole	M.H.
Material	matl.
Maximum	max.
Miles per hour	MPH
Mile post	M.P.
Minimum	min.
Minute(s)	′
Miscellaneous	misc.
Monument	mon.
Multiple tile duct	MTD
National park service	NPS
Nominal Max. Size Aggregate	N.M.S.A.
North	N
Northeast	NE
Northwest	NW
Not applicable	N/A
Not in Contract	N.I.C.
Number	no.
Outside diameter	OD
Parkway	pkwy
Pavement	pvmt.
Percent	pct. or %
Perforated	perf.
Plate	pl.
Point of compound curve	PCC
Point of curve	PC
Point on curve	POC
Point of curve to spiral	PCS or CS
Point of intersection	PI
Point of spiral to curve	PSC or SC
Point on spiral	POS
Point of spiral to tangent	PST or ST
Point on tangent	POT
Point of tangent to spiral	PS or TS
Point of tangent	PT
Profile Grade Line	P.G.L.
Project	proj.
Radius	R or rad.
Reconstruction	reconst.
Regulations	regs.
Reinforced	reinf.
Reinforced concrete pipe	RCP
Required	reqd.
Reservoir or Reservation	res.
Retaining wall	ret.wall
Right	rt.
Right-of-way	R/W
Road	rd.
Roadway	rdwy.
Route	rte.
Sanitary sewer	S.S. or san.
Slope protection	sl. prot.
South	S
Southeast	SE
Southwest	SW
Spacing, spaces or spaced	spa.
Specification(s)	spec.
Square	sq.
Square feet	S.F.
Square yard	S.Y.
Standard	std.
Station	sta.
Steel backed timber guardrail, type A	SBTA
Steel backed timber guardrail, type B	SBTB
Storm drain	S.D.
Street	St.
Street Light Cable	str. lgt. cbl.
Structural	struc.
Superelevation rate	e
Symmetrical	sym.
Tangent	tan.
Tangent length	T
Telephone	tel. or T.
Temporary	temp.
Temporary bench mark	TBM
That is	i.e.
Thousand	M
Traffic controller	traf. contr.
Traverse	trav.
Typical	typ.
United States	U.S.
Vehicles per hour	VPH
Vertical point of intersection	VPI
Water	W.
Water meter	WM
Water valve	WV
West	W
West bound lane	WBL

NATIONAL BOUNDARY		
STATE BOUNDARY		
COUNTY BOUNDARY		
CITY BOUNDARY		
TOWNSHIP or RANGE LINE		
SECTION LINE		
1/4 SECTION LINE		
1/16 SECTION LINE		
NATIONAL PARK or FOREST BOUNDARY		
PROPERTY LINE		P/L
RIGHT-OF-WAY LINE	EXISTING	R/W
	PROPOSED	R/W
RIGHT-OF-WAY LINE with MONUMENT	EXISTING	R/W
	PROPOSED	R/W
EASEMENT (Permanent - Construction)		P/E C/E
ROUTE NUMBERS		26 INTERSTATE; 25 U.S.; 694 STATE
SLOPE STAKE	TOP OF CUT	
	TOE OF FILL	
ROADWAY, EXISTING		
RAILROAD	SINGLE TRACK	
	MULTIPLE TRACK	
TRAIL		
INTERMITTENT DRAINAGE and SMALL CREEK		
LARGE CREEK		
RIVER		
LAKE, POND or RESERVOIR; MARSHLAND		
SPRING		
TREELINE; TREE		
MATERIAL SOURCE		FOUND / PROJECTED
SECTION CORNER		36 31 1 6 / 36 31 1 6
1/4 SECTION CORNER		15 22 / 15 22
1/16 SECTION		
PROPERTY CORNER		No Symbol / No Symbol
PARCEL NUMBER		No Symbol / 400
NORTH ARROW		N

	EXISTING	PROPOSED
LIMIT OF DISTURBANCE	No Symbol	LOD LOD
FENCE (SILT)	No Symbol	SF SF
FENCE		
GUARDRAIL		
MEDIAN BARRIER		
SIGNS		
ABANDONED UNDERGROUND UTILITIES	W	No Symbol
G=gas, DR=drainage, SA=sanitary sewer, T=telephone, W=water		
WATER	W	No Symbol
DRAIN	DRAIN	No Symbol
SANITARY SEWER	SAN	No Symbol
TELEPHONE	TEL.	No Symbol
STREET LIGHTS	DUCT/STR LGT CBL	DUCT/STR LGT CBL
STEAM TUNNEL	STEAM TUNNEL	No Symbol
INLET		
SS/SD MANHOLE	M.H.	
BRIDGE		
PIPE CULVERT		
PIPE CULVERT with HEADWALL		
UNDERDRAIN	UD	UD
TRAVERSE POINT	TRAV NO.	No Symbol
BRASS CAP		No Symbol
STEEL PIN		No Symbol
HUB & TACK		No Symbol
PLUS, OFFSET AND SPOT ELEVATION	× 99.9	STA 99+99.9 99.9′ LT EL. 99.9′
COORDINATE GRID TICK	E99.99 N 99.99	No Symbol
BUILDING		
BORING LOCATION		No Symbol

NOTE:

Other symbols used in the plans will be shown in a legend on the appropriate plan sheet.

U.S. DEPARTMENT OF TRANSPORTATION
FEDERAL HIGHWAY ADMINISTRATION
EASTERN FEDERAL LANDS HIGHWAY DIVISION
STERLING, VIRGINIA

SYMBOLS & ABBREVIATIONS

NPS	REG	STATE	PROJECT	SHEET NO.	TOTAL SHEETS
021 41500	NC	DC	PRA-ROCR 345.304(1)	3	139

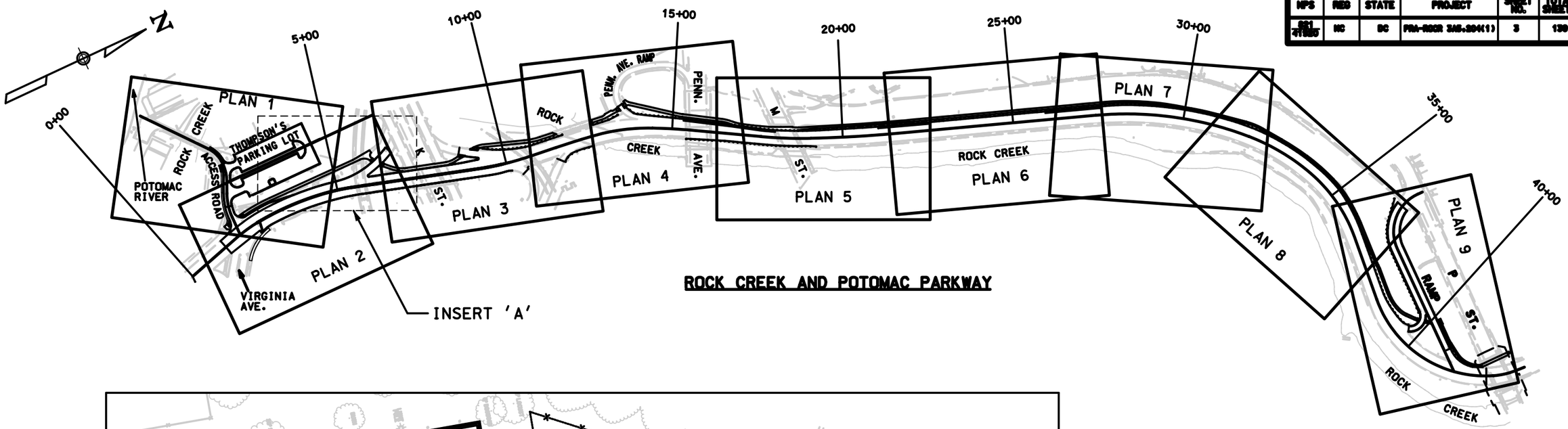

ROCK CREEK AND POTOMAC PARKWAY

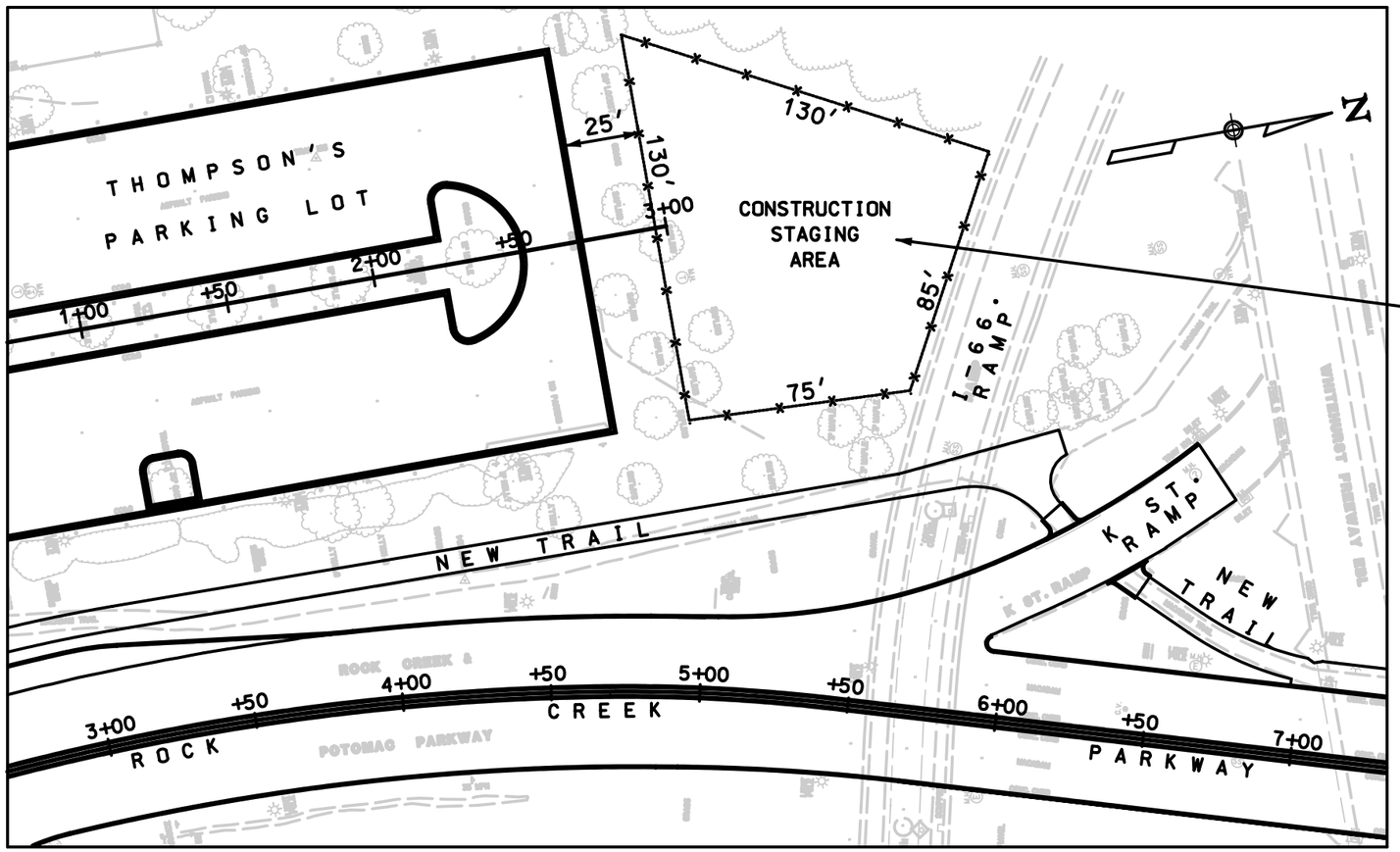

INSERT 'A'
CONSTRUCTION STAGING AREA LOCATION

NOTE

THE EXACT SIZE AND LOCATION OF THE CONSTRUCTION STAGING AREA IS TO BE COORDINATED WITH THE CO AND NPS. UPON COMPLETION OF THE PROJECT, THIS AREA IS TO BE CLEANED AND DRESSED WITH 2" TOP-SOIL AND TURF ESTABLISHMENT.

NO SCALE

U.S. DEPARTMENT OF TRANSPORTATION
FEDERAL HIGHWAY ADMINISTRATION
EASTERN FEDERAL LANDS HIGHWAY DIVISION
STERLING, VIRGINIA

LOCATION MAP AND SHEET LAYOUT

...\lm01rock.dgn 8/11/2006 3:42:43 PM

NPS	REG	STATE	PROJECT	SHEET NO.	TOTAL SHEETS
621 41920	NC	DC	FRA-ROCR 345.204(1)	4	139

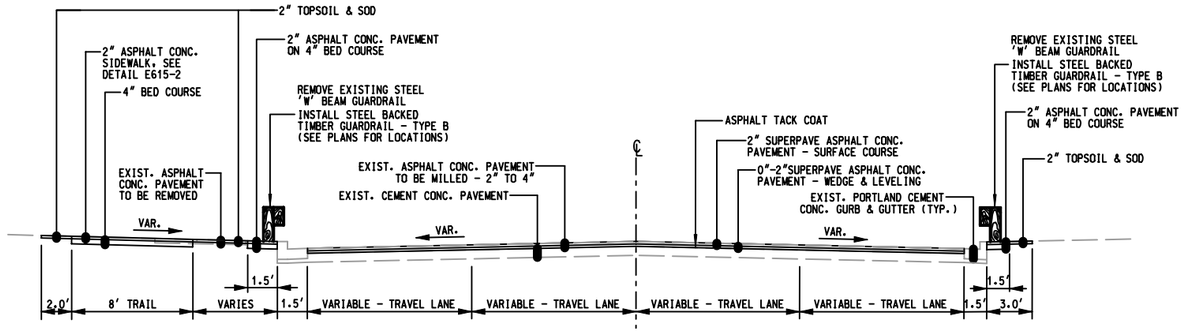

ROCK CREEK & POTOMAC PARKWAY
FROM STA. 10+25 TO STA. 18+75

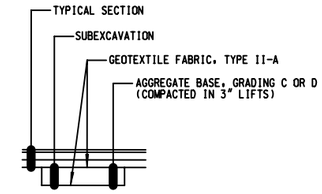

UNDERCUT DETAIL

ROCK CREEK AND POTOMAC PARKWAY
THOMPSON'S BOAT CENTER ACCESS ROAD
THOMPSON'S BOAT CENTER PARKING LOT
'P' STREET RAMP

NOTE: TO BE USED ONLY UPON THE APPROVAL OF THE CO IN AREAS WHERE UNSUITABLE SUB-BASE IS ENCOUNTERED. THE LIMITS AND DEPTH OF UNDERCUT SHALL BE DETERMINED AND APPROVED BY THE CO.

NOTES:

1. FOLLOW HORIZONTAL ALIGNMENT SHEETS FOR PLACEMENT OF PORTLAND CEMENT CONCRETE CURB AND GUTTER.
2. PLACE TOPSOIL AND SOD FOR ALL DISTURBED AREAS IN ACCORDANCE WITH SECTIONS 624 AND 627.
3. SUPERPAVE ASPHALT CONCRETE PAVEMENT, 3/8 INCH NOMINAL MAXIMUM SIZE AGGREGATE, 0.3- <3 ESAL, TYPE 3 PAVEMENT SMOOTHNESS (PG70-22).
4. SUPERPAVE ASPHALT CONCRETE PAVEMENT, 3/4 INCH NOMINAL MAXIMUM SIZE AGGREGATE, 0.3- <3 ESAL (PG70-22).
5. SUPERPAVE ASPHALT CONCRETE PAVEMENT, 3/4 INCH NOMINAL MAXIMUM SIZE AGGREGATE, 0.3- <3 ESAL, WEDGE AND LEVELING (PG70-22).
6. REFER TO DETAIL E609-A FOR PORTLAND CEMENT CONCRETE CURB AND GUTTER.
7. REFER TO DETAILS 501-3 AND 501-4 FOR CONCRETE PAVEMENT PATCHING AND CONCRETE PAVEMENT REMOVAL METHODS FOR ROCK CREEK AND POTOMAC PARKWAY. LOCATIONS AND SIZES OF CONCRETE PAVEMENT PATCHING WILL BE DETERMINED IN THE FIELD AFTER THE ROADWAY HAS BEEN MILLED AND THE EXISTING CONCRETE BASE HAS BEEN EXPOSED AND INSPECTED.
8. EXCAVATE EXISTING GROUND TO A DEPTH NECESSARY TO OBTAIN THE PROPOSED PAVEMENT STRUCTURE SHOWN.
9. STEEL BACKED TIMBER GUARDRAIL - THE FRONT FACE OF THE TIMBER RAIL SHALL BE INSTALLED IN LINE WITH THE FACE OF CURB, EXCEPT AT SOME END TREATMENTS. SEE STANDARD 617-60 FOR DETAIL. SEE THE GEOMETRY AND LOCATION PLANS FOR PLUSSES AND OFFSETS OF THE END TREATMENTS.

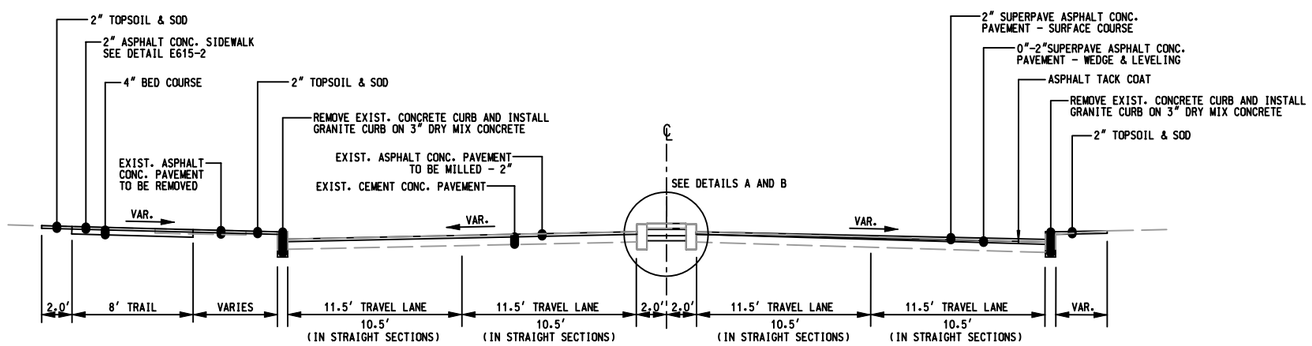

ROCK CREEK & POTOMAC PARKWAY
FROM STA 3+85.7 TO STA. 10+00

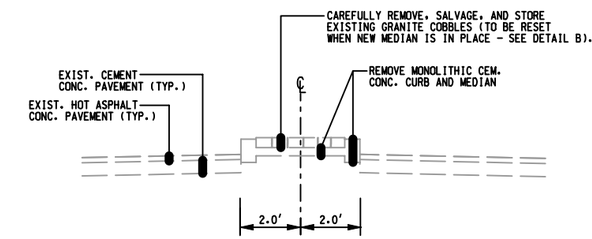

DETAIL 'A'
EXISTING
MEDIAN REMOVAL

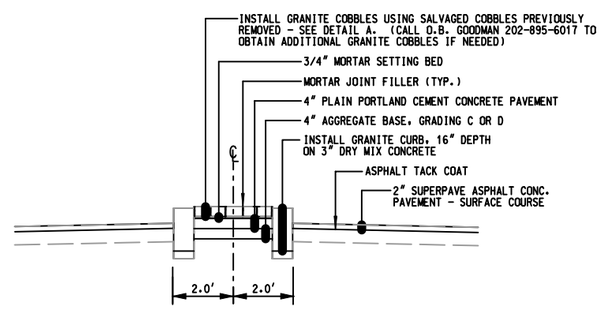

DETAIL 'B'
PROPOSED
MEDIAN REPLACEMENT

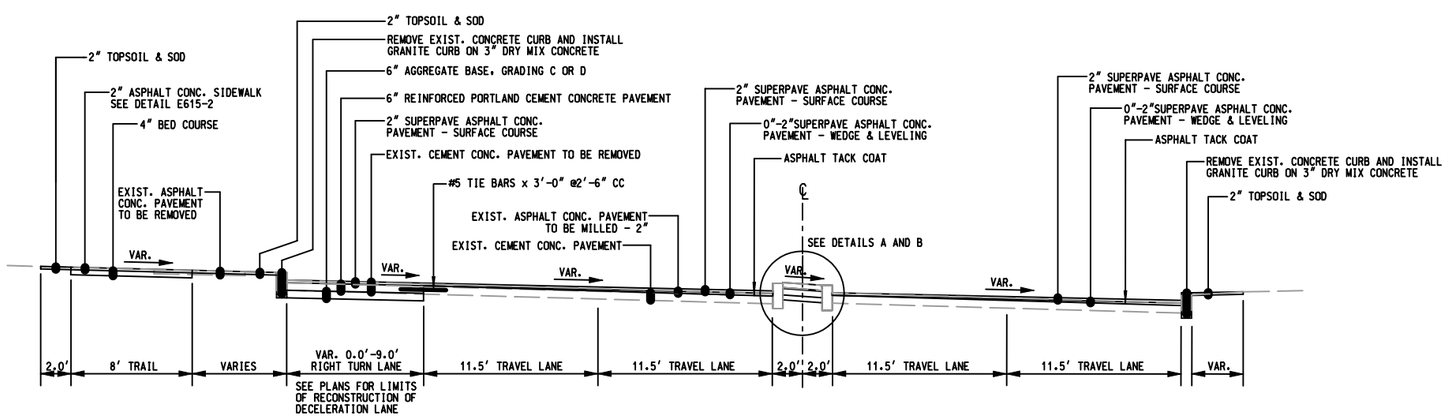

ROCK CREEK & POTOMAC PARKWAY
FROM VIRGINIA AVE. TO STA. 3+85.7

U.S. DEPARTMENT OF TRANSPORTATION
FEDERAL HIGHWAY ADMINISTRATION
EASTERN FEDERAL LANDS HIGHWAY DIVISION
STERLING, VIRGINIA

ROCK CREEK AND POTOMAC PARKWAY

TYPICAL SECTIONS
ROCK CREEK AND POTOMAC PARKWAY

NPS	REG	STATE	PROJECT	SHEET NO.	TOTAL SHEETS
621 41020	NC	DC	PRA-ROCR 345.204(1)	5	139

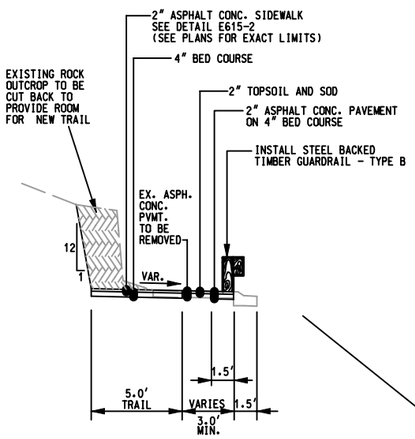

ROCK OUTCROP TO BE CUT BACK
STA. 33+00± TO STA. 33+20±
STA. 33+90± TO STA. 34+20±

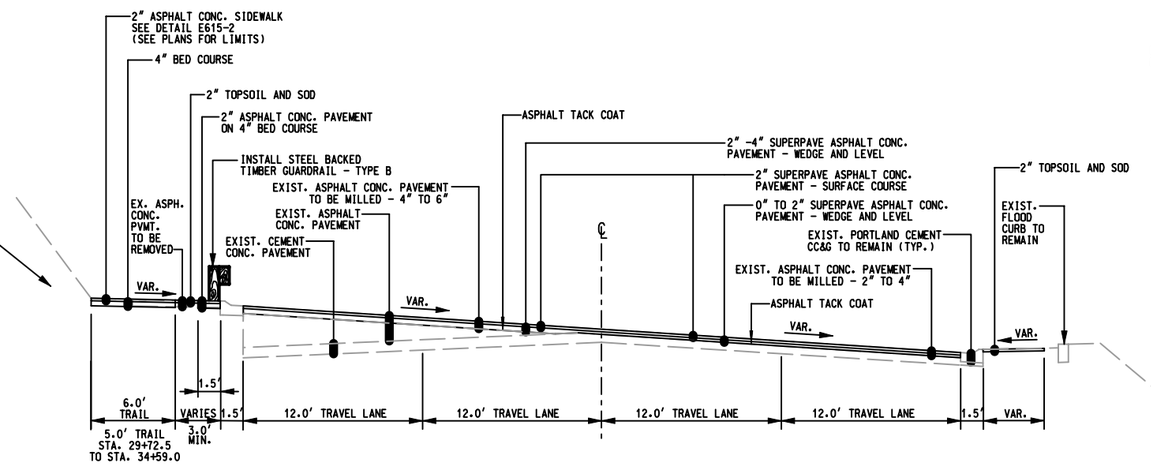

ROCK CREEK & POTOMAC PARKWAY
SUPERELEVATED (CURVE SECTIONS ONLY)
FROM STA. 18+75 TO STA. 42+50 (P ST. BRIDGE)

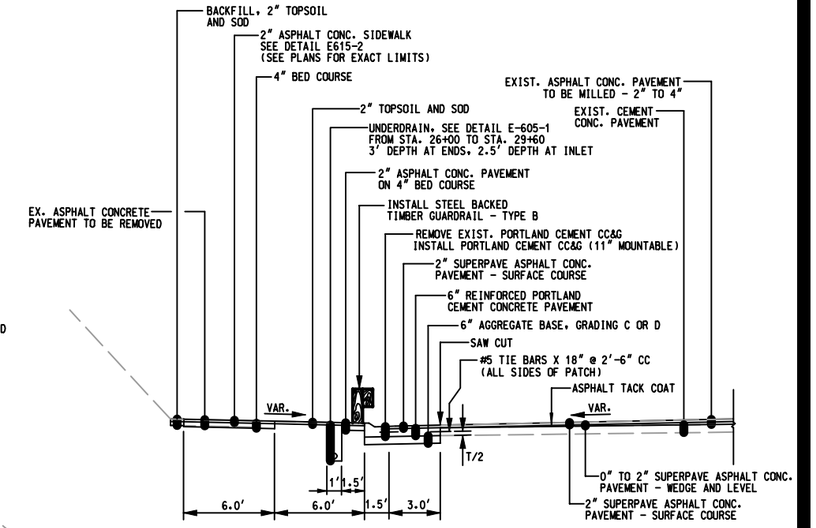

ROCK CREEK & POTOMAC PARKWAY
REPAIR DETAIL AT INLET AND PIPE
INSTALLATIONS

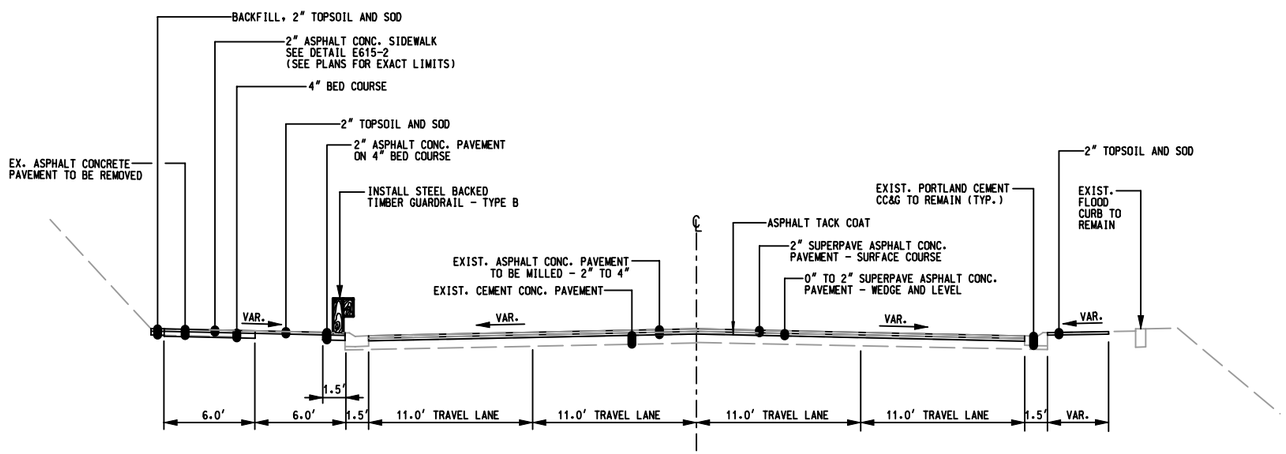

ROCK CREEK & POTOMAC PARKWAY
CROWNED (STRAIGHT SECTIONS ONLY)
FROM STA. 18+75 TO STA. 42+50 (P ST. BRIDGE)

NOTES:

1. FOLLOW HORIZONTAL ALIGNMENT SHEETS FOR PLACEMENT OF PORTLAND CEMENT CONCRETE CURB AND GUTTER.
2. PLACE TOPSOIL AND SOD FOR ALL DISTURBED AREAS IN ACCORDANCE WITH SECTIONS 624 AND 627.
3. SUPERPAVE ASPHALT CONCRETE PAVEMENT, 3/8 INCH NOMINAL MAXIMUM SIZE AGGREGATE, 0.3- <3 ESAL, TYPE 3 PAVEMENT SMOOTHNESS (PG70-22).
4. SUPERPAVE ASPHALT CONCRETE PAVEMENT, 3/4 INCH NOMINAL MAXIMUM SIZE AGGREGATE, 0.3- <3 ESAL (PG70-22).
5. SUPERPAVE ASPHALT CONCRETE PAVEMENT, 3/4 INCH NOMINAL MAXIMUM SIZE AGGREGATE, 0.3- <3 ESAL, WEDGE AND LEVELING (PG70-22).
6. REFER TO DETAILS 501-3 AND 501-4 FOR CONCRETE PAVEMENT PATCHING AND CONCRETE PAVEMENT REMOVAL METHODS FOR ROCK CREEK AND POTOMAC PARKWAY. LOCATIONS AND SIZES OF CONCRETE PAVEMENT PATCHING WILL BE DETERMINED IN THE FIELD AFTER THE ROADWAY HAS BEEN MILLED AND THE EXISTING CONCRETE BASE HAS BEEN EXPOSED AND INSPECTED.
7. EXCAVATE EXISTING GROUND TO A DEPTH NECESSARY TO OBTAIN THE PROPOSED PAVEMENT STRUCTURE SHOWN.
8. STEEL BACKED TIMBER GUARDRAIL - THE FRONT FACE OF THE TIMBER RAIL SHALL BE INSTALLED IN LINE WITH THE FACE OF CURB, EXCEPT AT SOME END TREATMENTS. SEE STANDARD 617-60 FOR DETAIL. SEE THE GEOMETRY AND LOCATION PLANS FOR PLUSSES AND OFFSETS OF THE END TREATMENTS.

U.S. DEPARTMENT OF TRANSPORTATION
FEDERAL HIGHWAY ADMINISTRATION
EASTERN FEDERAL LANDS HIGHWAY DIVISION
STERLING, VIRGINIA

ROCK CREEK AND POTOMAC PARKWAY

TYPICAL SECTIONS
ROCK CREEK AND POTOMAC PARKWAY

NPS	REG	STATE	PROJECT	SHEET NO.	TOTAL SHEETS
621 41920	NC	DC	PRA-ROCR 346.204(1)	6	139

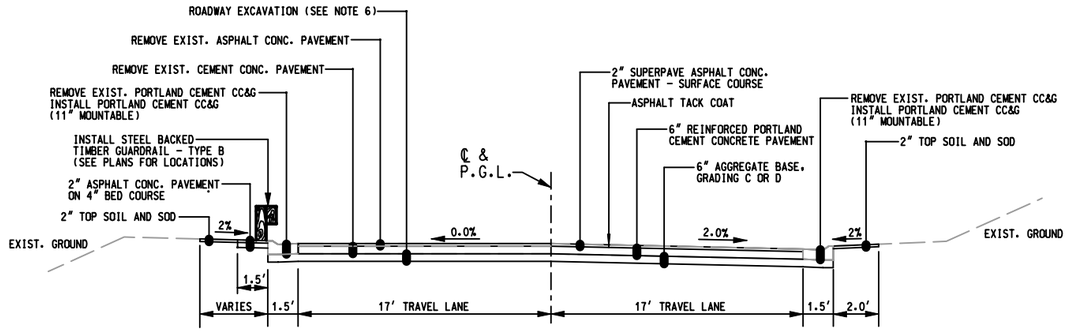

ROCK CREEK & POTOMAC PARKWAY
P STREET RAMP

AT STA. 4+50.0 AND 5+00.0

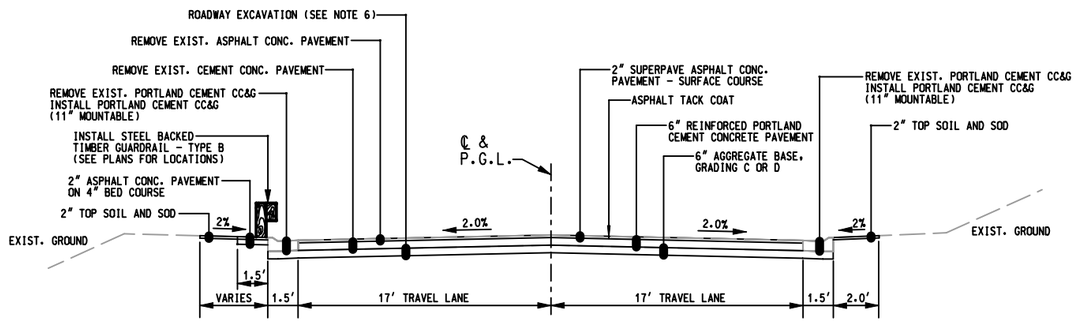

ROCK CREEK & POTOMAC PARKWAY
P STREET RAMP

FROM STA. 2+00.0 TO STA. 4+25.0

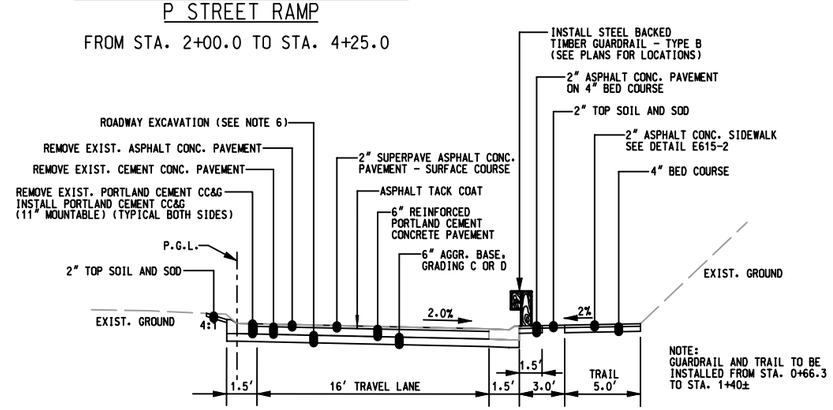

ROCK CREEK & POTOMAC PARKWAY
P STREET RAMP

FROM STA. 0+66.3 TO STA. 1+82.5

NOTES:

1. FOLLOW HORIZONTAL ALIGNMENT SHEETS FOR PLACEMENT OF PORTLAND CEMENT CONCRETE CURB AND GUTTER.
2. PLACE TOPSOIL AND SOD FOR ALL DISTURBED AREAS IN ACCORDANCE WITH SECTIONS 624 AND 627.
3. SUPERPAVE ASPHALT CONCRETE PAVEMENT, 3/8 INCH NOMINAL MAXIMUM SIZE AGGREGATE, 0.3- <3 ESAL, TYPE 3 PAVEMENT SMOOTHNESS (PG70-22).
4. REFER TO DETAIL E609-A FOR PORTLAND CEMENT CONCRETE CURB AND GUTTER.
5. EXCAVATE EXISTING GROUND TO A DEPTH NECESSARY TO OBTAIN THE PROPOSED PAVEMENT STRUCTURE SHOWN.
6. STEEL BACKED TIMBER GUARDRAIL - THE FRONT FACE OF THE TIMBER RAIL SHALL BE INSTALLED IN LINE WITH THE FACE OF CURB, EXCEPT AT SOME END TREATMENTS. SEE STANDARD 617-60 FOR DETAIL. SEE THE GEOMETRY AND LOCATION PLANS FOR PLUSSES AND OFFSETS OF THE END TREATMENTS.

U.S. DEPARTMENT OF TRANSPORTATION
FEDERAL HIGHWAY ADMINISTRATION
EASTERN FEDERAL LANDS HIGHWAY DIVISION
STERLING, VIRGINIA

ROCK CREEK AND POTOMAC PARKWAY

TYPICAL SECTIONS
'P' STREET RAMP

NPS	REG	STATE	PROJECT	SHEET NO.	TOTAL SHEETS
621 21920	NC	DC	FRA-ROCR 345.204(1)	7	139

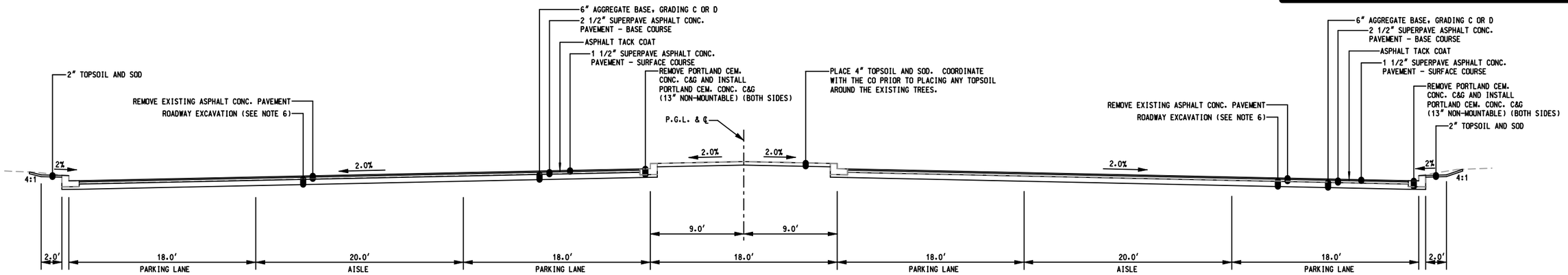

THOMPSON'S BOAT CENTER
PARKING LOT

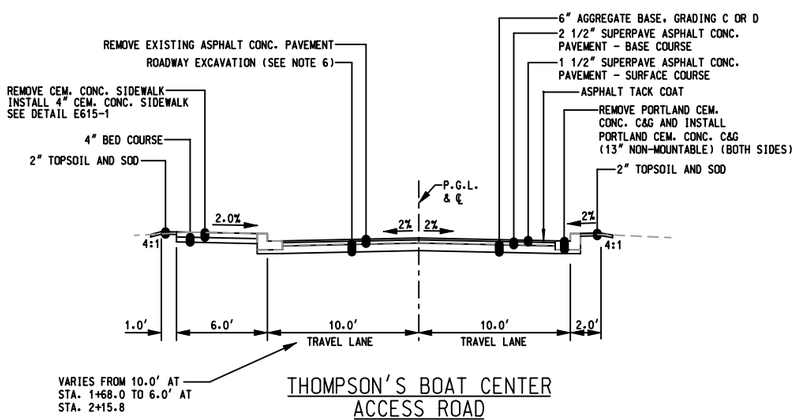

THOMPSON'S BOAT CENTER
ACCESS ROAD
FROM STA. 0+89 TO STA. 2+15.8

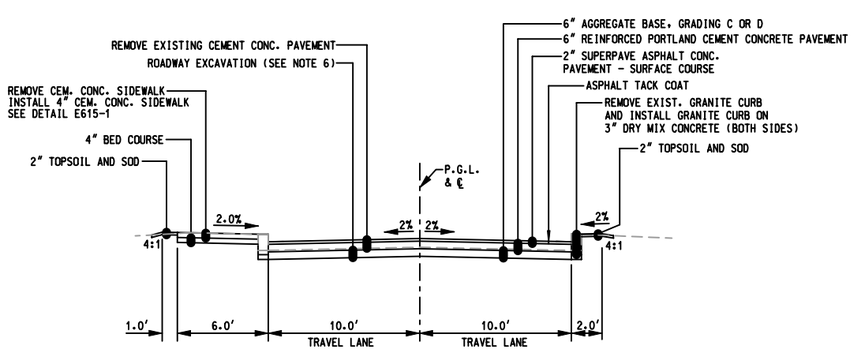

THOMPSON'S BOAT CENTER
ACCESS ROAD
FROM ROCK CREEK
PARKWAY TO STA. 0+89

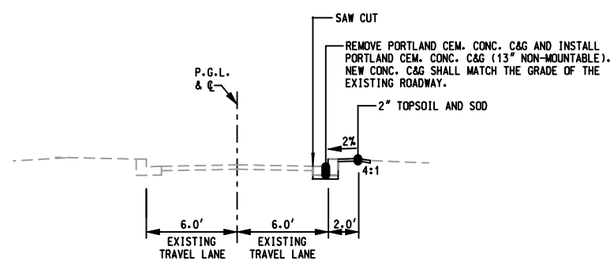

THOMPSON'S BOAT CENTER
ACCESS ROAD
FROM STA. 2+15.8 TO STA. 2+76.1

NOTES:

1. FOLLOW HORIZONTAL ALIGNMENT SHEETS FOR PLACEMENT OF PORTLAND CEMENT CONCRETE CURB AND GUTTER.
2. PLACE TOPSOIL AND SOD FOR ALL DISTURBED AREAS IN ACCORDANCE WITH SECTIONS 624 AND 627. AFTER THE COMPLETION OF ALL WORK FOR THIS CONTRACT, PLACE TOPSOIL AND ESTABLISH TURF FOR THE FORMER STAGING AREA IN ACCORDANCE WITH SECTIONS 624 AND 625.
3. SUPERPAVE ASPHALT CONCRETE PAVEMENT, 3/8 INCH NOMINAL MAXIMUM SIZE AGGREGATE, 0.3- <3 ESAL, TYPE 3 PAVEMENT SMOOTHNESS (PG70-22).
4. SUPERPAVE ASPHALT CONCRETE PAVEMENT, 3/4 INCH NOMINAL MAXIMUM SIZE AGGREGATE, 0.3- <3 ESAL (PG70-22).
5. REFER TO DETAIL E609-A FOR PORTLAND CEMENT CONCRETE CURB AND GUTTER.
6. EXCAVATE EXISTING GROUND TO A DEPTH NECESSARY TO OBTAIN THE PROPOSED PAVEMENT STRUCTURE SHOWN.

U.S. DEPARTMENT OF TRANSPORTATION
FEDERAL HIGHWAY ADMINISTRATION
EASTERN FEDERAL LANDS HIGHWAY DIVISION
STERLING, VIRGINIA

ROCK CREEK AND POTOMAC PARKWAY

TYPICAL SECTIONS
THOMPSON'S BOAT CENTER
ACCESS ROAD & PARKING LOT

NPS	REG	STATE	PROJECT	SHEET NO.	TOTAL SHEETS
821 41920	NC	DC	PRA-RDCR 3A5, 204(1)	8	139

ITEM	DESCRIPTION	UNIT	SITE 1	SITE 2	SITE 3	SITE 4	SITE 5	SITE 6	SITE 7	SITE 8	SITE 9					ESTIMATED QUANTITIES PLAN	ESTIMATED QUANTITIES BID SCHEDULE
	PLAN SHEET SECTION -------->>																
15101	MOBILIZATION	LPSM														ALL	ALL
15201	CONSTRUCTION SURVEY AND STAKING	LPSM														ALL	ALL
15401	CONTRACTOR TESTING	LPSM														ALL	ALL
15501	CONSTRUCTION SCHEDULE	LPSM														ALL	ALL
15703	SILT FENCE	LNFT	800	500	0	0	300	500	500	550	850					4000	4,000
15716D	INLET PROTECTION, TYPE D	EACH	5	3	10	2	7	2	4	0	6					39	39
15718	STABILIZED CONSTRUCTION ENTRANCE	EACH	3	0	0	0	0	0	0	0	2					5	5
20103	CLEARING AND GRUBBING	SQYD	0	0	0	0	0	0	89	156	0					245	245
20301AD	REMOVAL OF LIGHT POLE (STREET LIGHT POLES AND LUMINAIRES)	EACH	8	4	3	4	5	5	4	4	9					46	46
20301AT	REMOVAL OF RAISED PAVEMENT MARKER	EACH	0	0	6	26	26	26	26	26	26					162	162
20301AZ	REMOVAL OF STRUCTURES AND OBSTRUCTIONS (UNDERPASS LUMINAIRE)	EACH	0	0	10	0	0	0	0	0	0					10	10
20301AZ	REMOVAL OF STRUCTURES AND OBSTRUCTIONS (CONCRETE LIGHT FOUNDATION)	EACH	8	4	3	4	5	5	4	4	9					46	46
20301F	REMOVAL OF INLETS	EACH	2	0	0	0	2	0	0	0	0					4	4
20302AG	REMOVAL OF DETECTOR WIRE (LEAD-IN CABLE)	LNFT	0	39	0	0	0	0	0	0	0					39	39
20302RB	REMOVAL OF PORTLAND CEMENT CONCRETE CURB	LNFT	0	945	672	0	0	0	0	0	0					1617	1,617
20302RD	REMOVAL OF STONE CURB	LNFT	0	130	0	0	0	0	0	0	0					130	130
20302SB	REMOVAL OF PORTLAND CEMENT CONCRETE CURB AND GUTTER	LNFT	1534	21	40	143	183	147	107	0	1053					3228	3,228
20302W	REMOVAL OF GUARDRAIL	LNFT	0	0	108	243	407	0	0	0	0					758	758
20303AD	REMOVAL OF GRANITE COBBLES	SQYD	0	136	120	0	0	0	0	0	0					256	256
20303AEB	REMOVAL OF PORTLAND CEMENT CONCRETE MEDIAN	SQYD	0	181	160	0	0	0	0	0	0					341	341
20303PA	REMOVAL OF ASPHALT PAVEMENT	SQYD	3003	20	0	40	66	54	36	0	1603					4822	4,822
20303PB	REMOVAL OF PORTLAND CEMENT CONCRETE PAVEMENT (BASE REPAIR)	SQYD	0	50	50	50	50	50	50	0	0					300	300
20303PBN	REMOVAL OF PORTLAND CEMENT CONCRETE PAVEMENT, 6-INCH DEPTH	SQYD	0	323	0	40	66	54	36	0	1603					2122	2,122
20303PE	REMOVAL OF BRICK PAVEMENT (UNDERPASS BLOCK PAVEMENT)	SQYD	0	0	0	66	0	0	0	0	52					118	118

SITE 1 - THOMPSON BOAT CENTER ACCESS ROAD AND PARKING LOT
SITE 2 - ROCK CREEK PKWY. FROM STA. 1+29.7 TO STA. 6+50
SITE 3 - ROCK CREEK PKWY. FROM STA. 6+50 TO STA. 11+00
SITE 4 - ROCK CREEK PKWY. FROM STA. 11+00 TO STA. 16+50
SITE 5 - ROCK CREEK PKWY. FROM STA. 16+50 TO STA. 21+50
SITE 6 - ROCK CREEK PKWY. FROM STA. 21+50 TO STA. 26+50
SITE 7 - ROCK CREEK PKWY. FROM STA. 26+50 TO STA. 31+50
SITE 8 - ROCK CREEK PKWY. FROM STA. 31+50 TO STA. 37+00
SITE 9 - ROCK CREEK PKWY. FROM STA. 37+00 TO STA. 42+50
AND THE 'P' STREET RAMP

U.S. DEPARTMENT OF TRANSPORTATION
FEDERAL HIGHWAY ADMINISTRATION
EASTERN FEDERAL LANDS HIGHWAY DIVISION
STERLING, VIRGINIA

ROCK CREEK AND POTOMAC PARKWAY

SUMMARY OF QUANTITIES

9/7/2006 2:22:01 PM M:\Projects\rcr\3a5_204\proj_dev\Cadd\REVISED_sq01cml.dgn

ITEM	DESCRIPTION	UNIT	SITE 1	SITE 2	SITE 3	SITE 4	SITE 5	SITE 6	SITE 7	SITE 8	SITE 9					ESTIMATED QUANTITIES PLAN	ESTIMATED QUANTITIES BID SCHEDULE
	PLAN SHEET SECTION -------->>																
20303PF	REMOVAL OF BRIDGE PAVEMENT (VARIABLE DEPTH 1" TO 2 1/2")	SQYD	0	0	0	616	0	0	0	0	0					616	616
20303QA	REMOVAL OF ASPHALT SIDEWALK	SQYD	0	411	336	364	398	333	327	322	319					2810	2,810
20303QB	REMOVAL OF PORTLAND CEMENT CONCRETE SIDEWALK	SQYD	71	157	0	0	0	0	0	0	0					228	228
20307	SAWCUTTING PAVEMENT	LNFT	0	251	40	151	203	166	110	0	81					1002	1,002
20401	ROADWAY EXCAVATION	CUYD	501	58	0	0	0	0	0	0	267					826	826
20402	SUBEXCAVATION	CUYD	114	2	2	2	2	1	1	0	54					178	178
20403	UNCLASSIFIED BORROW	CUYD	131	2.5	2.5	2.5	2.5	1.5	1	0	62					206	206
20418	HAND EXCAVATION	CUYD	123	0	0	0	0	0	0	0	195					318	318
20421	ROCK EXCAVATION	CUYD	0	0	0	0	0	0	0	5	0					5	5
20701BA	EARTHWORK GEOTEXTILE, TYPE II-A	SQYD	0	60	60	60	60	60	60	60	60					480	480
30102ZK	AGGREGATE BASE, GRADING C OR D, 4-INCH DEPTH	SQYD	71	169	135	18	0	0	0	0	25					418	418
30102ZN	AGGREGATE BASE, GRADING C OR D, 6-INCH DEPTH	SQYD	3003	344	0	60	66	54	36	0	1603					5166	5,166
40108	RUMBLE STRIP	LNFT	0	0	85	550	500	500	500	550	550					3235	3,235
41301K	ASPHALT PAVEMENT MILLING, 4-INCH DEPTH (VARIABLE FROM >2-INCH TO 4-INCH)	SQYD	0	2917	2679	3022	2282	2252	1188	1330	1561					17231	17,231
41301N	ASPHALT PAVEMENT MILLING, 6-INCH DEPTH (VARIABLE FROM >4-INCH TO 6-INCH)	SQYD	0	0	0	0	0	0	1188	1330	1561					4079	4,079
41801ABC	SUPERPAVE ASPHALT CONCRETE PAVEMENT, 3/8-INCH NOMINAL MAXIMUM SIZE AGGREGATE, 0.3 - <3 ESAL, TYPE 3 PAVEMENT SMOOTHNESS (PG70-22)	TON	250	362	298	336	254	250	264	296	525					2835	2,835
41801CB	SUPERPAVE ASPHALT CONCRETE PAVEMENT, 3/4-INCH NOMINAL MAXIMUM SIZE AGGREGATE, 0.3 - <3 ESAL, (PG70-22)	TON	417	3	0	0	0	0	0	0	0					420	420
41802CB	SUPERPAVE ASPHALT CONCRETE PAVEMENT, 3/4-INCH NOMINAL MAXIMUM SIZE AGGREGATE, 0.3 - <3 ESAL, WEDGE AND LEVELING (PG70-22)	TON	0	324	298	336	254	250	396	444	520					2822	2,822
50101N	REINFORCED PORTLAND CEMENT CONCRETE PAVEMENT, 6-INCH DEPTH	SQYD	0	323	0	40	66	54	36	0	1603					2122	2,122
50101N	REINFORCED PORTLAND CEMENT CONCRETE PAVEMENT, 6-INCH DEPTH (PATCHING / BASE REPAIR)	SQYD	0	50	50	50	50	50	50	0	0					300	300
50102K	PLAIN PORTLAND CEMENT CONCRETE PAVEMENT, 4-INCH DEPTH	SQYD	0	136	120	0	0	0	0	0	0					256	256
55207	STRUCTURAL CONCRETE, FOR OVERLAY	SQYD	0	0	0	616	0	0	0	0	0					616	616

SITE 1 - THOMPSON BOAT CENTER ACCESS ROAD AND PARKING LOT
SITE 2 - ROCK CREEK PKWY. FROM STA. 1+29.7 TO STA. 6+50
SITE 3 - ROCK CREEK PKWY. FROM STA. 6+50 TO STA. 11+00
SITE 4 - ROCK CREEK PKWY. FROM STA. 11+00 TO STA. 16+50
SITE 5 - ROCK CREEK PKWY. FROM STA. 16+50 TO STA. 21+50
SITE 6 - ROCK CREEK PKWY. FROM STA. 21+50 TO STA. 26+50
SITE 7 - ROCK CREEK PKWY. FROM STA. 26+50 TO STA. 31+50
SITE 8 - ROCK CREEK PKWY. FROM STA. 31+50 TO STA. 37+00
SITE 9 - ROCK CREEK PKWY. FROM STA. 37+00 TO STA. 42+50
AND THE 'P' STREET RAMP

U.S. DEPARTMENT OF TRANSPORTATION
FEDERAL HIGHWAY ADMINISTRATION
EASTERN FEDERAL LANDS HIGHWAY DIVISION
STERLING, VIRGINIA

ROCK CREEK AND POTOMAC PARKWAY

SUMMARY OF QUANTITIES

ITEM	DESCRIPTION	UNIT	SITE 1	SITE 2	SITE 3	SITE 4	SITE 5	SITE 6	SITE 7	SITE 8	SITE 9					ESTIMATED QUANTITIES PLAN	ESTIMATED QUANTITIES BID SCHEDULE
	PLAN SHEET SECTION -------->>																
55209	REPAIR CONCRETE	SQFT	0	0	0	45	0	0	0	0	0					45	45
55227	CLEAN CONCRETE SURFACE	SQFT	0	0	0	5540	0	0	0	0	0					5540.0	5,540.0
60201J	15-INCH PIPE CULVERT	LNFT	0	124	0	113	191	153	110	0	0					691	691
60403FAF	INLET, TYPE 6A-6 (MODIFIED)	EACH	0	2	0	0	0	0	0	0	0					2	2
60403FAFA	INLET, TYPE 6A-6 DOUBLE (MODIFIED)	EACH	0	0	0	1	3	2	0	0	0					6	6
60404B	CATCH BASIN, TYPE 2	EACH	2	0	0	0	0	0	0	0	0					2	2
60405	MANHOLE ADJUSTMENT	EACH	0	0	6	0	1	1	0	0	0					8	8
60413	CONCRETE INLET TOPS	EACH	0	0	4	0	0	0	0	0	0					4	4
60414FAF	METAL GRATE, TYPE 6A-6	EACH	2	1	2	0	6	0	4	0	10					25	25
60501	UNDERDRAIN SYSTEM	LNFT	0	0	0	0	0	50	320	0	0					370	370
60703	CLEANING CULVERTS IN PLACE	LNFT	0	0	0	0	231	0	225	0	497					953	953
60705H	LINING 12-INCH PIPE CULVERT	LNFT	0	0	0	0	83	0	0	0	0					83	83
60705J	LINING 15-INCH PIPE CULVERT	LNFT	0	0	0	0	114	0	225	0	252					591	591
60705K	LINING 18-INCH PIPE CULVERT	LNFT	0	0	0	0	34	0	0	0	104					138	138
60705M	LINING 24-INCH PIPE CULVERT	LNFT	0	0	0	0	0	0	0	0	141					141	141
60710	CLEAN DRAINAGE STRUCTURES	EACH	2	2	10	1	4	0	4	0	6					29	29
60902T	PORTLAND CEMENT CONCRETE CURB AND GUTTER, 11-INCH DEPTH (MOUNTABLE)	LNFT	0	0	0	0	43	147	107	0	1053					1350	1,350
60902V	PORTLAND CEMENT CONCRETE CURB AND GUTTER, 13-INCH DEPTH (NON-MOUNTABLE)	LNFT	1534	21	40	143	140	0	0	0	0					1878	1,878
60903AX	STONE CURB, TYPE 1, 16-INCH DEPTH (GRANITE)	LNFT	0	1883	1398	0	0	0	0	0	0					3281	3,281
61501A	ASPHALT CONCRETE SIDEWALK	SQYD	0	438	414	482	454	417	417	436	487					3545	3,545
61501B	PORTLAND CEMENT CONCRETE SIDEWALK	SQYD	59	127	0	0	0	0	0	0	0					186	186
61503B	PORTLAND CEMENT CONCRETE MEDIAN	SQYD	0	0	10	0	0	0	0	0	0					10	10
61505B	PORTLAND CEMENT CONCRETE WHEELCHAIR RAMP	SQYD	12	34	15	18	0	0	0	0	25					104	104
61701H	GUARDRAIL SYSTEM SBTB	LNFT	0	0	158	540	772	500	500	550	760					3780	3,780
61706	CONNECTION TO STRUCTURE	EACH	0	0	0	4	0	0	0	0	0					4	4
62016	RESET STONE MASONRY (GRANITE COBBLES)	SQYD	136	120	0	0	0	0	0	0	0					256	256
62401F	FURNISHING AND PLACING TOPSOIL, 2-INCH DEPTH	SQYD	260	1033	414	338	302	334	297	271	477					3726	3,726

SITE 1 - THOMPSON BOAT CENTER ACCESS ROAD AND PARKING LOT
SITE 2 - ROCK CREEK PKWY. FROM STA. 1+29.7 TO STA. 6+50
SITE 3 - ROCK CREEK PKWY. FROM STA. 6+50 TO STA. 11+00
SITE 4 - ROCK CREEK PKWY. FROM STA. 11+00 TO STA. 16+50
SITE 5 - ROCK CREEK PKWY. FROM STA. 16+50 TO STA. 21+50
SITE 6 - ROCK CREEK PKWY. FROM STA. 21+50 TO STA. 26+50
SITE 7 - ROCK CREEK PKWY. FROM STA. 26+50 TO STA. 31+50
SITE 8 - ROCK CREEK PKWY. FROM STA. 31+50 TO STA. 37+00
SITE 9 - ROCK CREEK PKWY. FROM STA. 37+00 TO STA. 42+50
AND THE 'P' STREET RAMP

U.S. DEPARTMENT OF TRANSPORTATION
FEDERAL HIGHWAY ADMINISTRATION
EASTERN FEDERAL LANDS HIGHWAY DIVISION
STERLING, VIRGINIA

ROCK CREEK AND POTOMAC PARKWAY

SUMMARY OF QUANTITIES

NPS	REG	STATE	PROJECT	SHEET NO.	TOTAL SHEETS
821 / 41920	NC	DC	PRA-ROCR 3A5, 204(1)	11	139

ITEM	DESCRIPTION	UNIT	SITE 1	SITE 2	SITE 3	SITE 4	SITE 5	SITE 6	SITE 7	SITE 8	SITE 9					ESTIMATED QUANTITIES PLAN	ESTIMATED QUANTITIES BID SCHEDULE
	PLAN SHEET SECTION -------->>																
62401K	FURNISHING AND PLACING TOPSOIL, 4-INCH DEPTH	SQYD	643	0	0	0	0	0	0	0	0					643	643
62505A	MULCHING, DRY METHOD (TEMPORARY HIKER/BIKER TRAIL)	SQYD	251	0	0	0	0	0	0	0	306					557	557
62701A	SOLID SOD	SQYD	903	1033	414	338	302	334	297	271	477					4369	4,369
63304CC	SIGNS, ALUMINUM PANELS, TYPE 3 SHEETING	SQFT	11	19	17	19	0	0	0	0	42					108	108
63308A	REMOVING AND RESETTING SIGN	EACH	0	5	1	1	1	0	0	0	5					13	13
63311BA	POSTS, WOOD 4" X 4"	EACH	4	3	2	3	0	0	0	0	5					17	17
63401DA	PAVEMENT MARKINGS, TYPE D, SOLID	LNFT	0	0	340	1600	0	0	0	0	1382					3322	3,322
63401DB	PAVEMENT MARKINGS, TYPE D, BROKEN (REVERSED PATTERN)	LNFT	0	0	0	240	1000	1000	1000	1100	1100					5440	5,440
63401HA	PAVEMENT MARKINGS, TYPE H, SOLID	LNFT	1675	3160	2429	1978	1000	1000	1000	1100	2880					16222	16,222
63401HB	PAVEMENT MARKINGS, TYPE H, BROKEN	LNFT	0	850	900	1270	1000	1000	1000	1100	1100					8220	8,220
63402H	PAVEMENT MARKINGS, TYPE H	SQFT	64	0	0	0	0	0	0	0	0					64	64
63503A	ADVANCE WARNING ARROW PANEL, TYPE A	EACH	0	2	0	1	0	0	0	0	0					3	3
63505C	BARRICADE, TYPE 3	EACH	3	0	0	0	0	0	0	0	2					5	5
63507	CONSTRUCTION SIGN	SQFT	279	180	116	87	123	38	81	5	308					1217	1,217
63508B	DRUM, TYPE B	EACH	12	13	20	13	10	10	10	11	51					150	150
63511	TEMPORARY CONCRETE BARRIER	LNFT	0	0	0	235	0	0	0	0	905					1140	1,140
63512	MOVING TEMPORARY CONCRETE BARRIER	LNFT	0	0	0	450	0	0	0	0	0					450	450
63514	TEMPORARY PAVEMENT MARKINGS	LNFT	290	3315	2072	1928	1000	1000	1000	1080	2969					14654	14,654
63519	PAVEMENT MARKING REMOVAL	LNFT	0	3315	2072	1928	1000	1000	1000	1080	2376					13771	13,771
63520	VERTICAL PANEL	EACH	0	0	0	2	0	0	0	0	1					3	3
63521A	WARNING LIGHT, TYPE A	EACH	6	0	0	4	0	0	0	0	4					14	14
63521C	WARNING LIGHT, TYPE C	EACH	12	13	20	13	10	10	10	11	51					150	150
63523	MAINTENANCE OF TRAFFIC, PAVEMENT PATCH	TON	0	0	0	0	0	0	0	0	50					50	50
63524	VARIABLE MESSAGE SIGN	EACH	1	2	2	0	0	0	0	0	4					9	9
63525	TEMPORARY CRASH CUSHION	EACH	0	0	0	2	0	0	0	0	2					4	4
63526	MOVING TEMPORARY CRASH CUSHION	EACH	0	0	0	5	0	0	0	0	1					6	6
63527A	REPLACEMENT CARTRIDGES FOR CRASH CUSHION	EACH	0	0	0	7	0	0	0	0	3					10	10
63531	TEMPORARY SNOW FENCE	LNFT	438	148	271	163	0	0	0	0	740					1760	1,760

SITE 1 - THOMPSON BOAT CENTER ACCESS ROAD AND PARKING LOT
SITE 2 - ROCK CREEK PKWY. FROM STA. 1+29.7 TO STA. 6+50
SITE 3 - ROCK CREEK PKWY. FROM STA. 6+50 TO STA. 11+00
SITE 4 - ROCK CREEK PKWY. FROM STA. 11+00 TO STA. 16+50
SITE 5 - ROCK CREEK PKWY. FROM STA. 16+50 TO STA. 21+50
SITE 6 - ROCK CREEK PKWY. FROM STA. 21+50 TO STA. 26+50
SITE 7 - ROCK CREEK PKWY. FROM STA. 26+50 TO STA. 31+50
SITE 8 - ROCK CREEK PKWY. FROM STA. 31+50 TO STA. 37+00
SITE 9 - ROCK CREEK PKWY. FROM STA. 37+00 TO STA. 42+50
AND THE 'P' STREET RAMP

U.S. DEPARTMENT OF TRANSPORTATION
FEDERAL HIGHWAY ADMINISTRATION
EASTERN FEDERAL LANDS HIGHWAY DIVISION
STERLING, VIRGINIA

ROCK CREEK AND POTOMAC PARKWAY

SUMMARY OF QUANTITIES

9/7/2006 2:22:44 PM M:\Projects\rocr\3a5_204\proj_dev\Cadd\REVISED_sq04cml.dgn

ITEM	DESCRIPTION	UNIT	SITE 1	SITE 2	SITE 3	SITE 4	SITE 5	SITE 6	SITE 7	SITE 8	SITE 9					ESTIMATED QUANTITIES PLAN	ESTIMATED QUANTITIES BID SCHEDULE
	PLAN SHEET SECTION -------->>																
63606CB	CONDUIT, 1-INCH, RIGID GALVANIZED STEEL	LNFT	0	15	0	0	0	0	0	0	0					15	15
63606GA	CONDUIT, 2-INCH, PVC	LNFT	635	615	290	650	920	1000	1000	1100	1440					7650	7,650
63606GB	CONDUIT, 2-INCH, RIGID GALVANIZED STEEL (BRIDGE ATTACHED)	LNFT	0	0	225	0	0	0	0	0	0					225	225
63606GB	CONDUIT, 2-INCH, RIGID GALVANIZED STEEL (BORED)	LNFT	0	0	25	0	0	0	0	0	0					25	25
63606LA	CONDUIT, 4-INCH, PVC (CONCRETE ENCASED)	LNFT	0	25	0	0	0	0	0	0	0					25	25
63606LB	CONDUIT, 4-INCH, RIGID GALVANIZED STEEL	LNFT	0	0	0	0	0	0	0	0	70					70	70
63606LB	CONDUIT, 4-INCH, RIGID GALVANIZED STEEL (BORED)	LNFT	0	85	40	160	0	0	0	0	0					285	285
63607C	ELECTRICAL CONDUCTORS, 10 AWG	LNFT	400	280	710	280	350	350	280	280	630					3560	3,560
63607F	ELECTRICAL CONDUCTORS, 4 AWG	LNFT	2540	2660	1160	2600	3680	4000	4000	4400	5760					30800	30,800
63608A	LUMINAIRES, TYPE A (400 WATT MH COBRAHEAD)	EACH	0	4	3	4	5	5	4	4	9					38	38
63608B	LUMINAIRES, TYPE B (150 WATT HPS HOLOPHANE WALLPACK)	EACH	0	0	10	0	0	0	0	0	0					10	10
63608D	LUMINAIRES, TYPE WASHINGTON STYLE	EACH	8	0	0	0	0	0	0	0	0					8	8
63609A	POLES, TYPE A (30 FOOT STEEL)	EACH	0	4	3	4	5	5	4	4	9					38	38
63609F	POLES, TYPE WASHINGTON GLOBE NO. 14N LIGHT STANDARD	EACH	8	0	0	0	0	0	0	0	0					8	8
63610	PULL BOX	EACH	0	1	0	0	0	0	0	0	0					1	1
63614	JUNCTION BOX	EACH	8	0	0	0	0	0	0	0	0					8	8
63617A	CABLE CONNECTOR KIT, TYPE 1	EACH	16	16	22	14	20	30	24	24	48					214	214
63617B	CABLE CONNECTOR KIT, TYPE 2	EACH	8	8	22	8	6	0	0	0	12					64	64
63617C	CABLE CONNECTOR KIT, TYPE 3	EACH	8	0	4	0	4	10	8	8	6					48	48
63617D	CABLE CONNECTOR KIT, TYPE 4	EACH	4	4	0	4	0	0	0	0	0					12	12
63619	TRENCHING AND BACKFILL	LNFT	635	530	250	490	920	1000	1000	1100	1480					7405	7,405
63620	BREAKAWAY POLE BASE	EACH	0	4	3	1	1	3	2	3	8					25	25
63621	MANHOLE, ELECTRICAL (3 FT X 3 FT)	EACH	3	1	0	2	0	0	0	0	2					8	8
63626D	ELECTRICAL GROUND, 8 AWG	LNFT	635	615	290	650	920	1000	1000	1100	1440					7650	7,650
63627	ADJUST ELECTRICAL MANHOLE	EACH	2	0	0	0	0	0	0	0	0					2	2
63628A	LIGHTPOLE FOUNDATION, CONCRETE	EACH	8	4	3	4	5	5	4	4	9					46	46
63637	GLOBES, WASHINGTON DC FIXTURE	EACH	8	0	0	0	0	0	0	0	0					8	8

SITE 1 - THOMPSON BOAT CENTER ACCESS ROAD AND PARKING LOT
SITE 2 - ROCK CREEK PKWY. FROM STA. 1+29.7 TO STA. 6+50
SITE 3 - ROCK CREEK PKWY. FROM STA. 6+50 TO STA. 11+00
SITE 4 - ROCK CREEK PKWY. FROM STA. 11+00 TO STA. 16+50
SITE 5 - ROCK CREEK PKWY. FROM STA. 16+50 TO STA. 21+50
SITE 6 - ROCK CREEK PKWY. FROM STA. 21+50 TO STA. 26+50
SITE 7 - ROCK CREEK PKWY. FROM STA. 26+50 TO STA. 31+50
SITE 8 - ROCK CREEK PKWY. FROM STA. 31+50 TO STA. 37+00
SITE 9 - ROCK CREEK PKWY. FROM STA. 37+00 TO STA. 42+50
AND THE 'P' STREET RAMP

U.S. DEPARTMENT OF TRANSPORTATION
FEDERAL HIGHWAY ADMINISTRATION
EASTERN FEDERAL LANDS HIGHWAY DIVISION
STERLING, VIRGINIA

ROCK CREEK AND POTOMAC PARKWAY

SUMMARY OF QUANTITIES

NPS	REG	STATE	PROJECT	SHEET NO.	TOTAL SHEETS
821 / 41920	NC	DC	PRA-ROCR 3A5, 204(1)	13	139

ITEM	DESCRIPTION	UNIT	SITE 1	SITE 2	SITE 3	SITE 4	SITE 5	SITE 6	SITE 7	SITE 8	SITE 9					ESTIMATED QUANTITIES PLAN	ESTIMATED QUANTITIES BID SCHEDULE
	PLAN SHEET SECTION -------->>																
63640	COMPENSATION FOR UTILITY COMPANY WORK	CTSM														1	1
63648	TRAFFIC DETECTOR WIRE (LOOP WIRE)	LNFT	0	600	0	0	0	0	0	0	0					600	600
63648	TRAFFIC DETECTOR WIRE (LEAD-IN CABLE)	LNFT	0	39	0	0	0	0	0	0	0					39	39
63701	FIELD OFFICE	EACH														1	1
63801	LOCATE UTILITIES	EACH	0	4	3	2	2	2	2	0	0					15	15
64906F	REMOVE AND RESET PARKING METER	EACH	3	0	0	0	0	0	0	0	0					3	3

SITE 1 - THOMPSON BOAT CENTER ACCESS ROAD AND PARKING LOT
SITE 2 - ROCK CREEK PKWY. FROM STA. 1+29.7 TO STA. 6+50
SITE 3 - ROCK CREEK PKWY. FROM STA. 6+50 TO STA. 11+00
SITE 4 - ROCK CREEK PKWY. FROM STA. 11+00 TO STA. 16+50
SITE 5 - ROCK CREEK PKWY. FROM STA. 16+50 TO STA. 21+50
SITE 6 - ROCK CREEK PKWY. FROM STA. 21+50 TO STA. 26+50
SITE 7 - ROCK CREEK PKWY. FROM STA. 26+50 TO STA. 31+50
SITE 8 - ROCK CREEK PKWY. FROM STA. 31+50 TO STA. 37+00
SITE 9 - ROCK CREEK PKWY. FROM STA. 37+00 TO STA. 42+50
AND THE 'P' STREET RAMP

U.S. DEPARTMENT OF TRANSPORTATION
FEDERAL HIGHWAY ADMINISTRATION
EASTERN FEDERAL LANDS HIGHWAY DIVISION
STERLING, VIRGINIA

ROCK CREEK AND POTOMAC PARKWAY

SUMMARY OF QUANTITIES

9/7/2006 2:23:54 PM M:\Projects\rocr\3a5_204\proj_dev\Cadd\REVISED_sq06cml.dgn

NPS	REG	STATE	PROJECT	SHEET NO.	TOTAL SHEETS
821 (11/92)	NC	DC	FRA-RICR 3(6, 29(11)	14	139

20301AT, REMOVAL OF RAISED PAVEMENT MARKER

PLAN SHEET	STATION	EACH	DESCRIPTION
3	STA. 10+15 TO STA. 11+00	6	CENTERLINE ROCK CREEK PWKY.
4	STA. 11+00 TO STA. 16+50	26	CENTERLINE ROCK CREEK PWKY.
5	STA. 16+50 TO STA. 21+50	26	CENTERLINE ROCK CREEK PWKY.
6	STA. 21+50 TO STA. 26+50	26	CENTERLINE ROCK CREEK PWKY.
7	STA. 26+50 TO STA. 31+50	26	CENTERLINE ROCK CREEK PWKY.
8	STA. 31+50 TO STA. 37+00	26	CENTERLINE ROCK CREEK PWKY.
9	STA. 37+00 TO STA. 42+50	26	CENTERLINE ROCK CREEK PWKY.
	TOTAL QUANTITY	162	

20302RB, REMOVAL OF PORTLAND CEMENT CONCRETE CURB

PLAN SHEET	STATION	L.F.	DESCRIPTION
2	STA. 0+65 ACCESS RD. TO STA. 6+50 ROCK CREEK PKWY.	492	LEFT CURB ROCK CREEK PWKY.
2	STA. 5+93 TO STA. 6+50	60	LEFT CURB ROCK CREEK PKWY. AT 'K' ST. RAMP
2	STA. 6+29 TO STA. 6+42	17	EAST CURB 'K' ST. RAMP
2	STA. 2+75 TO STA. 6+50	376	RIGHT CURB ROCK CREEK PKWY.
3	STA. 6+50 TO STA. 9+22	308	LEFT CURB ROCK CREEK PKWY.
3	STA. 6+50 TO STA. 10+13	364	RIGHT CURB ROCK CREEK PKWY.
	TOTAL QUANTITY	1617	

20302RD, REMOVAL OF STONE CURB

PLAN SHEET	STATION	L.F.	DESCRIPTION
2	STA. 0+19 ACCESS RD. TO STA. 0+89 ACCESS RD.	78	LEFT CURB ACCESS RD.
2	STA. 0+65 ACCESS RD. TO STA. 0+83 ACCESS RD.	18	RIGHT CURB ACCESS RD.
2	STA. 2+41 TO STA. 2+75	34	RIGHT CURB ROCK CREEK PKWY.
	TOTAL QUANTITY	130	

20302SB, REMOVAL OF PORTLAND CEMENT CONCRETE CURB AND GUTTER

PLAN SHEET	STATION	L.F.	DESCRIPTION
1	STA. 1+00 ACCESS RD. TO STA. 2+16 ACCESS RD.	116	LEFT CURB ACCESS RD.
1	STA. 1+00 ACCESS RD. TO 0+44 PARKING LOT	77	RIGHT CURB ACCESS RD. TO S.E. CORNER PARKING LOT
1	STA. 0+44 PARKING LOT TO STA. 2+71 PARKING LOT	227	RIGHT CURB PARKING LOT
1	STA. 2+71 PARKING LOT, 65' LEFT TO 65' RIGHT	130	NORTH CURB PARKING LOT
1	STA. 0+53 PARKING LOT TO STA. 2+71 PARKING LOT	216	LEFT CURB PARKING LOT
1	STA. 0+53 PARKING LOT TO STA. 2+76 ACCESS RD.	108	S.W. CORNER PARKING LOT TO RIGHT CURB ACCESS RD.
1	STA. 1+13 PARKING LOT TO STA. 1+29 PARKING LOT	58	ISLAND RIGHT SIDE OF PARKING LOT
1	STA. 0+11 PARKING LOT TO STA. 2+51 PARKING LOT	602	CENTER ISLAND PARKING LOT
2	STA. 0+89 ACCESS RD. TO STA. 1+00 ACCESS RD.	11	LEFT CURB ACCESS RD.
2	STA. 0+89 ACCESS RD. TO STA. 1+00 ACCESS RD.	10	RIGHT CURB ACCESS RD.
3	STA. 8+65 TO STA. 8+85	20	SOUTH CURB 'K' ST. RAMP
3	STA. 9+01 TO STA. 9+21	20	NORTH CURB 'K' ST. RAMP
4	STA. 13+48 TO STA. 13+55	15	SOUTH CURB PENNSYLVANIA AVE. RAMP
4	STA. 13+65 TO STA. 13+70	15	NORTH CURB PENNSYLVANIA AVE. RAMP
4	STA. 15+37 TO STA. 16+50	113	LEFT CURB ROCK CREEK PKWY.
5	STA. 16+50 TO STA. 17+94	140	LEFT CURB ROCK CREEK PKWY.
5	STA. 21+07 TO STA. 21+50	43	LEFT CURB ROCK CREEK PKWY.
6	STA. 21+50 TO STA. 22+50	100	LEFT CURB ROCK CREEK PKWY.
6	STA. 26+03 TO STA. 26+50	47	LEFT CURB ROCK CREEK PKWY.
7	STA. 26+50 TO STA. 27+57	107	LEFT CURB ROCK CREEK PKWY.
9	STA. 1+75 'P' ST. RAMP TO STA. 5+27 'P' ST. RAMP	390	LEFT CURB 'P' ST. RAMP
9	STA. 0+66 'P' ST. RAMP TO STA. 5+27 'P' ST. RAMP	461	RIGHT CURB 'P' ST. RAMP
9	STA. 0+66 'P' ST. RAMP TO STA. 1+62 'P' ST. RAMP	202	LEFT CURB 'P' ST. RAMP
	TOTAL QUANTITY	3228	

20302W, REMOVAL OF GUARDRAIL

PLAN SHEET	STATION	L.F.	DESCRIPTION
3	STA. 9+92 TO STA. 11+00	108	LEFT SIDE ROCK CREEK PWKY.
4	STA. 11+00 TO STA. 11+80	80	LEFT SIDE ROCK CREEK PKWY.
4	STA. 12+74 TO STA. 13+23	55	LEFT SIDE ROCK CREEK PARKWAY
4	STA. 15+42 TO STA. 16+50	108	RIGHT SIDE ROCK CREEK PKWY.
5	STA. 17+58 TO STA. 18+93	135	LEFT SIDE ROCK CREEK PKWY.
5	STA. 16+50 TO STA. 19+22	272	RIGHT SIDE ROCK CREEK PKWY.
	TOTAL QUANTITY	758	

20303AD, REMOVAL OF GRANITE COBBLES

PLAN SHEET	STATION	S.Y.	DESCRIPTION
2	STA. 2+45 TO STA. 6+50	136	MEDIAN ROCK CREEK PKWY.
3	STA. 6+50 TO STA. 10+10	120	MEDIAN ROCK CREEK PKWY.
	TOTAL QUANTITY	256	

20303AEB, REMOVAL OF PORTLAND CEMENT CONCRETE MEDIAN

PLAN SHEET	STATION	S.Y.	DESCRIPTION
2	STA. 2+45 TO STA. 6+50	181	MEDIAN ROCK CREEK PKWY.
3	STA. 6+50 TO STA. 10+10	160	MEDIAN ROCK CREEK PKWY.
	TOTAL QUANTITY	341	

20303PA, REMOVAL OF ASPHALT PAVEMENT

PLAN SHEET	STATION	S.Y.	DESCRIPTION
1	STA. 0+44 PARKING LOT TO STA. 2+71 PARKING LOT	2568	PARKING LOT PAVEMENT
1	STA. 1+00 ACCESS RD. TO STA. 2+16 ACCESS RD.	435	ACCESS RD. PAVEMENT
2	STA. 0+89 ACCESS RD. TO STA. 1+00 ACCESS RD.	20	ACCESS RD. PAVEMENT
4	STA. 15+31 TO STA. 16+50	40	LEFT SIDE ROCK CREEK PKWY.
5	STA. 16+50 TO STA. 18+00	50	LEFT SIDE ROCK CREEK PKWY.
5	STA. 21+04 TO STA. 21+50	16	LEFT SIDE ROCK CREEK PKWY.
6	STA. 21+50 TO STA. 22+56	36	LEFT SIDE ROCK CREEK PKWY.
6	STA. 25+96 TO STA. 26+50	18	LEFT SIDE ROCK CREEK PKWY.
7	STA. 26+50 TO STA. 27+56	36	LEFT SIDE ROCK CREEK PKWY.
9	STA. 0+66 'P' ST. RAMP TO STA. 5+27 'P' ST. RAMP	1603	'P' ST. RAMP PAVEMENT
	TOTAL QUANTITY	4822	

20303PBN, REMOVAL OF CEMENT CONCRETE PAVEMENT

PLAN SHEET	STATION	S.Y.	DESCRIPTION
2	STA. 1+62 TO STA. 3+87	323	RIGHT TURN LANE AND ACCESS RD. PAVEMENT
4	STA. 15+31 TO STA. 16+50	40	LEFT SIDE ROCK CREEK PKWY.
5	STA. 16+50 TO STA. 18+00	50	LEFT SIDE ROCK CREEK PKWY.
5	STA. 21+04 TO STA. 21+50	16	LEFT SIDE ROCK CREEK PKWY.
6	STA. 21+50 TO STA. 22+56	36	LEFT SIDE ROCK CREEK PKWY.
6	STA. 25+96 TO STA. 26+50	18	LEFT SIDE ROCK CREEK PKWY.
7	STA. 26+50 TO STA. 27+56	36	LEFT SIDE ROCK CREEK PKWY.
9	STA. 0+66 'P' ST. RAMP TO STA. 5+27 'P' ST. RAMP	1603	'P' ST. PAVEMENT
	TOTAL QUANTITY	2122	

PLAN SHEET 1 - THOMPSON BOAT CENTER ACCESS ROAD AND PARKING LOT
PLAN SHEET 2 - ROCK CREEK PKWY. FROM STA. 1+29.7 TO STA. 6+50
PLAN SHEET 3 - ROCK CREEK PKWY. FROM STA. 6+50 TO STA. 11+00
PLAN SHEET 4 - ROCK CREEK PKWY. FROM STA. 11+00 TO STA. 16+50
PLAN SHEET 5 - ROCK CREEK PKWY. FROM STA. 16+50 TO STA. 21+50
PLAN SHEET 6 - ROCK CREEK PKWY. FROM STA. 21+50 TO STA. 26+50
PLAN SHEET 7 - ROCK CREEK PKWY. FROM STA. 26+50 TO STA. 31+50
PLAN SHEET 8 - ROCK CREEK PKWY. FROM STA. 31+50 TO STA. 37+00
PLAN SHEET 9 - ROCK CREEK PKWY. FROM STA. 37+00 TO STA. 42+50
AND THE 'P' STREET RAMP

U.S. DEPARTMENT OF TRANSPORTATION
FEDERAL HIGHWAY ADMINISTRATION
EASTERN FEDERAL LANDS HIGHWAY DIVISION
STERLING, VIRGINIA

ROCK CREEK AND POTOMAC PARKWAY

SCHEDULES

20303PF, REMOVAL OF BRIDGE PAVEMENT

PLAN SHEET	STATION	S.Y.	DESCRIPTION
4	STA. 12+20 TO STA. 13+23	616	'L' STREET BRIDGE
	TOTAL QUANTITY	616	

20303QA, REMOVAL OF ASPHALT SIDEWALK

PLAN SHEET	STATION	S.Y.	DESCRIPTION
2	STA. 0+33 ACCESS RD. TO STA. 0+77 ACCESS RD.	46	LEFT SIDE ACCESS RD.
2	STA. 2+10 TO STA. 6+15	358	LEFT SIDE ROCK CREEK PKWY.
2	STA. 6+35 TO STA. 6+50	7	LEFT SIDE ROCK CREEK PKWY AT 'K' ST. RAMP
3	STA. 6+50 TO STA. 8+78	151	LEFT SIDE ROCK CREEK PKWY.
3	STA. 9+02 TO STA. 11+00	185	LEFT SIDE ROCK CREEK PKWY.
4	STA. 11+00 TO STA. 11+67	60	LEFT SIDE ROCK CREEK PKWY.
4	STA. 12+74 TO STA. 13+53	98	LEFT SIDE ROCK CREEK PKWY.
4	STA. 13+64 TO STA. 15+36	178	LEFT SIDE ROCK CREEK PKWY.
4	STA. 16+09 TO STA. 16+50	28	LEFT SIDE ROCK CREEK PKWY.
5	STA. 16+50 TO STA. 21+50	398	LEFT SIDE ROCK CREEK PKWY.
6	STA. 21+50 TO STA. 26+50	333	LEFT SIDE ROCK CREEK PKWY.
7	STA. 26+50 TO STA. 31+50	327	LEFT SIDE ROCK CREEK PKWY.
8	STA. 31+50 TO STA. 37+00	322	LEFT SIDE ROCK CREEK PKWY.
9	STA. 37+00 TO STA. 39+58	173	LEFT SIDE ROCK CREEK PKWY.
9	STA. 1+56 'P' ST. RAMP TO STA. 1+71 'P' ST. RAMP	12	LEFT SIDE 'P' ST. RAMP
9	STA. 1+54 'P' ST. RAMP TO STA. 42+44 ROCK CREEK PKWY.	119	RIGHT SIDE 'P' ST. RAMP/LEFT SIDE ROCK CREEK PKWY.
9	STA. 43+08 TO STA. 43+40	15	LEFT SIDE ROCK CREEK PKWY.
	TOTAL QUANTITY	2810	

20303QB, REMOVAL OF PORTLAND CEMENT CONCRETE SIDEWALK

PLAN SHEET	STATION	S.Y.	DESCRIPTION
1	STA. 1+00 ACCESS RD. TO STA. 2+16 ACCESS RD.	71	LEFT SIDE ACCESS RD.
2	STA. 0+27 ACCESS RD. TO STA. 1+00 ACCESS RD.	65	LEFT SIDE ACCESS RD.
2	STA. 1+54 TO STA. 2+69	92	RIGHT SIDE ROCK CREEK PKWY.
	TOTAL QUANTITY	228	

20307, SAWCUTTING PAVEMENT

PLAN SHEET	STATION	L.F.	DESCRIPTION
2	STA. 0+40 TO STA. 1+00 ACCESS RD.	197	PAVEMENT, LOOP DETECTOR LEFT SIDE ACCESS RD.
2	STA. 0+27 TO STA. 0+47 ACCESS RD.	37	TRAIL, LEFT SIDE ACCESS RD.
2	STA. 6+30 TO STA. 6+43	17	CURB, LEFT SIDE ROCK CREEK PKWY. AT 'K' ST. RAMP
3	STA. 8+65 TO STA. 8+85	20	CURB, LEFT SIDE ROCK CREEK PKWY. AT 'K' ST. RAMP
3	STA. 9+02 TO STA. 9+22	20	CURB, LEFT SIDE ROCK CREEK PKWY. AT 'K' ST. RAMP
4	STA. 13+55	15	CURB, LEFT SIDE AT PENNSYLVANIA AVE. RAMP
4	STA. 13+64	15	CURB, RIGHT SIDE AT PENNSYLVANIA AVE. RAMP
4	STA. 15+31 TO STA. 16+50	121	PAVEMENT, LEFT SIDE ROCK CREEK PKWY.
5	STA. 16+50 TO STA. 18+00	152	PAVEMENT, LEFT SIDE ROCK CREEK PKWY.
5	STA. 21+02 TO STA. 21+50	51	PAVEMENT, LEFT SIDE ROCK CREEK PKWY.
6	STA. 21+50 TO STA. 22+56	110	PAVEMENT, LEFT SIDE ROCK CREEK PKWY.
6	STA. 25+96 TO STA. 26+50	56	PAVEMENT, LEFT SIDE ROCK CREEK PKWY.
7	STA. 26+50 TO STA. 27+56	110	PAVEMENT, LEFT SIDE ROCK CREEK PKWY.
9	STA. 0+66 'P' ST. RAMP	20	PAVEMENT, 'P' ST. RAMP
9	STA. 1+70 'P' ST. RAMP	18	PAVEMENT, LEFT SIDE 'P' ST. RAMP
9	STA. 5+27 'P' ST. RAMP	38	PAVEMENT, 'P' ST. RAMP
9	STA. 43+40	5	TRAIL, LEFT SIDE ROCK CREEK PKWY.
	TOTAL QUANTITY	1002	

20401, ROADWAY EXCAVATION

PLAN SHEET	STATION	C.Y.	DESCRIPTION
1	STA. 1+00 ACCESS RD. TO STA. 2+16 ACCESS RD.	73	ACCESS RD. TO THOMPSON'S BOAT CENTER
1	STA. 0+44 PARKING LOT TO STA. 2+71 PARKING LOT	428	THOMPSON'S BOAT CENTER PARKING LOT
2	STA. 1+60 TO STA. 3+88	58	ACCESS RD. AND RIGHT TURN LANE
9	STA. 0+66 'P' ST. RAMP TO STA. 5+27 'P' ST. RAMP	267	'P' ST. RAMP
	TOTAL QUANTITY	826	

20421, ROCK EXCAVATION

PLAN SHEET	STATION	C.Y.	DESCRIPTION
8	STA. 32+95 TO STA. 33+07	1	LEFT SIDE ROCK CREEK PKWY.
8	STA. 33+15 TO STA. 33+21	1	LEFT SIDE ROCK CREEK PKWY.
8	STA. 33+91 TO STA. 34+09	3	LEFT SIDE ROCK CREEK PKWY.
	TOTAL QUANTITY	5	

40108, RUMBLE STRIP

PLAN SHEET	STATION	L.F.	DESCRIPTION
3	STA. 10+15 TO STA. 11+00	85	CENTERLINE ROCK CREEK PKWY.
4	STA. 11+00 TO STA. 16+50	550	CENTERLINE ROCK CREEK PKWY.
5	STA. 16+50 TO STA. 21+50	500	CENTERLINE ROCK CREEK PKWY.
6	STA. 21+50 TO STA. 26+50	500	CENTERLINE ROCK CREEK PKWY.
7	STA. 26+50 TO STA. 31+50	500	CENTERLINE ROCK CREEK PKWY.
8	STA. 31+50 TO STA. 37+00	550	CENTERLINE ROCK CREEK PKWY.
9	STA. 37+00 TO STA. 42+50	550	CENTERLINE ROCK CREEK PKWY.
	TOTAL QUANTITY	3235	

50101N, PORTLAND CEMENT CONCRETE BASE COURSE, REINFORCED, 6 INCH DEPTH

PLAN SHEET	STATION	S.Y.	DESCRIPTION
2	STA. 1+60 TO STA. 3+88	323	LEFT SIDE, ACCESS RD. AND RIGHT TURN LANE
4	STA. 15+31 TO STA. 16+50	40	LEFT SIDE ROCK CREEK PKWY.
5	STA. 16+50 TO STA. 18+00	50	LEFT SIDE ROCK CREEK PKWY.
5	STA. 21+04 TO STA. 21+50	16	LEFT SIDE ROCK CREEK PKWY.
6	STA. 21+50 TO STA. 22+56	36	LEFT SIDE ROCK CREEK PKWY.
6	STA. 25+96 TO STA. 26+50	18	LEFT SIDE ROCK CREEK PKWY.
7	STA. 26+50 TO STA. 27+56	36	LEFT SIDE ROCK CREEK PKWY.
9	STA. 0+66 'P' ST. RAMP TO STA. 5+27 'P' ST. RAMP	1603	'P' ST. RAMP
	TOTAL QUANTITY	2122	

50102K, PLAIN PORTLAND CEMENT CONCRETE PAVEMENT, 4 INCH DEPTH

PLAN SHEET	STATION	S.Y.	DESCRIPTION
2	STA. 2+45 TO STA. 6+50	136	MEDIAN ROCK CREEK PKWY.
3	STA. 6+50 TO STA. 10+10	120	MEDIAN ROCK CREEK PKWY.
	TOTAL QUANTITY	256	

PLAN SHEET 1 - THOMPSON BOAT CENTER ACCESS ROAD AND PARKING LOT
PLAN SHEET 2 - ROCK CREEK PKWY. FROM STA. 1+29.7 TO STA. 6+50
PLAN SHEET 3 - ROCK CREEK PKWY. FROM STA. 6+50 TO STA. 11+00
PLAN SHEET 4 - ROCK CREEK PKWY. FROM STA. 11+00 TO STA. 16+50
PLAN SHEET 5 - ROCK CREEK PKWY. FROM STA. 16+50 TO STA. 21+50
PLAN SHEET 6 - ROCK CREEK PKWY. FROM STA. 21+50 TO STA. 26+50
PLAN SHEET 7 - ROCK CREEK PKWY. FROM STA. 26+50 TO STA. 31+50
PLAN SHEET 8 - ROCK CREEK PKWY. FROM STA. 31+50 TO STA. 37+00
PLAN SHEET 9 - ROCK CREEK PKWY. FROM STA. 37+00 TO STA. 42+50
AND THE 'P' STREET RAMP

U.S. DEPARTMENT OF TRANSPORTATION
FEDERAL HIGHWAY ADMINISTRATION
EASTERN FEDERAL LANDS HIGHWAY DIVISION
STERLING, VIRGINIA

ROCK CREEK AND POTOMAC PARKWAY

SCHEDULES

55207, STRUCTURAL CONCRETE, FOR OVERLAY

PLAN SHEET	STATION	S.Y.	DESCRIPTION
4	STA. 12+20 TO STA. 13+23	616	'L' STREET BRIDGE
	TOTAL QUANTITY	616	

60501, UNDERDRAIN SYSTEM

PLAN SHEET	STATION	L.F.	DESCRIPTION
6	STA. 26+00 TO STA. 26+50	50	LEFT SIDE ROCK CREEK PKWY.
7	STA. 26+50 TO STA. 29+70	320	LEFT SIDE ROCK CREEK PKWY.
	TOTAL QUANTITY	370	

60902T, PORTLAND CEMENT CONCRETE CURB AND GUTTER, 11 INCH DEPTH – MOUNTABLE

PLAN SHEET	STATION	L.F.	DESCRIPTION
5	STA. 21+07 TO STA. 21+50	43	LEFT CURB ROCK CREEK PKWY.
6	STA. 21+50 TO STA. 22+50	100	LEFT CURB ROCK CREEK PKWY.
6	STA. 26+03 TO STA. 26+50	47	LEFT CURB ROCK CREEK PKWY.
7	STA. 26+50 TO STA. 27+57	107	LEFT CURB ROCK CREEK PKWY.
9	STA. 1+75 'P' ST. RAMP TO STA. 5+27 'P' ST. RAMP	390	LEFT CURB 'P' ST. RAMP
9	STA. 0+66 'P' ST. RAMP TO STA. 5+27 'P' ST. RAMP	461	RIGHT CURB 'P' ST. RAMP
9	STA. 0+66 'P' ST. RAMP TO STA. 1+62 'P' ST. RAMP	202	LEFT CURB 'P' ST. RAMP
	TOTAL QUANTITY	1350	

60902V, PORTLAND CEMENT CONCRETE CURB AND GUTTER, 13 INCH DEPTH – NON MOUNTABLE

PLAN SHEET	STATION	L.F.	DESCRIPTION
1	STA. 1+00 ACCESS RD. TO STA. 2+16 ACCESS RD.	116	LEFT CURB ACCESS RD.
1	STA. 1+00 ACCESS RD. TO 0+44 PARKING LOT	77	RIGHT CURB ACCESS RD. TO PARKING LOT
1	STA. 0+44 PARKING LOT TO STA. 2+71 PARKING LOT	227	RIGHT CURB PARKING LOT
1	STA. 2+71 PARKING LOT, 65' LEFT TO 65' RIGHT	130	NORTH CURB PARKING LOT
1	STA. 0+53 PARKING LOT TO STA. 2+71 PARKING LOT	216	LEFT CURB PARKING LOT
1	STA. 0+53 PARKING LOT TO STA. 2+76 ACCESS RD.	108	S.W. CORNER PARKING LOT TO ACCESS RD.
1	STA. 1+13 PARKING LOT TO STA. 1+29 PARKING LOT	58	ISLAND RIGHT SIDE OF PARKING LOT
1	STA. 0+11 PARKING LOT TO STA. 2+51 PARKING LOT	602	CENTER ISLAND PARKING LOT
2	STA. 0+89 ACCESS RD. TO STA. 1+00 ACCESS RD.	11	LEFT CURB ACCESS RD.
2	STA. 0+89 ACCESS RD. TO STA. 1+00 ACCESS RD.	10	RIGHT CURB ACCESS RD.
3	STA. 8+65 TO STA. 8+85	20	SOUTH CURB 'K' ST. RAMP
3	STA. 9+01 TO STA. 9+21	20	NORTH CURB 'K' ST. RAMP
4	STA. 13+48 TO STA. 13+55	15	SOUTH CURB PENNSYLVANIA AVE. RAMP
4	STA. 13+62 TO STA. 13+68	15	NORTH CURB PENNSYLVANIA AVE. RAMP
4	STA. 15+37 TO STA. 16+50	113	LEFT CURB ROCK CREEK PKWY.
5	STA. 16+50 TO STA. 17+94	140	LEFT CURB ROCK CREEK PKWY.
	TOTAL QUANTITY	1878	

60903AX, STONE (GRANITE) CURB, TYPE 1, 16 INCH DEPTH

PLAN SHEET	STATION	L.F.	DESCRIPTION
2	STA. 0+18 ACCESS RD. TO STA. 0+89 ACCESS RD.	78	LEFT CURB ACCESS RD.
2	STA. 0+89 ACCESS RD. TO STA. 6+50 ROCK CREEK PKWY.	510	LEFT CURB ROCK CREEK PKWY.
2	STA. 5+93 TO STA. 6+50	60	LEFT CURB ROCK CREEK PKWY. AT 'K' ST. RAMP
2	STA. 6+29 TO STA. 6+42	17	EAST CURB 'K' ST. RAMP AT PEDESTRIAN RAMP
2	STA. 2+41 TO STA. 6+50	404	RIGHT CURB ROCK CREEK PKWY.
2	STA. 2+44 TO STA 6+50	407	LEFT MEDIAN CURB ROCK CREEK PKWY.
2	STA. 2+44 TO STA. 6+50	407	RIGHT MEDIAN CURB ROCK CREEK PKWY.
3	STA. 6+50 TO STA. 9+22	308	LEFT CURB ROCK CREEK PKWY.
3	STA. 6+50 TO STA. 10+13	363	LEFT MEDIAN CURB ROCK CREEK PKWY.
3	STA. 6+50 TO STA. 10+13	363	RIGHT MEDIAN CURB ROCK CREEK PKWY.
3	STA. 6+50 TO STA. 10+14	364	RIGHT CURB ROCK CREEK PKWY.
	TOTAL QUANTITY	3281	

61501A, ASPHALT CONCRETE SIDEWALK

PLAN SHEET	STATION	S.Y.	DESCRIPTION
2	STA. 1+64 TO STA. 1+85	21	LEFT SIDE ROCK CREEK PKWY.
2	STA. 2+11 TO STA. 6+13	409	LEFT SIDE ROCK CREEK PKWY.
2	STA. 6+42 TO STA. 6+50	8	LEFT SIDE ROCK CREEK PKWY.
3	STA. 6+50 TO STA. 8+73	242	LEFT SIDE ROCK CREEK PKWY.
3	STA. 9+16 TO STA. 11+00	172	LEFT SIDE ROCK CREEK PKWY.
4	STA. 11+00 TO STA. 11+66	65	LEFT SIDE ROCK CREEK PKWY.
4	STA. 12+74 TO STA. 13+46	96	LEFT SIDE ROCK CREEK PKWY.
4	STA. 13+66 TO STA. 16+50	321	LEFT SIDE ROCK CREEK PKWY.
5	STA. 16+50 TO STA. 21+50	454	LEFT SIDE ROCK CREEK PKWY.
6	STA. 21+50 TO STA. 26+50	417	LEFT SIDE ROCK CREEK PKWY.
7	STA. 26+50 TO STA. 31+50	417	LEFT SIDE ROCK CREEK PKWY.
8	STA. 31+50 TO STA. 37+00	436	LEFT SIDE ROCK CREEK PKWY.
9	STA. 37+00 TO STA. 39+60	258	LEFT SIDE ROCK CREEK PKWY.
9	STA. 1+60 'P' ST. RAMP TO STA. 1+68 'P' ST. RAMP	2	ISLAND AREA, LEFT SIDE 'P' ST. RAMP
9	STA. 0+50 'P' ST. RAMP TO STA. 1+57 'P' ST. RAMP	73	RIGHT SIDE 'P' ST. RAMP
9	STA. 41+40 TO STA. 43+40	154	LEFT SIDE ROCK CREEK PKWY.
	TOTAL QUANTITY	3545	

61501B, PORTLAND CEMENT CONCRETE SIDEWALK

PLAN SHEET	STATION	S.Y.	DESCRIPTION
1	STA. 1+00 ACCESS RD. TO STA. 1+95 ACCESS RD.	59	LEFT SIDE ACCESS RD.
2	STA. 0+47 ACCESS RD. TO STA. 1+00 ACCESS RD.	35	LEFT SIDE ACCESS RD.
2	STA. 0+47 ACCESS RD. TO STA. 1+00 ACCESS RD.	92	LEFT SIDE ACCESS RD.
	TOTAL QUANTITY	186	

61505B, PORTLAND CEMENT CONCRETE WHEELCHAIR RAMP

PLAN SHEET	STATION	S.Y.	DESCRIPTION
1	STA. 2+05 ACCESS RD.	12	LEFT CURB ACCESS RD. - DETAIL E615-4
2	STA. 0+40 ACCESS RD.	9	LEFT CURB ACCESS RD. - DETAIL E615-3
2	STA. 0+43 ACCESS RD.	10	RIGHT CURB ACCESS ROAD - DETAIL E615-3
2	STA. 6+15	7.5	WEST CURB 'K' ST. RAMP - DETAIL E615-5
2	STA. 6+37	7.5	EAST CURB 'K' ST. RAMP - DETAIL E615-5
3	STA. 8+73	7.5	EAST CURB 'K' ST. RAMP - DETAIL E615-5
3	STA. 9+12	7.5	WEST CURB 'K' ST. RAMP - DETAIL E615-5
4	STA. 13+52	9	SOUTH CURB PENNSYLVANIA AVE. RAMP - DETAIL E615-5
4	STA. 13+65	9	NORTH CURB PENNSYLVANIA AVE. RAMP - DETAIL E615-5
9	STA. 1+79 'P' ST. RAMP	7	LEFT CURB 'P' ST. RAMP - DETAIL E615-5
9	STA. 1+68 'P' ST. RAMP	6	LEFT CURB 'P' ST. RAMP - DETAIL E615-5
9	STA. 1+58 'P' ST. RAMP	5	LEFT CURB 'P' ST. RAMP - DETAIL E615-5
9	STA. 1+49 'P' ST. RAMP	7	RIGHT CURB 'P' ST. RAMP - DETAIL E615-3
	TOTAL QUANTITY	104	

PLAN SHEET 1 – THOMPSON BOAT CENTER ACCESS ROAD AND PARKING LOT
PLAN SHEET 2 – ROCK CREEK PKWY. FROM STA. 1+29.7 TO STA. 6+50
PLAN SHEET 3 – ROCK CREEK PKWY. FROM STA. 6+50 TO STA. 11+00
PLAN SHEET 4 – ROCK CREEK PKWY. FROM STA. 11+00 TO STA. 16+50
PLAN SHEET 5 – ROCK CREEK PKWY. FROM STA. 16+50 TO STA. 21+50
PLAN SHEET 6 – ROCK CREEK PKWY. FROM STA. 21+50 TO STA. 26+50
PLAN SHEET 7 – ROCK CREEK PKWY. FROM STA. 26+50 TO STA. 31+50
PLAN SHEET 8 – ROCK CREEK PKWY. FROM STA. 31+50 TO STA. 37+00
PLAN SHEET 9 – ROCK CREEK PKWY. FROM STA. 37+00 TO STA. 42+50
AND THE 'P' STREET RAMP

U.S. DEPARTMENT OF TRANSPORTATION
FEDERAL HIGHWAY ADMINISTRATION
EASTERN FEDERAL LANDS HIGHWAY DIVISION
STERLING, VIRGINIA

ROCK CREEK AND POTOMAC PARKWAY

SCHEDULES

61701H, GUARDRAIL SYSTEM STEEL–BACKED TIMBER (TYPE B)

PLAN SHEET	STATION	L.F.	DESCRIPTION
3	STA. 9+37 TO STA. 11+00	158	LEFT CURB ROCK CREEK PKWY.
4	STA. 11+00 TO STA. 11+52	52	LEFT CURB ROCK CREEK PKWY.
4	STA. 13+04 TO STA. 13+54	50	LEFT CURB ROCK CREEK PKWY.
4	STA. 13+70 TO STA. 16+50	290	LEFT CURB ROCK CREEK PKWY.
4	STA. 11+65 TO STA. 12+30	70	RIGHT CURB ROCK CREEK PKWY.
4	STA. 15+72 TO STA. 16+50	78	RIGHT CURB ROCK CREEK PKWY.
5	STA. 16+50 TO STA. 21+50	500	LEFT CURB ROCK CREEK PKWY.
5	STA. 16+50 TO STA. 19+22	272	RIGHT CURB ROCK CREEK PKWY.
6	STA. 21+50 TO STA. 26+50	500	LEFT CURB ROCK CREEK PKWY.
7	STA. 26+50 TO STA. 31+50	500	LEFT CURB ROCK CREEK PKWY.
8	STA. 31+50 TO STA. 37+00	550	LEFT CURB ROCK CREEK PKWY.
9	STA. 37+00 TO STA. 39+52	250	LEFT CURB ROCK CREEK PKWY.
9	STA. 2+00 TO STA. 5+31	330	LEFT CURB 'P' ST. RAMP
9	STA. 1+39 'P' ST. RAMP TO STA. 42+39 PARKWAY	200	RIGHT CURB 'P' ST. RAMP &LEFT CURB PKWY.
	TOTAL QUANTITY	3800	

61706, CONNECTION TO STRUCTURE

PLAN SHEET	STATION	EACH	DESCRIPTION
4	STA. 11+52 TO STA. 11+82	1	LEFT CURB ROCK CREEK PKWY.
4	STA. 12+74 TO STA. 13+04	1	LEFT CURB ROCK CREEK PKWY.
4	STA. 12+30 TO STA. 12+60	1	RIGHT CURB ROCK CREEK PKWY.
4	STA. 15+42 TO STA. 15+72	1	RIGHT CURB ROCK CREEK PKWY.
	TOTAL QUANTITY	4	

62016, RESET STONE MASONRY, (GRANITE COBBLES)

PLAN SHEET	STATION	S.Y.	DESCRIPTION
2	STA. 2+44 TO STA. 6+50	136	MEDIAN ROCK CREEK PKWY.
3	STA. 6+50 TO STA. 10+13	120	MEDIAN ROCK CREEK PKWY.
	TOTAL QUANTITY	256	

63401DA, PAVEMENT MARKINGS, TYPE D SOLID

STRIPING PLAN SHEET	LOCATION	LENGTH FT	DESCRIPTION
3	6+50 TO 11+00	340	4" WIDE DOUBLE YELLOW PAVEMENT MARKING
4	11+00 TO 16+50	1600	4" WIDE DOUBLE YELLOW PAVEMENT MARKING
9	37+00 TO 42+50	1382	4" WIDE DOUBLE YELLOW PAVEMENT MARKING
	TOTAL QUANTITY	3322	

63401DB, PAVEMENT MARKINGS, TYPE D BROKEN (REVERSED)

STRIPING PLAN SHEET	LOCATION	LENGTH FT	DESCRIPTION
4	11+00 TO 16+50	240	4" WIDE DOUBLE BROKEN YELLOW PAVEMENT MARKING (30' LONG, 10' SKIP)
5	16+50 TO 21+50	1000	4" WIDE DOUBLE BROKEN YELLOW PAVEMENT MARKING (30' LONG, 10' SKIP)
6	21+50 TO 26+50	1000	4" WIDE DOUBLE BROKEN YELLOW PAVEMENT MARKING (30' LONG, 10' SKIP)
7	26+50 TO 31+50	1000	4" WIDE DOUBLE BROKEN YELLOW PAVEMENT MARKING (30' LONG, 10' SKIP)
8	31+50 TO 37+00	1100	4" WIDE DOUBLE BROKEN YELLOW PAVEMENT MARKING (30' LONG, 10' SKIP)
9	37+00 TO 42+50	1100	4" WIDE DOUBLE BROKEN YELLOW PAVEMENT MARKING (30' LONG, 10' SKIP)
	TOTAL QUANTITY	5440	

PLAN SHEET 1 – THOMPSON BOAT CENTER ACCESS ROAD AND PARKING LOT
PLAN SHEET 2 – ROCK CREEK PKWY. FROM STA. 1+29.7 TO STA. 6+50
PLAN SHEET 3 – ROCK CREEK PKWY. FROM STA. 6+50 TO STA. 11+00
PLAN SHEET 4 – ROCK CREEK PKWY. FROM STA. 11+00 TO STA. 16+50
PLAN SHEET 5 – ROCK CREEK PKWY. FROM STA. 16+50 TO STA. 21+50
PLAN SHEET 6 – ROCK CREEK PKWY. FROM STA. 21+50 TO STA. 26+50
PLAN SHEET 7 – ROCK CREEK PKWY. FROM STA. 26+50 TO STA. 31+50
PLAN SHEET 8 – ROCK CREEK PKWY. FROM STA. 31+50 TO STA. 37+00
PLAN SHEET 9 – ROCK CREEK PKWY. FROM STA. 37+00 TO STA. 42+50
AND THE 'P' STREET RAMP

U.S. DEPARTMENT OF TRANSPORTATION
FEDERAL HIGHWAY ADMINISTRATION
EASTERN FEDERAL LANDS HIGHWAY DIVISION
STERLING, VIRGINIA

ROCK CREEK AND POTOMAC PARKWAY

SCHEDULES

63401HA, PAVEMENT MARKINGS, TYPE H SOLID

SHEET NO.	LOCATION	LENGTH FT	DESCRIPTION
1	THOMPSON'S BOAT CENTER PARKING LOT	1675	4" WIDE WHITE PAVEMENT MARKING FOR PARKING SPACES AND HANDICAP PARKING
2	ACCESS ROAD (0+44 TO 1+00)	231	CROSSWALK, 12" WIDE PAVEMENT MARKING (WIDTH=12 FT)
		198	24" WIDE WHITE PAVEMENT MARKING
	1+30 TO 6+50	438	CROSSWALK, 12" WIDE PAVEMENT MARKING (WIDTH=12 FT)
		426	CROSSWALK-ON RAMP, 12" WIDE PAVEMENT MARKING (WIDTH=12 FT)
		863	4" WIDE WHITE PAVEMENT MARKING
		820	4" WIDE YELLOW PAVEMENT MARKING
		184	8" WIDE WHITE PAVEMENT MARKING
3	6+50 TO 11+00	978	4" WIDE WHITE PAVEMENT MARKING
		788	4" WIDE YELLOW PAVEMENT MARKING
		663	CROSSWALK-OFF RAMP, 12" WIDE PAVEMENT MARKING (WIDTH=12 FT)
4	11+00 TO 16+50	252	CROSSWALK-OFF RAMP, 12" WIDE PAVEMENT MARKING (WIDTH=12 FT)
		1030	4" WIDE WHITE PAVEMENT MARKING
		606	8" WHITE PAVEMENT MARKING
		90	24" WIDE WHITE PAVEMENT MARKING
5	16+50 TO 21+50	1000	4" WIDE WHITE PAVEMENT MARKING
6	21+50 TO 26+50	1000	4" WIDE WHITE PAVEMENT MARKING
7	26+50 TO 31+50	1000	4" WIDE WHITE PAVEMENT MARKING
8	31+50 TO 37+00	1100	4" WIDE WHITE PAVEMENT MARKING
9	37+00 TO 42+50	1917	4" WIDE WHITE PAVEMENT MARKING
		200	4" WIDE YELLOW PAVEMENT MARKING
		255	CROSSWALK-ON RAMP, 12" WIDE PAVEMENT MARKING (WIDTH=12 FT)
		324	CROSSWALK-OFF RAMP, 12" WIDE PAVEMENT MARKING (WIDTH=12 FT)
		184	8" WIDE WHITE PAVEMENT MARKING
	TOTAL QUANTITY	16222	

63401HB, PAVEMENT MARKINGS, TYPE H BROKEN

SHEET NO.	LOCATION	LENGTH FT	DESCRIPTION
2	1+30 TO 6+50	750	4" WIDE BROKEN WHITE PAVEMENT MARKING (10' LONG, 30' SKIP)
		100	4" WIDE DOTTED WHITE PAVEMENT MARKING (2' LONG, 4' SKIP)
3	6+50 TO 11+00	900	4" WIDE BROKEN WHITE PAVEMENT MARKING (10' LONG, 30' SKIP)
4	11+00 TO 16+50	1100	4" WIDE BROKEN WHITE PAVEMENT MARKING (10' LONG, 30' SKIP)
		170	4" WIDE DOTTED WHITE PAVEMENT MARKING (2' LONG, 4' SKIP)
5	16+50 TO 21+50	1000	4" WIDE BROKEN WHITE PAVEMENT MARKING (10' LONG, 30' SKIP)
6	21+50 TO 26+50	1000	4" WIDE BROKEN WHITE PAVEMENT MARKING (10' LONG, 30' SKIP)
7	26+50 TO 31+50	1000	4" WIDE BROKEN WHITE PAVEMENT MARKING (10' LONG, 30' SKIP)
8	31+50 TO 37+00	1100	4" WIDE BROKEN WHITE PAVEMENT MARKING (10' LONG, 30' SKIP)
9	37+00 TO 42+50	1100	4" WIDE BROKEN WHITE PAVEMENT MARKING (10' LONG, 30' SKIP)
	TOTAL QUANTITY	8220	

63402H, PAVEMENT MARKINGS, TYPE H

SHEET NO.	LOCATION	AREA SQFT	DESCRIPTION
1	STA. 0+57 PARKING LOT - 23' LEFT	16	HANDICAP SYMBOL
1	STA. 0+57 PARKING LOT - 50' LEFT	16	HANDICAP SYMBOL
1	STA. 0+70 PARKING LOT - 23' LEFT	16	HANDICAP SYMBOL
1	STA. 0+73 PARKING LOT - 50' LEFT	16	HANDICAP SYMBOL
	TOTAL QUANTITY	64	

PLAN SHEET 1 - THOMPSON BOAT CENTER ACCESS ROAD AND PARKING LOT
PLAN SHEET 2 - ROCK CREEK PKWY. FROM STA. 1+29.7 TO STA. 6+50
PLAN SHEET 3 - ROCK CREEK PKWY. FROM STA. 6+50 TO STA. 11+00
PLAN SHEET 4 - ROCK CREEK PKWY. FROM STA. 11+00 TO STA. 16+50
PLAN SHEET 5 - ROCK CREEK PKWY. FROM STA. 16+50 TO STA. 21+50
PLAN SHEET 6 - ROCK CREEK PKWY. FROM STA. 21+50 TO STA. 26+50
PLAN SHEET 7 - ROCK CREEK PKWY. FROM STA. 26+50 TO STA. 31+50
PLAN SHEET 8 - ROCK CREEK PKWY. FROM STA. 31+50 TO STA. 37+00
PLAN SHEET 9 - ROCK CREEK PKWY. FROM STA. 37+00 TO STA. 42+50
AND THE 'P' STREET RAMP

U.S. DEPARTMENT OF TRANSPORTATION
FEDERAL HIGHWAY ADMINISTRATION
EASTERN FEDERAL LANDS HIGHWAY DIVISION
STERLING, VIRGINIA

ROCK CREEK AND POTOMAC PARKWAY

SCHEDULES

NPS	REG	STATE	PROJECT	SHEET NO.	TOTAL SHEETS
GW 2006	NC	DC	PRA-ROCR 3A6,204B	19	130

Struct. No.	Sheet No	Approximate Location	Item 20301F Removal of Inlets (each)	Item 60201J 15" Pipe Culvert (lnft)	Item 60403FAF Inlet Type 6A-6 (each)	Item 60403FAFA Inlet, Type 6A-6 Double (each)	Item 60404B Catch Basin Type 2	Item 60405 Adjust Manhole (each)	Item 60413 Concrete Inlet Tops (each)	Item 60414FAF Metal Grate Type 6A-6 (each)	Item 60501 Underdrain System (lnft)	Item 60710 Cleaning Drainage Structures (each)			Remarks
Ex I-3	35	2+49.5 Lt.								1		1			Replace Grate
Ex I-4	35	2+49.8 Rt.								1		1			Replace Grate
Ex I-5	35	2+23.1 Rt.	1												Remove Existing Inlet
Ex I-6	35	1+16.2 Rt.	1												Remove Existing Inlet
I-8	35	2+23.1 Rt.					1								See Sheet 110 for Details and Elevations
I-9	35	1+16.2 Rt.					1								See Sheet 110 for Details and Elevations
I-1	36	2+54.4 Lt.			1										Median
		to		30											
I-2	36	2+16.4 Rt.			1										
		to		94											
Ex I-35	36	1+50.0 Rt.										1			Existing 10' COG in Virginia Ave.
Ex I-7	36	2+11.3 Lt.								1		1			Replace Grate
Ex I-8	37	6+57.6 Lt.										1			No Change
Ex I-9	37	6+74.7 Lt.										1			No Change
Ex I-10	37	7+10.0 Lt.							1			1			Sump - Replace Concrete Inlet Top
Ex I-11	37	7+24.7 Rt.							1			1			Sump - Replace Concrete Inlet Top
Ex I-12	37	8+20.4 Lt.							1			1			Sump - Replace Concrete Inlet Top
Ex I-13	37	8+40.5 Rt.							1			1			Sump - Replace Concrete Inlet Top
Ex I-14	37	8+86.4 Lt.										1			No Change
Ex I-15	37	8+93.5 Lt.										1			No Change
Ex I-16	37	10+13.8 Rt.								1		1			Replace Grate
Ex I-17	37	10+61.8 Rt.								1		1			Replace Grate
Ex I-18	38	14+94.4 Rt.										1			@ Bridge, No Change
I-4	38	15+34.4 Lt.				1									
		to		130											
Ex I-20	39	16+72.1 Lt.								2		1			Sump - Replace Grates
		to		125											
I-5	39	17+97.8 Lt.				1									
Ex I-19	39	16+71.9 Rt.								2		1			Replace Grates
Ex I-21	39	19+08.5 Rt.								1		1			Replace Grate
Ex I-22	39	19+11.1 Lt.	1												Remove Existing Inlet
I-7	39	19+10.4 Lt.				1									
Ex I-23	39	20+99.7 Rt.								1		1			Replace Grate
Ex I-24	39	21+02.2 Lt.	1			1									Remove Ex Single & Replace w/Double 6A-6
		to		153											
I-3	40	22+53.2 Lt.				1									
I-6	40	25+99.6 Lt.				1									
		to		159											
Ex I-26	41	27+59.6 Lt.								2		1			Replace Grates
Ex I-25	41	27+58.4 Rt.										1			No Change
Ex I-27	41	29+76.1 Rt.								2		1			Replace Grates
Ex I-28	41	31+46.5 Rt.										1			No Change
Ex I-29	43	39+37.3 Lt.								2		1			Replace Grates
Ex I-30	43	39+36.2 Lt.								2		1			Replace Grates
Ex I-31	43	40+38.8 Lt.								2		1			Replace Grates
Ex I-32	43	40+85.5 Lt.								2		1			Replace Grates
Ex I-33	43	41+20.4 Lt.										1			No Change
Ex I-34	43	42+18.1 Lt.								2		1			Replace Grates
Ex S.S.M.H.	37	6+82.5 Rt.						1							
Ex S.S.M.H.	37	8+14.1 Lt.						1							
Ex S.S.M.H.	37	8+34.8 Rt.						1							
Ex S.S.M.H.	37	9+05.9 Rt.						1							
Ex S.S.M.H.	37	9+06.4 Lt.						1							
Ex S.S.M.H.	37	9+75.6 Rt.						1							
Ex S.S.M.H.	39	21+40.0 Lt.						1							
Ex S.S.M.H.	40	21+55.0 Lt.						1							
UNDER DRAIN	40	26+00.0 26+50.0 Lt.									50				
UNDER DRAIN	41	26+50.0 29+70.0 Lt.									320				
TOTALS			4	691	2	6	2	8	4	26	370	29			

U.S. DEPARTMENT OF TRANSPORTATION
FEDERAL HIGHWAY ADMINISTRATION
EASTERN FEDERAL LANDS HIGHWAY DIVISION
STERLING, VIRGINIA

ROCK CREEK AND POTOMAC PARKWAY

DRAINAGE SUMMARY

NPS	REG	STATE	PROJECT	SHEET NO.	TOTAL SHEETS
821 / 41920	NC	DC	PRA-ROCR 3A5,204(1)	20	139

Struct. No.	Sheet No	Approximate Location	Item 60705H 12" Pipe Liner (lnft)	Item 60705J 15" Pipe Liner (lnft)	Item 60705K 18" Pipe Liner (lnft)	Item 60705M 24" Pipe Liner (lnft)	Item 60703 Cleaning Culvert in Place (lnft)										Remarks
Ex	39	16+70.0		44	34		78										Existing 15" and 18" Drain
Ex	39	19+10.0	40	30			70										Existing 12" and 15" Drain
Ex	39	21+00.0	43	40			83										Existing 12" and 15" Drain
Ex	41	27+61.0		95			95										Existing 15" Drain
Ex	41	29+75.0		80			80										Existing 15" Drain
Ex	41	31+46.0		50			50										Existing 15" Drain
Ex	43	39+23.5 BL			104		104										Existing 18" Drain
Ex		39+36.0															
to Ex	43	39+37.2		59			59										Existing 15" Drain
Ex	43	40+44.5 BL				141	141										Existing 24" Drain
Ex		40+38.8															
to Ex	43	40+86.5		45			45										Existing 15" Drain
Ex		40+89.5															
to Ex	43	41+19.7		33			33										Existing 15" Drain
Ex		40+89.6															
to Ex	43	42+15.4		115			115										Existing 15" Drain
TOTALS			83	591	138	141	953										

U.S. DEPARTMENT OF TRANSPORTATION
FEDERAL HIGHWAY ADMINISTRATION
EASTERN FEDERAL LANDS HIGHWAY DIVISION
STERLING, VIRGINIA

ROCK CREEK AND POTOMAC PARKWAY

DRAINAGE SUMMARY

NPS	REG	STATE	PROJECT	SHEET NO.	TOTAL SHEETS
821 41920	NC	DC	PRA-ROCR 3A5. 204(1)	21	139

Sign No.	Text No.	Sign Text	LOCATION		PANEL SIZE						TEXT SIZE				Color Combination	Quantity	Total Area (sq ft)	Remarks
			Station	Side	Width (in.)	Height (in.)	Area (sq ft)	Corner Radii (in.)	Border Width (in.)	Margin Width (in.)	Numbers (in.)	Upper Case (in.)	Lower Case (in.)	Series				
1.	W21-1A		See Note 4		36	36	9	See Note 1							Black on Orange	2	18	
2.	G95-2	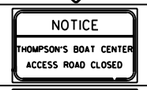	See Note 4		132	78	71.5	10	3	-	-	See Remarks	-	-	Black on Orange	3	215	• The word "NOTICE" is 10 inches in height. • The phrase "THOMPSON'S BOAT CENTER" is 6 inches in height. • The phrase "ACCESS ROAD CLOSED" is 6 inches in height.
3.	G95-2	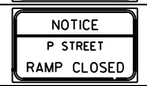	See Note 4		132	78	71.5	10	3	-	-	See Remarks	-	-	Black on Orange	2	143	• The word "NOTICE" is 10 inches in height. • The phrase "P STREET" is 8 inches in height. • The phrase "RAMP CLOSED" is 10 inches in height.
4.	R11-2		See Note 4		48	30	10	See Note 1							Black on White	3	30	
5.	G20-2A		See Note 4		48	24	8	See Note 1							Black on Orange	7	56	
6.	W20-1		See Note 4		48	48	16	See Note 1							Black on Orange	5	80	
7.	R1-1		See Note 4		30	30	6.25	See Note 1							White on Red	4	25	
8.	W5-4		See Note 4		36	36	9	See Note 1							Black on Orange	3	27	
9.	W20-1		See Note 4		48	48	16	See Note 1							Black on Orange	2	32	
10.	W4-2(R)		See Note 4		36	36	9	See Note 1							Black on Orange	2	18	
11.	W20-5(1)R		See Note 4		48	48	16	See Note 1							Black on Orange	1	16	
12.	W20-5(1)R		See Note 4		48	48	16	See Note 1							Black on Orange	1	16	
13.	W20-1		See Note 4		48	48	16	See Note 1							Black on Orange	4	64	
14.	OM-3L		See Note 4		12	36	3	See Note 1							Orange on White	2	6	
15.	OM-3R		See Note 4		12	36	3	See Note 1							Orange on White	2	6	
16.	W4-1R	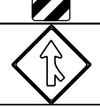	See Note 4		30	30	6.25	See Note 1							Black on Yellow	1	6.25	

Notes:

1. Construct and erect all construction signs in accordance with the Manual on Uniform Traffic Control Devices (MUTCD), latest edition.
2. Final location of signs may be changed to fit field conditions as approved by the CO.
3. See Detail E635-1 for construction sign mounting.
4. See Construction Traffic Control Plans and /or Construction Traffic Control Details for location.

U.S. DEPARTMENT OF TRANSPORTATION
FEDERAL HIGHWAY ADMINISTRATION
EASTERN FEDERAL LANDS HIGHWAY DIVISION
STERLING, VIRGINIA

CONSTRUCTION SIGNS SCHEDULE

Sheet 1 of 3

NPS	REG	STATE	PROJECT	SHEET NO.	TOTAL SHEETS
821 41920	NC	DC	PRA-ROCR 3A5. 204(1)	22	139

Sign No.	Text No.	Sign Text	LOCATION		PANEL SIZE						TEXT SIZE				Color Combination	Quantity	Total Area (sq ft)	Remarks
			Station	Side	Width (in.)	Height (in.)	Area (sq ft)	Corner Radii (in.)	Border Width (in.)	Margin Width (in.)	Numbers (in.)	Upper Case (in.)	Lower Case (in.)	Series				
17.	W13-4	ON RAMP	See Note 4		24	30	5	See Note 1							Black on Orange	3	15	
18.	W13-1	15 M.P.H.	See Note 4		24	24	4	See Note 1							Black on Orange	3	12	
19.	W13-1	25 M.P.H.	See Note 4		24	24	4	See Note 1							Black on Orange	5	20	
20.	W4-2(L)		See Note 4		36	36	9	See Note 1							Black on Orange	3	27	
21.	W20-5(1)L	LEFT LANE CLOSED 1000 FT	See Note 4		48	48	16	See Note 1							Black on Orange	2	32	
22.	W20-5(1)L	LEFT LANE CLOSED 1500 FT	See Note 4		48	48	16	See Note 1							Black on Orange	2	32	
23.	R3-8	ONLY	See Note 4		30	30	6.25	See Note 1							Black on White	1	6.25	
24.	VP-1R		See Note 4		12	36	3	See Note 1							Orange on White	1	3	These signs are being paid for under item 63520-Vertical panels per each.
25.	VP-1L		See Note 4		12	36	3	See Note 1							Orange on White	2	6	These signs are being paid for under item 63520-Vertical panels per each.
26.	R3-1		See Note 4		24	24	4	See Note 1							Black Red on White	1	4	
27.	R3-2		See Note 4		24	24	4	See Note 1							Black Red on White	1	4	
28.	W1-4L		See Note 4		30	30	6.25	See Note 1							Black on Yellow	1	6.25	
29.	W1-4R		See Note 4		30	30	6.25	See Note 1							Black on Yellow	1	6.25	
30.	E5-1	EXIT	See Note 4		60	48	20	See Note 1							White on Green	2	40	
31.	E5-2	EXIT OPEN	See Note 4		48	36	12	See Note 1							Black on Orange	2	24	

Notes:

1. Construct and erect all construction signs in accordance with the Manual on Uniform Traffic Control Devices (MUTCD), latest edition.
2. Final location of signs may be changed to fit field conditions as approved by the CO.
3. See Detail E635-1 for construction sign mounting.
4. See Construction Traffic Control Plans and /or Construction Traffic Control Details for location.

U.S. DEPARTMENT OF TRANSPORTATION
FEDERAL HIGHWAY ADMINISTRATION
EASTERN FEDERAL LANDS HIGHWAY DIVISION
STERLING, VIRGINIA

CONSTRUCTION SIGNS SCHEDULE

NPS	REG	STATE	PROJECT	SHEET NO.	TOTAL SHEETS
821 41920	NC	DC	PRA-ROCR 3A5, 204(1)	23	139

Sign No.	Text No.	Sign Text	LOCATION Station	LOCATION Side	PANEL SIZE Width (in.)	PANEL SIZE Height (in.)	PANEL SIZE Area (sq ft)	PANEL SIZE Corner Radii (in.)	PANEL SIZE Border Width (in.)	PANEL SIZE Margin Width (in.)	TEXT SIZE Numbers (in.)	TEXT SIZE Upper Case (in.)	TEXT SIZE Lower Case (in.)	TEXT SIZE Series	Color Combination	Quantity	Total Area (sq ft)	Remarks
32.	R11-2	TRAIL CLOSED	See Note 4		24	18	3	See Note 1							Black on White	4	12	
33.	M4-10L	DETOUR	See Note 4		24	9	1.5	See Note 1							Black Orange on Black	1	1.5	
34.	M4-10R	DETOUR	See Note 4		24	9	1.5	See Note 1							Black Orange on Black	2	3	
35.	M4-9c	DETOUR	See Note 4		30	24	5	See Note 1							Black on Orange	9	45	
36.	M4-9cL	DETOUR	See Note 4		30	24	5	See Note 1							Black on Orange	4	20	
37.	M4-9cR	DETOUR	See Note 4		30	24	5	See Note 1							Black on Orange	6	30	
38.	M4-8A	END DETOUR	See Note 4		24	18	3	See Note 1							Black on Orange	2	6	
39.	W16-1	SHARE THE ROAD	See Note 4		15	30	3.13	See Note 1							Black on Orange	4	13	
40.	W11-1		See Note 4		30	30	6.25	See Note 1							Black on Orange	4	25	
41.	W8-3	PAVEMENT ENDS	See Note 4		30	30	6.25	See Note 1							Black on Orange	4	25	
42.	M4-9aL	DETOUR	See Note 4		30	24	5	See Note 1							Black on Orange	3	15	
43.	M4-9aR	DETOUR	See Note 4		30	24	5	See Note 1							Black on Orange	5	25	
															TOTAL	122	1217	

Notes;

1. Construct and erect all construction signs in accordance with the Manual on Uniform Traffic Control Devices (MUTCD), latest edition.
2. Final location of signs may be changed to fit field conditions as approved by the CO.
3. See Detail E635-1 for construction sign mounting.
4. See Construction Traffic Control Plans and /or Construction Traffic Control Details for location.

U.S. DEPARTMENT OF TRANSPORTATION
FEDERAL HIGHWAY ADMINISTRATION
EASTERN FEDERAL LANDS HIGHWAY DIVISION
STERLING, VIRGINIA

CONSTRUCTION SIGNS SCHEDULE

Sheet 3 of 3

9/7/2006 2:24:57 PM M:\Projects\rocr\3a5_204\proj_dev\Cadd\REVISED_ssl0consignsch3.dgn

NPS	REG	STATE	PROJECT	SHEET NO.	TOTAL SHEETS
821 / 41920	NC	DC	PRA-ROCR 3A5. 204(1)	24	139

Sign No.	Text No.	Sign Text	LOCATION		PANEL SIZE						TEXT SIZE				Color Combination	Quantity	Total Area (sq ft)	Remarks
			Station	Side	Width (in.)	Height (in.)	Area (sq ft)	Corner Radii (in.)	Border Width (in.)	Margin Width (in.)	Numbers (in.)	Upper Case (in.)	Lower Case (in.)	Series				
1.	R1-1		See Note 4		18	18	2.25	See Note 1							White on Red	2	4.5	
2.	R7-8		See Note 4		12	18	1.5	See Note 1							Green & Blue on White	4	6	
3.	W3-1a		See Note 4		36	36	9	See Note 1							Black on Yellow	1	9	
4.	W11-2		See Note 4		30	30	6.25	See Note 1							Fluorescent Yellow-Green	10	62.5	
5.	W16-7P-L		See Note 4		24	12	2	See Note 1							Fluorescent Yellow-Green	5	10	
6.	W16-7P-R		See Note 4		24	12	2	See Note 1							Fluorescent Yellow-Green	5	10	
7.	R7-8B		See Note 4		18	9	1.13	See Note 1							White on Blue	4	4.5	
															TOTAL	31	107	

Notes:

1. Construct and erect all construction signs in accordance with the Manual on Uniform Traffic Control Devices (MUTCD), latest edition.
2. Final location of signs may be changed to fit field conditions as approved by the CO.
3. See Detail E633-1 for permanent sign mounting.
4. See Construction Traffic Control Plans and /or Signing and Striping Plans for location.

U.S. DEPARTMENT OF TRANSPORTATION
FEDERAL HIGHWAY ADMINISTRATION
EASTERN FEDERAL LANDS HIGHWAY DIVISION
STERLING, VIRGINIA

PERMANENT SIGNS SCHEDULE

Sheet 1 of 1

NPS	REG	STATE	PROJECT	SHEET NO.	TOTAL SHEETS
821 41920	NC	DC	PRA-ROCR 3A5.204(1)	25	139

63609A – POLES, TYPE A (30 FOOT STEEL)

POLE NUMBER	SHEET NUMBER	LOCATION	OFFSET
L2-1	L-2	2+67	37.0 LT
L2-2	L-2	4+40	31.0 LT
L2-3	L-2	3+53	28.0 RT
L2-4	L-2	5+41	27.0 RT
L3-1	L-3	6+71	26.0 LT
L3-2	L-3	8+70	29.0 LT
L3-3	L-3	10+33	47.0 RT
L4-1	L-4	11+25	94.0 RT
L4-2	L-4	12+10	36.0 RT
L4-3	L-4	13+73	29.0 RT
L4-4	L-4	14+14	48.0 LT
L5-1	L-5	16+59	29.0 LT
L5-2	L-5	17+37	28.0 RT
L5-3	L-5	18+95	25.0 LT
L5-4	L-5	19+89	26.0 RT
L5-5	L-5	21+18	32.0 LT
L6-1	L-6	21+90	26.0 RT
L6-2	L-6	23+37	27.0 LT
L6-3	L-6	23+91	25.0 RT
L6-4	L-6	25+39	28.0 LT
L6-5	L-6	25+91	25.0 RT
L7-1	L-7	27+20	29.0 LT
L7-2	L-7	27+91	27.0 RT
L7-3	L-7	29+27	29.0 LT
L7-4	L-7	30+22	27.0 RT
L8-1	L-8	32+01	30.0 LT
L8-2	L-8	33+40	27.0 RT
L8-3	L-8	34+93	26.0 RT
L8-4	L-8	36+59	27.0 RT
L9-1	L-9	37+52	28.0 LT
L9-2	L-9	38+49	27.0 RT
L9-3	L-9	39+29	40.0 LT
L9-4	L-9	40+32	30.0 RT
L9-5	L-9	41+22	30.0 RT
L9-6	L-9	0+43	24.0 RT
L9-7	L-9	42+20	29.0 RT
L9-8	L-9	3+04	20.6 LT
L9-9	L-9	4+52	20.6 LT

63609F – POLES, TYPE WASHINGTON GLOBE, NO. 14

POLE NUMBER	SHEET NUMBER	LOCATION	OFFSET
L1-1	L-1	2+50	9.0 RT
L1-2	L-1	0+87	68.0 LT
L1-3	L-1	1+57	68.0 LT
L1-4	L-1	2+29	68.0 LT
L1-5	L-1	0+19	11.0 LT
L1-6	L-1	0+88	69.0 RT
L1-7	L-1	1+62	69.0 RT
L1-8	L-1	2+34	69.0 RT

63614 – JUNCTION BOXES

JUNCTION BOX	SHEET NUMBER	LOCATION	OFFSET
JB1-1	L-1	2+50	15.0 RT
JB1-2	L-1	0+77	70.0 LT
JB1-3	L-1	1+53	70.0 LT
JB1-4	L-1	2+26	70.0 LT
JB1-5	L-1	1+80	14.0 LT
JB1-6	L-1	0+83	70.0 RT
JB1-7	L-1	1+68	70.0 RT
JB1-8	L-1	2+36	70.0 RT

63621 – MANHOLE, ELECTRICAL (3'x3')

MANHOLE	SHEET NUMBER	LOCATION	OFFSET
M1-1	L-1	2+57	11.5 RT
M1-2	L-1	2+29	11.5 RT
M1-3	L-1	1+21	35.5 RT
M2-1	L-2	5+88	52.4 LT
M4-1	L-4	11+37	36.0 RT
M4-2	L-4	11+86	36.0 RT
M9-1	L-9	0+73	5.0 LT
M9-2	L-9	0+70	21.0 RT

U.S. DEPARTMENT OF TRANSPORTATION
FEDERAL HIGHWAY ADMINISTRATION
EASTERN FEDERAL LANDS HIGHWAY DIVISION
STERLING, VIRGINIA

ROCK CREEK PARKWAY
STREET LIGHT POLE, MANHOLE
AND JUNCTION BOX SCHEDULE

NPS	REG	STATE	PROJECT	SHEET NO.	TOTAL SHEETS
821 41920	NC	DC	PRA-ROCR 3A5.204(1)	26	139

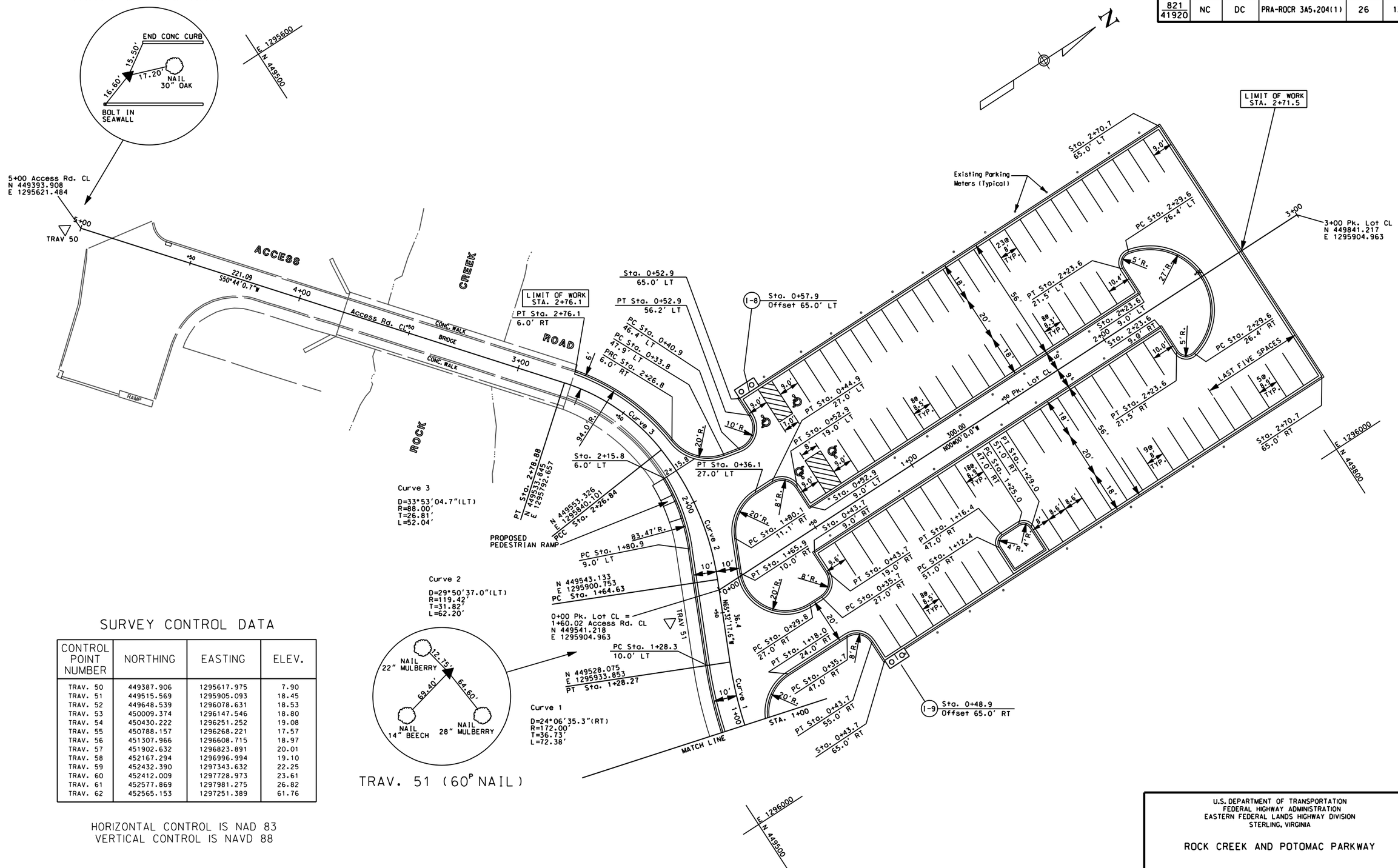

SURVEY CONTROL DATA

CONTROL POINT NUMBER	NORTHING	EASTING	ELEV.
TRAV. 50	449387.906	1295617.975	7.90
TRAV. 51	449515.569	1295905.093	18.45
TRAV. 52	449648.539	1296078.631	18.53
TRAV. 53	450009.374	1296147.546	18.80
TRAV. 54	450430.222	1296251.252	19.08
TRAV. 55	450788.157	1296268.221	17.57
TRAV. 56	451307.966	1296608.715	18.97
TRAV. 57	451902.632	1296823.891	20.01
TRAV. 58	452167.294	1296996.994	19.10
TRAV. 59	452432.390	1297343.632	22.25
TRAV. 60	452412.009	1297728.973	23.61
TRAV. 61	452577.869	1297981.275	26.82
TRAV. 62	452565.153	1297251.389	61.76

HORIZONTAL CONTROL IS NAD 83
VERTICAL CONTROL IS NAVD 88

U.S. DEPARTMENT OF TRANSPORTATION
FEDERAL HIGHWAY ADMINISTRATION
EASTERN FEDERAL LANDS HIGHWAY DIVISION
STERLING, VIRGINIA

ROCK CREEK AND POTOMAC PARKWAY

THOMPSON'S BOAT CENTER ACCESS ROAD AND PARKING LOT GEOMETRY AND LAYOUT PLAN

NPS	REG	STATE	PROJECT	SHEET NO.	TOTAL SHEETS
821 41920	NC	DC	PRA-ROCR 3A5.204(1)	27	139

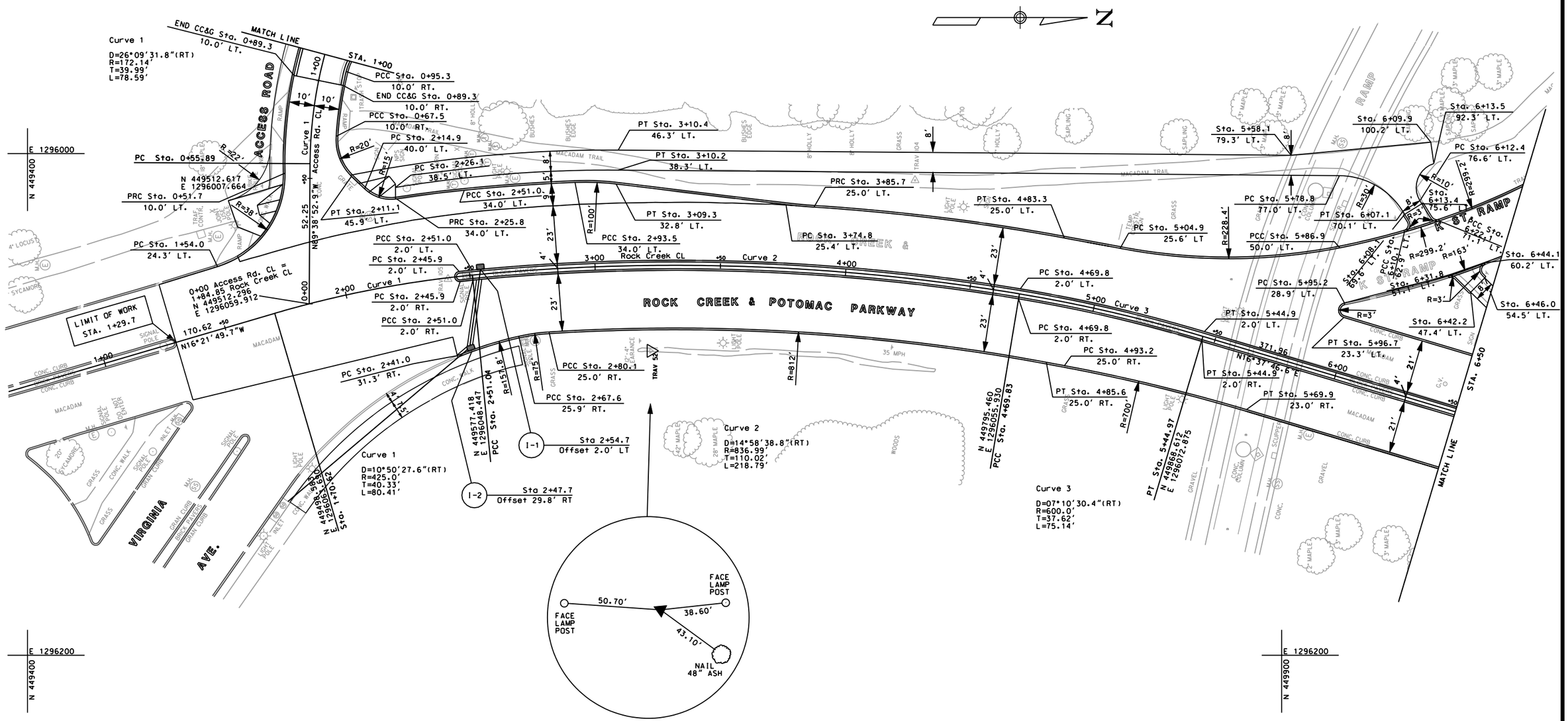

U.S. DEPARTMENT OF TRANSPORTATION
FEDERAL HIGHWAY ADMINISTRATION
EASTERN FEDERAL LANDS HIGHWAY DIVISION
STERLING, VIRGINIA

ROCK CREEK AND POTOMAC PARKWAY

ROCK CREEK & POTOMAC PARKWAY
VIRGINIA AVE. TO STA. 6+50
GEOMETRY AND LOCATION PLAN

NPS	REG	STATE	PROJECT	SHEET NO.	TOTAL SHEETS
821 41920	NC	DC	PRA-ROCR 3A5, 204(1)	28	139

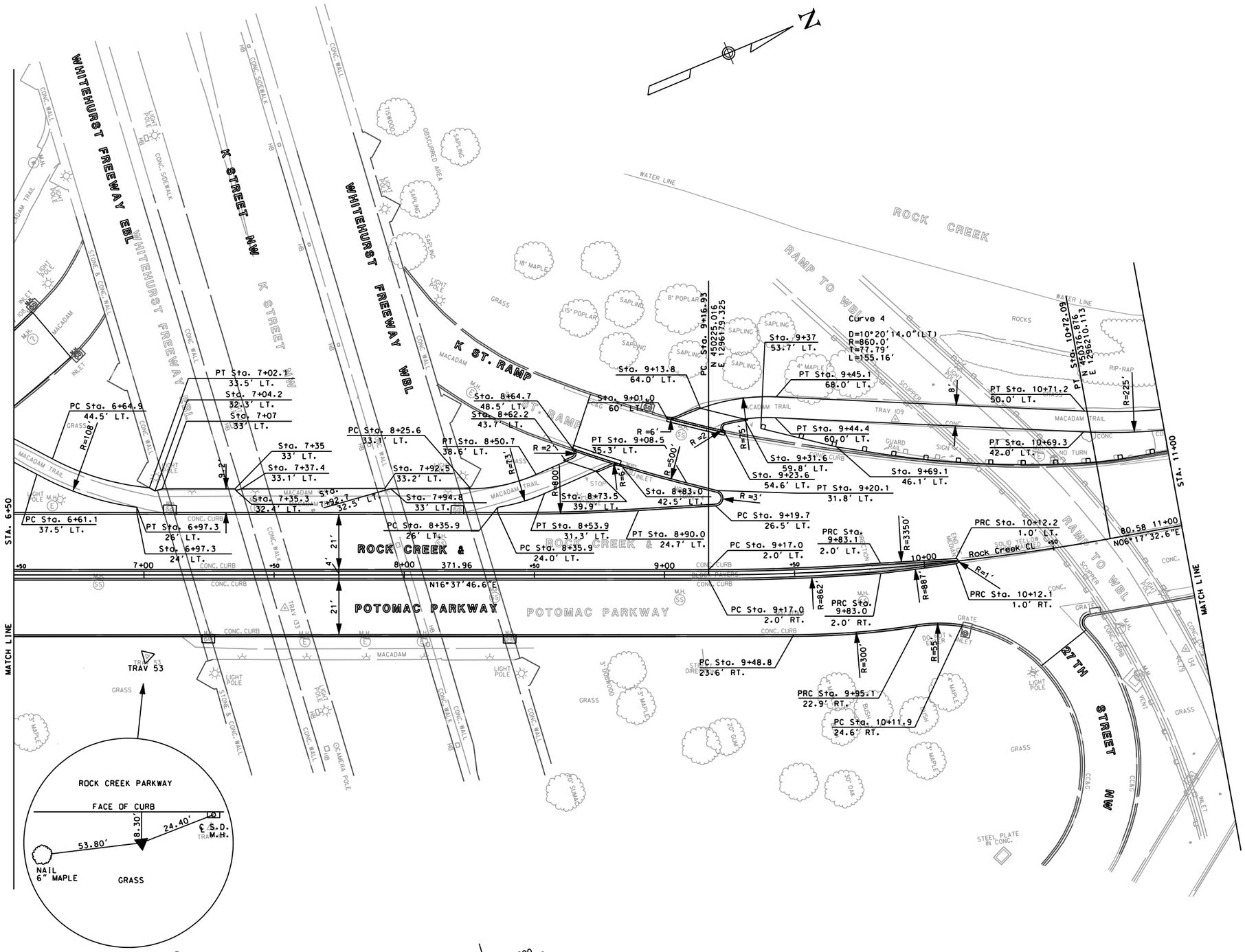

U.S. DEPARTMENT OF TRANSPORTATION
FEDERAL HIGHWAY ADMINISTRATION
EASTERN FEDERAL LANDS HIGHWAY DIVISION
STERLING, VIRGINIA

ROCK CREEK AND POTOMAC PARKWAY

ROCK CREEK & POTOMAC PARKWAY
STA. 6+50 TO STA. 11+00
GEOMETRY AND LOCATION PLAN

NPS	REG	STATE	PROJECT	SHEET NO.	TOTAL SHEETS
821 / 41920	NC	DC	PRA-ROCR 3A5.204(1)	29	139

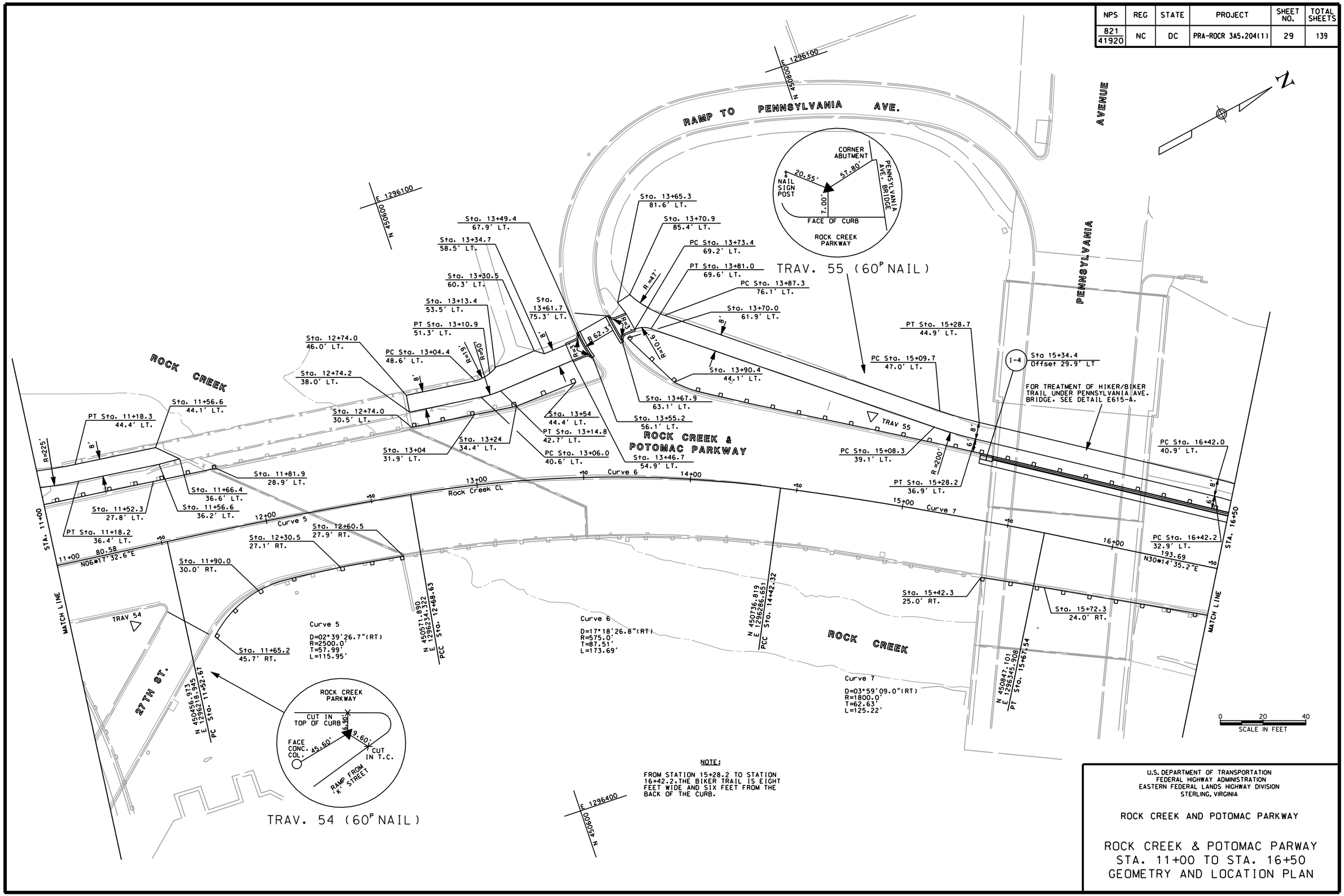

NOTE:

FROM STATION 15+28.2 TO STATION 16+42.2.THE BIKER TRAIL IS EIGHT FEET WIDE AND SIX FEET FROM THE BACK OF THE CURB.

U.S. DEPARTMENT OF TRANSPORTATION
FEDERAL HIGHWAY ADMINISTRATION
EASTERN FEDERAL LANDS HIGHWAY DIVISION
STERLING, VIRGINIA

ROCK CREEK AND POTOMAC PARKWAY

ROCK CREEK & POTOMAC PARWAY
STA. 11+00 TO STA. 16+50
GEOMETRY AND LOCATION PLAN

NPS	REG	STATE	PROJECT	SHEET NO.	TOTAL SHEETS
821 41920	NC	DC	PRA-ROCR 3A5.204(1)	30	139

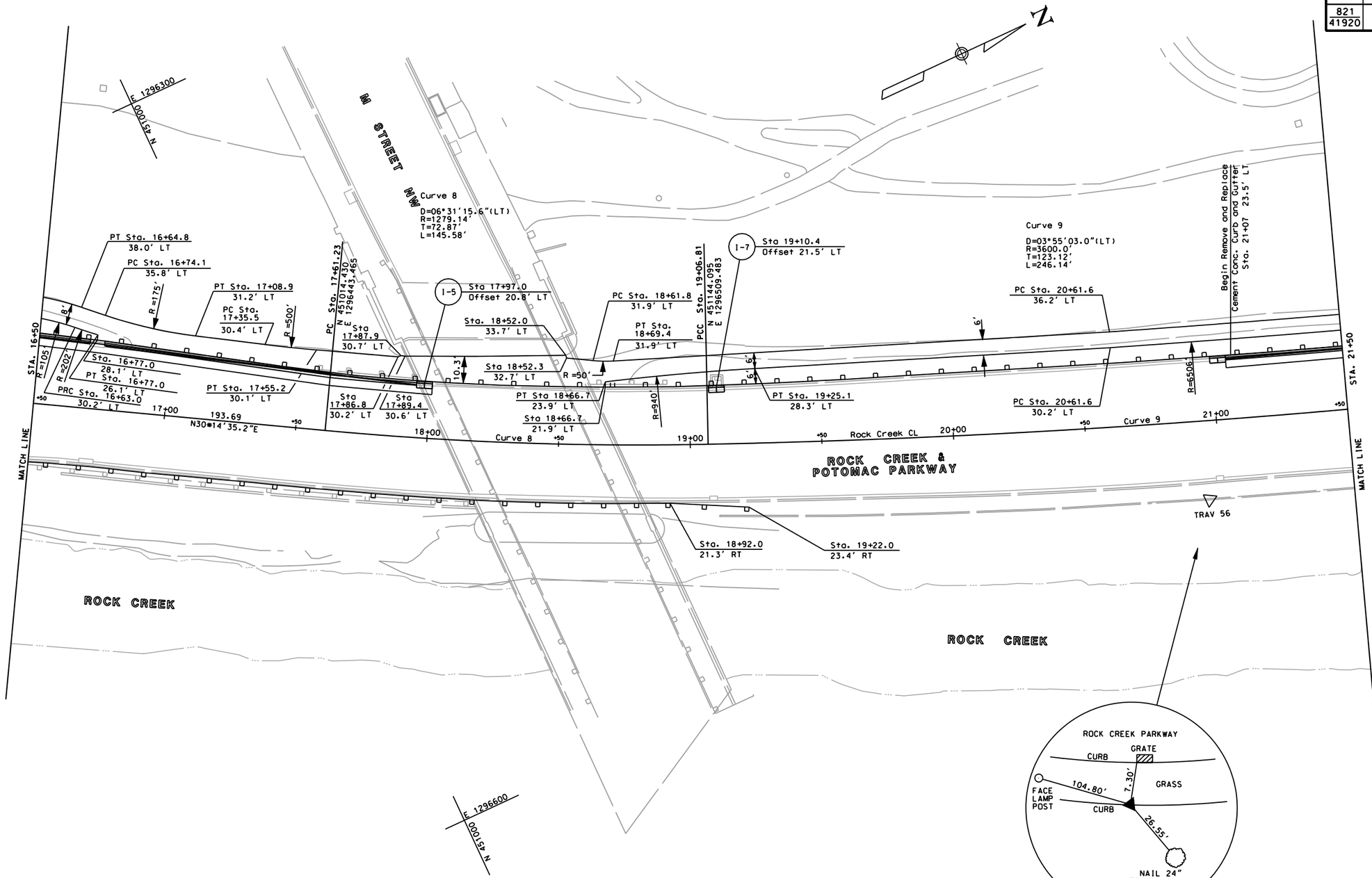

TRAV 56 (SCRIBE IN CONC.)

NOTE

FROM STATION 19+25.1 TO STATION 21+50.THE BIKER TRAIL IS SIX FEET WIDE AND SIX FEET FROM THE BACK OF THE CURB.

0 20 40
SCALE IN FEET

U.S. DEPARTMENT OF TRANSPORTATION
FEDERAL HIGHWAY ADMINISTRATION
EASTERN FEDERAL LANDS HIGHWAY DIVISION
STERLING, VIRGINIA

ROCK CREEK AND POTOMAC PARKWAY

ROCK CREEK & POTOMAC PARKWAY
STA. 16+50 TO STA. 21+50
GEOMETRY AND LOCATION PLAN

NPS	REG	STATE	PROJECT	SHEET NO.	TOTAL SHEETS
821 / 41920	NC	DC	PRA-ROCR 3A5.204(1)	31	139

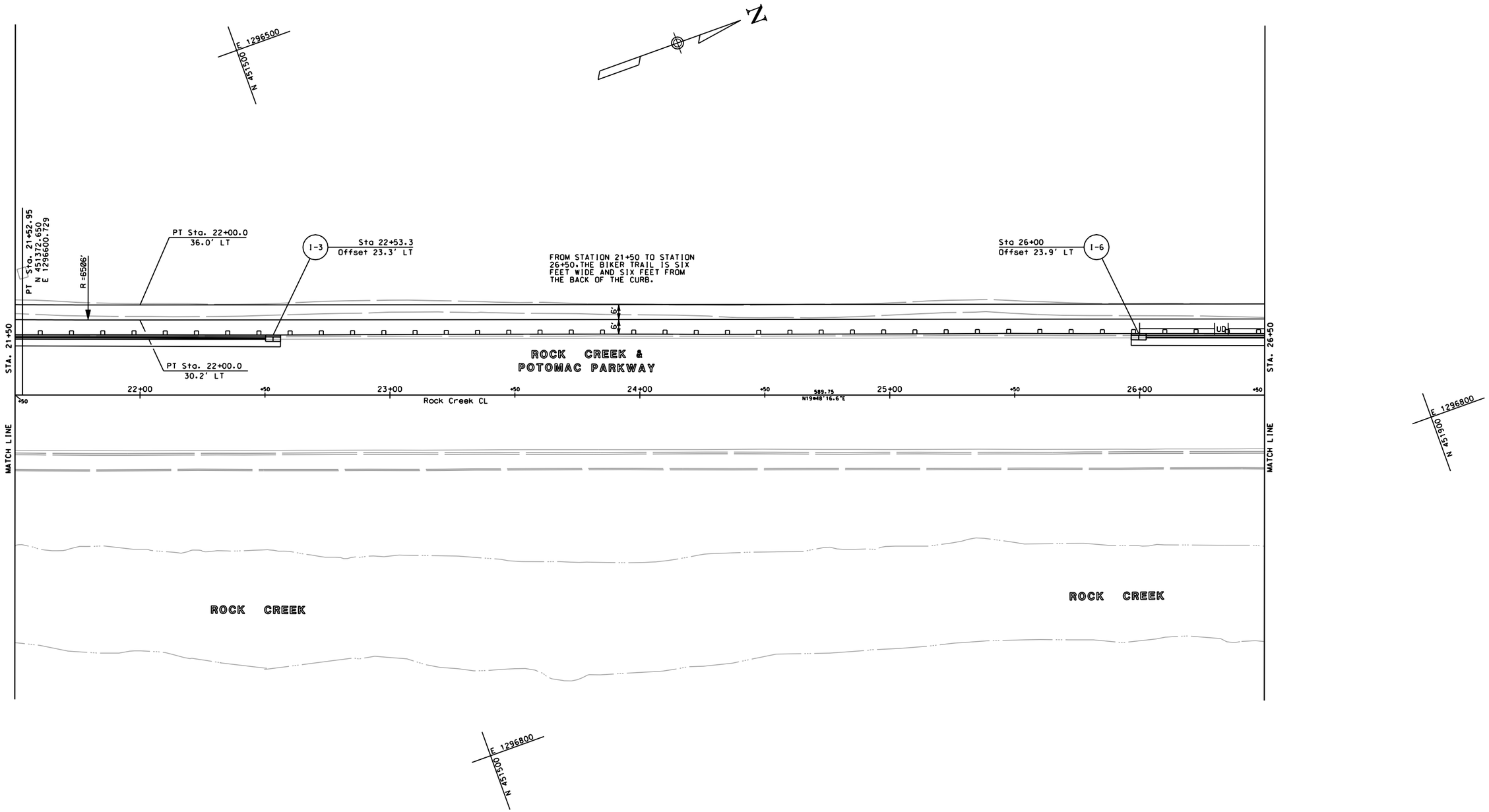

0 20 40
SCALE IN FEET

U.S. DEPARTMENT OF TRANSPORTATION
FEDERAL HIGHWAY ADMINISTRATION
EASTERN FEDERAL LANDS HIGHWAY DIVISION
STERLING, VIRGINIA

ROCK CREEK AND POTOMAC PARKWAY

ROCK CREEK & POTOMAC PARKWAY
STA. 21+50 TO STA. 26+50
GEOMETRY AND LOCATION PLAN

NPS	REG	STATE	PROJECT	SHEET NO.	TOTAL SHEETS
821 / 41920	NC	DC	PRA-ROCR 3A5.204(1)	32	139

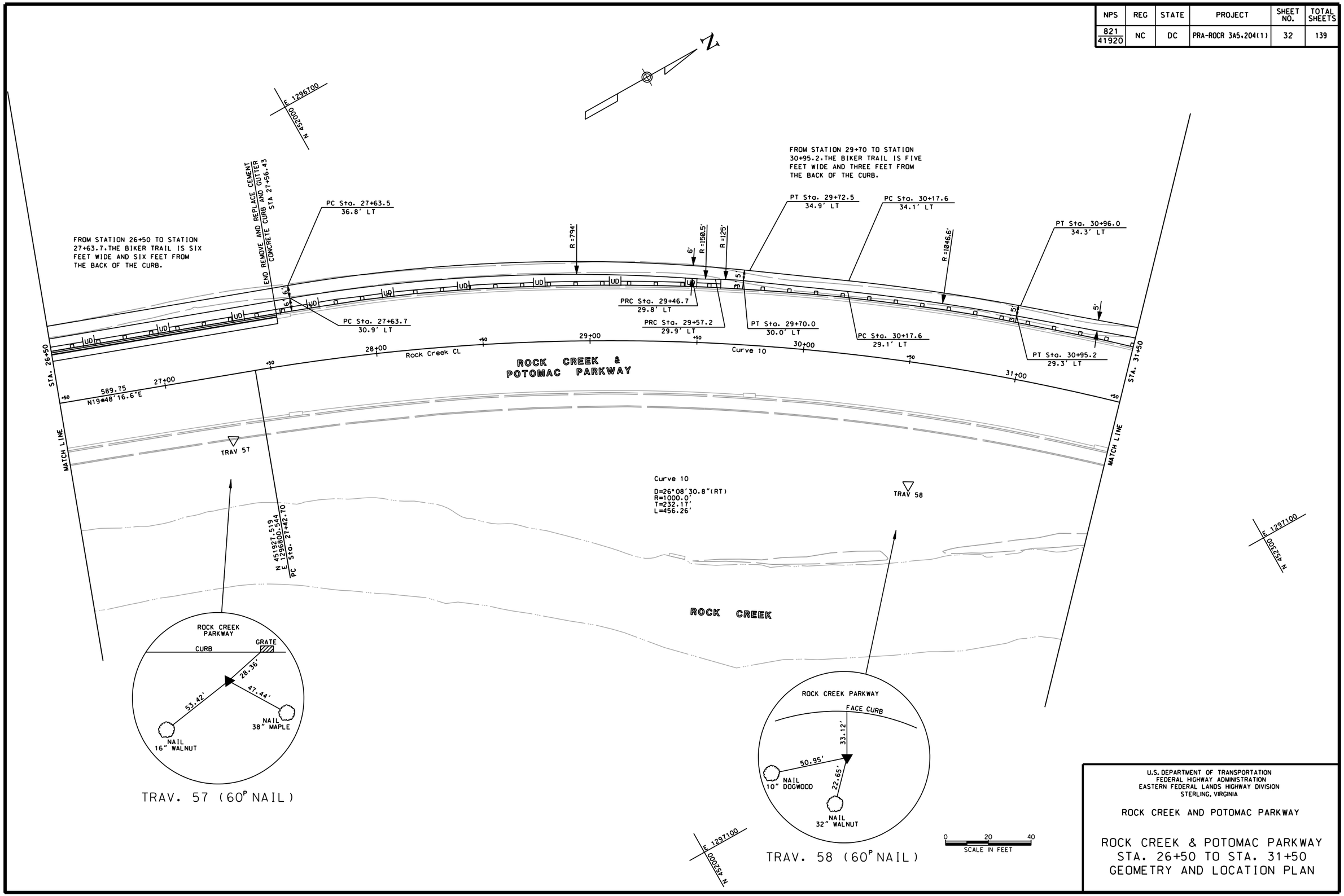

U.S. DEPARTMENT OF TRANSPORTATION
FEDERAL HIGHWAY ADMINISTRATION
EASTERN FEDERAL LANDS HIGHWAY DIVISION
STERLING, VIRGINIA

ROCK CREEK AND POTOMAC PARKWAY

ROCK CREEK & POTOMAC PARKWAY
STA. 26+50 TO STA. 31+50
GEOMETRY AND LOCATION PLAN

NPS	REG	STATE	PROJECT	SHEET NO.	TOTAL SHEETS
821 41920	NC	DC	PRA-ROCR 3A5.204(1)	33	139

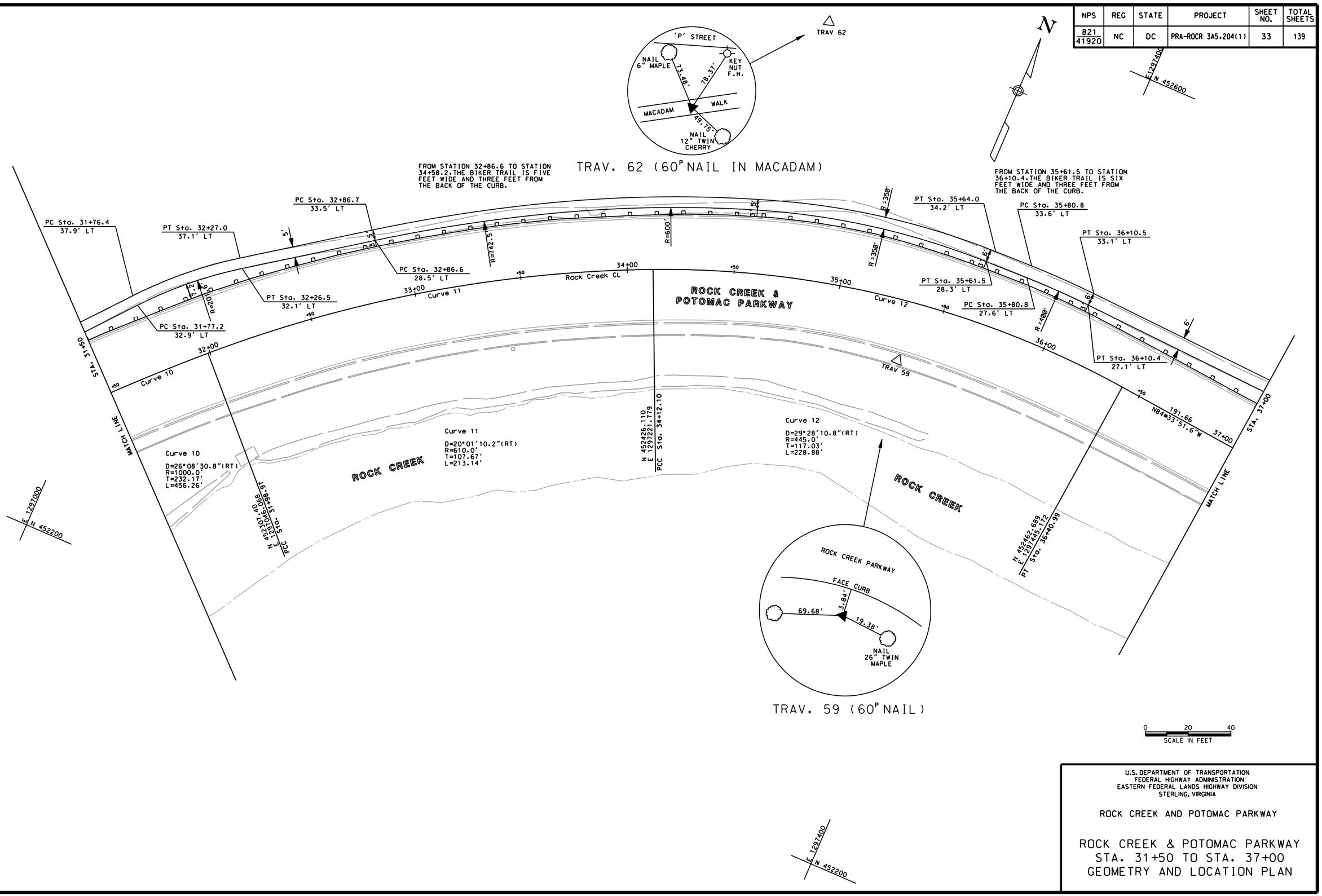

U.S. DEPARTMENT OF TRANSPORTATION
FEDERAL HIGHWAY ADMINISTRATION
EASTERN FEDERAL LANDS HIGHWAY DIVISION
STERLING, VIRGINIA

ROCK CREEK AND POTOMAC PARKWAY

ROCK CREEK & POTOMAC PARKWAY
STA. 31+50 TO STA. 37+00
GEOMETRY AND LOCATION PLAN

NPS	REG	STATE	PROJECT	SHEET NO.	TOTAL SHEETS
821 41920	NC	DC	PRA-ROCR 3A5.204(1)	34	139

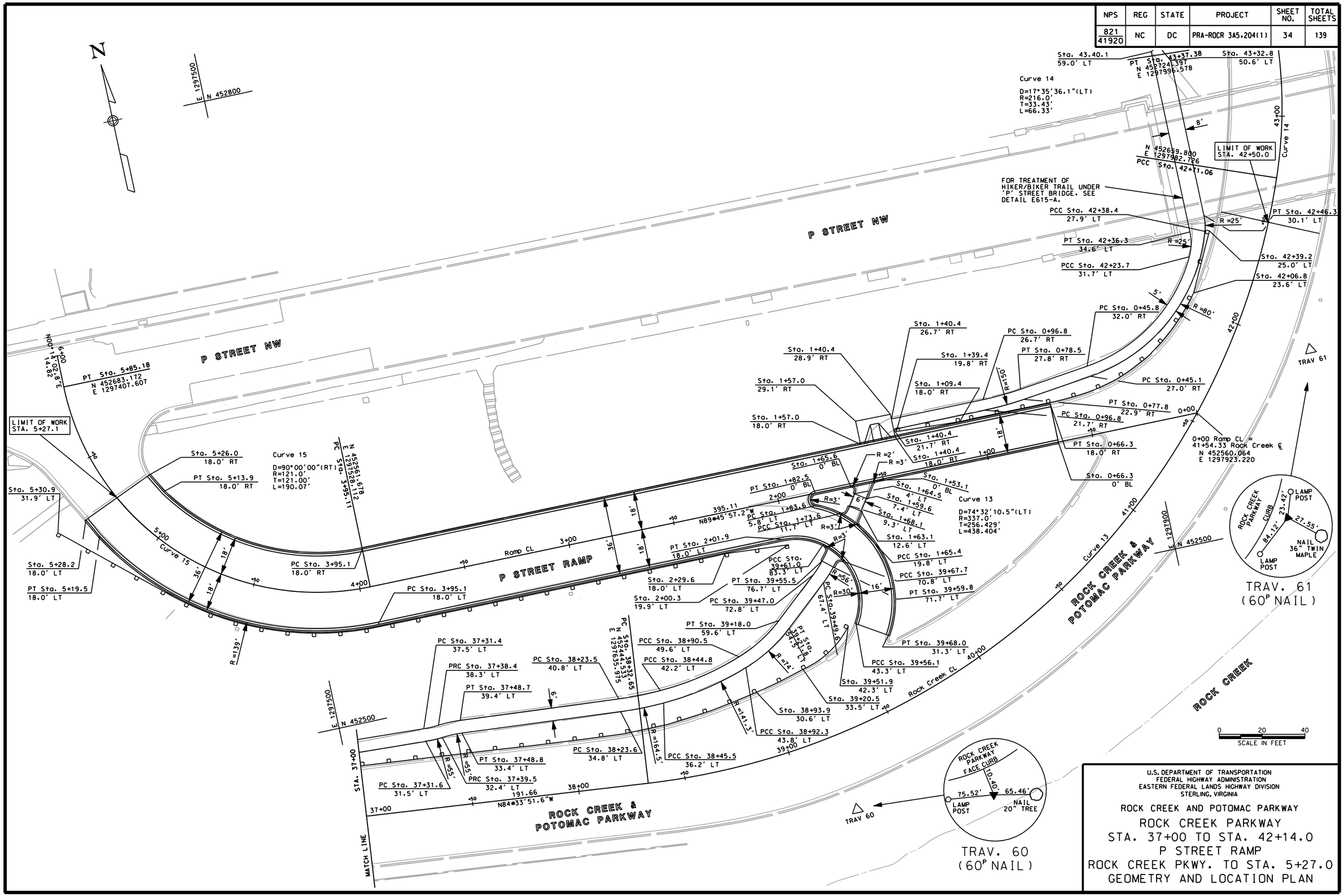

U.S. DEPARTMENT OF TRANSPORTATION
FEDERAL HIGHWAY ADMINISTRATION
EASTERN FEDERAL LANDS HIGHWAY DIVISION
STERLING, VIRGINIA

ROCK CREEK AND POTOMAC PARKWAY

ROCK CREEK PARKWAY
STA. 37+00 TO STA. 42+14.0
P STREET RAMP
ROCK CREEK PKWY. TO STA. 5+27.0
GEOMETRY AND LOCATION PLAN

NPS	REG	STATE	PROJECT	SHEET NO.	TOTAL SHEETS
521 411220	NC	DC	PRM-ROCR 345.204(1)	35	139

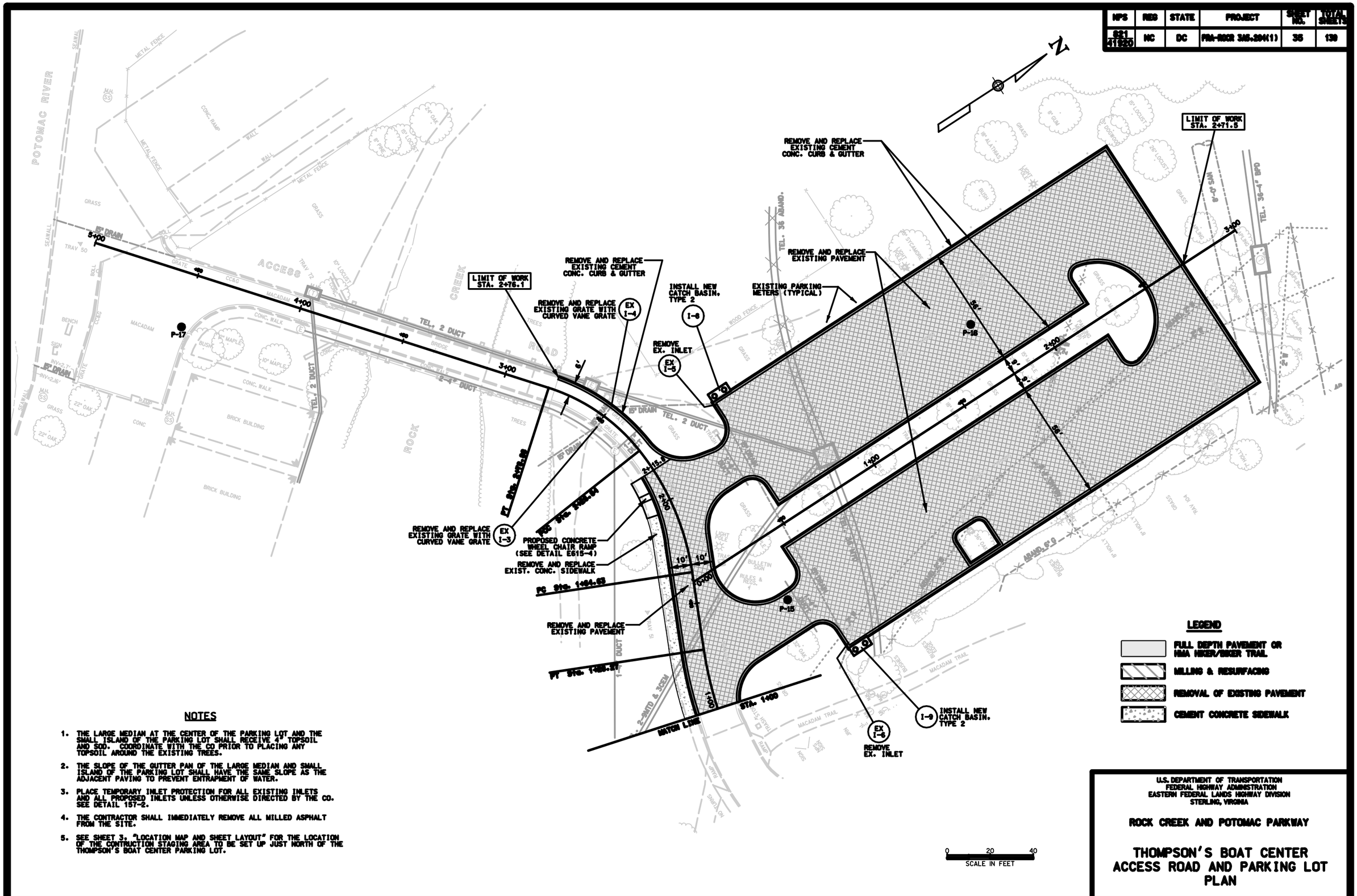

NOTES

1. THE LARGE MEDIAN AT THE CENTER OF THE PARKING LOT AND THE SMALL ISLAND OF THE PARKING LOT SHALL RECEIVE 4" TOPSOIL AND SOD. COORDINATE WITH THE CO PRIOR TO PLACING ANY TOPSOIL AROUND THE EXISTING TREES.
2. THE SLOPE OF THE GUTTER PAN OF THE LARGE MEDIAN AND SMALL ISLAND OF THE PARKING LOT SHALL HAVE THE SAME SLOPE AS THE ADJACENT PAVING TO PREVENT ENTRAPMENT OF WATER.
3. PLACE TEMPORARY INLET PROTECTION FOR ALL EXISTING INLETS AND ALL PROPOSED INLETS UNLESS OTHERWISE DIRECTED BY THE CO. SEE DETAIL 157-2.
4. THE CONTRACTOR SHALL IMMEDIATELY REMOVE ALL MILLED ASPHALT FROM THE SITE.
5. SEE SHEET 3, "LOCATION MAP AND SHEET LAYOUT" FOR THE LOCATION OF THE CONTRUCTION STAGING AREA TO BE SET UP JUST NORTH OF THE THOMPSON'S BOAT CENTER PARKING LOT.

LEGEND

- FULL DEPTH PAVEMENT OR HMA HIKER/BIKER TRAIL
- MILLING & RESURFACING
- REMOVAL OF EXISTING PAVEMENT
- CEMENT CONCRETE SIDEWALK

U.S. DEPARTMENT OF TRANSPORTATION
FEDERAL HIGHWAY ADMINISTRATION
EASTERN FEDERAL LANDS HIGHWAY DIVISION
STERLING, VIRGINIA

ROCK CREEK AND POTOMAC PARKWAY

THOMPSON'S BOAT CENTER ACCESS ROAD AND PARKING LOT PLAN

\ps01rock.dgn 8/11/2006 2:03:05 PM

NPS	REG	STATE	PROJECT	SHEET NO.	TOTAL SHEETS
621 41220	NC	DC	FRA-ROCR 345.204(1)	36	130

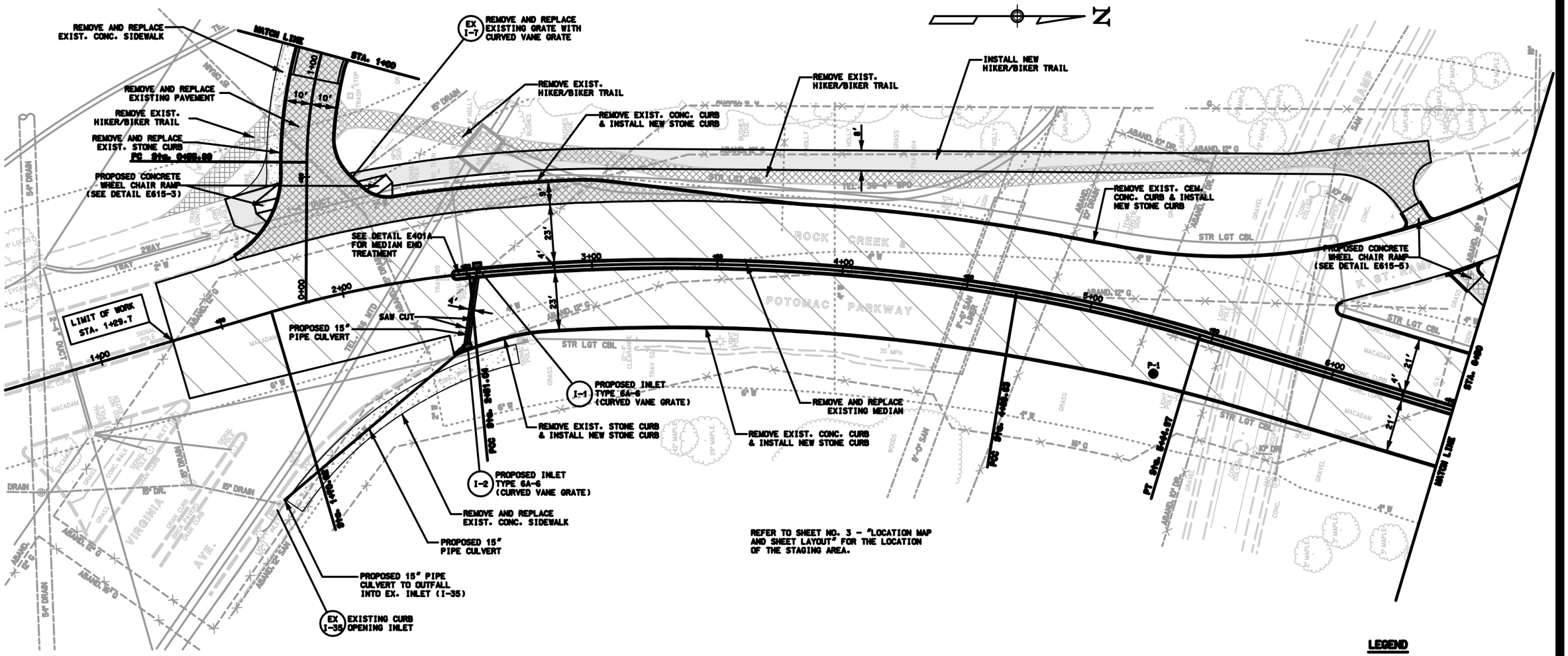

LEGEND

- FULL DEPTH PAVEMENT OR HMA HIKER/BIKER TRAIL
- MILLING & RESURFACING
- REMOVAL OF EXISTING PAVEMENT
- CEMENT CONCRETE SIDEWALK

NOTES

1. PLACE TEMPORARY INLET PROTECTION FOR ALL EXISTING INLETS AND ALL PROPOSED INLETS UNLESS OTHERWISE DIRECTED BY THE CO. SEE DETAIL 157-2.
2. AREAS OF EXISTING TRAIL REMOVED AND NOT SCHEDULED FOR REPLACEMENT SHALL BE SCARIFIED. BACK-FILLED WITH COMPACTED SOIL AND SODDED.
3. THE CONTRACTOR SHALL IMMEDIATELY REMOVE ALL MILLED ASPHALT FROM THE SITE.

0 20 40
SCALE IN FEET

U.S. DEPARTMENT OF TRANSPORTATION
FEDERAL HIGHWAY ADMINISTRATION
EASTERN FEDERAL LANDS HIGHWAY DIVISION
STERLING, VIRGINIA

ROCK CREEK AND POTOMAC PARKWAY

ROCK CREEK & POTOMAC PARKWAY STA. 1+29.7 TO STA. 6+50 PLAN

...\ps02rock.dgn 8/11/2006 3:18:47 PM

NPS	REG	STATE	PROJECT	SHEET NO.	TOTAL SHEETS
621 11920	NC	DC	FRA-ROCR 3/6, 204(1)	37	139

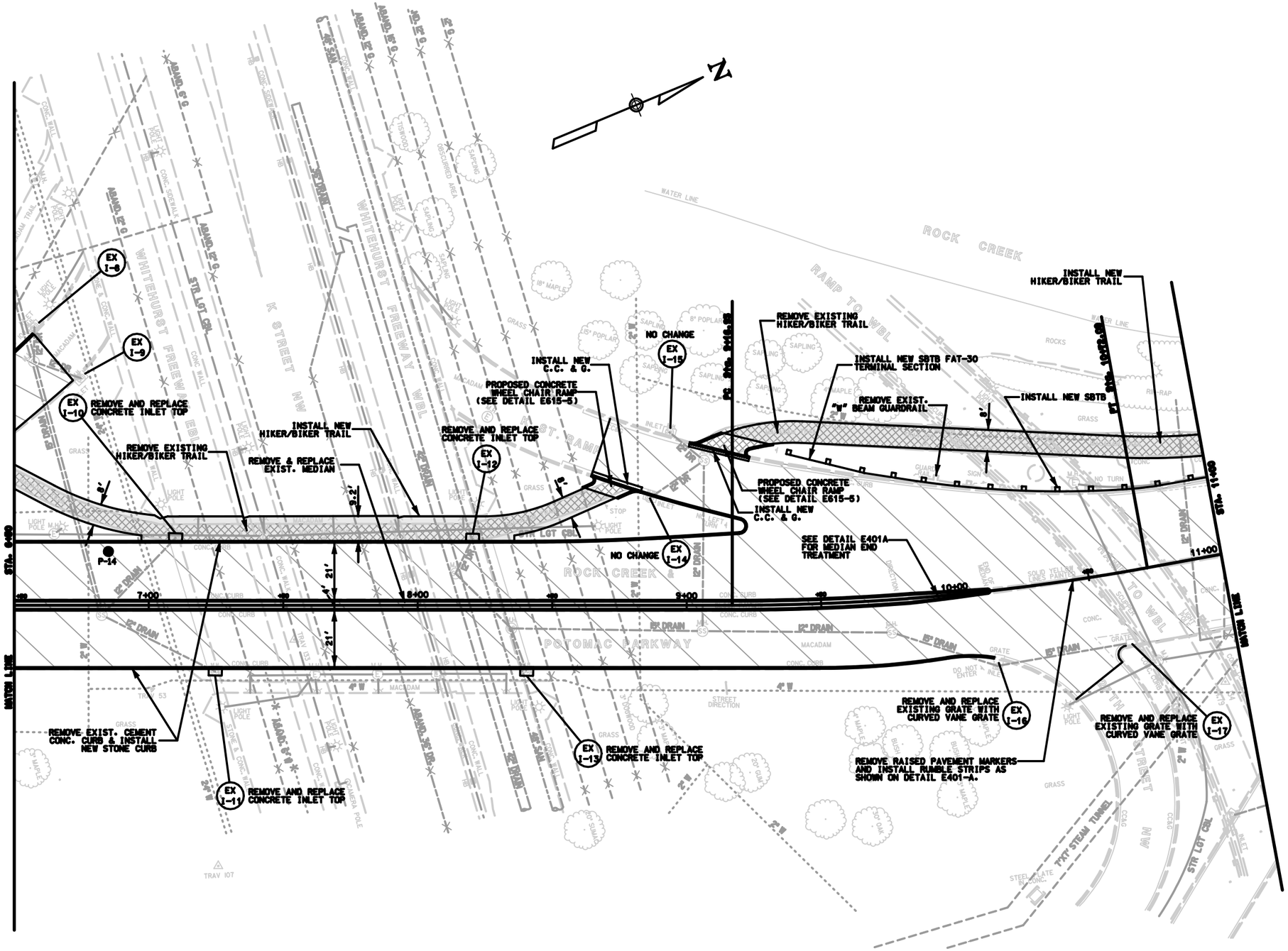

NOTES

1. PLACE TEMPORARY INLET PROTECTION FOR ALL EXISTING INLETS AND ALL PROPOSED INLETS UNLESS OTHERWISE DIRECTED BY THE CO. SEE DETAIL 157-2.
2. AREAS OF EXISTING TRAIL REMOVED AND NOT SCHEDULED FOR REPLACEMENT SHALL BE SCARIFIED, BACK-FILLED WITH COMPACTED SOIL AND SODDED.
3. THE CONTRACTOR SHALL IMMEDIATELY REMOVE ALL MILLED ASPHALT FROM THE SITE.

LEGEND

- FULL DEPTH PAVEMENT OR HMA HIKER/BIKER TRAIL
- MILLING & RESURFACING
- REMOVAL OF EXISTING PAVEMENT
- CEMENT CONCRETE SIDEWALK

U.S. DEPARTMENT OF TRANSPORTATION
FEDERAL HIGHWAY ADMINISTRATION
EASTERN FEDERAL LANDS HIGHWAY DIVISION
STERLING, VIRGINIA

ROCK CREEK AND POTOMAC PARKWAY

ROCK CREEK & POTOMAC PARKWAY STA. 6+50 TO STA. 11+00 PLAN

...\ps03rock.dgn 8/11/2006 3:22:28 PM

NPS	REG	STATE	PROJECT	SHEET NO.	TOTAL SHEETS
621 41920	NC	DC	FRA-ROCR 3A6,204(1)	38	139

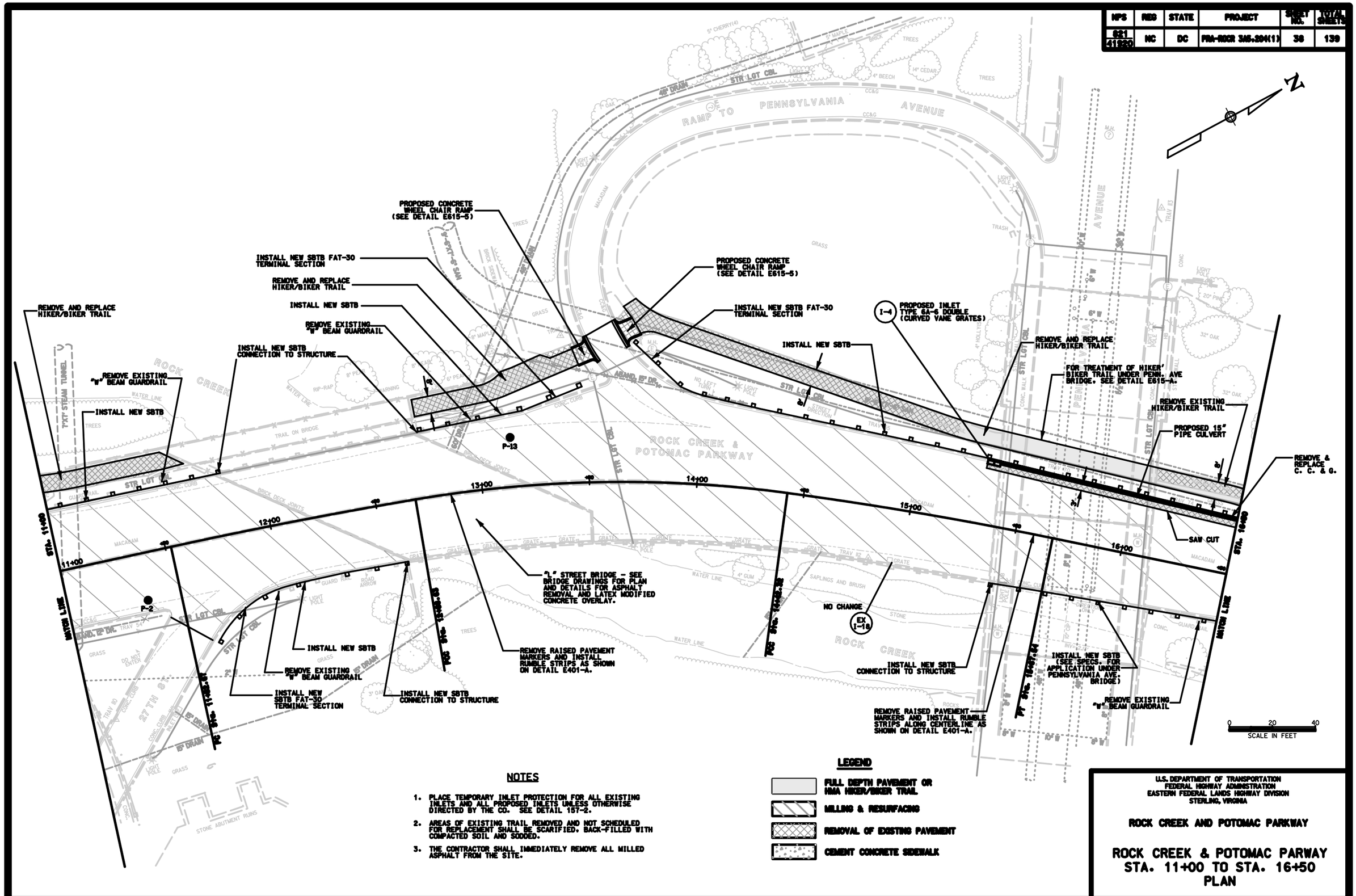

NOTES

1. PLACE TEMPORARY INLET PROTECTION FOR ALL EXISTING INLETS AND ALL PROPOSED INLETS UNLESS OTHERWISE DIRECTED BY THE CO. SEE DETAIL 15T-2.
2. AREAS OF EXISTING TRAIL REMOVED AND NOT SCHEDULED FOR REPLACEMENT SHALL BE SCARIFIED, BACK-FILLED WITH COMPACTED SOIL AND SODDED.
3. THE CONTRACTOR SHALL IMMEDIATELY REMOVE ALL MILLED ASPHALT FROM THE SITE.

LEGEND

- FULL DEPTH PAVEMENT OR HMA HIKER/BIKER TRAIL
- MILLING & RESURFACING
- REMOVAL OF EXISTING PAVEMENT
- CEMENT CONCRETE SIDEWALK

U.S. DEPARTMENT OF TRANSPORTATION
FEDERAL HIGHWAY ADMINISTRATION
EASTERN FEDERAL LANDS HIGHWAY DIVISION
STERLING, VIRGINIA

ROCK CREEK AND POTOMAC PARKWAY

ROCK CREEK & POTOMAC PARWAY STA. 11+00 TO STA. 16+50 PLAN

...\ps04rock.dgn 8/11/2006 3:24:09 PM

NPS	REG	STATE	PROJECT	SHEET NO.	TOTAL SHEETS
621 41220	NC	DC	FRA-ROCR 345.204(1)	39	139

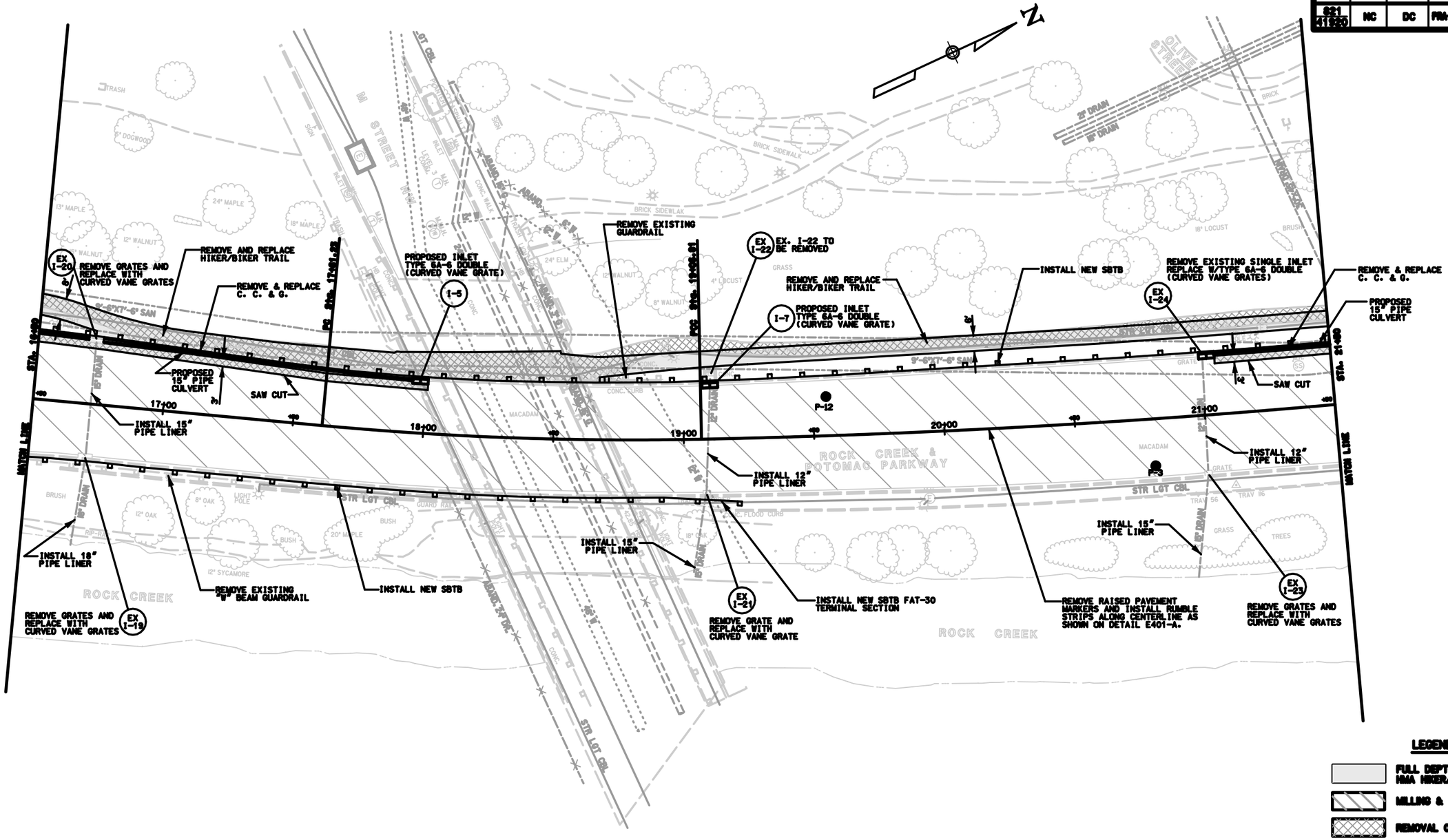

LEGEND

- FULL DEPTH PAVEMENT OR HMA HIKER/BIKER TRAIL
- MILLING & RESURFACING
- REMOVAL OF EXISTING PAVEMENT
- CEMENT CONCRETE SIDEWALK

NOTES

1. PLACE TEMPORARY INLET PROTECTION FOR ALL EXISTING INLETS AND ALL PROPOSED INLETS UNLESS OTHERWISE DIRECTED BY THE CO. SEE DETAIL 157-2.
2. AREAS OF EXISTING TRAIL REMOVED AND NOT SCHEDULED FOR REPLACEMENT SHALL BE SCARIFIED. BACK-FILLED WITH COMPACTED SOIL AND SODDED.
3. THE CONTRACTOR SHALL IMMEDIATELY REMOVE ALL MILLED ASPHALT FROM THE SITE.

0 20 40
SCALE IN FEET

U.S. DEPARTMENT OF TRANSPORTATION
FEDERAL HIGHWAY ADMINISTRATION
EASTERN FEDERAL LANDS HIGHWAY DIVISION
STERLING, VIRGINIA

ROCK CREEK AND POTOMAC PARKWAY

ROCK CREEK & POTOMAC PARKWAY STA. 16+50 TO STA. 21+50 PLAN

...\ps05rock.dgn 8/11/2006 3:25:56 PM

NPS	REG	STATE	PROJECT	SHEET NO.	TOTAL SHEETS
621 41920	NC	DC	FRA-ROCR 3(6.204(1)	40	139

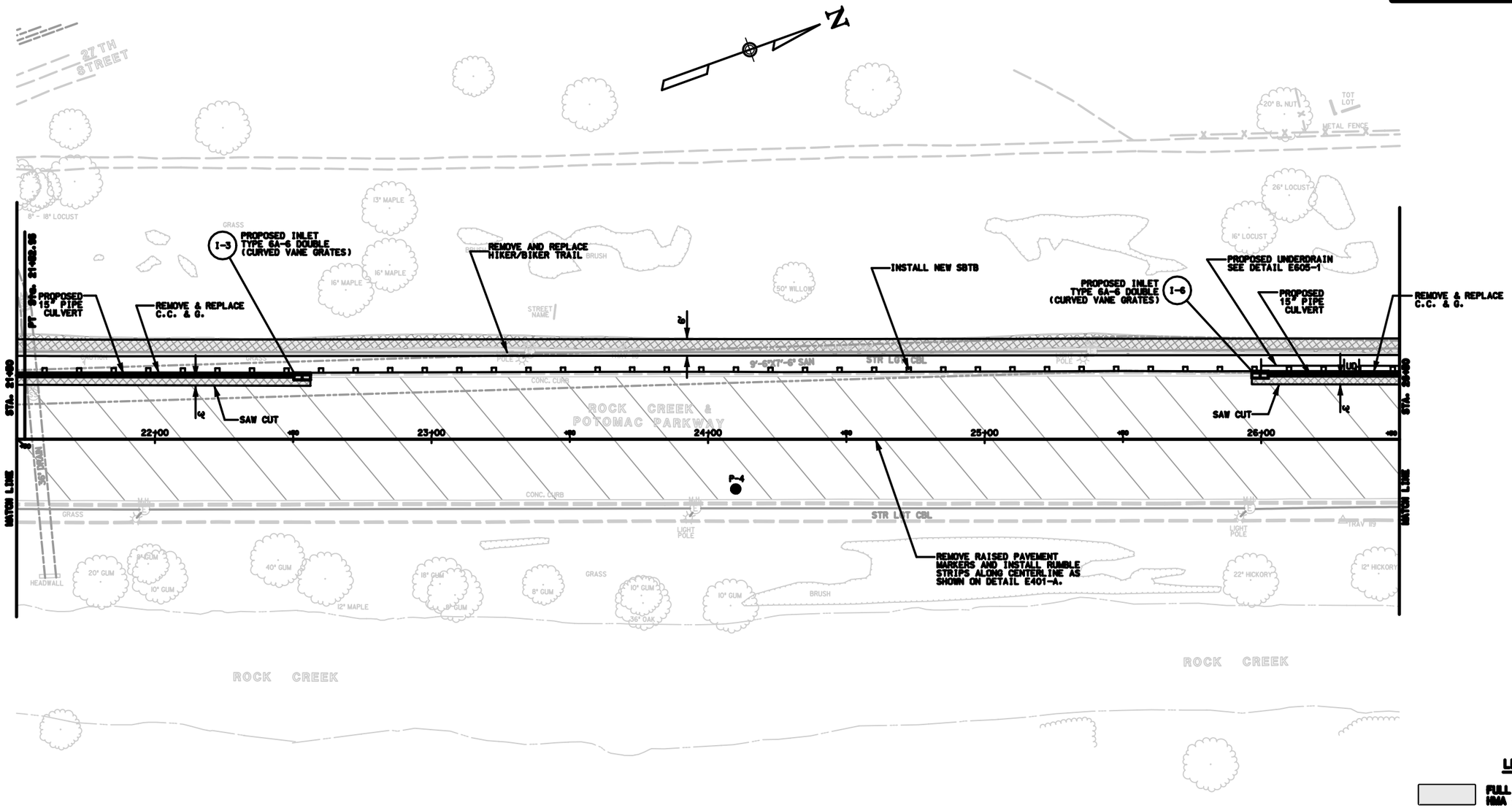

LEGEND

- FULL DEPTH PAVEMENT OR HMA HIKER/BIKER TRAIL
- MILLING & RESURFACING
- REMOVAL OF EXISTING PAVEMENT
- CEMENT CONCRETE SIDEWALK

NOTES

1. PLACE TEMPORARY INLET PROTECTION FOR ALL EXISTING INLETS AND ALL PROPOSED INLETS UNLESS OTHERWISE DIRECTED BY THE CO. SEE DETAIL 157-2.
2. AREAS OF EXISTING TRAIL REMOVED AND NOT SCHEDULED FOR REPLACEMENT SHALL BE SCARIFIED, BACK-FILLED WITH COMPACTED SOIL AND SODDED.
3. THE CONTRACTOR SHALL IMMEDIATELY REMOVE ALL MILLED ASPHALT FROM THE SITE.

0 20 40
SCALE IN FEET

U.S. DEPARTMENT OF TRANSPORTATION
FEDERAL HIGHWAY ADMINISTRATION
EASTERN FEDERAL LANDS HIGHWAY DIVISION
STERLING, VIRGINIA

ROCK CREEK AND POTOMAC PARKWAY

ROCK CREEK & POTOMAC PARKWAY STA. 21+50 TO STA. 26+50 PLAN

NPS	REG	STATE	PROJECT	SHEET NO.	TOTAL SHEETS
621 41920	NC	DC	FRA-ROCR 345.204(1)	41	139

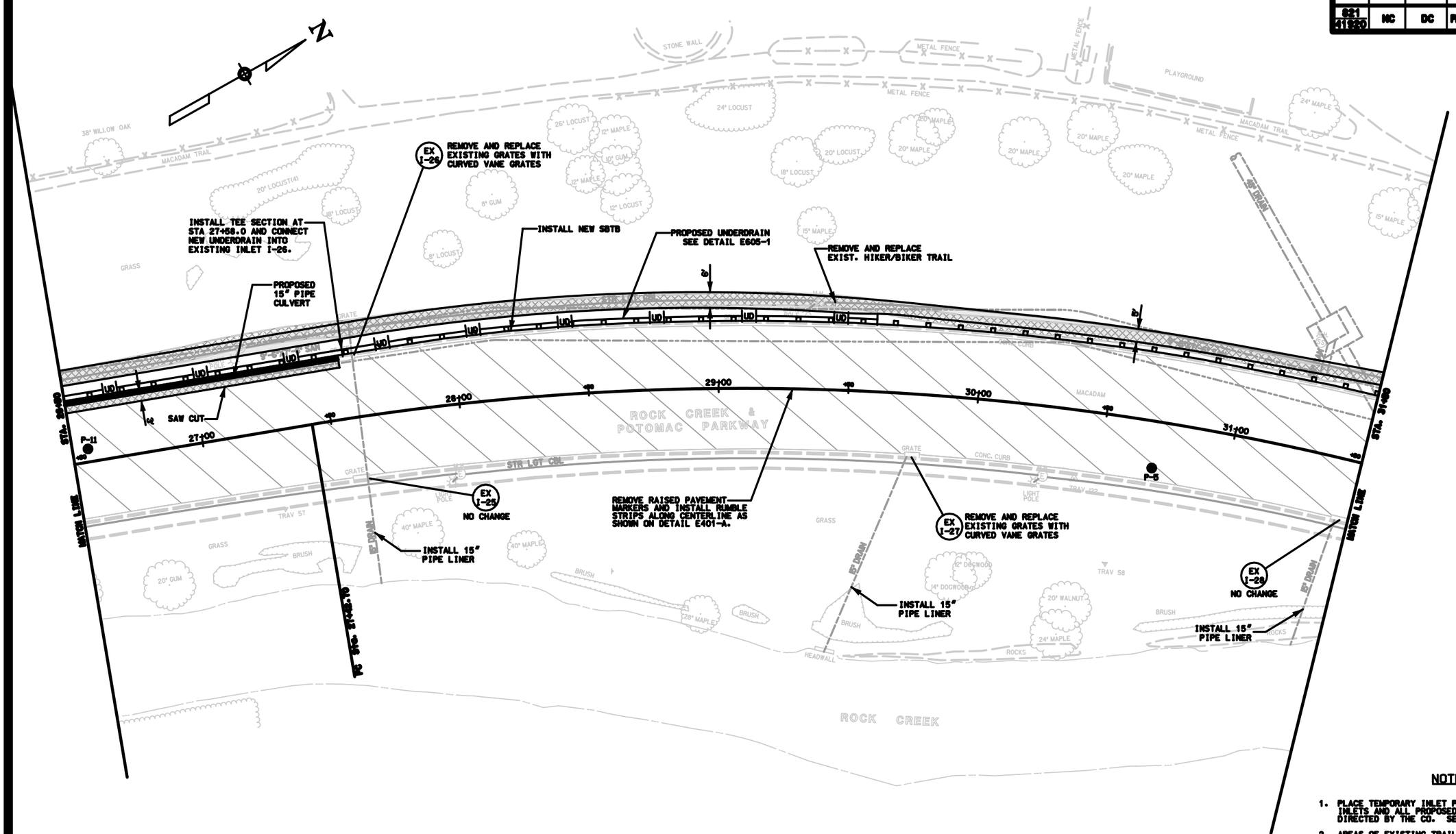

NOTES

1. PLACE TEMPORARY INLET PROTECTION FOR ALL EXISTING INLETS AND ALL PROPOSED INLETS UNLESS OTHERWISE DIRECTED BY THE CO. SEE DETAIL 157-2.
2. AREAS OF EXISTING TRAIL REMOVED AND NOT SCHEDULED FOR REPLACEMENT SHALL BE SCARIFIED. BACK-FILLED WITH COMPACTED SOIL AND SODDED.
3. THE CONTRACTOR SHALL IMMEDIATELY REMOVE ALL MILLED ASPHALT FROM THE SITE.

U.S. DEPARTMENT OF TRANSPORTATION
FEDERAL HIGHWAY ADMINISTRATION
EASTERN FEDERAL LANDS HIGHWAY DIVISION
STERLING, VIRGINIA

ROCK CREEK AND POTOMAC PARKWAY

ROCK CREEK & POTOMAC PARKWAY STA. 26+50 TO STA. 31+50 PLAN

...\ps07rock.dgn 8/11/2006 3:31:24 PM

NPS	REG	STATE	PROJECT	SHEET NO.	TOTAL SHEETS
621 41920	NC	DC	FRA-ROCR 345.204(1)	42	139

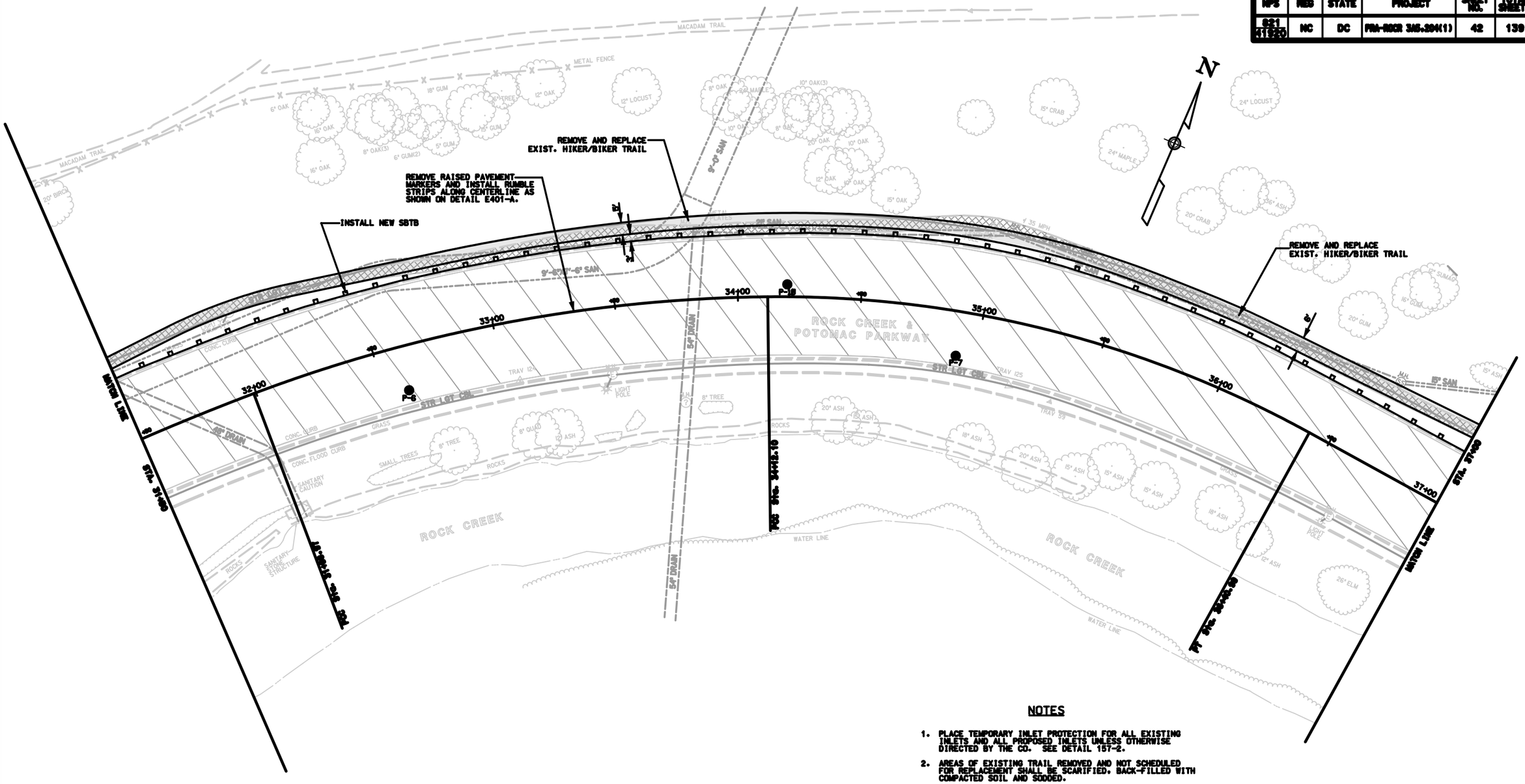

NOTES

1. PLACE TEMPORARY INLET PROTECTION FOR ALL EXISTING INLETS AND ALL PROPOSED INLETS UNLESS OTHERWISE DIRECTED BY THE CO. SEE DETAIL 157-2.
2. AREAS OF EXISTING TRAIL REMOVED AND NOT SCHEDULED FOR REPLACEMENT SHALL BE SCARIFIED, BACK-FILLED WITH COMPACTED SOIL AND SODDED.
3. THE CONTRACTOR SHALL IMMEDIATELY REMOVE ALL MILLED ASPHALT FROM THE SITE.

LEGEND

- FULL DEPTH PAVEMENT OR HMA HIKER/BIKER TRAIL
- MILLING & RESURFACING
- REMOVAL OF EXISTING PAVEMENT
- CEMENT CONCRETE SIDEWALK

U.S. DEPARTMENT OF TRANSPORTATION
FEDERAL HIGHWAY ADMINISTRATION
EASTERN FEDERAL LANDS HIGHWAY DIVISION
STERLING, VIRGINIA

ROCK CREEK AND POTOMAC PARKWAY

ROCK CREEK & POTOMAC PARKWAY STA. 31+50 TO STA. 37+00 PLAN

...\ps08rock.dgn 8/11/2006 3:32:31 PM

MPS	REG	STATE	PROJECT	SHEET NO.	TOTAL SHEETS
621 41820	NC	DC	PRA-RCR 345.204(1)	43	139

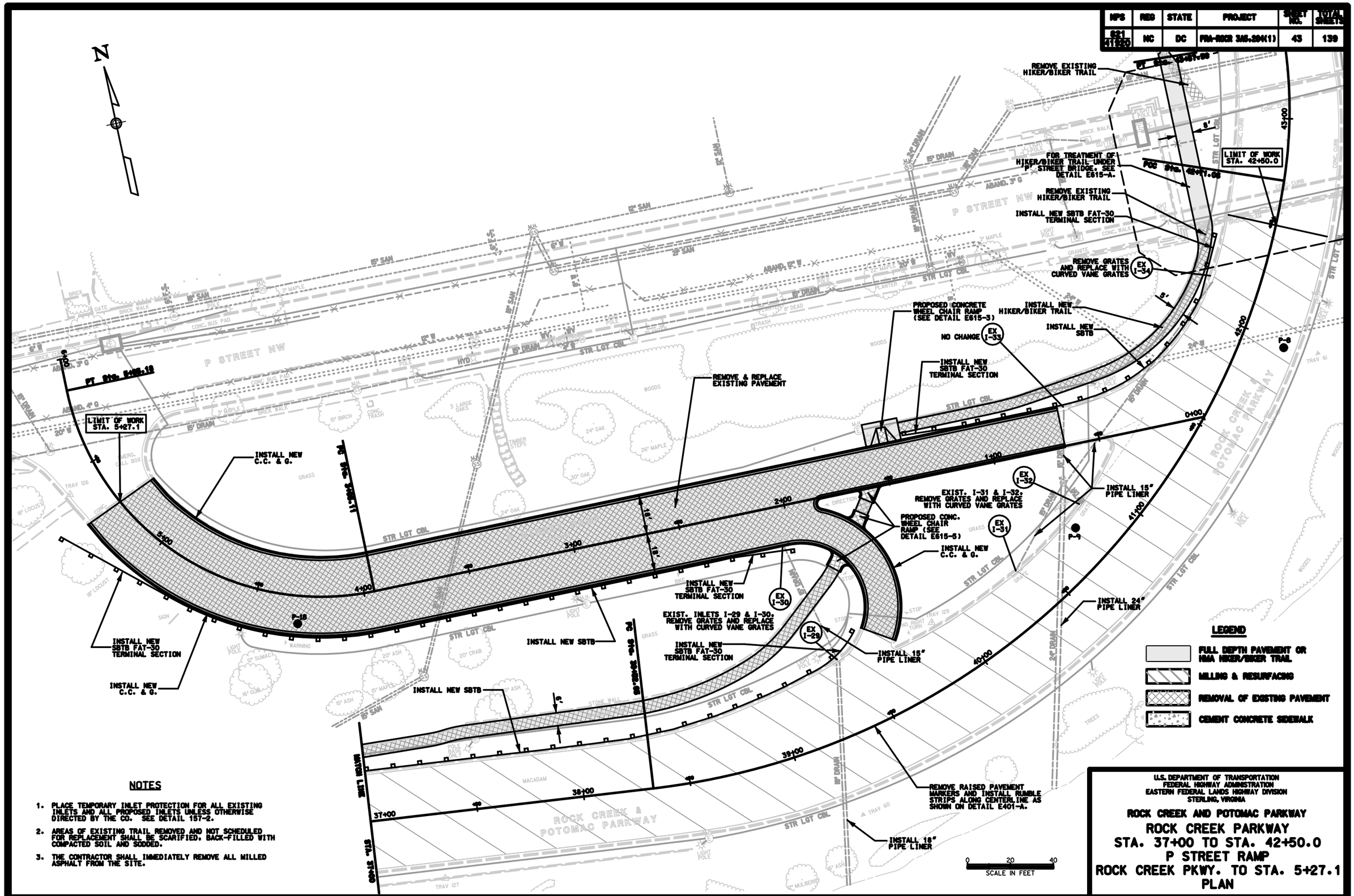

NOTES

1. PLACE TEMPORARY INLET PROTECTION FOR ALL EXISTING INLETS AND ALL PROPOSED INLETS UNLESS OTHERWISE DIRECTED BY THE CO. SEE DETAIL 157-2.
2. AREAS OF EXISTING TRAIL REMOVED AND NOT SCHEDULED FOR REPLACEMENT SHALL BE SCARIFIED, BACK-FILLED WITH COMPACTED SOIL AND SODDED.
3. THE CONTRACTOR SHALL IMMEDIATELY REMOVE ALL MILLED ASPHALT FROM THE SITE.

U.S. DEPARTMENT OF TRANSPORTATION
FEDERAL HIGHWAY ADMINISTRATION
EASTERN FEDERAL LANDS HIGHWAY DIVISION
STERLING, VIRGINIA

ROCK CREEK AND POTOMAC PARKWAY

ROCK CREEK PARKWAY
STA. 37+00 TO STA. 42+50.0
P STREET RAMP
ROCK CREEK PKWY. TO STA. 5+27.1
PLAN

...\ps09rock.dgn 8/11/2006 3:35:51 PM

NPS	REG	STATE	PROJECT	SHEET NO.	TOTAL SHEETS
821 / 41920	NC	DC	PRA-ROCR 3A5, 204(1)	44	139

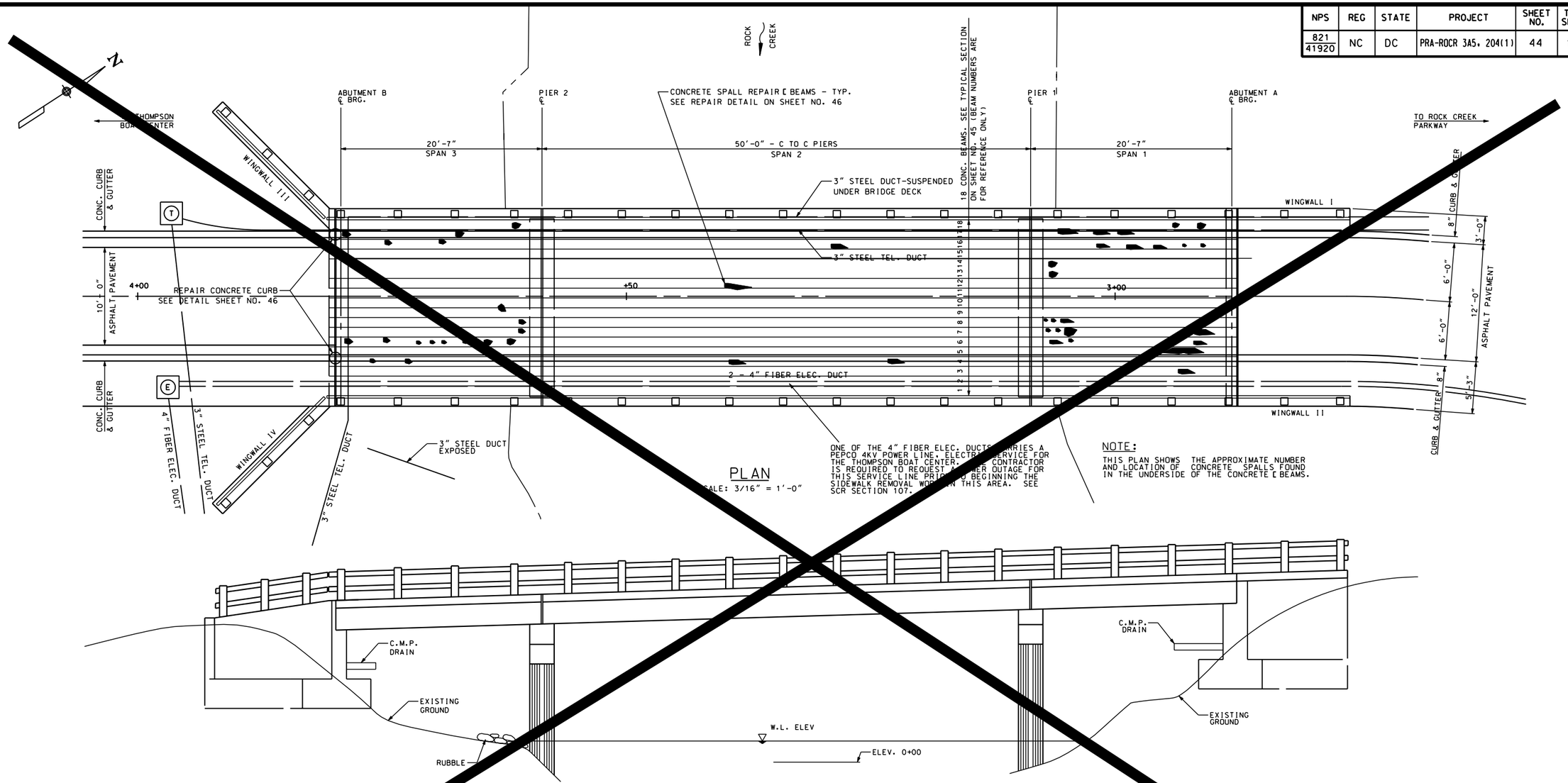

ONE OF THE 4" FIBER ELEC. DUCTS CARRIES A PEPCO 4KV POWER LINE. ELECTRICAL SERVICE FOR THE THOMPSON BOAT CENTER. THE CONTRACTOR IS REQUIRED TO REQUEST A POWER OUTAGE FOR THIS SERVICE LINE PRIOR TO BEGINNING THE SIDEWALK REMOVAL WORK IN THIS AREA. SEE SCR SECTION 107.

PLAN

SCALE: 3/16" = 1'-0"

NOTE:

THIS PLAN SHOWS THE APPROXIMATE NUMBER AND LOCATION OF CONCRETE SPALLS FOUND IN THE UNDERSIDE OF THE CONCRETE [BEAMS.

ELEVATION

SCALE: 3/16" = 1'-0"

BRIDGE REPAIR NOTES:

1. THIS PLAN SHOWS THE APPROXIMATE LOCATION OF CONCRETE SPALLS FOUND IN THE UNDERSIDE OF THE PRESTRESSED CONCRETE [BEAMS. THESE AND OTHER DEFECTS FOUND DURING CONSTRUCTION SHALL BE REPAIRED AS DIRECTED BY THE CONTRACT OFFICER AND AS SPECIFIED IN THESE CONSTRUCTION DOCUMENTS.
2. REPAIRS NEEDED TO THE UPPER SURFACE OF THE CONCRETE [BEAMS WILL NOT BE KNOWN UNTIL THE ASPHALT OVERLAY IS REMOVED.
3. AFTER THE ASPHALT OVERLAY IS REMOVED THE CONTRACTOR SHALL INSPECT THE [BEAMS, BOTH THE UPPER AND LOWER SURFACES AND THE JOINTS AT THE ABUTMENTS AND PIERS AND PREPARE A CONDITION REPORT TO BE SUBMITTED TO THE CO. SEE SCR SECTION 203. THE PLANS CONTAIN DETAILS FOR THE CONCRETE REPAIRS AND FOR THE RECONSTRUCTION OF THE JOINTS. ANY ADDITIONAL DEFECTS FOUND IN THE CONCRETE [BEAMS DURING CONSTRUCTION SHALL BE BROUGHT TO THE ATTENTION OF THE CONTRACT OFFICER WHO WILL SPECIFY THE TYPE OF REPAIR NEEDED.
4. THE REMOVAL OF THE ASPHALT OVERLAY AND THE REMOVAL OF LOOSE AND DETERIORATED CONCRETE FROM THE [BEAMS SHALL BE DONE IN ACCORDANCE WITH SCR SECTION 203.
5. CONCRETE REPAIRS TO THE [BEAMS AND PLACING THE LATEX MODIFIED CONCRETE OVERLAY SHALL BE DONE IN ACCORDANCE WITH SCR SECTION 552.
6. FOR THE OVERHEAD CONCRETE REPAIRS TO THE UNDERSIDE OF THE [BEAMS, USE A HIGH STRENGTH CONCRETE PATCHING COMPOUND PLACED IN ACCORDANCE WITH THE MANUFACTURE'S RECOMMENDATIONS.
7. FOR THE CONCRETE REPAIRS TO THE TOP OF THE [BEAMS, THE CONTRACTOR HAS THE OPTION OF REPAIRING USING A HIGH STRENGTH CONCRETE PATCHING COMPOUND OR FILLING THE VOIDS WITH LATEX MODIFIED CONCRETE WHILE APPLYING THE OVERLAY.
8. PRIOR TO PLACING THE LATEX MODIFIED CONCRETE OVERLAY, THE ENTIRE SURFACE TO BE OVERLAID SHALL BE CLEANED AS SPECIFIED IN SCR SECTION 552.11(b).
9. THE LATEX MODIFIED CONCRETE OVERLAY FOR THE ENTIRE BRIDGE SHALL BE APPLIED IN ONE CONTINUOUS POUR. NO TRANSVERSE JOINTS WILL BE PERMITTED.
10. THE CONTRACTOR SHALL MAKE MISCELLANEOUS CONCRETE REPAIRS TO CURBS AND OTHER SURFACES AS SHOWN ON THE PLANS AND AS DIRECTED BY THE CONTRACT OFFICER.

N.I.C.

U.S. DEPARTMENT OF TRANSPORTATION
FEDERAL HIGHWAY ADMINISTRATION
EASTERN FEDERAL LANDS HIGHWAY DIVISION
STERLING, VIRGINIA

ROCK CREEK AND POTOMAC PARKWAY

REPAIRS TO THE THOMPSON BOAT CENTER ACCESS ROAD BRIDGE OVER ROCK CREEK
PLAN AND ELEVATION

NPS	REG	STATE	PROJECT	SHEET NO.	TOTAL SHEETS
821 / 41920	NC	DC	PRA-ROCR 3A5, 204(1)	45	139

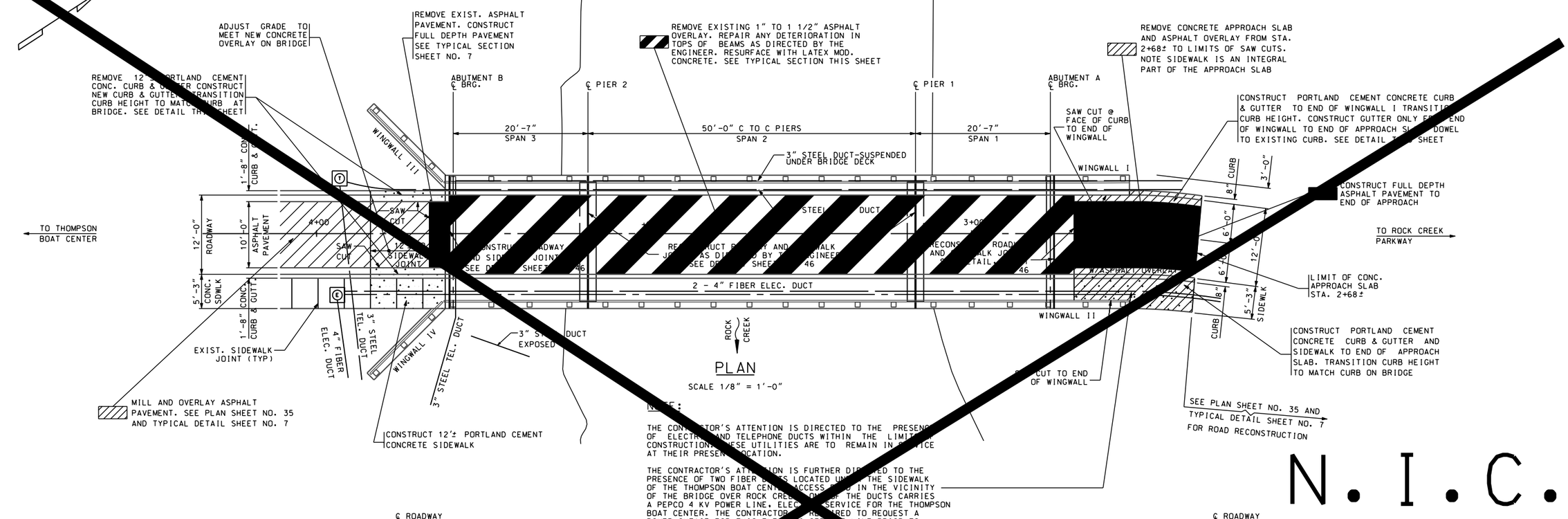

PLAN

SCALE 1/8" = 1'-0"

NOTE:

THE CONTRACTOR'S ATTENTION IS DIRECTED TO THE PRESENCE OF ELECTRIC AND TELEPHONE DUCTS WITHIN THE LIMITS OF CONSTRUCTION. THESE UTILITIES ARE TO REMAIN IN SERVICE AT THEIR PRESENT LOCATION.

THE CONTRACTOR'S ATTENTION IS FURTHER DIRECTED TO THE PRESENCE OF TWO FIBER DUCTS LOCATED UNDER THE SIDEWALK OF THE THOMPSON BOAT CENTER ACCESS ROAD IN THE VICINITY OF THE BRIDGE OVER ROCK CREEK. ONE OF THE DUCTS CARRIES A PEPCO 4 KV POWER LINE, ELECTRIC SERVICE FOR THE THOMPSON BOAT CENTER. THE CONTRACTOR IS REQUIRED TO REQUEST A POWER OUTAGE FOR THIS ELECTRIC SERVICE LINE PRIOR TO BEGINNING THE SIDEWALK REMOVAL WORK IN THIS AREA. SEE SCR'S SECTION 1[illegible]

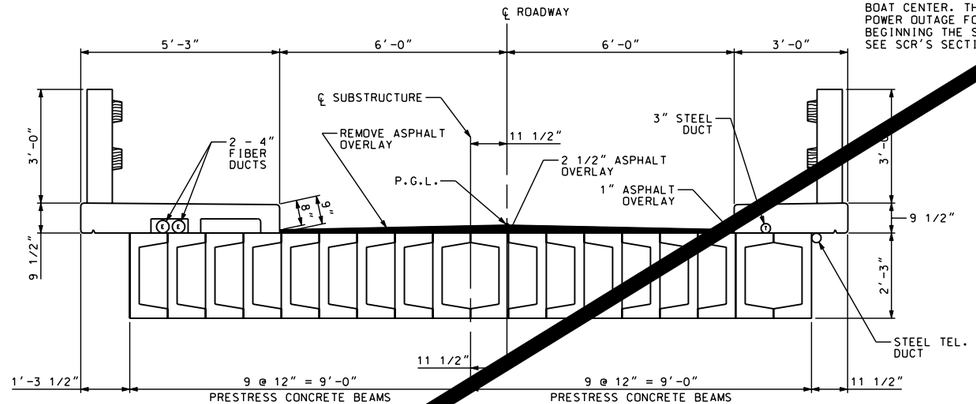

EXISTING BRIDGE TYPICAL SECTION

SCALE 1/2" = 1'-0"

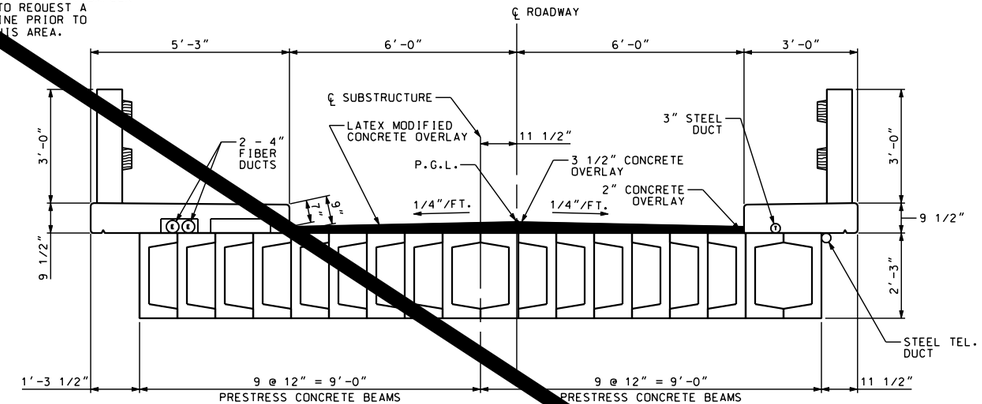

PROPOSED LATEX MODIFIED CONCRETE OVERLAY

SCALE 1/2" = 1'-0"

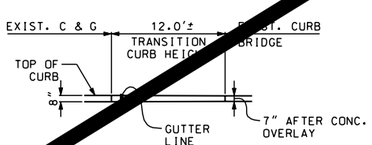

CURB HEIGHT TRANSITION

NOT TO SCALE

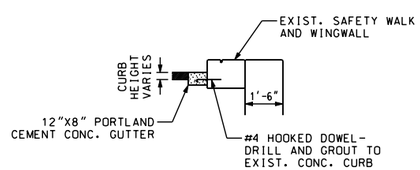

PROPOSED GUTTER AT WINGWALL I

NOT TO SCALE

NOTES:

1. SEE SPECIAL CONTRACT REQUIREMENTS, SECTION 203 REGARDING THE REMOVAL OF THE ASPHALT OVERLAY FROM THE ℄ BEAMS.
2. AFTER THE ASPHALT OVERLAY HAS BEEN REMOVED AND THE EXISTING JOINTS EXPOSED, THE CONTRACTOR SHALL INSPECT THE BRIDGE TO DETERMINE THE TYPE AND EXTENT OF ANY REPAIRS REQUIRED TO THE CONCRETE ℄ BEAMS AND THE EXTENT TO WHICH THE JOINTS SHALL BE REPAIRED. SEE SCR SECTION 203.
3. DETAILS OF CONCRETE REPAIRS TO ℄ BEAMS AND JOINT RECONSTRUCTION ARE SHOWN ON SHEET NOS. 44 AND 46.
4. SEE SCR SECTION 552 REGARDING PLACING OF THE LATEX MODIFIED CONCRETE OVERLAY.
5. SEE THE ROADWAY PLANS, TYPICAL SECTION SHEETS, AND DETAIL SHEET E609-A FOR PAVEMENT SECTIONS AND TYPES OF CURB AND GUTTER.

U.S. DEPARTMENT OF TRANSPORTATION
FEDERAL HIGHWAY ADMINISTRATION
EASTERN FEDERAL LANDS HIGHWAY DIVISION
STERLING, VIRGINIA

ROCK CREEK AND POTOMAC PARKWAY

REPAIRS TO THE THOMPSON BOAT CENTER ACCESS ROAD BRIDGE OVER ROCK CREEK
PLAN, SECTIONS, AND DETAILS

NPS	REG	STATE	PROJECT	SHEET NO.	TOTAL SHEETS
821 41920	NC	DC	PRA-ROCR 3A5, 204(1)	46	139

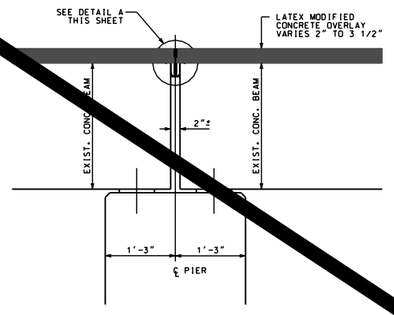

ROADWAY JOINT - PIERS 1 & 2

USE IF EXISTING COPPER WATER STOP IS DECLARED IN SATISFACTORY CONDITION BY THE CONTRACT OFFICER

SCALE: 3/4" = 1'-0"

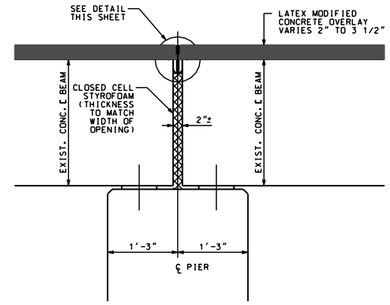

ROADWAY JOINT - PIERS 1 & 2

USE IF EXISTING COPPER WATER STOP IS DECLARED UNUSABLE BY THE CONTRACT OFFICER

SCALE: 3/4" = 1'-0"

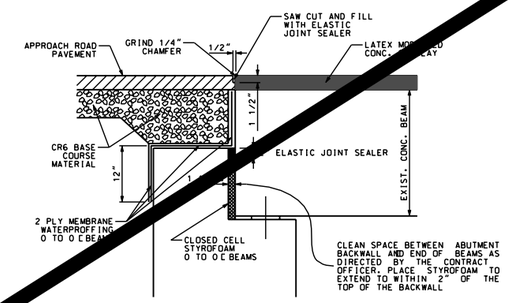

ABUTMENT B ROADWAY JOINT

SCALE: 3/4" = 1'-0"

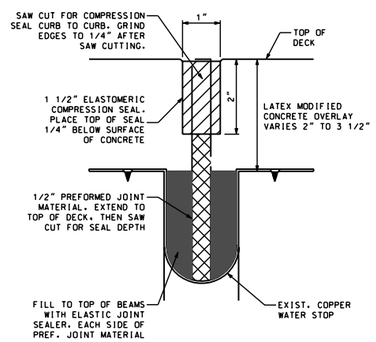

DETAIL A

NOT TO SCALE

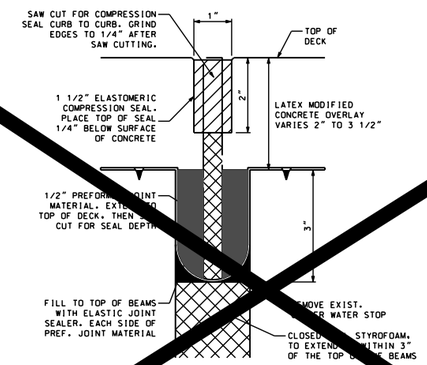

NOTE: IF EXISTING COPPER WATER STOPS ARE DETERIORATED. REMOVE THESE FROM CURB TO CURB. PLACE 2" THICK STYROFOAM SHEETS FROM CURB TO CURB AND CONSTRUCT JOINT AS SHOWN IN THIS DETAIL

ROADWAY JOINT - PIERS 1 & 2 DETAIL

NOT TO SCALE

N.I.C.

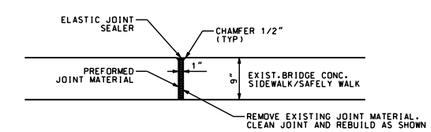

SIDEWALK, CURB AND GUTTER JOINT

SCALE: 3/4" = 1'-0"

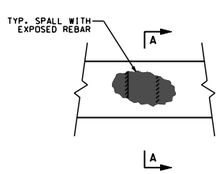

TOP OR BOTTOM OF BEAM

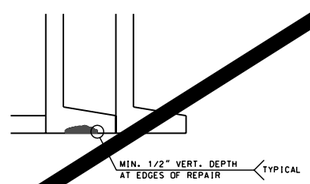

SECTION A-A

1. REMOVE LOOSE DETERIORATED CONCRETE TO SOUND CONCRETE.
2. SAND BLAST CLEAN CONCRETE AND REINFORCING STEEL.
3. APPLY PROTECTIVE COATING TO REINFORCING STEEL.
4. APPLY BONDING COAT TO CHIPPED CONCRETE SURFACE.
5. APPLY AND FINISH REPAIR MORTAR.

TYPICAL CONCRETE REPAIR BEAMS

NOT TO SCALE

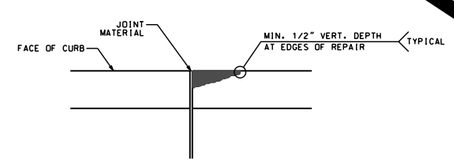

1. REMOVE LOOSE DETERIORATED CONCRETE TO SOUND CONCRETE.
2. SAND BLAST CLEAN CONCRETE AND APPLY BONDING COAT.
3. APPLY AND FINISH REPAIR MORTAR.

TYPICAL CONCRETE CURB REPAIR

NOT TO SCALE

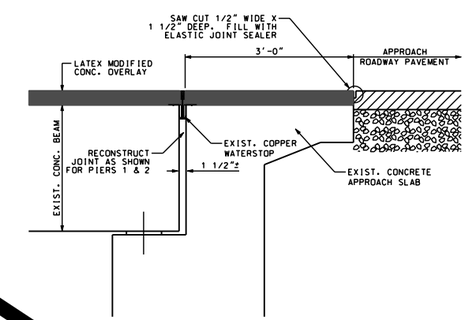

ABUTMENT A ROADWAY JOINT

SCALE: 3/4" = 1'-0"

U.S. DEPARTMENT OF TRANSPORTATION
FEDERAL HIGHWAY ADMINISTRATION
EASTERN FEDERAL LANDS HIGHWAY DIVISION
STERLING, VIRGINIA

ROCK CREEK AND POTOMAC PARKWAY

REPAIR TO THE THOMPSON BOAT CENTER ACCESS ROAD BRIDGE OVER ROCK CREEK
DETAILS

NPS	REG	STATE	PROJECT	SHEET NO.	TOTAL SHEETS
821 / 41920	NC	DC	PRA-ROCR 3A5.204(1)	47	139

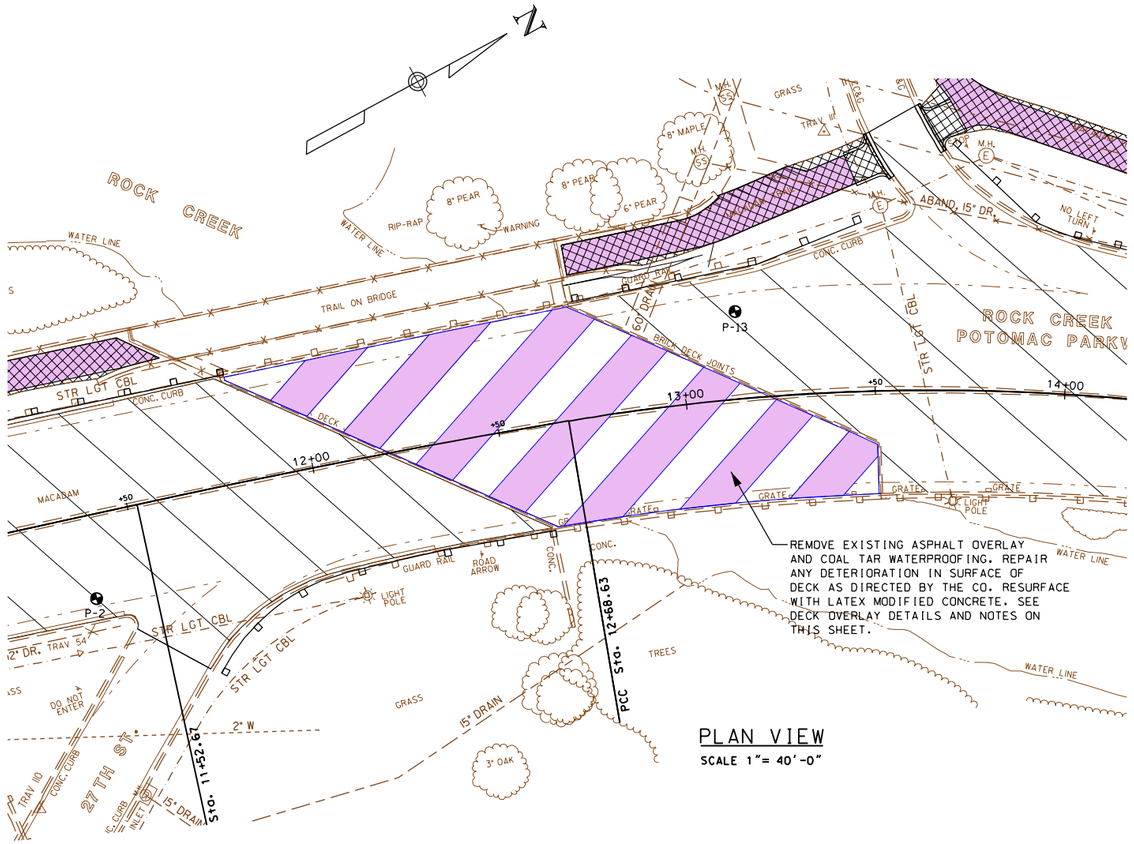

PLAN VIEW

SCALE 1"= 40'-0"

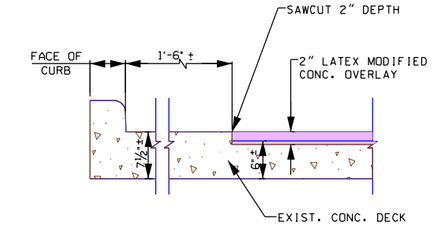

DECK OVERLAY AT CURBS

SCALE 1/2"= 1'-0"

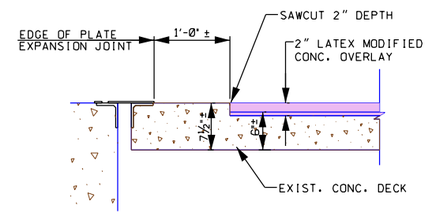

DECK OVERLAY AT EXPANSION JOINTS

SCALE 1/2"= 1'-0"

NOTES:

1. THE EXISTING ASPHALT WEARING SURFACE AND THE COAL TAR WATERPROOFING LAYER SHALL BE REMOVED BY MILLING UNLESS ANOTHER METHOD IS APPROVED BY THE CO. SEE SCR SECTION 203. THE REMOVAL OF THE EXISTING BRIDGE WEARING SURFACE AND THE PLACING OF THE LATEX MODIFIED CONCRETE OVERLAY WILL BE DONE IN THREE SEPARATE CONSTRUCTION STAGES. SAW CUT IN A NEAT STRAIGHT LINE AT THE LIMIT OF THE LATEX MODIFIED CONCRETE OVERLAY IN EACH CONSTRUCTION STAGE.

2. AFTER THE EXISTING WEARING SURFACE HAS BEEN REMOVED. THE CONTRACTOR SHALL INSPECT THE EXPOSED SURFACE OF THE CONCRETE DECK TO DETERMINE THE TYPE AND EXTENT OF ANY REPAIRS NEEDED TO THE CONCRETE DECK. THE CONTRACTOR SHALL PREPARE A CONDITION REPORT TO BE SUBMITTED TO THE CO FOR APPROVAL OF ANY NEEDED REPAIRS. SEE SCR SECTION 203.

3. NEEDED CONCRETE DECK REPAIRS SHALL BE PREFORMED AS SHOWN ON THE DETAIL LOCATED ON THIS SHEET. SHOULD NEEDED REPAIRS BE FOUND THAT ARE MORE EXTENSIVE THAN SHOWN ON THIS DETAIL. THE CONTRACTOR SHALL SUBMIT HIS PROPOSED METHOD OF REPAIR TO THE CO FOR APPROVAL.

4. THE REMOVAL OF LOOSE OR DETERIORATED CONCRETE REQUIRED FOR THE REPAIRS OF THE DECK SHALL BE PERFORMED IN ACCORDANCE WITH SCR SECTION 203.

5. SEE SCR SECTION 552 REGARDING PLACING OF THE LATEX MODIFIED CONCRETE OVERLAY.

6. THE LATEX MODIFIED CONCRETE OVERLAY IN EACH STAGE OF CONSTRUCTION SHALL BE PLACED IN ONE CONTINUOUS POUR. NO TRANSVERSE JOINTS WILL BE PERMITTED.

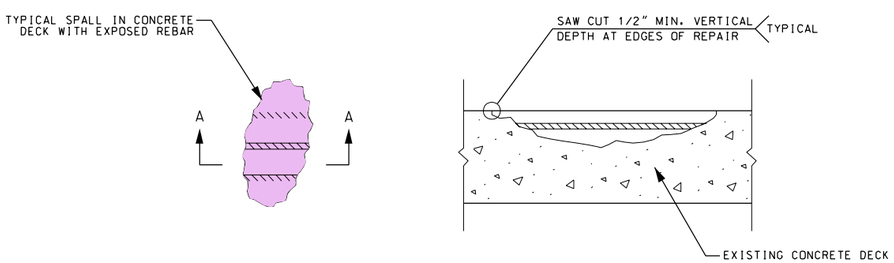

PLAN VIEW

SECTION A-A

1. REMOVE LOOSE DETERIORATED CONCRETE TO SOUND CONCRETE.
2. CLEAN EXPOSED CONCRETE AND REINFORCING STEEL.
3. APPLY PROTECTIVE COATING TO REINFORCING STEEL.
4. REPAIR SPALLS: SEE SCR SECTION 552.11(a)

TYPICAL CONCRETE DECK REPAIR

NOT TO SCALE

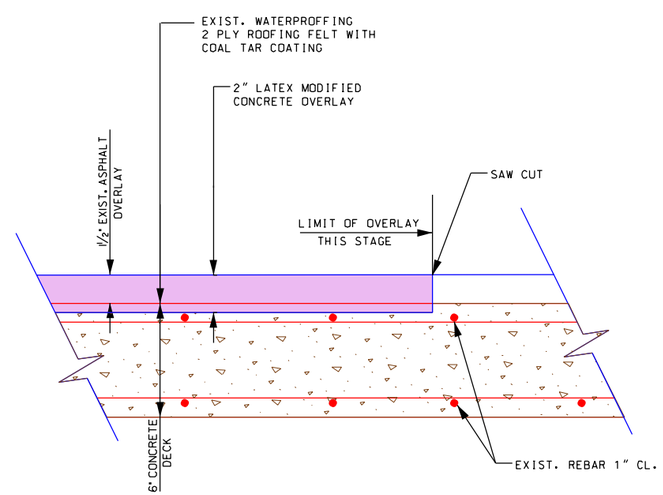

DECK OVERLAY DETAIL

SCALE $1\frac{1}{2}$" = 1'-0"

LEGEND

- FULL DEPTH PAVEMENT OR HMA HIKER/BIKER TRAIL
- MILLING & RESURFACING
- REMOVAL OF EXISTING PAVEMENT
- REMOVAL OF BRIDGE ASPHALT PAVEMENT AND RESURFACING WITH LATEX MODIFIED CONCRETE

U.S. DEPARTMENT OF TRANSPORTATION
FEDERAL HIGHWAY ADMINISTRATION
EASTERN FEDERAL LANDS HIGHWAY DIVISION
STERLING, VIRGINIA

ROCK CREEK AND POTOMAC PARKWAY

REPAIRS TO "L" STREET BRIDGE
PLAN AND DETAILS

9/7/2006 2:26:21 PM M:\Projects\rocr\3a5_204\proj_dev\Cadd\REVISED_s104rock.dgn

NPS	REG	STATE	PROJECT	SHEET NO.	TOTAL SHEETS
821 41920	NC	DC	PRA-ROCR 3A5.204(1)	48	139

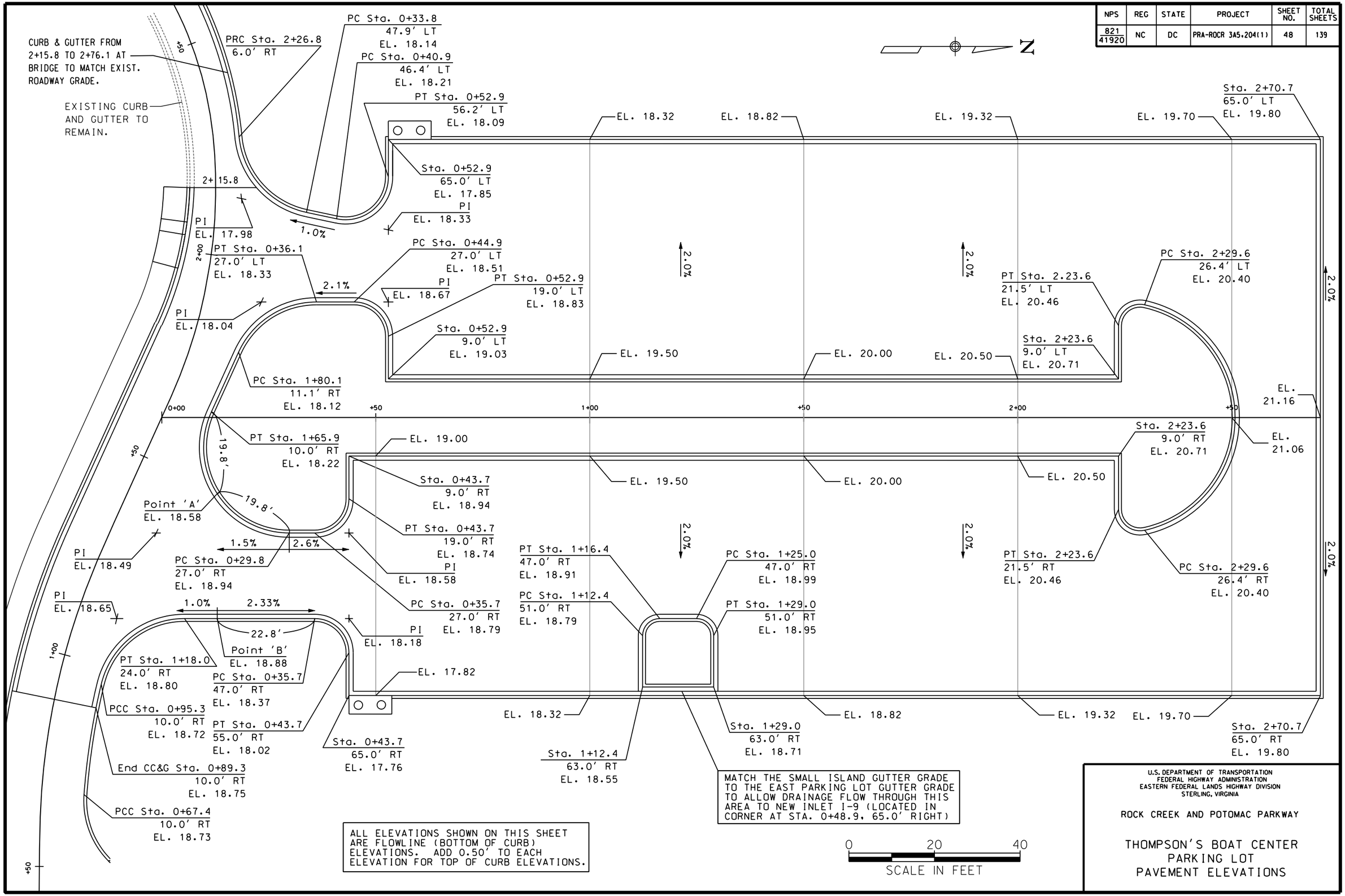

U.S. DEPARTMENT OF TRANSPORTATION
FEDERAL HIGHWAY ADMINISTRATION
EASTERN FEDERAL LANDS HIGHWAY DIVISION
STERLING, VIRGINIA

ROCK CREEK AND POTOMAC PARKWAY

THOMPSON'S BOAT CENTER
PARKING LOT
PAVEMENT ELEVATIONS

NPS	REG	STATE	PROJECT	SHEET NO.	TOTAL SHEETS
821 41920	NC	DC	PRA-ROCR 3A5.204(1)	49	139

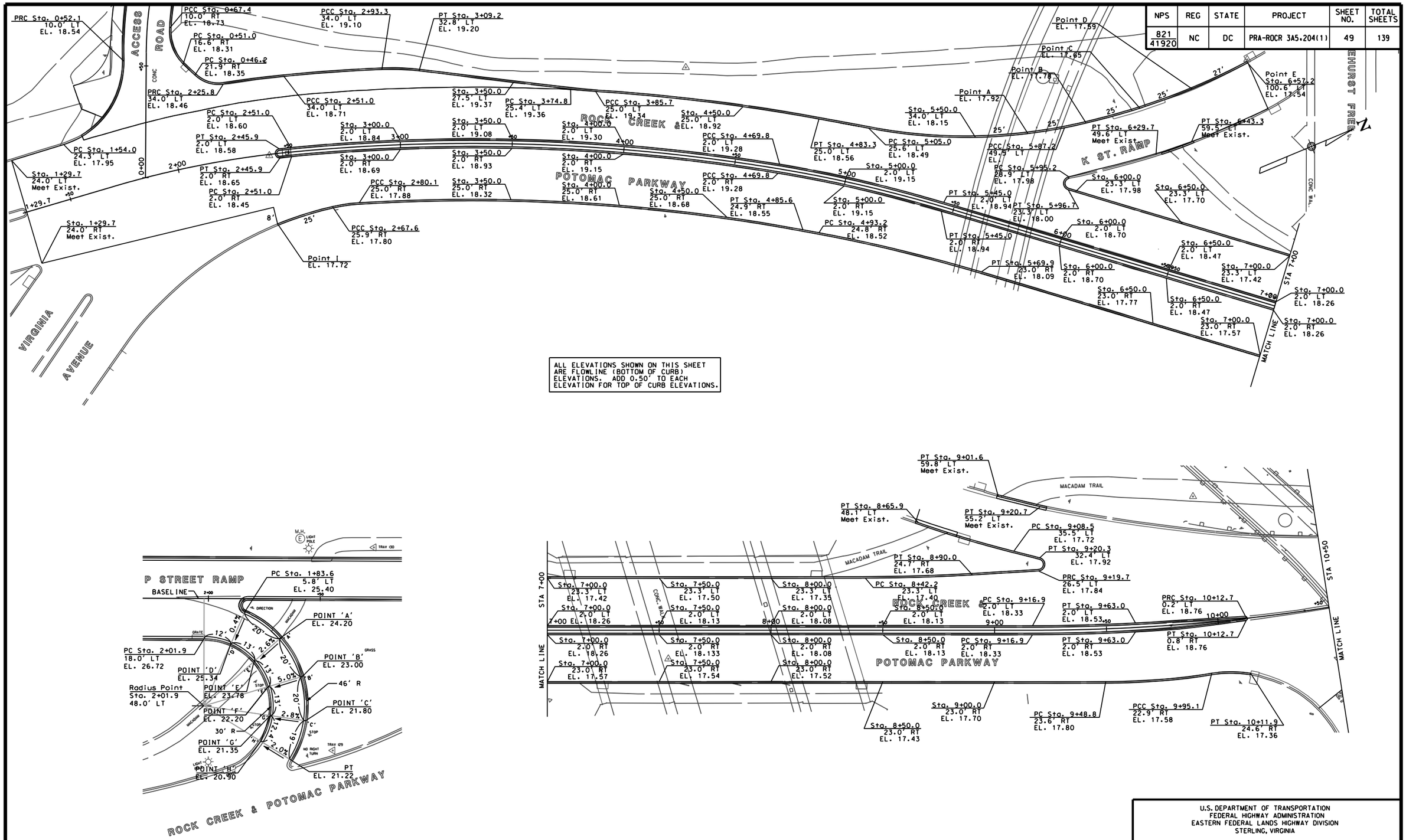

U.S. DEPARTMENT OF TRANSPORTATION
FEDERAL HIGHWAY ADMINISTRATION
EASTERN FEDERAL LANDS HIGHWAY DIVISION
STERLING, VIRGINIA

ROCK CREEK AND POTOMAC PARKWAY

ROCK CREEK & POTOMAC PARKWAY
P STREET RAMP
PAVEMENT ELEVATIONS

NPS	REG	STATE	PROJECT	SHEET NO.	TOTAL SHEETS
821 41920	NC	DC	PRA-ROCR 3A5. 204(1)	50	139

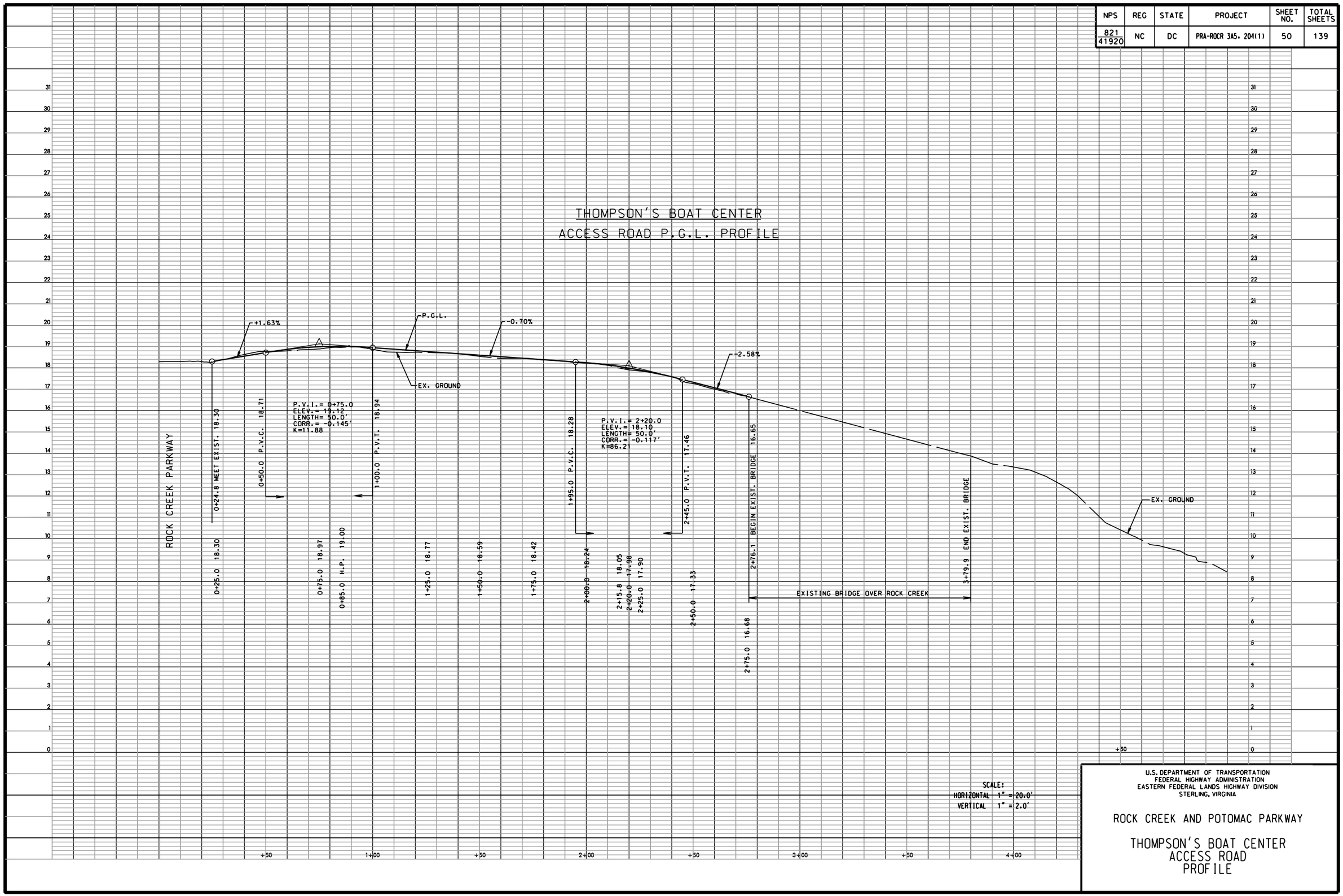

U.S. DEPARTMENT OF TRANSPORTATION
FEDERAL HIGHWAY ADMINISTRATION
EASTERN FEDERAL LANDS HIGHWAY DIVISION
STERLING, VIRGINIA

ROCK CREEK AND POTOMAC PARKWAY

THOMPSON'S BOAT CENTER
ACCESS ROAD
PROFILE

NPS	REG	STATE	PROJECT	SHEET NO.	TOTAL SHEETS
821 41920	NC	DC	PRA-ROCR 3A5. 204(1)	51	139

THOMPSON'S BOAT CENTER
PARKING LOT P.G.L. PROFILE

SCALE:
HORIZONTAL 1" = 20.0'
VERTICAL 1" = 2.0'

U.S. DEPARTMENT OF TRANSPORTATION
FEDERAL HIGHWAY ADMINISTRATION
EASTERN FEDERAL LANDS HIGHWAY DIVISION
STERLING, VIRGINIA

ROCK CREEK AND POTOMAC PARKWAY

THOMPSON'S BOAT CENTER
PARKING LOT
PROFILE

NPS	REG	STATE	PROJECT	SHEET NO.	TOTAL SHEETS
821 41920	NC	DC	PRA-ROCR 3A5. 204(1)	52	139

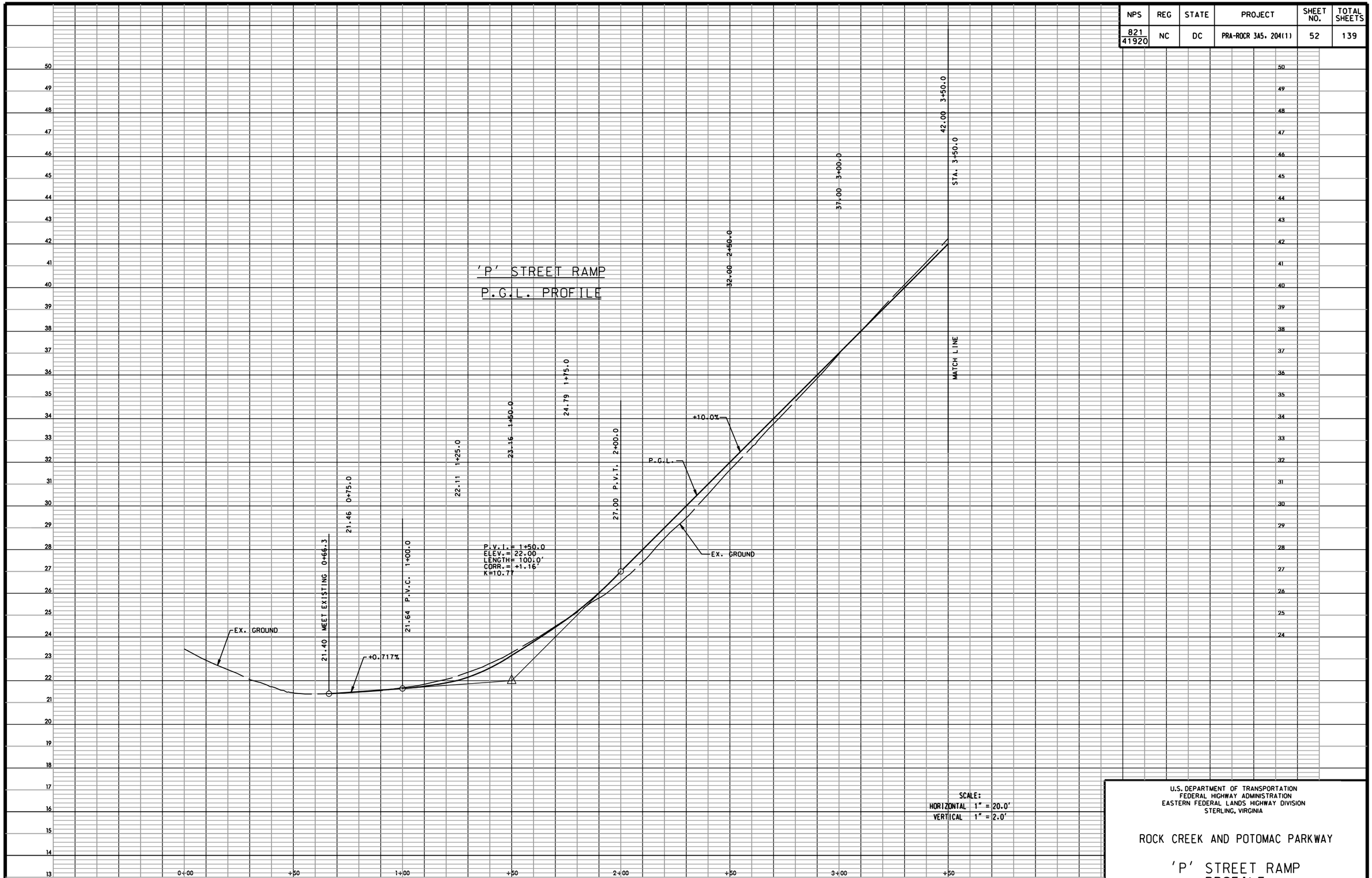

U.S. DEPARTMENT OF TRANSPORTATION
FEDERAL HIGHWAY ADMINISTRATION
EASTERN FEDERAL LANDS HIGHWAY DIVISION
STERLING, VIRGINIA

ROCK CREEK AND POTOMAC PARKWAY

'P' STREET RAMP
PROFILE
FROM STA. 0+66.3 TO STA. 3+50.0

NPS	REG	STATE	PROJECT	SHEET NO.	TOTAL SHEETS
821 41920	NC	DC	PRA-ROCR 3A5. 204(1)	53	139

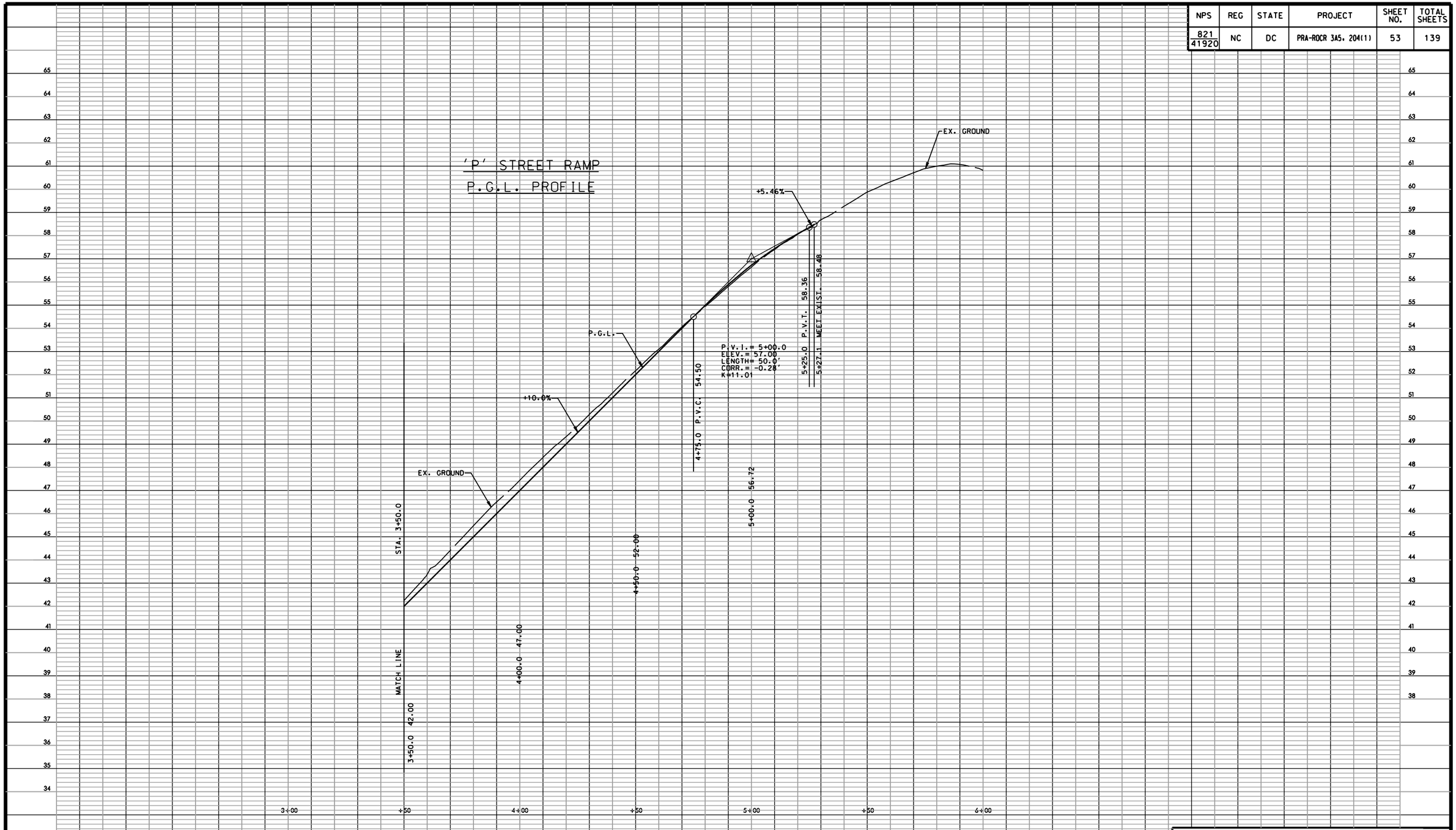

SCALE:
HORIZONTAL 1" = 20.0'
VERTICAL 1" = 2.0'

U.S. DEPARTMENT OF TRANSPORTATION
FEDERAL HIGHWAY ADMINISTRATION
EASTERN FEDERAL LANDS HIGHWAY DIVISION
STERLING, VIRGINIA

ROCK CREEK AND POTOMAC PARKWAY

'P' STREET RAMP
PROFILE
FROM STA. 3+50.0 TO STA. 5+27.1

NPS	REG	STATE	PROJECT	SHEET NO.	TOTAL SHEETS
821 41920	NC	DC	PRA-ROCR 3A5.204(1)	54	139

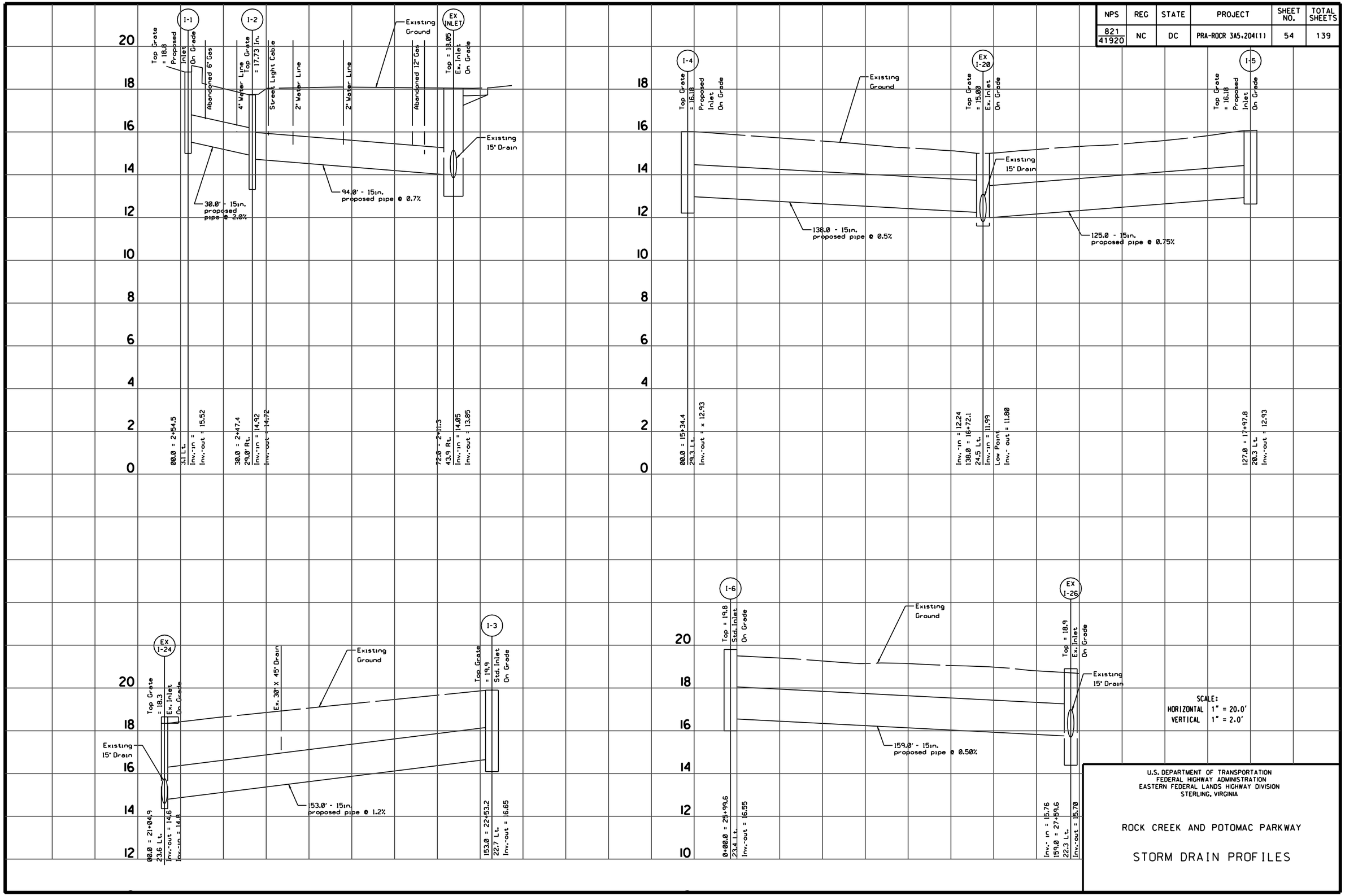

U.S. DEPARTMENT OF TRANSPORTATION
FEDERAL HIGHWAY ADMINISTRATION
EASTERN FEDERAL LANDS HIGHWAY DIVISION
STERLING, VIRGINIA

ROCK CREEK AND POTOMAC PARKWAY

STORM DRAIN PROFILES

SEQUENCE OF CONSTRUCTION

THE PROJECT WILL BE CONSTRUCTED IN FOUR (4) STAGES AS DESCRIBED BELOW. THE TRAFFIC CONTROL PLANS INCLUDED IN THESE DOCUMENTS REFLECT THE FOUR STAGES OF CONSTRUCTION. EXCEPT FOR STAGE 3 AND STAGE 4, ONLY ONE LANE ON THE ROCK CREEK PARKWAY MAY BE CLOSED TO TRAFFIC AT ANY ONE TIME DURING THE CONSTRUCTION PERIOD. DURING STAGE 3, TWO LANES OF THE PARKWAY MAY BE CLOSED FROM VIRGINIA AVE. TO APPROXIMATELY STATION 14+00. DURING STAGE 4, TWO LANES OF THE PAKWAY MAY BE CLOSED TO TRAFFIC ON WEEKENDS ONLY, CONCURRENT WITH THE MILLING AND OVERLAYING OF THE PARKWAY AND THE RAMP TERMINALS.

STAGE 1 THIS STAGE CONSISTS OF ALL THE NEW CONSTRUCTION ON THE WEST SIDE OF THE ROCK CREEK PARKWAY FROM VIRGINIA AVE. TO P STREET EXCEPT THE MILLING AND OVERLAYING OF THE PARKWAY AND THE RAMP TERMINALS. IT INCLUDES ALL OF THE WORK AT THE THOMPSON BOAT CENTER, PARKING LOT, AND ACCESS ROAD AND THE LATEX MODIFIED CONCRETE OVERLAY ON THE RIGHT SOUTHBOUND LANE OF THE L STREET BRIDGE.

DURING THIS STAGE THE RIGHT SOUTHBOUND LANE OF THE PARKWAY MAY BE CLOSED FROM VIRGINIA AVE. TO P STREET EXCEPT AT RAMP TERMINALS WHERE LIMITED ACCESS MUST BE MAINTAINED AT ALL TIMES. AT THE K STREET RAMP, CONSTRUCTION OF THE CURBS AND GUTTERS AND WHEELCHAIR RAMPS WILL REQUIRE A REDUCTION IN THE LANE WIDTH. A MINIMUM WIDTH OF 10 FEET MUST BE MAINTAINED. CONSTRUCTION OF CURBS AND GUTTERS AND WHEELCHAIR RAMPS AT THE PENNSYLVANIA AVE. RAMP THAT WILL INTERFERE WITH TRAFFIC MUST BE PERFORMED ON A WEEKEND DURING WHICH TIME THE RAMP MAY BE CLOSED. AT P STREET, THE RAMP RECONSTRUCTION MUST BE PERFORMED IN TWO PHASES SO THAT TRAFFIC, EITHER ENTERING THE PARKWAY DURING PHASE III, OR EXITING THE PARKWAY DURING PHASE IV WILL BE MAINTAINED AT ALL TIMES.

AT THE THOMPSON BOAT CENTER, THE PARKING LOT AND THE ACCESS ROAD SHALL BE CONSTRUCTED IN TWO SEPARATE PHASES. THE PARKING LOT SHALL BE CONSTRUCTED ONE-HALF AT A TIME TO ALLOW PARKING ON THE PART OF THE LOT NOT UNDER CONSTRUCTION. DURING THIS TIME, ACCESS TO THE PARKING LOT AND TO THE THOMPSON BOAT CENTER SHALL BE MAINTAINED VIA THE EXISTING ACCESS ROAD.

THE SECOND PHASE OF CONSTRUCTION AT THE TBC (THE ACCESS ROAD CONSTRUCTION) MUST OCCUR BETWEEN NOVEMBER 1 AND NOVEMBER 30. DURING THIS TIME, THE ACCESS ROAD AND PARKING LOT WILL BE CLOSED TO VEHICULAR TRAFFIC. PEDESTRIAN MOVEMENTS SHALL NOT BE IMPEDED. SEE STAGE I, PHASE II OF THE CONSTRUCTION TRAFFIC CONTROL PLAN.

STAGE 2 THIS STAGE CONSISTS OF ALL OF THE NEW CONSTRUCTION ON THE EAST OF THE ROCK CREEK PARKWAY FROM VIRGINIA AVE. TO P STREET EXCEPT THE MILLING AND OVERLAYING OF THE PARKWAY AND THE RAMP TERMINALS. THIS STAGE ALSO INCLUDES THE LATEX MODIFIED CONCRETE OVERLAY ON THE RIGHT NORTHBOUND LANE OF THE L STREET BRIDGE.

DURING THIS STAGE THE RIGHT NORTHBOUND LANE OF THE PARKWAY MAY BE CLOSED FROM VIRGINIA AVE. TO P STREET EXCEPT AT RAMP TERMINALS WHERE ACCESS MUST MAINTAINED AT ALL TIMES.

STAGE 3 THIS STAGE CONSISTS OF THE CONSTRUCTION OF THE NEW MEDIAN ON THE ROCK CREEK PARKWAY AND ASSOCIATED DRAINAGE SYSTEMS FROM VIRGINIA AVE. TO STATION 10+50 AND THE LATEX MODIFIED CONCRETE OVERLAY ON THE INSIDE LANES OF THE L STREET BRIDGE.

DURING THIS STAGE BOTH MEDIAN LANES OF THE PARKWAY FROM VIRGINIA AVE. TO APPROXIMATELY STATION 14+00 MAY BE CLOSED.

STAGE 4 THIS STAGE CONSISTS OF THE MILLING AND PAVING OF THE PARKWAY FROM VIRGINIA AVE. TO 'P' STREET AND THE RAMP TERMINALS AS SHOWN ON THE PLANS. THIS STAGE ALSO INCLUDES THE REPAIR OF THE PORTLAND CEMENT CONCRETE BASE. SEE SCR SECTION 501, ACCELERATED FULL-DEPTH PATCHING. THIS WORK SHALL BE DONE DURING THE WEEKENDS. A TOTAL OF FOUR (4) WEEKENDS WILL BE ALLOWED FOR THE MILLING AND PAVING OPERATIONS.

DURING THIS STAGE, TWO LANES OF THE PARKWAY MAY BE CLOSED. SEE PARTIAL ROADWAY CLOSURE DETAIL, SHEET E635-C. ALSO SEE GENERAL NOTE 9 ON THIS SHEET.

NOTE: THE WEEKEND IS DEFINED AS THE PERIOD FROM 7 PM FRIDAY TO 5 AM MONDAY.
NIGHTTIME HOURS ARE DEFINED AS THE HOURS BETWEEN 7 PM AND 5 AM THE FOLLOWING DAY.
SEE SCR SECTIONS 203 AND 552 FOR RESTRICTIONS CONCERNING THE PLACING OF LATEX MODIFIED CONCRETE OVERLAY ON THE L STREET BRIDGE.

GENERAL NOTES

1. THE CONTRACTOR WILL BE REQUIRED TO HAVE VMS SIGNING IN PLACE A MINIMUM OF TWO WEEKS PRIOR TO ANY CHANGES IN TRAFFIC CONTROL.
2. MAINTAIN A MINIMUM LANE WIDTH OF 10 FEET AT ALL TIMES DURING CONSTRUCTION.
3. MAINTAIN ACCESS TO RAMPS EXCEPT ON RAMP TO PENNSYLVANIA AVE. AT ALL TIMES DURING CONSTRUCTION.
4. ALL SIGN PLACEMENTS ARE SUBJECT TO APPROVAL BY THE CONTRACTING OFFICER (CO).
5. ALL TRAFFIC CONTROL SIGNS ARE TO CONFORM TO THE LATEST EDITION OF THE M.U.T.C.D.
6. ALL TRAFFIC CONTROL DEVICES ARE REQUIRED TO BE MAINTAINED ACCORDING TO THE SPECIFICATIONS.
7. THE CO MAY ORDER WORK TO BE STOPPED DURING OTHER EVENTS WITH HIGH VOLUMES OF PEDESTRIANS NEAR THE PROJECT SITE.
8. IN-ORDER TO MINIMIZE THE LENGTH OF TIME OF ROAD CLOSURES AND LANE CLOSURES. THE CONTRACTOR SHALL MAKE A CONCERTED EFFORT TO KEEP CONSTRUCTION ACTIVITIES CONTINUOUS AT THE CLOSED SITE DURING THE NORMAL WORK WEEK.
9. RAMPS ENTERING THE PARKWAY IN THE IMMEDIATE WORK AREA OF THE MILLING AND PAVING OPERATIONS MAY BE CLOSED TEMPORARILY.

U.S. DEPARTMENT OF TRANSPORTATION
FEDERAL HIGHWAY ADMINISTRATION
EASTERN FEDERAL LANDS HIGHWAY DIVISION
STERLING, VIRGINIA

ROCK CREEK AND POTOMAC PARKWAY

CONSTRUCTION TRAFFIC CONTROL NOTES AND SEQUENCE OF CONSTRUCTION

9/17/2006 2:27:25 PM M:\Projects\rocr\3a5_204\proj_dev\Cadd\REVISED_tp01rocn.dgn

NPS	REG	STATE	PROJECT	SHEET NO.	TOTAL SHEETS
821 / 41920	NC	DC	PRA-ROCR 3A5.204(1)	56	139

1 2

W21-1a
36" x 36"

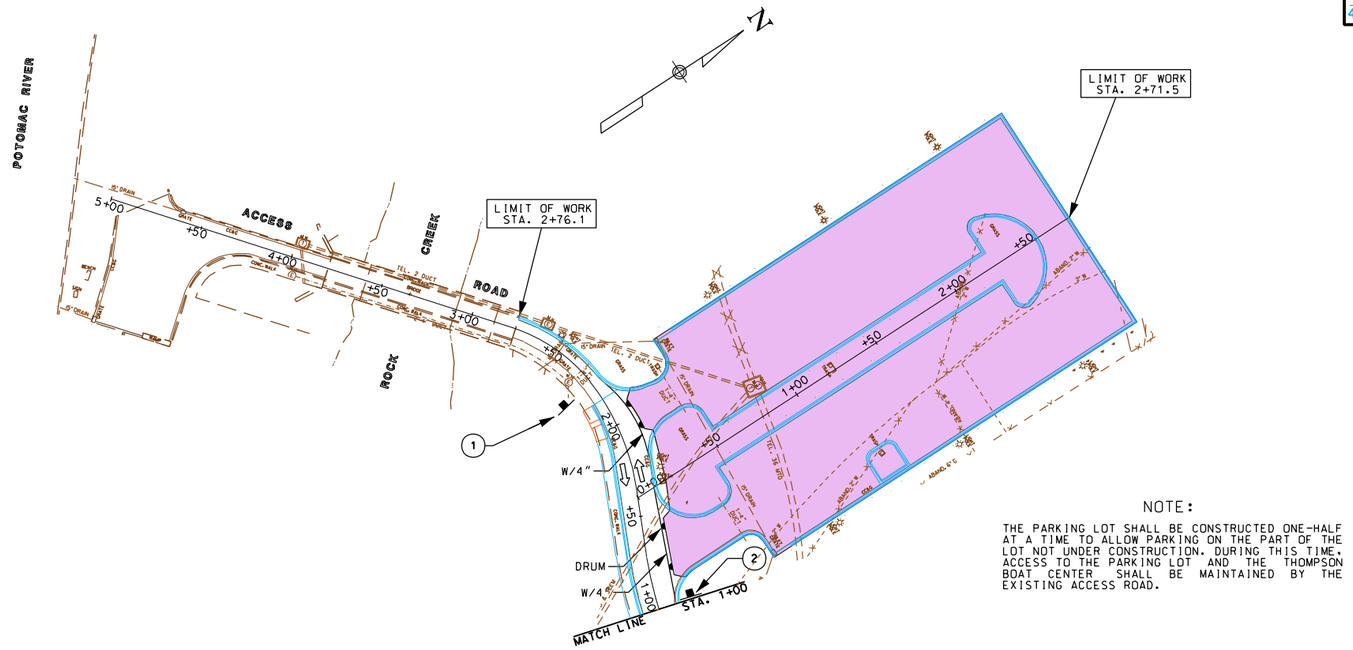

NOTE:

THE PARKING LOT SHALL BE CONSTRUCTED ONE-HALF AT A TIME TO ALLOW PARKING ON THE PART OF THE LOT NOT UNDER CONSTRUCTION. DURING THIS TIME, ACCESS TO THE PARKING LOT AND THE THOMPSON BOAT CENTER SHALL BE MAINTAINED BY THE EXISTING ACCESS ROAD.

STAGE I, PHASE I

1 2 3

G95-2
132" x 78"

4 5 6

R11-2
48" x 30"
MOUNTED ON A
TYPE III BARRICADE

NOTE:

THE RECONSTRUCTION OF THE ACCESS ROAD SHALL BE PERFORMED DURING THE PERIOD FROM NOVEMBER 1 TO NOVEMBER 30. DURING THIS TIME THE ACCESS ROAD SHALL BE CLOSED TO VEHICULAR TRAFFIC. PEDESTRIAN MOVEMENTS SHALL NOT BE IMPEDED.

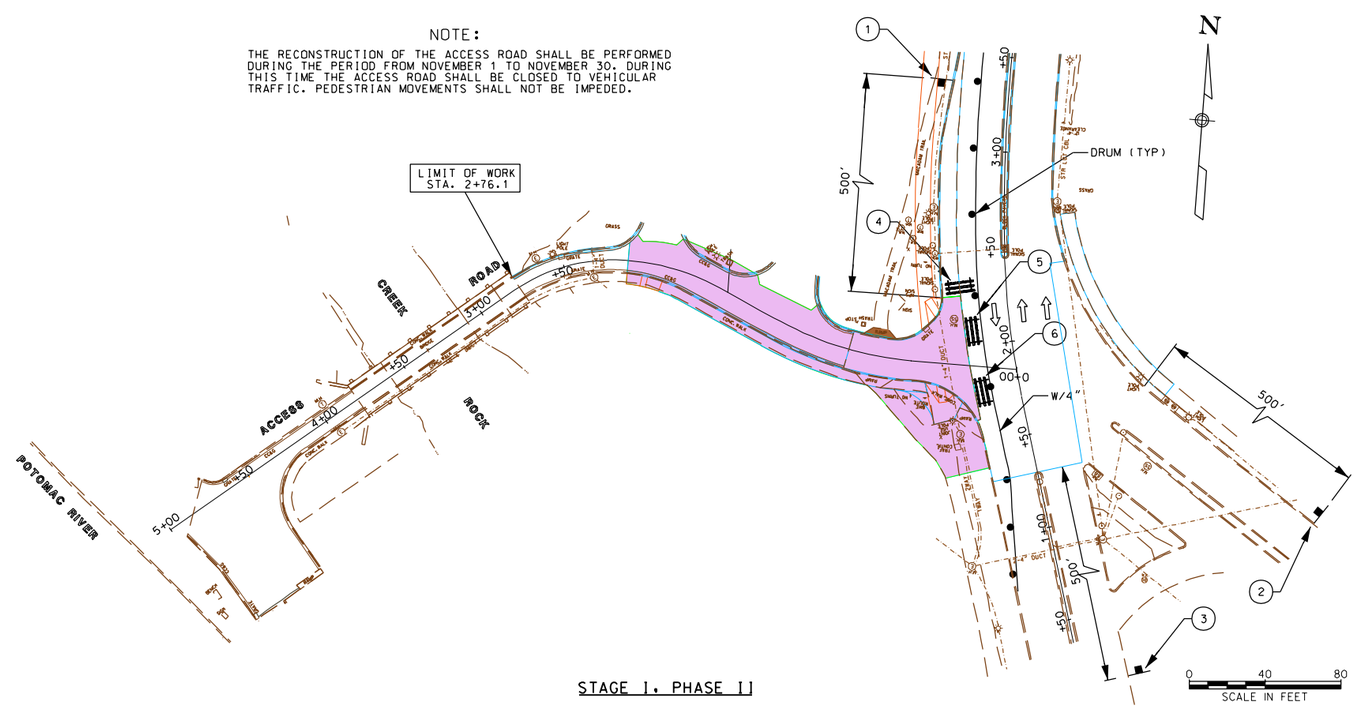

STAGE I, PHASE II

- CONSTRUCTION / WORK ZONE
- CHANNELIZING DEVICES (DRUMS)
- W/4" — SOLID WHITE PAVEMENT MARKING 4" WIDTH
- Y/4" — SOLID YELLOW PAVEMENT MARKING 4" WIDTH
- TRAFFIC FLOW ARROW
- SIGN MOUNTED ON WOOD POST
- NARROW CRASH CUSHION (REFER TO SCR SECTION 635.19)
- TEMPORARY CONCRETE BARRIER
- TYPE III BARRICADES
- ARROW PANEL
- VARIABLE MESSAGE SIGN

U.S. DEPARTMENT OF TRANSPORTATION
FEDERAL HIGHWAY ADMINISTRATION
EASTERN FEDERAL LANDS HIGHWAY DIVISION
STERLING, VIRGINIA

ROCK CREEK AND POTOMAC PARKWAY

THOMPSON'S BOAT CENTER ACCESS ROAD AND PARKING LOT CONSTRUCTION TRAFFIC CONTROL STAGE I

9/7/2006 2:28:13 PM M:\Projects\rocr\3a5_204\proj_dev\Cadd\REVISED_tp02rocl.dgn

NPS	REG	STATE	PROJECT	SHEET NO.	TOTAL SHEETS
821 41920	NC	DC	PRA-ROCR 3A5.204(1)	57	139

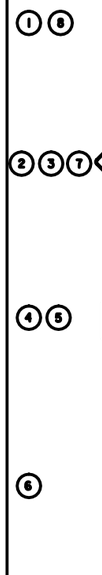

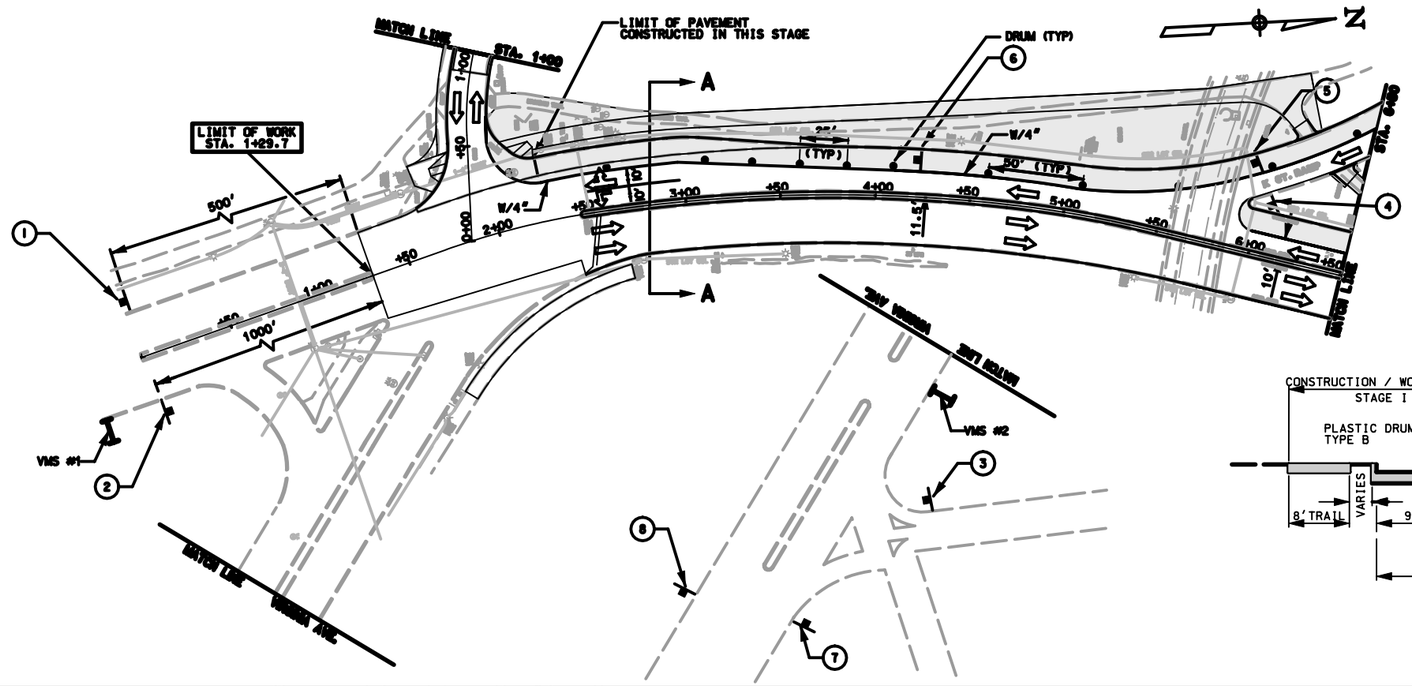

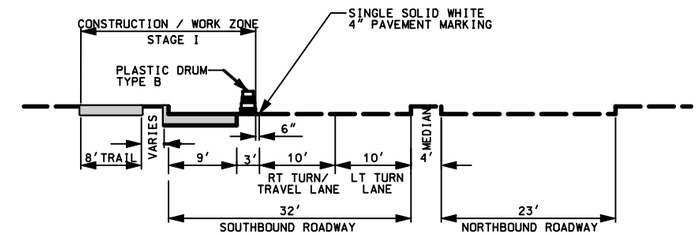

SECTION A-A
SCALE 1" = 10'

NOTE:

USE DETAIL E635-B FOR RIGHT LANE CLOSURE DETAILS.

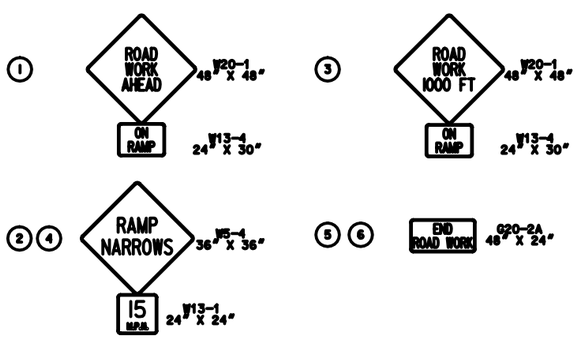

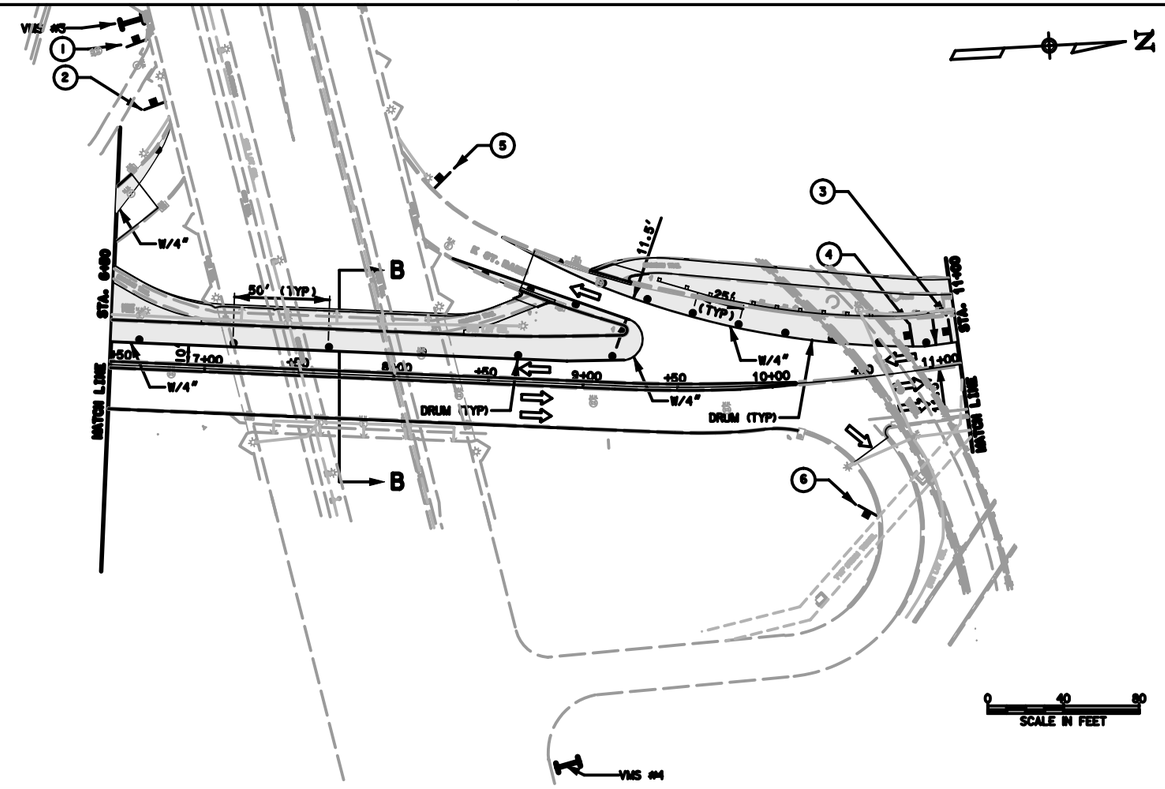

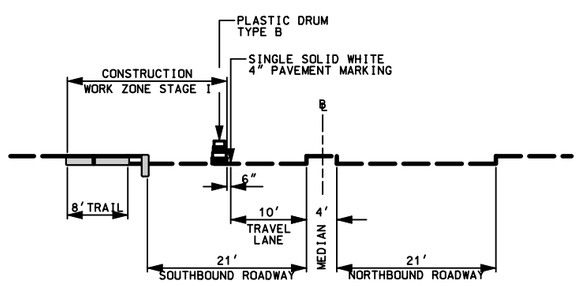

SECTION B-B
SCALE 1" = 10'

- CONSTRUCTION / WORK ZONE
- CHANNELIZING DEVICES (DRUMS)
- W/4" — SOLID WHITE PAVEMENT MARKING 4" WIDTH
- Y/4" — SOLID YELLOW PAVEMENT MARKING 4" WIDTH
- TRAFFIC FLOW ARROW
- SIGN MOUNTED ON WOOD POST
- NARROW GRAVEL CUSHION (REFER TO SCR SECTION 635.19)
- TEMPORARY CONCRETE BARRIER
- TYPE III BARRICADES
- ARROW PANEL
- VARIABLE MESSAGE SIGN

U.S. DEPARTMENT OF TRANSPORTATION
FEDERAL HIGHWAY ADMINISTRATION
EASTERN FEDERAL LANDS HIGHWAY DIVISION
STERLING, VIRGINIA

ROCK CREEK AND POTOMAC PARKWAY
CONSTRUCTION TRAFFIC CONTROL
STAGE I

...\tp03roc1.dgn 8/14/2006 2:09:27 PM

NPS	REG	STATE	PROJECT	SHEET NO.	TOTAL SHEETS
821 41920	NC	DC	PRA-ROCR 3A5.204(1)	58	139

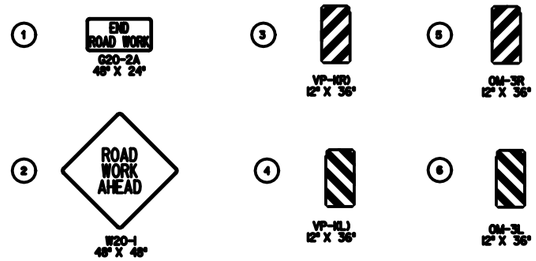

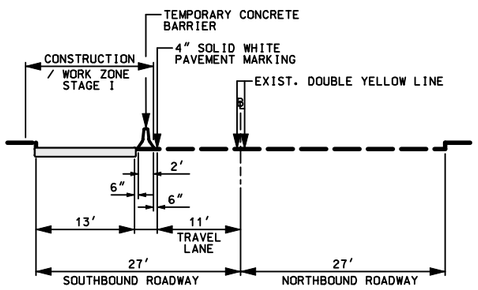

SECTION L ST BRIDGE
SCALE 1" = 10'

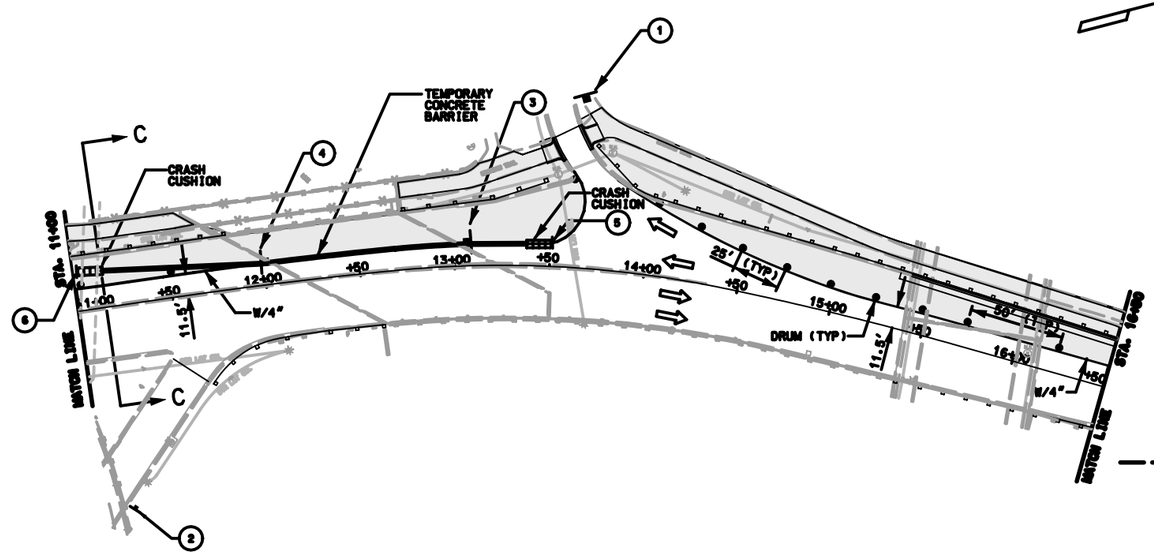

NOTE:

USE DETAIL E635-B FOR RIGHT LANE CLOSURE DETAILS.

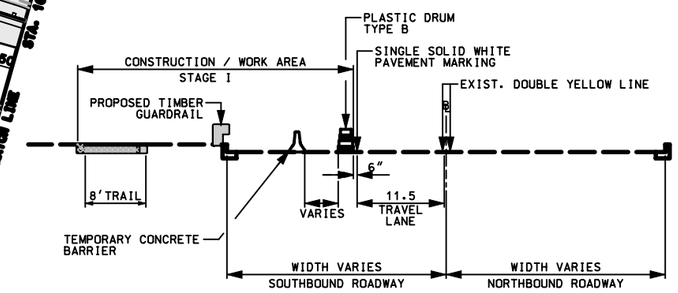

SECTION C-C
SCALE 1" = 10'

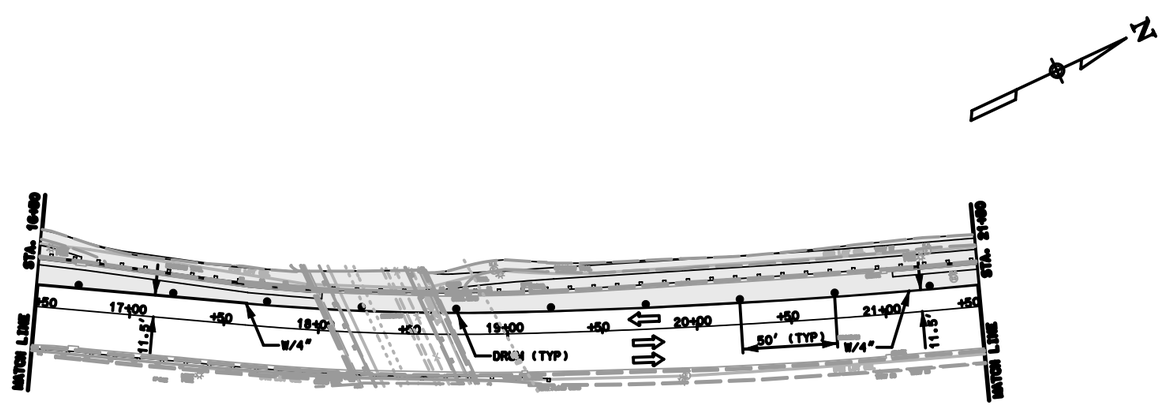

0 40 80
SCALE IN FEET

CONSTRUCTION / WORK ZONE
CHANNELIZING DEVICES (DRUMS)
W/4" SOLID WHITE PAVEMENT MARKING 4" WIDTH
Y/4" SOLID YELLOW PAVEMENT MARKING 4" WIDTH
TRAFFIC FLOW ARROW
SIGN MOUNTED ON WOOD POST
NARROW CRASH CUSHION (REFER TO SCR SECTION 635.19)
TEMPORARY CONCRETE BARRIER
TYPE III BARRICADES
ARROW PANEL
VARIABLE MESSAGE SIGN

U.S. DEPARTMENT OF TRANSPORTATION
FEDERAL HIGHWAY ADMINISTRATION
EASTERN FEDERAL LANDS HIGHWAY DIVISION
STERLING, VIRGINIA

ROCK CREEK AND POTOMAC PARKWAY

CONSTRUCTION TRAFFIC CONTROL STAGE I

NPS	REG	STATE	PROJECT	SHEET NO.	TOTAL SHEETS
821 / 41920	NC	DC	PRA-ROCR 3A5,204(1)	59	139

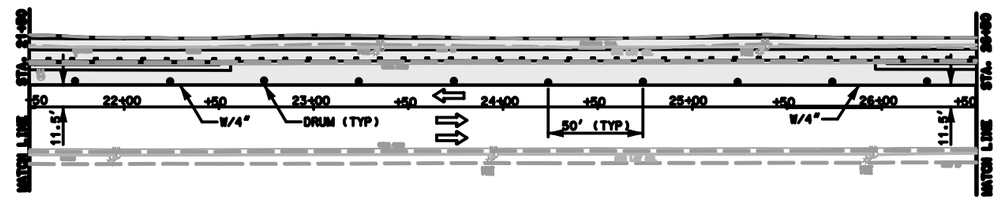

NOTE:

USE DETAIL E635-B FOR RIGHT LANE CLOSURE DETAILS.

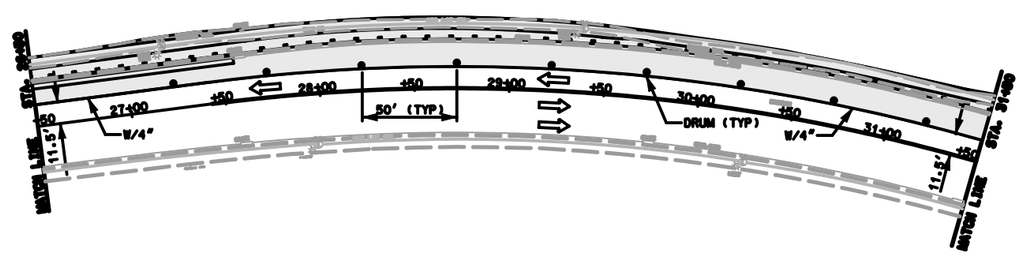

CONSTRUCTION / WORK ZONE

CHANNELIZING DEVICES (DRUMS)

W/4" SOLID WHITE PAVEMENT MARKING 4" WIDTH

Y/4" SOLID YELLOW PAVEMENT MARKING 4" WIDTH

TRAFFIC FLOW ARROW

SIGN MOUNTED ON WOOD POST

MARRIN CRASH CUSHION (REFER TO SCR SECTION 635.19)

TEMPORARY CONCRETE BARRIER

TYPE III BARRICADES

ARROW PANEL

VARIABLE MESSAGE SIGN

0 40 80
SCALE IN FEET

U.S. DEPARTMENT OF TRANSPORTATION
FEDERAL HIGHWAY ADMINISTRATION
EASTERN FEDERAL LANDS HIGHWAY DIVISION
STERLING, VIRGINIA

ROCK CREEK AND POTOMAC PARKWAY

CONSTRUCTION TRAFFIC CONTROL STAGE I

NPS	REG	STATE	PROJECT	SHEET NO.	TOTAL SHEETS
821 / 41920	NC	DC	PRA-ROCR 3A5.204(1)	60	139

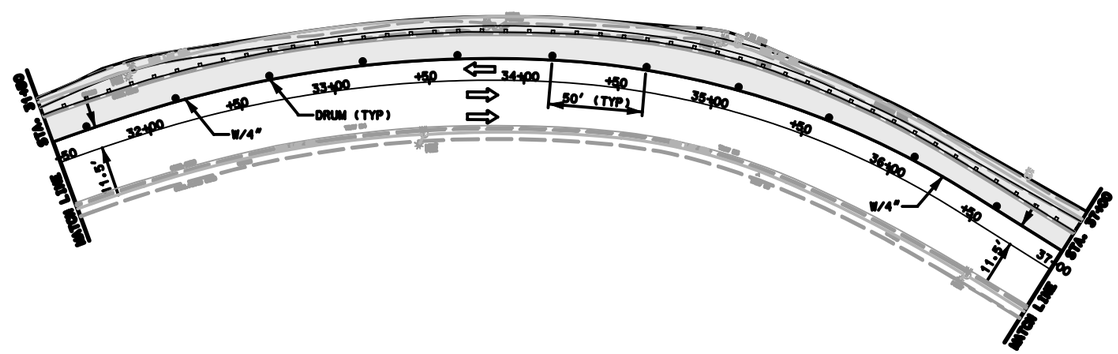

NOTE:

USE DETAIL E635-B FOR RIGHT LANE CLOSURE DETAILS.

CONSTRUCTION / WORK ZONE

CHANNELIZING DEVICES (DRUMS)

W/4" SOLID WHITE PAVEMENT MARKING 4" WIDTH

Y/4" SOLID YELLOW PAVEMENT MARKING 4" WIDTH

TRAFFIC FLOW ARROW

SIGN MOUNTED ON WOOD POST

HARDOX CRASH CUSHION (REFER TO SCH SECTION 635.19)

TEMPORARY CONCRETE BARRIER

TYPE III BARRICADES

ARROW PANEL

VARIABLE MESSAGE SIGN

0 40 80
SCALE IN FEET

U.S. DEPARTMENT OF TRANSPORTATION
FEDERAL HIGHWAY ADMINISTRATION
EASTERN FEDERAL LANDS HIGHWAY DIVISION
STERLING, VIRGINIA

ROCK CREEK AND POTOMAC PARKWAY

CONSTRUCTION TRAFFIC CONTROL
STAGE I

...\tp06roc1.dgn 8/14/2006 2:12:26 PM

NPS	REG	STATE	PROJECT	SHEET NO.	TOTAL SHEETS
821 41920	NC	DC	PRA-ROCR 3A5.204(1)	61	139

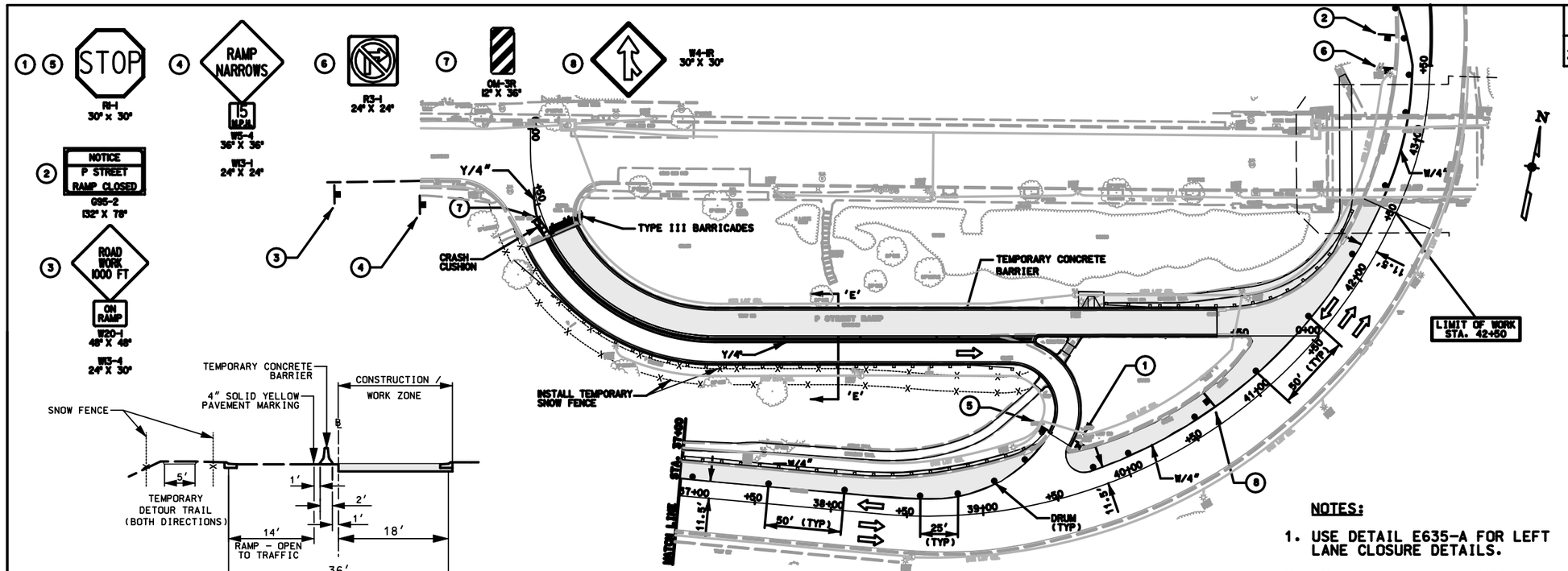

SECTION E-E
SCALE 1" = 10'

STAGE I, PHASE III

NOTES:

1. USE DETAIL E635-A FOR LEFT LANE CLOSURE DETAILS.
2. USE DETAIL E635-B FOR RIGHT LANE CLOSURE DETAILS.

CONSTRUCTION / WORK ZONE
CHANNELIZING DEVICES (DRUMS)
W/4" SOLID WHITE PAVEMENT MARKING 4" WIDTH
Y/4" SOLID YELLOW PAVEMENT MARKING 4" WIDTH
TRAFFIC FLOW ARROW
SIGN MOUNTED ON WOOD POST
HARDEN CRASH CUSHION (REFER TO SCR SECTION 635.19)
TEMPORARY CONCRETE BARRIER
TYPE III BARRICADES
ARROW PANEL
VARIABLE MESSAGE SIGN

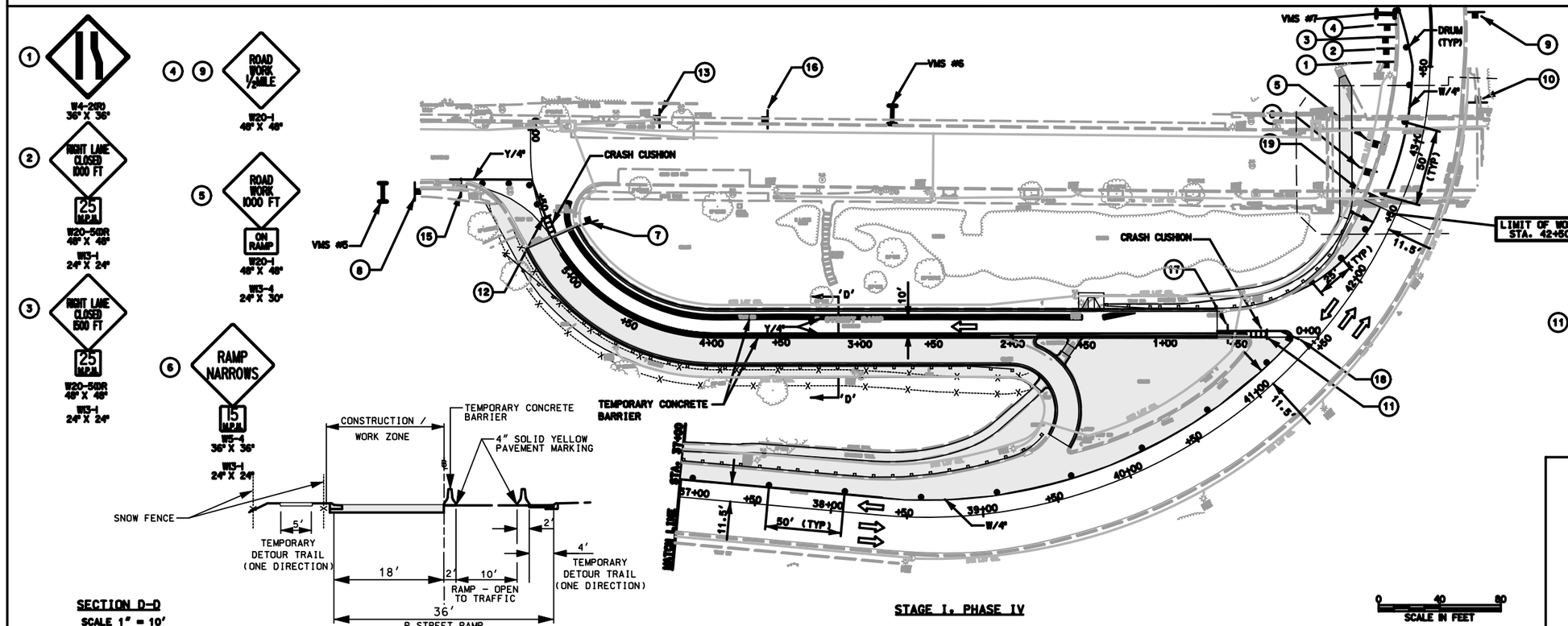

SECTION D-D
SCALE 1" = 10'

STAGE I, PHASE IV

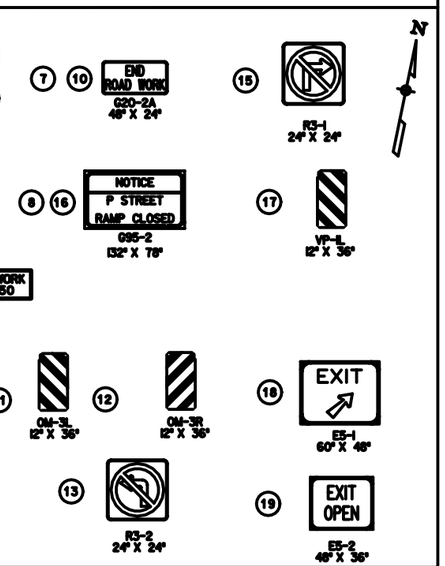

0 40 80
SCALE IN FEET

U.S. DEPARTMENT OF TRANSPORTATION
FEDERAL HIGHWAY ADMINISTRATION
EASTERN FEDERAL LANDS HIGHWAY DIVISION
STERLING, VIRGINIA

ROCK CREEK AND POTOMAC PARKWAY

CONSTRUCTION TRAFFIC CONTROL
STAGE I

...\tp07roc1.dgn 8/14/2006 2:13:16 PM

NPS	REG	STATE	PROJECT	SHEET NO.	TOTAL SHEETS
821 41920	NC	DC	PRA-ROCR 3A5.204(1)	62	139

NOTE:

USE DETAIL E635-B FOR RIGHT LANE CLOSURE DETAILS.

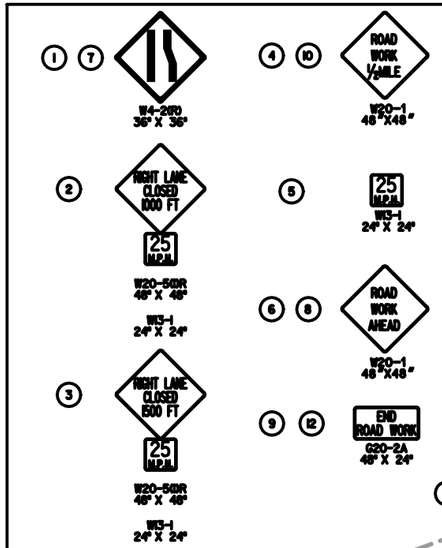

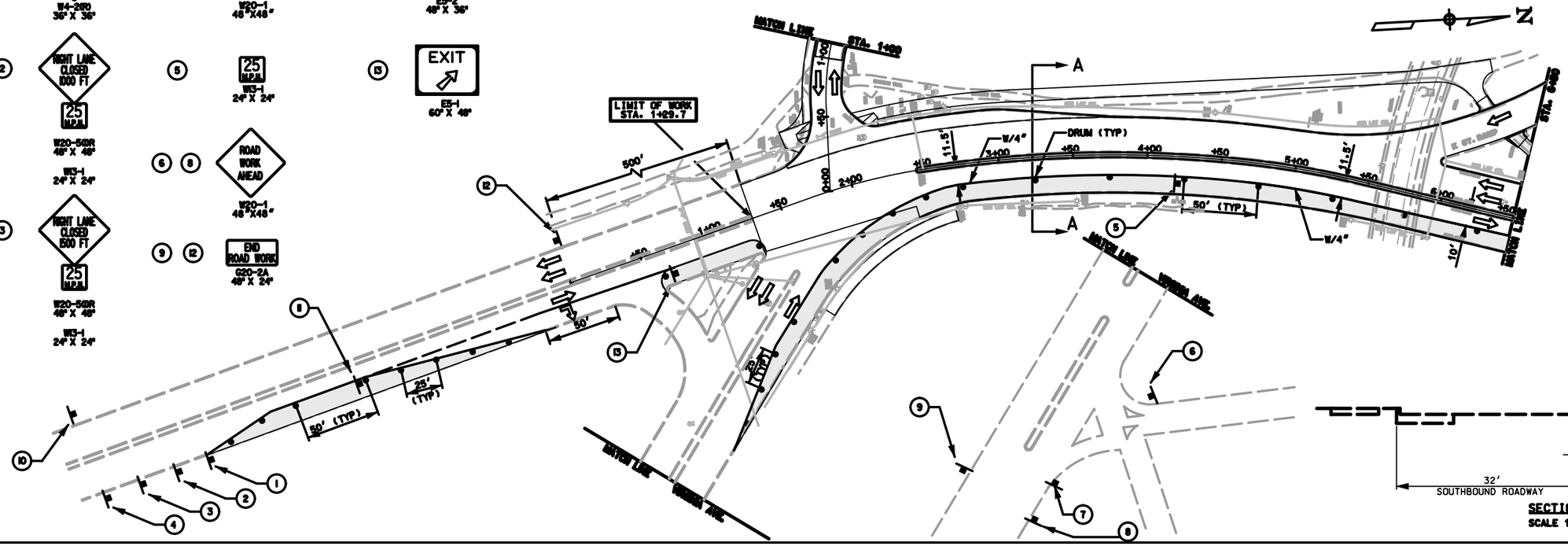

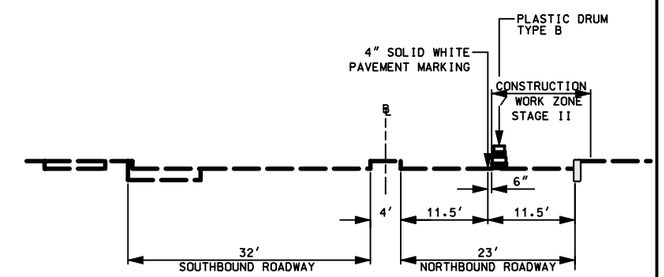

SECTION A-A
SCALE 1" = 10'

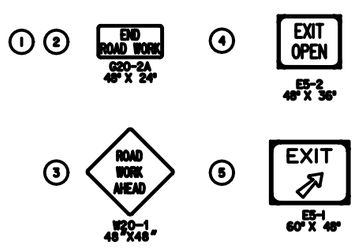

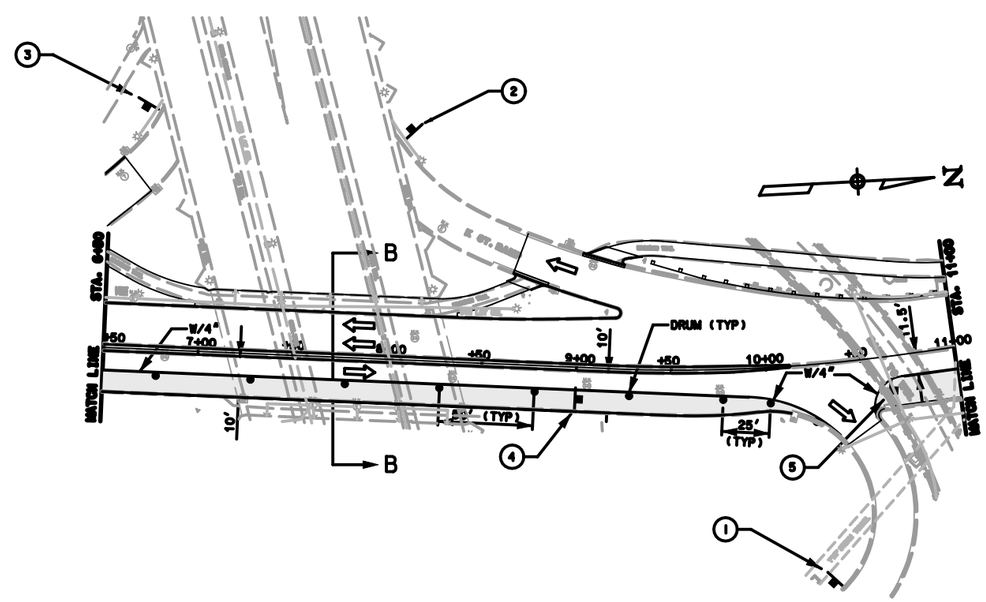

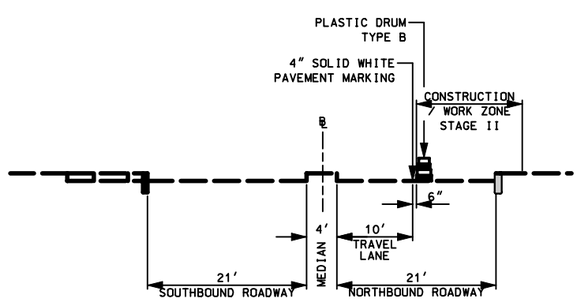

SECTION B-B
SCALE 1" = 10'

	CONSTRUCTION / WORK ZONE
• •	CHANNELIZING DEVICES (DRUMS)
W/4"	SOLID WHITE PAVEMENT MARKING 4" WIDTH
Y/4"	SOLID YELLOW PAVEMENT MARKING 4" WIDTH
⇦	TRAFFIC FLOW ARROW
▬	SIGN MOUNTED ON WOOD POST
▭▭▭	MARROW CRASH CUSHION (REFER TO SCR SECTION 635.19)
▬▬	TEMPORARY CONCRETE BARRIER
▨	TYPE III BARRICADES
○○○	ARROW PANEL
▬	VARIABLE MESSAGE SIGN

0 40 80
SCALE IN FEET

U.S. DEPARTMENT OF TRANSPORTATION
FEDERAL HIGHWAY ADMINISTRATION
EASTERN FEDERAL LANDS HIGHWAY DIVISION
STERLING, VIRGINIA

ROCK CREEK AND POTOMAC PARKWAY

CONSTRUCTION TRAFFIC CONTROL
STAGE II

...\tp08roc2.dgn 8/14/2006 2:14:03 PM

NPS	REG	STATE	PROJECT	SHEET NO.	TOTAL SHEETS
821 / 41920	NC	DC	PRA-ROCR 3A5.204(1)	63	139

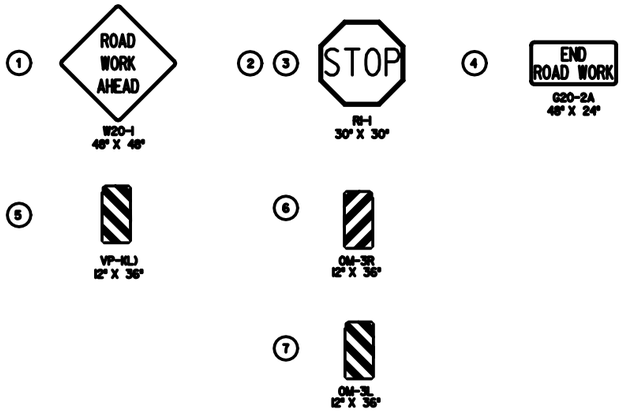

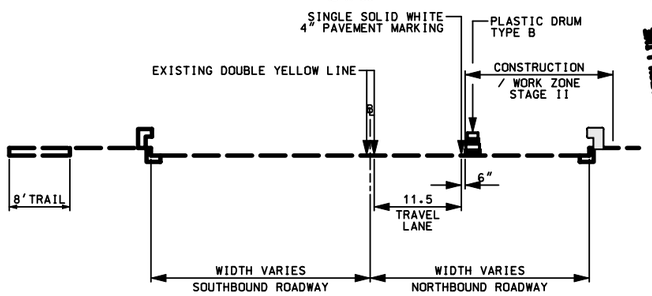

SECTION C-C
SCALE 1" = 10'

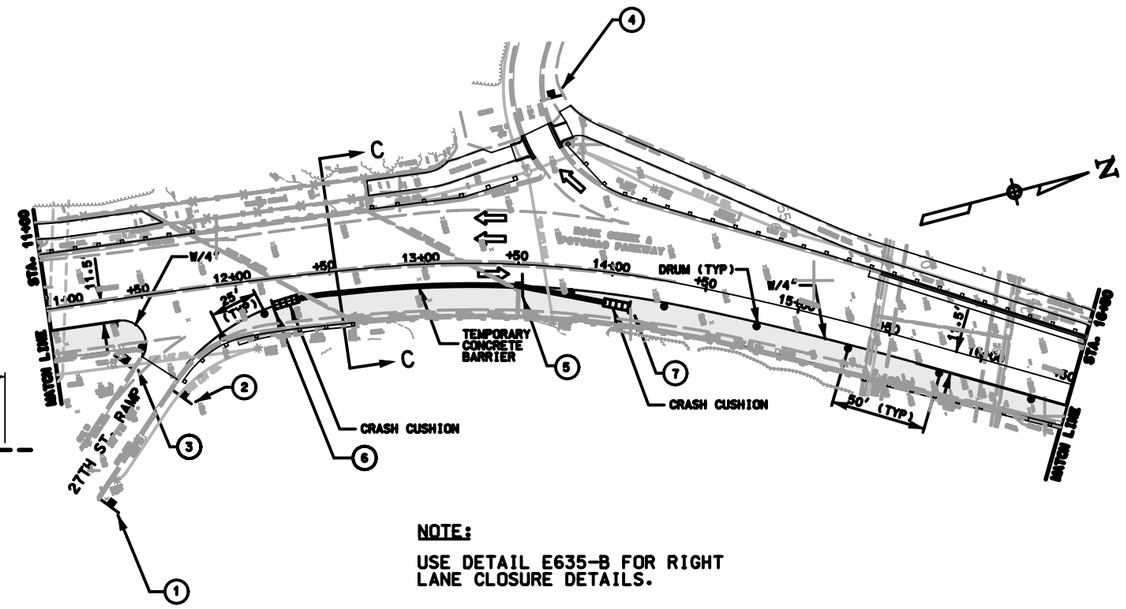

NOTE:

USE DETAIL E635-B FOR RIGHT LANE CLOSURE DETAILS.

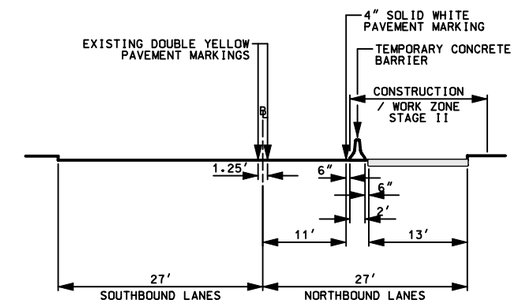

L STREET BRIDGE
SCALE 1" = 10'

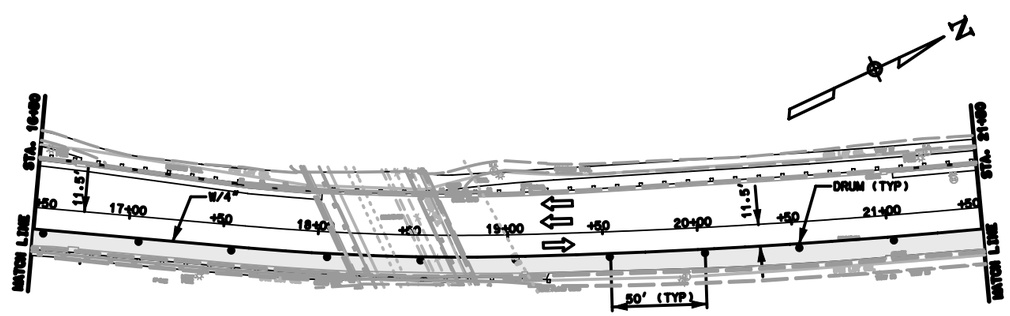

	CONSTRUCTION / WORK ZONE
• •	CHANNELIZING DEVICES (DRUMS)
W/4"	SOLID WHITE PAVEMENT MARKING 4" WIDTH
Y/4"	SOLID YELLOW PAVEMENT MARKING 4" WIDTH
	TRAFFIC FLOW ARROW
	SIGN MOUNTED ON WOOD POST
	NARROW CRASH CUSHION (REFER TO DCR SECTION 635.19)
	TEMPORARY CONCRETE BARRIER
	TYPE III BARRICADES
	ARROW PANEL
	VARIABLE MESSAGE SIGN

0 40 80
SCALE IN FEET

U.S. DEPARTMENT OF TRANSPORTATION
FEDERAL HIGHWAY ADMINISTRATION
EASTERN FEDERAL LANDS HIGHWAY DIVISION
STERLING, VIRGINIA

ROCK CREEK AND POTOMAC PARKWAY

CONSTRUCTION TRAFFIC CONTROL
STAGE II

...\tp09roc2.dgn 8/14/2006 2:15:00 PM

NPS	REG	STATE	PROJECT	SHEET NO.	TOTAL SHEETS
821 41920	NC	DC	PRA-ROCR 3A5.204(1)	64	139

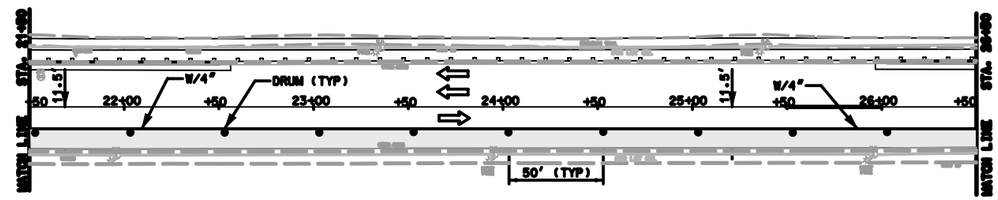

NOTE:

USE DETAIL E635-B FOR RIGHT LANE CLOSURE DETAILS.

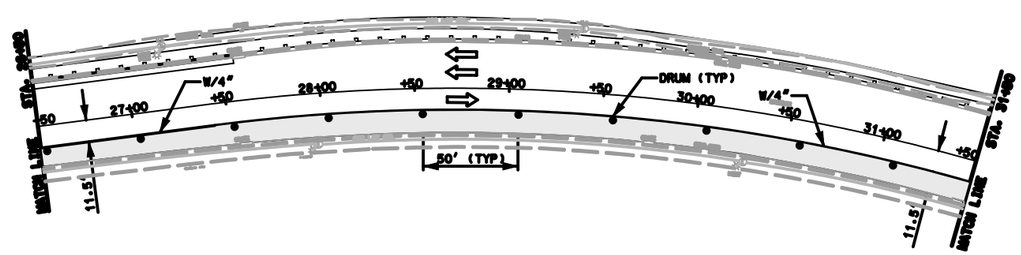

- CONSTRUCTION / WORK ZONE
- CHANNELIZING DEVICES (DRUMS)
- W/4" — SOLID WHITE PAVEMENT MARKING 4" WIDTH
- Y/4" — SOLID YELLOW PAVEMENT MARKING 4" WIDTH
- TRAFFIC FLOW ARROW
- SIGN MOUNTED ON WOOD POST
- NARROW CRASH CUSHION (REFER TO SCR SECTION 635.19)
- TEMPORARY CONCRETE BARRIER
- TYPE III BARRICADES
- ARROW PANEL
- VARIABLE MESSAGE SIGN

0 40 80
SCALE IN FEET

U.S. DEPARTMENT OF TRANSPORTATION
FEDERAL HIGHWAY ADMINISTRATION
EASTERN FEDERAL LANDS HIGHWAY DIVISION
STERLING, VIRGINIA

ROCK CREEK AND POTOMAC PARKWAY

CONSTRUCTION TRAFFIC CONTROL
STAGE II

NPS	REG	STATE	PROJECT	SHEET NO.	TOTAL SHEETS
821 / 41920	NC	DC	PRA-ROCR 3A5.204(1)	65	139

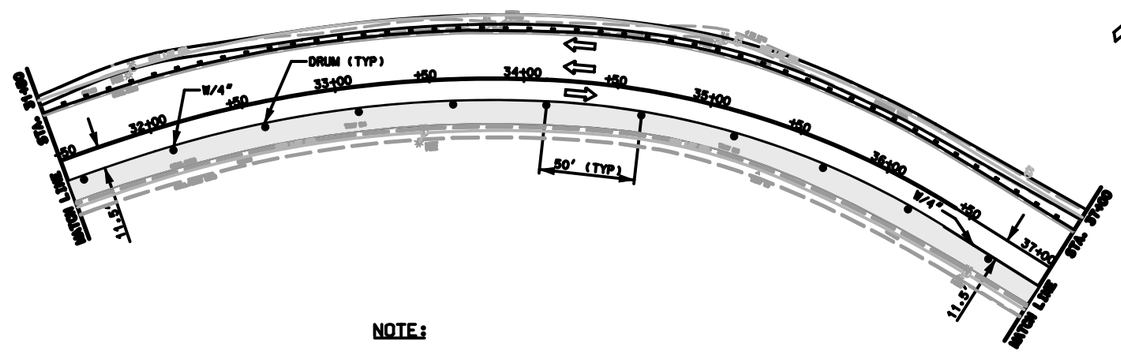

NOTE:

USE DETAIL E635-B FOR RIGHT LANE CLOSURE DETAILS.

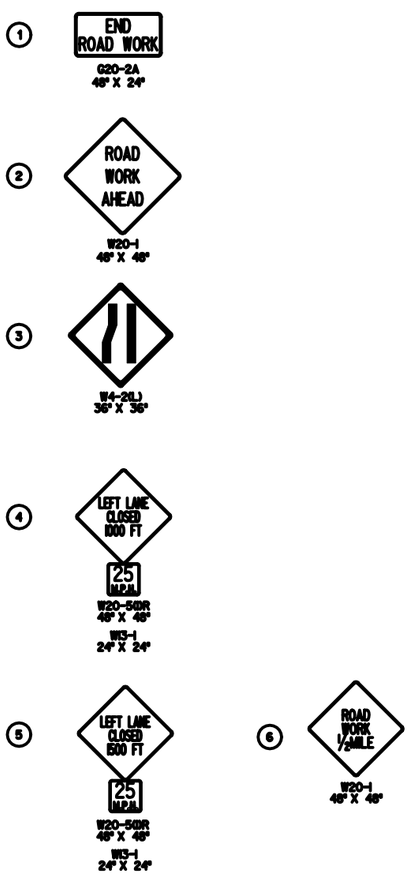

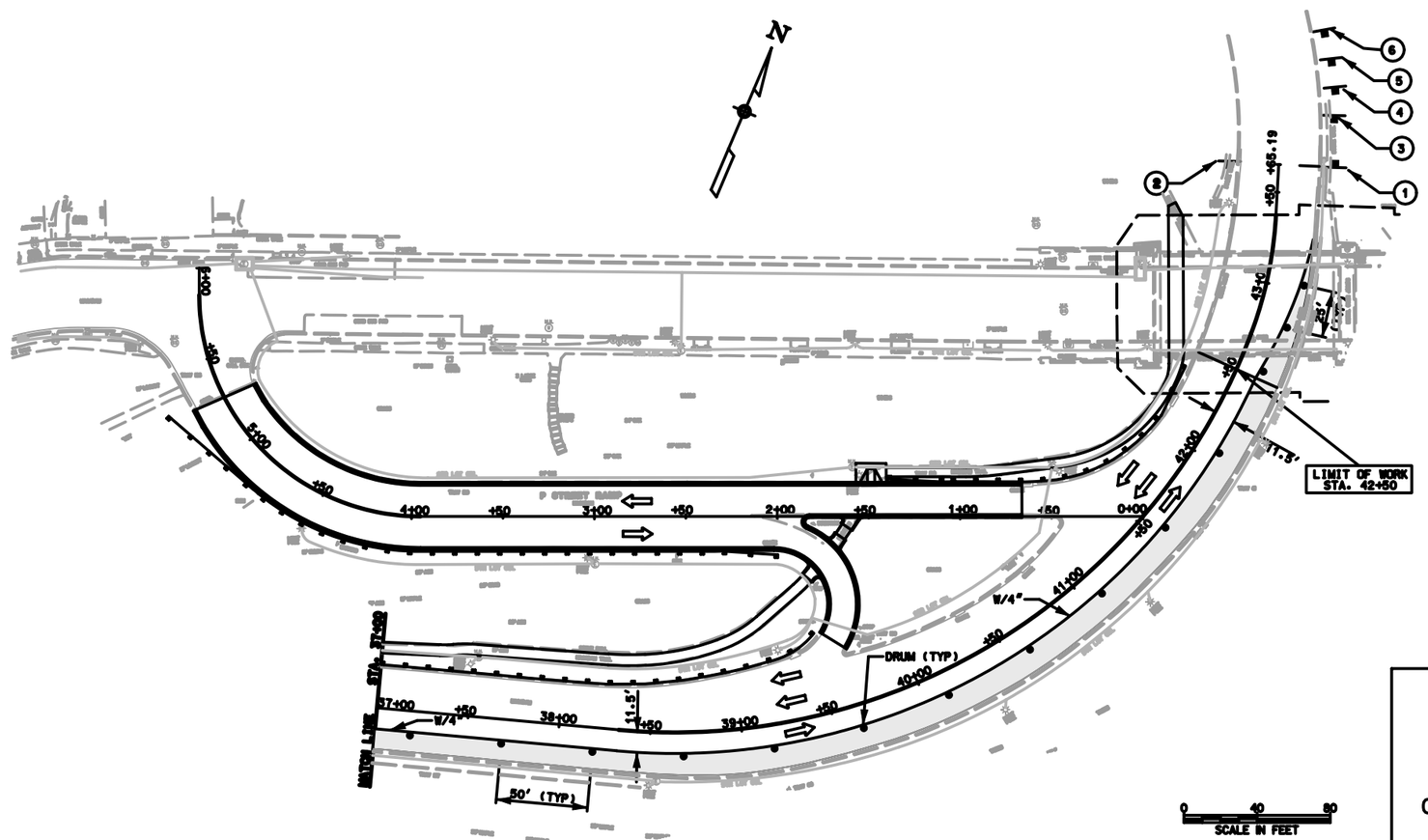

CONSTRUCTION / WORK ZONE

CHANNELIZING DEVICES (DRUMS)

W/4" SOLID WHITE PAVEMENT MARKING 4" WIDTH

Y/4" SOLID YELLOW PAVEMENT MARKING 4" WIDTH

TRAFFIC FLOW ARROW

SIGN MOUNTED ON WOOD POST

NARROW CRASH CUSHION (REFER TO SCR SECTION 635.19)

TEMPORARY CONCRETE BARRIER

TYPE III BARRICADES

ARROW PANEL

VARIABLE MESSAGE SIGN

U.S. DEPARTMENT OF TRANSPORTATION
FEDERAL HIGHWAY ADMINISTRATION
EASTERN FEDERAL LANDS HIGHWAY DIVISION
STERLING, VIRGINIA

ROCK CREEK AND POTOMAC PARKWAY

CONSTRUCTION TRAFFIC CONTROL
STAGE II

...\tp11roc2.dgn 8/14/2006 2:16:25 PM

NPS	REG	STATE	PROJECT	SHEET NO.	TOTAL SHEETS
821 41920	NC	DC	PRA-ROCR 3A5.204(1)	66	139

NOTES:

1. CONTRACTOR SHALL KEEP THE SOUTHBOUND LEFT TURN LANE ON ROCK CREEK PARKWAY OPEN FOR VEHICLES TURNING LEFT ON VIRGINIA AVENUE AS LONG AS POSSIBLE DURING THIS STAGE OF CONSTRUCTION.
2. USE DETAIL E635-A FOR LEFT LANE CLOSURE DETAILS.

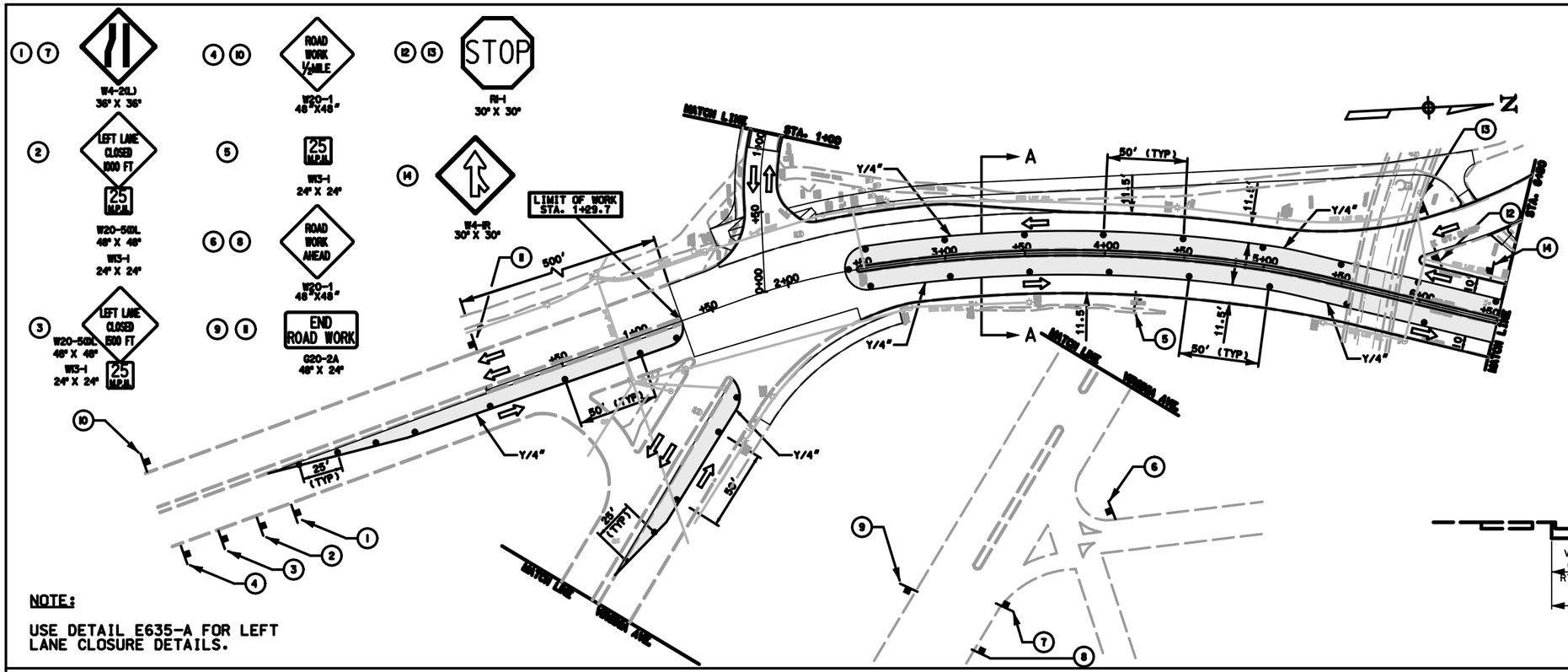

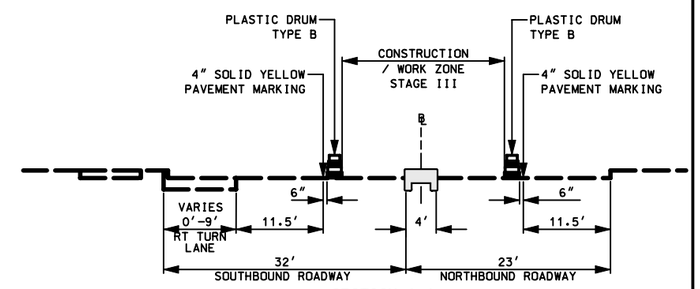

SECTION A-A
SCALE 1" = 10'

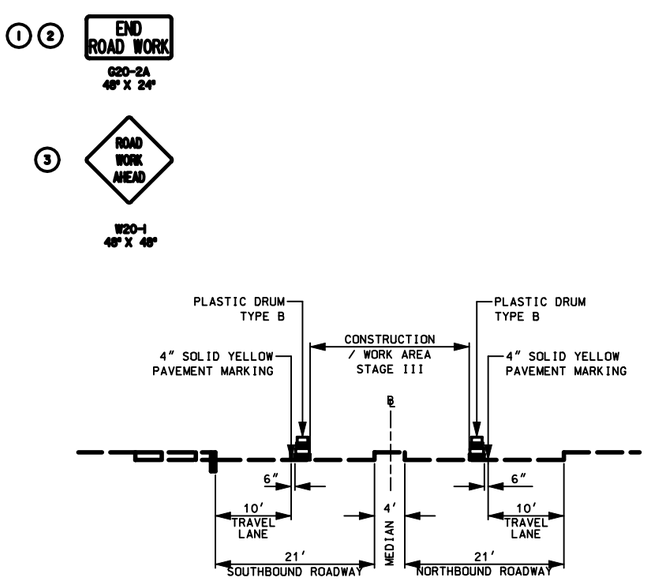

SECTION B-B
SCALE 1" = 10'

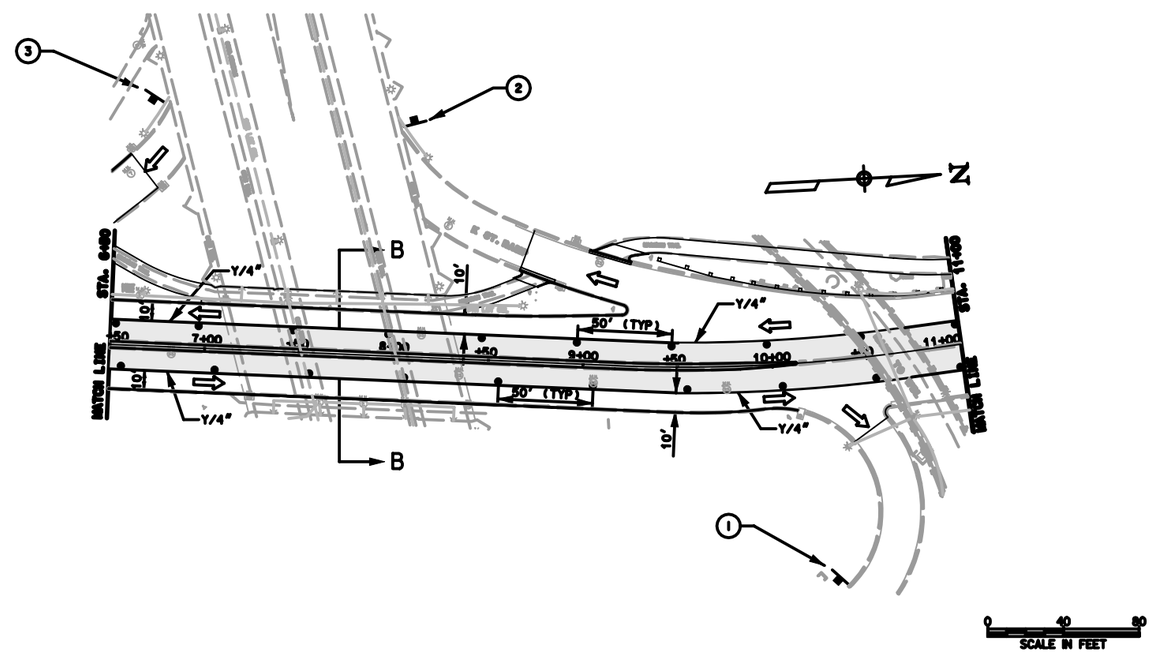

- CONSTRUCTION / WORK ZONE
- CHANNELIZING DEVICES (DRUMS)
- W/4" SOLID WHITE PAVEMENT MARKING 4" WIDTH
- Y/4" SOLID YELLOW PAVEMENT MARKING 4" WIDTH
- TRAFFIC FLOW ARROW
- SIGN MOUNTED ON WOOD POST
- MARROW CRASH CUSHION (REFER TO DGN SECTION 635.19)
- TEMPORARY CONCRETE BARRIER
- TYPE III BARRICADES
- ARROW PANEL
- VARIABLE MESSAGE SIGN

U.S. DEPARTMENT OF TRANSPORTATION
FEDERAL HIGHWAY ADMINISTRATION
EASTERN FEDERAL LANDS HIGHWAY DIVISION
STERLING, VIRGINIA

ROCK CREEK AND POTOMAC PARKWAY

CONSTRUCTION TRAFFIC CONTROL STAGE III

...\tp12roc3.dgn 8/14/2006 2:17:02 PM

NPS	REG	STATE	PROJECT	SHEET NO.	TOTAL SHEETS
821 41920	NC	DC	PRA-ROCR 3A5.204(1)	67	139

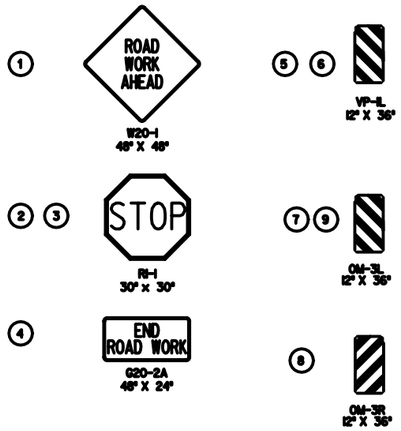

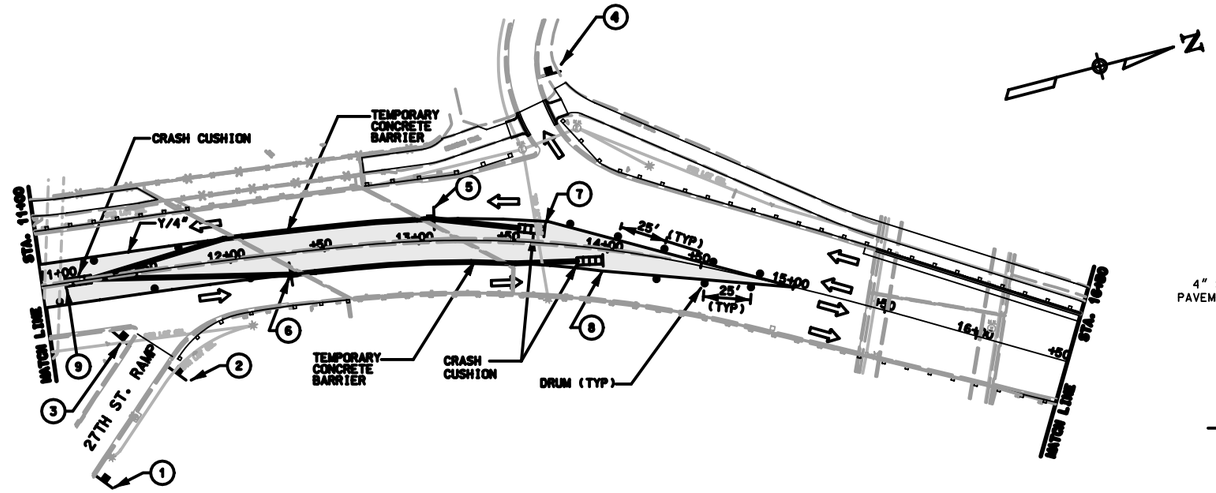

NOTE:

USE DETAIL E635-A FOR LEFT LANE CLOSURE DETAILS.

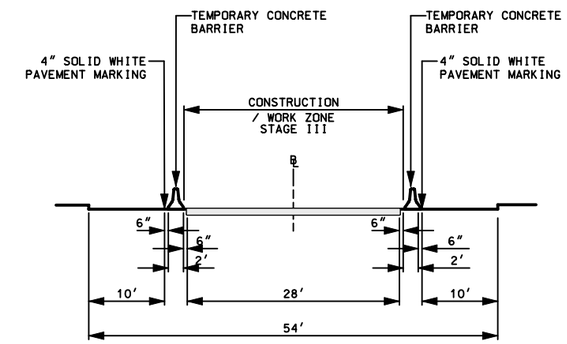

L STREET BRIDGE

SCALE 1" = 10'

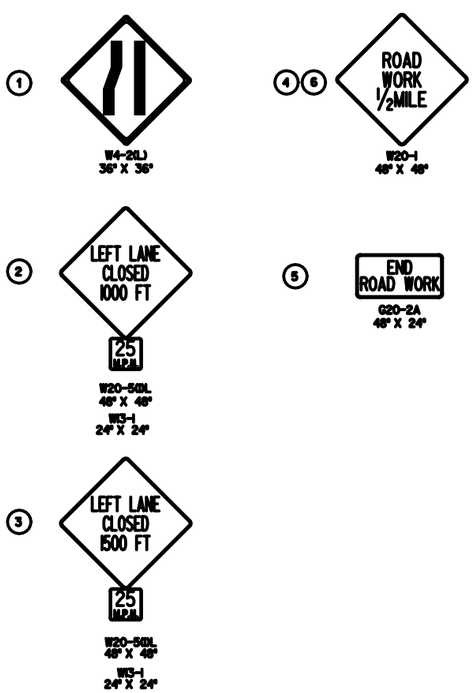

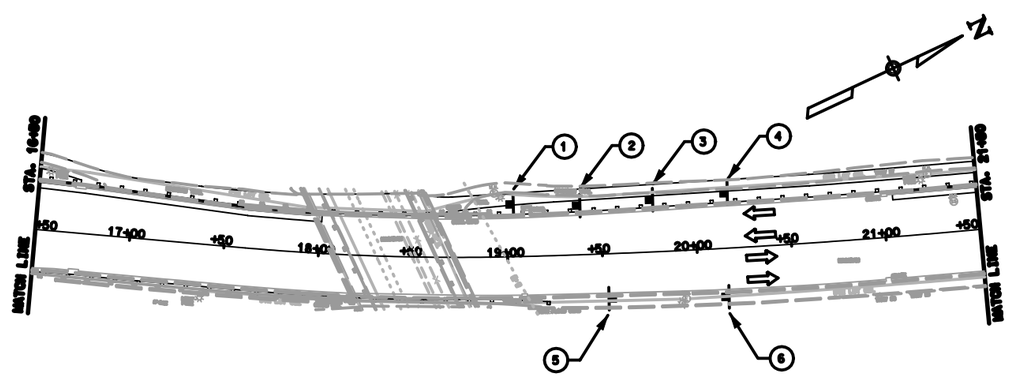

CONSTRUCTION / WORK ZONE

CHANNELIZING DEVICES (DRUMS)

W/4" SOLID WHITE PAVEMENT MARKING 4" WIDTH

Y/4" SOLID YELLOW PAVEMENT MARKING 4" WIDTH

TRAFFIC FLOW ARROW

SIGN MOUNTED ON WOOD POST

MASSIVE CRASH CUSHION (REFER TO SCR SECTION 635.19)

TEMPORARY CONCRETE BARRIER

TYPE III BARRICADES

ARROW PANEL

VARIABLE MESSAGE SIGN

0 40 80
SCALE IN FEET

U.S. DEPARTMENT OF TRANSPORTATION
FEDERAL HIGHWAY ADMINISTRATION
EASTERN FEDERAL LANDS HIGHWAY DIVISION
STERLING, VIRGINIA

ROCK CREEK AND POTOMAC PARKWAY

CONSTRUCTION TRAFFIC CONTROL STAGE III

NPS	REG	STATE	PROJECT	SHEET NO.	TOTAL SHEETS
821 41920	NC	DC	PRA-ROCR 3A5.204(1)	68	140

HIKER/BIKER DETOUR ROUTE

DURING THE PROJECT CONSTRUCTION, PARTS OF THE EXISTING HIKER/BIKER TRAIL WILL BE CLOSED. THE CLOSED TRAIL EXTENDS FROM SOUTH OF VIRGINIA AVENUE TO THE END OF THE THOMPSON'S PARKING LOT AND FROM THE PENNSYLVANIA AVENUE RAMP TO THE 'P' STREET RAMP.

AS A TEMPORARY DETOUR, AN ALTERNATIVE PATH CONSISTING OF EXISTING TRAILS, EXISTING SIDEWALKS, EXISTING ROADWAYS, AND TEMPORARY CONSTRUCTED TRAILS WILL BE PROVIDED. REFER TO THE FOLLOWING TWO DRAWINGS FOR THE PROPOSED DETOURED ROUTE.

THE PROPOSED DETOUR STARTS SOUTH OF VIRGINIA AVENUE USING THE EXISTING TRAIL SITUATED JUST TO THE SOUTH OF THE ACCESS ROAD . A TEMPORARY TRAIL IS CONSTRUCTED TO GO AROUND THE THOMPSON'S PARKING LOT. THEN, THE DETOURED PATH MERGES WITH THE EXISTING TRAIL ADJACENT TO THE ROCK CREEK PARKWAY UNTIL IT REACHES THE RAMP TO PENNSYLVANIA AVENUE. WHEN CONSTRUCTION WORK TAKES PLACE ON THIS SEGMENT OF THE TRAIL, THE CONTRACTOR IS REQUIRED TO TEMPORARILY CLOSE DOWN THE PATH. IN ORDER TO MINIMIZE ANY INCONVENIENCE TO THE HIKERS/BIKERS, THE CONTRACTOR MUST FINISH THE CONSTRUCTION WORK ON THIS PORTION OF THE TRAIL AS QUICKLY AS POSSIBLE.

THE PROPOSED DETOURED TRAIL THEN RUNS ADJACENT TO THE PENNSYLVANIA AVENUE RAMP AND WEST ALONG THE SOUTH SIDEWALK OF PENNSYLVANIA AVENUE TO 28TH STREET. THE DETOUR NOW UTILIZES D.C. CITY STREETS AS FOLLOWS: NORTH ON 28TH STREET TO EAST (RIGHT) ON OLIVE STREET, TO NORTH (LEFT) ON 27TH STREET, TO EAST (RIGHT) ON 'P' STREET UNTIL IT REACHES THE 'P' STREET RAMP.

AS THE CONSTRUCTION WORK IS DIVIDED IN TWO PHASES (PHASE III AND IV) ON 'P' STREET RAMP, THERE WILL BE A NEED FOR TWO SEPARATE TRAIL CONFIGURATIONS (REFER TO SHEET 70-B FOR THIS AREA).
DURING THE PHASE I, STAGE III CONSTRUCTION, THE DETOURED PATH WILL CONTINUE ONTO A TEMPORARY TRAIL CONSTRUCTED ALONG THE SOUTH SIDE OF THE 'P' STREET RAMP LINKING THE DETOURED PATH TO THE EXISTING TRAIL AT THE NORTH SIDE OF THE 'P' STREET RAMP. THIS TEMPORARY FIVE FEET TRAIL SHALL BE ENCLOSED BY SNOW FENCES ON BOTH SIDES, AND WILL SERVE THE BIKERS/HIKERS IN BOTH DIRECTIONS.
DURING THE PHASE I, STAGE IV CONSTRUCTION, THE NORTHBOUND BIKER/HIKER TRAFFIC WILL USE THE SAME PATH ESTABLISHED DURING PHASE 1, STAGE III. FOR THE SOUTHBOUND TRAFFIC, A TEMPORARY FOUR FEET TRAIL ABUTTING THE CURBS IS SET UP ON THE NORTH SIDE OF THE ROADWAY AREA . THIS TRAIL WILL CONTINUE UP THE HILL ON 'P' STREET RAMP UNTIL IT GETS LINKED TO THE DETOURED PATH ON 'P' STREET. THIS TRAIL SHALL BE PROTECTED BY TEMPORARY CONCRETE BARRIERS. LASTLY, THE CONTRACTOR'S ATTENTION MUST BE DIRECTED TO THE SOUTH SIDE OF THE 'P' STREET RAMP , IN THE VICINITY OF STA. 1+75±. WHEN CONSTRUCTION WORK TAKES PLACE ON THIS SEGMENT OF THE ROAD, THE CONTRACTOR IS REQUIRED TO TEMPORARILY CLOSE DOWN THE DETOURED PATH FOR THE SOUTHBOUND BIKER/HIKER TRAFFIC . IN ORDER TO MINIMIZE ANY INCONVENIENCE TO THE HIKERS/BIKERS, THE CONTRACTOR MUST FINISH THE CONSTRUCTION WORK ON THIS PORTION OF THE ROAD AS QUICKLY AS POSSIBLE.

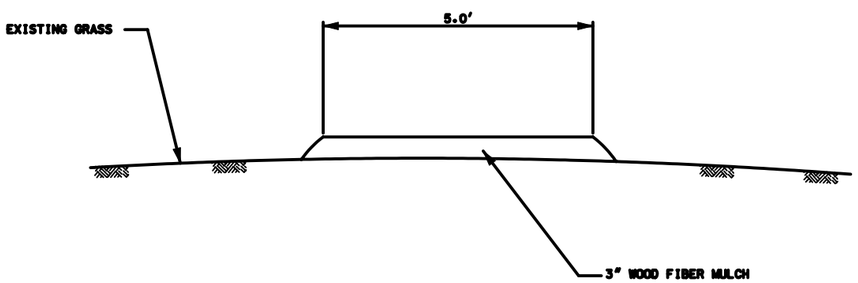

TYPICAL SECTION
TEMPORARY HIKER/ BIKER TRAIL
NOT TO SCALE

NOTE: UPON COMPLETION OF THE PROJECT, THE TEMPORARY TRAIL WILL BE REMOVED, THE DEAD GRASS WILL BE STRIPPED OFF, AND THE AREA WILL BE RESTORED USING TURF ESTABLISHMENT. PAYMENT FOR THE INSTALLATION AND REMOVAL OF THE MULCH, STRIPPING OF THE DEAD GRASS, AND TURF ESTABLISHMENT WILL BE PAID FOR UNDER ITEM 62505 A - MULCHING, DRY METHOD (TEMPORARY HIKER/BIKER TRAIL).

GENERAL NOTES

1. THE CONTRACTOR WILL BE REQUIRED TO HAVE VMS SIGNING IN PLACE A MINIMUM OF TWO WEEKS PRIOR TO ANY CHANGES IN TRAFFIC CONTROL OF THE HIKER/BIKER TRAIL.
2. ALL SIGN PLACEMENTS ARE SUBJECT TO APPROVAL BY THE CONTRACTING OFFICER (CO).
3. ALL TRAFFIC CONTROL SIGNS ARE TO CONFORM TO THE LATEST EDITION OF THE M.U.T.C.D.
4. ALL TRAFFIC CONTROL DEVICES ARE REQUIRED TO BE MAINTAINED ACCORDING TO THE SPECIFICATIONS.

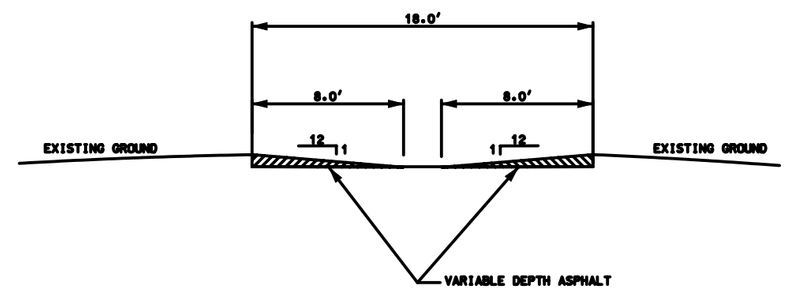

TYPICAL SECTION
TEMPORARY ASPHALT RAMPS ON 'P' STREET RAMP
NOT TO SCALE

NOTE: UPON COMPLETION OF THE PHASE I CONSTRUCTION OF THE 'P' STREET RAMP, THESE TEMPORARY ASPHALT RAMPS WILL BE REMOVED. PAYMENT FOR THE INSTALLATION AND REMOVAL OF THE TEMPORARY ASPHALT RAMPS WILL BE PAID FOR UNDER ITEM 63523 - MAINTENANCE OF TRAFFIC, PAVEMENT PATCH.

U.S. DEPARTMENT OF TRANSPORTATION
FEDERAL HIGHWAY ADMINISTRATION
EASTERN FEDERAL LANDS HIGHWAY DIVISION
STERLING, VIRGINIA

ROCK CREEK AND POTOMAC PARKWAY

HIKER / BIKER DETOUR
NOTES AND TYPICAL SECTIONS

NPS	REG	STATE	PROJECT	SHEET NO.	TOTAL SHEETS
821 41920	NC	DC	PRA-ROCR 3A5.204(1)	69	139

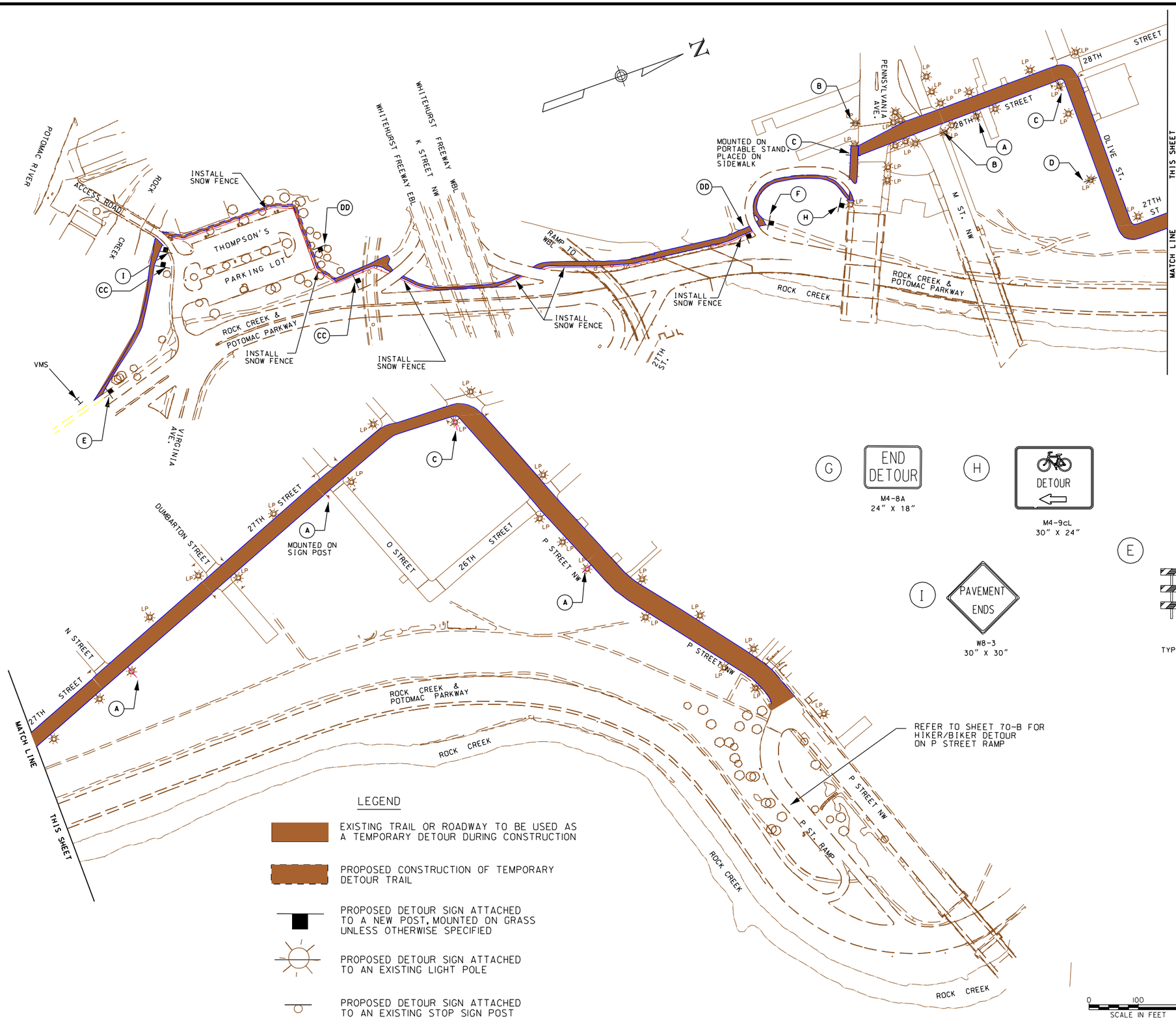

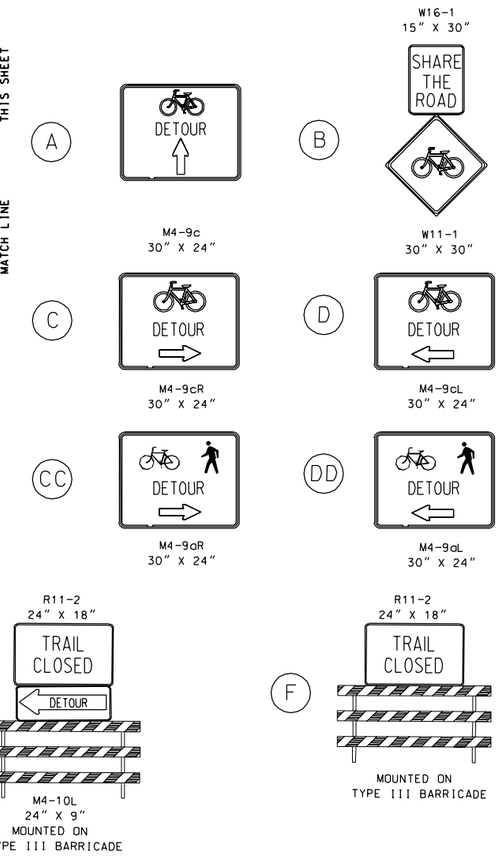

NOTE:
SIGNS SHALL BE MOUNTED ON EXISTING LIGHT POLES WHEREVER POSSIBLE. OTHERWISE, USE EXISTING STOP SIGNS AT INTERSECTIONS TO MOUNT PROPOSED BIKE DETOUR SIGNS , OR INSTALL BRAND NEW POSTS WHERE GRASS AREA IS AVAILABLE.

LEGEND

- EXISTING TRAIL OR ROADWAY TO BE USED AS A TEMPORARY DETOUR DURING CONSTRUCTION
- PROPOSED CONSTRUCTION OF TEMPORARY DETOUR TRAIL
- PROPOSED DETOUR SIGN ATTACHED TO A NEW POST, MOUNTED ON GRASS UNLESS OTHERWISE SPECIFIED
- PROPOSED DETOUR SIGN ATTACHED TO AN EXISTING LIGHT POLE
- PROPOSED DETOUR SIGN ATTACHED TO AN EXISTING STOP SIGN POST

0 100 200
SCALE IN FEET

U.S. DEPARTMENT OF TRANSPORTATION
FEDERAL HIGHWAY ADMINISTRATION
EASTERN FEDERAL LANDS HIGHWAY DIVISION
STERLING, VIRGINIA

ROCK CREEK AND POTOMAC PARKWAY

HIKER / BIKER DETOUR
(NORTHBOUND DIRECTION)

9/7/2006 2:12:01 PM M:\Projects\rocr\3a5_204\proj_dev\Cadd\REVISED_detour02rock.dgn

NPS	REG	STATE	PROJECT	SHEET NO.	TOTAL SHEETS
821 41920	NC	DC	PRA-ROCR 3A5.204(1)	70-A	139

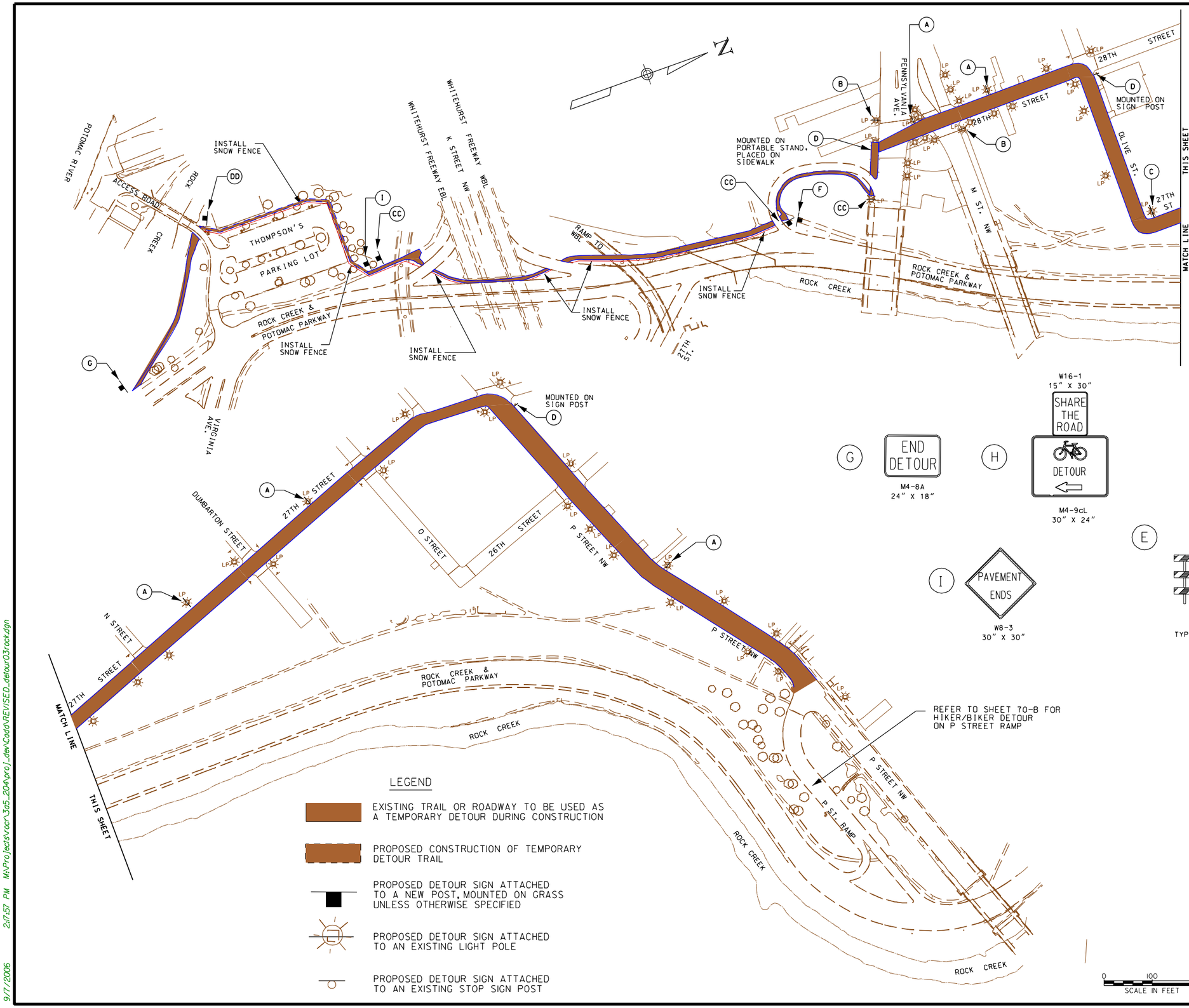

LEGEND

- EXISTING TRAIL OR ROADWAY TO BE USED AS A TEMPORARY DETOUR DURING CONSTRUCTION
- PROPOSED CONSTRUCTION OF TEMPORARY DETOUR TRAIL
- PROPOSED DETOUR SIGN ATTACHED TO A NEW POST, MOUNTED ON GRASS UNLESS OTHERWISE SPECIFIED
- PROPOSED DETOUR SIGN ATTACHED TO AN EXISTING LIGHT POLE
- PROPOSED DETOUR SIGN ATTACHED TO AN EXISTING STOP SIGN POST

A — DETOUR (M4-9c, 30" X 24")

B — SHARE THE ROAD (W16-1, 15" X 30"); W11-1, 30" X 30"

C — DETOUR (M4-9cR, 30" X 24")

D — DETOUR (M4-9cL, 30" X 24")

CC — DETOUR (M4-9aR, 30" X 24")

DD — DETOUR (M4-9aL, 30" X 24")

G — END DETOUR (M4-8A, 24" X 18")

H — SHARE THE ROAD (W16-1, 15" X 30"); DETOUR (M4-9cL, 30" X 24")

I — PAVEMENT ENDS (W8-3, 30" X 30")

E — TRAIL CLOSED, DETOUR (R11-2, 24" X 18"); M4-10L, 24" X 9", MOUNTED ON TYPE III BARRICADE

F — TRAIL CLOSED (R11-2, 24" X 18"); MOUNTED ON TYPE III BARRICADE

NOTE:
SIGNS SHALL BE MOUNTED ON EXISTING LIGHT POLES WHEREVER POSSIBLE. OTHERWISE, USE EXISTING STOP SIGNS AT INTERSECTIONS TO MOUNT PROPOSED BIKE DETOUR SIGNS , OR INSTALL BRAND NEW POSTS WHERE GRASS AREA IS AVAILABLE.

0 100 200
SCALE IN FEET

U.S. DEPARTMENT OF TRANSPORTATION
FEDERAL HIGHWAY ADMINISTRATION
EASTERN FEDERAL LANDS HIGHWAY DIVISION
STERLING, VIRGINIA

ROCK CREEK AND POTOMAC PARKWAY

HIKER / BIKER DETOUR (SOUTHBOUND DIRECTION)

9/7/2006 2:17:57 PM M:\Projects\rocr\3a5_204\proj_dev\Cadd\REVISED_detour03rock.dgn

NPS	REG	STATE	PROJECT	SHEET NO.	TOTAL SHEETS
821 / 41920	NC	DC	PRA-ROCR 3A5,204(1)	70-B	139

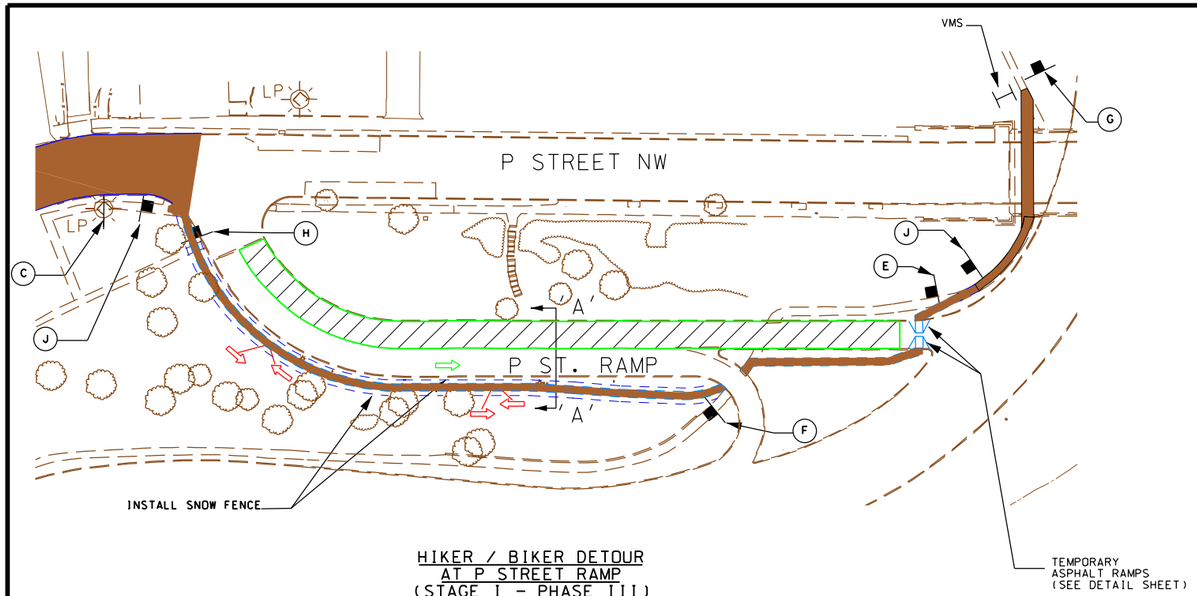

HIKER / BIKER DETOUR
AT P STREET RAMP
(STAGE I - PHASE III)

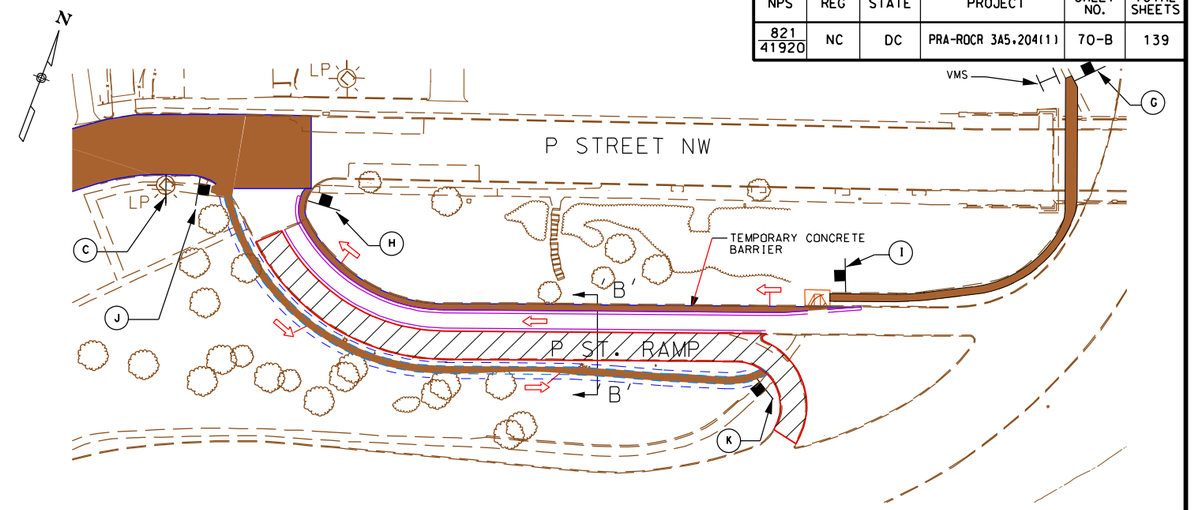

HIKER / BIKER DETOUR
AT P STREET RAMP
(STAGE I - PHASE IV)

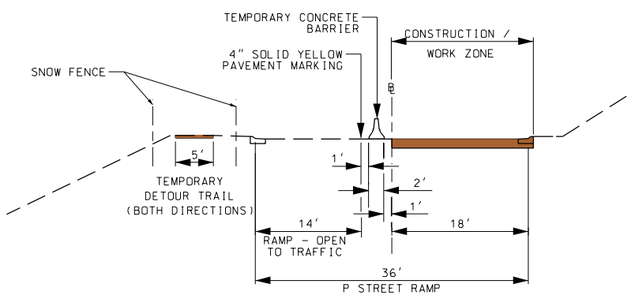

SECTION A-A
SCALE 1" = 10'

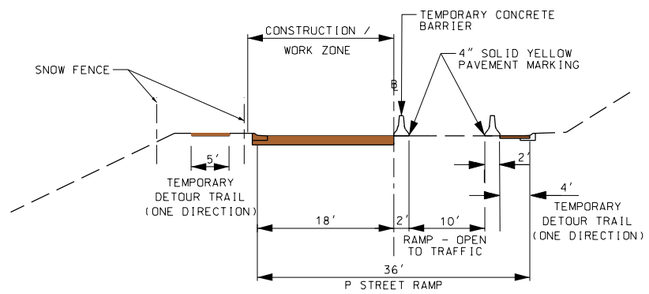

SECTION B-B
SCALE 1" = 10'

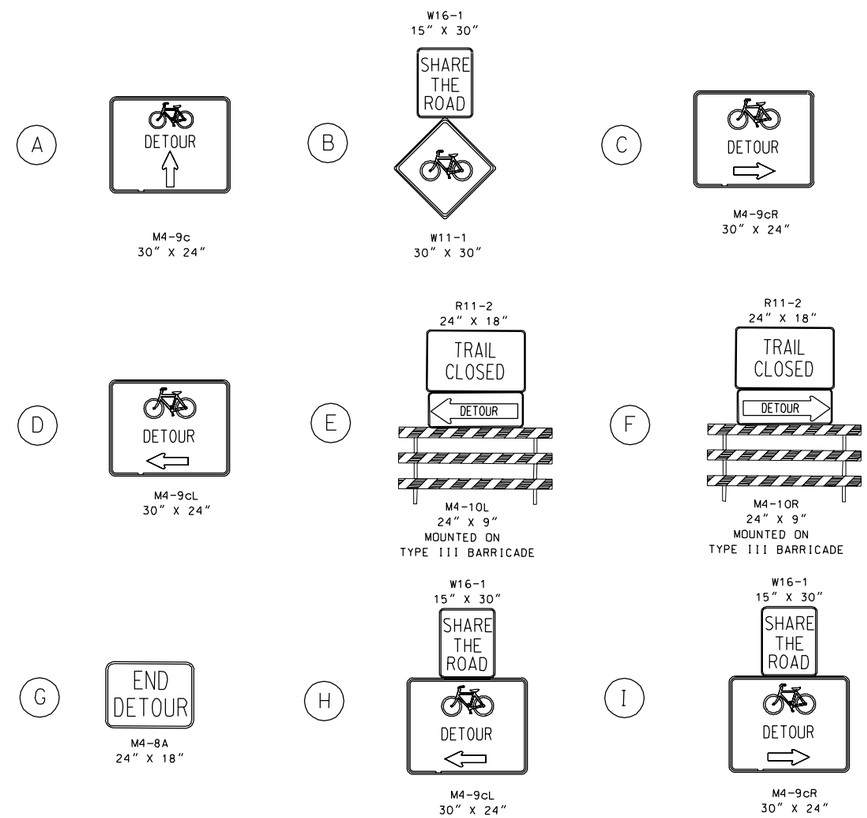

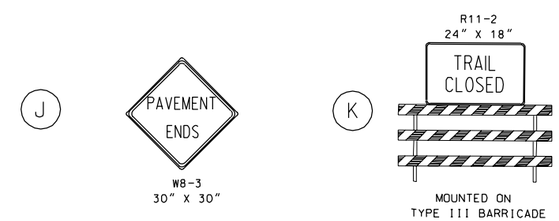

LEGEND

- EXISTING TRAIL OR ROADWAY TO BE USED AS A TEMPORARY DETOUR DURING CONSTRUCTION
- PROPOSED CONSTRUCTION OF TEMPORARY DETOUR TRAIL
- WORK AREA DURING THIS PHASE OF P STREET RECONSTRUCTION
- PROPOSED DETOUR SIGN ATTACHED TO A NEW POST, MOUNTED ON GRASS UNLESS OTHERWISE SPECIFIED
- PROPOSED DETOUR SIGN ATTACHED TO AN EXISTING LIGHT POLE
- PROPOSED DETOUR SIGN ATTACHED TO AN EXISTING STOP SIGN POST

0 50 100
SCALE IN FEET

U.S. DEPARTMENT OF TRANSPORTATION
FEDERAL HIGHWAY ADMINISTRATION
EASTERN FEDERAL LANDS HIGHWAY DIVISION
STERLING, VIRGINIA

ROCK CREEK AND POTOMAC PARKWAY

HIKER / BIKER DETOUR
(P STREET RAMP)

9/7/2006 2:20:07 PM M:\Projects\rocr\3a5_204\proj_dev\Cadd\REVISED_detour04rock.dgn

NPS	REG	STATE	PROJECT	SHEET NO.	TOTAL SHEETS
821 41920	NC	DC	PRA-ROCR 3A5.204(1)	71	139

A. GENERAL GUIDELINES

THE EROSION CONTROL PLAN (ECP) IS MEANT AS A GUIDELINE FOR PREVENTING EROSION AND CONTROLLING SEDIMENT. THE WORK OUTLINED IN THIS NARRATIVE CONSISTS OF APPLING MEASURES THROUGHOUT THE LIFE OF THE PROJECT TO CONTROL EROSION AND MINIMIZE THE SEDIMENTATION OF RIVERS, STREAMS AND/ OR IMPOUNDMENTS SUCH AS LAKES AND RESERVOIRS. THE MEASURES CONSIST OF STABILIZATION AND STRUCTURAL PRACTICES, STORMWATER CONTROLS AND OTHER MISCELLANEOUS POLLUTION PREVENTION CONTROLS. SOIL EROSION CONTROL AND TURF ESTABLISHMENT MEASURES LISTED AND REFERENCED IN THIS NARRATIVE ARE ALSO DEFINED AND OUTLINED IN THE STANDARD SPECIFICATIONS FOR CONSTRUCTION OF ROADS AND BRIDGES ON FEDERAL HIGHWAY PROJECTS, FP-96 AND THE SPECIAL CONTRACT REQUIREMENTS.

COORDINATE THE INSTALLATION, USE AND REMOVAL OF EROSION AND SEDIMENT CONTROL MEASURES WITH ROADWAY CONSTRUCTION ACTIVITIES TO ASSURE ECONOMICAL, EFFECTIVE AND CONTINUOUS EROSION AND SEDIMENT CONTROL. EMPLOY TEMPORARY STABILIZATION PRACTICES IN INCREMENTAL STAGES AS CONSTRUCTION PROCEEDS.

NOTIFY THE CONTRACTING OFFICER (CO) AND THE DEPARTMENT OF REGULATORY AFFAIRS AT 202-645-6601 SEVEN (7) DAYS BEFORE COMMENCING ANY LAND DISTURBING ACTIVITY.

THE FOLLOWING ARE REQUIREMENTS FOR EROSION AND SEDIMENT CONTROL THROUGHOUT THE DURATION OF THE PROJECT:
1. INSTALL ALL SEDIMENT AND EROSION CONTROL DEVICES BEFORE THE START OF ANY EXCAVATION AND/OR CONSTRUCTION AS PER THE PLANS AND SPECIFICATIONS UNLESS OTHERWISE DIRECTED BY THE CO. DO NOT MODIFY THE TYPE, SIZE OR LOCATION OF ANY CONTROL PRACTICE WITHOUT APPROVAL FROM THE CO.

2. MAINTAIN ALL SEDIMENT AND EROSION CONTROL DEVICES DURING CONSTRUCTION AS PER THE PLANS AND SPECIFICATIONS.

3. INSPECT AND MAINTAIN ALL SEDIMENT CONTROL DEVICES TO INSURE INTENDED PURPOSE IS ACCOMPLISHED. INSPECT ALL SEDIMENT CONTROL DEVICES DAILY AND IMMEDIATELY AFTER ANY RAINFALL EVENT. REPAIR MEASURES DAILY ONCE DAMAGE TO THE MEASURES IS DISCOVERED. THE CO WILL MAINTAIN THE AUTHORITY TO REQUIRE ADDITIONAL SEDIMENT CONTROL MEASURES AS NECESSARY TO PREVENT THE INTRUSION OF SEDIMENT INTO THE STORM DRAIN SYSTEM OR PUBLIC SPACE.

4. PROTECT ALL POINTS OF CONSTRUCTION INGRESS TO PREVENT TRACKING MUD ONTO PUBLIC WAYS. DO NOT ALLOW CONSTRUCTION VEHICLES TO TRACK SEDIMENT OFF SITE OF PROJECT LIMITS. A VEHICLE WASH AREA MAY BE REQUIRED BY THE CO IF IT IS DETERMINED THAT THE CONTRACTOR'S METHOD IS NOT ADEQUATELY PREVENTING THE TRACKING OF SEDIMENT OUTSIDE THE CONSTRUCTION LIMITS.

5. WHEN SILT IS REMOVED FROM TRAPS, ASSURE THAT IT IS PLACED AND STABILIZED ON DESIGNATED AREAS ON-SITE IN SUCH A MANNER THAT IT DOES NOT FOUL EXISTING OR PROPOSED STORM DRAINAGE SYSTEMS OR AREAS ALREADY STABILIZED.

6. PUMP TO SEDIMENT TANK AND/OR A SEDIMENT TRAP ANY WATER THAT IS PUMPED FROM EXCAVATION DURING CONSTRUCTION. CLEAN OUT ANY SEDIMENT TANK/SEDIMENT TRAP THAT HAS REACHED 67% CAPACITY. NO WATER WILL BE PUMPED TO THE STORM DRAIN SYSTEMS WITHOUT CONSENT OF THE CO.

7. ASSURE ALL WATER PUMPED FROM THE SEDIMENT TANKS OR PUMPED FROM THE SITE IS CLEAN AND SEDIMENT FREE.

8. REMOVE ALL DEBRIS FROM THE SITE.

9. WHEN NECESSARY OR DIRECTED BY THE CO, SWEEP CLEAN ALL STREETS AND SIDEWALKS DURING EXCAVATION AND CONSTRUCTION.

10. PROTECT ALL CATCH BASINS AND DRAIN AREAS DURING CONSTRUCTION. INLET PROTECTION IS REQUIRED AS NOTED IN THE ROAD CONSTRUCTION PLANS.

11. CLEAN ANY CATCH BASIN OR DRAIN THAT BECOMES CLOGGED AS A RESULT OF EXCAVATION OR CONSTRUCTION.

12. ALL STOCKPILES, REGARDLESS OF LOCATION MUST BE STABILIZED AFTER ITS ESTABLISHMENT, FOR THE DURATION OF THE PROJECT. THIS CAN BE ACCOMPLISHED USING PLASTIC, CANVAS OR SOME OTHER METHOD APPROVED BY THE CO.

13 ESTABLISH TURF OR USE ANOTHER METHOD APPROVED BY THE CO TO PREVENT EROSION AND SEDIMENT RUNOFF FROM OCCURING IN ANY DISTURBED AREAS. PERMANENT SWALES OR OTHER POINTS OF CONCENTRATED WATER FLOW SHALL BE STABILIZED WITH SOD OR TURF ESTABLISHMENT.

14. CONTROL DUST THROUGHOUT THE DURATION OF THE PROJECT ACCORDING TO SECTION 157 OF THE SPECIAL CONTRACT REQUIREMENTS.

15. IN GENERAL, PRESERVE EXISTING VEGETATION, TREES AND SHRUBS WHEN POSSIBLE, AS DIRECTED BY THE CO.

16. DO NOT ALLOW ANY CONSTRUCTION EQUIPMENT TO OPERATE OR ACCESS ON THE DOWNSLOPE SIDE OF PERIMETER CONTROL MEASURES.

SUMMARY OF DISTURBED AREAS:

THOMPSON BOAT CENTER ACCESS ROAD AND PARKING LOT: 0.98 Ac.
P STREET RAMPS: 0.60 Ac.
TOTAL: 1.58 Ac.

A. SITE DESCRIPTION

1. NATURE OF ACTIVITY

THE ROCK CREEK AND POTOMAC PARKWAY PROJECT PRA-ROCR 3A5, 204(1) CONSISTS OF THE FOLLOWING: REHABILITATION OF THE ROCK CREEK AND POTOMAC PARKWAY FROM VIRGINIA AVENUE TO P STREET INCLUDING PORTIONS OF THE HIKER/BIKER TRAIL AND RECONSTRUCTION OF THE THOMPSON BOAT CENTER ACCESS ROAD AND PARKING LOT. THE WORK INCLUDES PAVEMENT REMOVAL, DRAINAGE, BASE, PAVING, SIDEWALKS, CURBING, LIGHTING, PAVEMENT MILLING, OVERLAY AND OTHER WORK.

2. SEQUENCE OF CONSTRUCTION

THE PLANS INCLUDE A RECOMMENDED SEQUENCE OF CONSTRUCTION WITH AN ASSOCIATED TRAFFIC CONTROL PLAN. THE INSTALLATION, USE AND REMOVAL OF THE SEDIMENT AND EROSION CONTROL DEVICES SHOWN ON THESE PLANS SHALL BE COORDINATED WITH THE CONSTRUCTION ACTIVITIES IN THE INCREMENTAL STAGES AS DESCRIBED IN THE CONSTRUCTION STAGING PLAN.

PHASE I (ESTABLISH PERIMETER CONTROLS):

PRIOR TO ANY CONSTRUCTION, CONSTRUCT A STABILIZED CONSTRUCTION ENTRANCE TO THE STAGING AREA AS SHOWN IN THE ECP OR AS DIRECTED BY THE CO.

PRIOR TO ANY CLEARING AND GRUBBING, REMOVAL, EXCAVATION OR EMBANKMENT CONSTRUCT PERIMETER CONTROLS SUCH AS SILT FENCE TO ENSURE THAT DISTURBED SEDIMENT DOES NOT LEAVE THE PROJECT AREA.

PHASE II (INTERMEDIATE CONTROLS/STABILIZATION):

APPLY INTERMEDIATE CONTROLS (INLET PROTECTION) PRIOR TO DIVERTING WATER THROUGH THE INLETS. OBTAIN THE CO'S APPROVAL BEFORE INSTALLING ANY CONTROLS NOT SPECIFIED IN THE ECP. THE CO MAY DIRECT THE INSTALLATION OF CERTAIN CONTROLS IN ORDER TO FORESTALL OR MITIGATE POTENTIAL OR EXISTING EROSION PROBLEMS OR TO RESPOND TO STORM EVENTS OR DAMAGE BY CONSTRUCTION OPERATIONS.

AS SOON AS PRACTICAL, BUT NOT TO EXCEED 30 CALENDAR DAYS, APPLY PERMANENT TURF ESTABLISHMENT OVER 2" OF TOPSOIL IN AREAS WHICH WILL NOT BE PAVED OR OTHERWISE COVERED WITH ASPHALT, GRAVEL OR CONCRETE.

PHASE III (FINAL CONTROLS/STABILIZATION)

AFTER COMPLETION OF CONSTRUCTION, DO THE FOLLOWING AS DIRECTED BY THE CO.

WHERE NECESSARY, REPLACE DAMAGED SOD IN DISTURBED AREAS WHERE VEGETATION HAS NOT ESTABLISHED.

REMOVE ALL PERIMETER CONTROLS WHEN DIRECTED BY THE CO.

U.S. DEPARTMENT OF TRANSPORTATION
FEDERAL HIGHWAY ADMINISTRATION
EASTERN FEDERAL LANDS HIGHWAY DIVISION
STERLING, VIRGINIA

ROCK CREEK AND POTOMAC PARKWAY

SEDIMENT AND EROSION NARRATIVE

NPS	REG	STATE	PROJECT	SHEET NO.	TOTAL SHEETS
621 41920	NC	DC	FRA-ROCR 345.204(1)	72	130

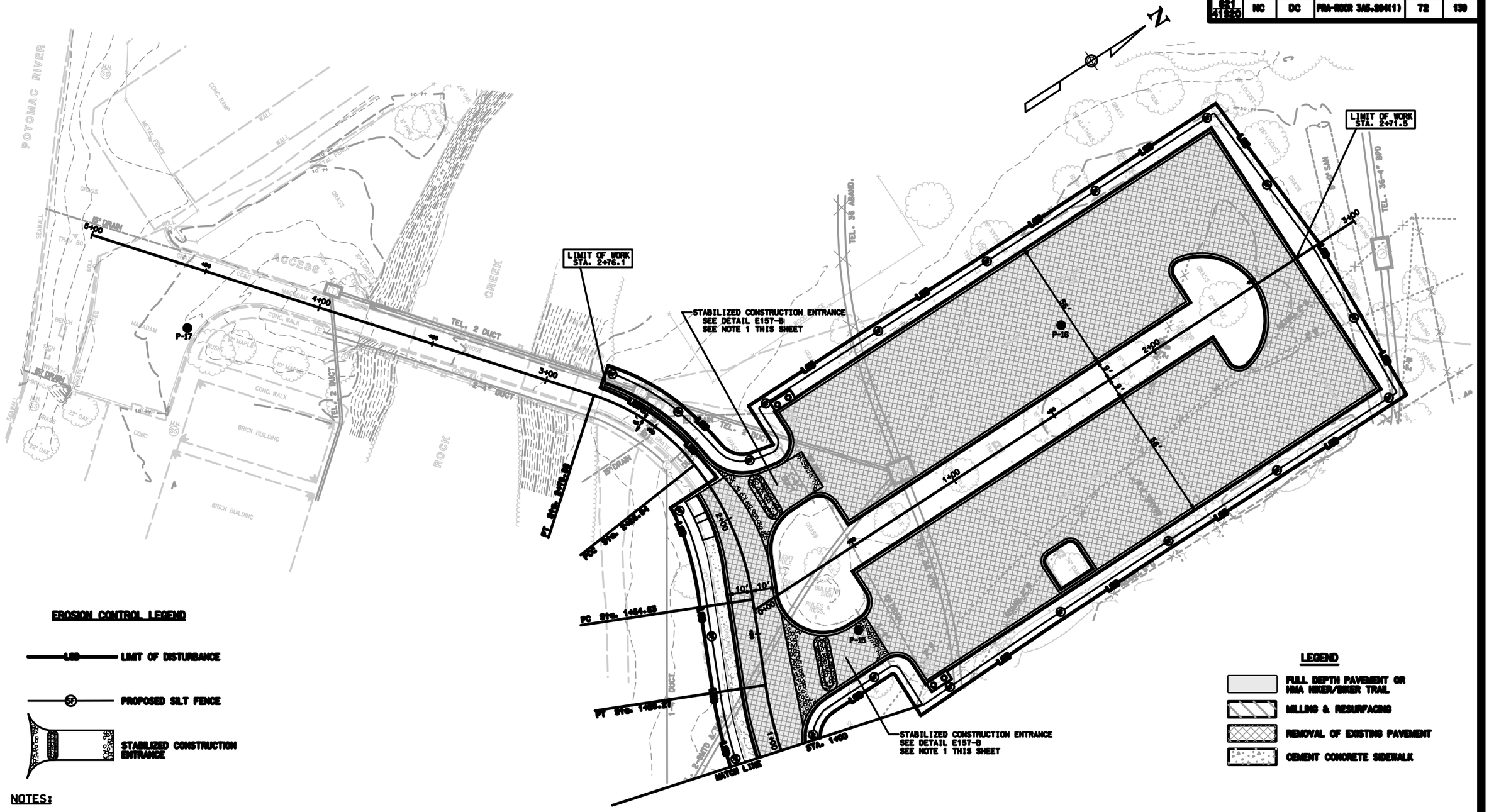

EROSION CONTROL LEGEND

LOD — LIMIT OF DISTURBANCE

SF — PROPOSED SILT FENCE

STABILIZED CONSTRUCTION ENTRANCE

LEGEND

- FULL DEPTH PAVEMENT OR HMA HIKER/BIKER TRAIL
- MILLING & RESURFACING
- REMOVAL OF EXISTING PAVEMENT
- CEMENT CONCRETE SIDEWALK

NOTES:

1. THE INSTALLATION, USE, REMOVAL AND RESETTING OF THE SEDIMENT AND EROSION CONTROL DEVICES SHOWN ON THE PLAN SHALL BE COORDINATED WITH THE CONSTRUCTION ACTIVITIES IN THE INCREMENTAL STAGES AS DESCRIBED IN THE CONSTRUCTION STAGING NOTES ON THE CONSTRUCTION TRAFFIC CONTROL - NOTES AND SEQUENCE OF WORK SHEET.
2. PLACE TEMPORARY INLET PROTECTION FOR ALL EXISTING AND PROPOSED INLETS UNLESS OTHERWISE DIRECTED BY THE CO. SEE DETAIL 157-2.
3. WHEN PLACING SILT FENCE, AVOID PLACING THE SILT FENCE AROUND TREES. PLACE SILT FENCE AS DIRECTED BY THE CO. REFER TO DETAIL E157-A FOR PLACEMENT OF SILT FENCE WITHIN DRIPLINE OF TREES. OTHERWISE REFER TO DETAIL 157-1.

0 20 40
SCALE IN FEET

U.S. DEPARTMENT OF TRANSPORTATION
FEDERAL HIGHWAY ADMINISTRATION
EASTERN FEDERAL LANDS HIGHWAY DIVISION
STERLING, VIRGINIA

ROCK CREEK AND POTOMAC PARKWAY

THOMPSON'S BOAT CENTER ACCESS ROAD AND PARKING LOT EROSION & SEDIMENT CONTROL PLAN

...\ep01rock.dgn 8/14/2006 2:59:55 PM

NPS	REG	STATE	PROJECT	SHEET NO.	TOTAL SHEETS
621 41220	NC	DC	PKA-ROCR 345.204(1)	73	139

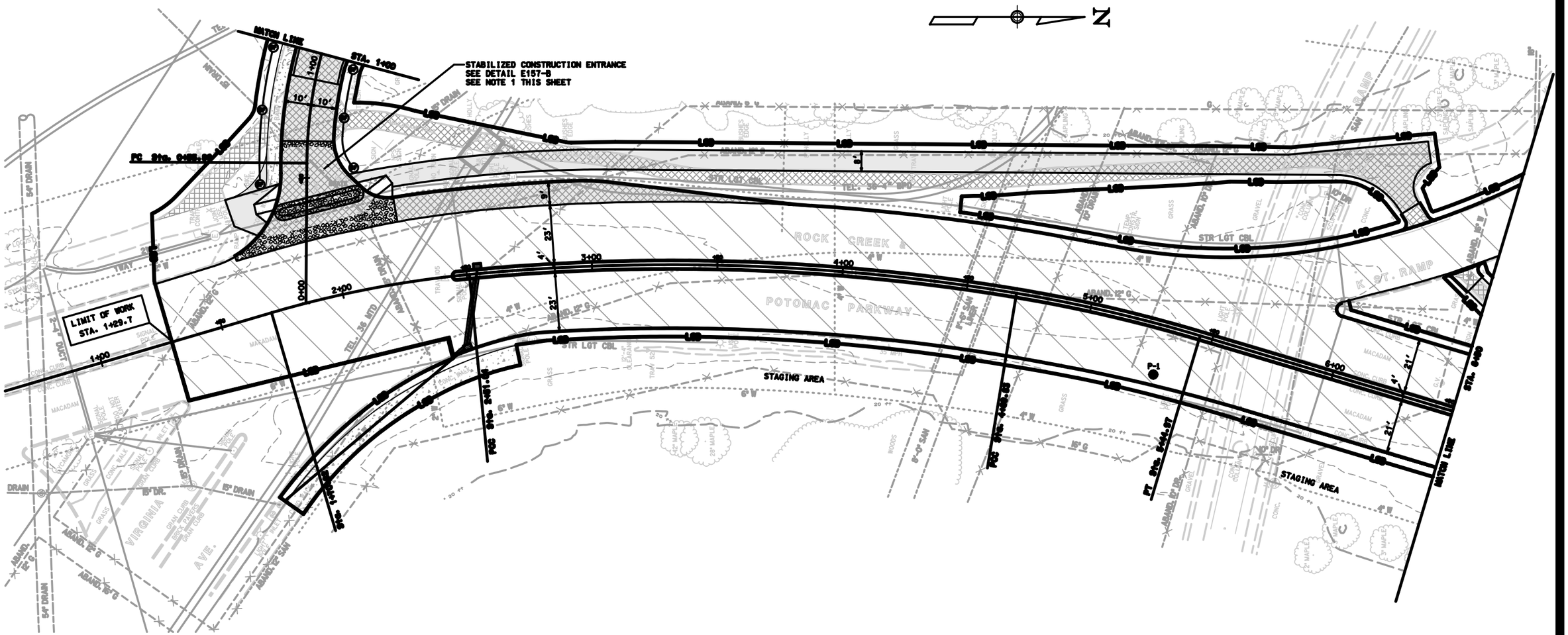

NOTES:

1. THE INSTALLATION, USE, REMOVAL AND RESETTING OF THE SEDIMENT AND EROSION CONTROL DEVICES SHOWN ON THE PLAN SHALL BE COORDINATED WITH THE CONSTRUCTION ACTIVITIES IN THE INCREMENTAL STAGES AS DESCRIBED IN THE CONSTRUCTION STAGING NOTES ON THE CONSTRUCTION TRAFFIC CONTROL - NOTES AND SEQUENCE OF WORK SHEET.
2. PLACE TEMPORARY INLET PROTECTION FOR ALL EXISTING AND PROPOSED INLETS UNLESS OTHERWISE DIRECTED BY THE CO. SEE DETAIL 157-2.
3. WHEN PLACING SILT FENCE, AVOID PLACING THE SILT FENCE AROUND TREES. PLACE SILT FENCE AS DIRECTED BY THE CO. REFER TO DETAIL E157-A FOR PLACEMENT OF SILT FENCE WITHIN DRIPLINE OF TREES. OTHERWISE REFER TO DETAIL 157-1.
4. THE AREA OF ROCK CREEK PARKWAY FROM STATION 1+29.7 TO STATION 42+50 IS MILLING AND OVERLAYING. PLACE TEMPORARY INLET PROTECTION FOR ALL EXISTING INLETS AND ALL PROPOSED INLETS UNLESS OTHERWISE DIRECTED BY THE CO. SEE DETAIL 157-2.

EROSION CONTROL LEGEND

LOD — LIMIT OF DISTURBANCE

SF — PROPOSED SILT FENCE

STABILIZED CONSTRUCTION ENTRANCE

LEGEND

- FULL DEPTH PAVEMENT OR HMA HIKER/BIKER TRAIL
- MILLING & RESURFACING
- REMOVAL OF EXISTING PAVEMENT
- CEMENT CONCRETE SIDEWALK

0 20 40
SCALE IN FEET

U.S. DEPARTMENT OF TRANSPORTATION
FEDERAL HIGHWAY ADMINISTRATION
EASTERN FEDERAL LANDS HIGHWAY DIVISION
STERLING, VIRGINIA

ROCK CREEK AND POTOMAC PARKWAY

ROCK CREEK & POTOMAC PARKWAY VIRGINIA AVE. TO STA. 6+50 EROSION & SEDIMENT CONTROL PLAN

...\ep02rock.dgn 8/14/2006 3:02:31 PM

NPS	REG	STATE	PROJECT	SHEET NO.	TOTAL SHEETS
621 41920	NC	DC	FRA-ROCR 345.204(1)	74	139

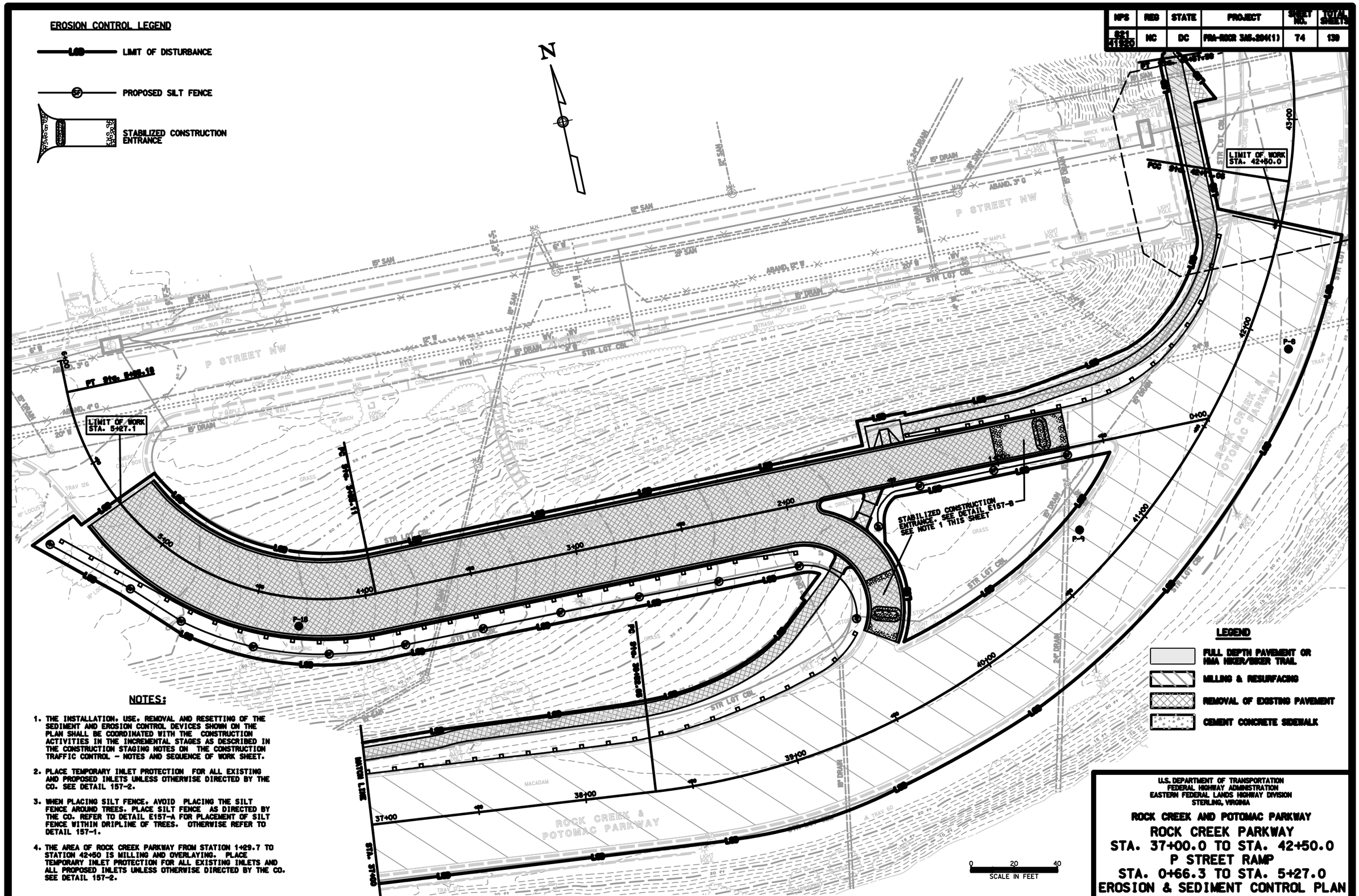

NOTES:

1. THE INSTALLATION, USE, REMOVAL AND RESETTING OF THE SEDIMENT AND EROSION CONTROL DEVICES SHOWN ON THE PLAN SHALL BE COORDINATED WITH THE CONSTRUCTION ACTIVITIES IN THE INCREMENTAL STAGES AS DESCRIBED IN THE CONSTRUCTION STAGING NOTES ON THE CONSTRUCTION TRAFFIC CONTROL - NOTES AND SEQUENCE OF WORK SHEET.
2. PLACE TEMPORARY INLET PROTECTION FOR ALL EXISTING AND PROPOSED INLETS UNLESS OTHERWISE DIRECTED BY THE CO. SEE DETAIL 157-2.
3. WHEN PLACING SILT FENCE, AVOID PLACING THE SILT FENCE AROUND TREES. PLACE SILT FENCE AS DIRECTED BY THE CO. REFER TO DETAIL E157-A FOR PLACEMENT OF SILT FENCE WITHIN DRIPLINE OF TREES. OTHERWISE REFER TO DETAIL 157-1.
4. THE AREA OF ROCK CREEK PARKWAY FROM STATION 1+29.7 TO STATION 42+50 IS MILLING AND OVERLAYING. PLACE TEMPORARY INLET PROTECTION FOR ALL EXISTING INLETS AND ALL PROPOSED INLETS UNLESS OTHERWISE DIRECTED BY THE CO. SEE DETAIL 157-2.

U.S. DEPARTMENT OF TRANSPORTATION
FEDERAL HIGHWAY ADMINISTRATION
EASTERN FEDERAL LANDS HIGHWAY DIVISION
STERLING, VIRGINIA

ROCK CREEK AND POTOMAC PARKWAY

ROCK CREEK PARKWAY
STA. 37+00.0 TO STA. 42+50.0
P STREET RAMP
STA. 0+66.3 TO STA. 5+27.0
EROSION & SEDIMENT CONTROL PLAN

...\ep09rock.dgn 8/14/2006 3:03:27 PM

NPS	REG	STATE	PROJECT	SHEET NO.	TOTAL SHEETS
821 41920	NC	DC	PRA-ROCR 3A5.204(1)	75	139

ALL STRIPING SHALL BE IN ACCORDANCE WITH THE MANUAL ON UNIFORM TRAFFIC CONTROL DEVICES (MUTCD) LATEST EDITION. EXCEPT AS MODIFIED BY THE SPECIFIC CONSTRUCTION REQUIREMENTS OF THIS CONTRACT.

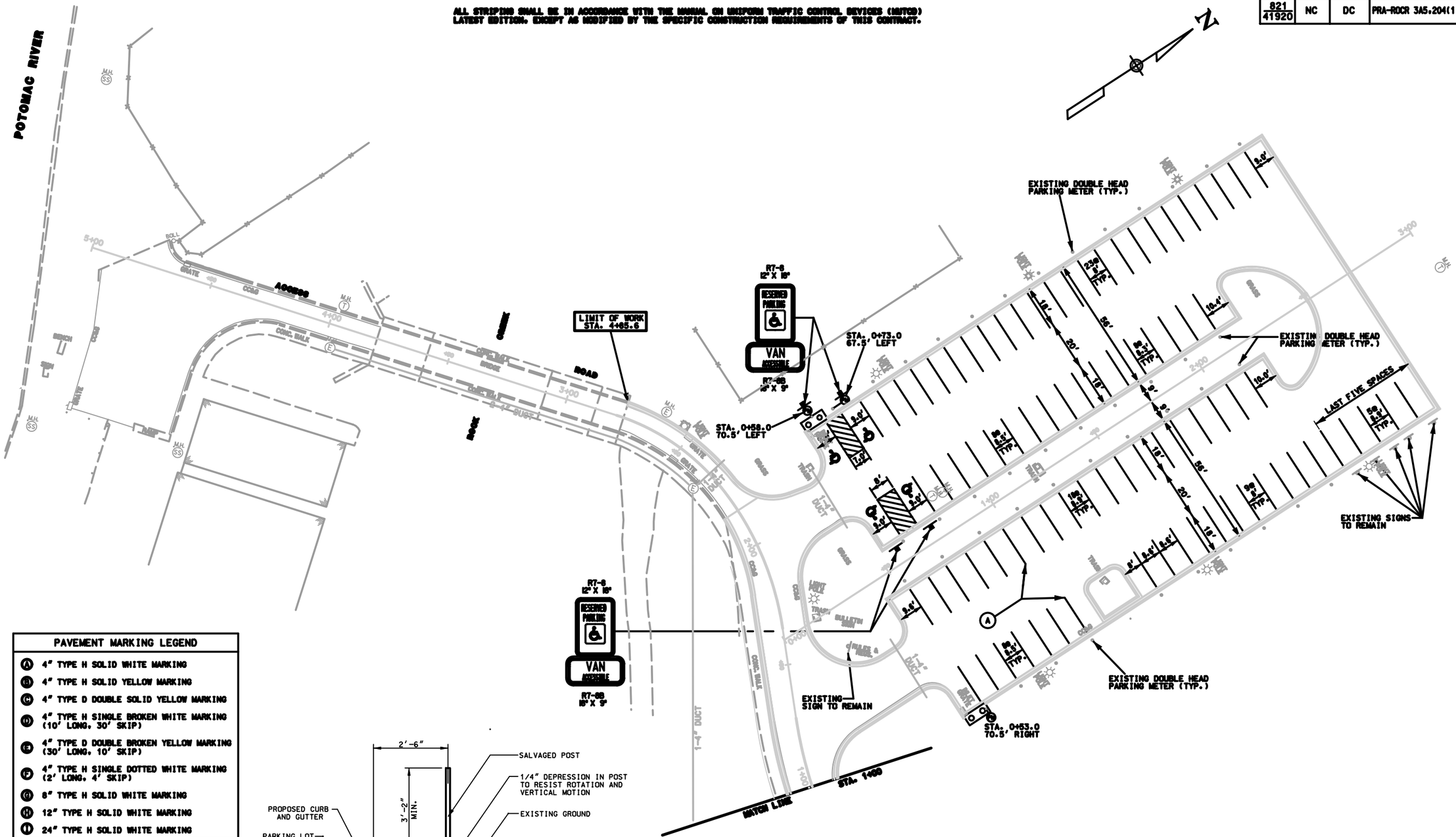

PAVEMENT MARKING LEGEND

- (A) 4" TYPE H SOLID WHITE MARKING
- (B) 4" TYPE H SOLID YELLOW MARKING
- (C) 4" TYPE D DOUBLE SOLID YELLOW MARKING
- (D) 4" TYPE H SINGLE BROKEN WHITE MARKING (10' LONG, 30' SKIP)
- (E) 4" TYPE D DOUBLE BROKEN YELLOW MARKING (30' LONG, 10' SKIP)
- (F) 4" TYPE H SINGLE DOTTED WHITE MARKING (2' LONG, 4' SKIP)
- (G) 8" TYPE H SOLID WHITE MARKING
- (H) 12" TYPE H SOLID WHITE MARKING
- (I) 24" TYPE H SOLID WHITE MARKING

SIGNING LEGEND

- EXISTING SIGN TO REMAIN
- REMOVE AND RESET EXISTING SIGN
- PROPOSED SIGN

PARKING METER LEGEND

- EXISTING PARKING METER TO REMAIN
- (R) REMOVE AND RESET EXISTING PARKING METER

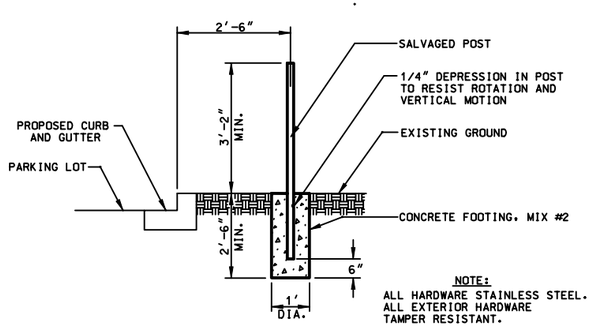

NOTE:
ALL HARDWARE STAINLESS STEEL.
ALL EXTERIOR HARDWARE TAMPER RESISTANT.

PARKING METER FOUNDATION DETAIL
NO SCALE

0 20 40
SCALE IN FEET

U.S. DEPARTMENT OF TRANSPORTATION
FEDERAL HIGHWAY ADMINISTRATION
EASTERN FEDERAL LANDS HIGHWAY DIVISION
STERLING, VIRGINIA

ROCK CREEK AND POTOMAC PARKWAY

THOMPSON'S BOAT CENTER ACCESS ROAD AND PARKING LOT SIGNING AND STRIPING PLAN

...\sp01rock.dgn 8/14/2006 3:07:24 PM

NPS	REG	STATE	PROJECT	SHEET NO.	TOTAL SHEETS
821 41920	NC	DC	PRA-ROCR 3A5.204(1)	76	139

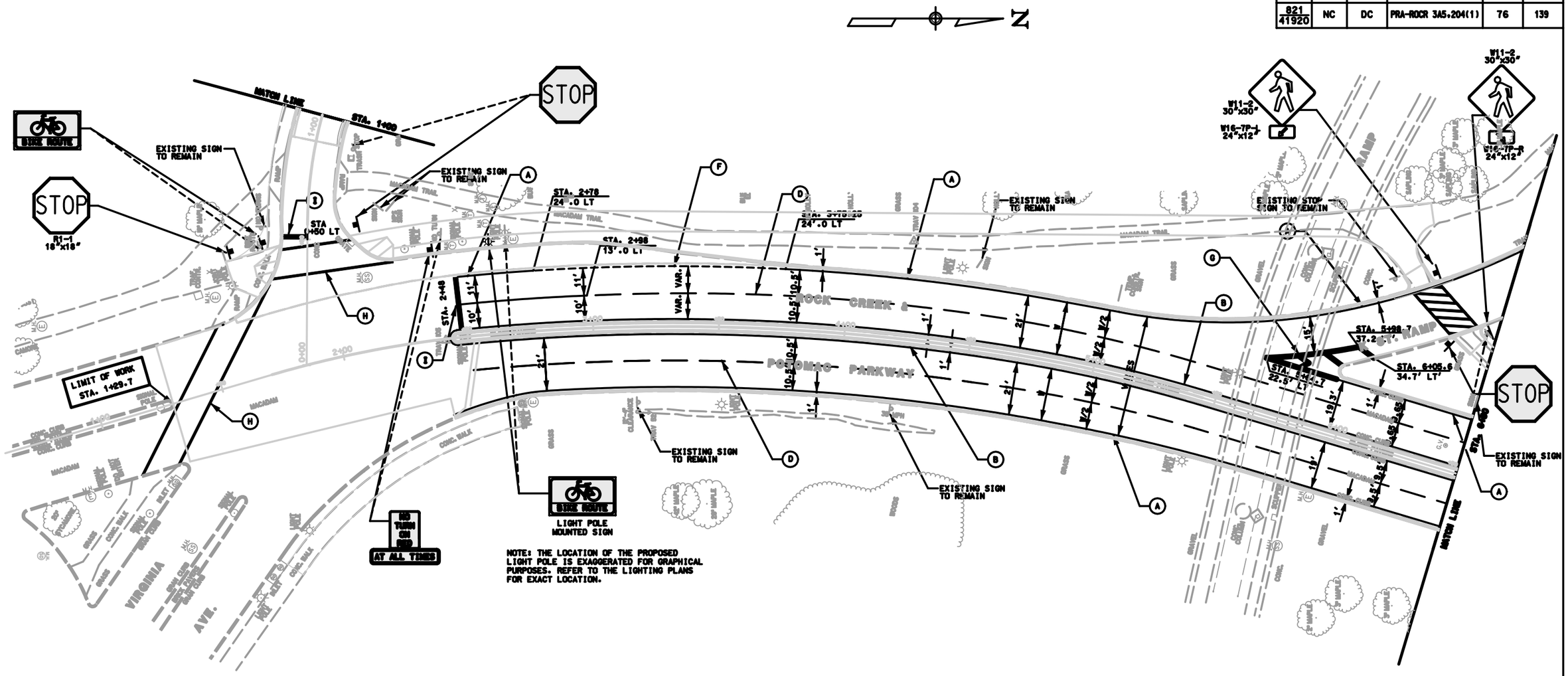

NOTE: THE LOCATION OF THE PROPOSED LIGHT POLE IS EXAGGERATED FOR GRAPHICAL PURPOSES. REFER TO THE LIGHTING PLANS FOR EXACT LOCATION.

PAVEMENT MARKING LEGEND	
A	4" TYPE H SOLID WHITE MARKING
B	4" TYPE H SOLID YELLOW MARKING
C	4" TYPE D DOUBLE SOLID YELLOW MARKING
D	4" TYPE H SINGLE BROKEN WHITE MARKING (10' LONG, 30' SKIP)
E	4" TYPE D DOUBLE BROKEN YELLOW MARKING (30' LONG, 10' SKIP)
F	4" TYPE H SINGLE DOTTED WHITE MARKING (2' LONG, 4' SKIP)
G	8" TYPE H SOLID WHITE MARKING
H	12" TYPE H SOLID WHITE MARKING
I	24" TYPE H SOLID WHITE MARKING

SIGNING LEGEND	
	EXISTING SIGN TO REMAIN
	REMOVE AND RESET EXISTING SIGN
	PROPOSED SIGN

0 20 40
SCALE IN FEET

U.S. DEPARTMENT OF TRANSPORTATION
FEDERAL HIGHWAY ADMINISTRATION
EASTERN FEDERAL LANDS HIGHWAY DIVISION
STERLING, VIRGINIA

ROCK CREEK AND POTOMAC PARKWAY

ROCK CREEK & POTOMAC PARKWAY
STA. 1+29.7 TO STA. 6+50
SIGNING AND STRIPING PLAN

...\sp02rock.dgn 8/14/2006 3:09:38 PM

NPS	REG	STATE	PROJECT	SHEET NO.	TOTAL SHEETS
821 41920	NC	DC	PRA-ROCR 3A5, 204(1)	77	139

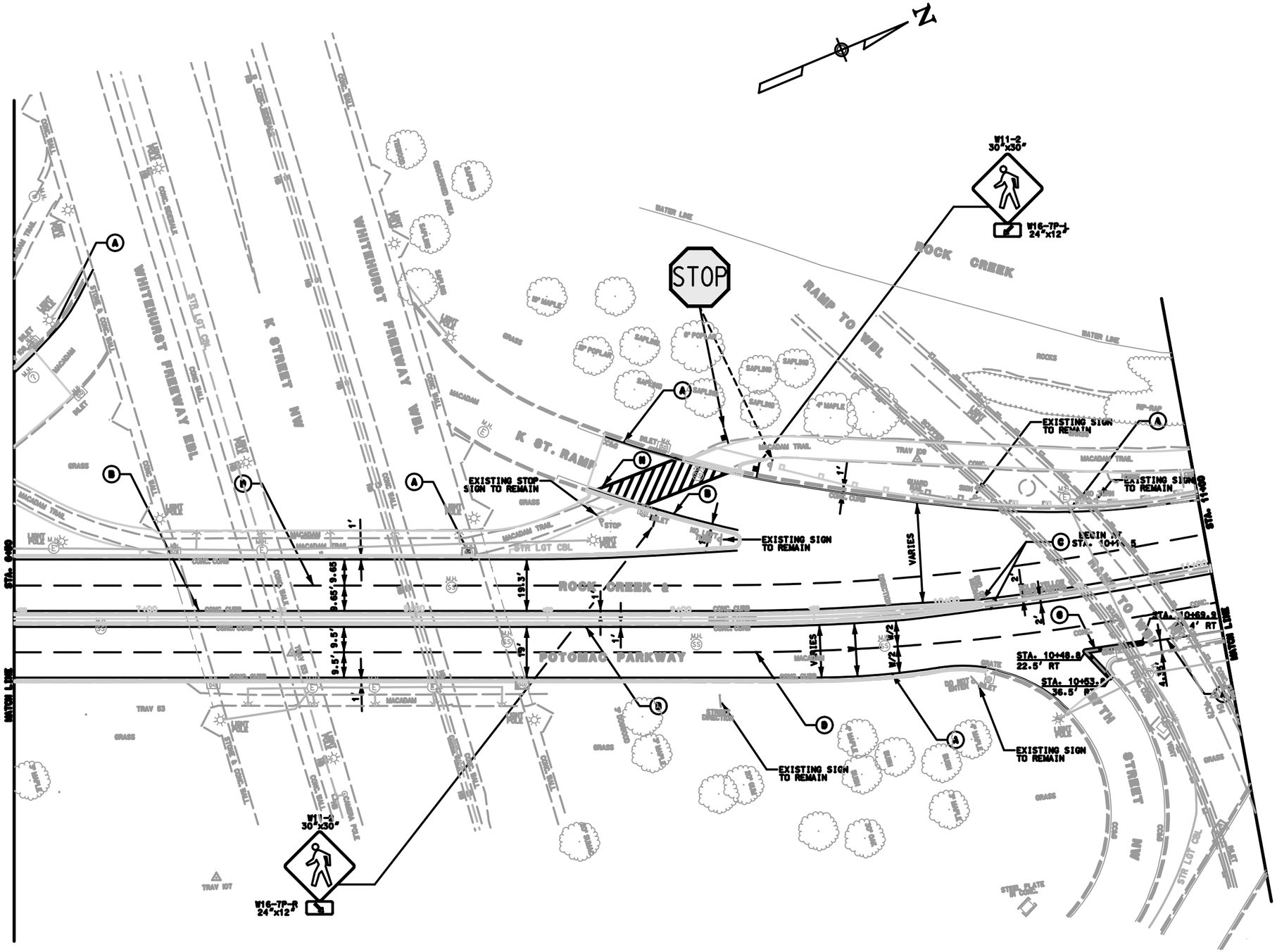

PAVEMENT MARKING LEGEND
(A) 4" TYPE H SOLID WHITE MARKING
(B) 4" TYPE H SOLID YELLOW MARKING
(C) 4" TYPE D DOUBLE SOLID YELLOW MARKING
(D) 4" TYPE H SINGLE BROKEN WHITE MARKING (10' LONG, 30' SKIP)
(E) 4" TYPE D DOUBLE BROKEN YELLOW MARKING (30' LONG, 10' SKIP)
(F) 4" TYPE H SINGLE DOTTED WHITE MARKING (2' LONG, 4' SKIP)
(G) 8" TYPE H SOLID WHITE MARKING
(H) 12" TYPE H SOLID WHITE MARKING
(I) 24" TYPE H SOLID WHITE MARKING
SIGNING LEGEND
EXISTING SIGN TO REMAIN
REMOVE AND RESET EXISTING SIGN
PROPOSED SIGN

0 20 40
SCALE IN FEET

U.S. DEPARTMENT OF TRANSPORTATION
FEDERAL HIGHWAY ADMINISTRATION
EASTERN FEDERAL LANDS HIGHWAY DIVISION
STERLING, VIRGINIA

ROCK CREEK AND POTOMAC PARKWAY

ROCK CREEK & POTOMAC PARKWAY STA. 6+50 TO STA. 11+00 SIGNING AND STRIPING PLAN

...\sp03rock.dgn 8/14/2006 3:11:17 PM

NPS	REG	STATE	PROJECT	SHEET NO.	TOTAL SHEETS
821 / 41920	NC	DC	PRA-ROCR 3A5.204(1)	78	139

PAVEMENT MARKING LEGEND

- (A) 4" TYPE H SOLID WHITE MARKING
- (B) 4" TYPE H SOLID YELLOW MARKING
- (C) 4" TYPE D DOUBLE SOLID YELLOW MARKING
- (D) 4" TYPE H SINGLE BROKEN WHITE MARKING (10' LONG, 30' SKIP)
- (E) 4" TYPE D DOUBLE BROKEN YELLOW MARKING (30' LONG, 10' SKIP)
- (F) 4" TYPE H SINGLE DOTTED WHITE MARKING (2' LONG, 4' SKIP)
- (G) 8" TYPE H SOLID WHITE MARKING
- (H) 12" TYPE H SOLID WHITE MARKING
- (I) 24" TYPE H SOLID WHITE MARKING

SIGNING LEGEND

- EXISTING SIGN TO REMAIN
- REMOVE AND RESET EXISTING SIGN
- PROPOSED SIGN

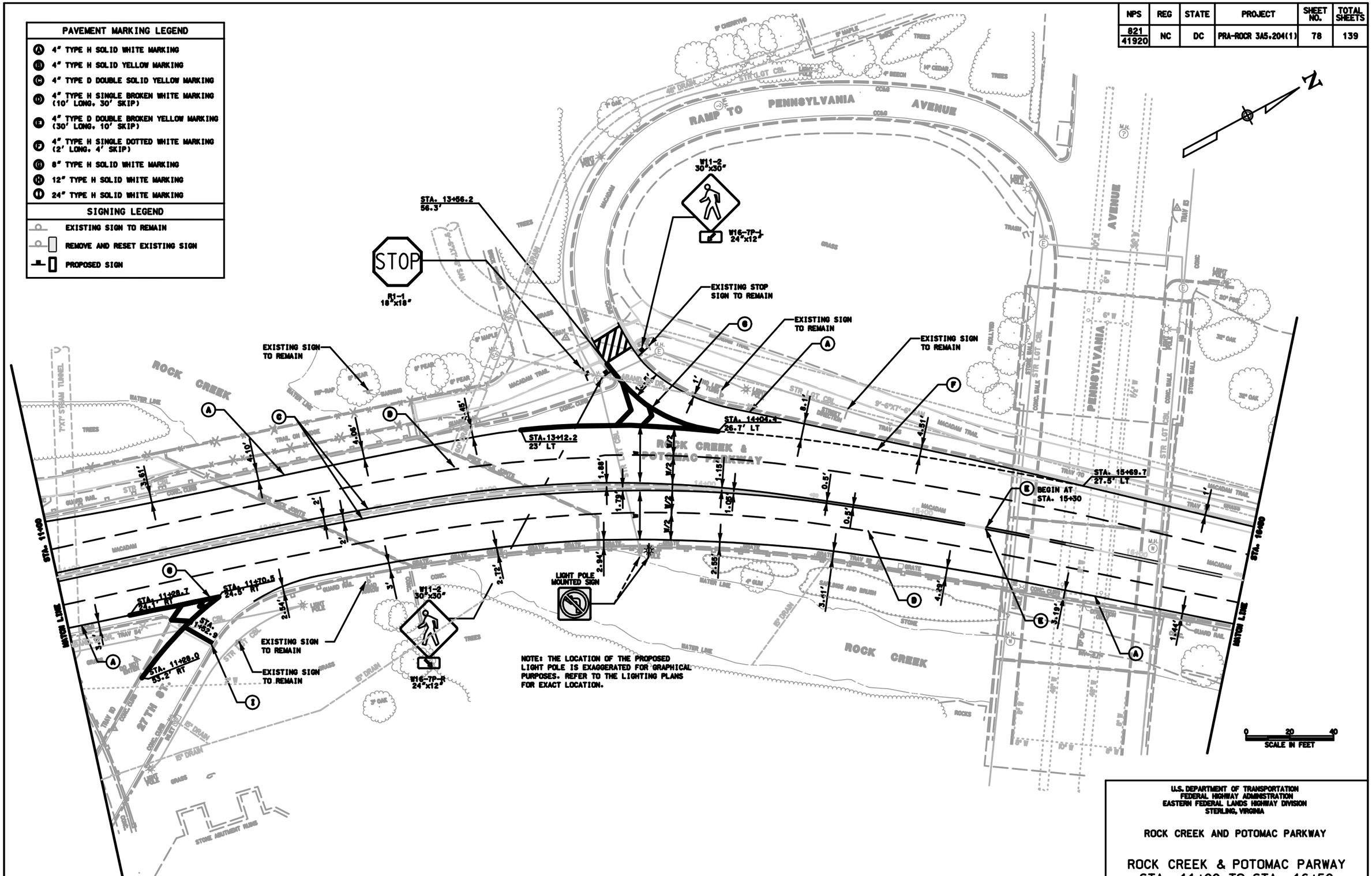

U.S. DEPARTMENT OF TRANSPORTATION
FEDERAL HIGHWAY ADMINISTRATION
EASTERN FEDERAL LANDS HIGHWAY DIVISION
STERLING, VIRGINIA

ROCK CREEK AND POTOMAC PARKWAY

ROCK CREEK & POTOMAC PARWAY
STA. 11+00 TO STA. 16+50
SIGNING AND STRIPING PLAN

...\sp04rock.dgn 8/14/2006 3:12:16 PM

NPS	REG	STATE	PROJECT	SHEET NO.	TOTAL SHEETS
821 41920	NC	DC	PRA-ROCR 3A5.204(1)	79	139

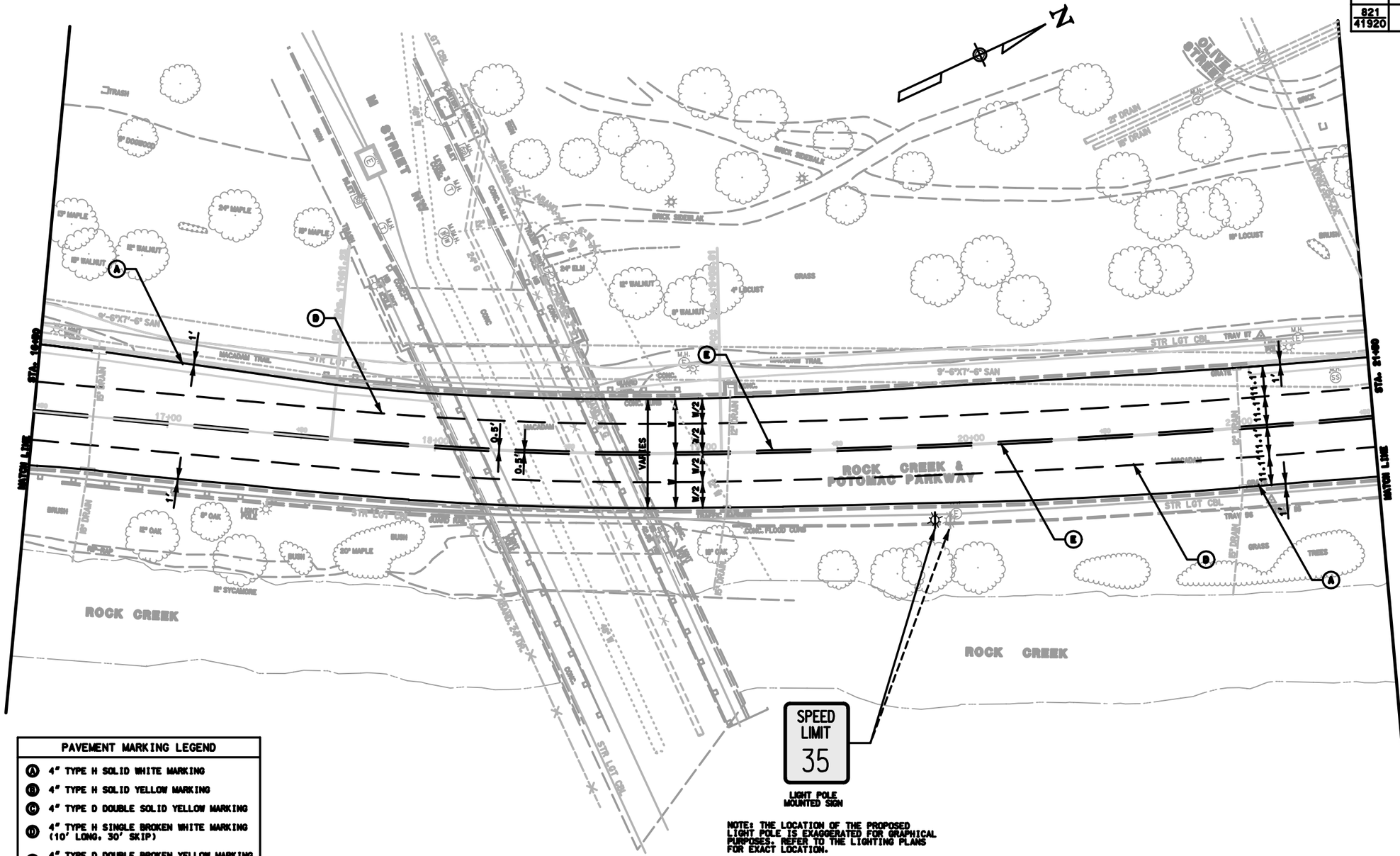

NOTE: THE LOCATION OF THE PROPOSED LIGHT POLE IS EXAGGERATED FOR GRAPHICAL PURPOSES. REFER TO THE LIGHTING PLANS FOR EXACT LOCATION.

PAVEMENT MARKING LEGEND
(A) 4" TYPE H SOLID WHITE MARKING
(B) 4" TYPE H SOLID YELLOW MARKING
(C) 4" TYPE D DOUBLE SOLID YELLOW MARKING
(D) 4" TYPE H SINGLE BROKEN WHITE MARKING (10' LONG, 30' SKIP)
(E) 4" TYPE D DOUBLE BROKEN YELLOW MARKING (30' LONG, 10' SKIP)
(F) 4" TYPE H SINGLE DOTTED WHITE MARKING (2' LONG, 4' SKIP)
(G) 8" TYPE H SOLID WHITE MARKING
(H) 12" TYPE H SOLID WHITE MARKING
(I) 24" TYPE H SOLID WHITE MARKING
SIGNING LEGEND
EXISTING SIGN TO REMAIN
REMOVE AND RESET EXISTING SIGN
PROPOSED SIGN

0 20 40
SCALE IN FEET

U.S. DEPARTMENT OF TRANSPORTATION
FEDERAL HIGHWAY ADMINISTRATION
EASTERN FEDERAL LANDS HIGHWAY DIVISION
STERLING, VIRGINIA

ROCK CREEK AND POTOMAC PARKWAY

ROCK CREEK & POTOMAC PARKWAY
STA. 16+50 TO STA. 21+50
SIGNING AND STRIPING PLAN

...\sp05rock.dgn 8/14/2006 3:15:00 PM

NPS	REG	STATE	PROJECT	SHEET NO.	TOTAL SHEETS
821 / 41920	NC	DC	PRA-ROCR 3A5.204(1)	80	139

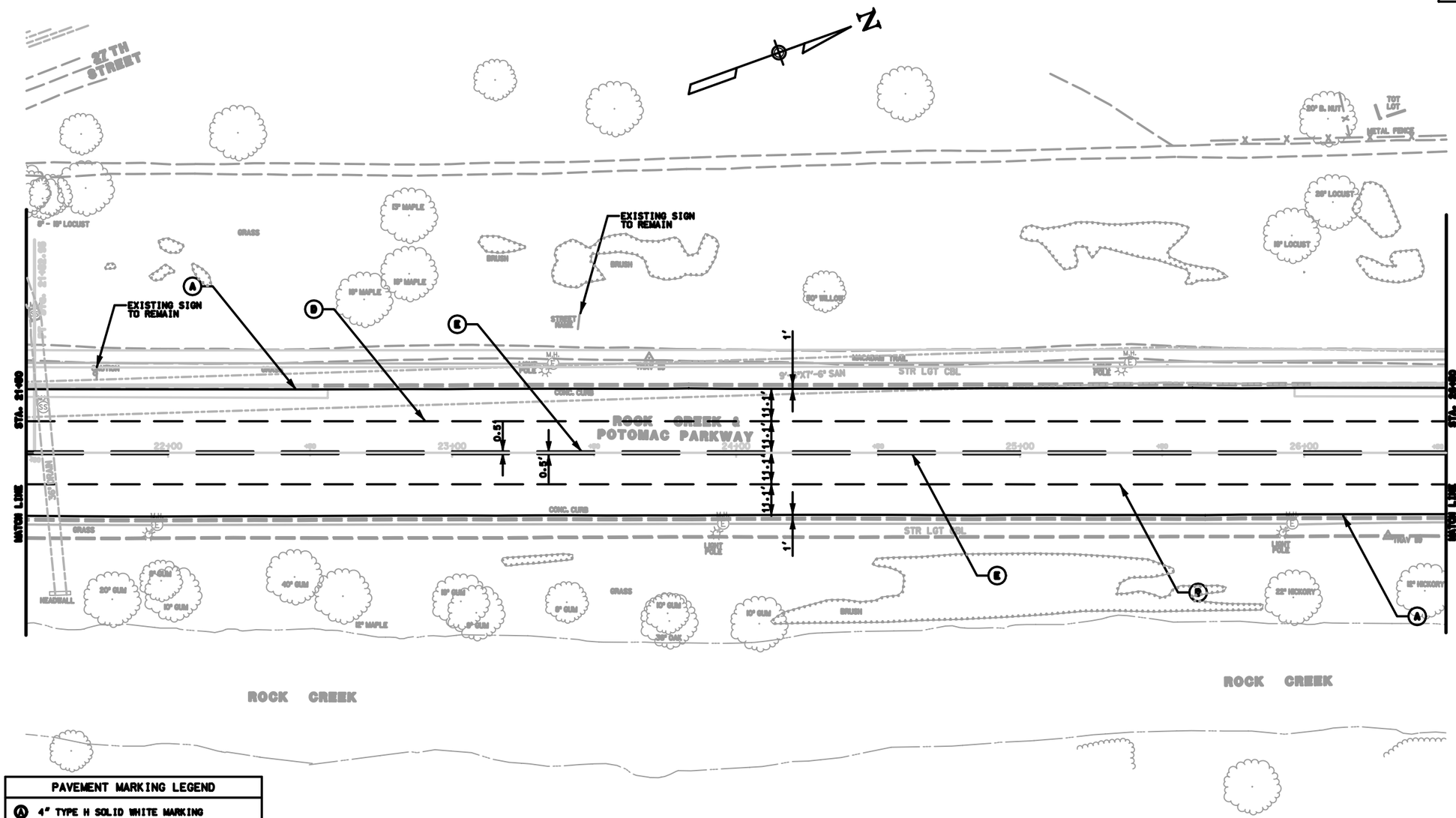

PAVEMENT MARKING LEGEND
(A) 4" TYPE H SOLID WHITE MARKING
(B) 4" TYPE H SOLID YELLOW MARKING
(C) 4" TYPE D DOUBLE SOLID YELLOW MARKING
(D) 4" TYPE H SINGLE BROKEN WHITE MARKING (10' LONG, 30' SKIP)
(E) 4" TYPE D DOUBLE BROKEN YELLOW MARKING (30' LONG, 10' SKIP)
(F) 4" TYPE H SINGLE DOTTED WHITE MARKING (2' LONG, 4' SKIP)
(G) 8" TYPE H SOLID WHITE MARKING
(H) 12" TYPE H SOLID WHITE MARKING
(I) 24" TYPE H SOLID WHITE MARKING

SIGNING LEGEND
EXISTING SIGN TO REMAIN
REMOVE AND RESET EXISTING SIGN
PROPOSED SIGN

0 20 40
SCALE IN FEET

U.S. DEPARTMENT OF TRANSPORTATION
FEDERAL HIGHWAY ADMINISTRATION
EASTERN FEDERAL LANDS HIGHWAY DIVISION
STERLING, VIRGINIA

ROCK CREEK AND POTOMAC PARKWAY

ROCK CREEK & POTOMAC PARKWAY
STA. 21+50 TO STA. 26+50
SIGNING AND STRIPING PLAN

...\sp06rock.dgn 8/14/2006 3:15:53 PM

NPS	REG	STATE	PROJECT	SHEET NO.	TOTAL SHEETS
821 / 41920	NC	DC	PRA-ROCR 3A5.204(1)	81	139

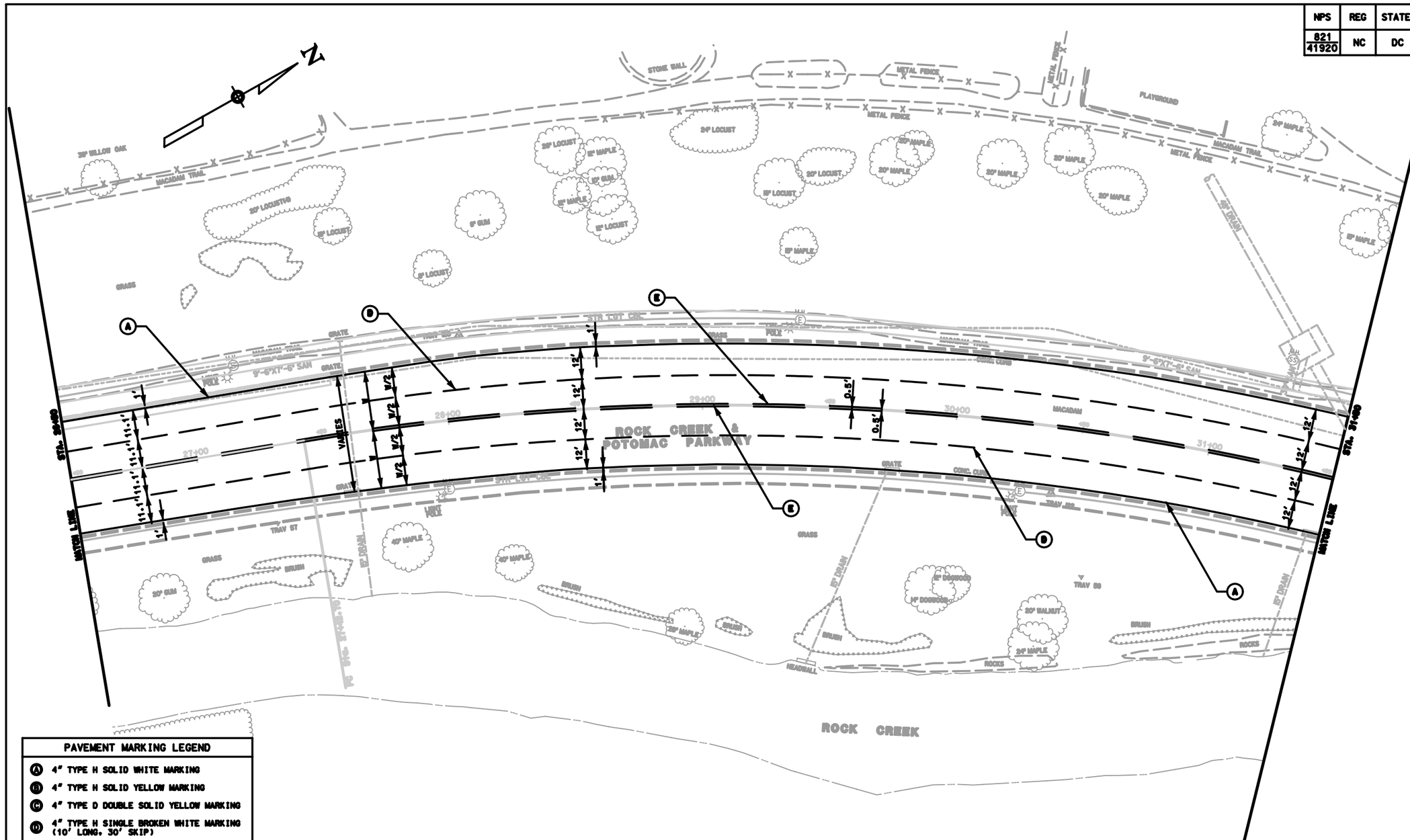

PAVEMENT MARKING LEGEND

- (A) 4" TYPE H SOLID WHITE MARKING
- (B) 4" TYPE H SOLID YELLOW MARKING
- (C) 4" TYPE D DOUBLE SOLID YELLOW MARKING
- (D) 4" TYPE H SINGLE BROKEN WHITE MARKING (10' LONG, 30' SKIP)
- (E) 4" TYPE D DOUBLE BROKEN YELLOW MARKING (30' LONG, 10' SKIP)
- (F) 4" TYPE H SINGLE DOTTED WHITE MARKING (2' LONG, 4' SKIP)
- (G) 8" TYPE H SOLID WHITE MARKING
- (H) 12" TYPE H SOLID WHITE MARKING
- (I) 24" TYPE H SOLID WHITE MARKING

SIGNING LEGEND

- EXISTING SIGN TO REMAIN
- REMOVE AND RESET EXISTING SIGN
- PROPOSED SIGN

U.S. DEPARTMENT OF TRANSPORTATION
FEDERAL HIGHWAY ADMINISTRATION
EASTERN FEDERAL LANDS HIGHWAY DIVISION
STERLING, VIRGINIA

ROCK CREEK AND POTOMAC PARKWAY

ROCK CREEK & POTOMAC PARKWAY STA. 26+50 TO STA. 31+50 SIGNING AND STRIPING PLAN

...\sp07rock.dgn 8/14/2006 3:16:46 PM

NPS	REG	STATE	PROJECT	SHEET NO.	TOTAL SHEETS
821 41920	NC	DC	PRA-ROCR 3A5.204(1)	82	139

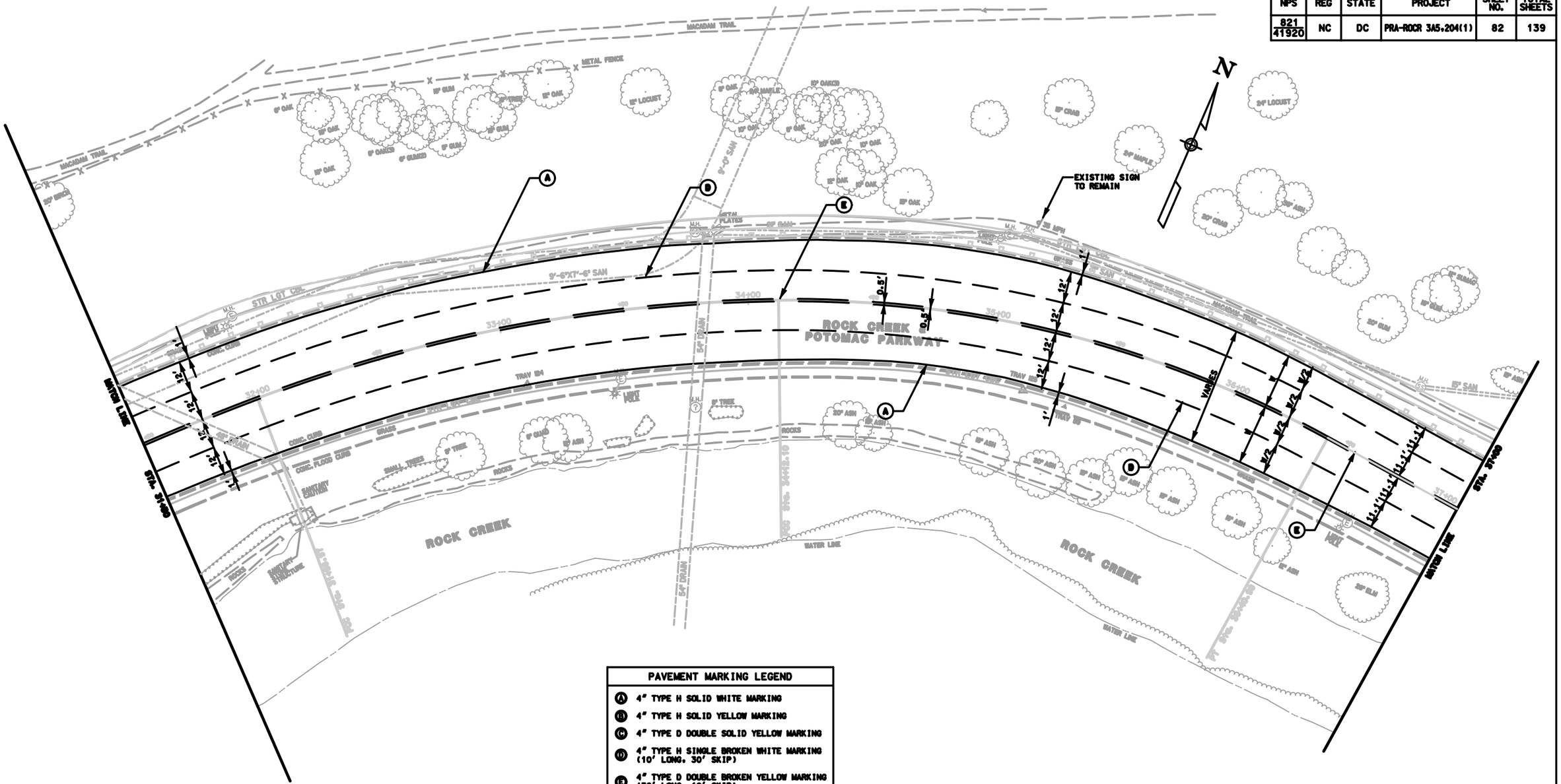

PAVEMENT MARKING LEGEND	
A	4" TYPE H SOLID WHITE MARKING
B	4" TYPE H SOLID YELLOW MARKING
C	4" TYPE D DOUBLE SOLID YELLOW MARKING
D	4" TYPE H SINGLE BROKEN WHITE MARKING (10' LONG, 30' SKIP)
E	4" TYPE D DOUBLE BROKEN YELLOW MARKING (30' LONG, 10' SKIP)
F	4" TYPE H SINGLE DOTTED WHITE MARKING (2' LONG, 4' SKIP)
G	8" TYPE H SOLID WHITE MARKING
H	12" TYPE H SOLID WHITE MARKING
I	24" TYPE H SOLID WHITE MARKING

SIGNING LEGEND	
	EXISTING SIGN TO REMAIN
	REMOVE AND RESET EXISTING SIGN
	PROPOSED SIGN

0 20 40
SCALE IN FEET

U.S. DEPARTMENT OF TRANSPORTATION
FEDERAL HIGHWAY ADMINISTRATION
EASTERN FEDERAL LANDS HIGHWAY DIVISION
STERLING, VIRGINIA

ROCK CREEK AND POTOMAC PARKWAY

ROCK CREEK & POTOMAC PARKWAY
STA. 31+50 TO STA. 37+00
SIGNING AND STRIPING PLAN

...\sp08rock.dgn 8/14/2006 3:17:35 PM

NPS	REG	STATE	PROJECT	SHEET NO.	TOTAL SHEETS
821 / 41920	NC	DC	PRA-ROCR 3A5.204(1)	83	139

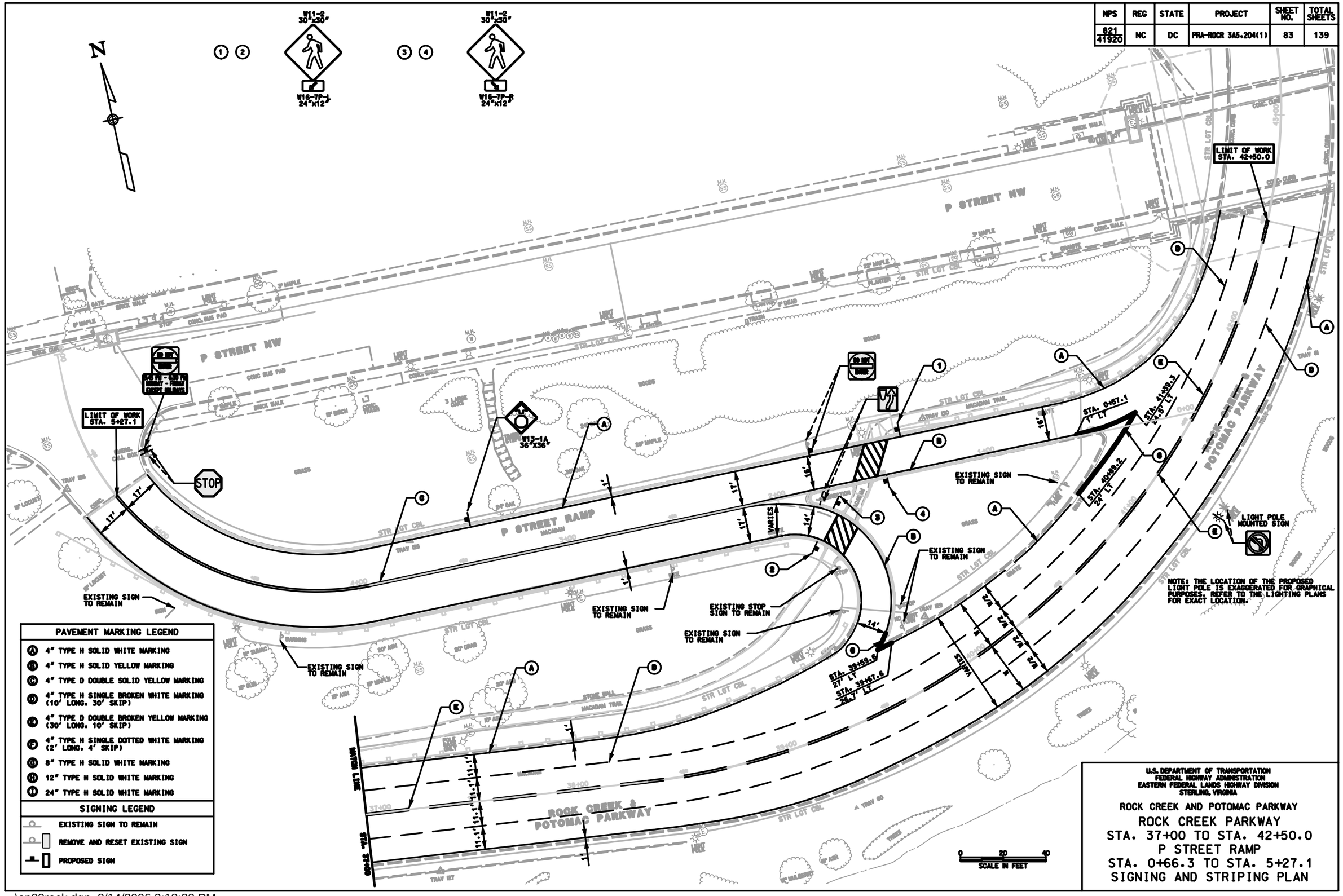

PAVEMENT MARKING LEGEND

- (A) 4" TYPE H SOLID WHITE MARKING
- (B) 4" TYPE H SOLID YELLOW MARKING
- (C) 4" TYPE D DOUBLE SOLID YELLOW MARKING
- (D) 4" TYPE H SINGLE BROKEN WHITE MARKING (10' LONG, 30' SKIP)
- (E) 4" TYPE D DOUBLE BROKEN YELLOW MARKING (30' LONG, 10' SKIP)
- (F) 4" TYPE H SINGLE DOTTED WHITE MARKING (2' LONG, 4' SKIP)
- (G) 8" TYPE H SOLID WHITE MARKING
- (H) 12" TYPE H SOLID WHITE MARKING
- (I) 24" TYPE H SOLID WHITE MARKING

SIGNING LEGEND

- EXISTING SIGN TO REMAIN
- REMOVE AND RESET EXISTING SIGN
- PROPOSED SIGN

U.S. DEPARTMENT OF TRANSPORTATION
FEDERAL HIGHWAY ADMINISTRATION
EASTERN FEDERAL LANDS HIGHWAY DIVISION
STERLING, VIRGINIA

ROCK CREEK AND POTOMAC PARKWAY

ROCK CREEK PARKWAY
STA. 37+00 TO STA. 42+50.0
P STREET RAMP
STA. 0+66.3 TO STA. 5+27.1
SIGNING AND STRIPING PLAN

...\sp09rock.dgn 8/14/2006 3:18:22 PM

NPS	REG	STATE	PROJECT	SHEET NO.	TOTAL SHEETS
821 41920	NC	DC	PRA-RGCR 3A5. 20(1)	84	139

NOTE: CONTRACTOR MUST AVOID DISTURBING EXISTING TREES DURING THE PLACEMENT OF TRENCHED CONDUIT.

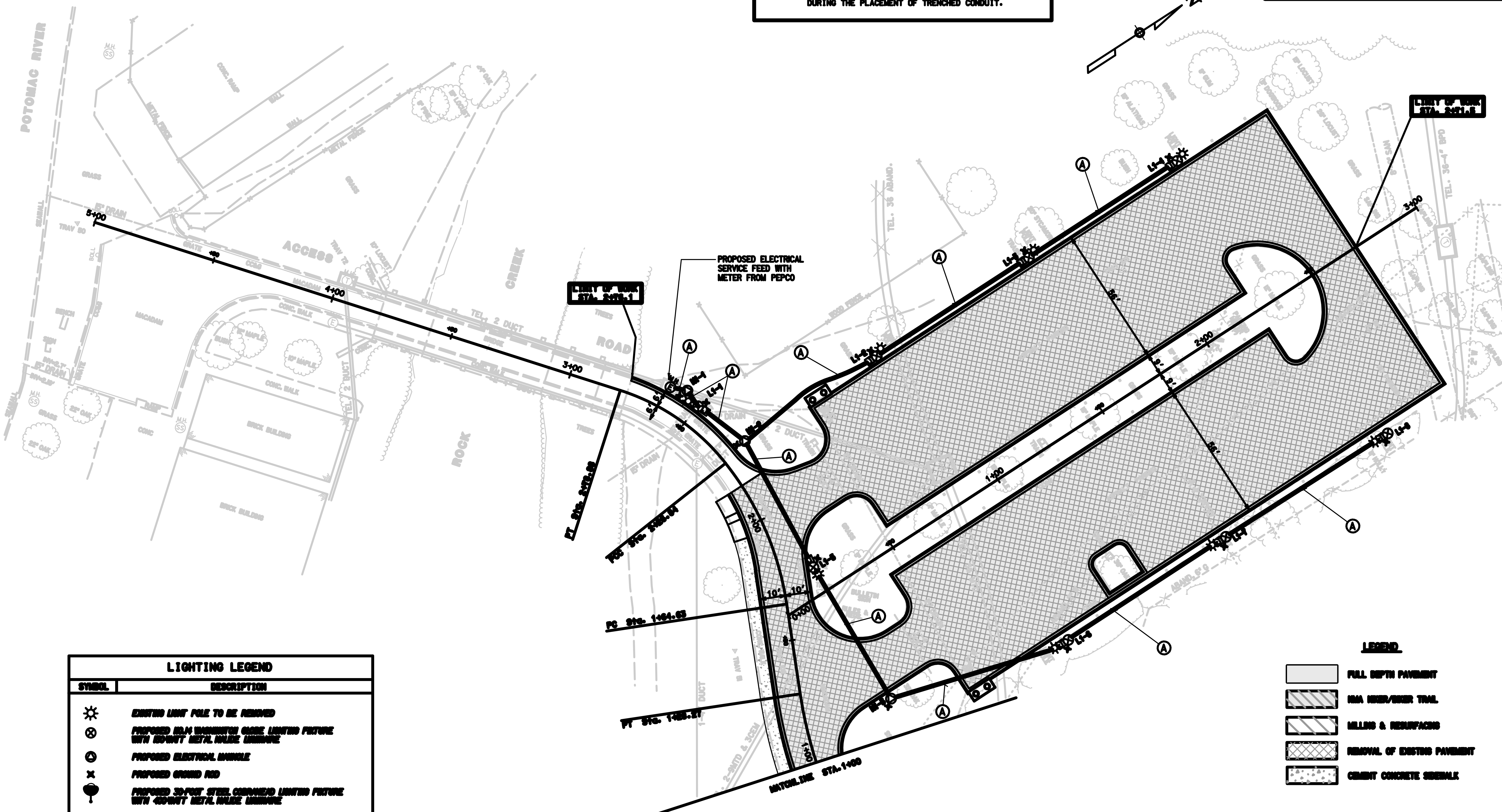

LIGHTING LEGEND

SYMBOL	DESCRIPTION
☼	EXISTING LIGHT POLE TO BE REMOVED
⊗	PROPOSED NO.14 WASHINGTON GLOBE LIGHTING FIXTURE WITH 150-WATT METAL HALIDE LUMINAIRE
Ⓐ (triangle)	PROPOSED ELECTRICAL MANHOLE
×	PROPOSED GROUND ROD
(cobrahead)	PROPOSED 30-FOOT STEEL COBRAHEAD LIGHTING FIXTURE WITH 400-WATT METAL HALIDE LUMINAIRE
J	PROPOSED JUNCTION BOX
Ⓐ	PROPOSED 2-INCH PVC CONDUIT (SCHEDULE 40) WITH 4-#4 AWG CONDUCTOR WIRES AND 1-#8 GROUND
Ⓔ	EXISTING ELECTRICAL MANHOLE TO REMAIN
Ⓑ	PROPOSED 2-INCH PVC CONDUIT (SCHEDULE 40) WITH 4-#4 AWG CONDUCTOR WIRES AND 1-#8 GROUND INSIDE 4-INCH RIGID GALVANIZED STEEL CONDUIT (BORED)

LEGEND

- FULL DEPTH PAVEMENT
- HMA HIKER/BIKER TRAIL
- MILLING & RESURFACING
- REMOVAL OF EXISTING PAVEMENT
- CEMENT CONCRETE SIDEWALK

L-1

U.S. DEPARTMENT OF TRANSPORTATION
FEDERAL HIGHWAY ADMINISTRATION
EASTERN FEDERAL LANDS HIGHWAY DIVISION
STERLING, VIRGINIA

THOMPSON'S BOAT CENTER ACCESS ROAD AND PARKING LOT LIGHTING PLAN

NPS	REG	STATE	PROJECT	SHEET NO.	TOTAL SHEETS
021 41920	NC	DC	FRA-ROCR 395, 20K(1)	85	139

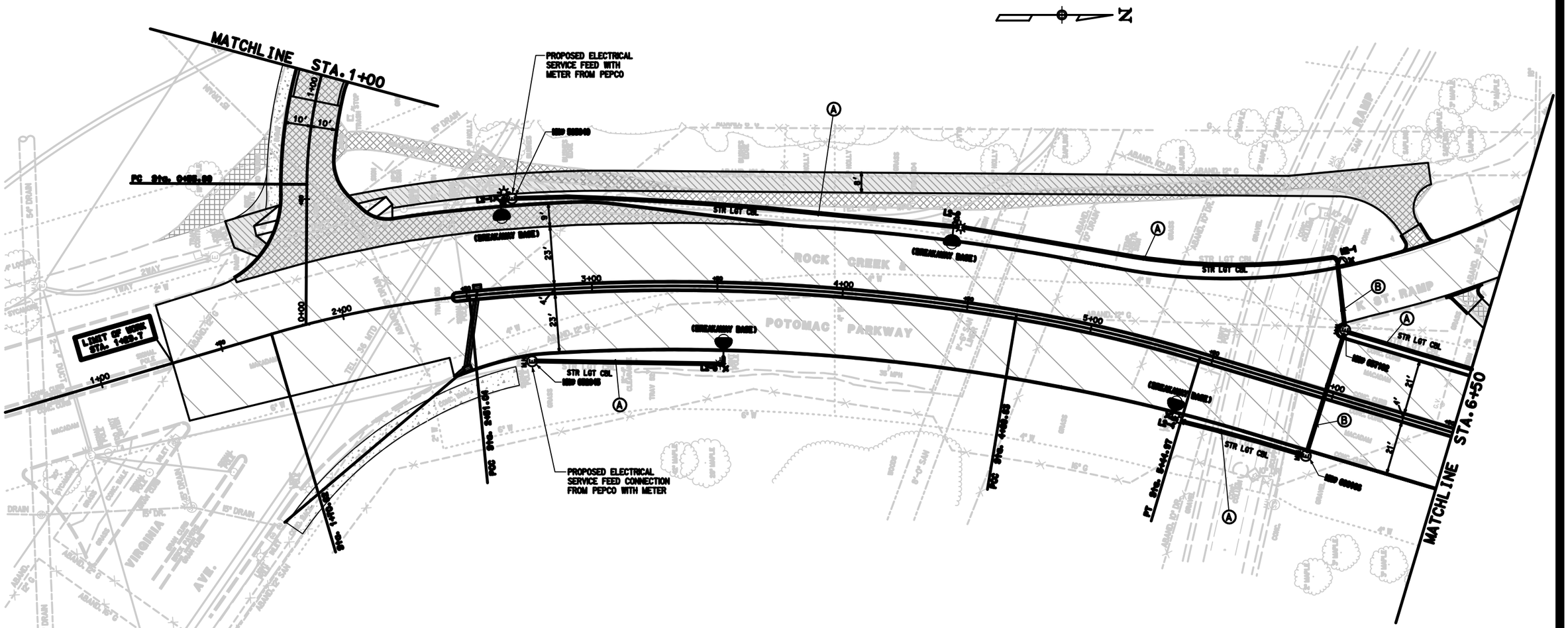

LIGHTING LEGEND

SYMBOL	DESCRIPTION
	EXISTING LIGHT POLE TO BE REMOVED
	PROPOSED 10.4 WASHINGTON GLOBE LIGHTING FIXTURE WITH 150WATT METAL HALIDE LAMPAGE
	PROPOSED ELECTRICAL HANDHOLE
	PROPOSED GROUND ROD
	PROPOSED 30-FOOT STEEL CORONADO LIGHTING FIXTURE WITH 400WATT METAL HALIDE LAMPAGE
	PROPOSED JUNCTION BOX
A	PROPOSED 2-INCH PVC CONDUIT (SCHEDULE 40) WITH 4#4 AWG CONDUCTOR WIRES AND 1#6 GROUND
E	EXISTING ELECTRICAL HANDHOLE TO REMAIN
B	PROPOSED 2-INCH PVC CONDUIT (SCHEDULE 40) WITH 4#4 AWG CONDUCTOR WIRES AND 1#6 GROUND WIRE 4-INCH RIGID GALVANIZED STEEL CONDUIT (GRADED)

LEGEND

- FULL DEPTH PAVEMENT
- HMA HIKER/BIKER TRAIL
- MILLING & RESURFACING
- REMOVAL OF EXISTING PAVEMENT
- CEMENT CONCRETE SIDEWALK

0 20 40
SCALE IN FEET

L-2

U.S. DEPARTMENT OF TRANSPORTATION
FEDERAL HIGHWAY ADMINISTRATION
EASTERN FEDERAL LANDS HIGHWAY DIVISION
STERLING, VIRGINIA

ROCK CREEK & POTOMAC PARKWAY VIRGINIA AVE. TO STA. 6+50 LIGHTING PLAN

...\sl02rock.dgn 8/14/2006 4:15:34 PM

NPS	REG	STATE	PROJECT	SHEET NO.	TOTAL SHEETS
021 41920	NC	DC	RM-RCR 3S. 20H(1)	86	139

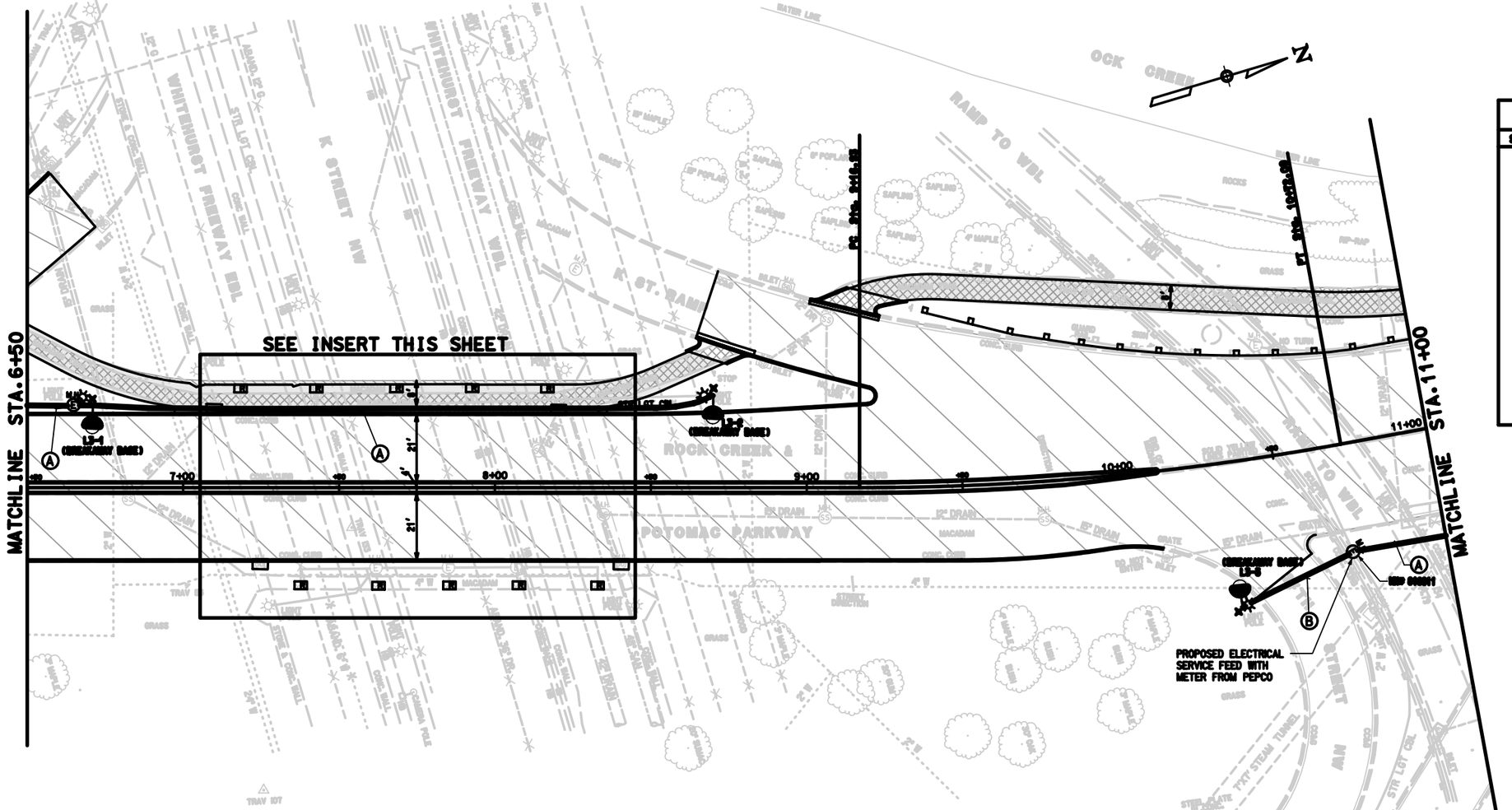

LIGHTING LEGEND

SYMBOL	DESCRIPTION
	EXISTING LIGHT POLE TO BE REMOVED
	PROPOSED 60W INCANDESCENT GLOBE LIGHTING FIXTURE WITH 60WATT METAL HALIDE LUMINAIRE
A	PROPOSED ELECTRICAL HANDHOLE
	PROPOSED GROUND ROD
	PROPOSED 30-FOOT STEEL CORRUGATED LIGHTING FIXTURE WITH 400WATT METAL HALIDE LUMINAIRE
J	PROPOSED JUNCTION BOX
A	PROPOSED 3-INCH PVC CONDUIT (SCHEDULE 40) WITH 4-#4 AWG CONDUCTOR WIRES AND 1-#6 GROUND
E	EXISTING ELECTRICAL HANDHOLE TO REMAIN
B	PROPOSED 3-INCH PVC CONDUIT (SCHEDULE 40) WITH 4-#4 AWG CONDUCTOR WIRES AND 1-#6 GROUND WIRE 4-INCH ROUND GALVANIZED STEEL CONDUIT (BORED)

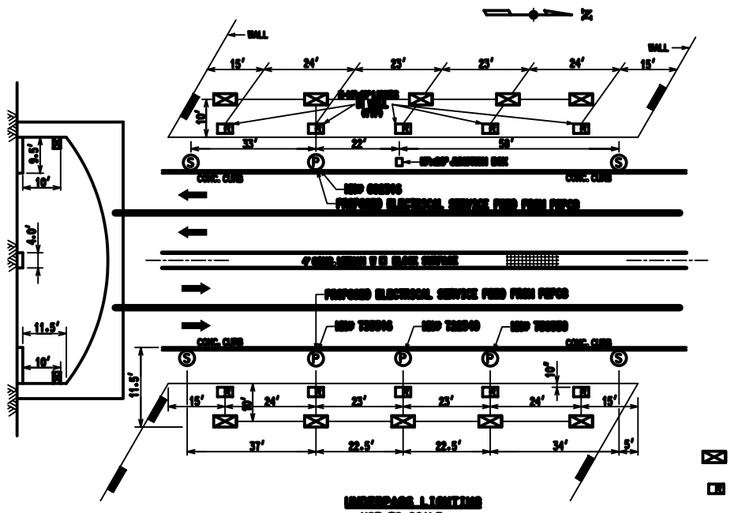

UNDERPASS LIGHTING
NOT TO SCALE

UNDERPASS LIGHTING LEGEND

- FURNISH AND INSTALL RD-BATT_NPS UNDERPASS WALLPACK LUMINAIRE
- REMOVE EXISTING UNDERPASS LUMINAIRE

LEGEND

- FULL DEPTH PAVEMENT
- NMA HIKER/BIKER TRAIL
- MILLING & RESURFACING
- REMOVAL OF EXISTING PAVEMENT
- CEMENT CONCRETE SIDEWALK

0 20 40
SCALE IN FEET

L-3

U.S. DEPARTMENT OF TRANSPORTATION
FEDERAL HIGHWAY ADMINISTRATION
EASTERN FEDERAL LANDS HIGHWAY DIVISION
STERLING, VIRGINIA

ROCK CREEK & POTOMAC PARKWAY STA. 6+50 TO STA. 11+00 LIGHTING PLAN

...\sl03rock.dgn 8/14/2006 4:16:15 PM

NPS	REG	STATE	PROJECT	SHEET NO.	TOTAL SHEETS
621 41920	NC	DC	FRA-ROCR 36L. 20K(1)	87	139

LIGHTING LEGEND

SYMBOL	DESCRIPTION
	EXISTING LIGHT POLE TO BE REMOVED
	PROPOSED 60/A WASHINGTON GLOBE LIGHTING FIXTURE WITH 60-WATT METAL HALIDE LUMINAIRE
A	PROPOSED ELECTRICAL HANDHOLE
	PROPOSED GROUND ROD
	PROPOSED 30-FOOT STEEL COBRAHEAD LIGHTING FIXTURE WITH 400-WATT METAL HALIDE LUMINAIRE
J	PROPOSED JUNCTION BOX
A	PROPOSED 2-INCH PVC CONDUIT (SCHEDULE 40) WITH 4-#4/0 CONDUCTOR WIRES AND 1-#8 GROUND
E	EXISTING ELECTRICAL HANDHOLE TO REMAIN
B	PROPOSED 2-INCH PVC CONDUIT (SCHEDULE 40) WITH 4-#4 AWG CONDUCTOR WIRES AND 1-#8 GROUND WIRE 4-INCH RIGID GALVANIZED STEEL CONDUIT (GRADED)

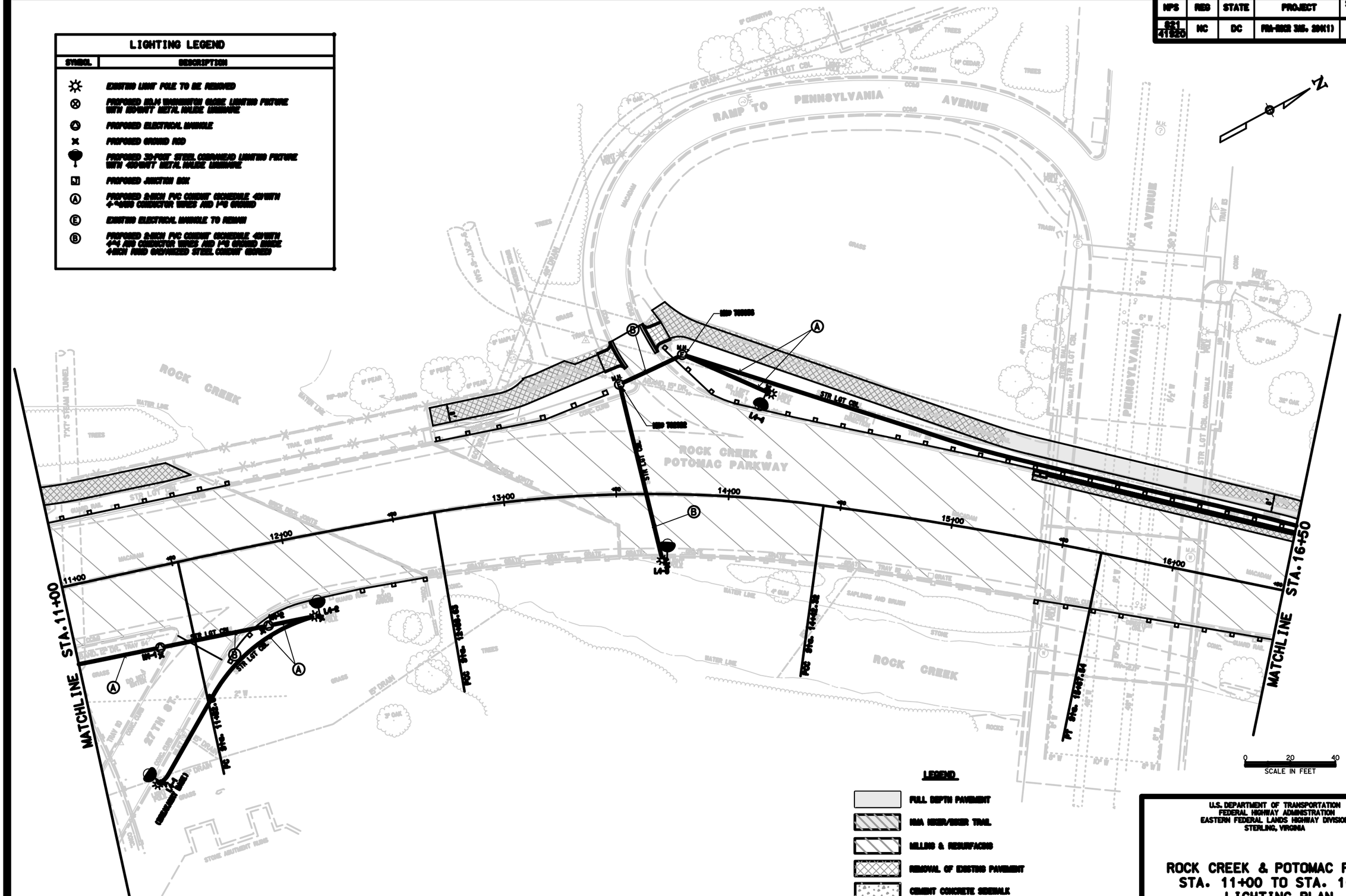

L-4

U.S. DEPARTMENT OF TRANSPORTATION
FEDERAL HIGHWAY ADMINISTRATION
EASTERN FEDERAL LANDS HIGHWAY DIVISION
STERLING, VIRGINIA

ROCK CREEK & POTOMAC PARWAY
STA. 11+00 TO STA. 16+50
LIGHTING PLAN

...\sl04rock.dgn 8/14/2006 4:16:58 PM

NPS	REG	STATE	PROJECT	SHEET NO.	TOTAL SHEETS
621 41920	NC	DC	FRA-ROCR 3(6, 204(1)	88	139

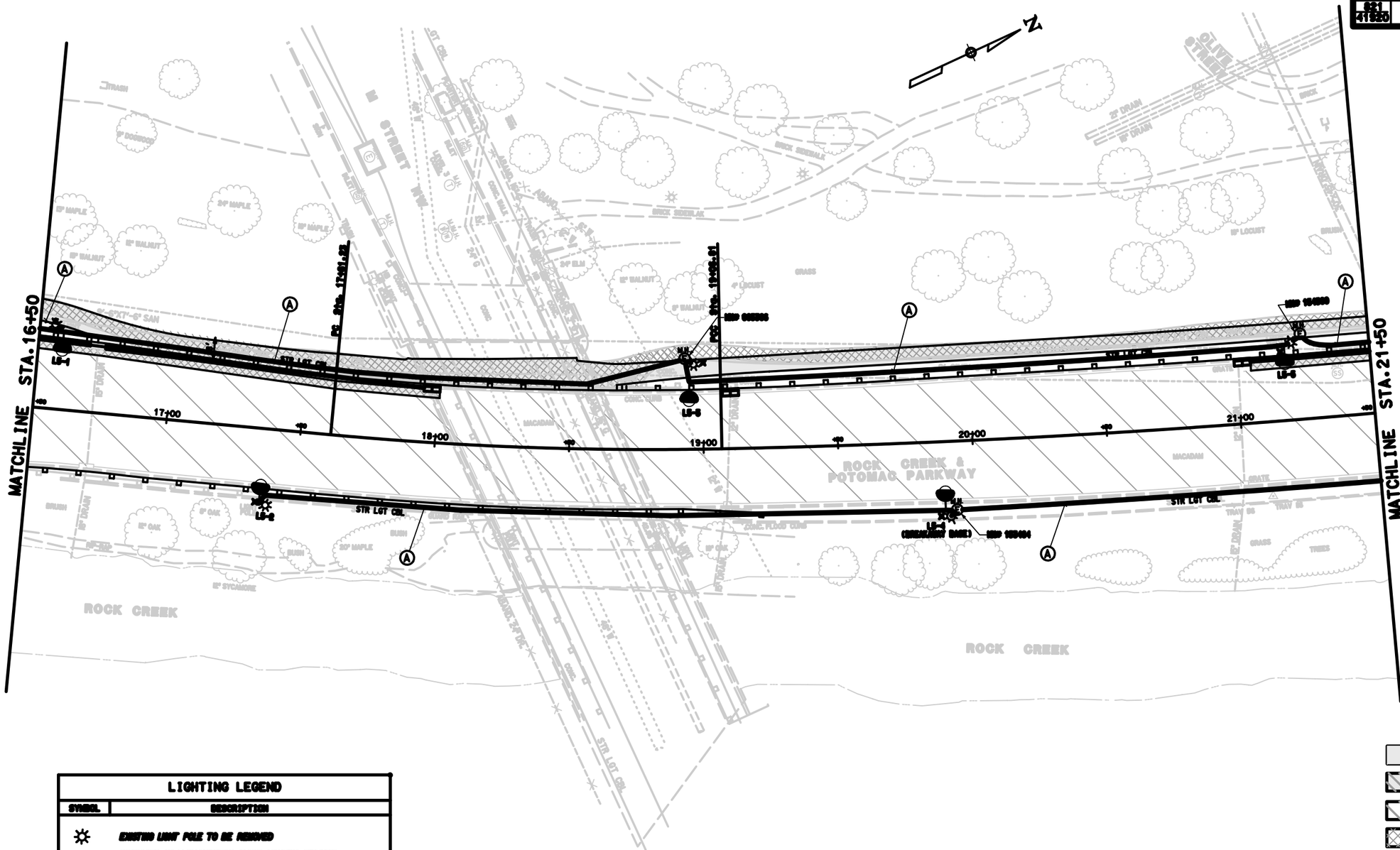

LIGHTING LEGEND

SYMBOL	DESCRIPTION
☼	EXISTING LIGHT POLE TO BE REMOVED
⊗	PROPOSED 100-W WASHINGTON GLOBE LIGHTING FIXTURE WITH 100-WATT METAL HALIDE LUMINAIRE
Ⓐ	PROPOSED ELECTRICAL HANDHOLE
✖	PROPOSED GROUND ROD
🌳	PROPOSED 30-FOOT STEEL CORRUGATED LIGHTING FIXTURE WITH 400-WATT METAL HALIDE LUMINAIRE
JB	PROPOSED JUNCTION BOX
Ⓐ	PROPOSED 2-INCH PVC CONDUIT (SCHEDULE 40) WITH 4-#4 AWG CONDUCTOR WIRES AND 1-#8 GROUND
Ⓔ	EXISTING ELECTRICAL HANDHOLE TO REMAIN
Ⓑ	PROPOSED 2-INCH PVC CONDUIT (SCHEDULE 40) WITH 4-#4 AWG CONDUCTOR WIRES AND 1-#8 GROUND WIRE 4-INCH RIGID GALVANIZED STEEL CONDUIT (GRSC)

LEGEND

- FULL DEPTH PAVEMENT
- HMA HIKER/BIKER TRAIL
- MILLING & RESURFACING
- REMOVAL OF EXISTING PAVEMENT
- CEMENT CONCRETE SIDEWALK

0 20 40
SCALE IN FEET

L-5

U.S. DEPARTMENT OF TRANSPORTATION
FEDERAL HIGHWAY ADMINISTRATION
EASTERN FEDERAL LANDS HIGHWAY DIVISION
STERLING, VIRGINIA

ROCK CREEK & POTOMAC PARKWAY
STA. 16+50 TO STA. 21+50
LIGHTING PLAN

...\sl05rock.dgn 8/14/2006 4:17:38 PM

NPS	REG	STATE	PROJECT	SHEET NO.	TOTAL SHEETS
621 41920	NC	DC	FRA-ROCR 3(6, 20(1)	69	139

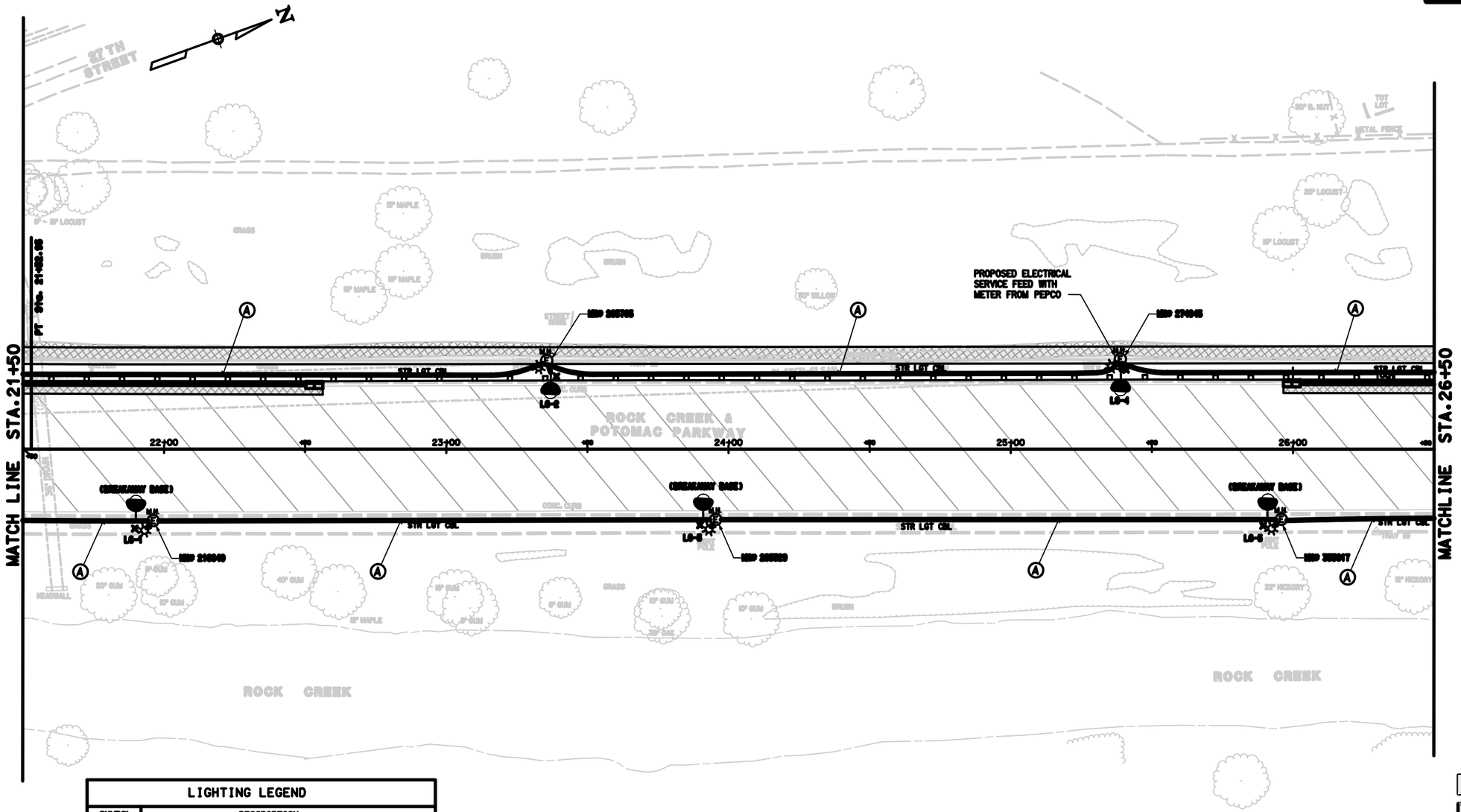

LIGHTING LEGEND

SYMBOL	DESCRIPTION
☼	EXISTING LIGHT POLE TO BE REMOVED
⊗	PROPOSED NO.14 WASHINGTON GLOBE LIGHTING FIXTURE WITH 150-WATT METAL HALIDE LUMINAIRE
Ⓐ	PROPOSED ELECTRICAL MANHOLE
✖	PROPOSED GROUND ROD
	PROPOSED 30-FOOT STEEL COBRAHEAD LIGHTING FIXTURE WITH 400-WATT METAL HALIDE LUMINAIRE
J	PROPOSED JUNCTION BOX
Ⓐ	PROPOSED 2-INCH PVC CONDUIT (SCHEDULE 40) WITH 4-#4 AWG CONDUCTOR WIRES AND 1-#8 GROUND
Ⓔ	EXISTING ELECTRICAL MANHOLE TO REMAIN
Ⓑ	PROPOSED 2-INCH PVC CONDUIT (SCHEDULE 40) WITH 4-#4 AWG CONDUCTOR WIRES AND 1-#8 GROUND INSIDE 4-INCH RIGID GALVANIZED STEEL CONDUIT (BORED)

LEGEND

- FULL DEPTH PAVEMENT
- NMA HIKER/BIKER TRAIL
- MILLING & RESURFACING
- REMOVAL OF EXISTING PAVEMENT
- CEMENT CONCRETE SIDEWALK

0 20 40
SCALE IN FEET

L-6

U.S. DEPARTMENT OF TRANSPORTATION
FEDERAL HIGHWAY ADMINISTRATION
EASTERN FEDERAL LANDS HIGHWAY DIVISION
STERLING, VIRGINIA

ROCK CREEK & POTOMAC PARKWAY STA. 21+50 TO STA. 26+50 LIGHTING PLAN

...\sl06rock.dgn 8/14/2006 4:18:16 PM

NPS	REG	STATE	PROJECT	SHEET NO.	TOTAL SHEETS
821 41220	NC	DC	FRA-RICR 3(6, 20)(1)	90	139

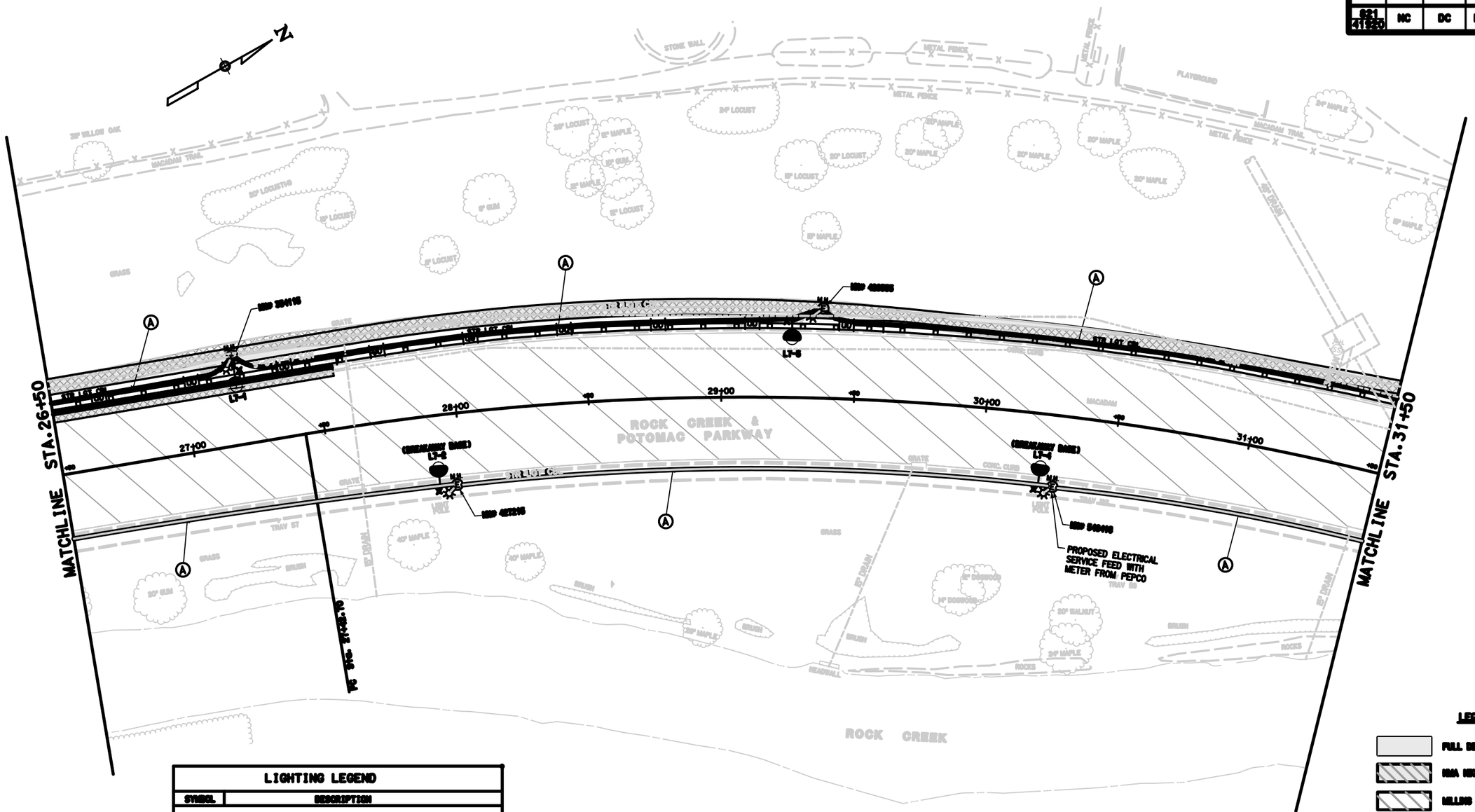

LIGHTING LEGEND

SYMBOL	DESCRIPTION
☼	EXISTING LIGHT POLE TO BE REMOVED
⊗	PROPOSED 60W MAGNETIC GLARE LIGHTING FIXTURE WITH 60WATT METAL HALIDE LAMPS
Ⓐ	PROPOSED ELECTRICAL MANHOLE
✖	PROPOSED GROUND ROD
	PROPOSED 30-FOOT STEEL CORNHEAD LIGHTING FIXTURE WITH 400WATT METAL HALIDE LAMPS
JB	PROPOSED JUNCTION BOX
Ⓐ	PROPOSED 2-INCH PVC CONDUIT SCHEDULE 40 WITH 4#4 AWG CONDUCTOR WIRES AND 1#6 GROUND
Ⓔ	EXISTING ELECTRICAL MANHOLE TO REMAIN
Ⓑ	PROPOSED 2-INCH PVC CONDUIT SCHEDULE 40 WITH 4#4 AWG CONDUCTOR WIRES AND 1#6 GROUND WIRE 4-INCH RIGID GALVANIZED STEEL CONDUIT (GRAVED)

LEGEND

- FULL DEPTH PAVEMENT
- NPS HIKER/BIKER TRAIL
- MILLING & RESURFACING
- REMOVAL OF EXISTING PAVEMENT
- CEMENT CONCRETE SIDEWALK

0 20 40
SCALE IN FEET

U.S. DEPARTMENT OF TRANSPORTATION
FEDERAL HIGHWAY ADMINISTRATION
EASTERN FEDERAL LANDS HIGHWAY DIVISION
STERLING, VIRGINIA

ROCK CREEK & POTOMAC PARKWAY
STA. 26+50 TO STA. 31+50
LIGHTING PLAN

...\sl07rock.dgn 8/14/2006 4:19:04 PM

NPS	REG	STATE	PROJECT	SHEET NO.	TOTAL SHEETS
621 41920	NC	DC	FRA-RICR 3(6, 20(1)	91	139

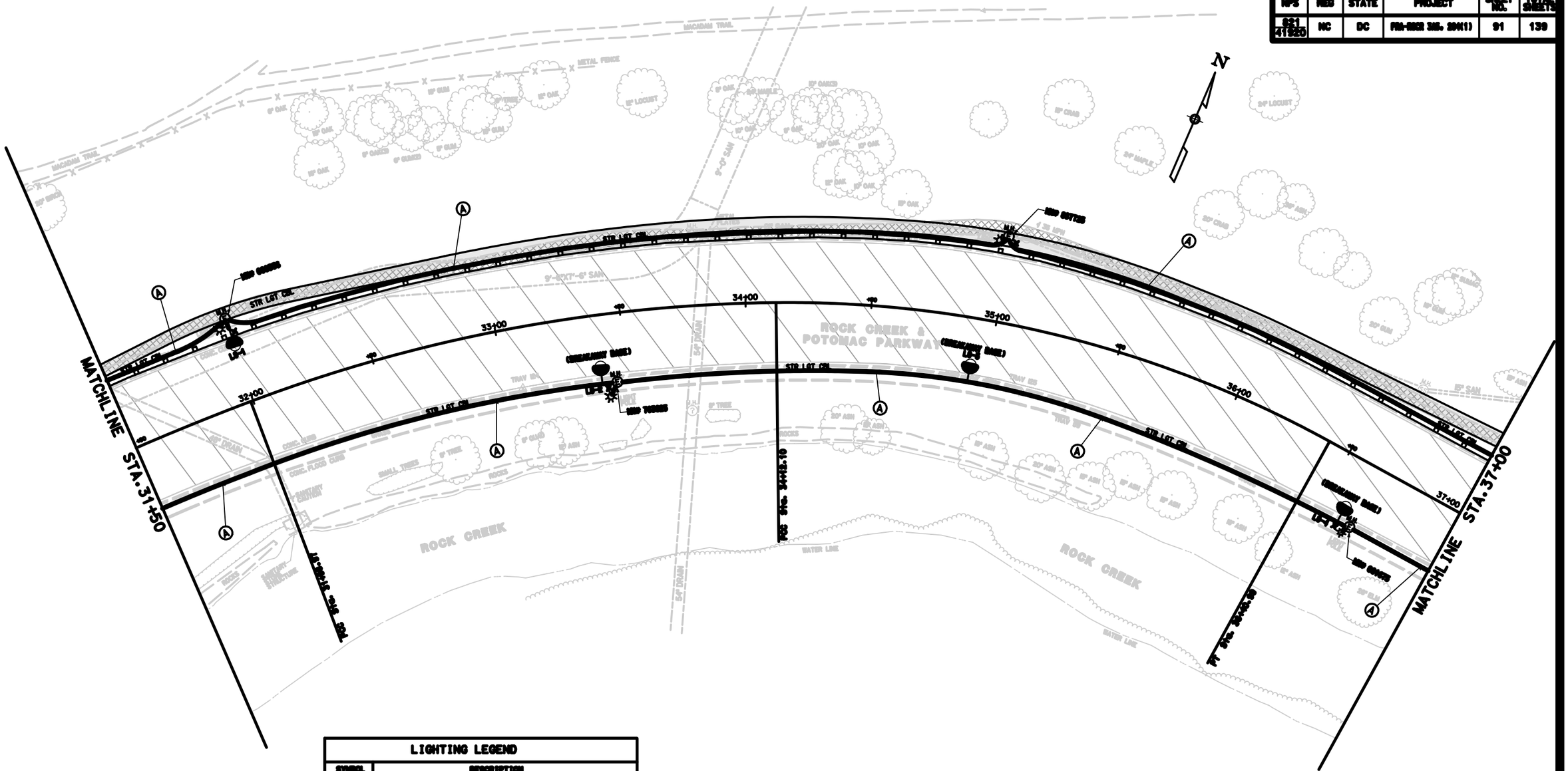

LIGHTING LEGEND

SYMBOL	DESCRIPTION
☼	EXISTING LIGHT POLE TO BE REMOVED
⊗	PROPOSED 100W WASHINGTON GLOBE LIGHTING FIXTURE WITH 100WATT METAL HALIDE LAMPS
Ⓐ	PROPOSED ELECTRICAL HANDHOLE
×	PROPOSED GROUND ROD
🌳	PROPOSED 30-FOOT STEEL CORNWALL LIGHTING FIXTURE WITH 400WATT METAL HALIDE LAMPS
JB	PROPOSED JUNCTION BOX
Ⓐ	PROPOSED 2-INCH PVC CONDUIT SCHEDULE 40 WITH 4-#4 AWG CONDUCTOR WIRES AND 1-#8 GROUND
Ⓔ	EXISTING ELECTRICAL HANDHOLE TO REMAIN
Ⓑ	PROPOSED 2-INCH PVC CONDUIT SCHEDULE 40 WITH 4-#4 AWG CONDUCTOR WIRES AND 1-#8 GROUND WIRE 4-INCH RIGID GALVANIZED STEEL CONDUIT BURIED

LEGEND

- FULL DEPTH PAVEMENT
- NMA HIKER/BIKER TRAIL
- MILLING & RESURFACING
- REMOVAL OF EXISTING PAVEMENT
- CEMENT CONCRETE SIDEWALK

0 20 40
SCALE IN FEET

L-8

U.S. DEPARTMENT OF TRANSPORTATION
FEDERAL HIGHWAY ADMINISTRATION
EASTERN FEDERAL LANDS HIGHWAY DIVISION
STERLING, VIRGINIA

ROCK CREEK & POTOMAC PARKWAY STA. 31+50 TO STA. 37+00 LIGHTING PLAN

...\sl08rock.dgn 8/14/2006 4:19:43 PM

NPS	REG	STATE	PROJECT	SHEET NO.	TOTAL SHEETS
621 41920	NC	DC	RM-RCR 36, 20K(1)	92	139

LIGHTING LEGEND

SYMBOL	DESCRIPTION
	EXISTING LIGHT POLE TO BE REMOVED
	PROPOSED 400W WASHINGTON GLOBE LIGHTING FIXTURE WITH 250WATT METAL HALIDE LAMPS
	PROPOSED ELECTRICAL MANHOLE
	PROPOSED GROUND ROD
	PROPOSED 30-FOOT STEEL CORRUGATED LIGHTING FIXTURE WITH 400WATT METAL HALIDE LAMPS
	PROPOSED JUNCTION BOX
A	PROPOSED 2-INCH PVC CONDUIT (SCHEDULE 40) WITH 2#4 AWG CONDUCTOR WIRES AND #6 GROUND
E	EXISTING ELECTRICAL MANHOLE TO REMAIN
B	PROPOSED 2-INCH PVC CONDUIT (SCHEDULE 40) WITH 2#4 AWG CONDUCTOR WIRES AND #6 GROUND WIRE 4-INCH RIGID GALVANIZED STEEL CONDUIT (BORED)
C	PROPOSED 2-INCH PVC CONDUIT (SCHEDULE 40) WITH 2#4 AWG CONDUCTOR WIRES AND #6 GROUND WIRE 4-INCH RIGID GALVANIZED STEEL CONDUIT (TRENCHED)

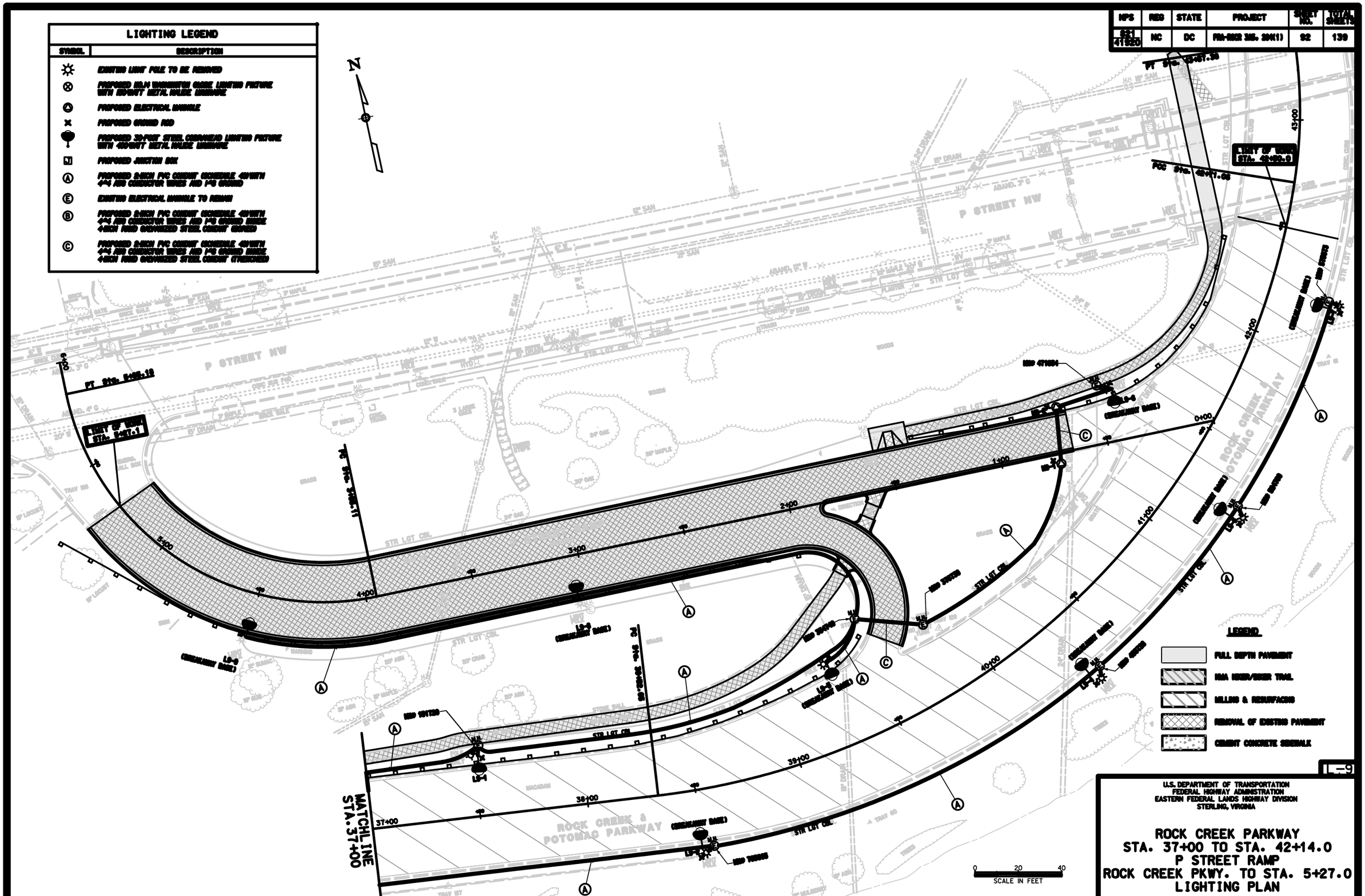

U.S. DEPARTMENT OF TRANSPORTATION
FEDERAL HIGHWAY ADMINISTRATION
EASTERN FEDERAL LANDS HIGHWAY DIVISION
STERLING, VIRGINIA

ROCK CREEK PARKWAY
STA. 37+00 TO STA. 42+14.0
P STREET RAMP
ROCK CREEK PKWY. TO STA. 5+27.0
LIGHTING PLAN

L-9

...\sl09rock.dgn 8/14/2006 4:20:28 PM

REVISION									
	DESCRIPTION	DATE	COR.	CHK.	APP.	APP.	APP.	APP.	APP.
A	REPLACE TRAFFIC SIGNAL CONTROLLER	7/21/83							
B	INSTALL LOOP DETECTOR	11/ 3/83							
C	REPLACE LOOP DETECTOR								

NPS	REG	STATE	PROJECT	SHEET NO.	TOTAL SHEETS
821 / 41920	NC	DC	PRA-ROCR 3A5.204(1)	93	139

LEGEND:

- TC = EXISTING TYPE 170 TRAFFIC SIGNAL CONTROLLER WITH MODEL 336S CABINET
- TS = EXISTING TRAFFIC SIGNAL POLE
- L = EXISTING STREET LIGHT POLE WITH LUMINAIRE
- TS/L = EXISTING POLE WITH TRAFFIC SIGNAL AND STREETLIGHT
- = EXISTING 3 SECTION TRAFFIC SIGNAL HEAD CONVENTIONAL (ALL LENSES 12")
- = EXISTING 5 SECTION TRAFFIC SIGNAL HEAD CONVENTIONAL (ALL LENSES 12")
- = EXISTING 2 SECTION PEDESTRIAN SIGNAL HEAD (ALL LENSES 12")
- = EXISTING SIGN
- = EXISTING PEDESTRIAN PUSH BUTON
- = EXISTING MICROWAVE VEHICLE DETECTOR
- = EXISTING STORM CATCH BASIN
- = EXISTING SANITARY SEWER MANHOLE
- = EXISTING WATER MANHOLE
- = EXISTING PEPCO ELECTRICAL MANHOLE
- = PROPOSED HANDBOX
- = EXISTING ELECTRICAL CONDUIT
- = PROPOSED ELECTRICAL PVC CONDUIT
- = EXISTING WHEELCHAIR RAMP
- =PROPOSED WHEELCHAIR RAMP
- = EXISTING REVERSIBLE ONE-WAY SIGN

GENERAL NOTES:

1. ALL WORK RELATING TO THE INSTALLATION OF TRAFFIC SIGNALS SHALL COMPLY WITH APPROPRIATE PROVISIONS OF D.C. DRAWING NO. S-2100, DDOT STANDARD SPECIFICATIONS, AND CONTRACT SPECIAL PROVISIONS.
2. THE CONTRACTOR SHALL SUBMIT TO THE DDOT CATALOG CUTS OF ALL EQUIPMENT AND MATERIALS TO BE FURNISHED AND INSTALLED. WRITTEN APPROVAL FROM DDOT SHALL BE SECURED PRIOR TO PROCUREMENT.
3. THE LOCATION OF PROPOSED EQUIPMENT SHOWN IS APPROXIMATE. THE LOCATION OF ALL PROPOSED EQUIPMENT AND MATERIAL SHALL BE FIELD LOCATED, VERIFIED, AND APPROVED BY THE ENGINEER PRIOR TO INSTALLATION.
4. THE CONTRACTOR SHALL FURNISH AND INSTALL ALL PROPOSED CONDUITS, HANDBOX, AND CABLE.

INSTALLATION NOTES:

1. INSTALL 6' X 60' LOOP DETECTOR (2-4-2 TURNS)

REMOVAL NOTES:

1. ABANDON EXISTING LOOP DETECTOR IN PLACE. REMOVE THE EXISTING DETECTOR LEAD-IN CABLE.

CABLE NOTES:

1. DDOT PERSONNEL WILL MAKE ALL ELECTRICAL CONNECTIONS AND DISCONNECTIONS INSIDE THE CONTROLLER CABINET.
2. THE CONTRACTOR SHALL FURNISH AND INSTALL NEW, UNSPLICED 4C 18 AWG SHIELDED, STRANDED CABLE FROM THE HANDBOX TO THE PROPOSED LOOP DETECTOR.
3. THE LOOP WIRE SHALL BE 1C 14 AWG.

CONDUIT NOTES:

1. 1-4" PVC CONDUIT SHALL BE INSTALLED BETWEEN THE PROPOSED HANDBOX AND THE EXISTING US MANHOLE.

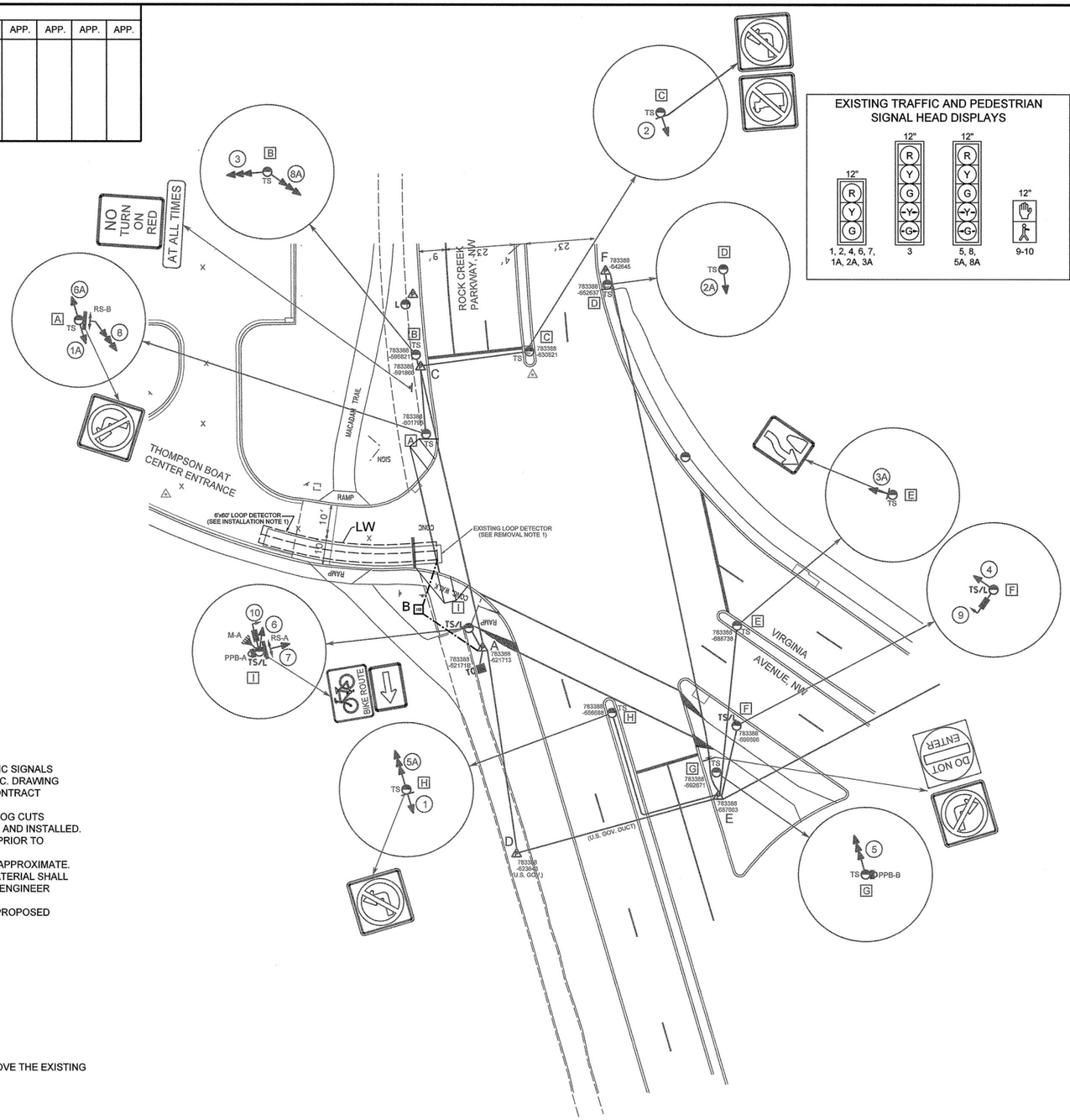

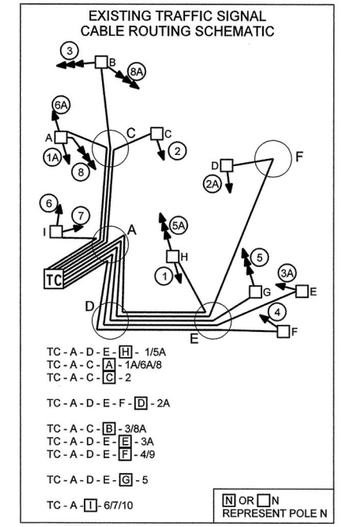

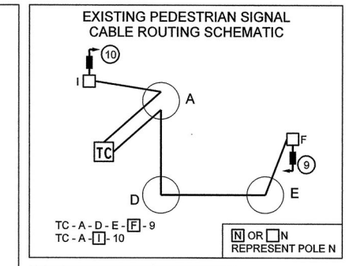

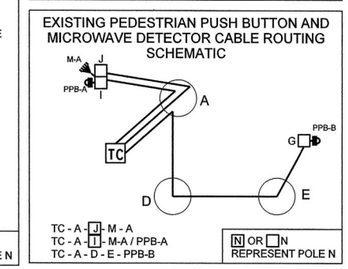

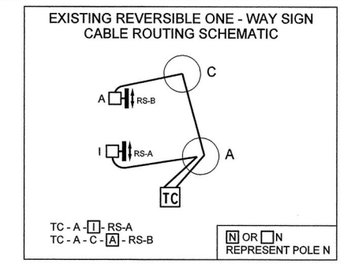

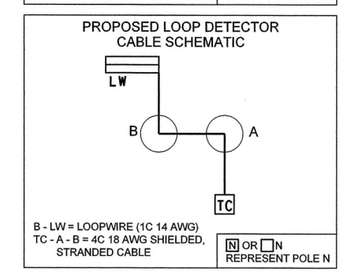

N

S.L.F. NO.

APPROVED BY DATE

DISTRICT OF COLUMBIA
DEPARTMENT OF TRANSPORTATION
TRAFFIC SERVICES ADMINISTRATION

ROCK CREEK PARKWAY
AND VIRGINIA AVENUE, NW
TRAFFIC SIGNAL MODIFICATION

RECOMMENDED Johnny Amaglobeli 6/24/04
CHIEF, TRAFFIC SIGNAL DESIGN BRANCH DATE
CHIEF, TRAFFIC SIGNAL OPERATIONS BRANCH DATE
CHIEF, TRAFFIC SIGNAL CONSTRUCTION BRANCH DATE
CHIEF, TRAFFIC SIGNAL MAINTENANCE BRANCH DATE
APPROVED William W. McGuirk 6/24/04
CHIEF, TRAFFIC SIGNAL SYSTEM DIVISION DATE

FIELD CHECKED BY	ME
DESIGNED BY	ME
DRAWN BY	DB
DATE	4/13/04
SCALE	1" = 20'
SHEET / OF	1 / 3
DRAWING NO.	S-1547-C

H:/PROJECTS/TRANSP/0212102 ROCK CREEK STUDY- DESIGN\BASE FILES FROM PEI\ds91rock.dgn

REVISION								
DESCRIPTION	DATE	COR.	CHK.	APP.	APP.	APP.	APP.	APP.

NPS	REG	STATE	PROJECT	SHEET NO.	TOTAL SHEETS
821 / 41920	NC	DC	PRA-ROCR 3A5.204(1)	94	139

LEGEND:

- TS = EXISTING TRAFFIC SIGNAL POLE
- TS/L = EXISTING POLE WITH TRAFFIC SIGNAL AND STREETLIGHT
- L = EXISTING STREET LIGHT POLE WITH LUMINAIRE
- G = GAS
- W = WATER
- SAN = SANITARY
- = EXISTING SIGN
- = EXISTING STORM CATCH BASIN
- = EXISTING PEPCO ELECTRICAL MANHOLE
- = EXISTING WHEELCHAIR RAMP

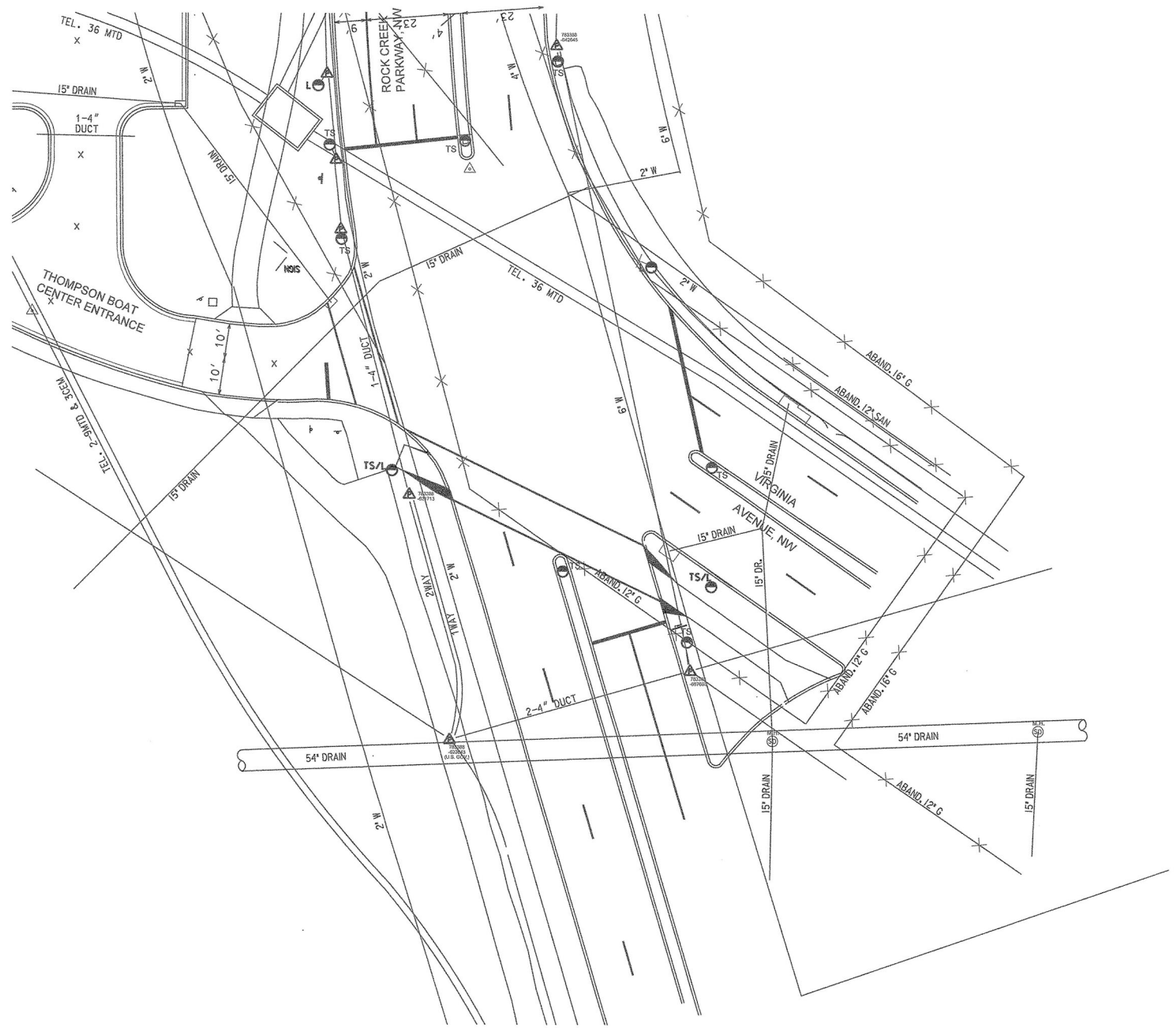

N

DISTRICT OF COLUMBIA DEPARTMENT OF TRANSPORTATION TRAFFIC SERVICES ADMINISTRATION	FIELD CHECKED BY: ME
ROCK CREEK PARKWAY AND VIRGINIA AVENUE, NW UTILITY PLAN FOR SIGNAL DESIGN	DESIGNED BY: ME DRAWN BY: DB
RECOMMENDED: Johnny Amighow — CHIEF, TRAFFIC SIGNAL DESIGN BRANCH — DATE 6/24/02	DATE: 4/13/04
CHIEF, TRAFFIC SIGNAL OPERATIONS BRANCH — DATE	SCALE: 1" = 20'
CHIEF, TRAFFIC SIGNAL CONSTRUCTION BRANCH — DATE	SHEET 2 OF 3
CHIEF, TRAFFIC SIGNAL MAINTENANCE BRANCH — DATE	DRAWING NO.: S-1547-C
APPROVED: William W. McGuinn — CHIEF, TRAFFIC SIGNAL SYSTEM DIVISION — DATE 6/24/04	

S.L.F. NO.

APPROVED BY — DATE

H:/PROJECTS/TRANSP/02212/02 ROCK CREEK STUDY - DESIGN/BASE FILES FROM PEIN/02/rock.dgn

NPS	REG	STATE	PROJECT	SHEET NO.	TOTAL SHEETS
621 / 41920	NC	DC	PRA-ROCR 345, 204(1)	95	139

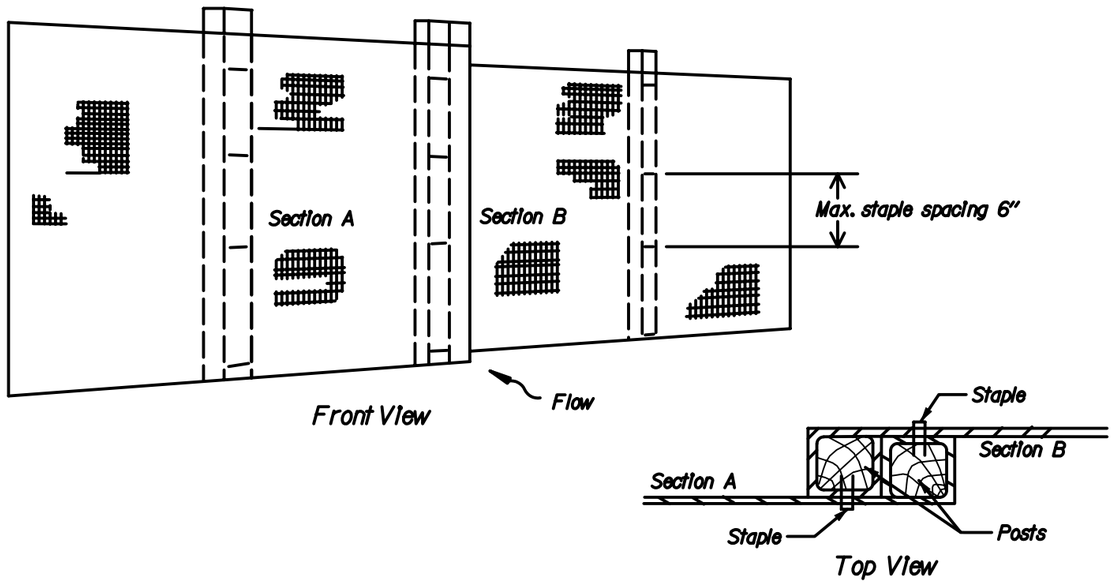

JOINING TWO ADJACENT SILT FENCE SECTIONS

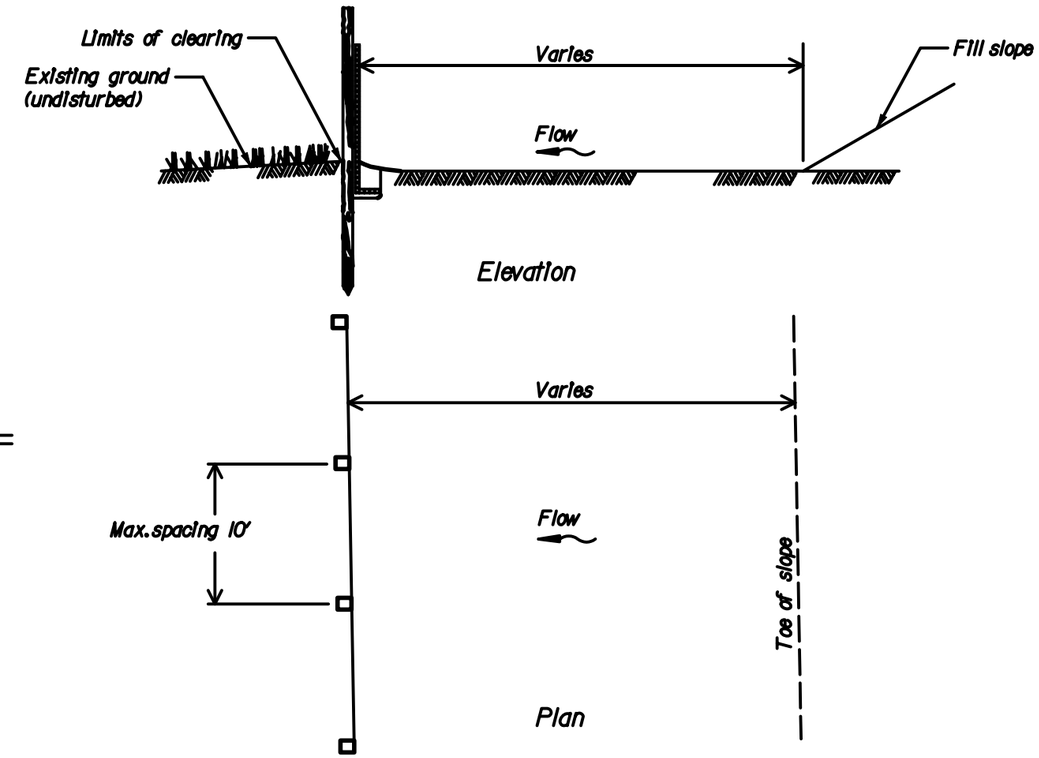

SILT FENCE INSTALLATION AT TOE OF FILL

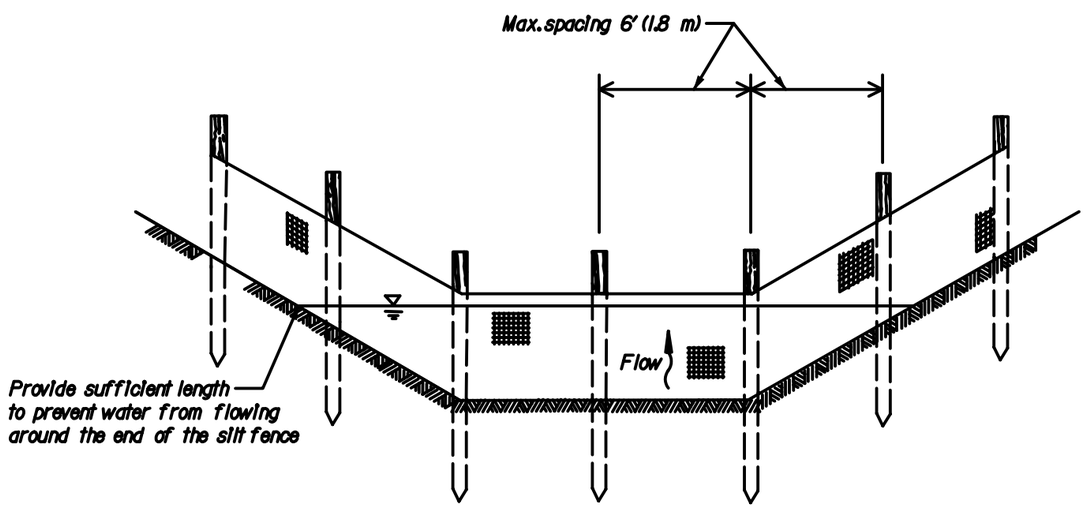

SILT FENCE INSTALLATION IN A DRAINAGE DITCH

Note: Use drainage ditch installation for low flow conditions only when specified on Erosion Control Plan.

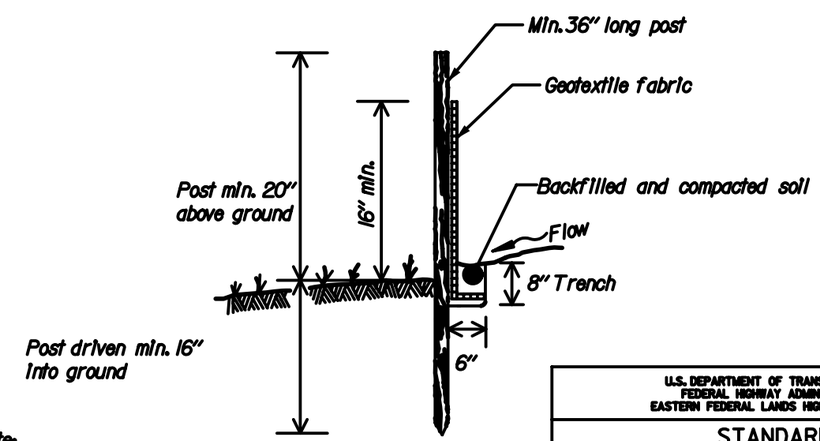

(not to scale)

Note:
Alternate pre-assembled silt fence options will be allowed as long as specified minimums are satisfied. Follow manufacturer's information for installation procedures.

U.S. DEPARTMENT OF TRANSPORTATION
FEDERAL HIGHWAY ADMINISTRATION
EASTERN FEDERAL LANDS HIGHWAY DIVISION

STANDARD

SILT FENCE

STANDARD APPROVED FOR USE XX/XX

REVISED: XX/XX

STANDARD 157-1

...\de157-1.dgn 8/15/2006 9:56:58 AM

NPS	REG	STATE	PROJECT	SHEET NO.	TOTAL SHEETS
821 / 41920	NC	DC	PRA-ROCR 345, 204(1)	96	139

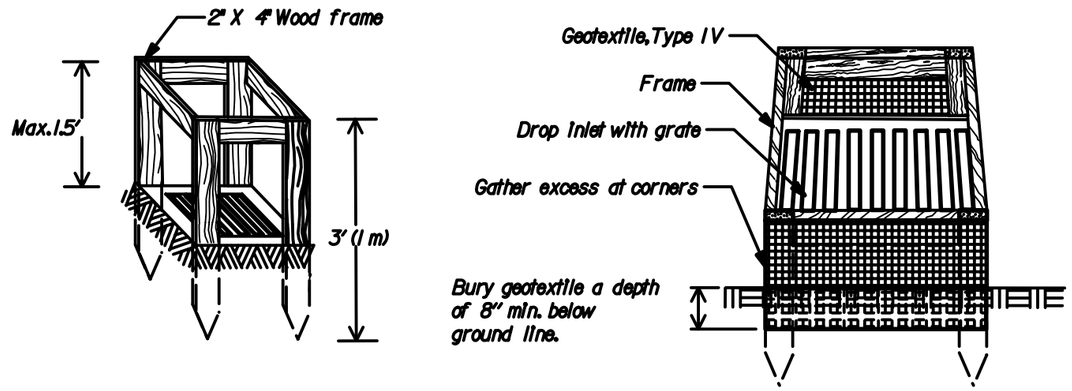

SILT FENCE DROP INLET PROTECTION (TYPE A)

Note: Use Type A inlet protection in sump locations only.

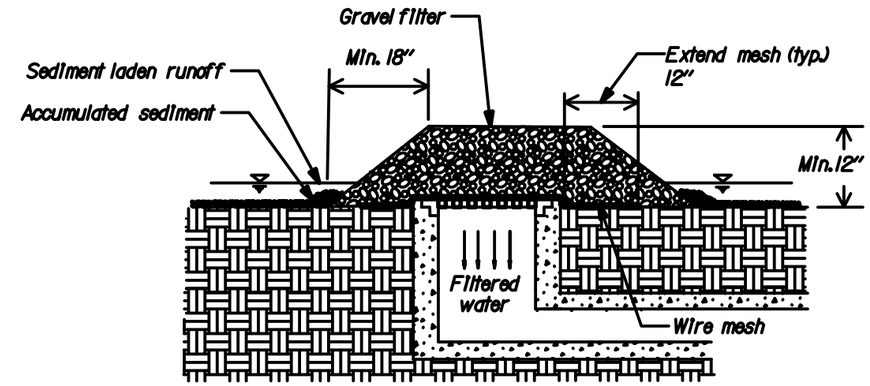

GRAVEL AND WIRE MESH DROP INLET PROTECTION (TYPE B)

Note: Use Type B inlet protection only in sump locations where heavy concentrated flows are not expected. Do not use where ponding around the structure might cause inconvenience or damage.

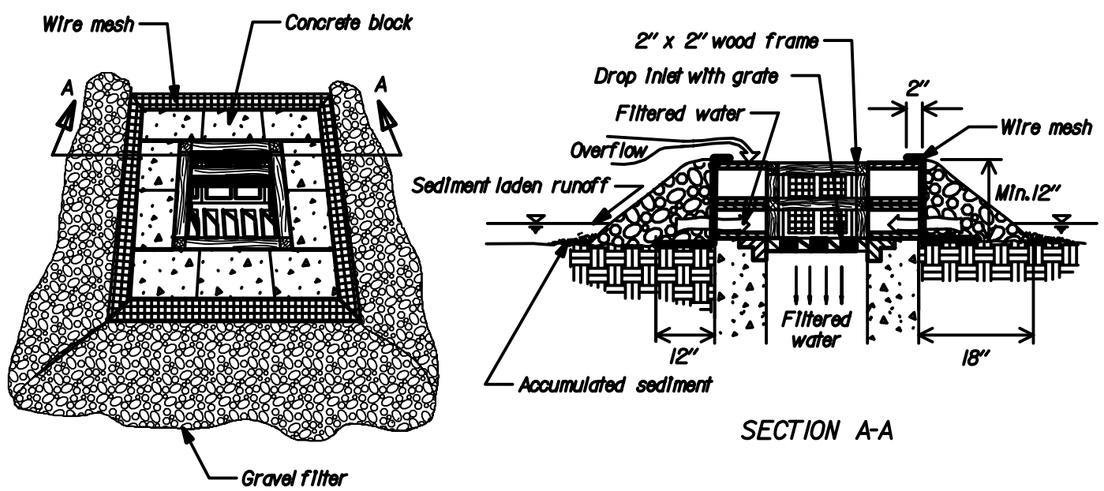

SECTION A-A

BLOCK AND GRAVEL DROP INLET PROTECTION (TYPE C)

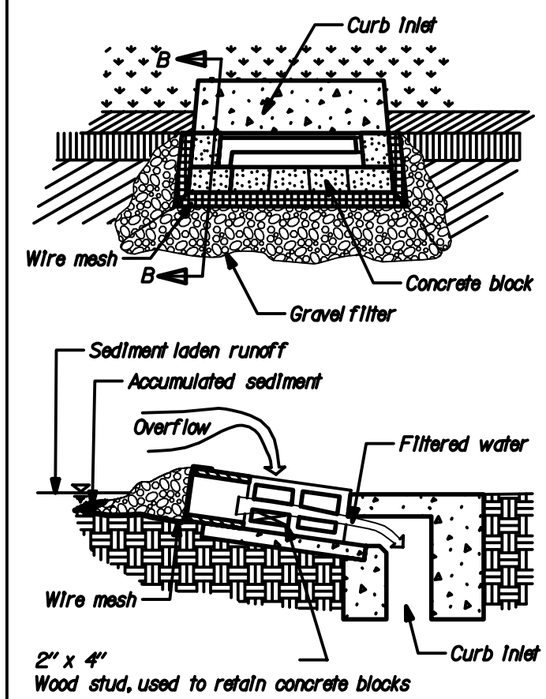

SECTION B-B

CURB INLET PROTECTION, BLOCK AND GRAVEL (TYPE D)

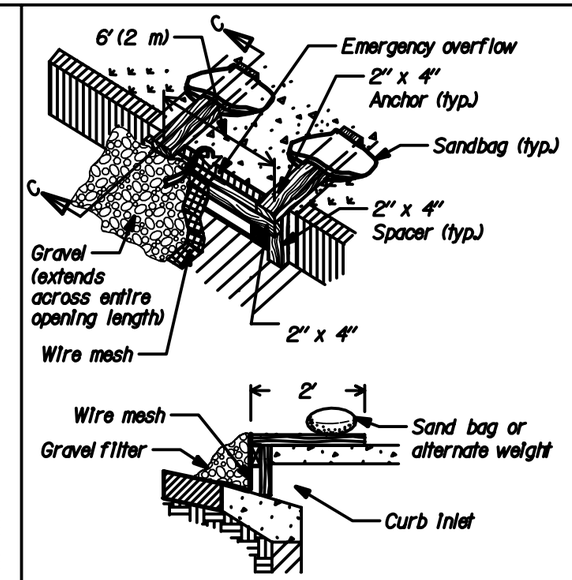

SECTION C-C

CURB INLET PROTECTION, WOODEN WEIR (TYPE E)

General Notes:

1. For gravel filters use 2" - 3" diameter coarse aggregate.
2. Use wire mesh with ½" x ½" openings.

U.S. DEPARTMENT OF TRANSPORTATION
FEDERAL HIGHWAY ADMINISTRATION
EASTERN FEDERAL LANDS HIGHWAY DIVISION

STANDARD

TEMPORARY INLET PROTECTION

(not to scale)

STANDARD APPROVED FOR USE XX/XX

REVISED: XX/XX

STANDARD 157-2

...\de157-2.dgn 8/15/2006 9:57:42 AM

NPS	REG	STATE	PROJECT	SHEET NO.	TOTAL SHEETS
821 / 41920	NC	DC	PRA-ROCR 345, 204(1)	97	139

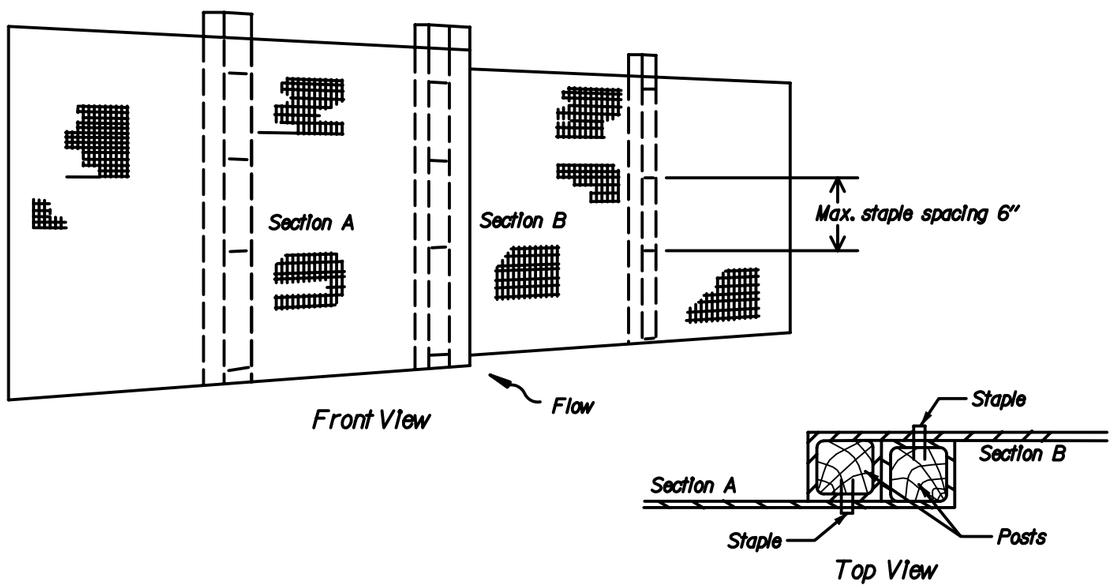

JOINING TWO ADJACENT SILT FENCE SECTIONS

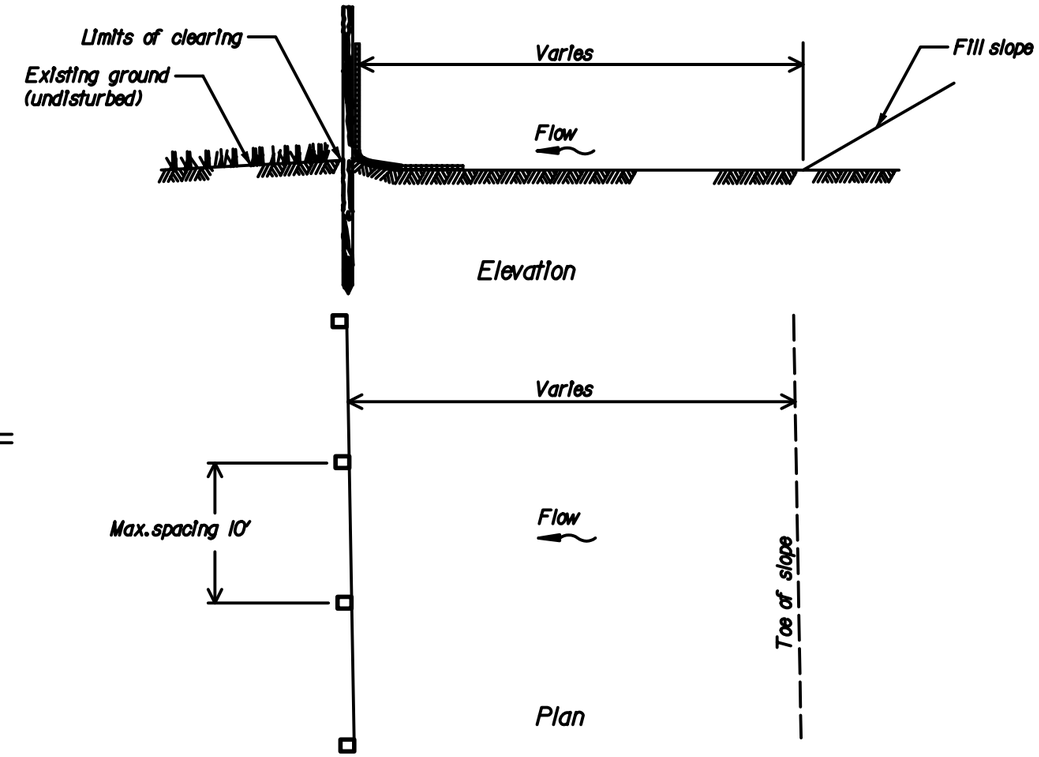

SILT FENCE INSTALLATION AT TOE OF FILL

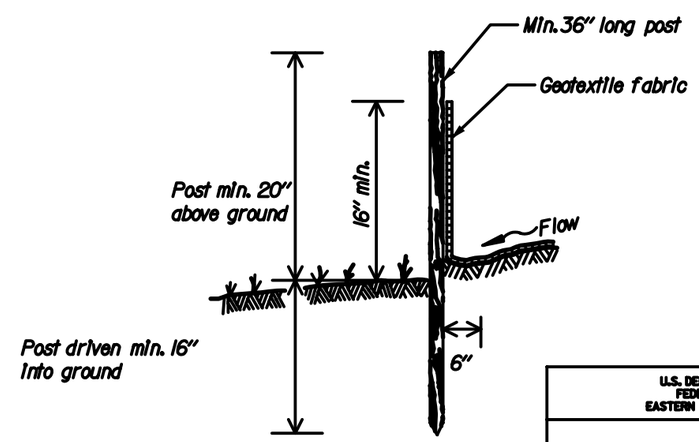

(not to scale)

Notes:

1. Unless otherwise shown, dimensions are in inches.

2. Alternate pre-assembled silt fence options will be allowed as long as specified minimums are satisfied. Follow manufacturer's information for installation procedures.

3. This detail is to be used for silt fence placed within the dripline of trees. Otherwise refer to Detail 157-1.

U.S. DEPARTMENT OF TRANSPORTATION
FEDERAL HIGHWAY ADMINISTRATION
EASTERN FEDERAL LANDS HIGHWAY DIVISION

DETAIL

SILT FENCE
(PLACED WITHIN TREE DRIPLINE)

STANDARD APPROVED FOR USE XX/XX	DETAIL
REVISED: XX/XX	E157-A

NPS	REG	STATE	PROJECT	SHEET NO.	TOTAL SHEETS
821 41920	NC	DC	FRA-RIER 3(6, 20(11)	98	139

NOTES:

1. Use AASHTO M43, size No. 3 aggregate.
2. Place Geotextile, Type IIA, over the entire area prior to placing stone.
3. Maintain the entrance in a condition which will prevent tracking of flowing of sediments onto public right-of-way. Provide additional stone as required to repair the entrance. Clean out sediment control devices when they are half full. Imediately remove all sediment spilled, dropped, washed or tracked onto public right-of-way.
4. Clean all wheels to remove sediment prior to entering onto public right-of-way. When directed by the CO, wash the wheels with water.
5. Provide stabilized construction entrances at the locations shown in the plans or where directed by the CO.
6. The location and number of stabilized construction entrances will be approved in advance by the CO.

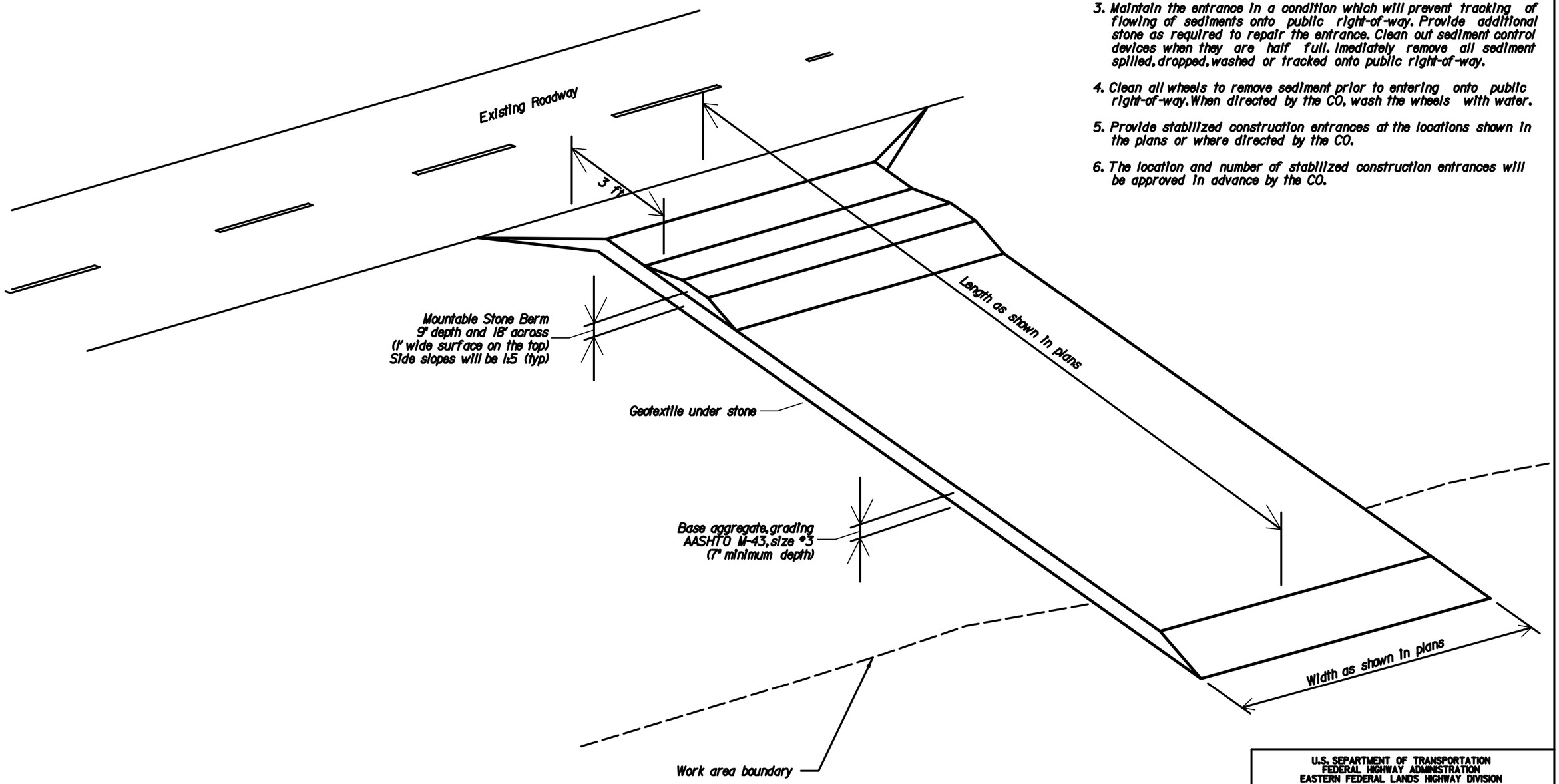

(No Scale)

U.S. DEPARTMENT OF TRANSPORTATION
FEDERAL HIGHWAY ADMINISTRATION
EASTERN FEDERAL LANDS HIGHWAY DIVISION

DETAIL

TEMPORARY CONSTRUCTION ENTRANCE

STANDARD APPROVED FOR USE XX/XX

REVISED: XX/XX

DETAIL E157-B

NPS	REG	STATE	PROJECT	SHEET NO.	TOTAL SHEETS
821 / 41920	NC	DC	PRA-ROCR 345, 204(1)	99	139

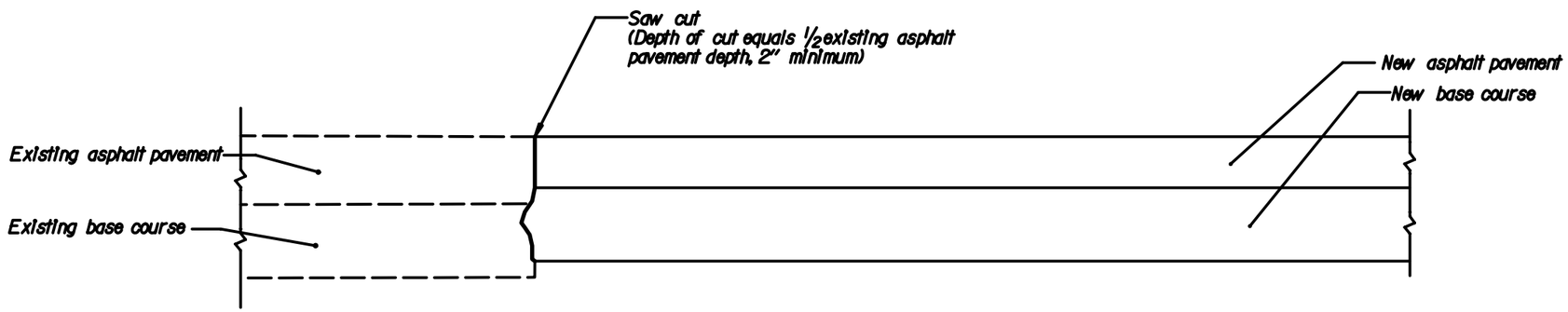

NEW PAVEMENT

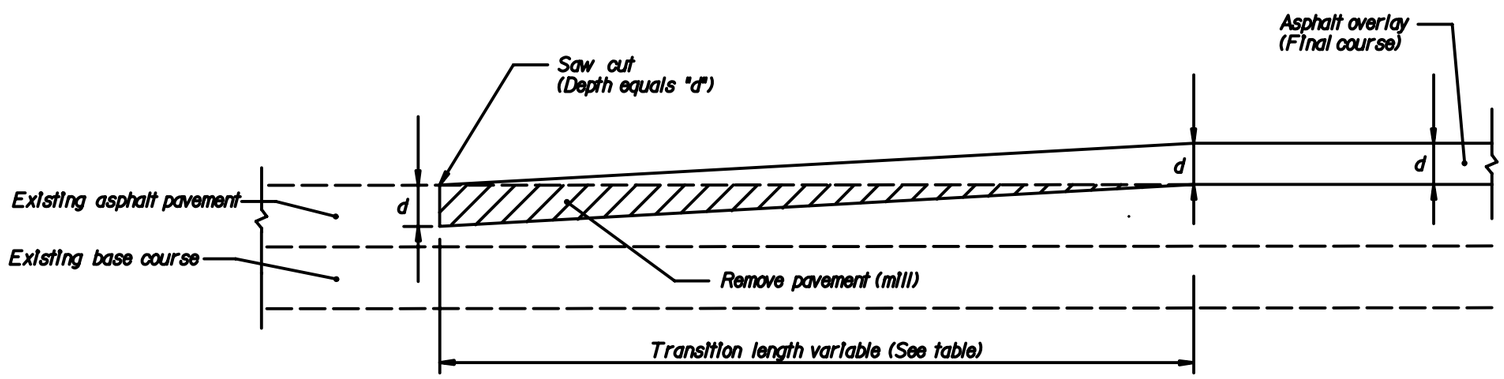

OVERLAY

d - Inches	Transition Length - Feet
1	20
1.5	30
2	40
2.5	50
3	60

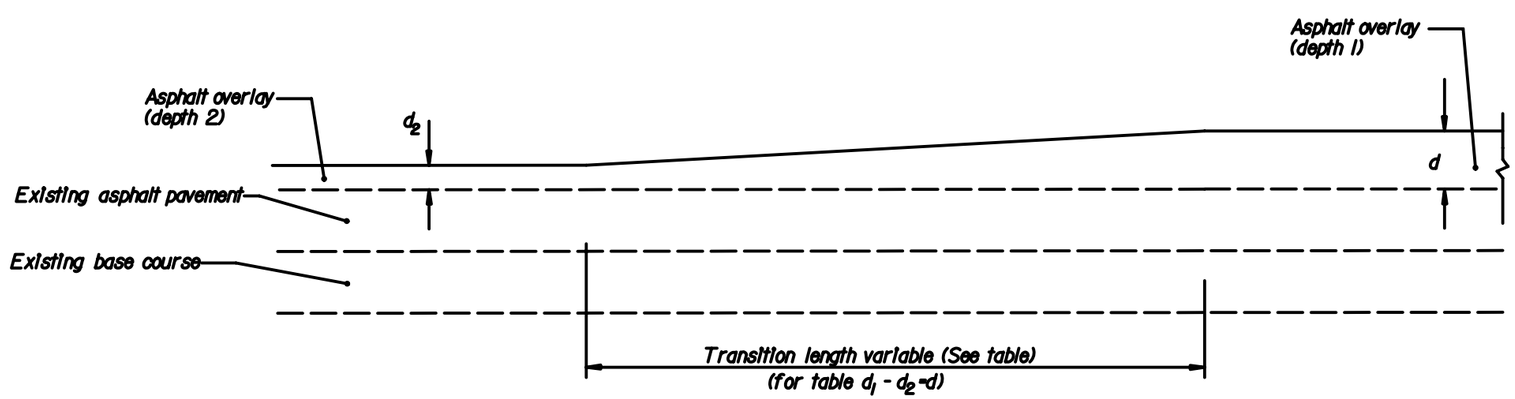

OVERLAY - DEPTH TRANSITIONS

NOT TO SCALE

U.S. DEPARTMENT OF TRANSPORTATION
FEDERAL HIGHWAY ADMINISTRATION
EASTERN FEDERAL LANDS HIGHWAY DIVISION

DETAIL
PAVEMENT
TRANSITIONS

DETAIL APPROVED FOR USE XX/XX

REVISED: XX/XX

DETAIL
E401-1

...\deE401-1.dgn 8/15/2006 10:13:20 AM

NPS	REG	STATE	PROJECT	SHEET NO.	TOTAL SHEETS
821 41920	NC	DC	PRA-ROCR 3A5, 204(1)	100	139

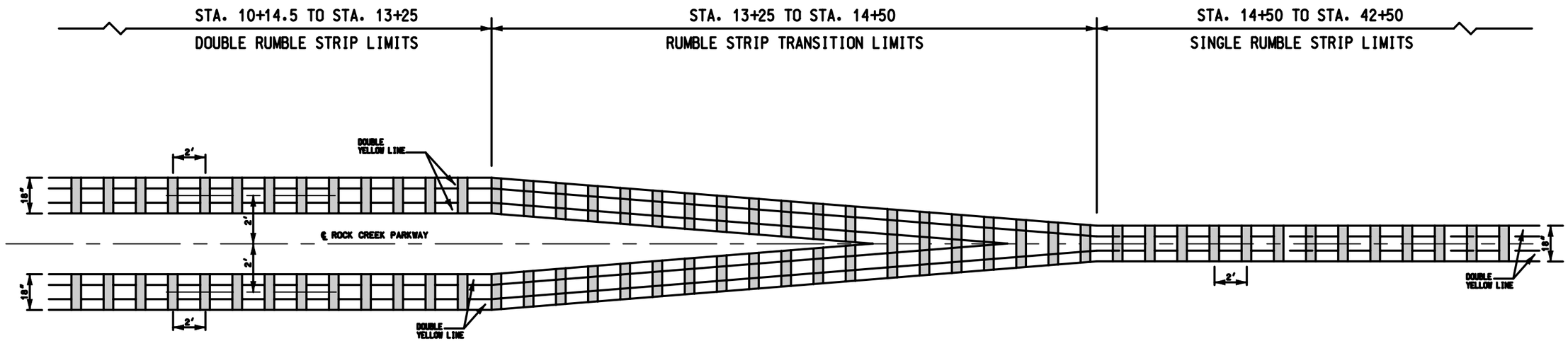

CENTERLINE RUMBLE STRIP

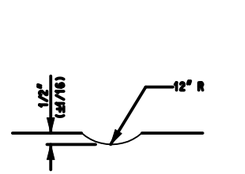

SECTION A-A

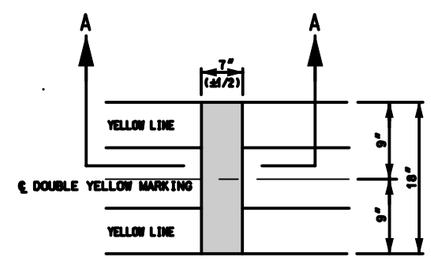

PLAN VIEW

NOTES

1. RUMBLE STRIPS SHALL BE INSTALLED ALONG THE LENGTH OF THE DOUBLE YELLOW PAVEMENT MARKINGS AS SHOWN.
2. RUMBLE STRIPS SHALL BE INSTALLED ALONG THE LENGTH OF ROCK CREEK AND POTOMAC PARKWAY FROM STA. 10+14.5 TO STA. 42+50.

NO SCALE

U.S. DEPARTMENT OF TRANSPORTATION
FEDERAL HIGHWAY ADMINISTRATION
EASTERN FEDERAL LANDS HIGHWAY DIVISION

DETAIL

RUMBLE STRIPS

STANDARD APPROVED FOR USE XX/XX
REVISED: XX/XX

DETAIL
E401-A

NPS	REG	STATE	PROJECT	SHEET NO.	TOTAL SHEETS
821 41920	NC	DC	PRA-ROCR 3A5, 204(1)	101	139

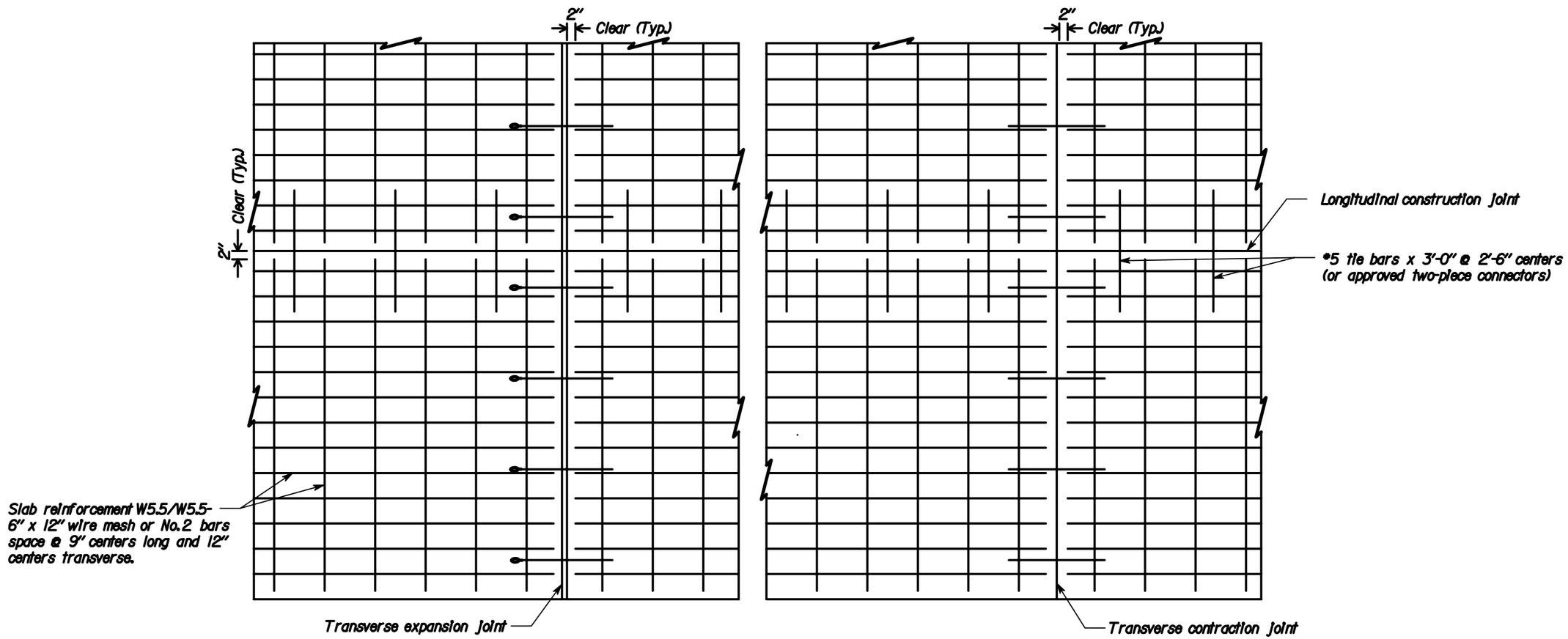

PLAN VIEW

Notes:

1. Lap longitudinal reinforcement not less than 13-inches.
2. Lap transverse reinforcement not less than 9-inches.
3. Eliminate all longitudinal and transverse reinforcing steel, wire, or bars where plain portland cement concrete pavement or base is required.
4. Provide the same type of dowel assemblies and tie bars for joints in plain portland cement concrete pavement as shown for joints in reinforced pavment.
5. Space transverse expansion joints at a minimum of 300 feet.
6. Space transverse contraction joints for reinforced concrete pavement at not more than 40 foot intervals and for plain concrete pavement or base at not more than 20 foot intervals.
7. See Standard 501-2 for joint details and joint sealing details.

U.S. DEPARTMENT OF TRANSPORTATION
FEDERAL HIGHWAY ADMINISTRATION
EASTERN FEDERAL LANDS HIGHWAY DIVISION

STANDARD

STANDARD
PORTLAND CEMENT
CONCRETE PAVEMENT

STANDARD APPROVED FOR USE XX/XX

REVISED: XX/XX

STANDARD
501-1

NPS	REG	STATE	PROJECT	SHEET NO.	TOTAL SHEETS
821 41920	NC	DC	FRA-ROCR 345, 204(1)	102	139

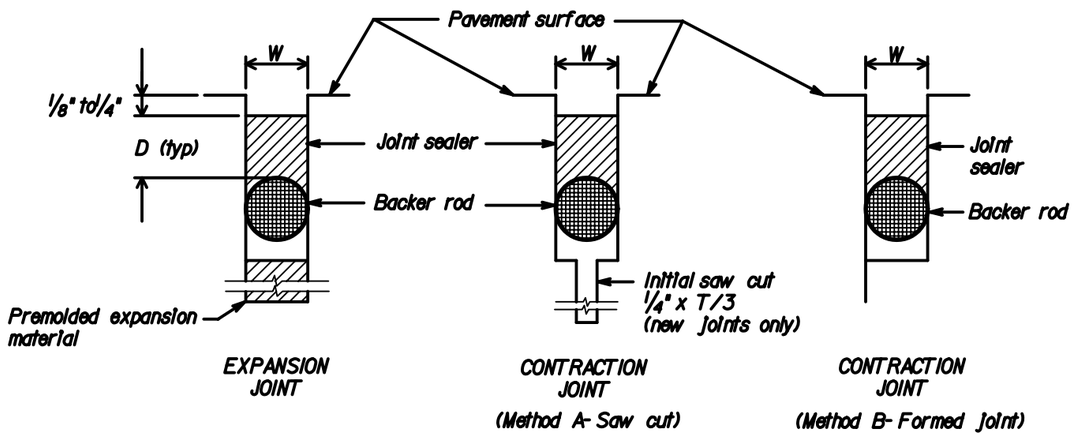

REINFORCED PORTLAND CEMENT CONCRETE PAVEMENT
JOINT SEALING DETAILS

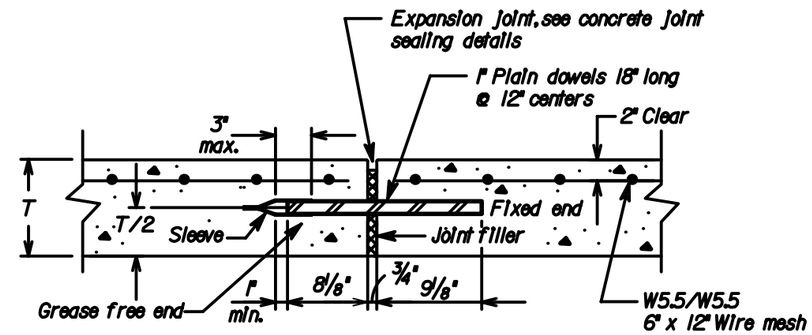

TRANSVERSE EXPANSION JOINT

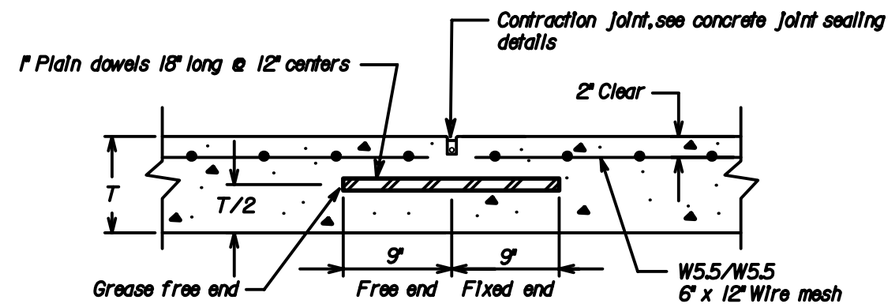

TRANSVERSE CONTRACTION JOINT

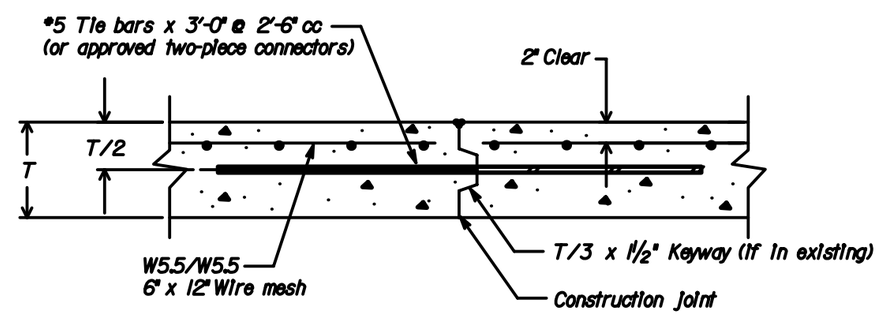

LONGITUDINAL CONSTRUCTION JOINT

REINFORCED PORTLAND CEMENT CONCRETE PAVEMENT
JOINT DETAILS

Notes:

1. Anchor tie bars and dowels into existing concrete pavement with epoxy resin adhesive.
2. Space expansion joints a minimum of 300 feet. Locate expansion joints at existing asphalt patches where possible.
3. W=3/4-inch unless field conditions require a larger opening
4. Maintain joint sealant shape factor of 1:1 except that when silicone sealant is used, the width to depth shape factor is 2:1.

U.S. DEPARTMENT OF TRANSPORTATION
FEDERAL HIGHWAY ADMINISTRATION
EASTERN FEDERAL LANDS HIGHWAY DIVISION

STANDARD
PORTLAND CEMENT CONCRETE PAVEMENT JOINTS

STANDARD APPROVED FOR USE XX/XX
REVISED: XX/XX

STANDARD
501-2

NPS	REG	STATE	PROJECT	SHEET NO.	TOTAL SHEETS
821 41920	NC	DC	FRA-ROCR 345, 204(1)	103	139

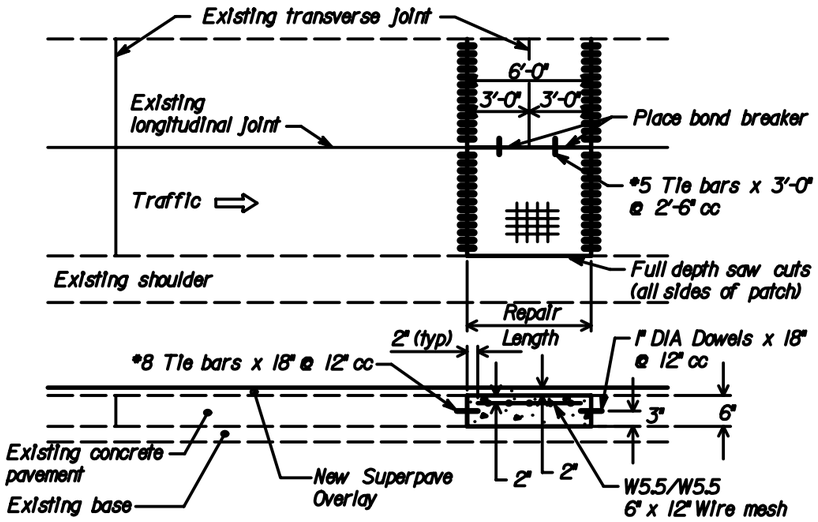

METHOD A

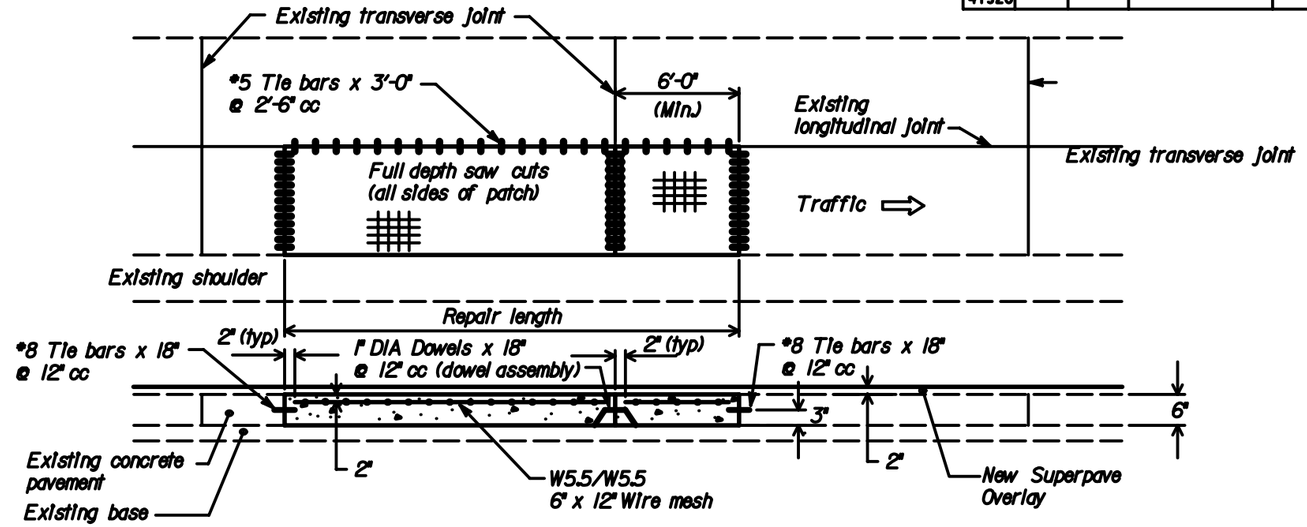

METHOD C

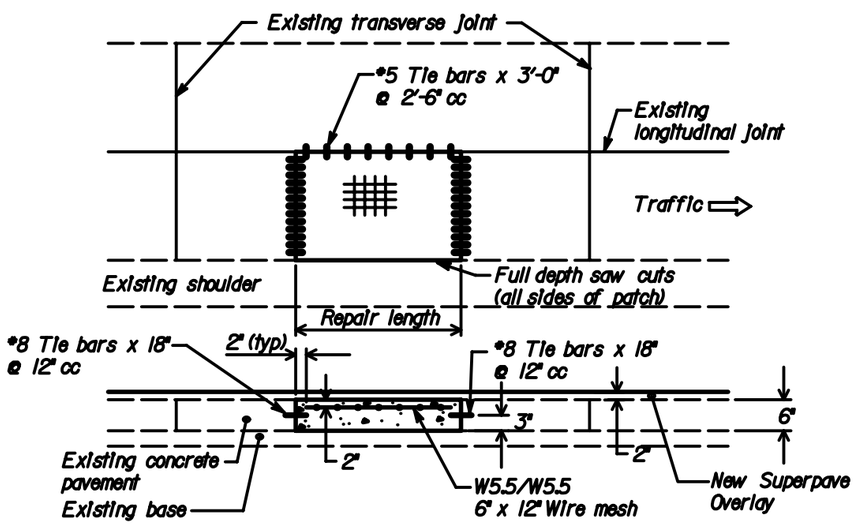

METHOD B

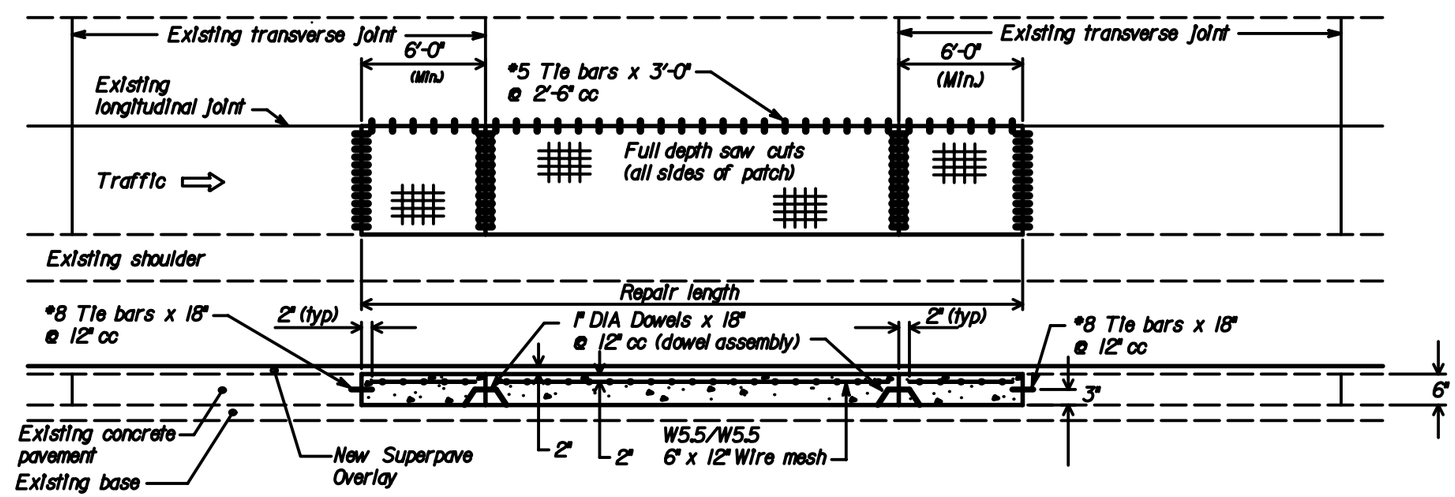

METHOD D

Notes:

1. Drill holes for the dowels and tie bars simultaneously to the required depth using frame mounted drills which will maintain the drills parallel to profile and longitudinal joint.
2. Provide epoxy coated tie bars and dowels.
3. See STD. 501-4 for pavement repair saw cuts for lift-out method.
4. Orient wire mesh so that the 12-inch dimension parallels the existing longitudinal joint.
5. An approved two-piece longitudinal tie device may be used in lieu of the No.5 tie bars.
6. Construction joints that use No.8 tie bars will not require sealing.
7. See STD.501-1 for reinforcement for full depth concrete pavement repair.

U.S. DEPARTMENT OF TRANSPORTATION
FEDERAL HIGHWAY ADMINISTRATION
EASTERN FEDERAL LANDS HIGHWAY DIVISION

DETAIL

CONCRETE PAVEMENT PATCHING

STANDARD APPROVED FOR USE XX/XX

REVISED: XX/XX

DETAIL 501-3A

NPS	REG	STATE	PROJECT	SHEET NO.	TOTAL SHEETS
821 41920	NC	DC	FRA-ROCR 3A5, 204(1)	104	139

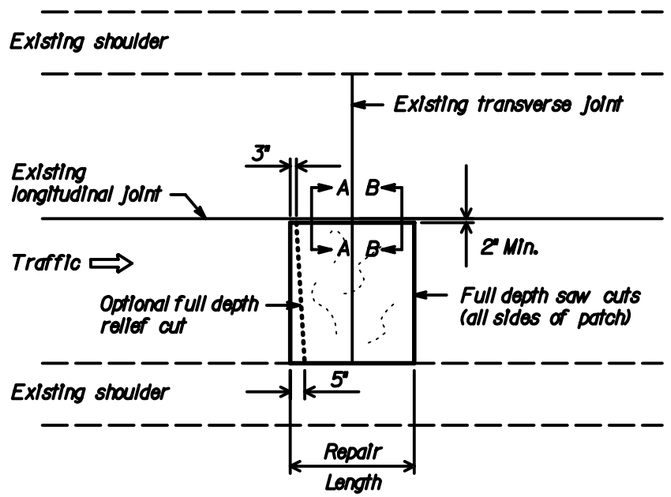

Notes:

1. Shoulder joints may be cut directly into the existing joint.
2. Make cuts running parallel and adjacent to a lane of traffic a minimum of 2-inches from the existing joint.
3. Saw cuts may be made into the shoulder.
4. If it is determined that the keyway is formed in the adjacent pavement section, the subsequent full depth saw cut may be made on the longitudinal joint.

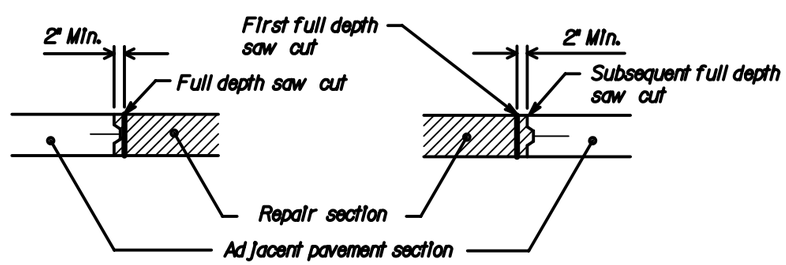

SECTION A-A
KEYWAY IN REPAIR SECTION

SECTION B-B
KEYWAY IN ADJACENT PAVEMENT SECTION

REINFORCED PORTLAND CEMENT CONCRETE PAVEMENT
SAW CUTS FOR LIFT OUT METHOD

U.S. DEPARTMENT OF TRANSPORTATION
FEDERAL HIGHWAY ADMINISTRATION
EASTERN FEDERAL LANDS HIGHWAY DIVISION

STANDARD

CONCRETE PAVEMENT
REMOVAL METHODS

STANDARD APPROVED FOR USE XX/XX
REVISED: XX/XX

STANDARD
501-4

NPS	REG	STATE	PROJECT	SHEET NO.	TOTAL SHEETS
821 / 41920	NC	DC	PRA-ROCR 345, 204(1)	105	139

CONCRETE ROUND PIPE CULVERT

FILL HEIGHT AND PIPE CLASS TABLE

PIPE SIZE DIAMETER INCHES	MINIMUM COVER INCHES	EMBANKMENT CLASS II	EMBANKMENT CLASS III	EMBANKMENT CLASS IV	EMBANKMENT CLASS V	TRENCH CLASS II	TRENCH CLASS III	TRENCH CLASS IV	TRENCH CLASS V
		MAXIMUM FILL HEIGHT ABOVE TOP OF PIPE IN FEET							
12	12	11	11	16	23	18	18	26	37
18	12	10	10	25	39	14	14	31	45
24	12	11	11	15	31	15	15	22	40
30	12	9	13	16	35	13	17	20	46
36	12	9	9	20	41	11	14	26	56
48	12	12	14	26	44	16	17	31	50
60	12	15	17	28	44	15	20	32	50
72	12	13	17	31	41	16	20	35	49
84	12	13	19	31		15	23	37	
96	12	13	20			16	24		
108	12	16	20			19	26		

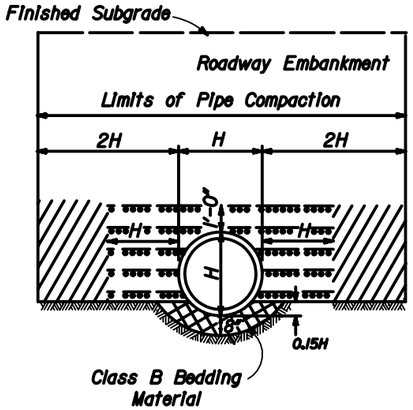

EMBANKMENT INSTALLATION

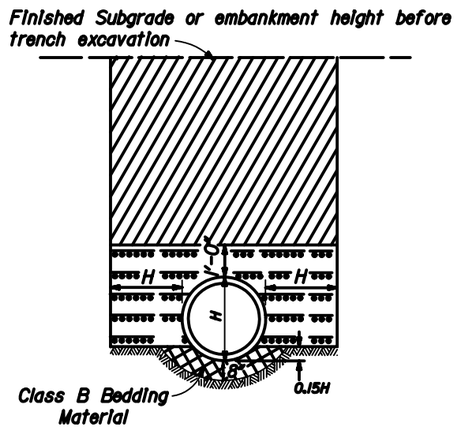

TRENCH INSTALLATION

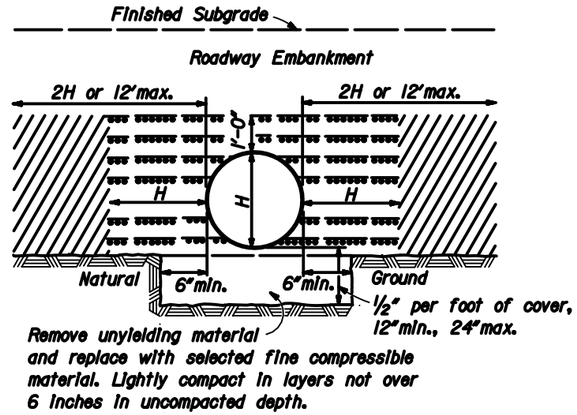

ON UNYIELDING MATERIAL

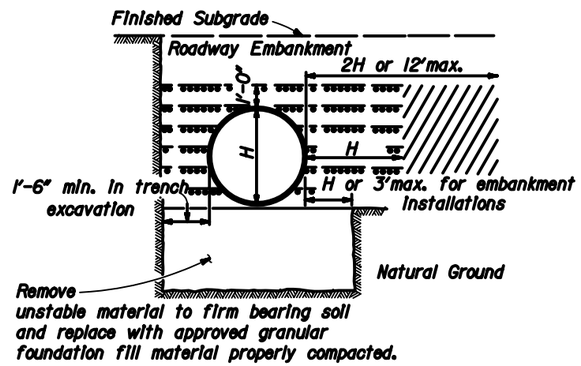

ON UNSTABLE MATERIAL

LEGEND:

- Bedding Material
- Approved granular material or fine compactable soil placed in layers not exceeding 6" compacted depth.
- Embankment material placed in layers not exceeding 6"compacted depth.
- Impermeable backfill material

NOTE:

1. When directed, camber pipe culverts upward from a chord through the inlet and outlet inverts an ordinate amount equal to 1% of the pipe length. Develop camber on a parabolic curve. If the midpoint elevation on the parabolic curve as designed exceeds the elevation of the inlet invert, reduce the amount of camber or increase the pipe culvert gradient.
2. Measure minimum cover from the top of the pipe culvert to the subgrade for flexible pavements, and to the top of the pavement for rigid pavements. Measure maximum fill height from the top of the pipe to the top of the pavement for both flexible and rigid pavements.
3. Pipe compaction limits shown are for pipe installation in an embankment. For pipe installation in a trench, the compaction limits shall be the walls of the trench.
4. When grades exceed 10%, install supplemental concrete pipe ties on pipe culvert or install bell and spigot pipe.
5. Maximum fill heights for pipe culvert installations may be increased on approval of site-specific structural pipe designs meeting the criteria of AASHTO Standard Specifications for Highway Bridges.

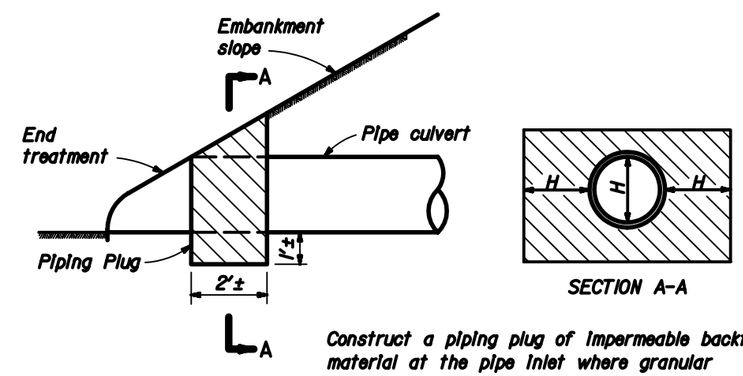

SECTION A-A

Construct a piping plug of impermeable backfill material at the pipe inlet where granular material is used for backfill.

PIPING PLUG

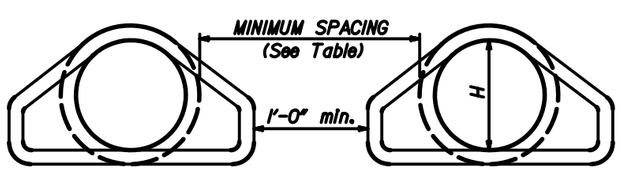

MINIMUM SPACING		
DIAMETER INCHES	EMBANKMENT	TRENCH
12-36	15"	2H
36-96	W/2	72"
OVER 96	48"	72"

MULTIPLE ROUND PIPE INSTALLATION

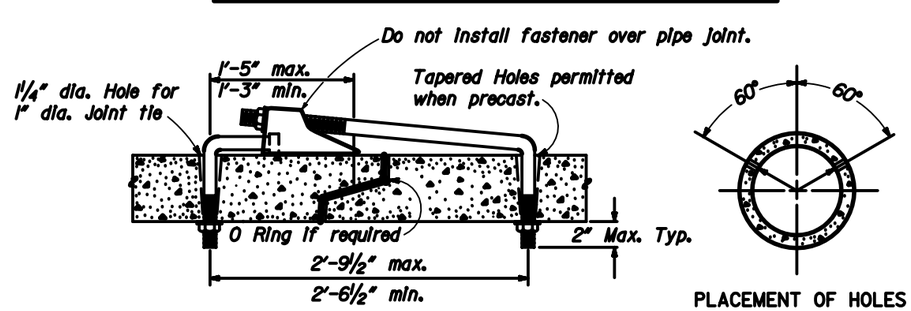

PLACEMENT OF HOLES

SUPPLEMENTAL CONCRETE PIPE TIE

U.S. DEPARTMENT OF TRANSPORTATION
FEDERAL HIGHWAY ADMINISTRATION
EASTERN FEDERAL LANDS HIGHWAY DIVISION

STANDARD

CONCRETE PIPE CULVERT INSTALLATION

STANDARD APPROVED FOR USE XX/XX

REVISED: XX/XX

STANDARD E602-7

NPS	REG	STATE	PROJECT	SHEET NO.	TOTAL SHEETS
821 / 41920	NC	DC	PRA-ROCR 345, 204(1)	106	139

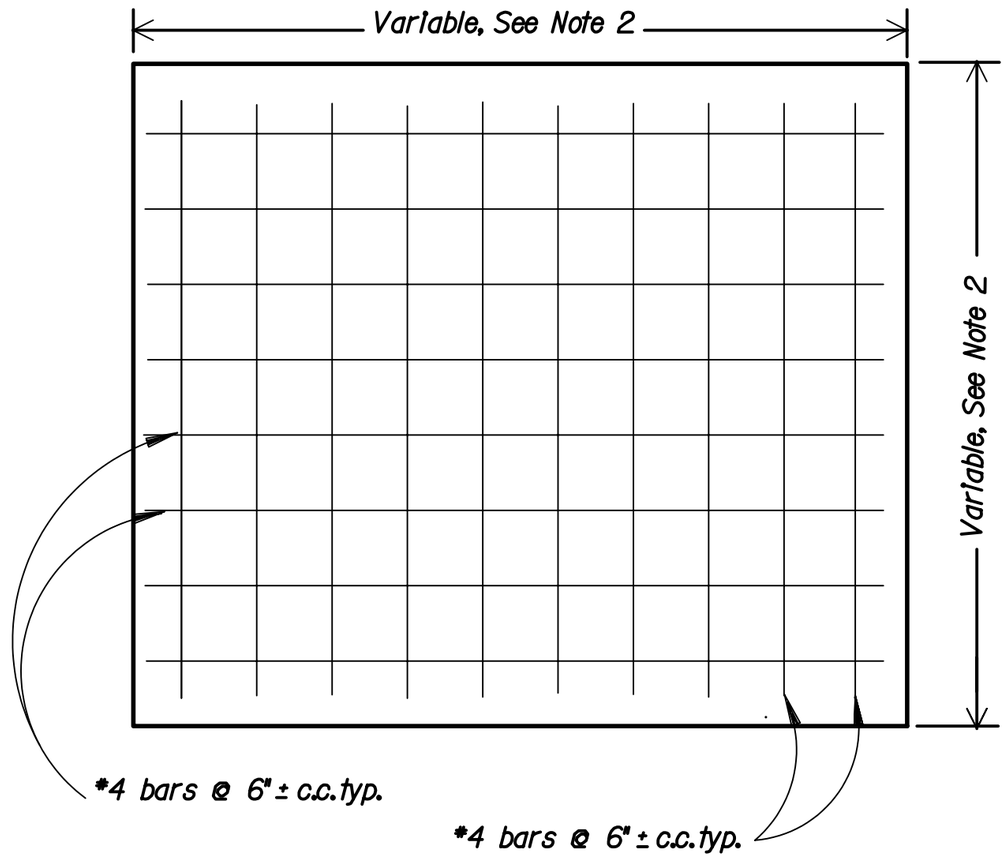

PLAN

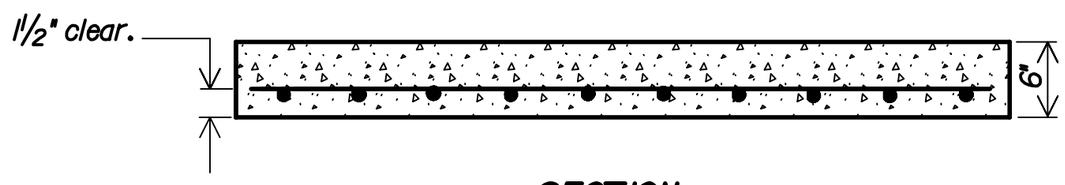

SECTION

NOTES:

1. Set concrete cap on a 2" mortar bed.
2. Field measure the length and width of the caps to completely cover the existing inlets.
3. Cut the top of the existing inlets to a depth such that 6 inches remain above the highest existing culvert tying into the inlet.
4. All reinforcing bars are to have a 1½" clearance to the outside face.

U.S. DEPARTMENT OF TRANSPORTATION
FEDERAL HIGHWAY ADMINISTRATION
EASTERN FEDERAL LANDS HIGHWAY DIVISION

DETAIL

PRECAST CONCRETE INLET CAP

DETAIL APPROVED FOR USE XX/XX
REVISED:

DETAIL E604-8

...\deE604-8.dgn 8/15/2006 10:20:37 AM

NPS	REG	STATE	PROJECT	SHEET NO.	TOTAL SHEETS
821 / 41920	NC	DC	PRA-ROCR 3A5, 2040	107	139

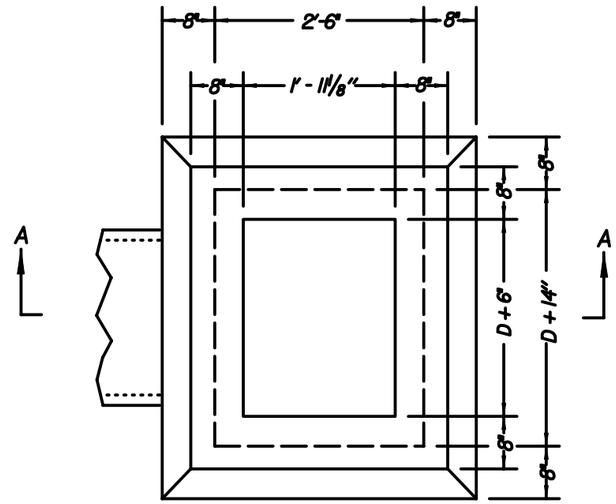

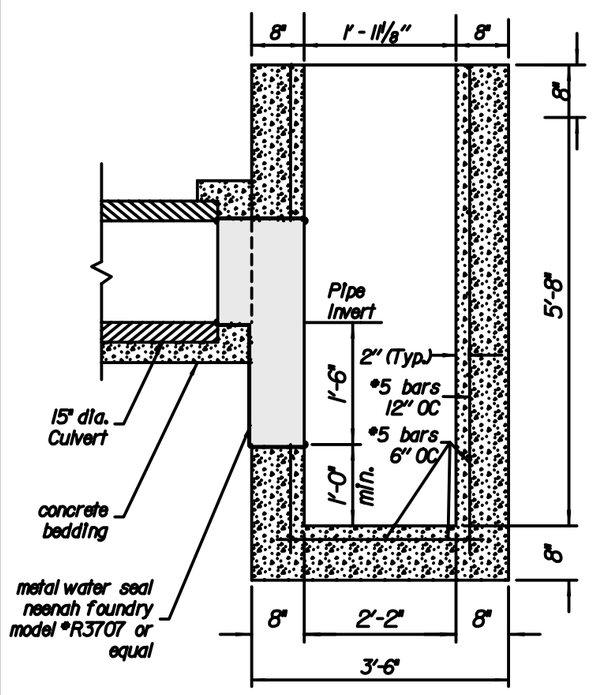

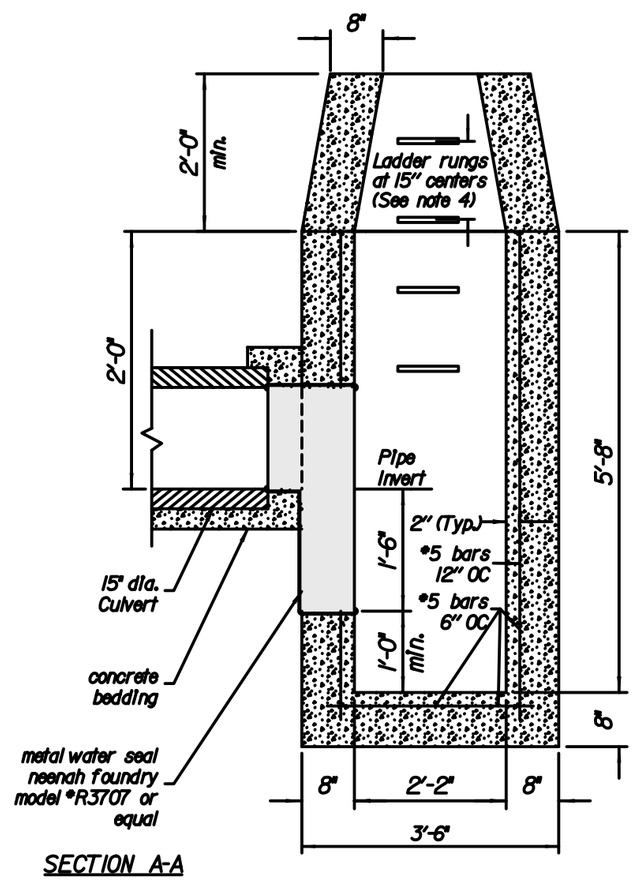

SECTION A-A
TYPE 6A-6 INLET

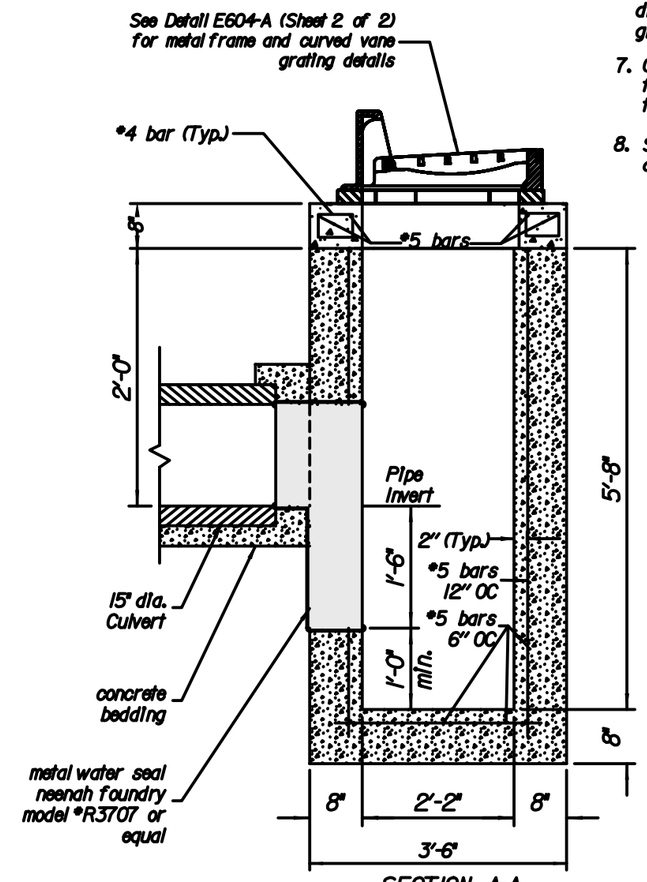

SECTION A-A
TYPE 6A-6 INLET

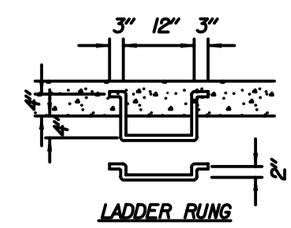

LADDER RUNG

Notes:

1. At the option of the Contractor walls less than 4 feet may be of either concrete block or concrete as shown.
2. Construct Type 6A-6 Inlets for pipes 24 inch and larger for "Limited Headroom", unless otherwise directed by the CO.
3. Construct Inlets parallel to the roadway centerline and grade. For pipes on skew, adapt Inlets as directed by the CO.
4. Construct ladder rungs of 3/4" round or square steel or wrought iron where depth exceeds 4'.
5. For frames and gratings, minor variations in design and dimensions are permitted to allow manufacturers standards. All grates are to be bicycle safe.
6. Orient curved vanes toward direction of stormwater flow. In a sump condition, orientation of curved vanes can be in either direction. Contractor is responsible for correct grate orientation towards stormwater flow.
7. Construct Type 6A-6 metal frame and grating for 6" reveal, unless otherwise directed by the CO.
8. See Detail E604-A (Sheet 2 of 2) for metal frame and grate, Type 6A-6 (curved vane grate) details.

Not to Scale

U.S. DEPARTMENT OF TRANSPORTATION
FEDERAL HIGHWAY ADMINISTRATION
EASTERN FEDERAL LANDS HIGHWAY DIVISION

DETAIL

INLET, TYPE 6A-6 MODIFIED

SHEET 1 OF 2

DETAIL APPROVED FOR USE —/—

REVISED: 9/95 7/98 3/02

DETAIL E604-A

NPS	REG	STATE	PROJECT	SHEET NO.	TOTAL SHEETS
821 / 41920	NC	DC	PRA-ROCR 3A5, 2040	108	139

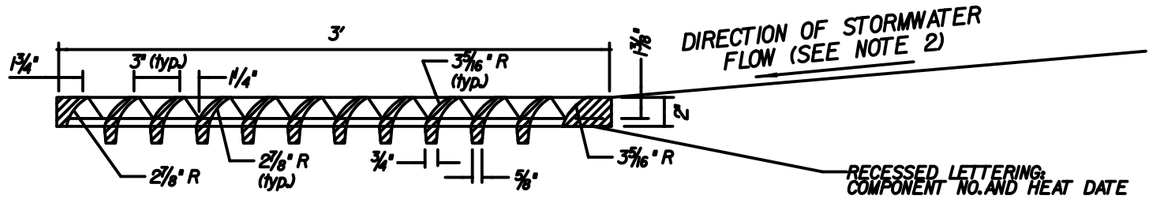

FRONT ELEVATION GRATE TYPE 6A-6 MODIFIED (CURVED VANE GRATINGS)

Notes:

1. For frames and gratings, minor variations in design and dimensions are permitted to allow manufacturers standards. All grates are to be bicycle safe.
2. Orient curved vanes toward direction of stormwater flow. In a sump condition, orientation of curved vanes can be in either direction. Contractor is responsible for correct grate orientation towards stormwater flow.

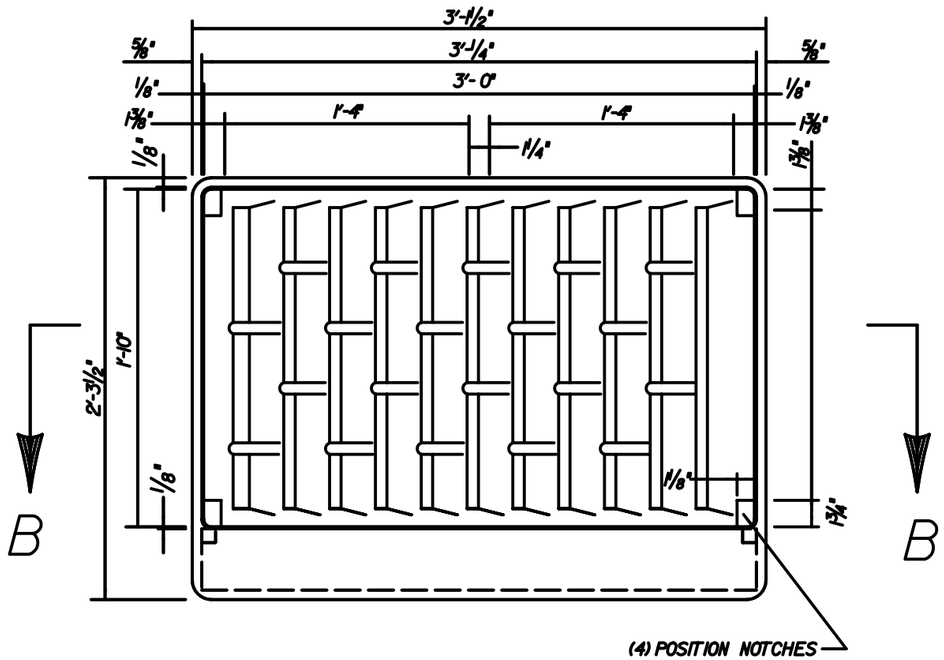

TOP VIEW FRAME AND GRATE TYPE 6A-6 MODIFIED (CURVED VANE GRATINGS)

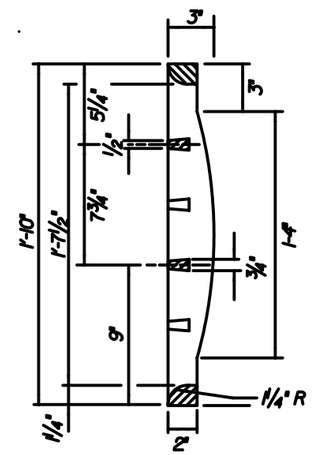

SIDE ELEVATION GRATE TYPE 6A-6 MODIFIED (CURVED VANE GRATINGS)

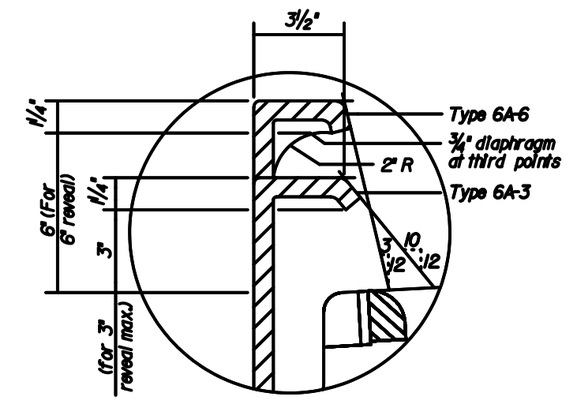

DETAIL A

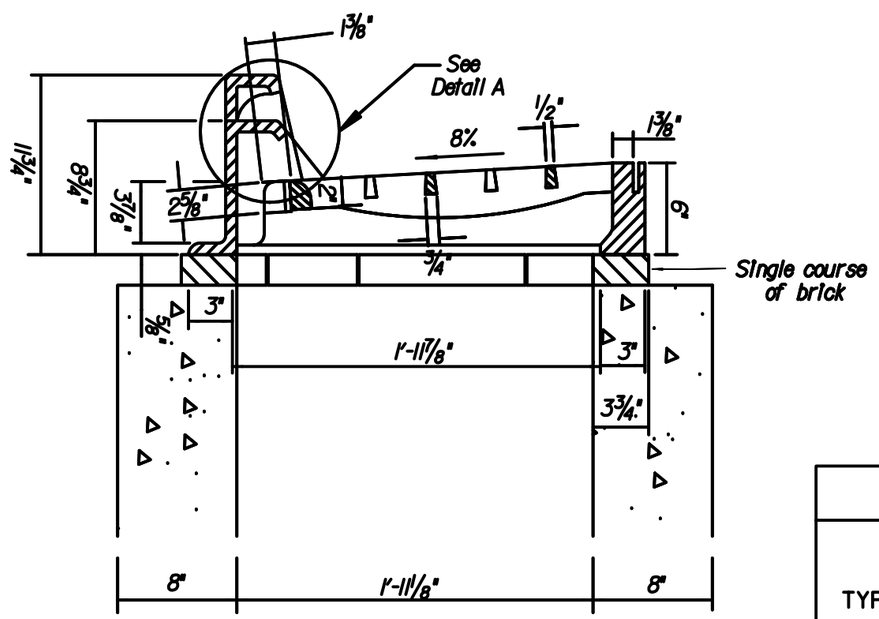

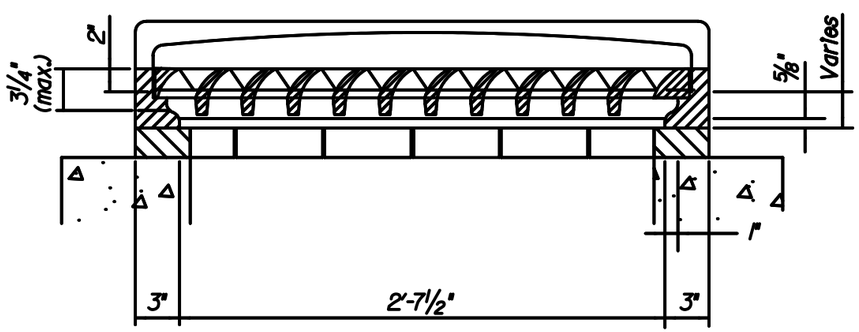

SECTION B-B

METAL FRAMES AND GRATINGS TYPE 6A-6 MODIFIED

Not to Scale

U.S. DEPARTMENT OF TRANSPORTATION
FEDERAL HIGHWAY ADMINISTRATION
EASTERN FEDERAL LANDS HIGHWAY DIVISION

DETAIL

U.S. DEPARTMENT OF TRANSPORTATION
FEDERAL HIGHWAY ADMINISTRATION
EASTERN FEDERAL LANDS HIGHWAY DIVISION

DETAIL

METAL FRAME AND GRATE, TYPE 6A-6 (CURVED VANE GRATE)

SHEET 2 OF 2

DETAIL APPROVED FOR USE —/—

REVISED: 9/95 7/98 3/02

DETAIL E604-A

...\deE604-a.dgn 8/15/2006 10:26:04 AM

NPS	REG	STATE	PROJECT	SHEET NO.	TOTAL SHEETS
821 4/920	NC	DC	PRA-ROCR 3A5, 204(1)	109	139

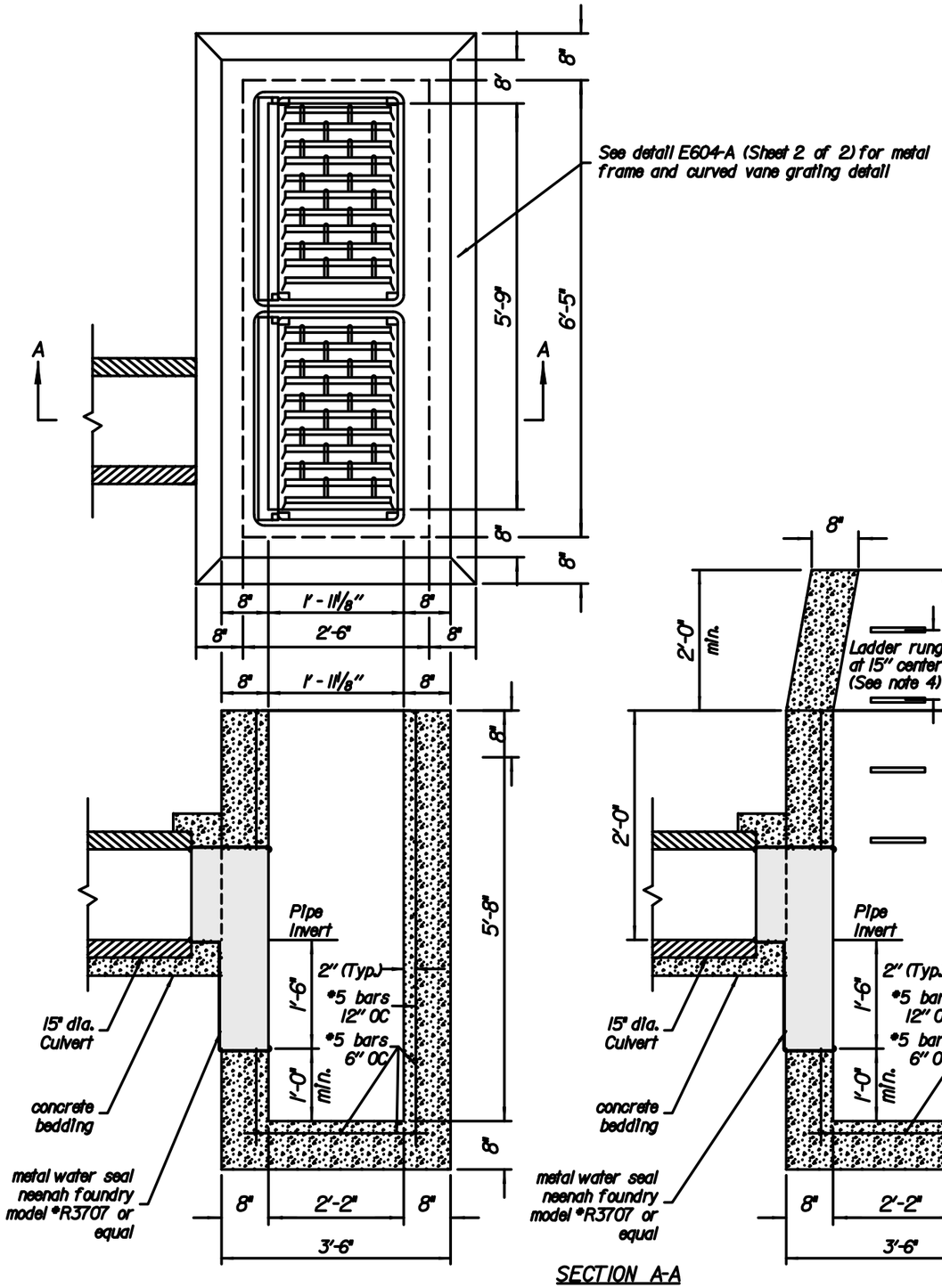

SECTION A-A

TYPE 6A-6 INLET

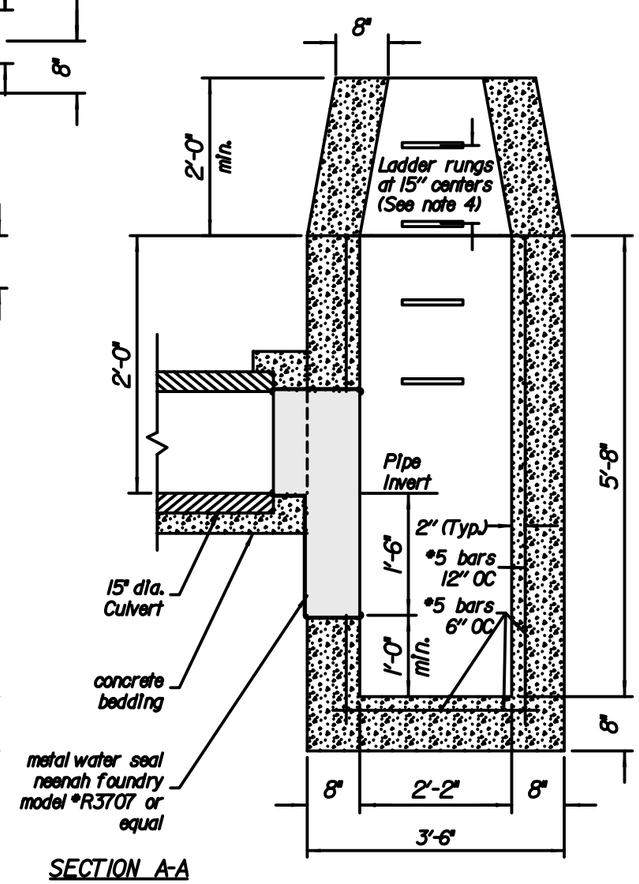

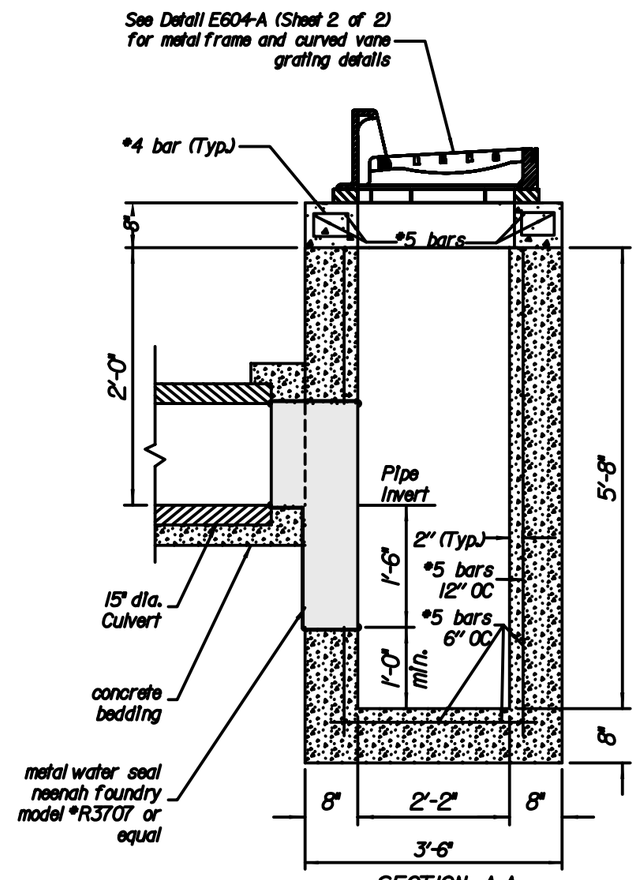

SECTION A-A

TYPE 6A-6 INLET

Not to Scale

Notes:

1. At the option of the Contractor walls less than 4 feet may be of either concrete block or concrete as shown.
2. Construct Type 6A-6 double inlets for pipes 24 inch and larger for Limited Headroom, unless otherwise directed by the CO.
3. Construct inlets parallel to the roadway centerline and grade. For pipes on skew, adapt inlets as directed by the CO.
4. Construct ladder rungs of 3/4" round, square steel or wrought iron where depth exceeds 4'.
5. For frames and gratings, minor variations in design and dimensions are permitted to allow manufacturers standards. All grates are to be bicycle safe.
6. Orient curved vanes toward direction of stormwater flow. In a sump condition, orientation of curved vanes can be in either direction. Contractor is responsible for correct grate orientation towards stormwater flow.
7. Construct Type 6A-6 metal frame and grating for 6" reveal, unless otherwise directed by the CO.
8. See Detail E604-A (Sheet 2 of 2) for metal frame and grate, Type 6A-6 (curved vane grate) details.

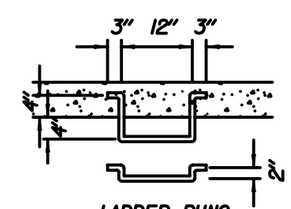

LADDER RUNG

U.S. DEPARTMENT OF TRANSPORTATION
FEDERAL HIGHWAY ADMINISTRATION
EASTERN FEDERAL LANDS HIGHWAY DIVISION

DETAIL

INLET, TYPE 6A-6 DOUBLE MODIFIED

SHEET 1 OF 1

DETAIL APPROVED FOR USE —/—

REVISED: 9/95 7/98 3/02

DETAIL E604-B

...\deE604-b.dgn 8/15/2006 10:27:08 AM

NPS	REG	STATE	PROJECT	SHEET NO.	TOTAL SHEETS
821 / 41920	NC	DC	PRA-ROCR 3A5, 204(1)	110	139

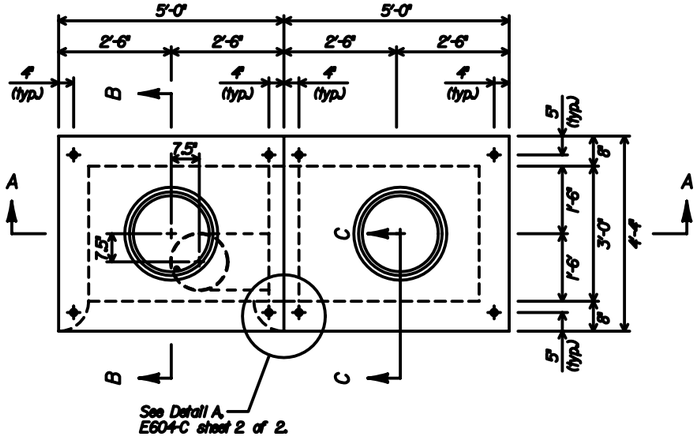

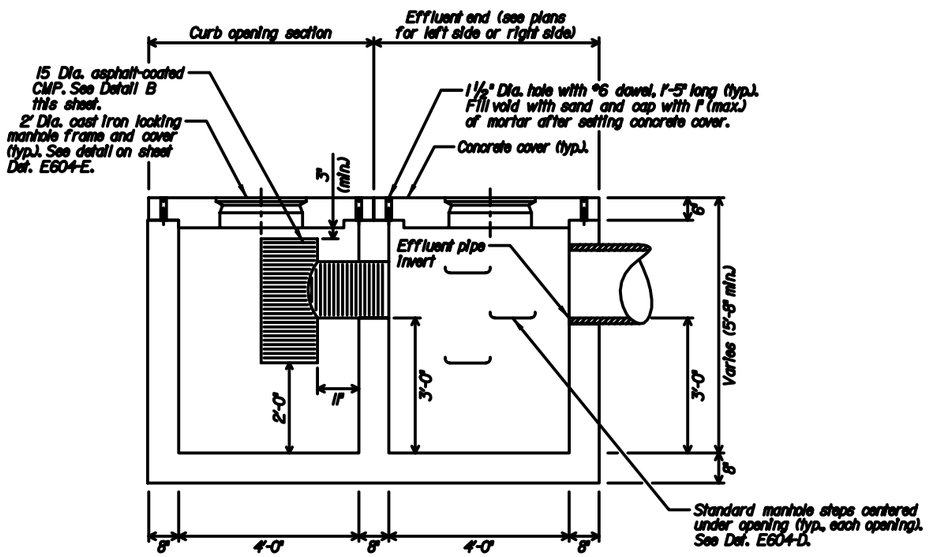

SECTION A-A

CATCH BASIN, TYPE 2
(MODIFIED)

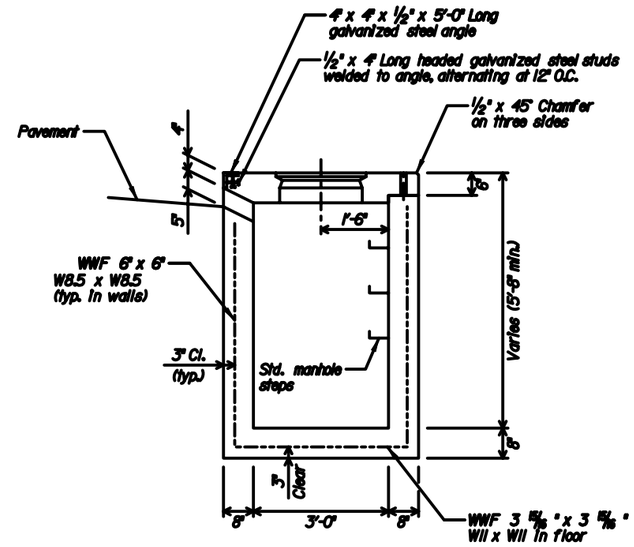

SECTION B-B

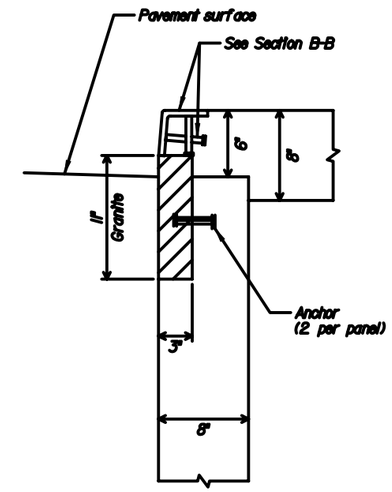

SECTION C-C

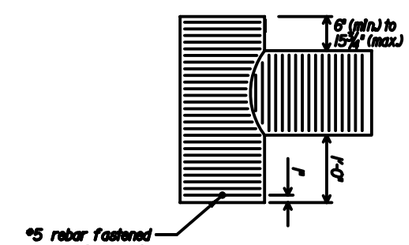

DETAIL B

CMP Pipe Tee

Notes:

1. See E604-C sheet 2 of 2 for additional details.
2. Center #5 rebar across pipe opening. Use hooks, mechanical fasteners, or other methods approved by the CO to prevent bar from sliding out of holes in pipes.

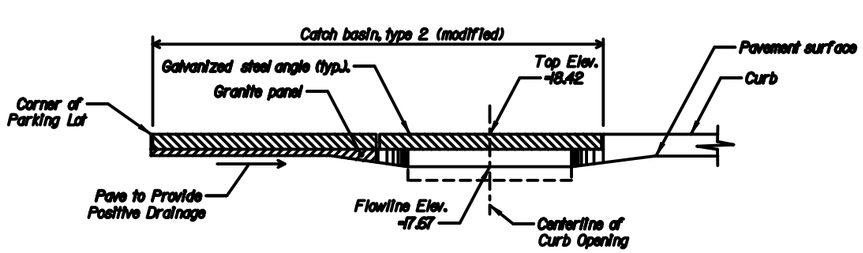

ELEVATION VIEW FOR INLET I-8

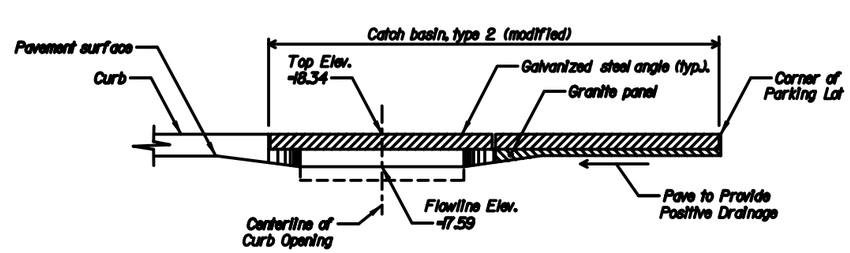

ELEVATION VIEW FOR INLET I-9

NOT TO SCALE

U.S. DEPARTMENT OF TRANSPORTATION
FEDERAL HIGHWAY ADMINISTRATION
EASTERN FEDERAL LANDS HIGHWAY DIVISION

DETAIL

CATCH BASIN
TYPE 2

SHEET 1 OF 2

DETAIL APPROVED FOR USE XX/XX

REVISED: XX/XX

DETAIL E604-C

NPS	REG	STATE	PROJECT	SHEET NO.	TOTAL SHEETS
821 / 41920	NC	DC	PRA-ROCR 3A5, 204(1)	111	139

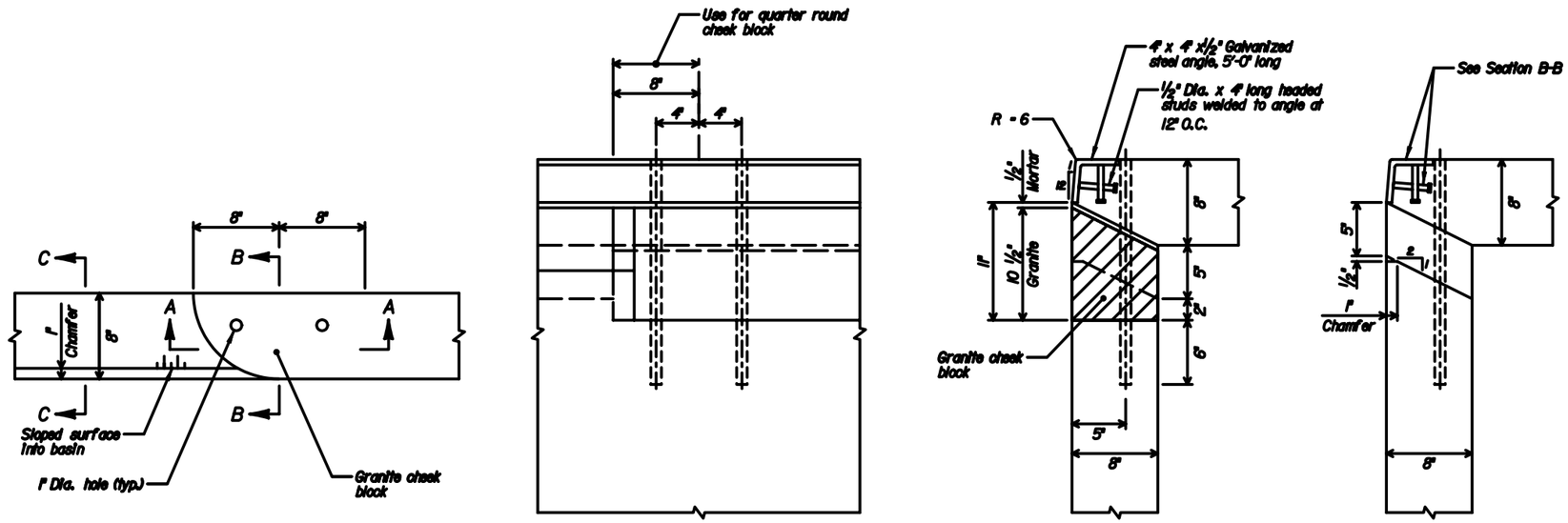

DETAIL A

Granite Cheek Block

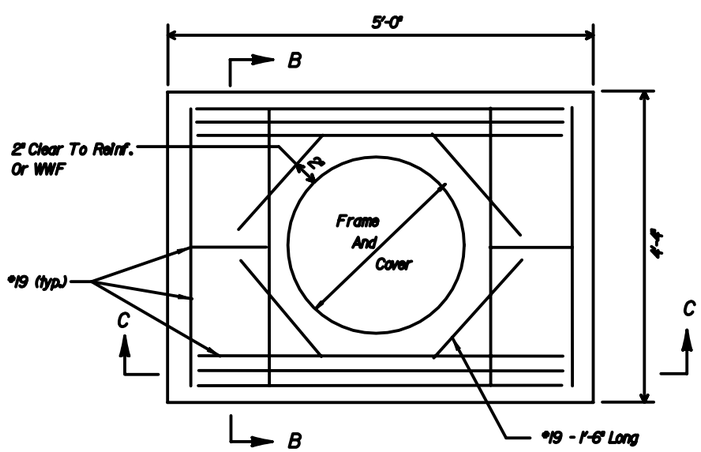

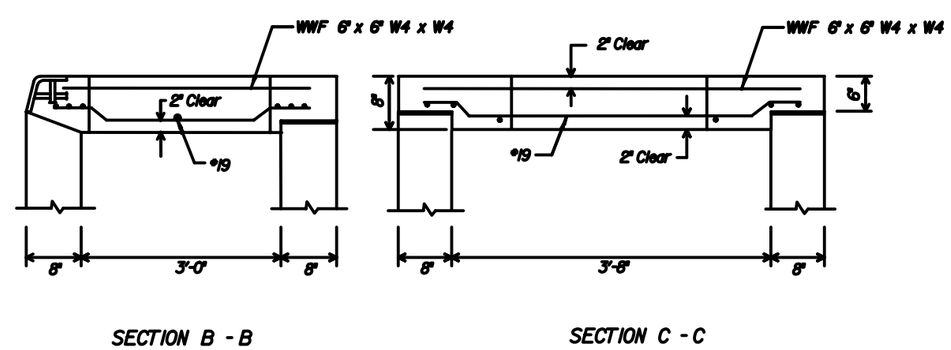

CONCRETE COVER

NOTE:

1. Use exposed aggregate concrete covers on inlets located in REAC sidewalks.
2. Use simulated granite covers on inlets located in grassed areas.

NOT TO SCALE

U.S. DEPARTMENT OF TRANSPORTATION
FEDERAL HIGHWAY ADMINISTRATION
EASTERN FEDERAL LANDS HIGHWAY DIVISION

DETAIL

CATCH BASIN, TYPE 2

SHEET 2 OF 2

DETAIL APPROVED FOR USE XX/XX

REVISED: XX/XX

DETAIL E604-C

NPS	REG	STATE	PROJECT	SHEET NO.	TOTAL SHEETS
821 / 41920	NC	DC	PRA-ROCR 3A5, 204(1)	112	139

Notes:

1. *Place steps into wet cement wall during manufacture, or mortar into holes after concrete has set.*
2. *Center steps below manhole opening.*

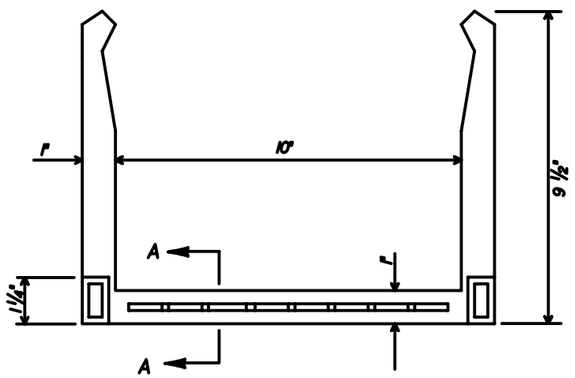

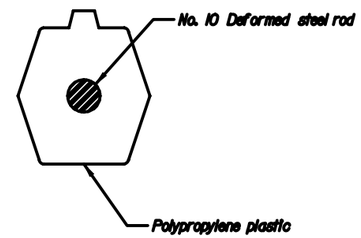

SECTION A-A

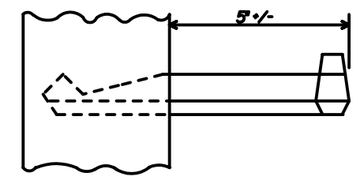

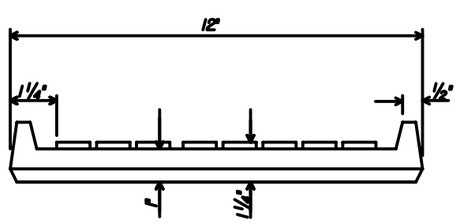

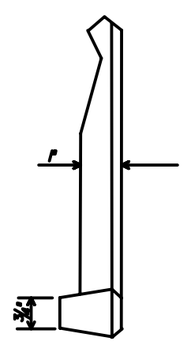

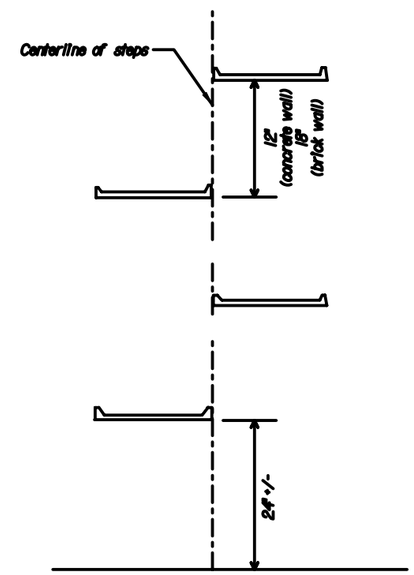

TYPICAL STEPS LOCATION

NOT TO SCALE

U.S. DEPARTMENT OF TRANSPORTATION
FEDERAL HIGHWAY ADMINISTRATION
EASTERN FEDERAL LANDS HIGHWAY DIVISION

DETAIL

STANDARD STEPS

DETAIL APPROVED FOR USE XX/XX

REVISED: XX/XX

DETAIL E604-D

NPS	REG	STATE	PROJECT	SHEET NO.	TOTAL SHEETS
821 / 41920	NC	DC	PRA-ROCR 3A5, 204(1)	113	139

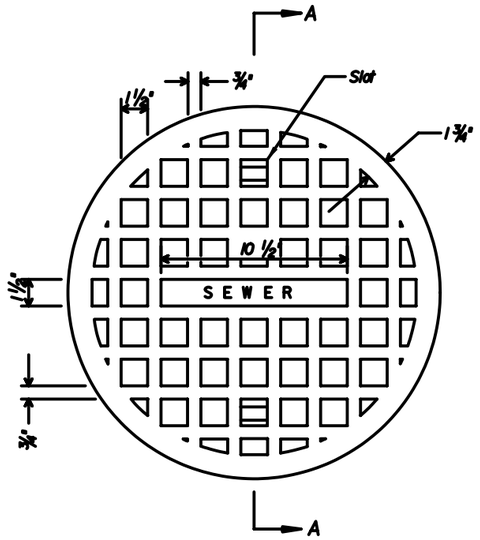

PLAN - TOP

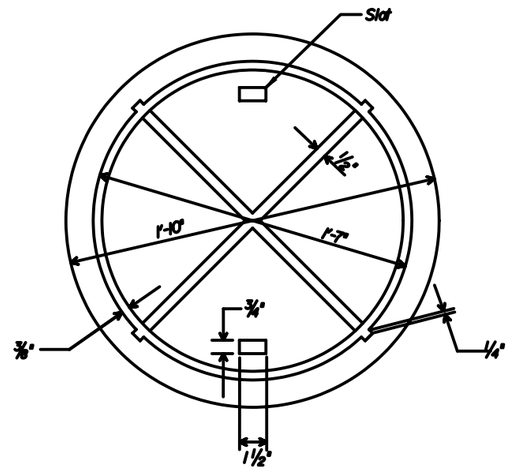

PLAN - BOTTOM

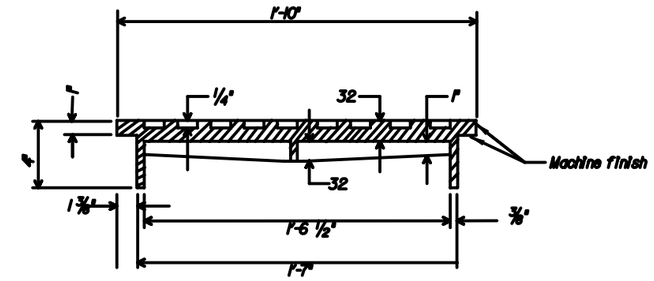

SECTION A - A

610 DIAMETER CAST IRON COVERS

Notes:

1. Gray iron casting per ASTM A-48, Class 30A.
2. All machine finish to be AAA. specification, roughness symbol 250, tolerance - 1/16".
3. Cast the word 'SEWER' in 1" letters in the depression shown in the center of top of the cover, and flush with surface cover.
4. Furnish locking manhole frames and covers designed to permit the cover to be secured in place, to prevent the cover from being lifted off of the manhole during major storm events. Submit the proposed frame and cover design to the CO for written approval at least two weeks prior to ordering manhole frames and covers.

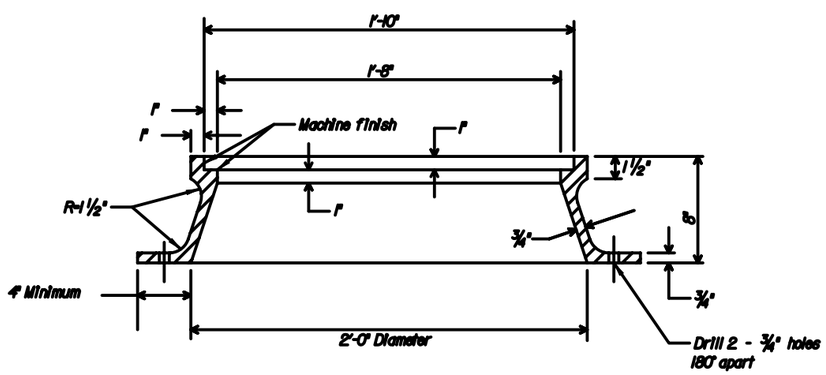

MANHOLE FRAME SECTION

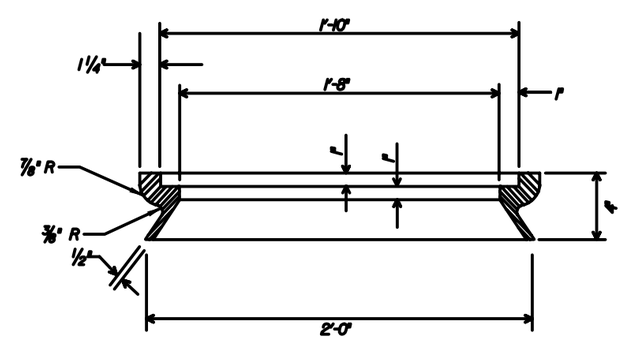

CATCH BASIN FRAME SECTION

CAST IRON FRAMES

NOT TO SCALE

U.S. DEPARTMENT OF TRANSPORTATION
FEDERAL HIGHWAY ADMINISTRATION
EASTERN FEDERAL LANDS HIGHWAY DIVISION

DETAIL

MANHOLE FRAME AND COVER

DETAIL APPROVED FOR USE XX/XX
REVISED: XX/XX

DETAIL
E604-E

NPS	REG	STATE	PROJECT	SHEET NO.	TOTAL SHEETS
821 41920	NC	DC	PRA-ROCR 345, 204(1)	114	139

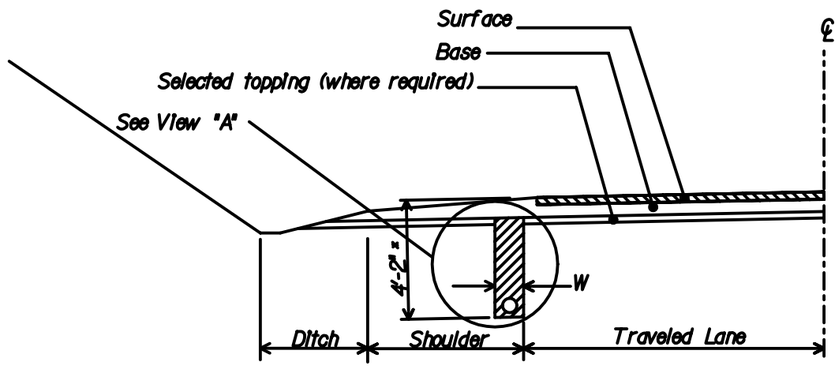

SHOULDER

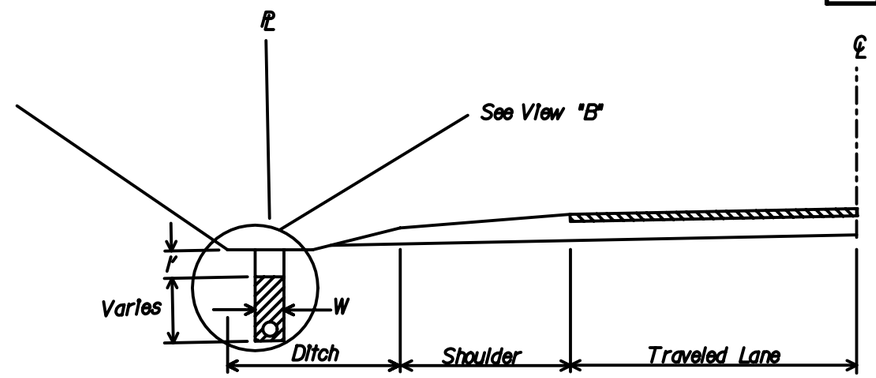

FLAT BOTTOM DITCH

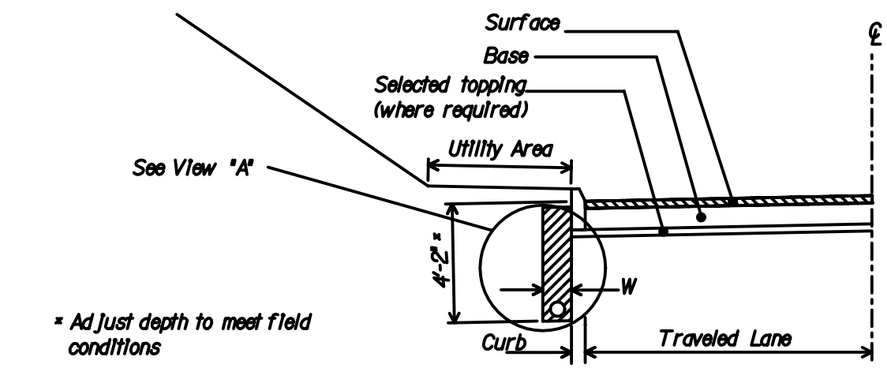

* Adjust depth to meet field conditions

CURB AND GUTTER

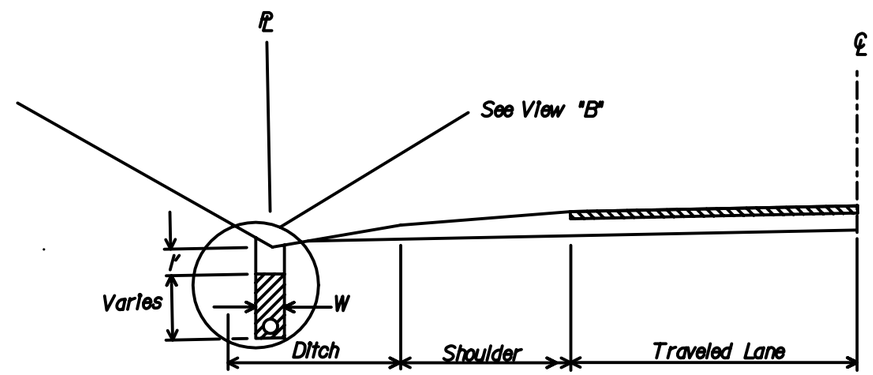

VEE DITCH

NOTES:

1. Location of pipe underdrains may be adjusted by the CO.
2. Minimum underdrain grade is 0.5 percent.

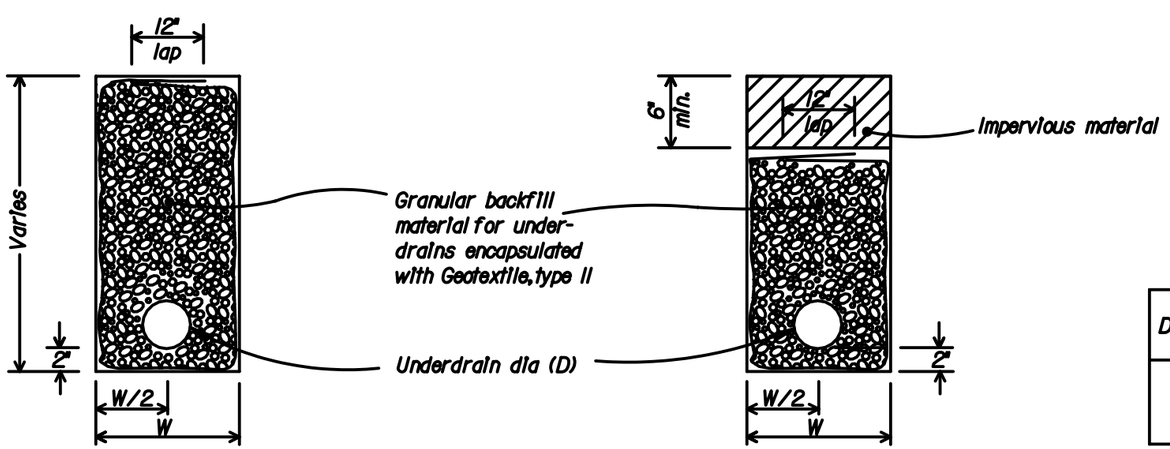

VIEW A

VIEW B

DIAMETER (D)	MINIMUM WIDTH (W)
4"	12"
6"	15"

U.S. DEPARTMENT OF TRANSPORTATION
FEDERAL HIGHWAY ADMINISTRATION
EASTERN FEDERAL LANDS HIGHWAY DIVISION

DETAIL

UNDERDRAIN, FOR PAVEMENT AND DITCHES

DETAIL APPROVED FOR USE XX/XX

REVISED: XX/XX

DETAIL E605-1

...\deE605-1.dgn 8/15/2006 10:31:23 AM

NPS	REG	STATE	PROJECT	SHEET NO.	TOTAL SHEETS
821 41920	NC	DC	PRA-ROCR 345, 204(1)	115	139

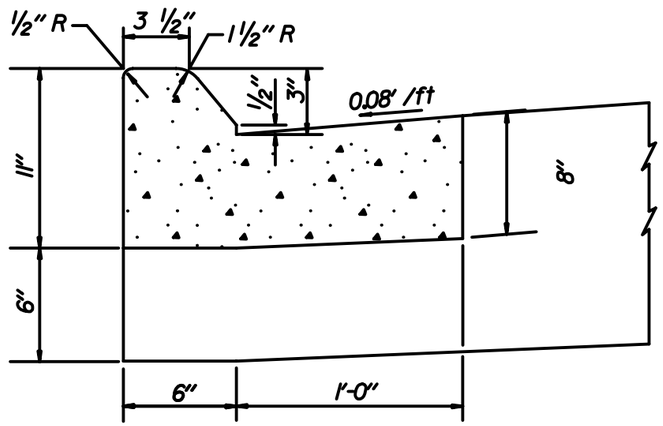

11-INCH DEPTH
(MOUNTABLE)

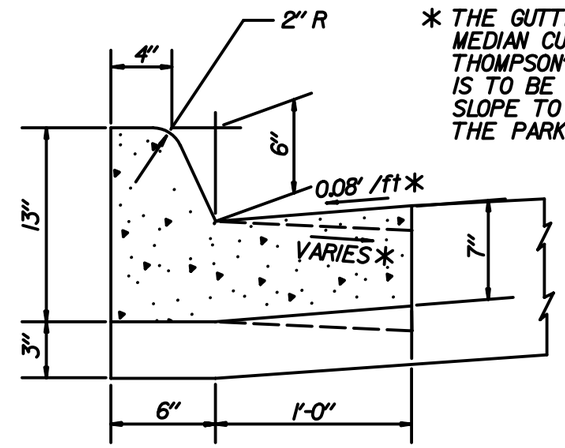

13-INCH DEPTH
(NON- MOUNTABLE)

* THE GUTTER PAN CROSS SLOPE FOR THE MEDIAN CURB AND ISLAND CURB AT THE THOMPSON'S BOAT CENTER PARKING LOT IS TO BE PAVED WITH A VARIABLE CROSS SLOPE TO MATCH THE CROSS SLOPE OF THE PARKING LOT PAVEMENT.

PORTLAND CEMENT CONCRETE CURB AND GUTTER

NOTE: Place 3-inches, minimum aggregate bed course under all curb and gutter.

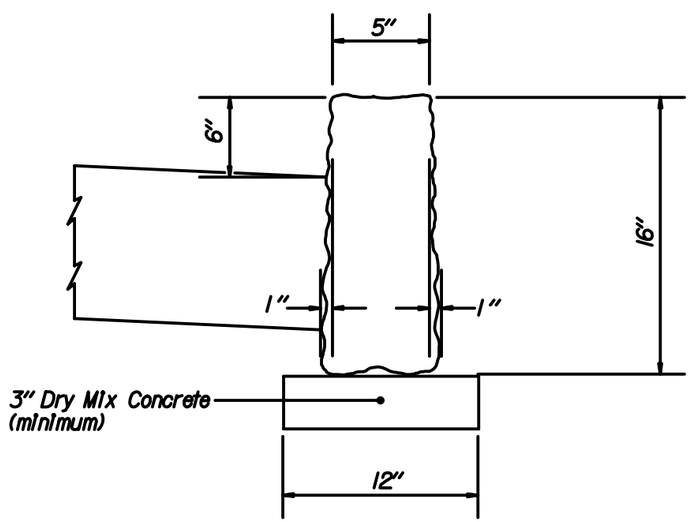

STONE (GRANITE) CURB
16-INCH DEPTH
(NON-MOUNTABLE)

NOT TO SCALE

U.S. DEPARTMENT OF TRANSPORTATION
FEDERAL HIGHWAY ADMINISTRATION
EASTERN FEDERAL LANDS HIGHWAY DIVISION

DETAIL

CURBS

DETAIL APPROVED FOR USE

REVISED:

DETAIL
E609-A

NPS	REG	STATE	PROJECT	SHEET NO.	TOTAL SHEETS
821 41920	NC	DC	FRA-ROCR 345, 204(1)	116	139

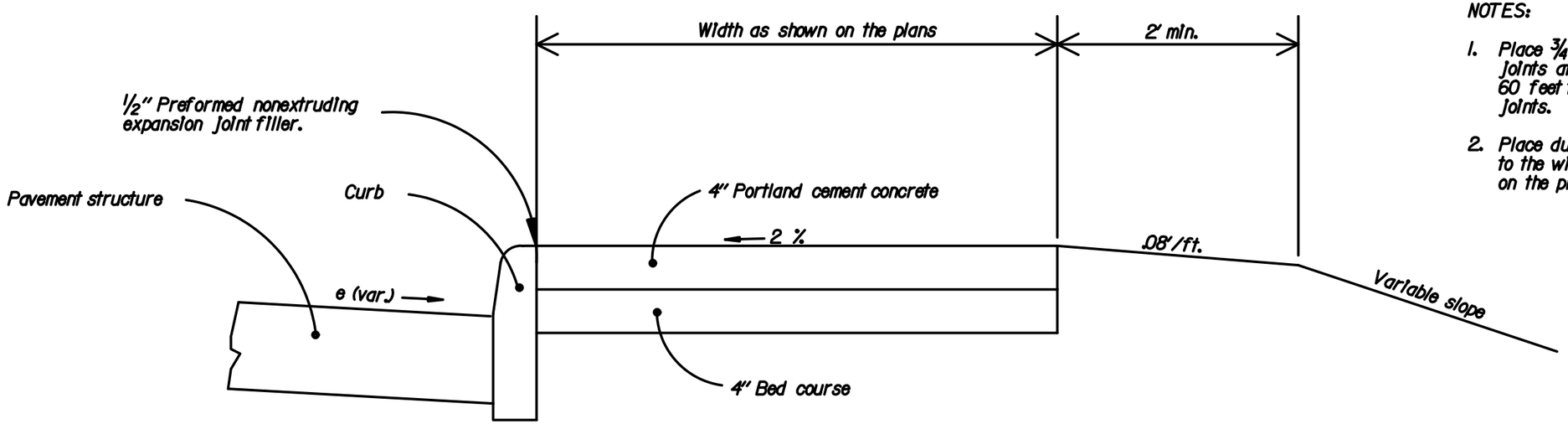

SIDEWALK WITH CURB

NOTES:

1. Place 3/4-inch transverse expansion joints at intervals of not more than 60 feet to match adjacent curb expansion joints.
2. Place dummy joints at intervals equal to the width of the sidewalk as shown on the plans.

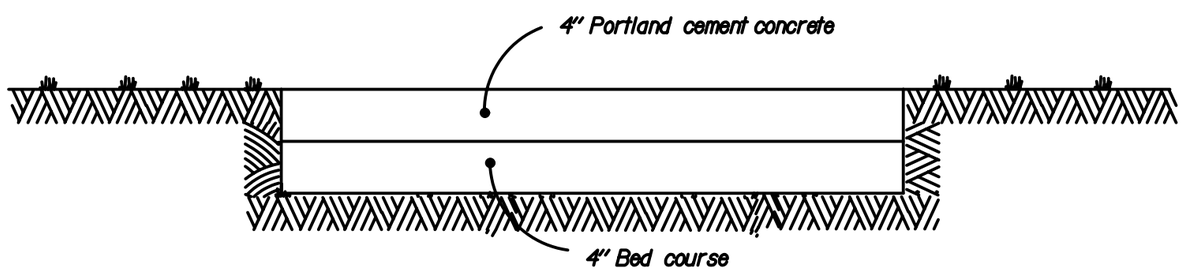

SIDEWALK

NOT TO SCALE

U.S. DEPARTMENT OF TRANSPORTATION
FEDERAL HIGHWAY ADMINISTRATION
EASTERN FEDERAL LANDS HIGHWAY DIVISION

DETAIL

PORTLAND CEMENT CONCRETE SIDEWALK

DETAIL APPROVED FOR USE XX/XX

REVISED: XX/XX

DETAIL E615-1

NPS	REG	STATE	PROJECT	SHEET NO.	TOTAL SHEETS
821 41920	NC	DC	FRA-ROCR 3A5, 204(1)	117	139

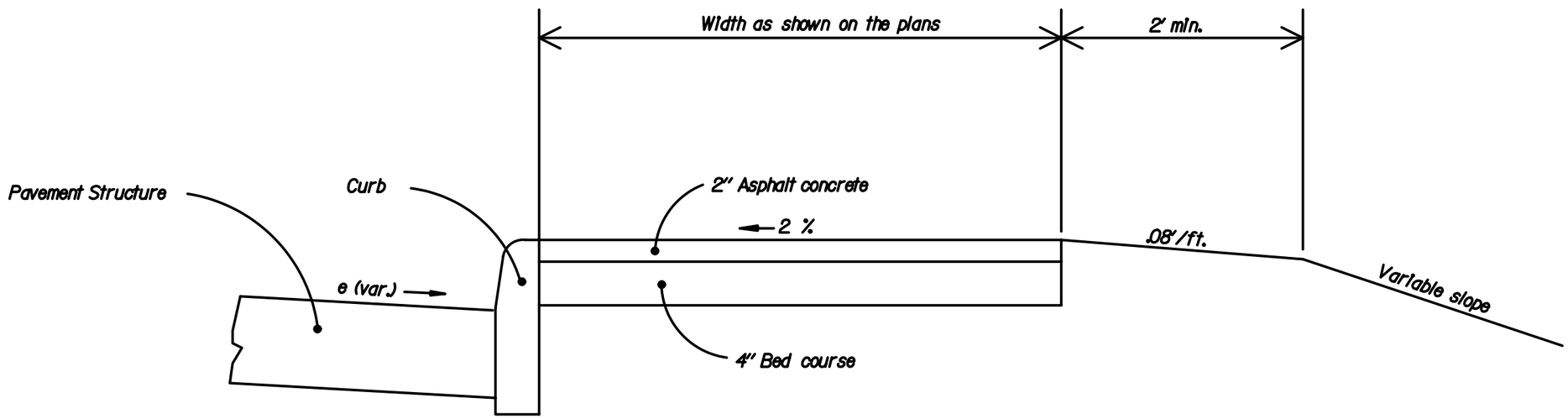

SIDEWALK WITH CURB

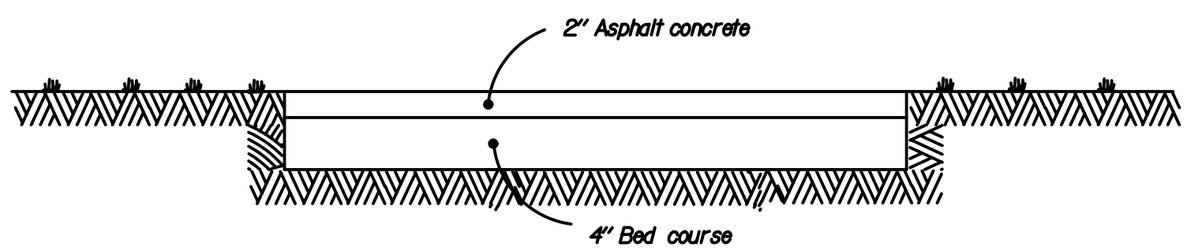

SIDEWALK

U.S. DEPARTMENT OF TRANSPORTATION
FEDERAL HIGHWAY ADMINISTRATION
EASTERN FEDERAL LANDS HIGHWAY DIVISION

DETAIL

ASPHALT
CONCRETE SIDEWALK

DETAIL APPROVED FOR USE XX/XX

REVISED: XX/XX

DETAIL
E615-2

...\deE615-2.dgn 8/15/2006 10:34:25 AM

NPS	REG	STATE	PROJECT	SHEET NO.	TOTAL SHEETS
821 41920	NC	DC	FRA-ROCR 3A5, 204(1)	118	139

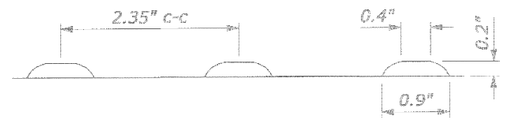

SECTION
TRUNCATED DOME

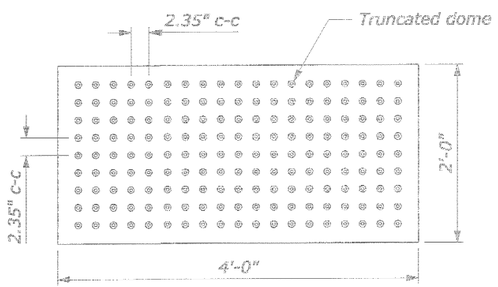

PLAN

DETECTABLE WARNING FIELD WITH TRUNCATED DOMES

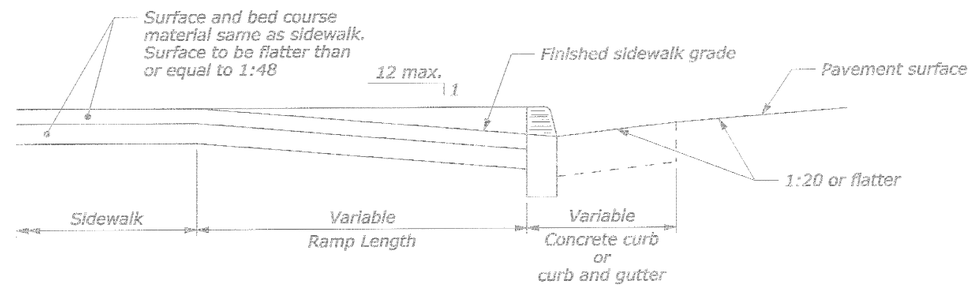

RAMP - TYPICAL SECTION

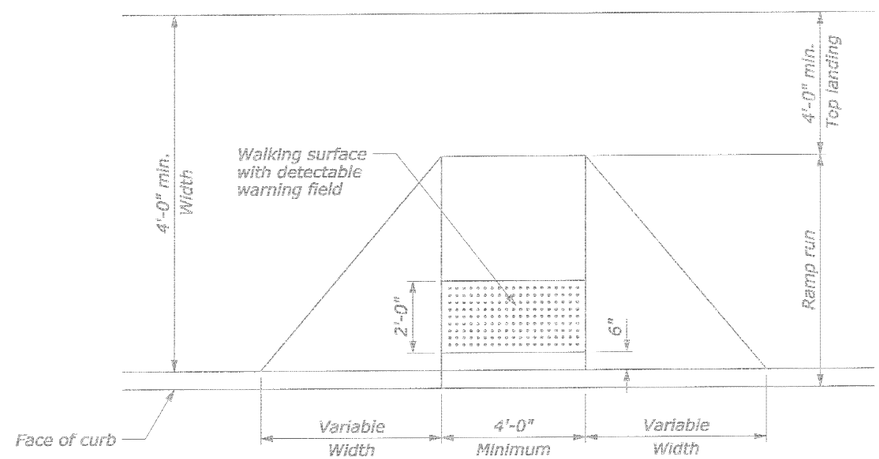

PERPENDICULAR CURB RAMP

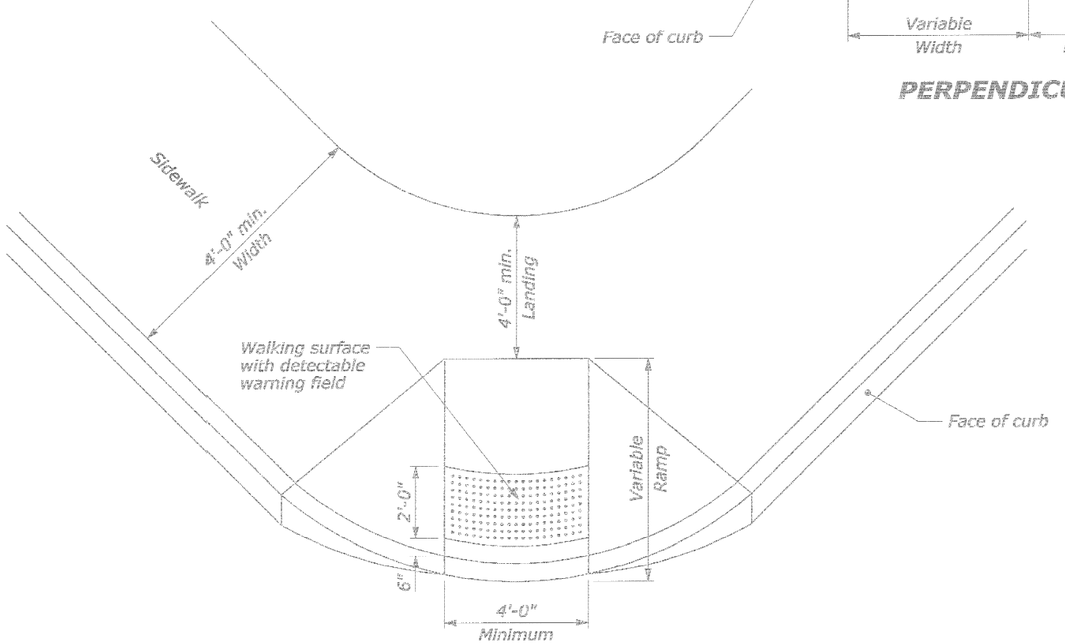

DIAGONAL CURB RAMP

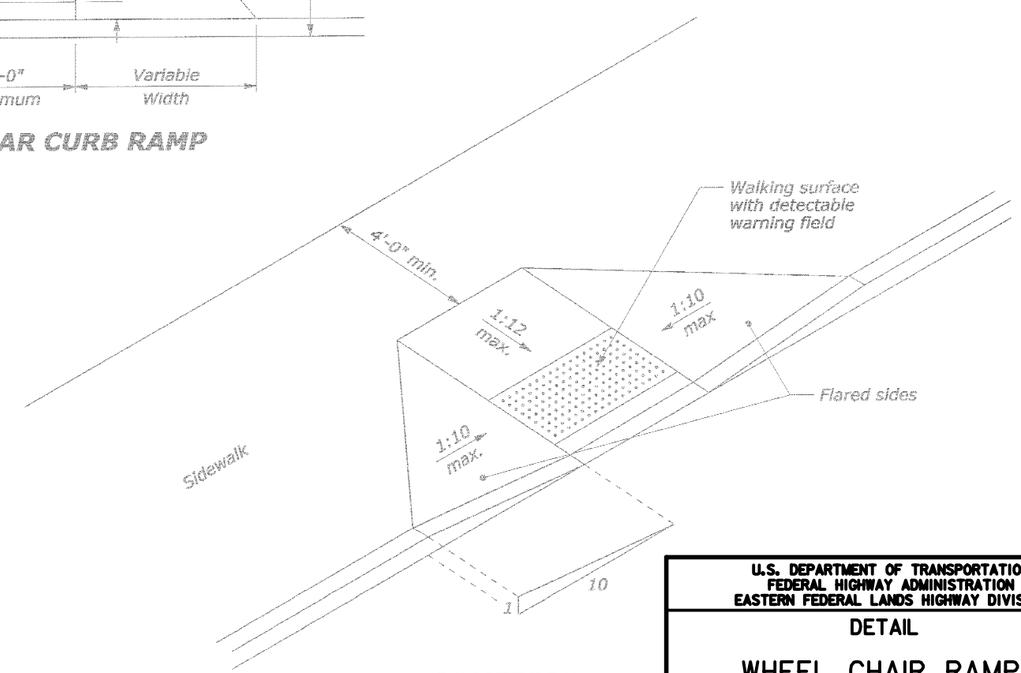

RAMP - ISOMETRIC

NO SCALE

NOTE:

1. The maximum cross slopes of ramps must not exceed 2% in any direction.
2. Use a coarse broom finish running perpendicular to the slope to create a slip resistant surface on concrete ramp surfaces, exclusive of the detectable warning fields.
3. Construct curb ramp perpendicular to the curb. Avoid skewing the ramp face.
4. Construct ramp transitions between walks, gutters, or streets that are flush and free of abrupt vertical changes not to exceed 2.5 inches.
5. Locate drainage inlets and manholes outside of ramp walking surfaces or landings.

U.S. DEPARTMENT OF TRANSPORTATION
FEDERAL HIGHWAY ADMINISTRATION
EASTERN FEDERAL LANDS HIGHWAY DIVISION

DETAIL

WHEEL CHAIR RAMP CURB CUT

DETAIL APPROVED FOR USE XX/XX

REVISED: XX/XX

DETAIL E615-3

...\dee615-3.dgn 8/15/2006 10:35:59 AM

NPS	REG	STATE	PROJECT	SHEET NO.	TOTAL SHEETS
821 / 41920	NC	DC	PRA-ROCR 3A5, 204(1)	119	139

NOTE:

1. The maximum cross slopes of ramps must not exceed 2% in any direction.
2. Use a coarse broom finish running perpendicular to the slope to create a slip resistant surface on concrete ramp surfaces, exclusive of the detectable warning fields.
3. Construct ramp transitions between walks, gutters, or streets that are flush and free of abrupt vertical changes not to exceed 2.5 inches.
4. Locate drainage inlets and manholes outside of ramp walking surfaces or landings.

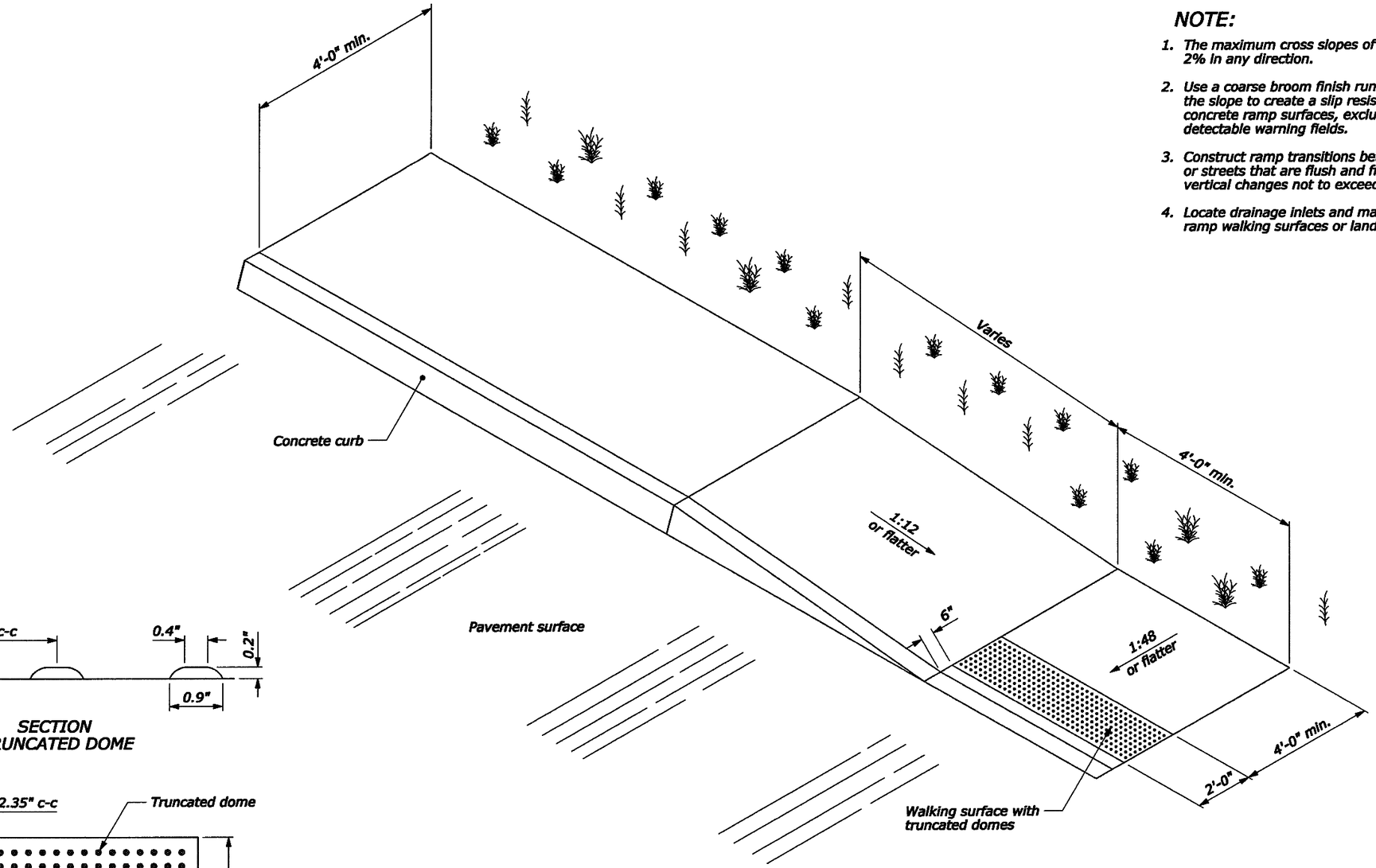

PARALLEL CURB RAMP

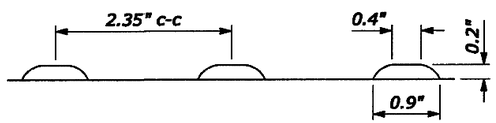

SECTION
TRUNCATED DOME

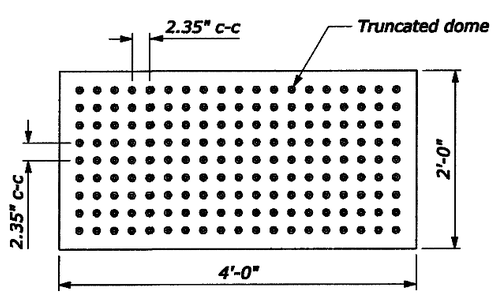

PLAN

DETECTABLE WARNING FIELD WITH TRUNCATED DOMES

NOT TO SCALE

U.S. DEPARTMENT OF TRANSPORTATION
FEDERAL HIGHWAY ADMINISTRATION
EASTERN FEDERAL LANDS HIGHWAY DIVISION

DETAIL

WHEEL CHAIR RAMP CURB TAPER

NO SCALE

DETAIL APPROVED FOR USE XX/XX

REVISED: XX/XX

DETAIL
E615-4

NPS	REG	STATE	PROJECT	SHEET NO.	TOTAL SHEETS
821 / 41920	NC	DC	PRA-ROCR 345, 204(1)	120	139

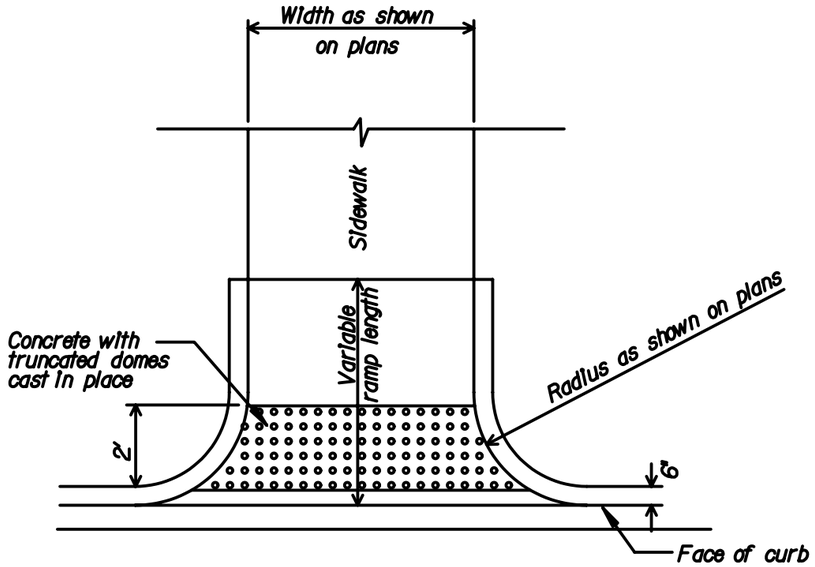

RAMP - PLAN

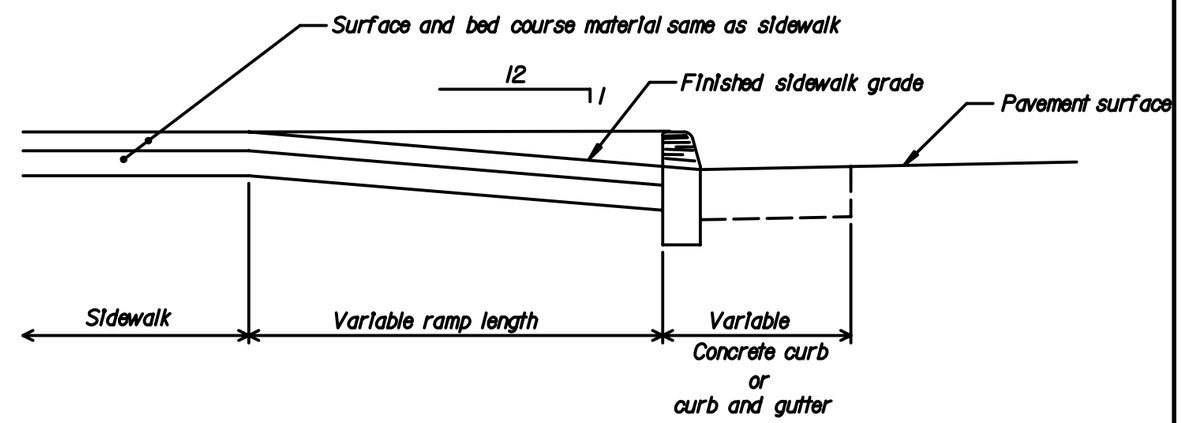

RAMP - TYPICAL SECTION

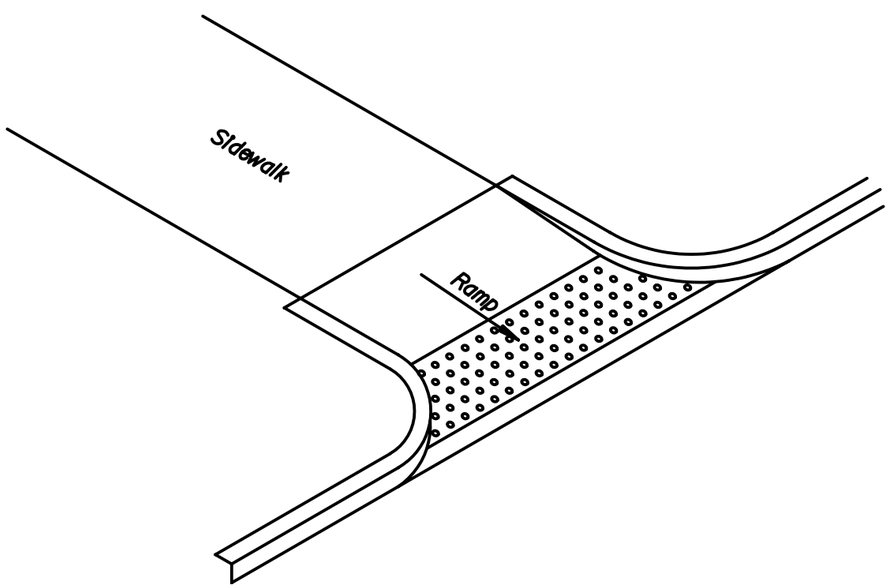

RAMP - ISOMETRIC

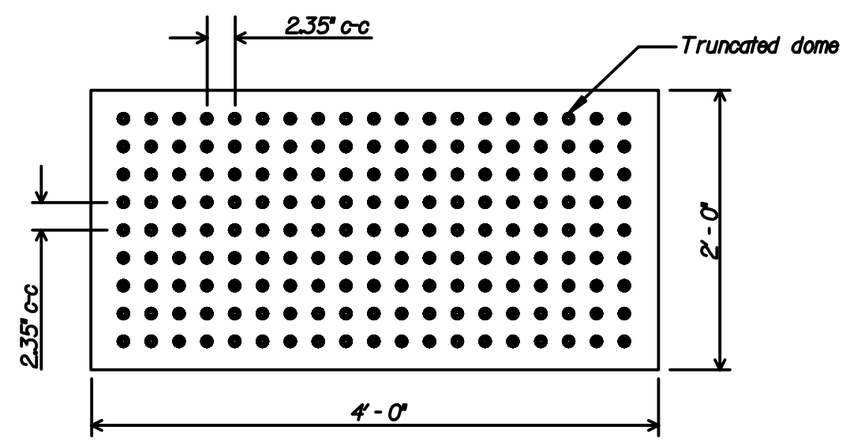

PLAN

DETECTABLE WARNING SURFACE

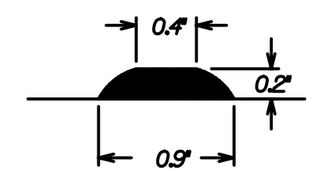

SECTION
TRUNCATED DOME

NOT TO SCALE

U.S. DEPARTMENT OF TRANSPORTATION
FEDERAL HIGHWAY ADMINISTRATION
EASTERN FEDERAL LANDS HIGHWAY DIVISION

DETAIL

WHEEL CHAIR RAMP CURB RETURN

DETAIL APPROVED FOR USE XX/XX

REVISED: XX/XX

DETAIL E615-5

NPS	REG	STATE	PROJECT	SHEET NO.	TOTAL SHEETS
821 / 41920	NC	DC	PRA-ROCR 3A5,2040	121	139

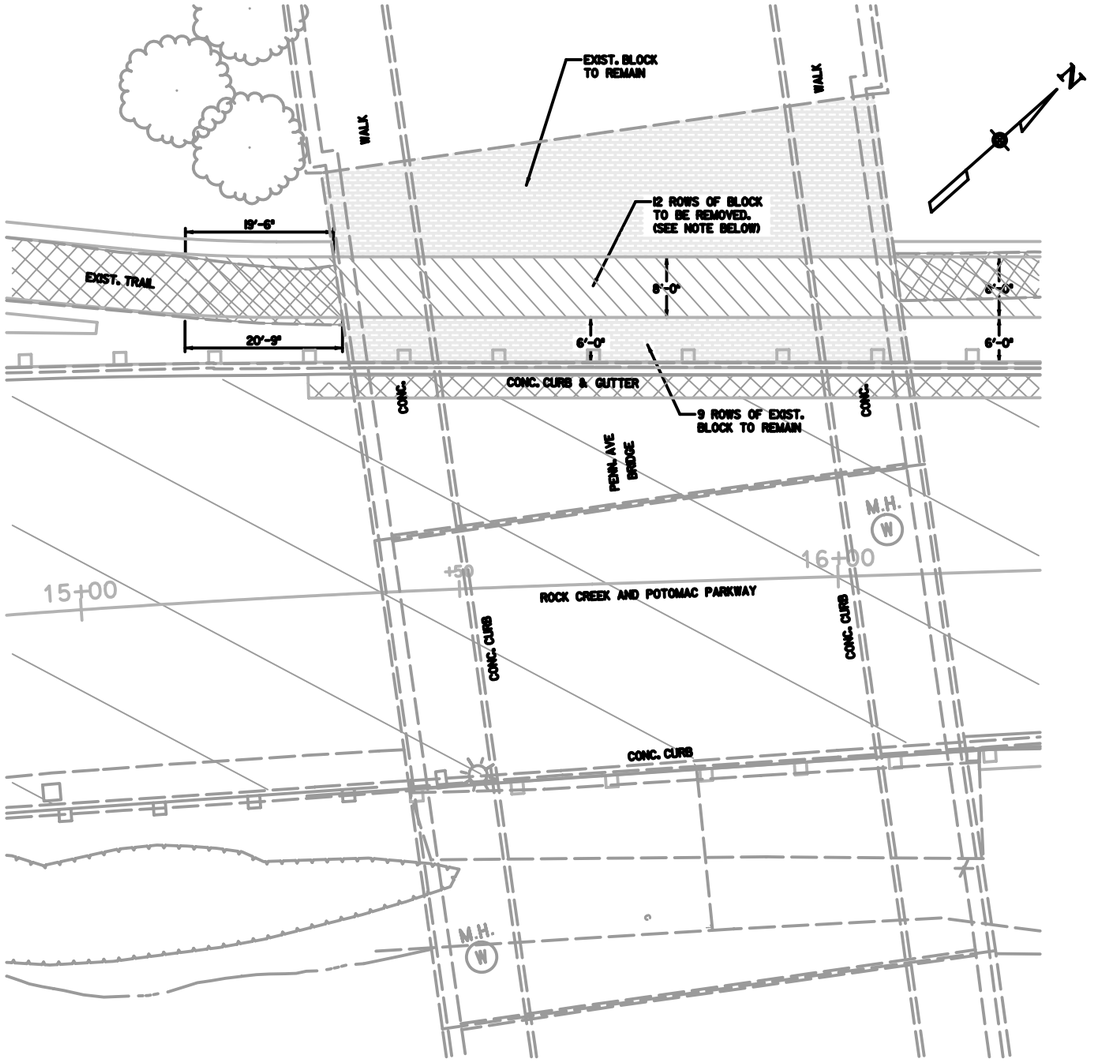

TRAIL AT PENNSYLVANIA AVE. BRIDGE

SCALE 1"= 10'

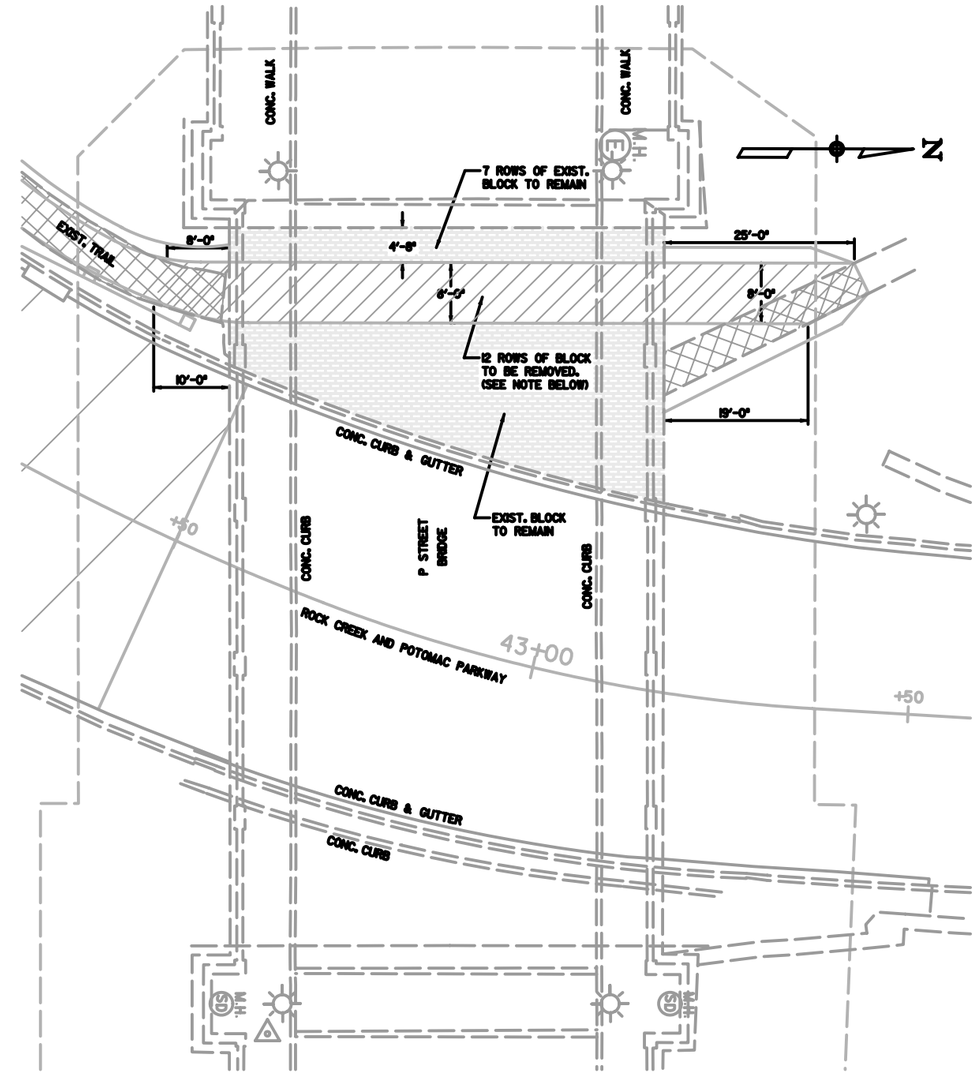

TRAIL AT 'P' STREET BRIDGE

SCALE 1"= 10'

NOTE

THE BRICK/BLOCK PAVERS SHALL BE CAREFULLY REMOVED, SALVAGED, AND DELIVERED TO THE NATIONAL PARK SERVICE'S ROCK CREEK MAINTENANCE AREA LOCATED AT 5000 GLOVER ROAD. THE CONTRACTOR SHALL CONTACT MR. O. B. GOODMAN AT 202-895-6017 TO ARRANGE FOR DELIVERY.

U.S. DEPARTMENT OF TRANSPORTATION
FEDERAL HIGHWAY ADMINISTRATION
EASTERN FEDERAL LANDS HIGHWAY DIVISION

DETAIL

DETAILS FOR TRAILS UNDER PENNSYLVANIA AVE. AND 'P' ST. BRIDGES

STANDARD APPROVED FOR USE XX/XX

REVISED: XX/XX

DETAIL E615-A

...\deE615-a.dgn 8/15/2006 10:42:46 AM

NPS	REG	STATE	PROJECT	SHEET NO.	TOTAL SHEETS
821 41920	NC	DC	PRA-ROCR 345, 204(1)	122	139

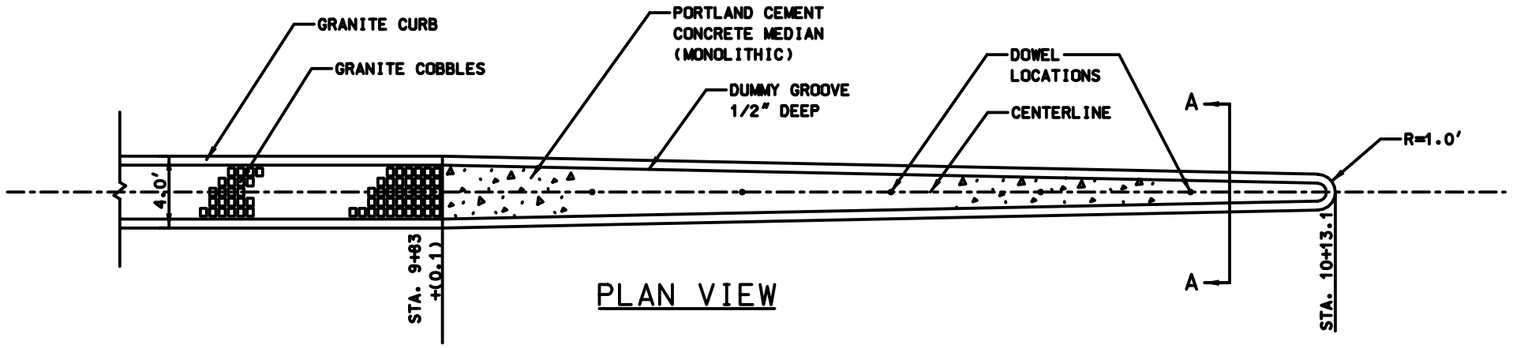

PLAN VIEW

NOTE:

After removal of the existing cement concrete median, the surface of the existing cement concrete base shall be thoroughly cleaned. Immediatly prior to pouring the new cement concrete median, a uniform layer of tack coat shall be applied to the existing cement concrete base.

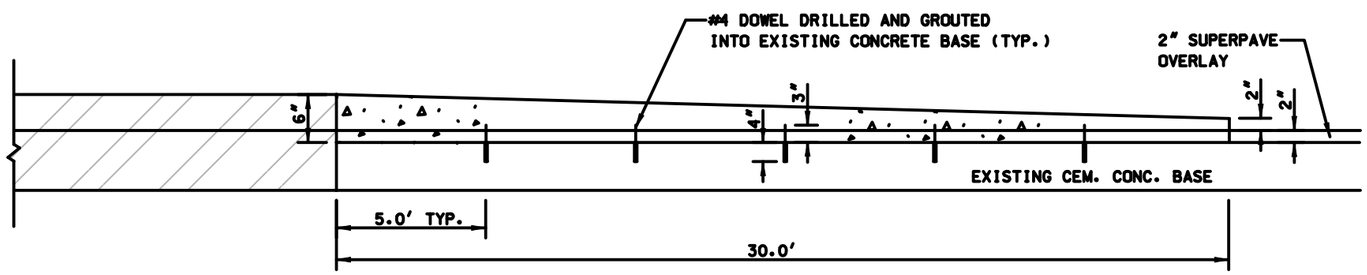

ELEVATION VIEW

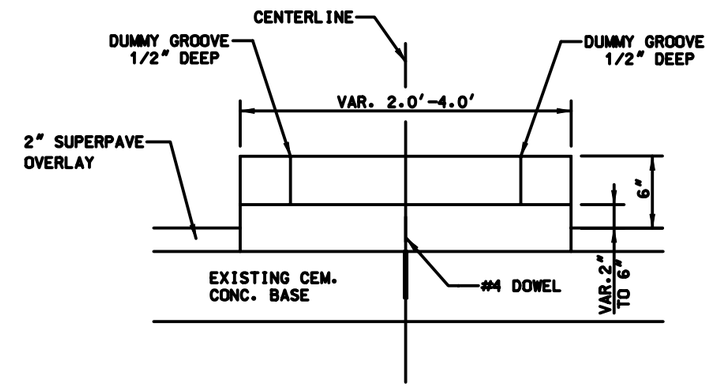

SECTION 'A'-'A'

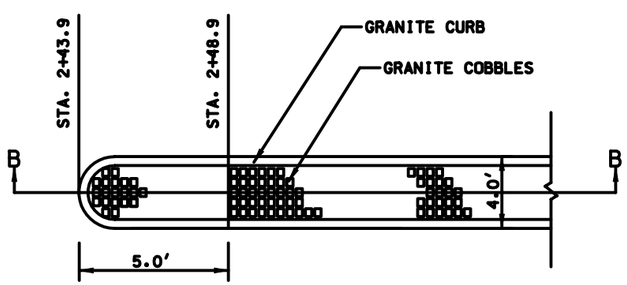

PLAN VIEW

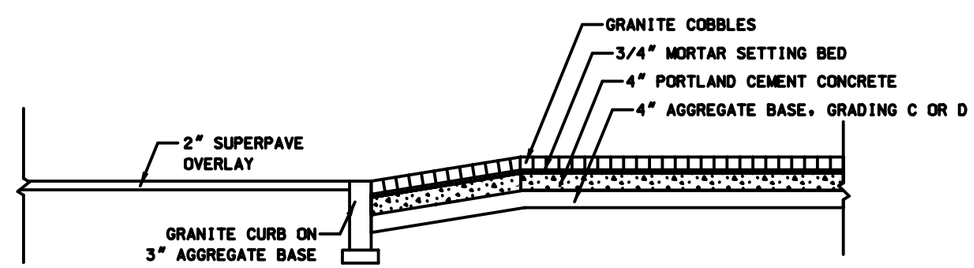

SECTION 'B'-'B'

NOT TO SCALE

U.S. DEPARTMENT OF TRANSPORTATION
FEDERAL HIGHWAY ADMINISTRATION
EASTERN FEDERAL LANDS HIGHWAY DIVISION

DETAIL

CURB TRANSITIONS FOR ENDS OF MEDIAN

DETAIL APPROVED FOR USE XX/XX	DETAIL
REVISED: XX/XX	E615-B

NPS	REG	STATE	PROJECT	SHEET NO.	TOTAL SHEETS
821 41920	NC	DC	PRA-ROCR 345, 204(1)	123	139

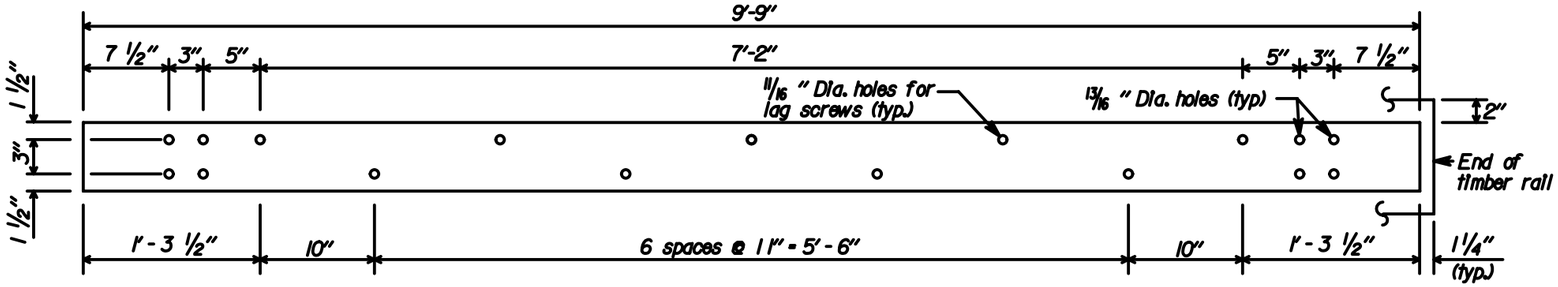

STEEL RAIL DETAIL
6" x 3/8" x 9'-9"

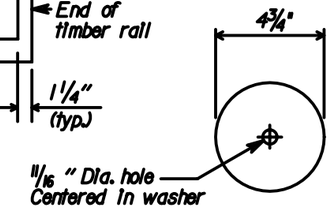

PLATE WASHER DETAIL
4 3/4" Dia. x 1/4"

Notes:

1. Use the Type A, blocked-out, system or the Type B, non-blocked-out, system as specified.
2. Use weathering steel for all structural steel and fastener hardware as specified.
3. Place a terminal section (See Standards 617-61 and 617-62) on both approach and trailing ends of barrier installations.

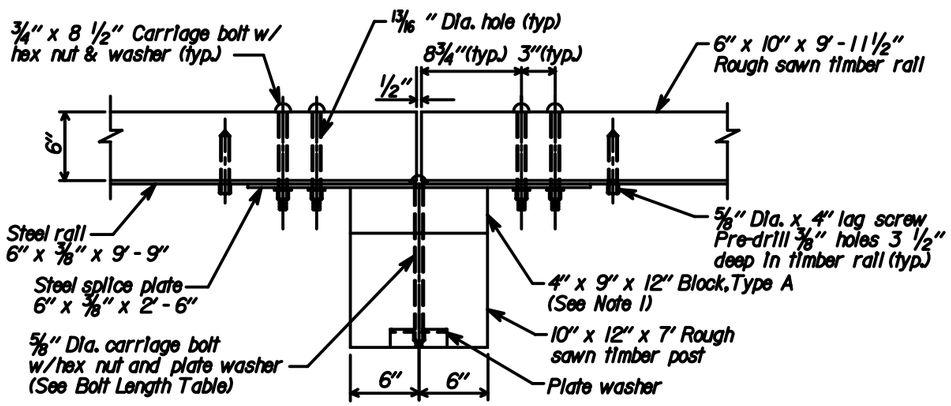

POST CONNECTION PLAN

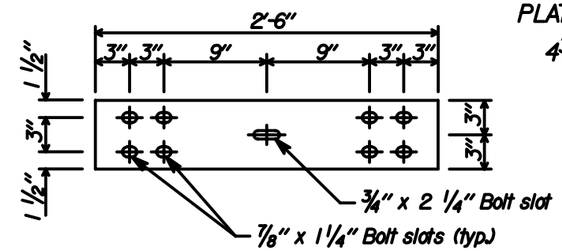

STEEL SPLICE PLATE DETAIL
6" x 3/8" x 2'-6"

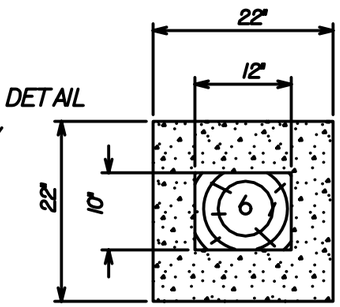

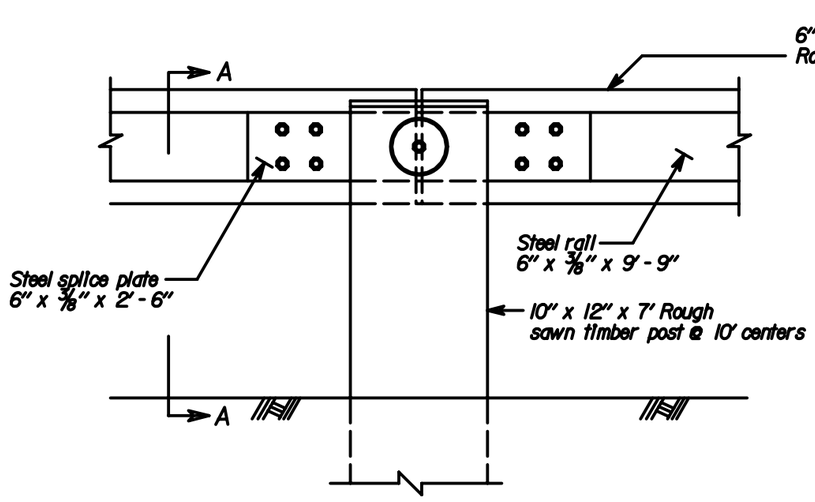

POST CONNECTION ELEVATION

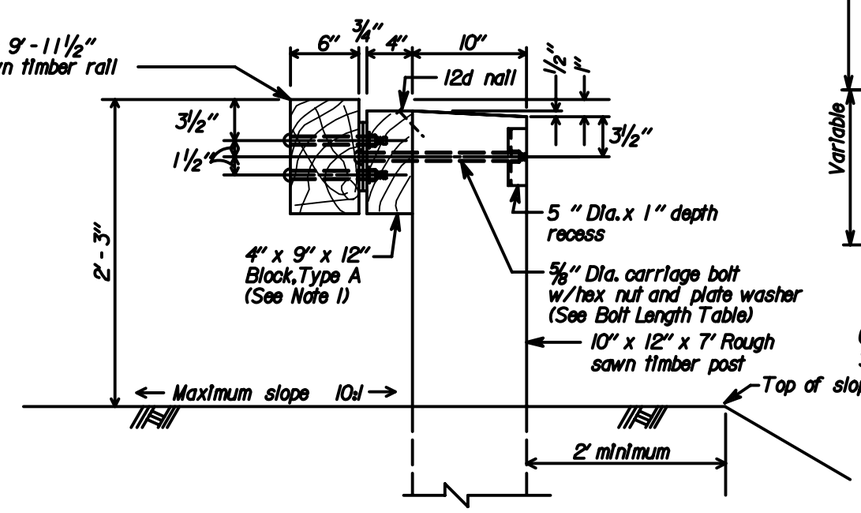

SECTION A-A

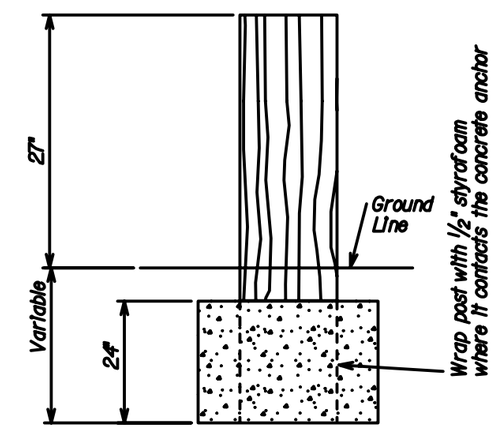

Use 25" dia. round anchor or 24" square anchor. Reduced size acceptable in solid rock.

CONCRETE ANCHOR FOR SHORT GUARDRAIL ASSEMBLY

U.S. DEPARTMENT OF TRANSPORTATION
FEDERAL HIGHWAY ADMINISTRATION
EASTERN FEDERAL LANDS HIGHWAY DIVISION

STANDARD
STEEL-BACKED TIMBER
GUARDRAIL, TYPE A & TYPE B

STANDARD APPROVED FOR USE XX/XX
REVISED: XX/XX

STANDARD
617-60

...\de617-60.dgn 8/15/2006 10:44:48 AM

NPS	REG	STATE	PROJECT	SHEET NO.	TOTAL SHEETS
821 / 41920	NC	DC	PRA-ROCR 345, 204(1)	124	139

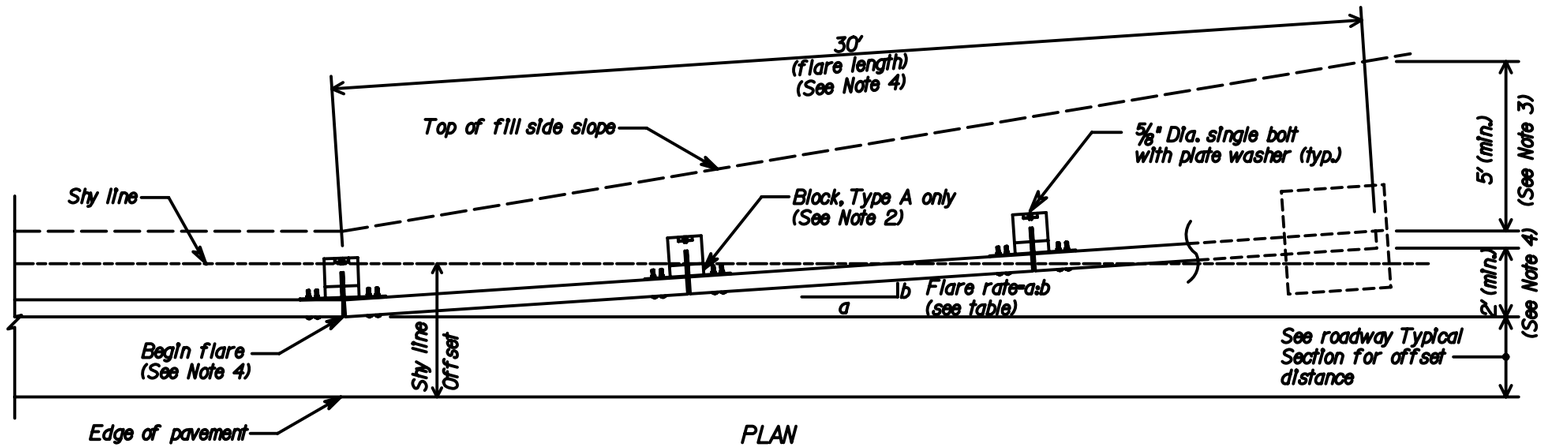

PLAN

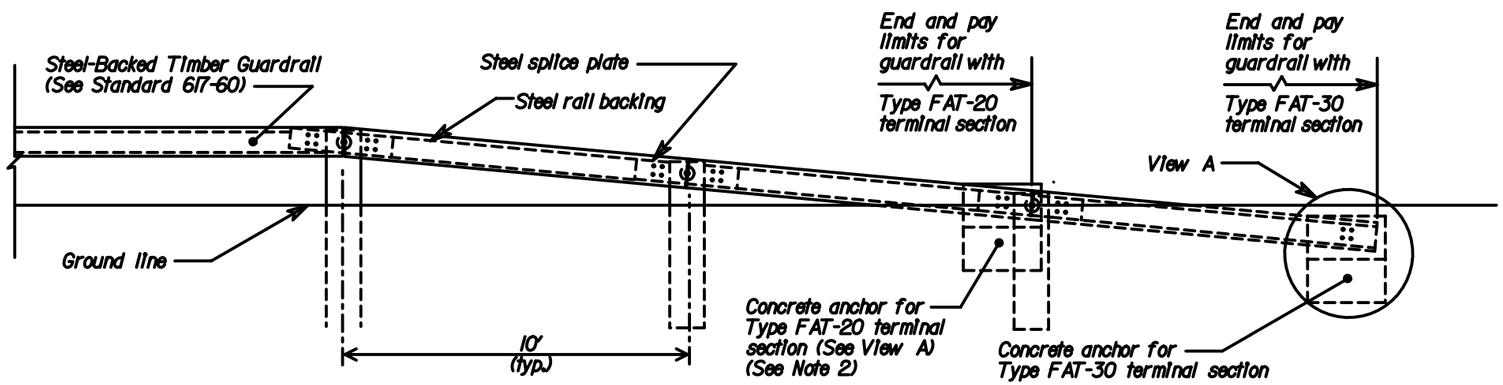

ELEVATION

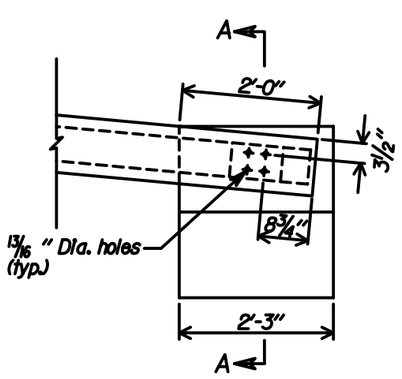

VIEW A

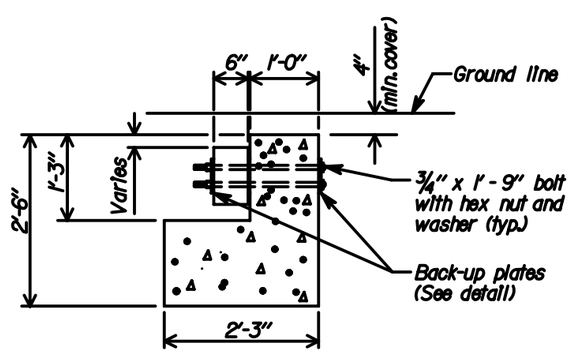

SECTION A-A

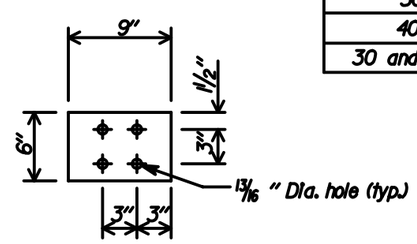

BACK-UP PLATE DETAIL
6" x 1/2" x 9"

Notes:

1. Use 30-foot long Type FAT-30 (Flared Anchored Terminal) terminal section or the 20-foot long Type FAT-20 (Flared Anchored Terminal) terminal section as specified.
2. For the Type FAT-20 terminal section, the third rail on the Type FAT-30 terminal section is deleted and the concrete anchor is relocated to the end of the second rail. See Standard 204-1, Earth Berm for Roadside Barrier Terminal Sections, for construction of the earth berm.
3. For the Type FAT-30 terminal section, extend the fill widening a minimum of 5 feet behind the guardrail, unless otherwise directed by the CO.
4. The guardrail flare shown in the plan view is the minimum length and rate required. As directed by the CO, flare the guardrail so that the terminal section is outside the clear zone. If the terminal section cannot be located outside the clear zone. It should be flared as far as practical from the road at the maximum rate indicated on the Guardrail Flare Rates table.
5. See Standard 617-60, Steel-Backed Timber Guardrail, Type A and B, for timber, structural steel, and hardware details.
6. On the Type A, blocked-out guardrail, include the blocks in the terminal section, except on the concrete anchor. For the Type B, non-blocked-out guardrail, no blocks are included.

GUARDRAIL FLARE RATES

Design Speed (mph)	Shy line offset (ft)	Flare rate inside shy line (a:b)	Flare rate outside shy line (a:b)
60	8.0	26:1	13:1
50	6.5	21:1	11:1
40	5.0	17:1	9:1
30 and less	3.5	13:1	7:1

No Scale

U.S. DEPARTMENT OF TRANSPORTATION
FEDERAL HIGHWAY ADMINISTRATION
EASTERN FEDERAL LANDS HIGHWAY DIVISION

STANDARD

STEEL-BACKED TIMBER GUARDRAIL TERMINAL SECTION, TYPE FAT-30 AND TYPE FAT-20

STANDARD APPROVED FOR USE XX/XX

REVISED: XX/XX

STANDARD 617-61

...\de617-61.dgn 8/15/2006 10:45:34 AM

NPS	REG	STATE	PROJECT	SHEET NO.	TOTAL SHEETS
821 / 41920	NC	DC	PRA-ROCR 345, 204(1)	125	140

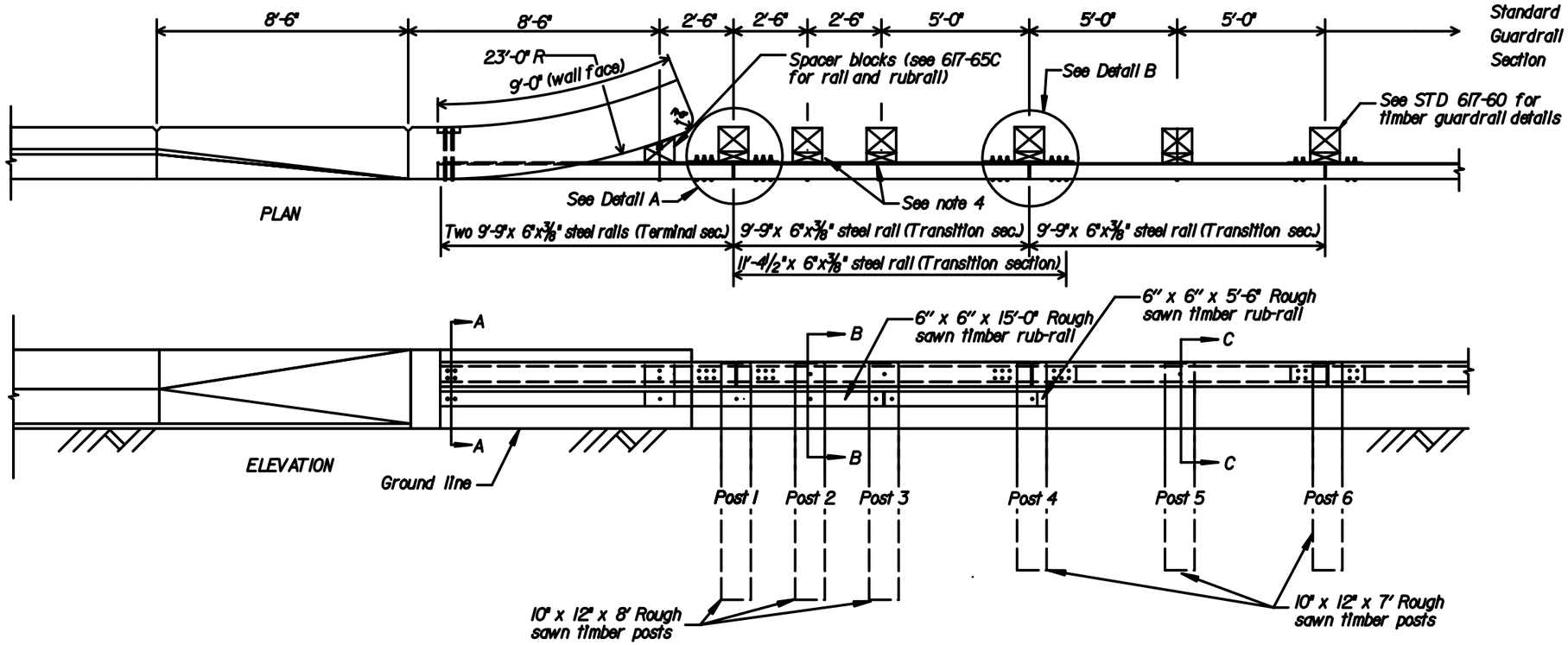

Notes:

1. See DET 617-65B for Sections A-A through C-C, steel rail layouts, and other details. See DET 617-65C for rubrail details, spacer blocks, and parapet connection details.

2. Use weathering steel for all structural steel and fastener hardware.

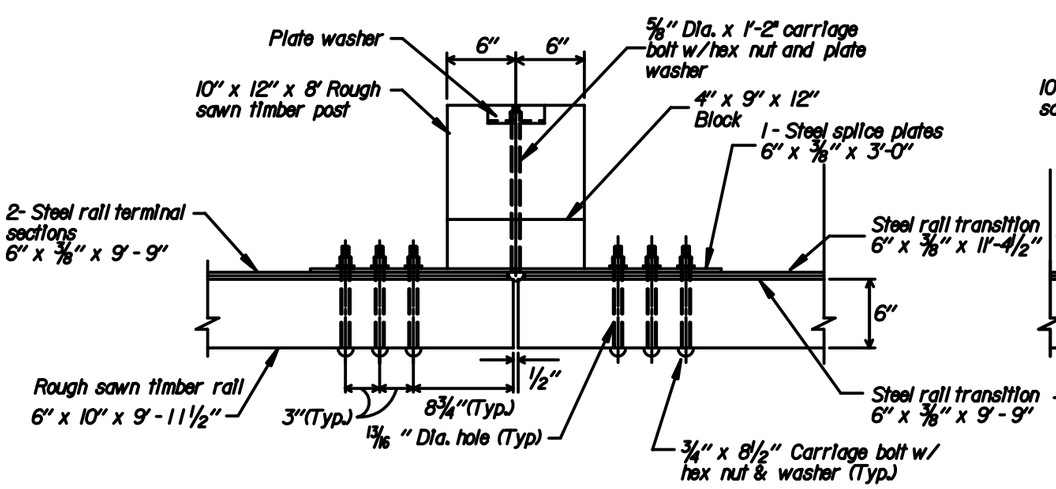

DETAIL A
POST CONNECTION PLAN

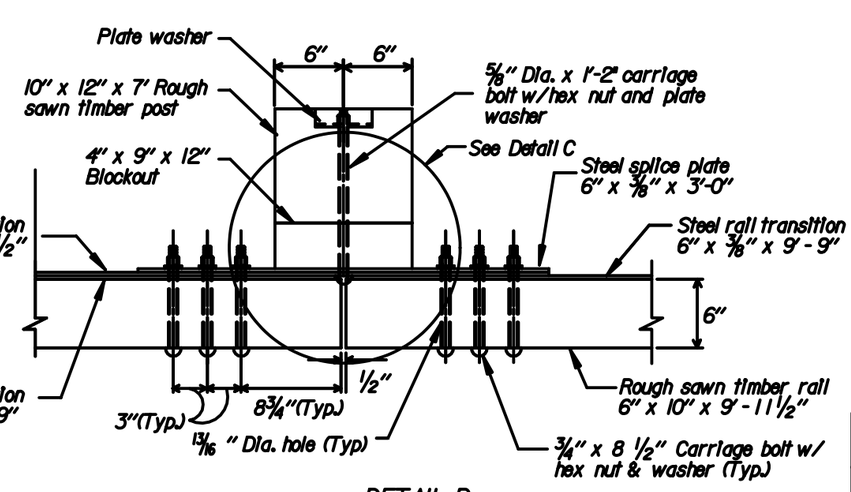

DETAIL B
POST CONNECTION PLAN

Not to scale

REVISIONS			
NO.	DESCRIPTION	BY	DATE
1	Steel transition rail REV.	R.J.S.	11/90
2	Multiple back plates	D.V.B.	12/91
3	Steel tube/schedule 40 pipe	D.V.B.	11/92
4	Increased blockout	D.V.B.	6/93
5	Corrected bolt lengths	D.V.B.	11/93
6	Added hub-rail	D.V.B.	9/94
7	New detail	D.V.B.	3/02

U.S. DEPARTMENT OF TRANSPORTATION
FEDERAL HIGHWAY ADMINISTRATION
FEDERAL LANDS HIGHWAY

DETAIL

STEEL-BACKED TIMBER GUARDRAIL BRIDGE CONNECTION

REVISED:

DETAIL 617-65A

...\de617-65A&C.dgn 8/15/2006 10:46:50 AM

NPS	REG	STATE	PROJECT	SHEET NO.	TOTAL SHEETS
821 41920	NC	DC	PRA-ROCR 345, 204(1)	126	142

Notes:

1. Pre-drill 5/8-inch holes in timber rail and 3/8-inch holes in the wood spacer block for the 5/8-inch lag screws.

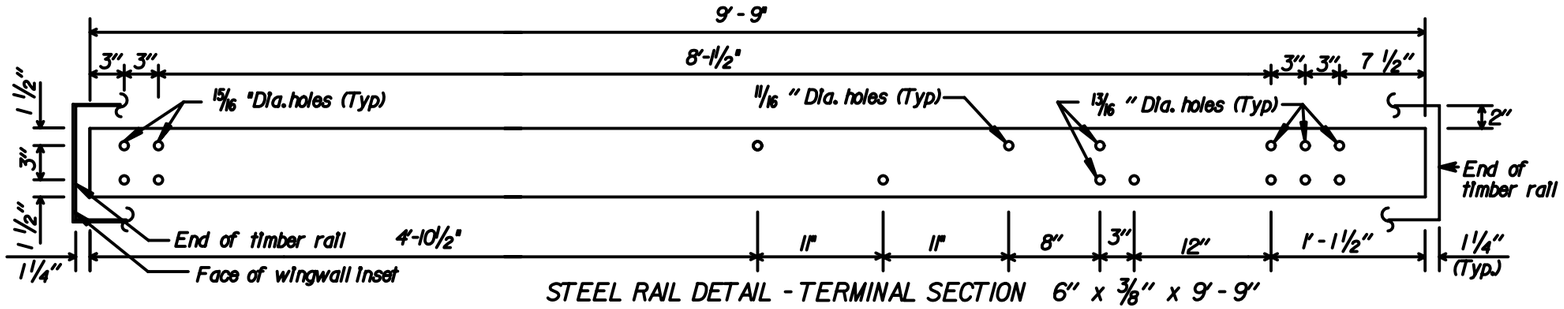

STEEL RAIL DETAIL - TERMINAL SECTION 6" x 3/8" x 9'-9"

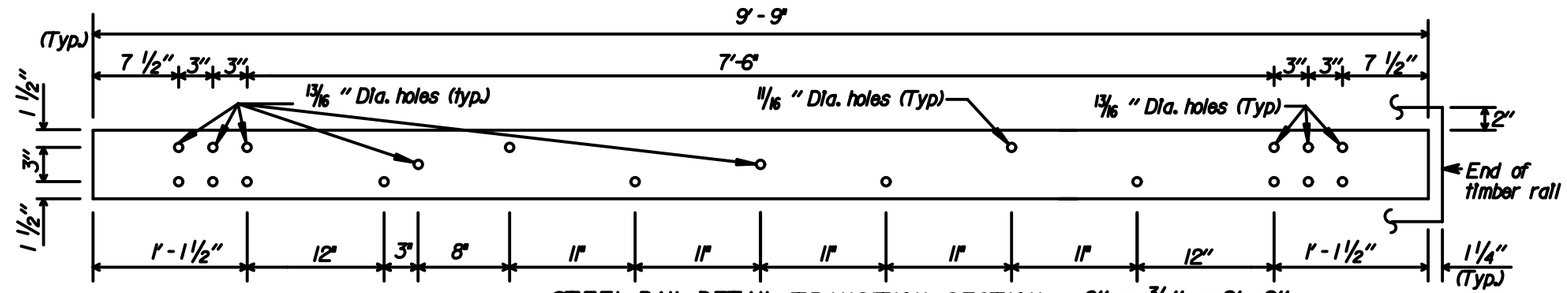

STEEL RAIL DETAIL- TRANSITION SECTION 6" x 3/8" x 9'-9"

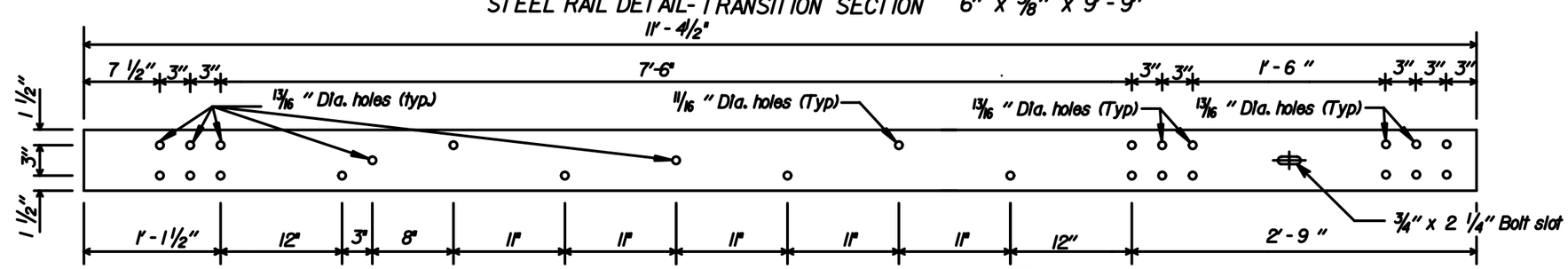

STEEL RAIL DETAIL - TRANSITION SECTION 6" x 3/8" x 11'-4 1/2"

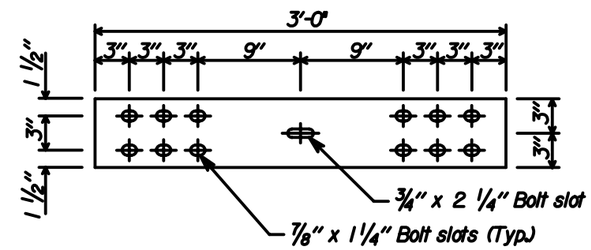

STEEL SPLICE PLATE DETAIL
6" x 3/8" x 3'-0"

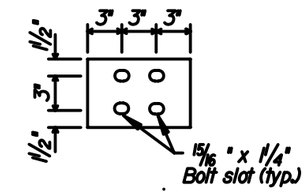

STEEL BEARING PLATE DETAIL
6" x 3/8" x 9"

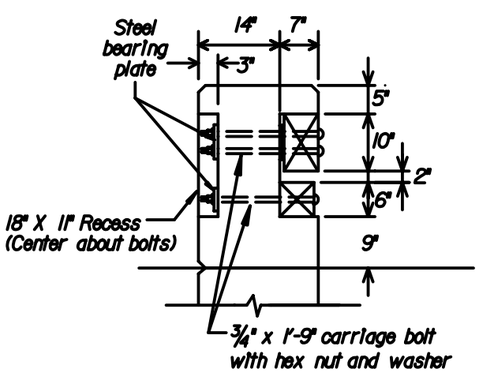

SECTION A-A

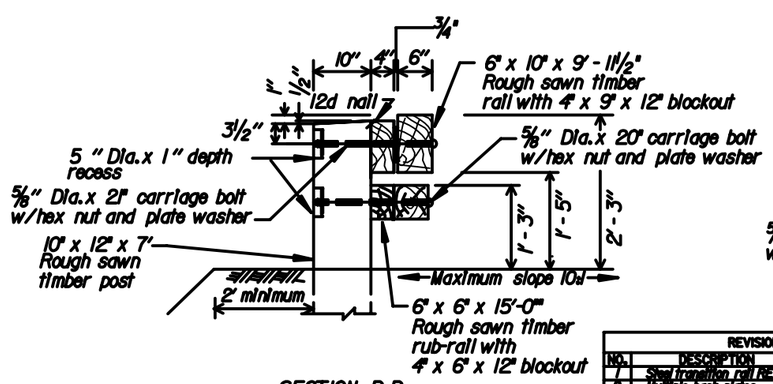

SECTION B-B

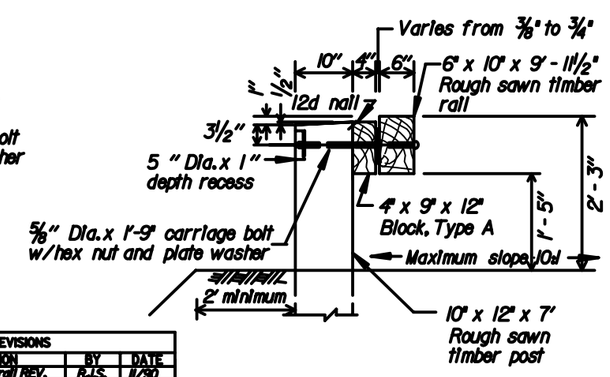

SECTION C-C

Not to scale

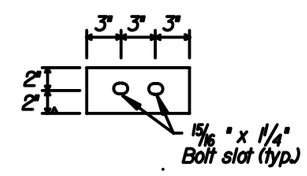

STEEL BEARING PLATE DETAIL
4" x 3/8" x 9"

REVISIONS			
NO.	DESCRIPTION	BY	DATE
1	Steel transition rail REV.	R.J.S.	11/90
2	Multiple back plates	DVB.	12/91
3	Steel tube/schedule 40 pipe	DVB.	11/92
4	Increased blockout	DVB.	6/93
5	Corrected bolt lengths	DVB.	11/93
6	Added rub-rail	DVB.	9/94
7	New detail	DVB.	9/94

U.S. DEPARTMENT OF TRANSPORTATION
FEDERAL HIGHWAY ADMINISTRATION
FEDERAL LANDS HIGHWAY

DETAIL

STEEL-BACKED TIMBER GUARDRAIL BRIDGE CONNECTION

REVISED:

DETAIL 617-65B

...\de617-65B.dgn 8/15/2006 10:47:39 AM

NPS	REG	STATE	PROJECT	SHEET NO.	TOTAL SHEETS
821 41920	NC	DC	PRA-ROCR 345, 204(1)	127	139

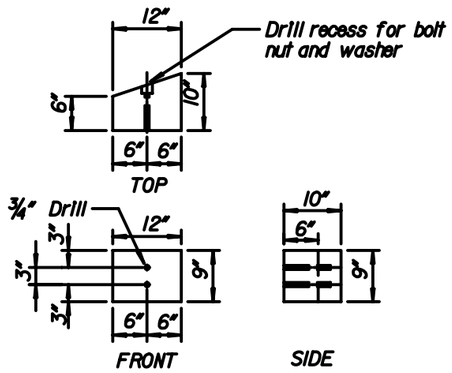

SPACER BLOCK FOR RAIL

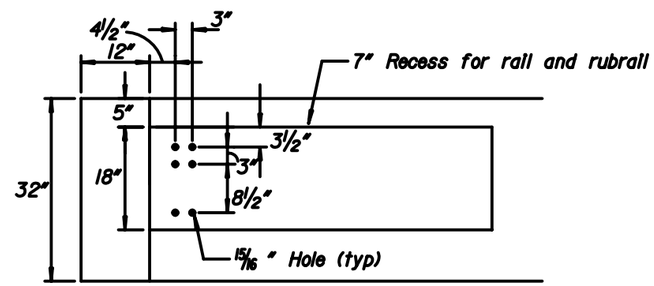

PARAPET ATTACHMENT DETAIL

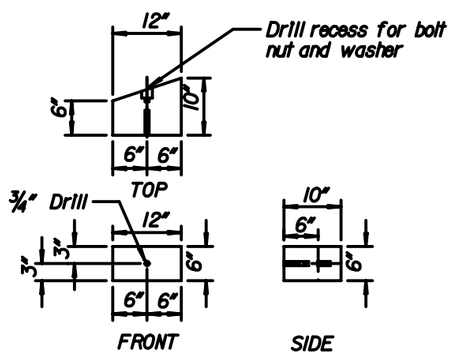

SPACER BLOCK FOR RUB-RAIL

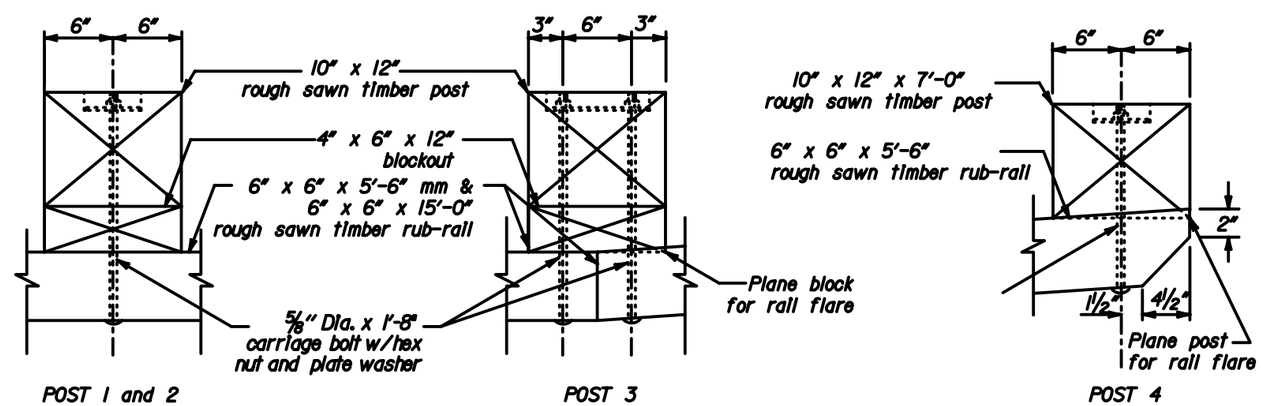

RUB-RAIL CONNECTIONS

REVISIONS			
NO.	DESCRIPTION	BY	DATE
1	Steel transition rail REV.	R.J.S.	11/90
2	Multiple bolt holes	DV/B.	10/91
3	Steel Nuts (grade 40 size	DV/B.	11/92
4	Increased blockout	DV/B.	6/93
5	Corrected bolt lengths	DV/B.	1/93
6	Added Rub-rail	DV/B.	9/94
7	New detail	DV/B.	3/02

Not to scale

U.S. DEPARTMENT OF TRANSPORTATION
FEDERAL HIGHWAY ADMINISTRATION
FEDERAL LANDS HIGHWAY

DETAIL

STEEL-BACKED TIMBER GUARDRAIL
BRIDGE CONNECTION
MISCELLANEOUS DETAILS

REVISED:

DETAIL
617-65C

...\de617-65A&C.dgn 8/15/2006 10:48:34 AM

NPS	REG	STATE	PROJECT	SHEET NO.	TOTAL SHEETS
821 41920	NC	DC	PRA-ROCR 345, 204(1)	128	139

ROADSIDE SIGN
RURAL DISTRICT
NO SHOULDER

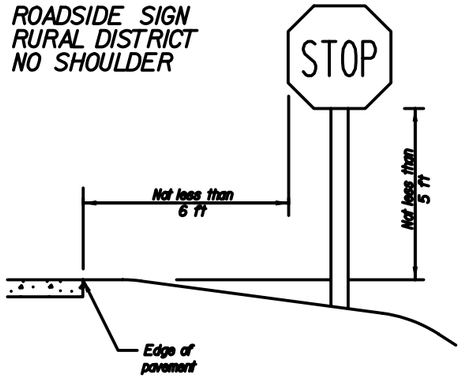

WARNING SIGN
WITH ADVISORY
SPEED PLAQUE
RURAL DISTRICT

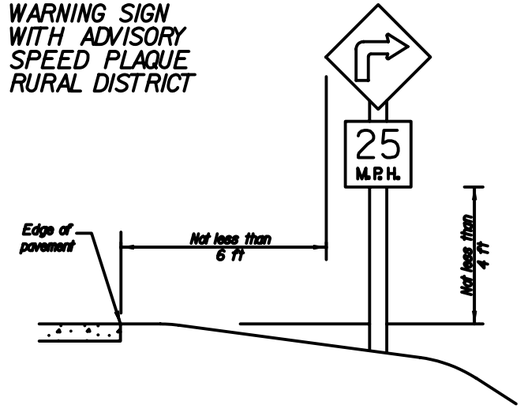

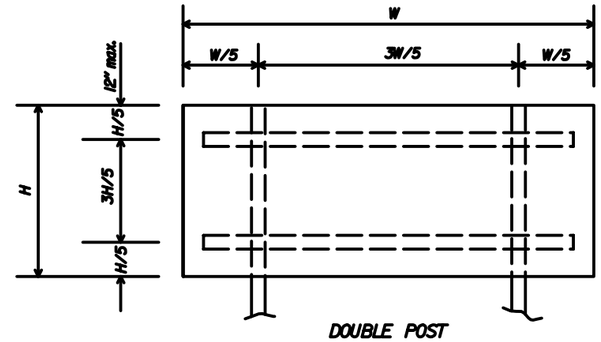

DOUBLE POST

Notes:

1. Locations and height to be in accordance with the 'Manual on Uniform Traffic Control Devices for Streets and Highways' (MUTCD), latest edition.
2. Use wood battens bolted to post at vertical spacings not to exceed 30-inches.
3. Use double posts if W is over 3 feet.
4. For sign punching details, see the blank standards in the "Standard Highway Signs" as specified in the MUTCD, latest edition.
5. For steel posts, provide a 1/4" x 6" soil plate. Use the same type of steel for the soil plate as for the post. Soil plate is not required for breakaway design.
6. For signs requiring posts sizes 6 x 6 and greater, signs are considered to be non-breakaway if multiple posts are required and posts cannot be spaced a minimum of 7 feet apart. Place non-breakaway signs outside the clearzone or shield with approved barrier. Do not place holes in posts of non-breakaway signs.
7. Depth, D, is to be in accordance with the 'Manual on Uniform Traffic Control Devices for Streets and Highways' (MUTCD), latest edition, Section 2A.21 and the AASHTO manual 'Specifications for Structural Supports for Highway Signs, Luminaires, and Traffic Signals', latest edition or as directed by the CO. D (min) is given in CHART A.

ROADSIDE SIGN
BUSINESS OR
RESIDENCE
DISTRICT

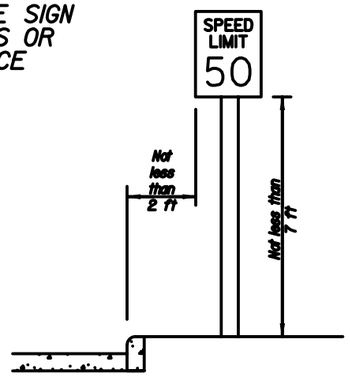

ROADSIDE SIGN
RURAL DISTRICT
WITH SHOULDER

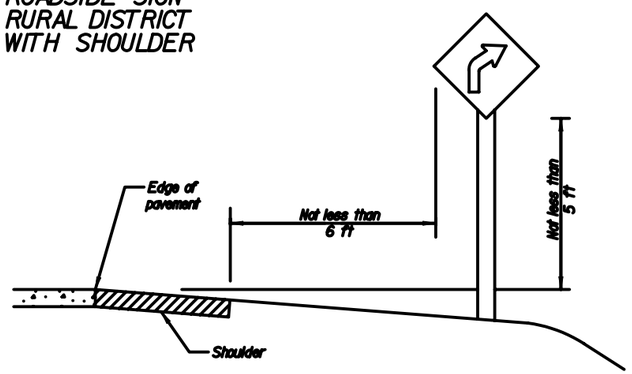

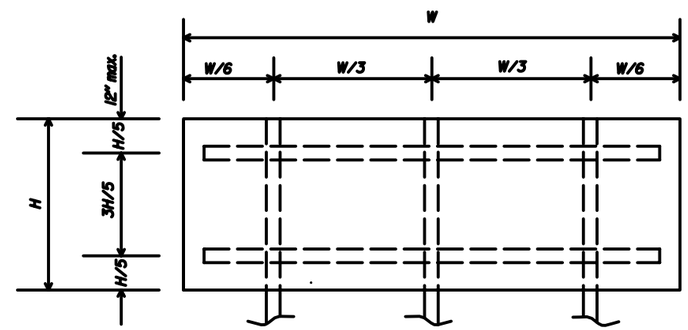

TRIPLE POST

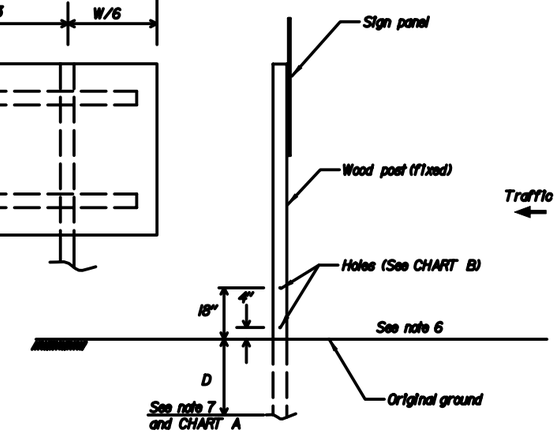

BREAKAWAY SUPPORT DETAIL

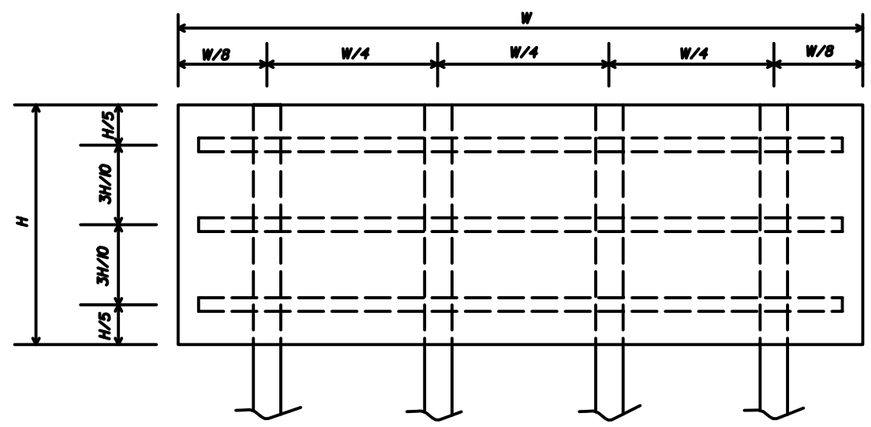

QUADRUPLE POST

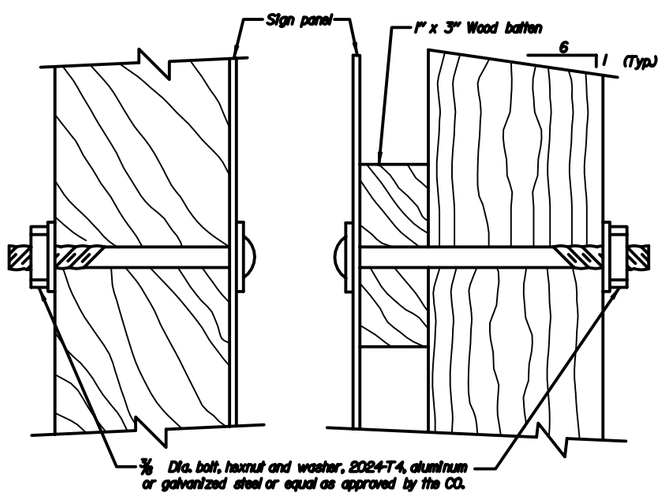

WITHOUT BATTEN

WITH BATTEN

FASTENER DETAIL

CHART B	
Post Size	Hole Diameter
4" x 4"	None Required
4" x 6"	1.5"
6" x 6"	2"
6" x 8"	3"

CHART A					
Post Size (Inch)	D (min.) *	Maximum Sign Area (sq. ft.)			
		Single Post	Double Post	Triple Post	Quadruple Post
4 x 4 (Wood)	3'	10	20		
4 x 6 (Wood)	4'	15	35	45	60
6 x 6 (Wood)	4'	20	50	75	100

*See note 7

U.S. DEPARTMENT OF TRANSPORTATION
FEDERAL HIGHWAY ADMINISTRATION
EASTERN FEDERAL LANDS HIGHWAY DIVISION

DETAIL

SIGN STRUCTURES

DETAIL APPROVED FOR USE —/——

REVISED:

DETAIL E633-1

...\deE633-1.dgn 8/15/2006 10:49:44 AM

	REG	STATE	PROJECT	SHEET NO.	TOTAL SHEETS
821 / 41920	NC	DC	PRA-ROCR 345, 204(1)	129	139

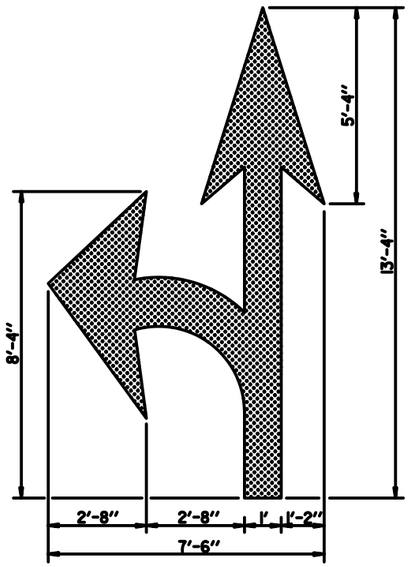

TURN AND THROUGH LANE-USE ARROW

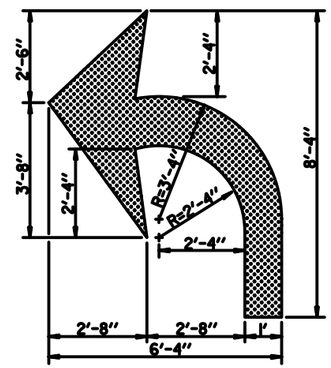

TURN LANE-USE ARROW

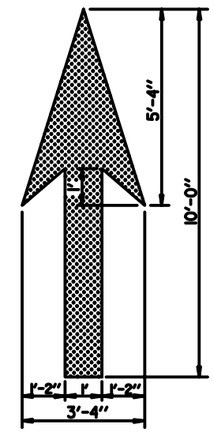

THROUGH LANE-USE ARROW

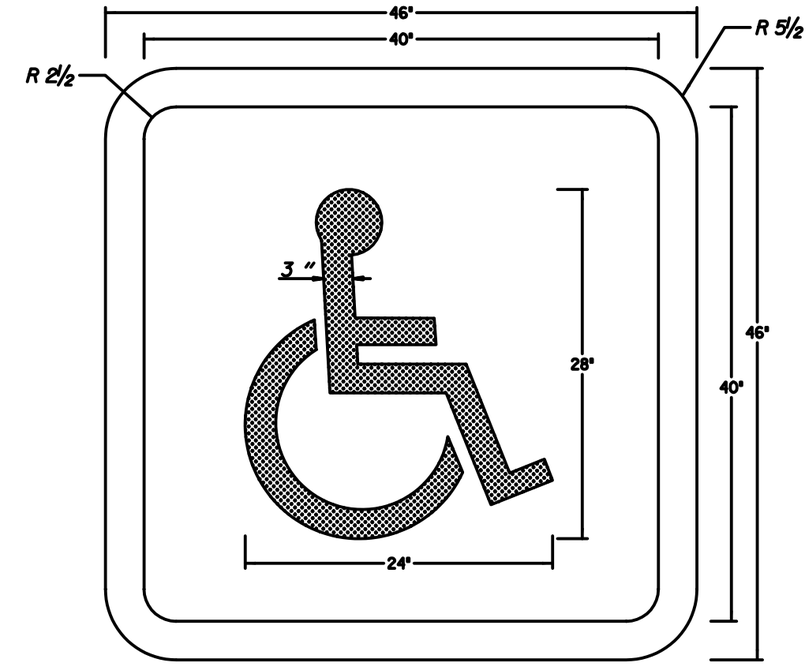

HANDICAP MARKING

*Reduce to 5'-0" for speeds under 35 mph

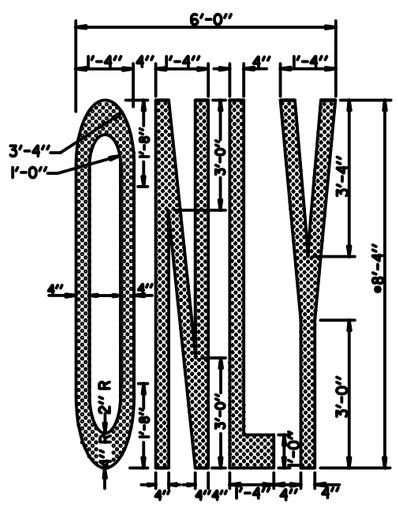

"ONLY" WORD MARKING

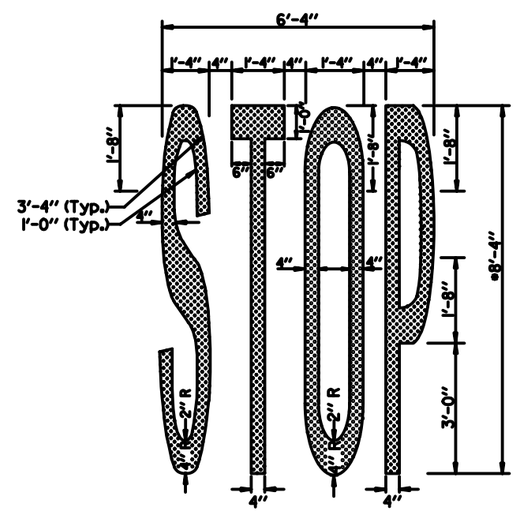

"STOP" WORD MARKIING

NOTES :

1. Place pavement word and symbol markings in accordance with the "Manual on Uniform Traffic Control Devices" (MUTCD), current edition.

2. All letters, numerals and symbols shall conform with the "Standard Alphabets for Highway Signs and Pavement Markings".

PAYMENT QUANTITIES	
ITEM	AREA (SQ. FT.)
Turn Lane-Use Arrow	16
Through Lane-Use Arrow	13
Turn and Through Lane-Use Arrow	28
Handicap Marking	16
ONLY Word Marking	18
STOP Word Marking	17

U.S. DEPARTMENT OF TRANSPORTATION
FEDERAL HIGHWAY ADMINISTRATION
EASTERN FEDERAL LANDS HIGHWAY DIVISION

DETAIL

PAVEMENT MARKINGS
SYMBOLS AND WORDS

DETAIL APPROVED FOR USE XX/XX

REVISED: 7/99

DETAIL
E634-1

...\deE634-1.dgn 8/15/2006 10:50:33 AM

NPS	REG	STATE	PROJECT	SHEET NO.	TOTAL SHEETS
821 / 41920	NC	DC	PRA-ROCR 3A5, 204(1)	130	139

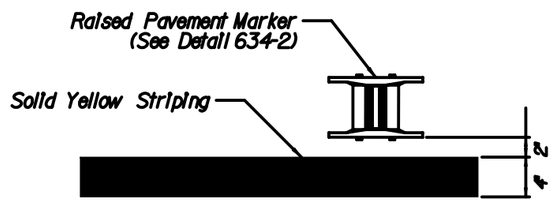

DETAIL A

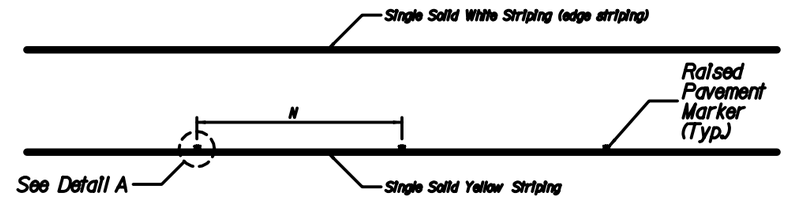

SINGLE SOLID YELLOW STRIPING WITH RAISED PAVEMENT MARKERS

NOTES:

1. All striping shall be in accordance with the Manual on Uniform Traffic Control Devices (MUTCD) latest edition.
2. Space and Install Raised Pavement Markers in accordance with the MUTCD and as shown in this detail or as directed by the CO.

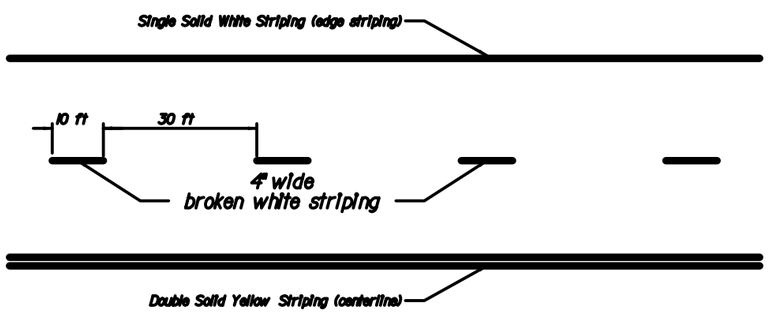

BROKEN SINGLE WHITE AND DOUBLE SOLID YELLOW STRIPING

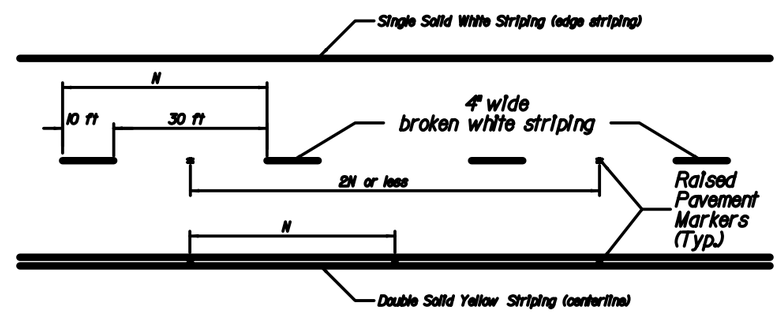

BROKEN SINGLE WHITE AND DOUBLE SOLID YELLOW STRIPING WITH RAISED PAVEMENT MARKERS

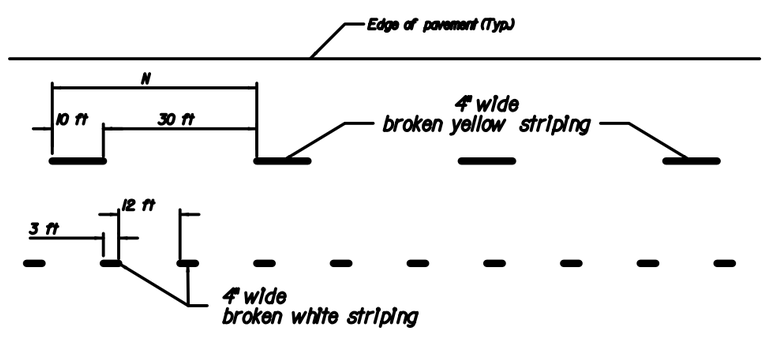

BROKEN SINGLE YELLOW AND DOTTED WHITE STRIPING

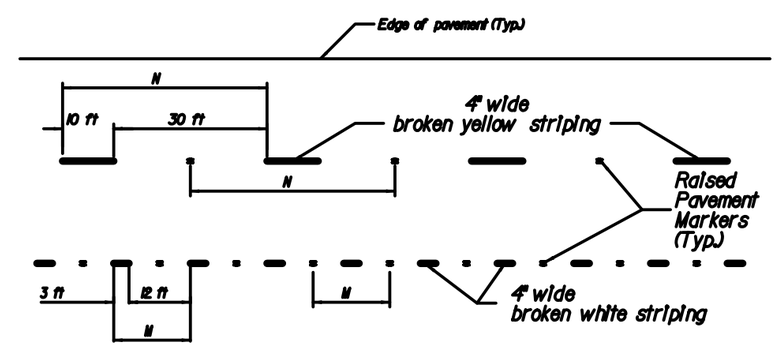

BROKEN SINGLE YELLOW AND DOTTED WHITE STRIPING WITH RAISED PAVEMENT MARKERS

U.S. DEPARTMENT OF TRANSPORTATION
FEDERAL HIGHWAY ADMINISTRATION
EASTERN FEDERAL LANDS HIGHWAY DIVISION

DETAIL

PAVEMENT MARKINGS WITH AND WITHOUT RAISED PAVEMENT MARKERS

DETAIL APPROVED FOR USE —/—

REVISED:

DETAIL E634-3

NPS	REG	STATE	PROJECT	SHEET NO.	TOTAL SHEETS
821 41920	NC	DC	FRA-ROCR 3A5, 204(1)	131	139

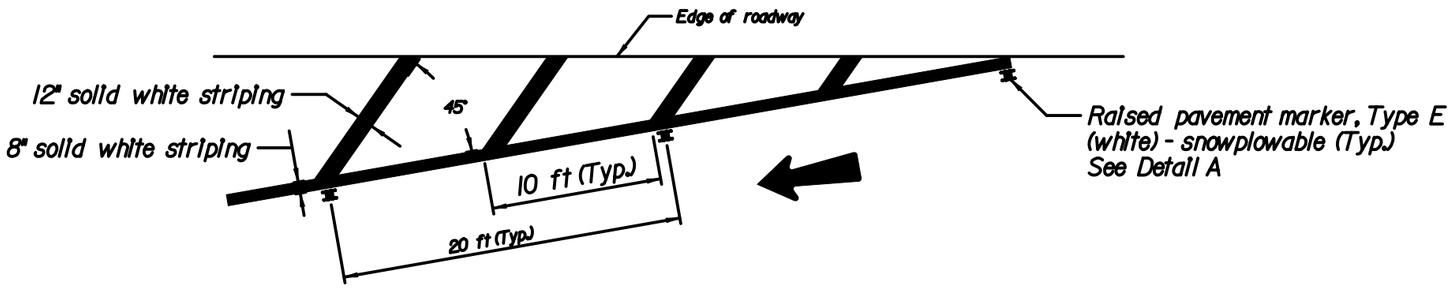

ONE-WAY TRAFFIC -- LANE SHIFT

NOTE:

All striping shall be in accordance with the Manual on Uniform Traffic Control Devices (MUTCD) latest edition.

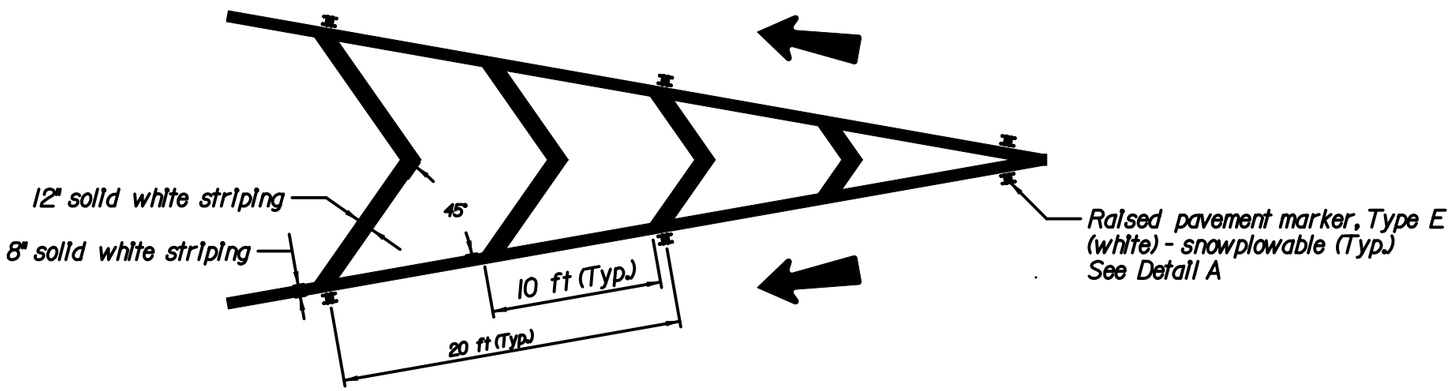

ONE-WAY TWO-LANE TRAFFIC -- LANES SEPARATE

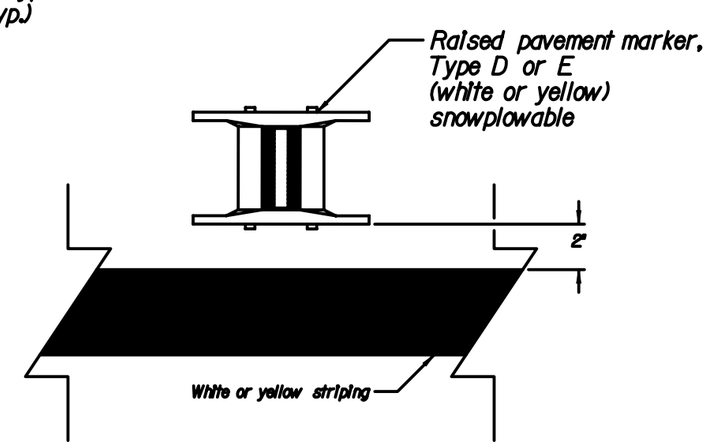

DETAIL A

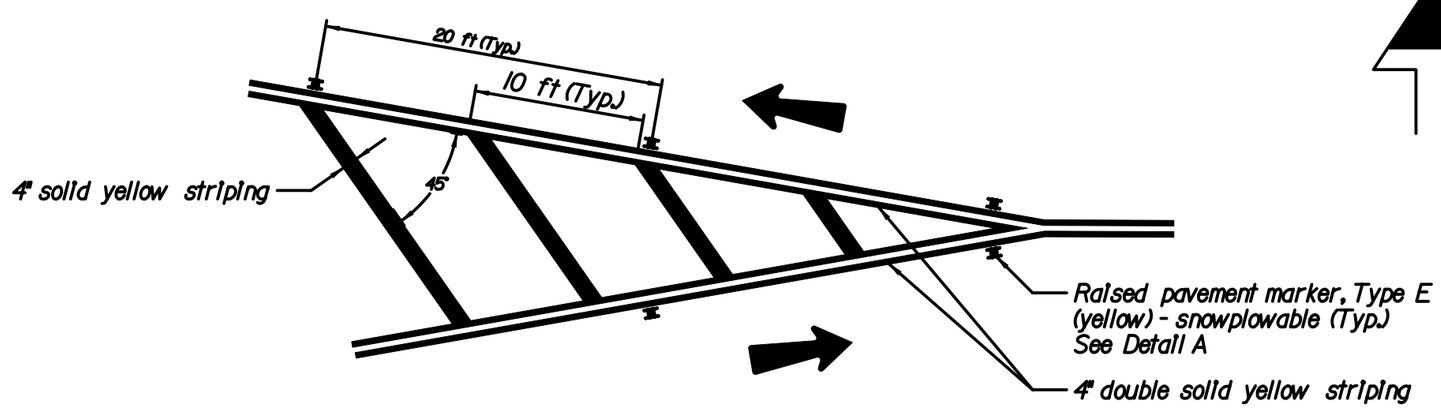

TWO-WAY TWO-LANE TRAFFIC -- LANES SEPARATE

U.S. DEPARTMENT OF TRANSPORTATION
FEDERAL HIGHWAY ADMINISTRATION
EASTERN FEDERAL LANDS HIGHWAY DIVISION

DETAIL
PAVEMENT MARKINGS
IN NEUTRAL AREAS
WITH RAISED PAVEMENT MARKERS

DETAIL APPROVED FOR USE XX/XX
REVISED: XX/XX

DETAIL
E634-4

NPS	REG	STATE	PROJECT	SHEET NO.	TOTAL SHEETS
621 / 41920	NC	DC	PRA-ROCR 345, 204(1)	132	139

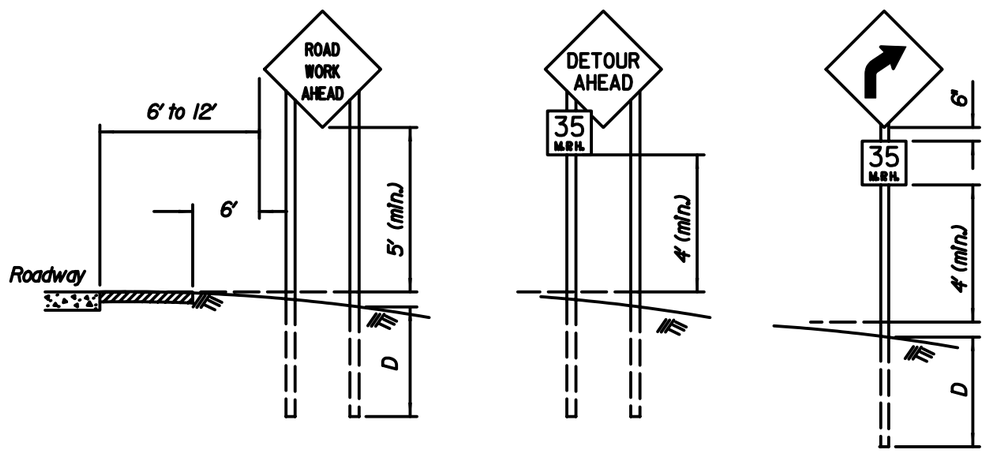

RURAL AREA

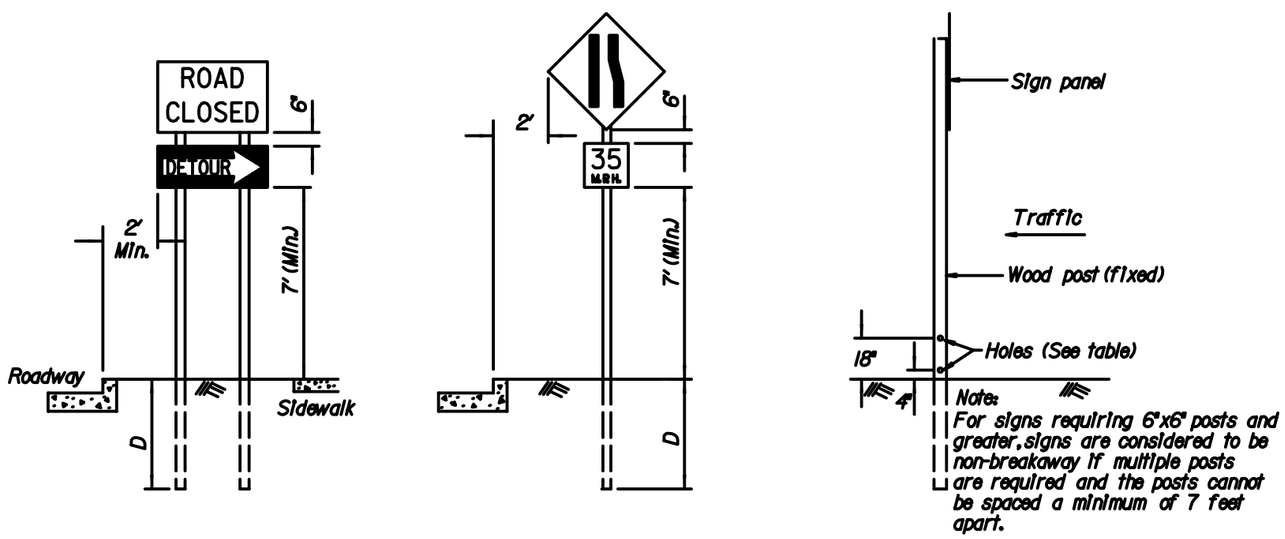

URBAN AREA

BREAKAWAY SUPPORT DETAIL
(FIXED SIGNS - 4" x 6" AND GREATER POSTS)

FIXED ROADWAY SIGNS

Post size	D	Hole Dia.	Maximum Sign Area - Sq.ft.			
			1 Post	2 Posts	3 Posts	4 Posts
4" x 4"	4'	None Req'd	10	20	X	X
4" x 6"	4'	1.5"	X	35	50	70
6" x 6"	5'	2"	X	50	75	100
6" x 8"	5'	3"	X	85	125	165

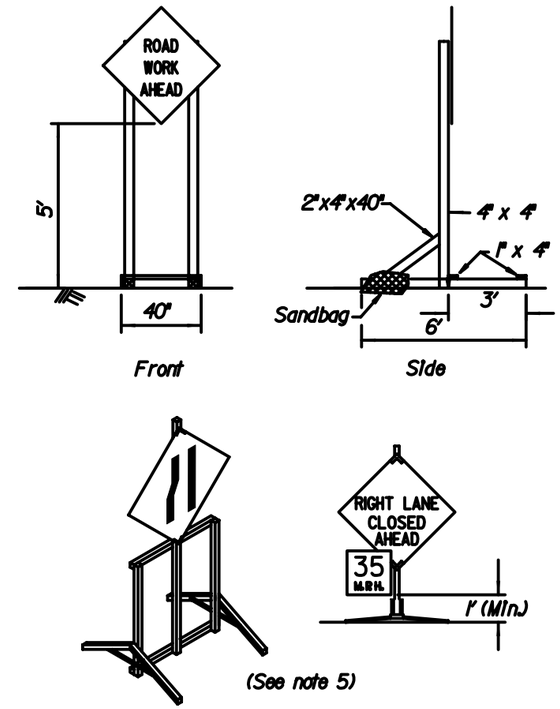

PORTABLE SIGNS

Notes:

1. Wood posts are 4"x 4" unless otherwise indicated.
2. Mount signs that are wider than 3-feet or larger than 10 square feet on double posts.
3. All lumber dimensions are nominal.
4. The Contractor may submit alternate details for portable signs, however, sign mounts hold the sign face in a vertical plane. Portable signs may be mounted lower than fixed signs when approved by the CO.
5. When parking is permitted within 200 feet of the sign, mount the sign a minimum of 7 feet above the pavement surface.
6. When approved by the CO and the Utility Company, utility poles may be used for sign mounting.
7. For posts greater than 4" x 4" see the Breakaway Support Detail. If breakaway design cannot be used, due to post spacing, the sign should be placed outside the clearzone or be shielded by barrier. Do not place holes in posts of non-breakaway signs

U.S. DEPARTMENT OF TRANSPORTATION
FEDERAL HIGHWAY ADMINISTRATION
EASTERN FEDERAL LANDS HIGHWAY DIVISION

DETAIL

CONSTRUCTION TRAFFIC CONTROL
SIGN MOUNTING

DETAIL APPROVED FOR USE XX/XX
REVISED: 08/00

DETAIL
E635-1

...\deE635-1.dgn 8/15/2006 10:53:10 AM

NPS	REG	STATE	PROJECT	SHEET NO.	TOTAL SHEETS
621 41920	NC	DC	PRA-ROCR 345, 204(1)	133	139

TYPICAL APPLICATION: LEFT LANE CLOSURE, MULTILANE UNDIVIDED

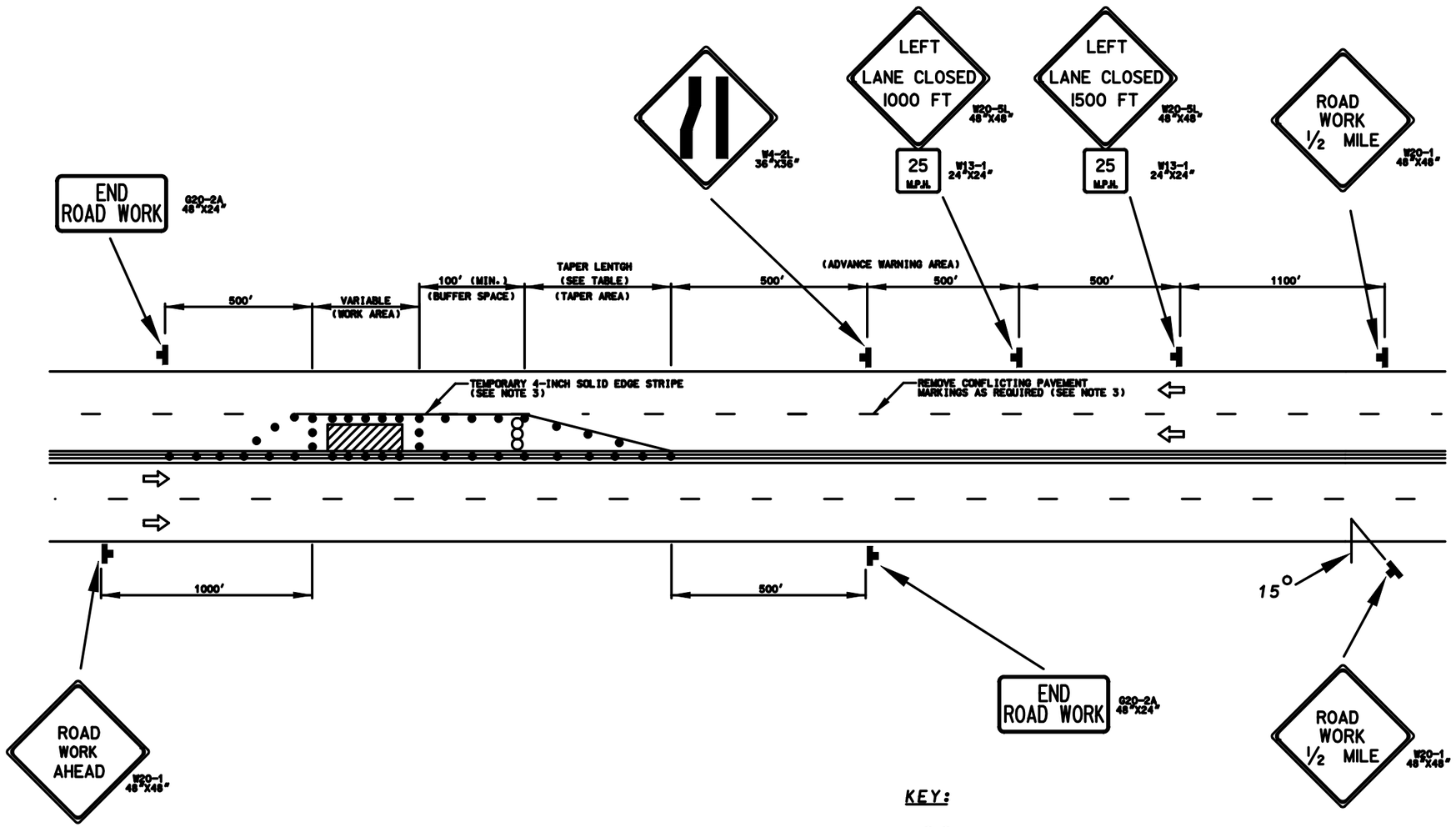

APPROACH SPEED (MPH)	MINIMUM TAPER LENGTH (FT) LANE WIDTH 10 FT.	11 FT.	12 FT.	CHANNELIZING DEVICE SPACING (FT) TAPER AREA	WORK AREA
25	105	115	125	25	50
30	150	165	180	30	60
35	205	225	245	35	70
40	270	295	320	40	80
45	450	495	540	45	90
50	500	550	600	50	100
55	550	605	660	55	100

NOTES:

1. THE ARROW PANEL SHALL BE PLACED AS CLOSE TO THE BEGINNING OF THE TAPER AS POSSIBLE WHILE REMAINING WITHIN THE TAPER.
2. FINAL LOCATION OF SIGNS AND DEVICES MAY BE CHANGED TO FIT FIELD CONDITIONS AS APPROVED BY THE CO.
3. FOR LONG TERM OPERATIONS (OPERATIONS WHERE THE LANE IS CONTINUOUSLY CLOSED FOR MORE THAN THREE DAYS) REMOVE CONFLICTING PAVEMENT MARKINGS AND PLACE EDGE LINE AS SHOWN.

KEY:

- CHANNELIZING DEVICES
- SIGN SUPPORT
- FACE OF SIGN
- DIRECTION OF TRAFFIC
- WORK SITE
- ARROW PANEL

U.S. DEPARTMENT OF TRANSPORTATION
FEDERAL HIGHWAY ADMINISTRATION
EASTERN FEDERAL LANDS HIGHWAY DIVISION

DETAIL

CONSTRUCTION TRAFFIC CONTROL
LEFT LANE CLOSURE LAYOUT

STANDARD APPROVED FOR USE XX/XX
REVISED: XX/XX

DETAIL E635-A

...\deE635-a.dgn 8/15/2006 10:54:07 AM

NPS	REG	STATE	PROJECT	SHEET NO.	TOTAL SHEETS
821 41920	NC	DC	PRA-ROCR 3A5, 204(1)	134	139

TYPICAL APPLICATION: RIGHT LANE CLOSURE, MULTILANE UNDIVIDED

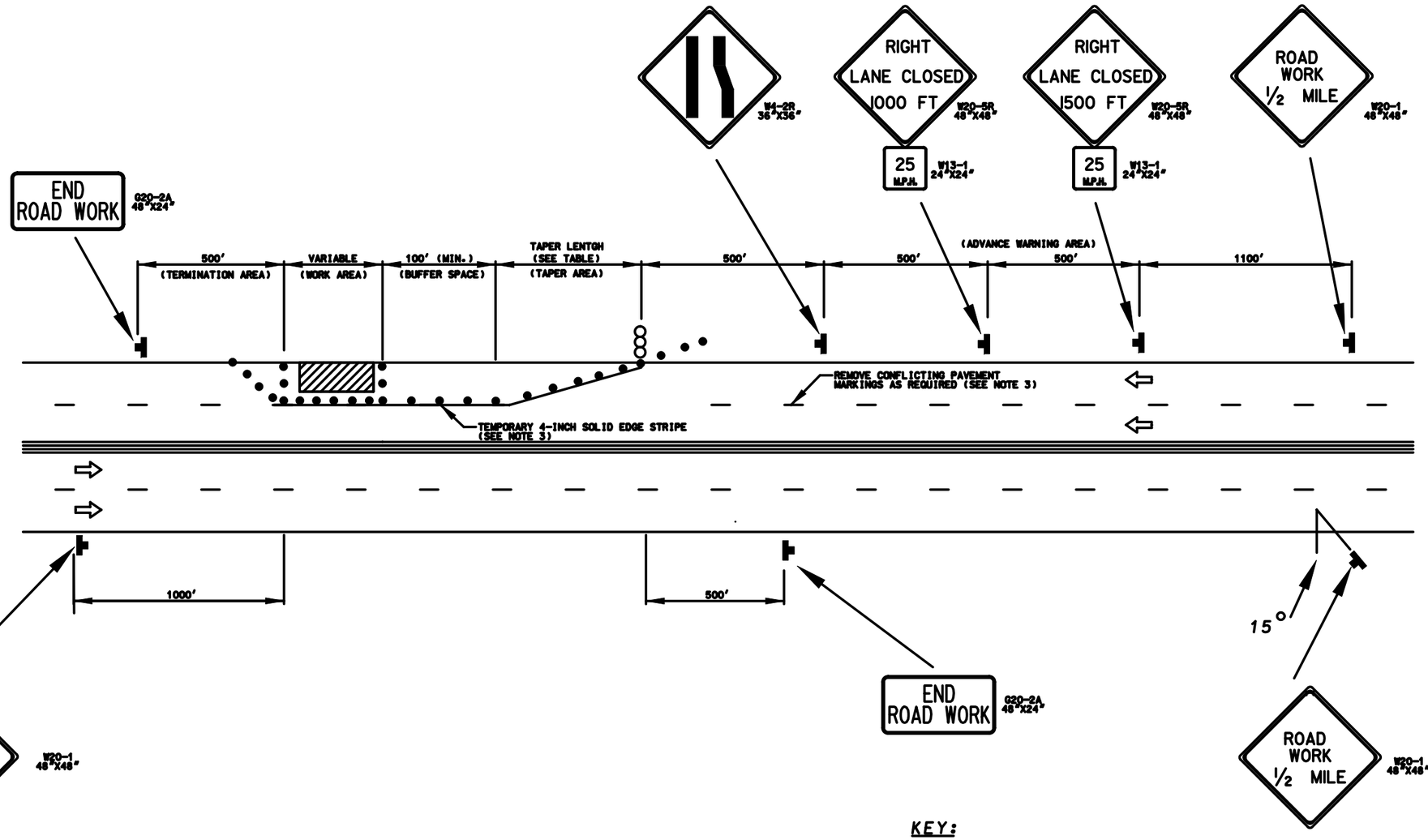

APPROACH SPEED (MPH)	MINIMUM TAPER LENGTH (FT) LANE WIDTH			CHANNELIZING DEVICE SPACING (FT)	
	10 FT.	11 FT.	12 FT.	TAPER AREA	WORK AREA
25	105	115	125	25	50
30	150	165	180	30	60
35	205	225	245	35	70
40	270	295	320	40	80
45	350	385	420	45	90
50	500	550	600	50	100
55	550	605	660	55	100

NOTES:

1. THE ARROW PANEL SHALL BE PLACED AS CLOSE TO THE BEGINNING OF THE TAPER AS POSSIBLE WHILE REMAINING WITHIN THE TAPER.
2. FINAL LOCATION OF SIGNS AND DEVICES MAY BE CHANGED TO FIT FIELD CONDITIONS AS APPROVED BY THE CO.
3. FOR LONG TERM OPERATIONS (OPERATIONS WHERE THE LANE IS CONTINUOUSLY CLOSED FOR MORE THAN THREE DAYS) REMOVE CONFLICTING PAVEMENT MARKINGS AND PLACE EDGE LINE AS SHOWN.

KEY:

- CHANNELIZING DEVICES
- SIGN SUPPORT
- FACE OF SIGN
- DIRECTION OF TRAFFIC
- WORK SITE
- ARROW PANEL

U.S. DEPARTMENT OF TRANSPORTATION
FEDERAL HIGHWAY ADMINISTRATION
EASTERN FEDERAL LANDS HIGHWAY DIVISION

DETAIL

CONSTRUCTION TRAFFIC CONTROL
RIGHT LANE CLOSURE LAYOUT

STANDARD APPROVED FOR USE XX/XX
REVISED: XX/XX

DETAIL
E635-B

...\deE635-b.dgn 8/15/2006 10:54:50 AM

MPS	REG	STATE	PROJECT	SHEET NO.	TOTAL SHEETS
821 41(82)	NC	DC	FRA-RIGR 395, 20(1)	135	139

TYPICAL APPLICATION: PARTIAL ROADWAY CLOSURE, MULTILANE UNDIVIDED

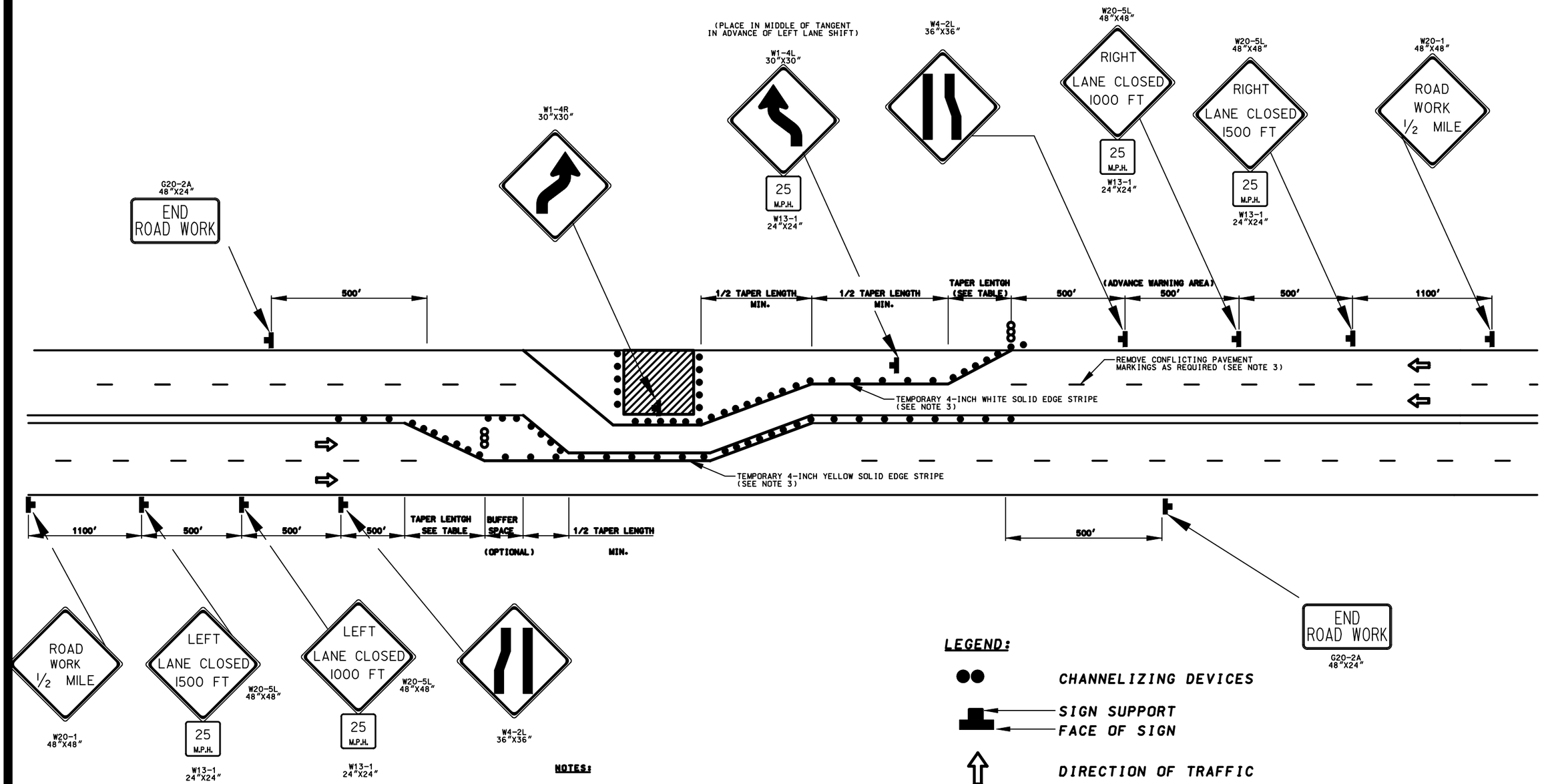

APPROACH SPEED (MPH)	MINIMUM TAPER LENGTH (FT) LANE WIDTH			CHANNELIZING DEVICE SPACING (FT)	
	10 FT.	11 FT.	12 FT.	TAPER AREA	WORK AREA
25	105	115	125	25	50
30	150	165	180	30	60
35	205	225	245	35	70
40	270	295	320	40	80
45	450	495	540	45	90
50	500	550	600	50	100
55	550	605	660	55	100

NOTES:

1. MINIMUM LANE WIDTHS THROUGHOUT CHANNELIZED DEVICES AREA SHALL BE 10 FEET.
2. THE ARROW PANEL SHALL BE PLACED AS CLOSE TO THE BEGINNING OF THE TAPER AS POSSIBLE WHILE REMAINING WITHIN THE TAPER.
3. FINAL LOCATION OF SIGNS AND DEVICES MAY BE CHANGED TO FIT FIELD CONDITIONS AS APPROVED BY THE CO.
4. FOR LONG TERM OPERATIONS (OPERATIONS WHERE THE LANE IS CONTINUOUSLY CLOSED FOR MORE THAN THREE DAYS) REMOVE CONFLICTING PAVEMENT MARKINGS AND PLACE EDGE LINE AS SHOWN.

LEGEND:

- CHANNELIZING DEVICES
- SIGN SUPPORT
- FACE OF SIGN
- DIRECTION OF TRAFFIC
- WORK SITE
- ARROW PANEL

U.S. DEPARTMENT OF TRANSPORTATION
FEDERAL HIGHWAY ADMINISTRATION
EASTERN FEDERAL LANDS HIGHWAY DIVISION

STANDARD

CONSTRUCTION TRAFFIC CONTROL
PARTIAL ROADWAY CLOSURE LAYOUT

STANDARD APPROVED FOR USE XX/XX
REVISED: XX/XX

STANDARD
E635-C

...\deE635-c.dgn 8/15/2006 10:56:14 AM

NPS	REG	STATE	PROJECT	SHEET NO.	TOTAL SHEETS
821 41920	NC	DC	PRA-ROCR 345.204(1)	136	139

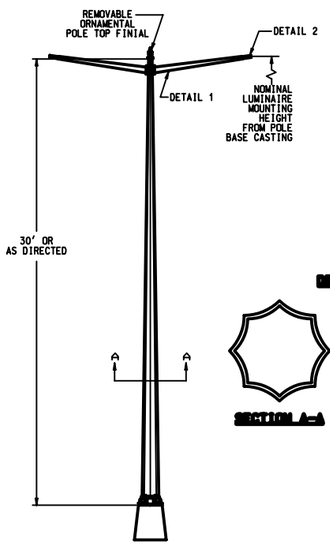

PENDANT POST

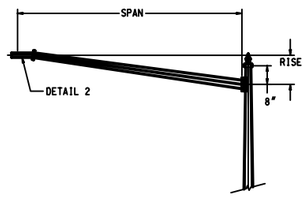

DETAIL 1 - ONE MEMBER TYPE LUMINAIRE ARM

SECTION A-A

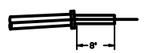

DETAIL 2 - ARM END

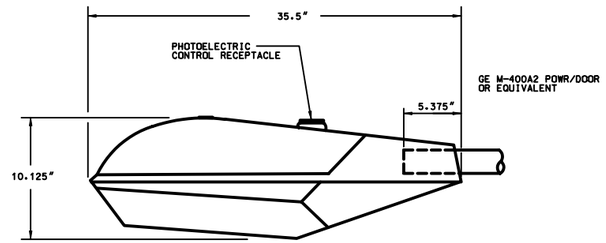

LUMINAIRE (CUT-OFF)
NTS

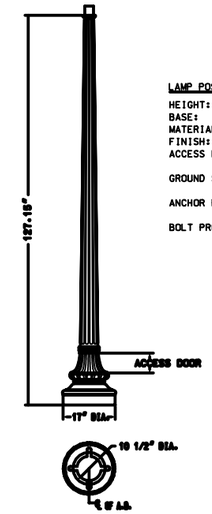

14M COLUMN AND BASE

LAMP POST SPECIFICATIONS

HEIGHT:	10'-7 5/8"
BASE:	17" DIAMETER
MATERIAL:	2 PIECE, CAST DUCTILE IRON PER A536-84 GRADE 65-45-12
FINISH:	PRIME PAINT THEN FINISH PAINT, BLACK
ACCESS DOOR:	LOCATED IN BASE SECURED WITH TAMPER PROOF HEX SOCKET SECURITY MACHINE SCREWS
GROUND STUD PROVISIONS:	DRILL AND TAP INSIDE WALL OF BASE OPPOSITE ACCESS DOOR TO ACCOMMODATE A 1/4"-20 GROUND STUD (GROUND STUD SUPPLIED BY OTHERS)
ANCHOR BOLTS:	(4) 3/4" X 24" + 3" HOOK (FULLY GALVANIZED WITH 1 GALVANIZED NUT AND 1 GALVANIZED WASHER PER BOLT)
BOLT PROJECTION:	3" REQUIRED

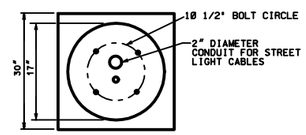

SECTION A-A
NTS

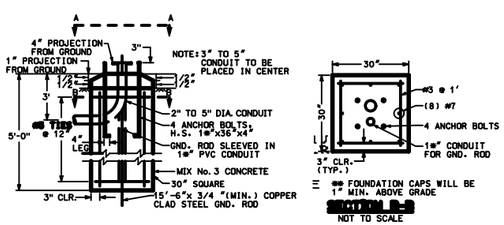

SECTION B-B
NOT TO SCALE

TYPICAL GROUND MOUNTED POLE FOUNDATION

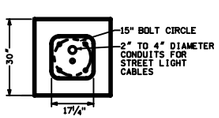

SECTION A-A
NOT TO SCALE

PENDANT POST

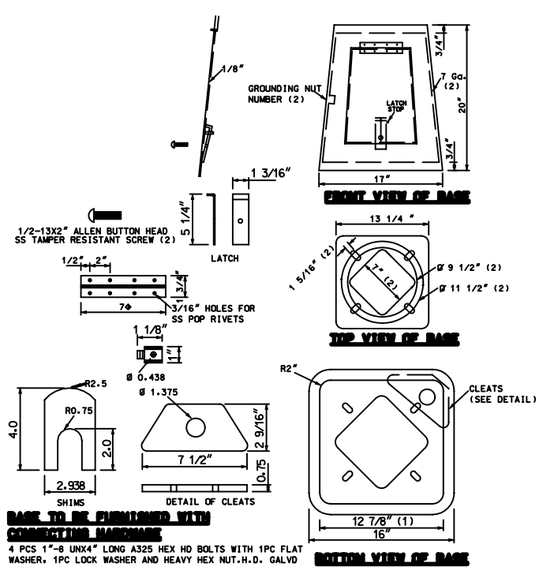

BASE TO BE FURNISHED WITH CONNECTION HARDWARE

4 PCS 1"-8 UNX4" LONG A325 HEX HD BOLTS WITH 1PC FLAT WASHER, 1PC LOCK WASHER AND HEAVY HEX NUT.H.D. GALVD

TRANSFORMER BASE

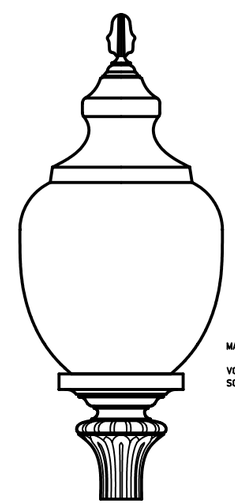

14M CASTING - 192 GLOBE WITH FINIAL

MATERIAL: 1 PIECE, CAST IRON PER A.S.T.M. A 48-83 CLASS 30
VOLTAGE: 120
SOCKET: MOGUL BASE

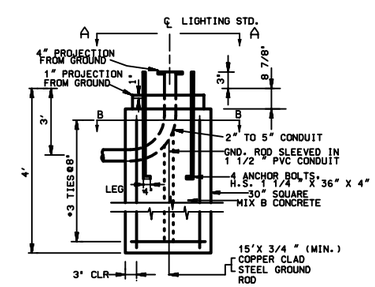

14M POLE FOUNDATION

POLE COMPONENTS

PENDANT POST 8' ARM AND T-BASE	15" BC FOUNDATION	1-400W METAL HALIDE CUTOFF LUMINAIRE		1- TWIST LOCK PHOTO CELL
#14- CAST IRON BASE, SHAFT, AND CASING	10.5" BC FOUNDATION	1-150W METAL HALIDE CONV. KIT	1- FP 192 D.C. GLOBE	1- BUTTON TYPE PHOTO CELL

U.S. DEPARTMENT OF TRANSPORTATION
FEDERAL HIGHWAY ADMINISTRATION
EASTERN FEDERAL LANDS HIGHWAY DIVISION

DETAIL

LIGHT POLE AND BASE DETAILS

DETAIL APPROVED FOR USE XX/XX
REVISED: XX/XX

DETAIL E636-A

...\deE636-a.dgn 8/15/2006 10:57:22 AM

NPS	REG	STATE	PROJECT	SHEET NO.	TOTAL SHEETS
821 41920	NC	DC	PRA-ROCR 3A5.204(1)	137	139

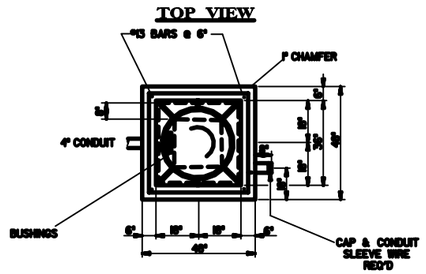

COVER DETAIL

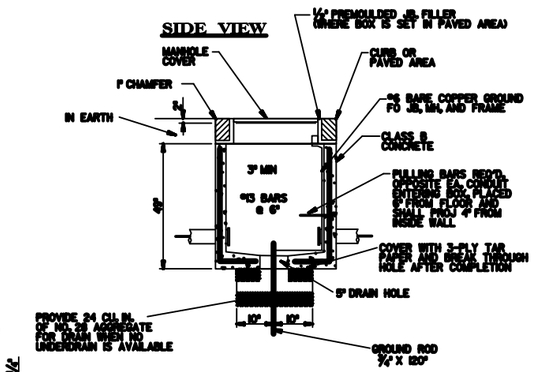

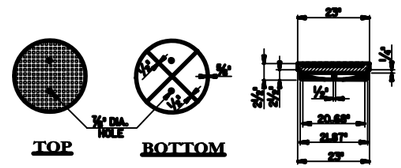

MANHOLE DETAILS

FOR GRADED AND SHOULDER AREAS

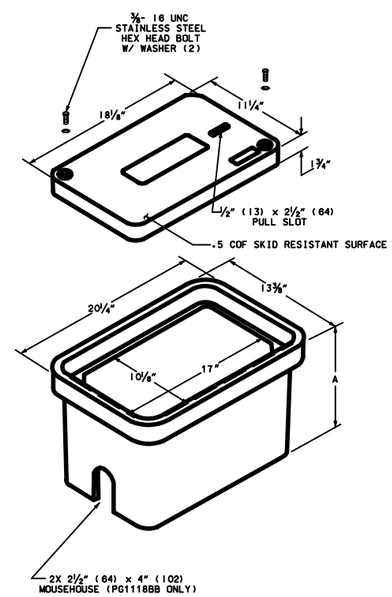

JUNCTION BOX DETAILS

NTS

U.S. DEPARTMENT OF TRANSPORTATION
FEDERAL HIGHWAY ADMINISTRATION
EASTERN FEDERAL LANDS HIGHWAY DIVISION

DETAIL

ELECTRICAL MANHOLE AND JUNCTION BOX DETAILS

DETAIL APPROVED FOR USE XX/XX

REVISED: XX/XX

DETAIL E636-B

NPS	REG	STATE	PROJECT	SHEET NO.	TOTAL SHEETS
821 41920	NC	DC	PRA-ROCR 3A5.204(1)	138	139

PLAN VIEW

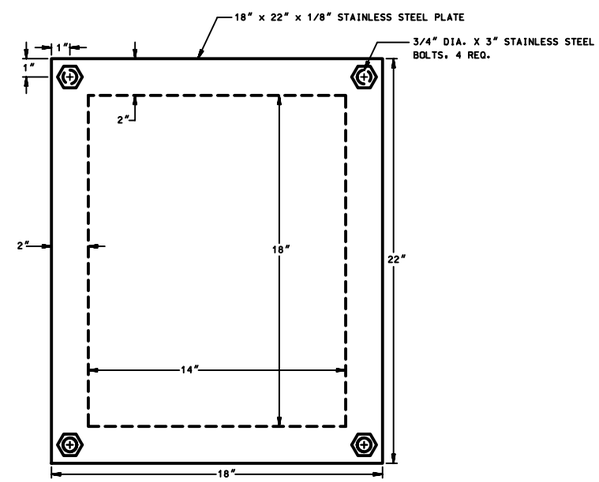

SECTION A-A

U.S. DEPARTMENT OF TRANSPORTATION
FEDERAL HIGHWAY ADMINISTRATION
EASTERN FEDERAL LANDS HIGHWAY DIVISION

DETAIL
WALL PLATE COVER FOR UNDERPASS LIGHT REMOVAL

DETAIL APPROVED FOR USE XX/XX

REVISED: XX/XX

DETAIL
E636-C

...\deE636-c.dgn 8/15/2006 10:59:12 AM

REVISION								
DESCRIPTION	DATE	COR.	CHK.	APP.	APP.	APP.	APP.	APP.

NPS	REG	STATE	PROJECT	SHEET NO.	TOTAL SHEETS
821 41920	NC	DC	PRA-ROCR 3A5.204(1)	139	139

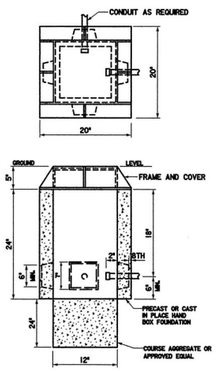

HAND BOX INSTALLATION

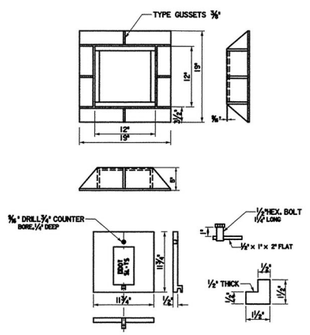

HAND BOX FRAME AND COVER

NOTE: [REPRODUCED FROM SHEET 10/22 OF DDOT SIGNAL DETAILS]

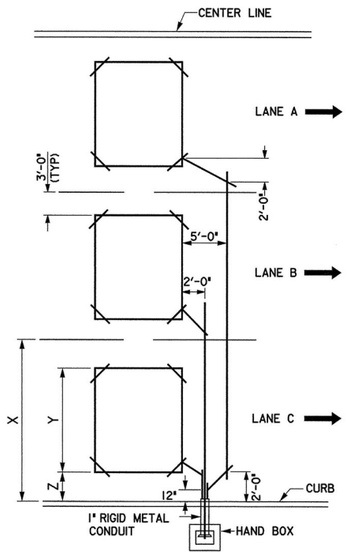

LOOP FEEDER LAYOUT

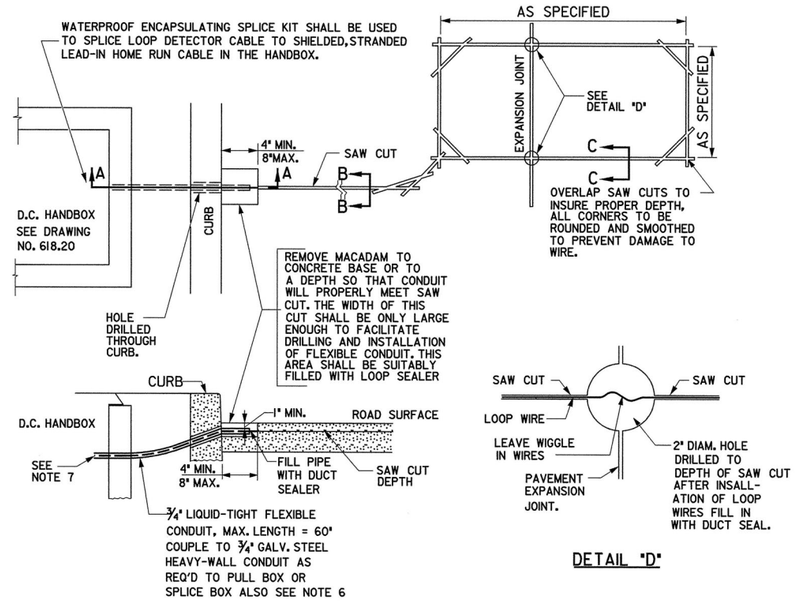

SECTION A2-A2

DETAIL "D"

1. FLEXIBLE CONDUIT SHALL BE INSTALLED SO THAT IT RECEIVES THE LOOP WIRES ON A STRAIGHT ANGLE LOOP WIRES SHALL BE INSTALLED IN BOTTOM OF SAW CUT.)
2. THE HOLE TO RECEIVE THE FLEXIBLE CONDUIT SHALL BE SUFFICIENTLY BELOW THE ROADWAY SURFACE SO THAT THERE IS A MIN. OF ONE-INCH COVER ON TOP OF THE FLEXIBLE CONDUIT WHEN INSTALLED.
3. IF THERE IS INSUFFICIENT MACADAM COVER TO ACCOMPLISH THE ABOVE, A PORTION OF THE CONCRETE BASE SHALL BE REMOVED BEFORE DRILLING.
4. WHEN THERE IS A CONCRETE ROAD AT THE CURB, A SUFFICIENT AMOUNT OF THE ROADWAY SHALL BE REMOVED BEFORE DRILLING THROUGH CURB.
5. IN NO CASE SHALL A LARGE PORTION OF THE ROADWAY SURFACE BE REMOVED. THIS REMOVED PORTION OF ROADWAY SHALL BE FILLED WITH LOOP SEALER.
6. WHENEVER GRANITE STONE CURB IS ENCOUNTERED, NO DRILLING WILL BE PERMITTED INSTEAD USE CURB EXPANSION JOINTS, AS DIRECTED BY ENGINEER.
7. THE START OF THE WIRE LOOP SHALL BE MARKED WITH COLORED TAPE IN THE HAND BOX, AND SHALL BE CONNECTED TO THE BLACK WIRE OF THE SHIELDED HOME RUN CABLE TO THE CONTROLLER.
8. LOOP DETECTOR CABLE SLOT SEALANT AND AMPLIFIERS (IF REQUIRED) SHALL CONFORM WITH D.C. SPECIFICATIONS AS CONTAINED IN PROJECT SPECIAL PROVISIONS.
9. LOOP DETECTOR CONTINUITY SHALL BE ASCERTAINED AFTER INSTALLATION. LOOPS FAILING THE MEGGAR TEST WILL BE RE-CUT UNTIL THEY PASS THE TEST.
10. WHEN APPLICABLE LOOP DETECTORS SHALL BE CUT IN THE PCC BASE BEFORE ASPHALT IS LAID. NOTE 9 SHALL BE SATISFIED BEFORE AND AFTER THE SURFACE COURSE IS APPLIED. LOOPS FAILING MEGGAR TEST SHALL BE RECUT PREFERRABLY IN THE PCC BASE BUT IN THE SURFACE COURSE ONLY WHEN NECESSARY.

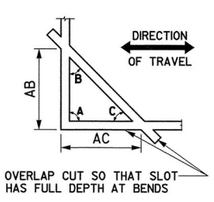

NOTES:

1) FOR ANY ANGLE A, ANGLE B SHALL ALWAYS BE EQUAL TO ANGLE C. THIS IS DONE BY ENSURING THAT DISTANCE AB ALWAYS EQUALS DISTANCE AC.

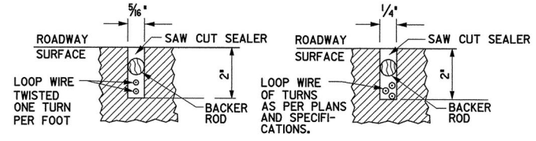

SECTION B-B

SECTION C-C

NOTE: [ADAPTED FROM SHEET 10/22 OF DDOT SIGNAL DETAILS]

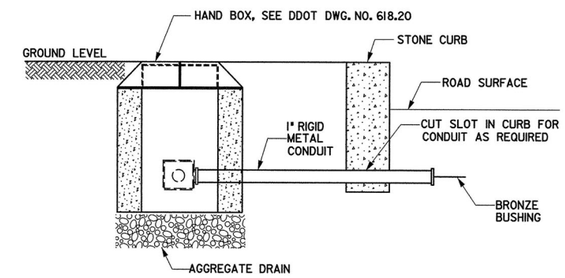

SECTION A1-A1

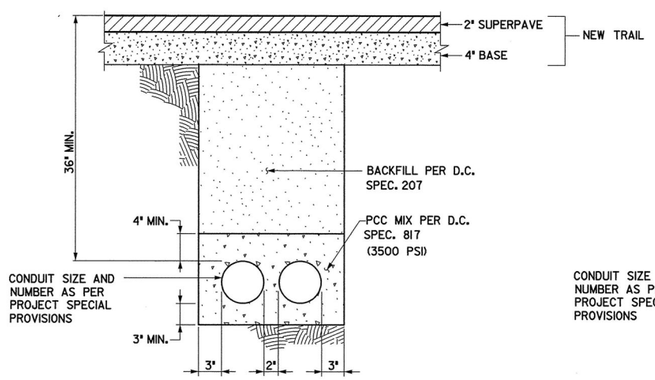

TYPICAL CONDUIT INSTALLATION UNDER ASPHALT TRAIL

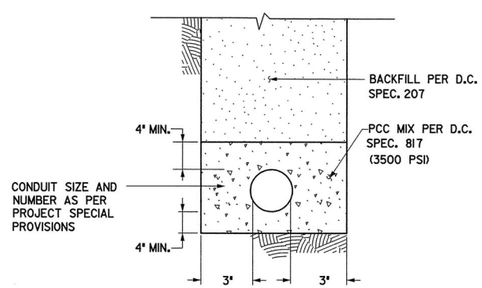

OTHER TYPICAL ARRANGEMENT

INSTALLATION NOTES:

1. ALL CONDUIT SHALL BE COMPOSED OF POLYVINYLCHLORIDE (PVC) MATERIAL, UNLESS OTHERWISE SPECIFIED IN PROJECT PLANS.
2. ALL CONDUIT SHALL CONFORM WITH THE PROVISIONS IN D.C. SPECIFICATION 618.14 AND 618.15 .
3. THIS DRAWING SUPPLEMENTS SPECIFIC PROJECT PLANS AND SPECIAL PROVISIONS, AS APPLICABLE.
4. ALL CONDUIT SHALL BE PVC TYPE 40 UNLESS OTHERWISE SPECIFIED.

NOTE: [ADAPTED FROM SHEET 11/12 OF DDOT SIGNAL DETAILS]

S.L.F. NO.

APPROVED BY — DATE

DISTRICT OF COLUMBIA
DEPARTMENT OF TRANSPORTATION
TRAFFIC SERVICES ADMINISTRATION

DETAIL

TRAFFIC SIGNAL (DETECTOR) DETAILS

RECOMMENDED Johnny Quigley 6/24/04
CHIEF, TRAFFIC SIGNAL DESIGN BRANCH — DATE
CHIEF, TRAFFIC SIGNAL OPERATIONS BRANCH — DATE
CHIEF, TRAFFIC SIGNAL CONSTRUCTION BRANCH — DATE
CHIEF, TRAFFIC SIGNAL MAINTENANCE BRANCH — DATE
APPROVED William W. McGrath 6/24/04
CHIEF, TRAFFIC SIGNAL SYSTEM DIVISION — DATE

FIELD CHECKED BY	ME
DESIGNED BY	ME
DRAWN BY	DB
DATE	4/13/04
SCALE	NONE
SHEET	3 OF 3
DRAWING NO.	S-1547-C

9/01/03 11:00 AM H:\PROJ\TRANSP\02\12\02 ROCK ...\BASE...PE\ DEE636-D.DGN (2D - V8)

NPS	REG	STATE	PROJECT	SHEET NO.	TOTAL SHEETS
821 41920	NC	DC	PRA-ROCR 3A5, 204(1)	1	1

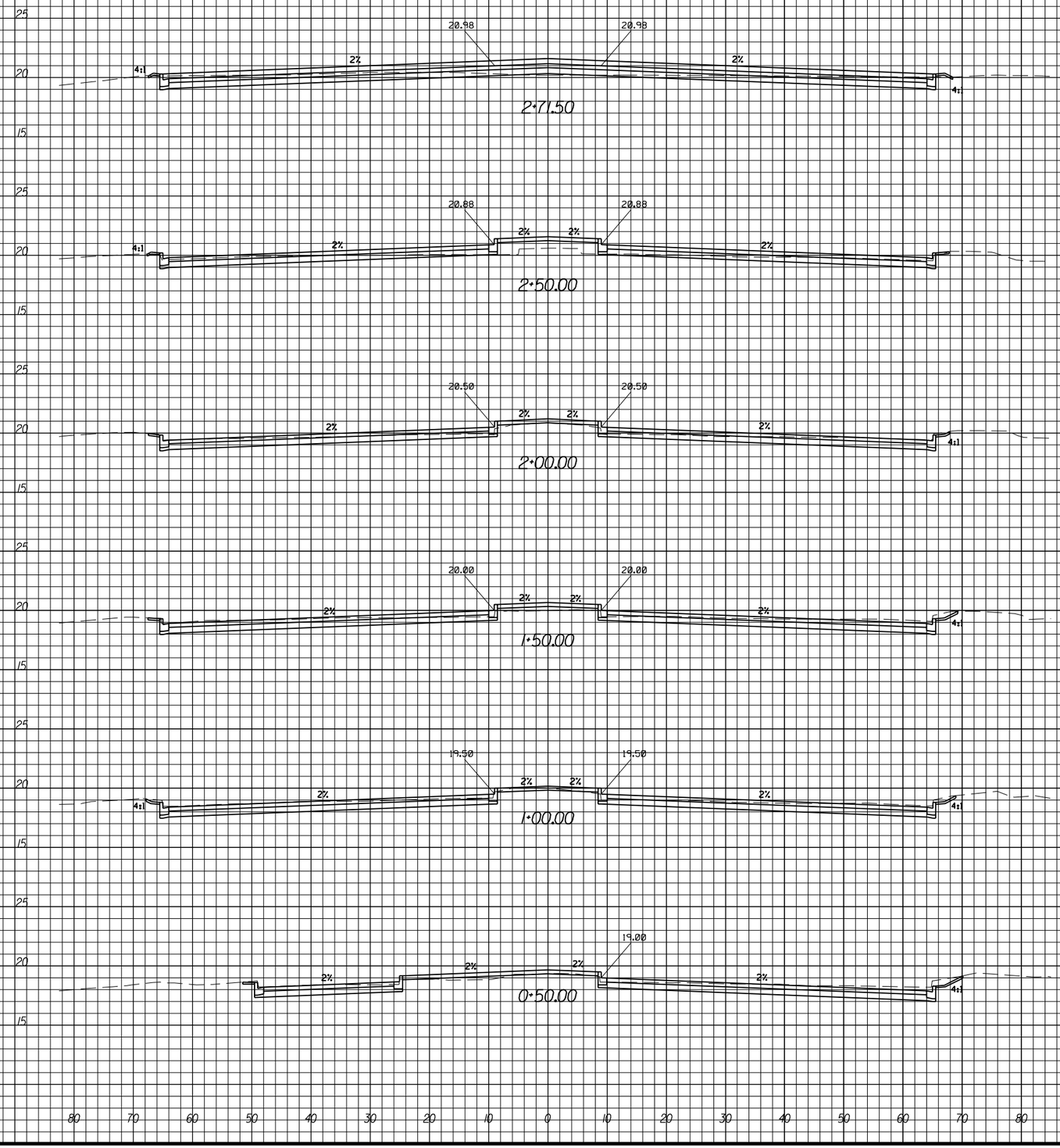

U.S. DEPARTMENT OF TRANSPORTATION
FEDERAL HIGHWAY ADMINISTRATION
EASTERN FEDERAL LANDS HIGHWAY DIVISION
STERLING, VIRGINIA

ROCK CREEK AND POTOMAC PARKWAY

CROSS SECTIONS

THOMPSON'S BOAT CENTER PARKING LOT
STA. 0+50 TO STA. 2+71.50

9/17/2006 4:12:06 PM E:\DGN's\cs02rock.dgn

NPS	REG	STATE	PROJECT	SHEET NO.	TOTAL SHEETS
821 41920	NC	DC	PRA-ROCR 3A5, 204(1)	1	1

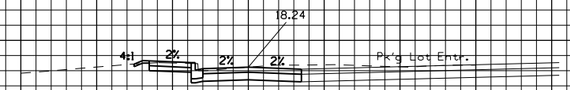

2+00.00

1+50.00

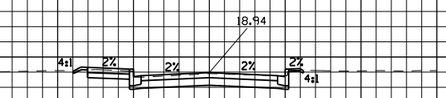

1+00.00

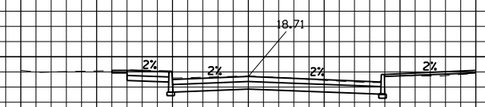

0+50.00

0+00.00
AT VIRGINIA AVE.

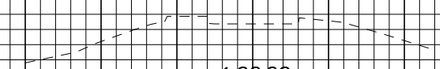

4+00.00

SECTIONS AT 3+00.00 AND 3+50.00
ARE ON THE BRIDGE

2+50.00

U.S. DEPARTMENT OF TRANSPORTATION
FEDERAL HIGHWAY ADMINISTRATION
EASTERN FEDERAL LANDS HIGHWAY DIVISION
STERLING, VIRGINIA

ROCK CREEK AND POTOMAC PARKWAY

CROSS SECTIONS

THOMPSON'S BOAT CENTER ACCESS ROAD
VIRGINIA AVE. TO BRIDGE (STA. 2+71.6)

9/17/2006 4:08:10 PM E:\DGN's\cs02rock.dgn

NPS	REG	STATE	PROJECT	SHEET NO.	TOTAL SHEETS
821 / 4192	NC	DC	PRA-ROCR 3A5, 204(1)	1	34

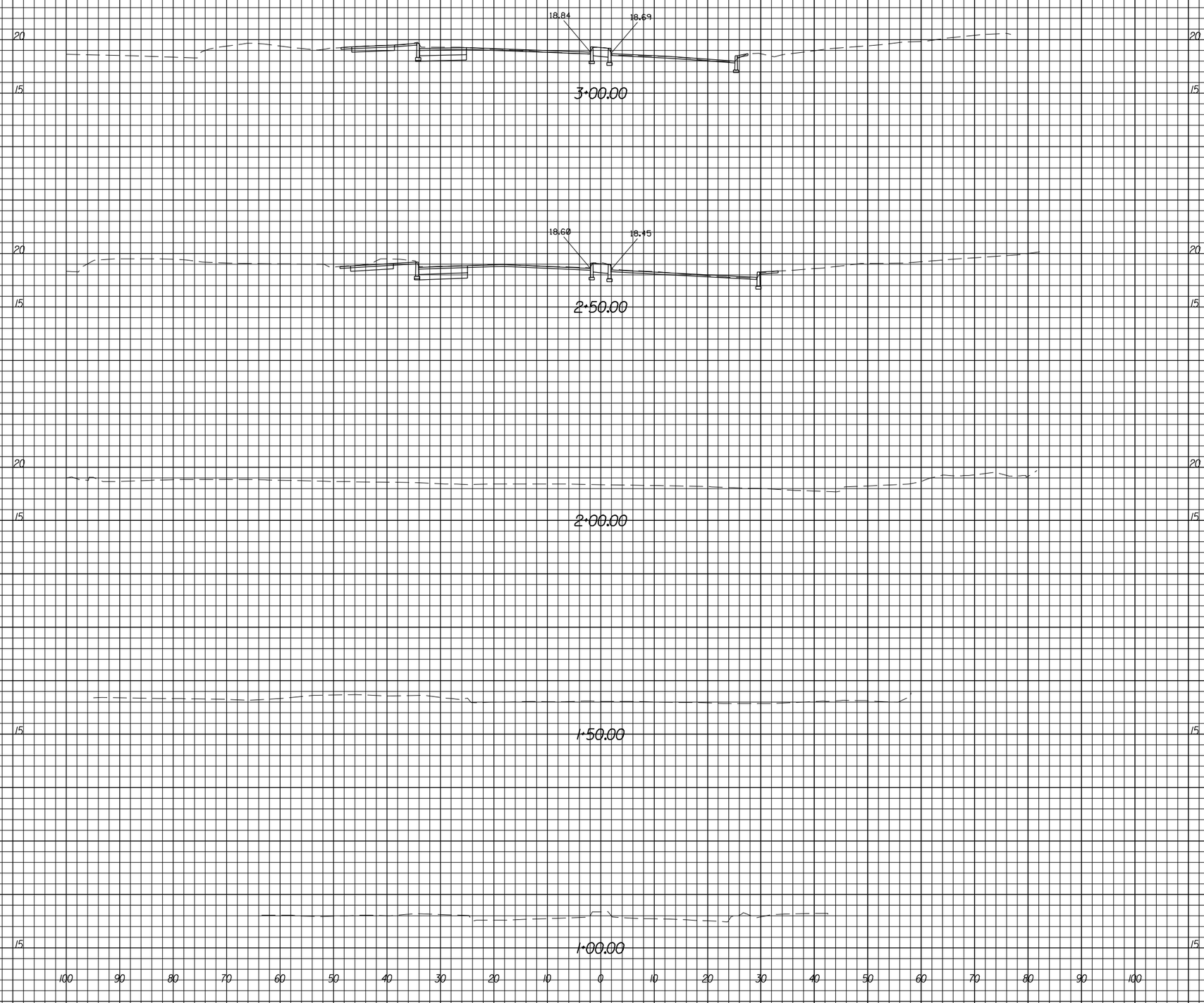

U.S. DEPARTMENT OF TRANSPORTATION
FEDERAL HIGHWAY ADMINISTRATION
EASTERN FEDERAL LANDS HIGHWAY DIVISION
STERLING, VIRGINIA

ROCK CREEK AND POTOMAC PARKWAY

CROSS SECTIONS

ROCK CREEK AND POTOMAC PARKWAY
STA. 1+00 TO STA. 3+00

9/8/2006 8:22:45 AM M:\Projects\roc\3a5_204\proj_dev\Cadd\cs02rock.dgn

NPS	REG	STATE	PROJECT	SHEET NO.	TOTAL SHEETS
821/4192	NC	DC	PRA-ROCR 3A5, 204(1)	2	34

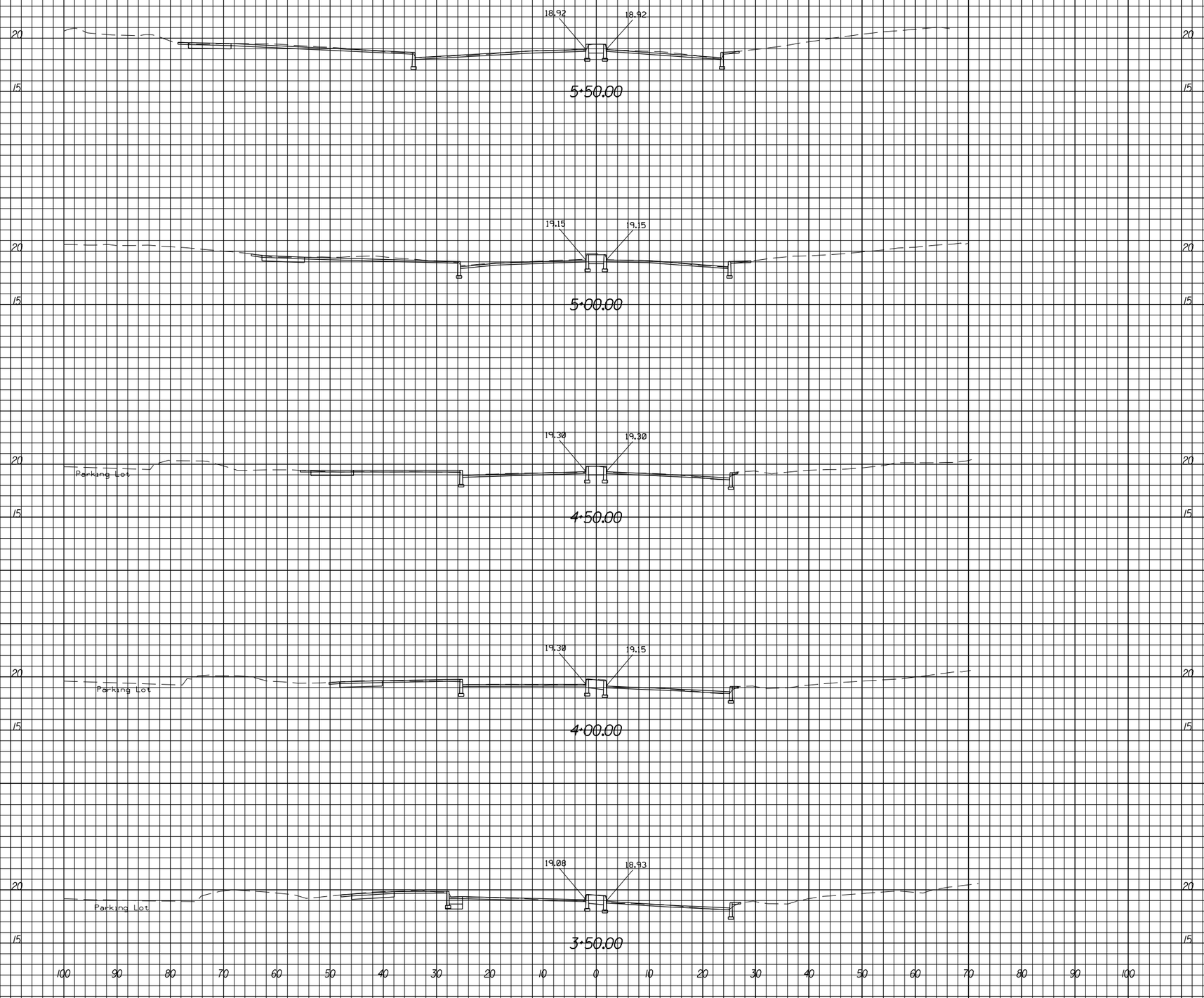

U.S. DEPARTMENT OF TRANSPORTATION
FEDERAL HIGHWAY ADMINISTRATION
EASTERN FEDERAL LANDS HIGHWAY DIVISION
STERLING, VIRGINIA

ROCK CREEK AND POTOMAC PARKWAY

CROSS SECTIONS

ROCK CREEK AND POTOMAC PARKWAY
STA. 3+50 TO STA. 5+50

9/8/2006 8:24:50 AM M:\Projects\roc\3a5_204\proj_dev\Cadd\cs02rock.dgn

NPS	REG	STATE	PROJECT	SHEET NO.	TOTAL SHEETS
821/4192	NC	DC	PRA-ROCR 3A5, 204(1)	3	34

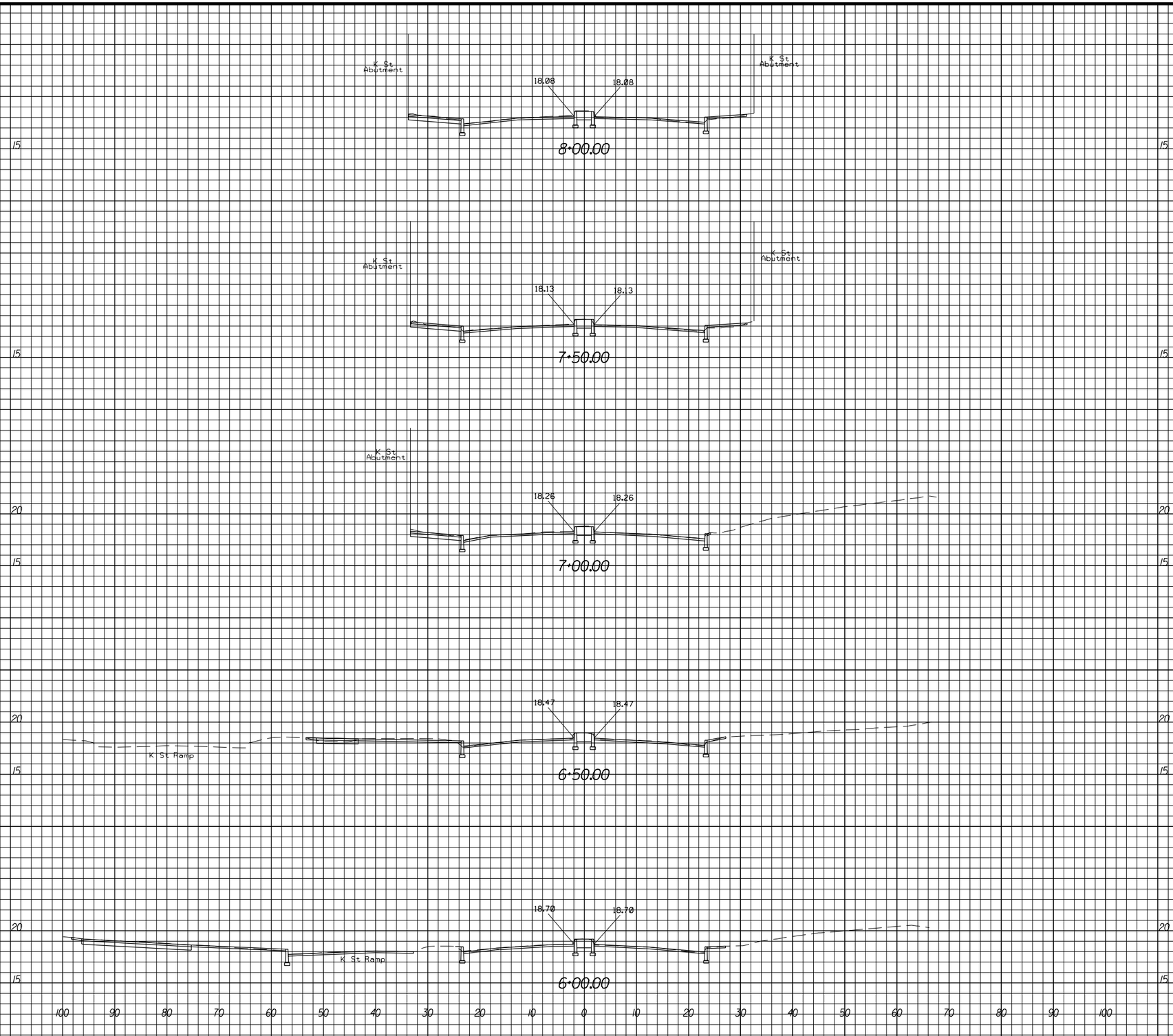

U.S. DEPARTMENT OF TRANSPORTATION
FEDERAL HIGHWAY ADMINISTRATION
EASTERN FEDERAL LANDS HIGHWAY DIVISION
STERLING, VIRGINIA

ROCK CREEK AND POTOMAC PARKWAY

CROSS SECTIONS

ROCK CREEK AND POTOMAC PARKWAY
STA. 6+00 TO STA. 8+00

9/8/2006 8:25:34 AM M:\Projects\roc\3a5_204\proj_dev\Cadd\cs02rock.dgn

NPS	REG	STATE	PROJECT	SHEET NO.	TOTAL SHEETS
821 / 4192	NC	DC	PRA-ROCR 3A5, 204(1)	4	34

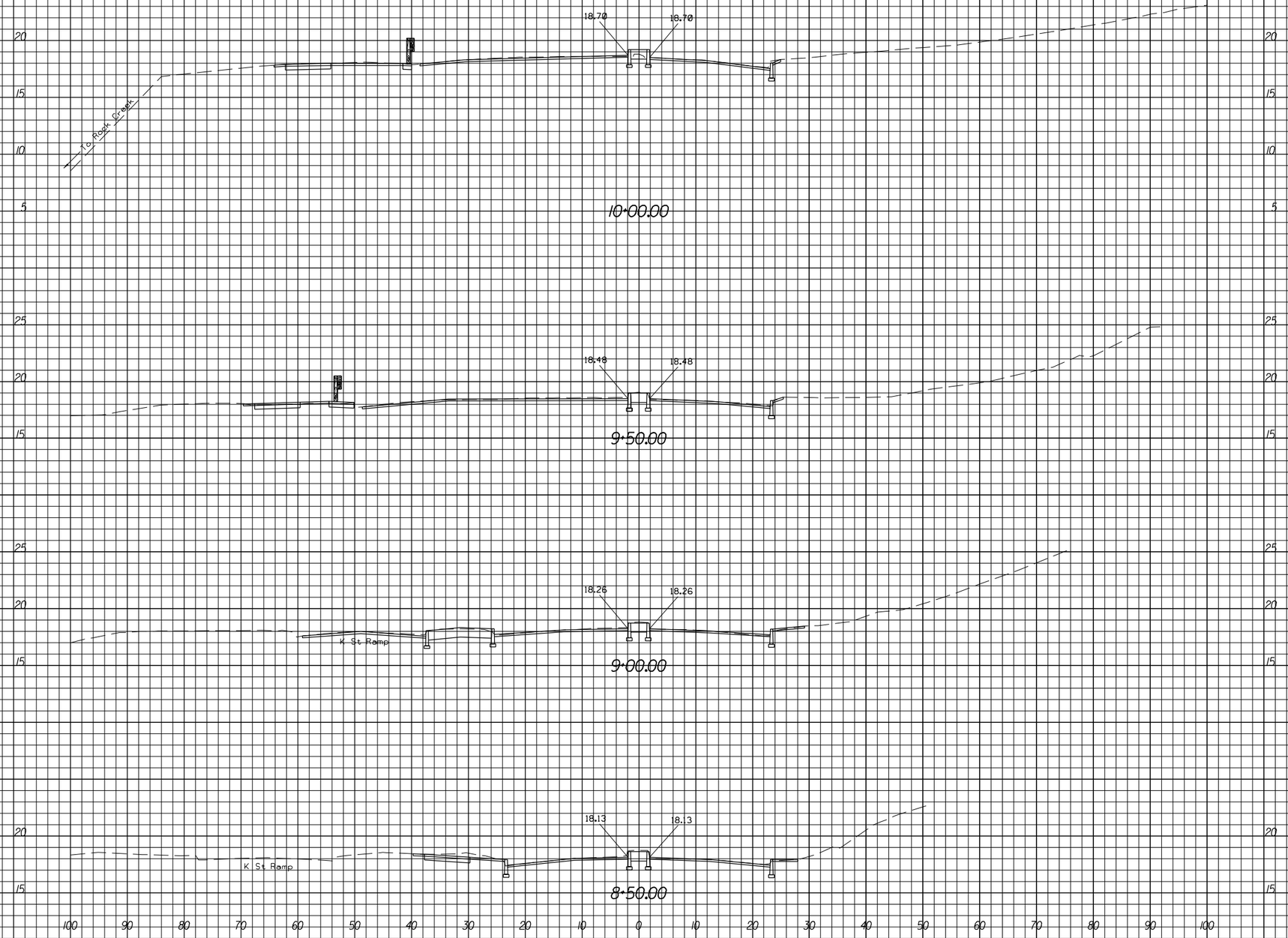

U.S. DEPARTMENT OF TRANSPORTATION
FEDERAL HIGHWAY ADMINISTRATION
EASTERN FEDERAL LANDS HIGHWAY DIVISION
STERLING, VIRGINIA

ROCK CREEK AND POTOMAC PARKWAY

CROSS SECTIONS

ROCK CREEK AND POTOMAC PARKWAY
STA. 8+50 TO STA. 10+00

9/8/2006 8:26:40 AM M:\Projects\rocr\3a5_204\proj_dev\Cadd\cs02rock.dgn

NPS	REG	STATE	PROJECT	SHEET NO.	TOTAL SHEETS
821/4192	NC	DC	PRA-ROCR 3A5, 204(1)	5	34

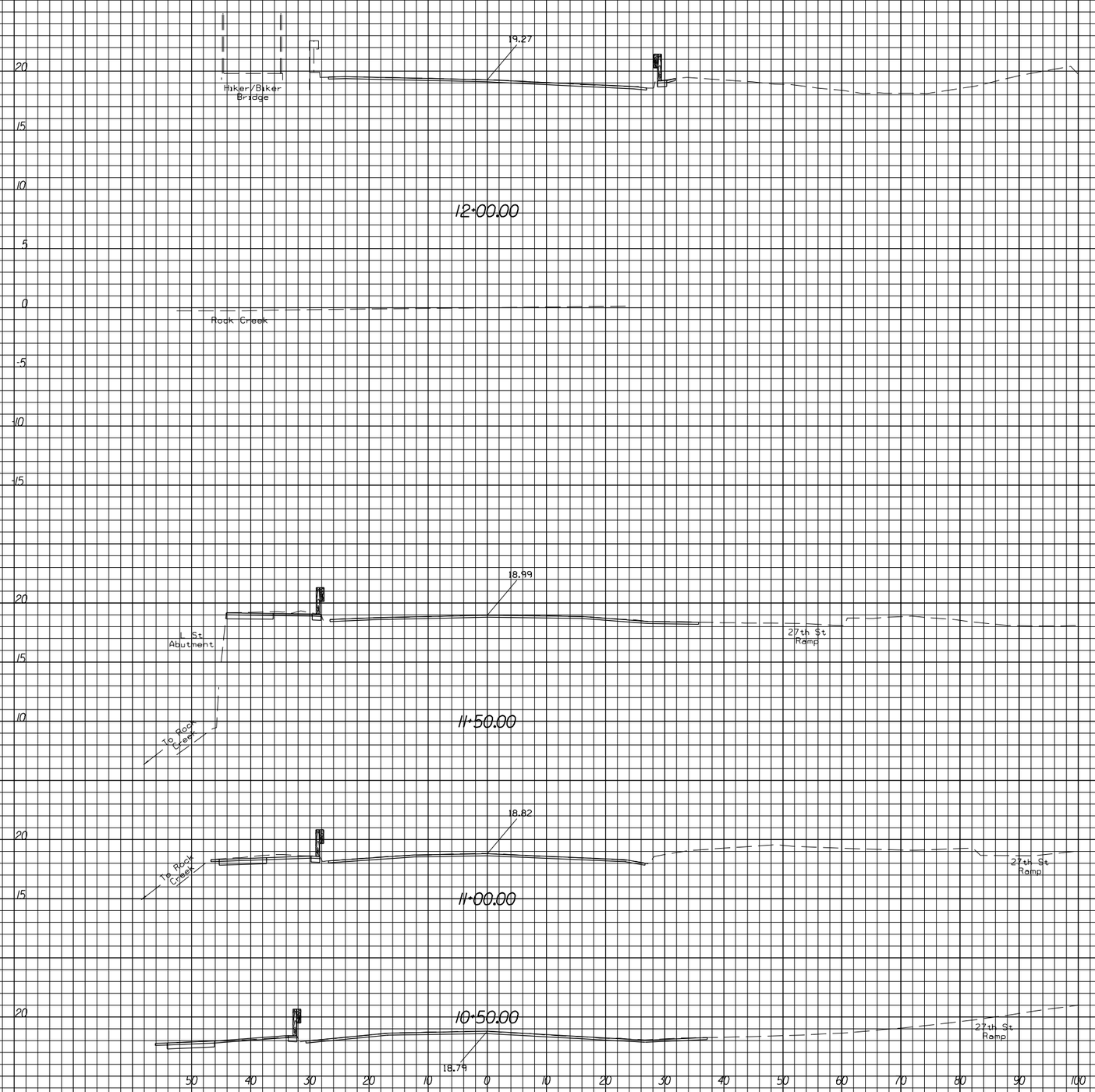

U.S. DEPARTMENT OF TRANSPORTATION
FEDERAL HIGHWAY ADMINISTRATION
EASTERN FEDERAL LANDS HIGHWAY DIVISION
STERLING, VIRGINIA

ROCK CREEK AND POTOMAC PARKWAY

CROSS SECTIONS

ROCK CREEK AND POTOMAC PARKWAY
STA. 10+50 TO STA. 12+00

9/8/2006 8:37:26 AM M:\Projects\roc\3a5_204\proj_dev\Cadd\cs02rock.dgn

NPS	REG	STATE	PROJECT	SHEET NO.	TOTAL SHEETS
821 / 4192	NC	DC	PRA-ROCR 3A5, 204(1)	6	34

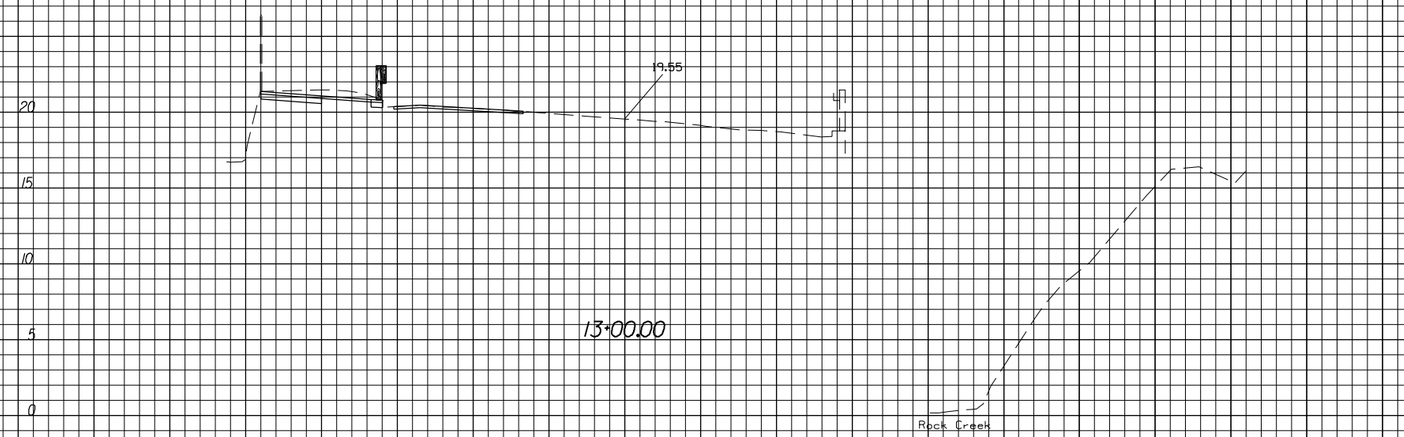

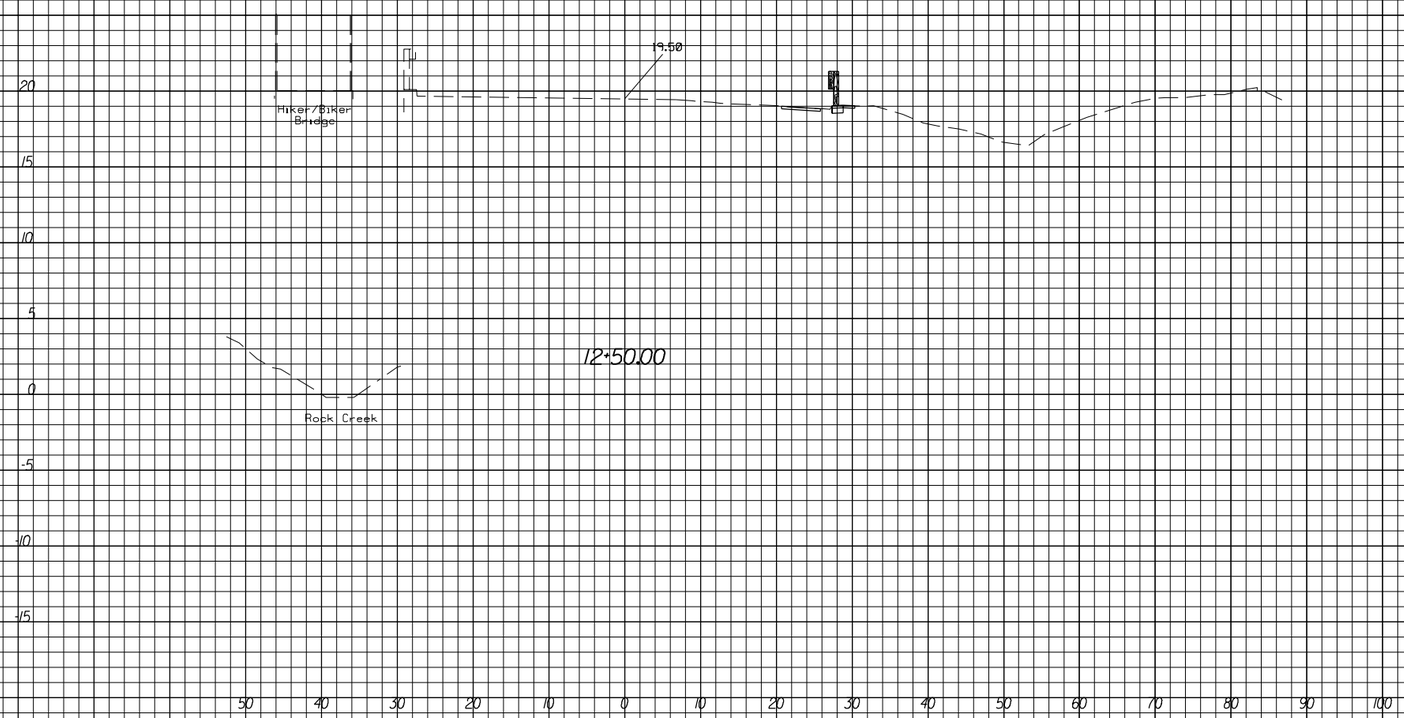

U.S. DEPARTMENT OF TRANSPORTATION
FEDERAL HIGHWAY ADMINISTRATION
EASTERN FEDERAL LANDS HIGHWAY DIVISION
STERLING, VIRGINIA

ROCK CREEK AND POTOMAC PARKWAY

CROSS SECTIONS

ROCK CREEK AND POTOMAC PARKWAY
STA. 12+50 TO STA. 13+00

9/8/2006 8:37:52 AM M:\Projects\rocr\3a5_204\proj_dev\Cadd\cs02rock.dgn

NPS	REG	STATE	PROJECT	SHEET NO.	TOTAL SHEETS
821 / 4192	NC	DC	PRA-ROCR 3A5, 204(1)	7	34

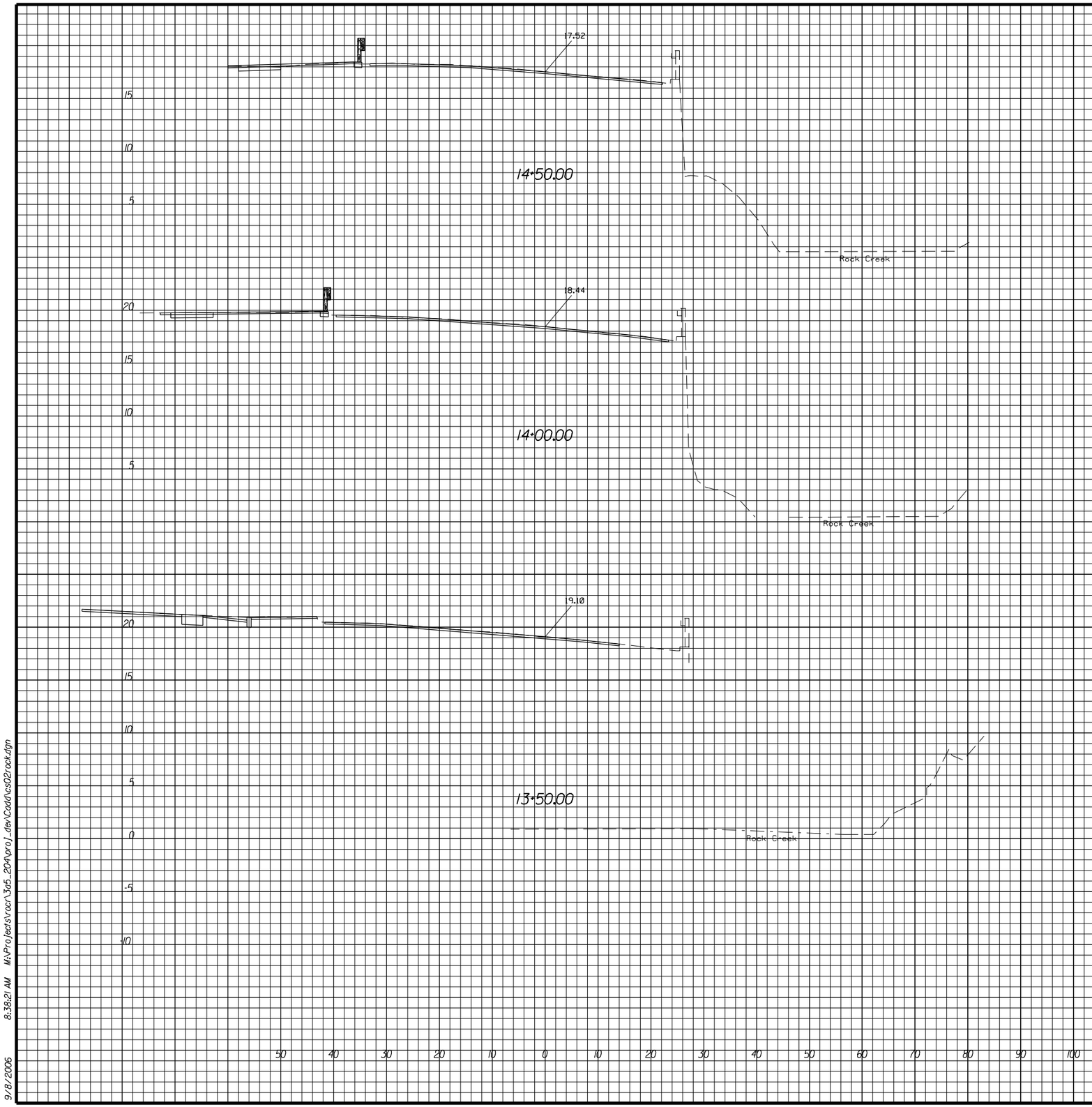

U.S. DEPARTMENT OF TRANSPORTATION
FEDERAL HIGHWAY ADMINISTRATION
EASTERN FEDERAL LANDS HIGHWAY DIVISION
STERLING, VIRGINIA

ROCK CREEK AND POTOMAC PARKWAY

CROSS SECTIONS

ROCK CREEK AND POTOMAC PARKWAY
STA. 13+50 TO STA. 14+50

9/8/2006 8:38:21 AM M:\Projects\rocr\3a5_204\proj_dev\Cadd\cs02rock.dgn

NPS	REG	STATE	PROJECT	SHEET NO.	TOTAL SHEETS
821 / 4192	NC	DC	PRA-ROCR 3A5, 204(1)	8	34

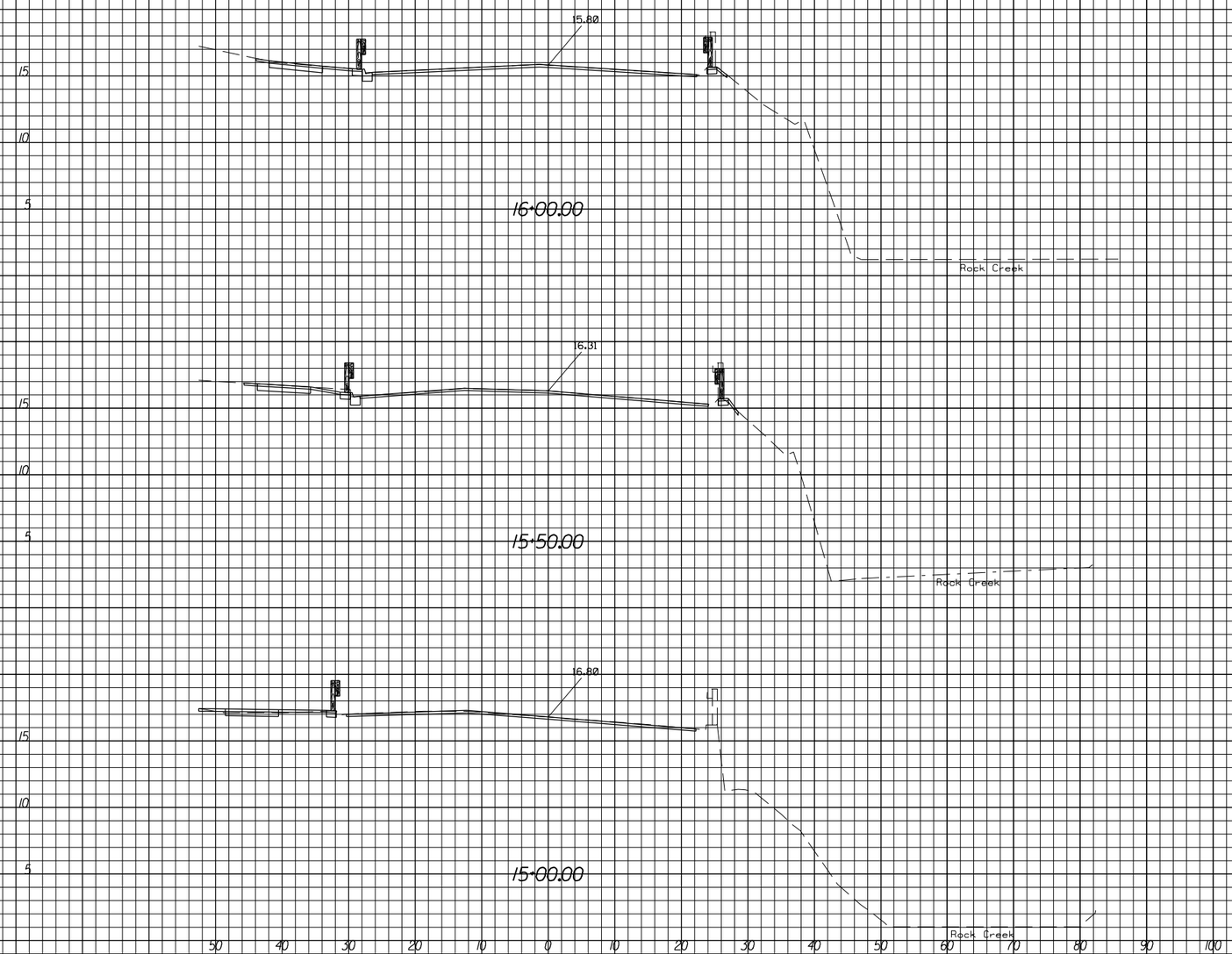

U.S. DEPARTMENT OF TRANSPORTATION
FEDERAL HIGHWAY ADMINISTRATION
EASTERN FEDERAL LANDS HIGHWAY DIVISION
STERLING, VIRGINIA

ROCK CREEK AND POTOMAC PARKWAY

CROSS SECTIONS

ROCK CREEK AND POTOMAC PARKWAY
STA. 15+00 TO STA. 16+00

9/8/2006 8:38:54 AM M:\Projects\roc\3a5_204\proj_dev\Cadd\cs02rock.dgn

NPS	REG	STATE	PROJECT	SHEET NO.	TOTAL SHEETS
821 / 4192	NC	DC	PRA-ROCR 3A5, 204(1)	9	34

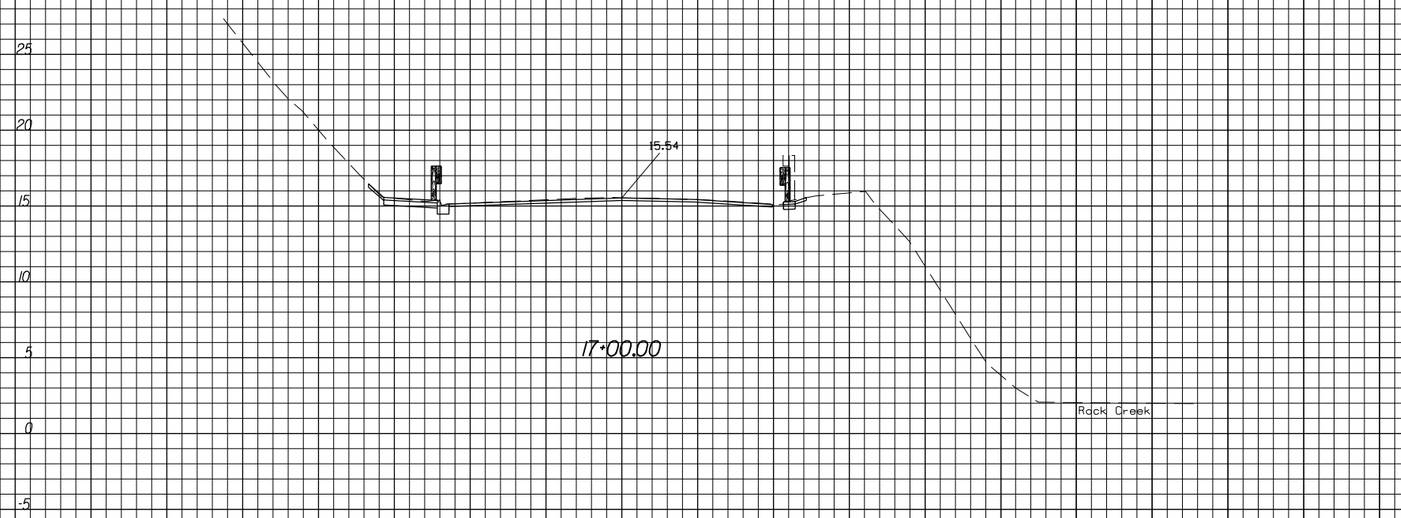

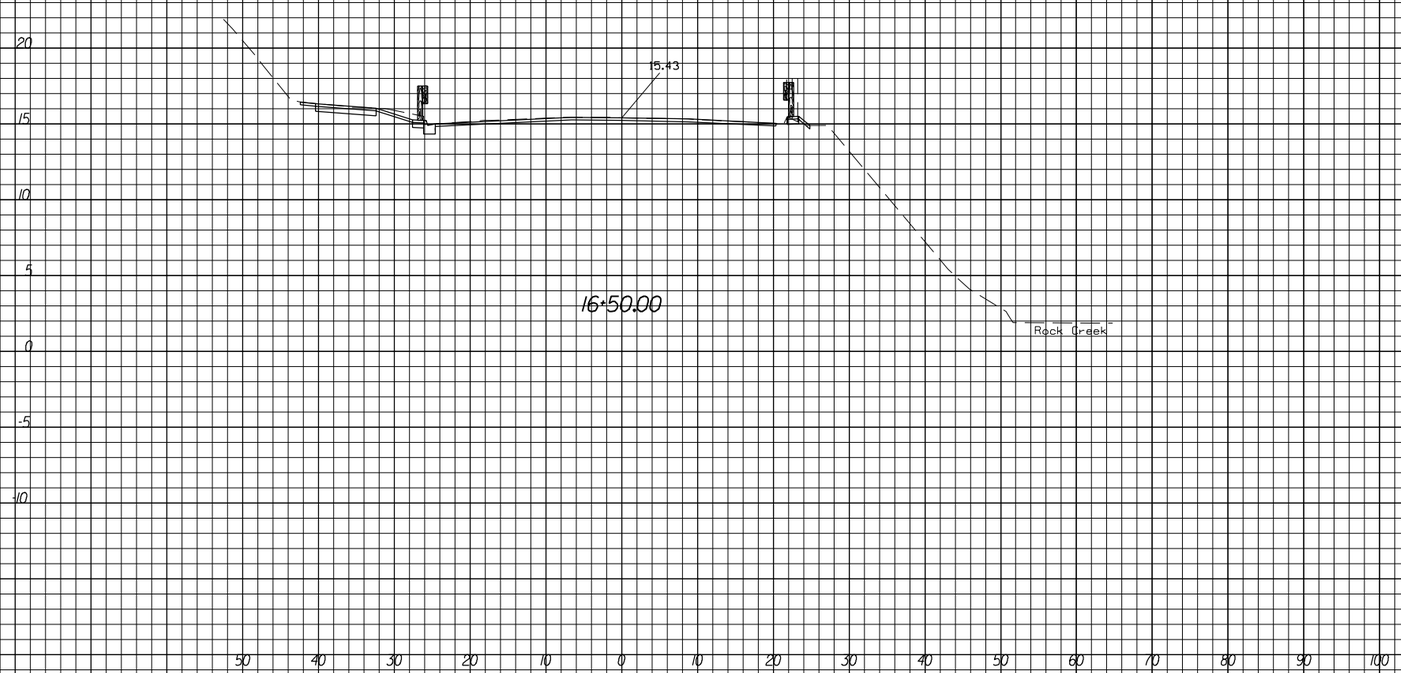

U.S. DEPARTMENT OF TRANSPORTATION
FEDERAL HIGHWAY ADMINISTRATION
EASTERN FEDERAL LANDS HIGHWAY DIVISION
STERLING, VIRGINIA

ROCK CREEK AND POTOMAC PARKWAY

CROSS SECTIONS

ROCK CREEK AND POTOMAC PARKWAY
STA. 16+50 TO STA. 17+00

9/8/2006 8:39:27 AM M:\Projects\rocr\3a5_204\proj_dev\Cadd\cs02rock.dgn

NPS	REG	STATE	PROJECT	SHEET NO.	TOTAL SHEETS
821 / 4192	NC	DC	PRA-ROCR 3A5, 204(1)	10	34

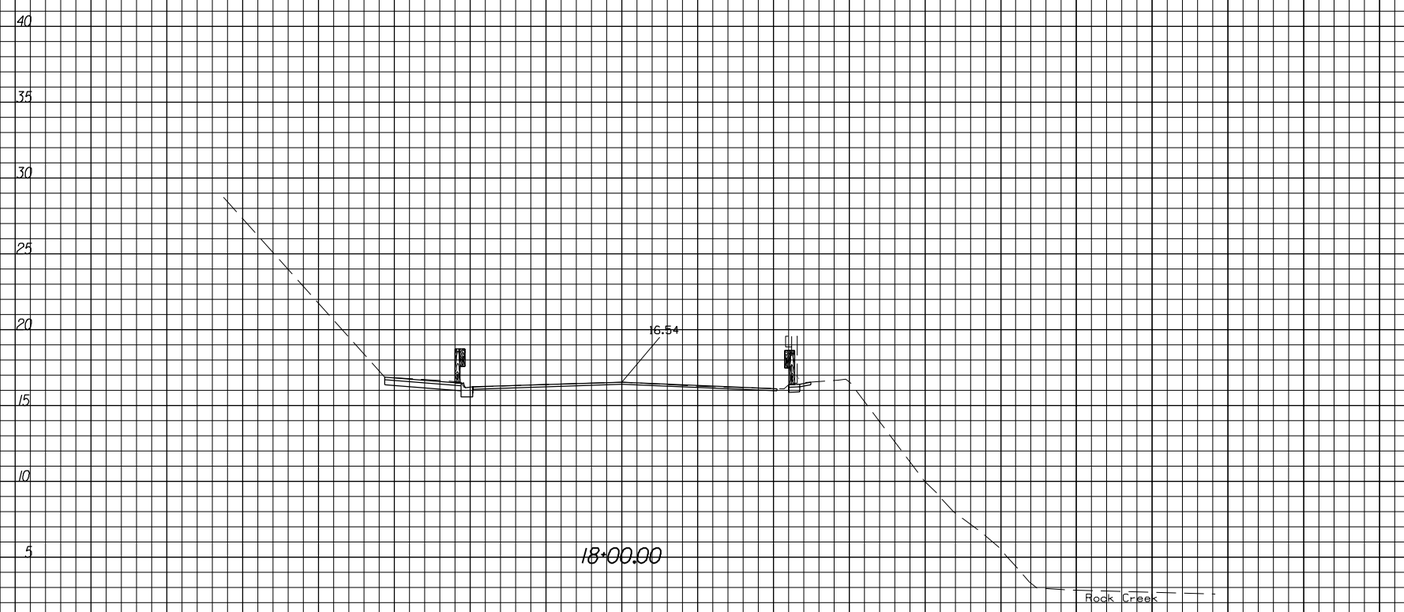

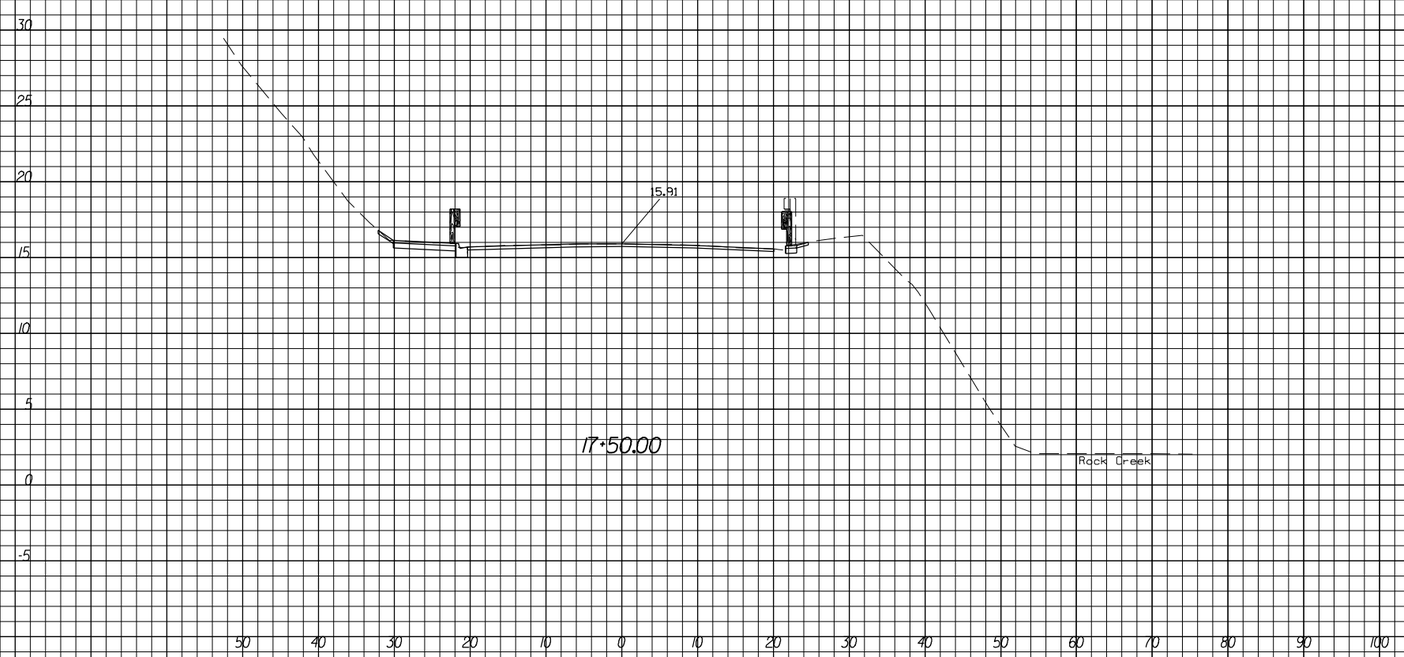

U.S. DEPARTMENT OF TRANSPORTATION
FEDERAL HIGHWAY ADMINISTRATION
EASTERN FEDERAL LANDS HIGHWAY DIVISION
STERLING, VIRGINIA

ROCK CREEK AND POTOMAC PARKWAY

CROSS SECTIONS

ROCK CREEK AND POTOMAC PARKWAY
STA. 17+50 TO STA. 18+00

9/8/2006 8:41:00 AM M:\Projects\rocr\3a5_204\proj_dev\Cadd\cs02rock.dgn

NPS	REG	STATE	PROJECT	SHEET NO.	TOTAL SHEETS
821/4192	NC	DC	PRA-ROCR 3A5, 204(1)	11	34

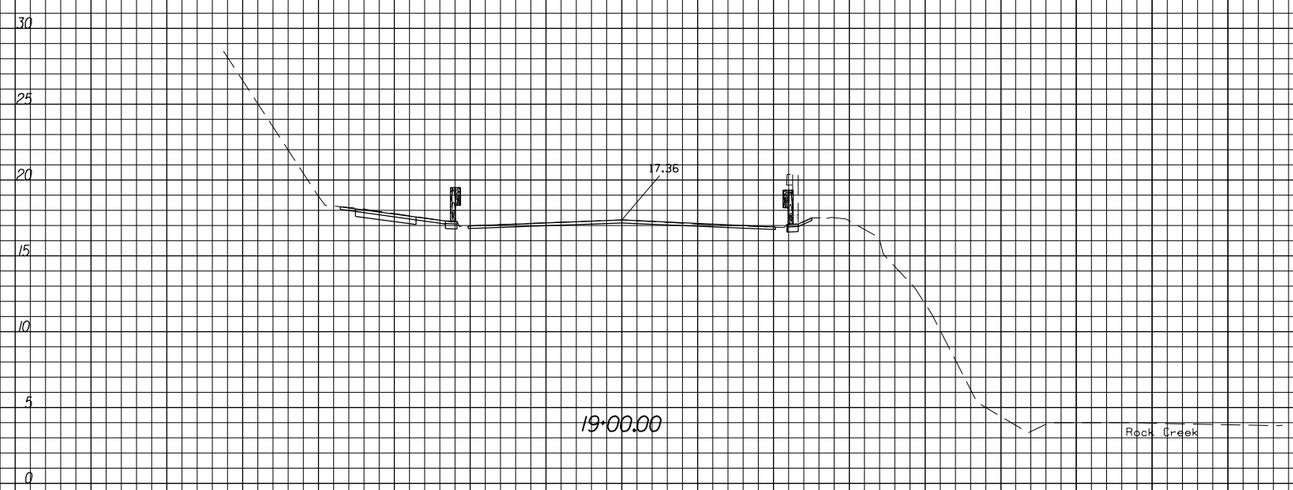

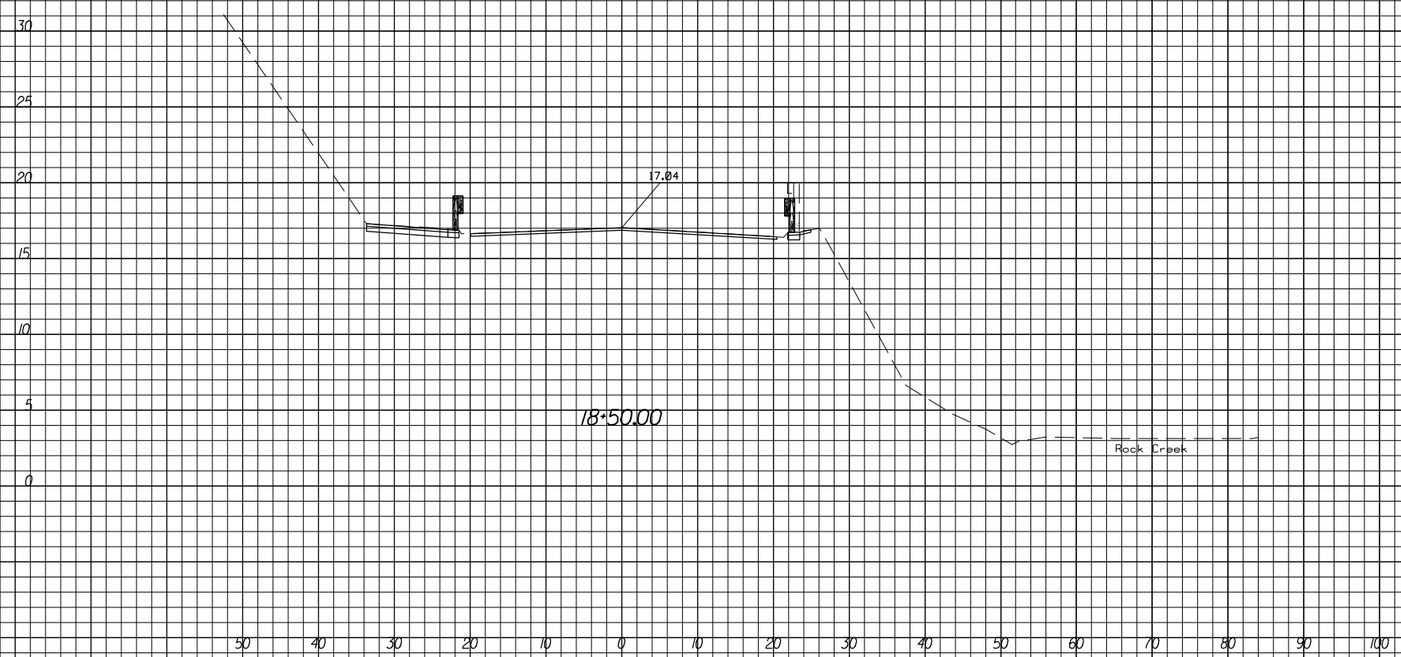

U.S. DEPARTMENT OF TRANSPORTATION
FEDERAL HIGHWAY ADMINISTRATION
EASTERN FEDERAL LANDS HIGHWAY DIVISION
STERLING, VIRGINIA

ROCK CREEK AND POTOMAC PARKWAY

CROSS SECTIONS

ROCK CREEK AND POTOMAC PARKWAY
STA. 18+50 TO STA. 19+00

9/8/2006 8:46:13 AM M:\Projects\rocr\3a5_204\proj_dev\Cadd\cs02rock.dgn

NPS	REG	STATE	PROJECT	SHEET NO.	TOTAL SHEETS
821 / 4192	NC	DC	PRA-ROCR 3A5, 204(1)	12	34

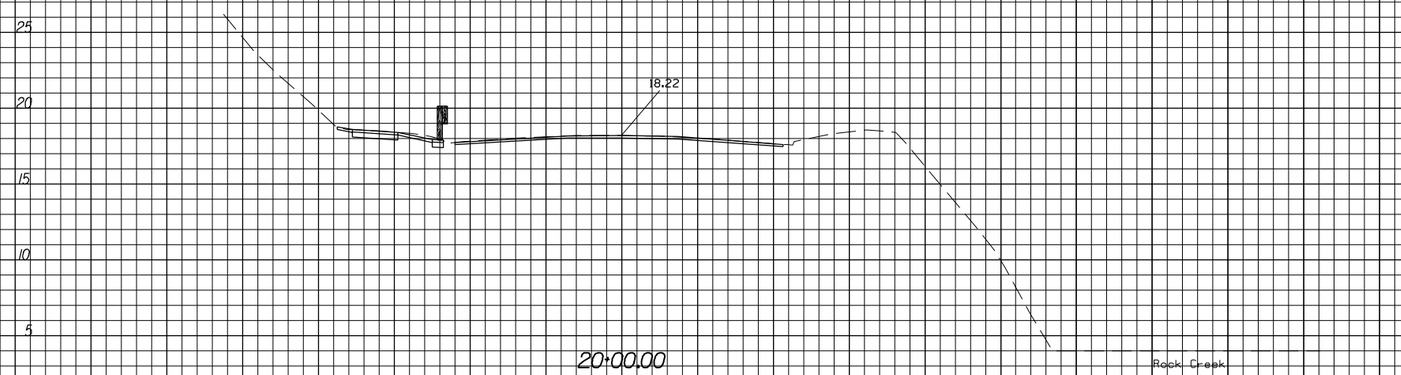

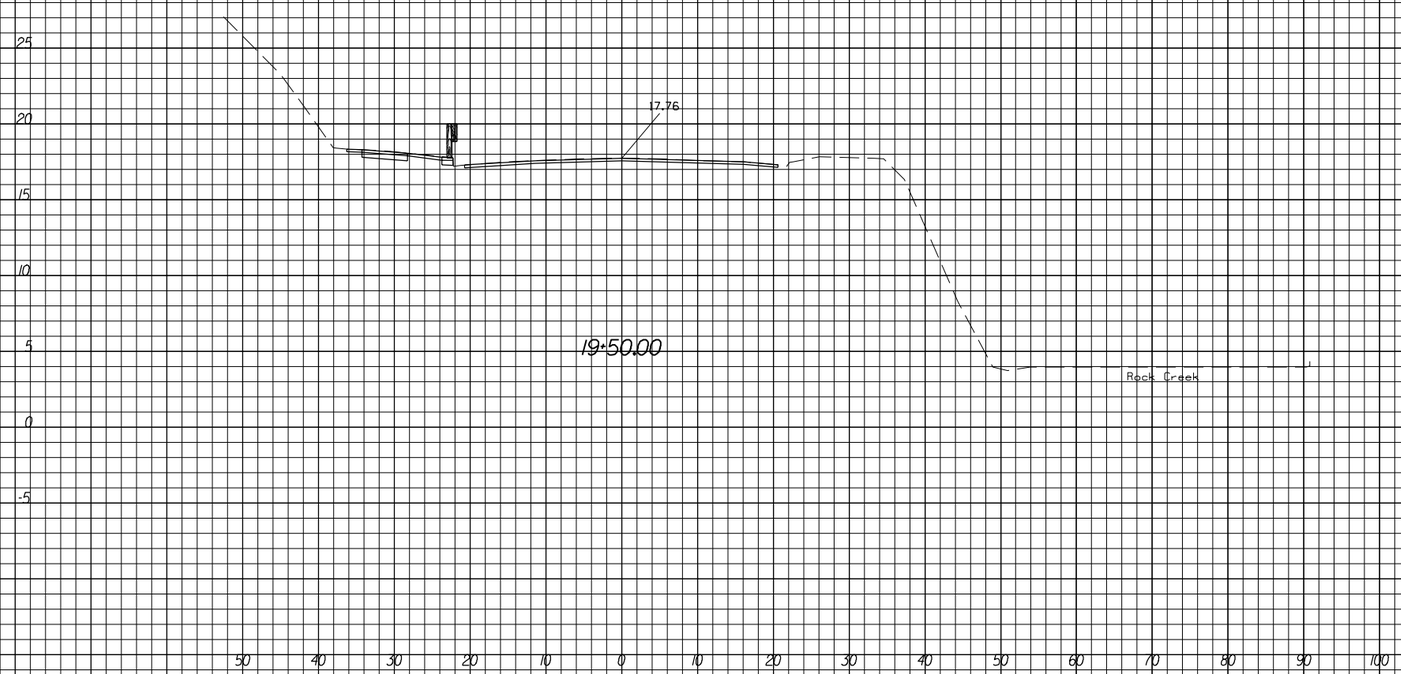

U.S. DEPARTMENT OF TRANSPORTATION
FEDERAL HIGHWAY ADMINISTRATION
EASTERN FEDERAL LANDS HIGHWAY DIVISION
STERLING, VIRGINIA

ROCK CREEK AND POTOMAC PARKWAY

CROSS SECTIONS

ROCK CREEK AND POTOMAC PARKWAY
STA. 19+50 TO STA. 20+00

9/8/2006 8:46:33 AM M:\Projects\roc\3a5_204\proj_dev\Cadd\cs02rock.dgn

NPS	REG	STATE	PROJECT	SHEET NO.	TOTAL SHEETS
821 / 4192	NC	DC	PRA-ROCR 3A5, 204(1)	13	34

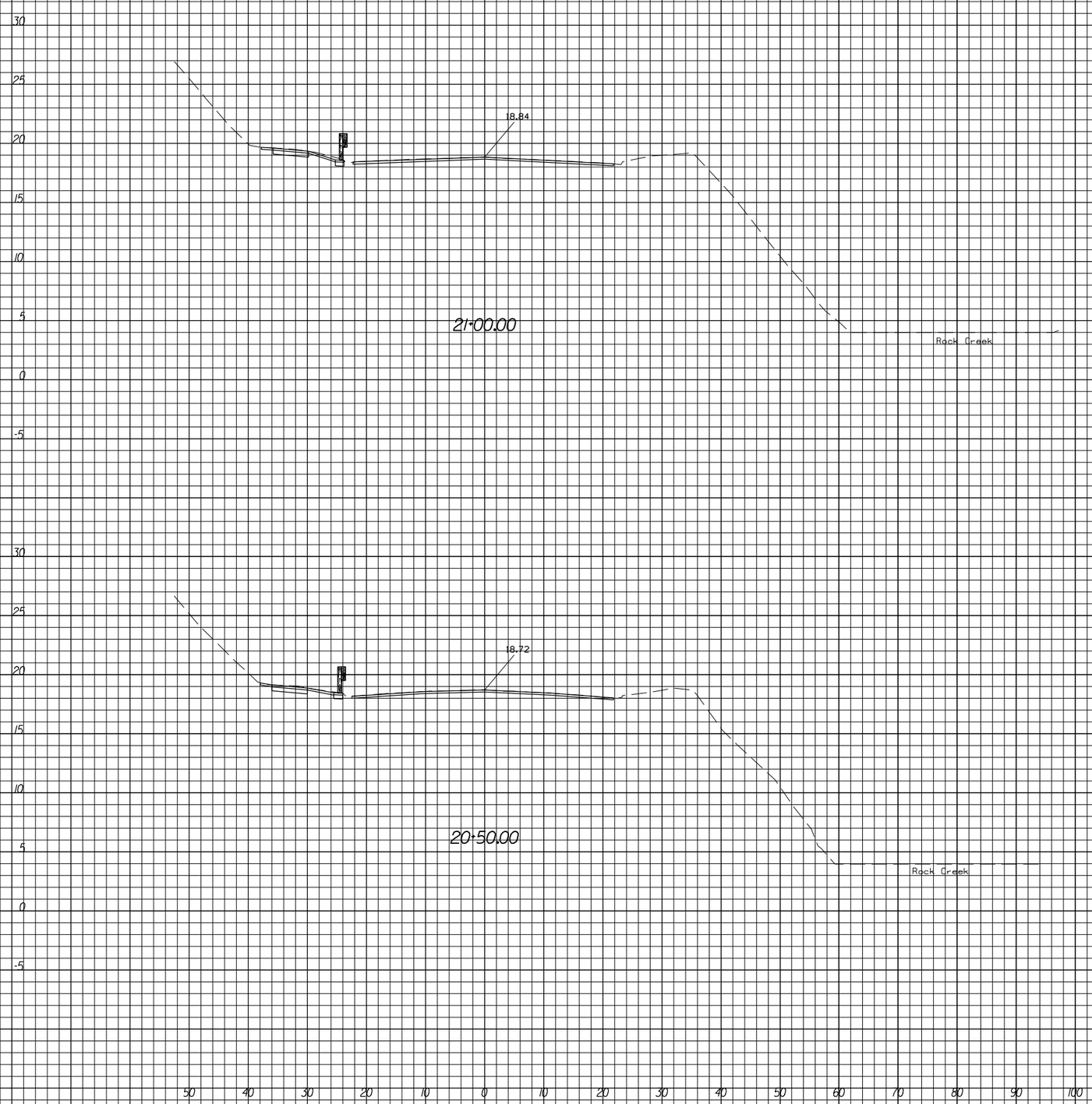

U.S. DEPARTMENT OF TRANSPORTATION
FEDERAL HIGHWAY ADMINISTRATION
EASTERN FEDERAL LANDS HIGHWAY DIVISION
STERLING, VIRGINIA

ROCK CREEK AND POTOMAC PARKWAY

CROSS SECTIONS

ROCK CREEK AND POTOMAC PARKWAY
STA. 20+50 TO STA. 21+00

9/8/2006 8:47:00 AM M:\Projects\rocr\3a5_204\proj_dev\Cadd\cs02rock.dgn

NPS	REG	STATE	PROJECT	SHEET NO.	TOTAL SHEETS
821/4192	NC	DC	PRA-ROCR 3A5, 204(1)	14	34

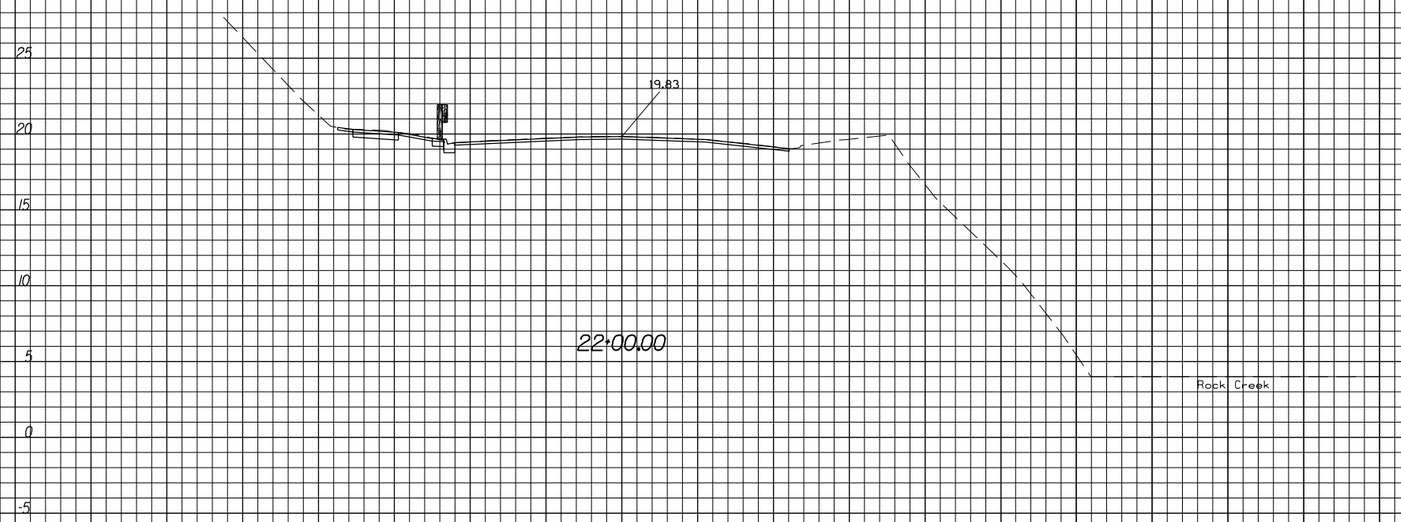

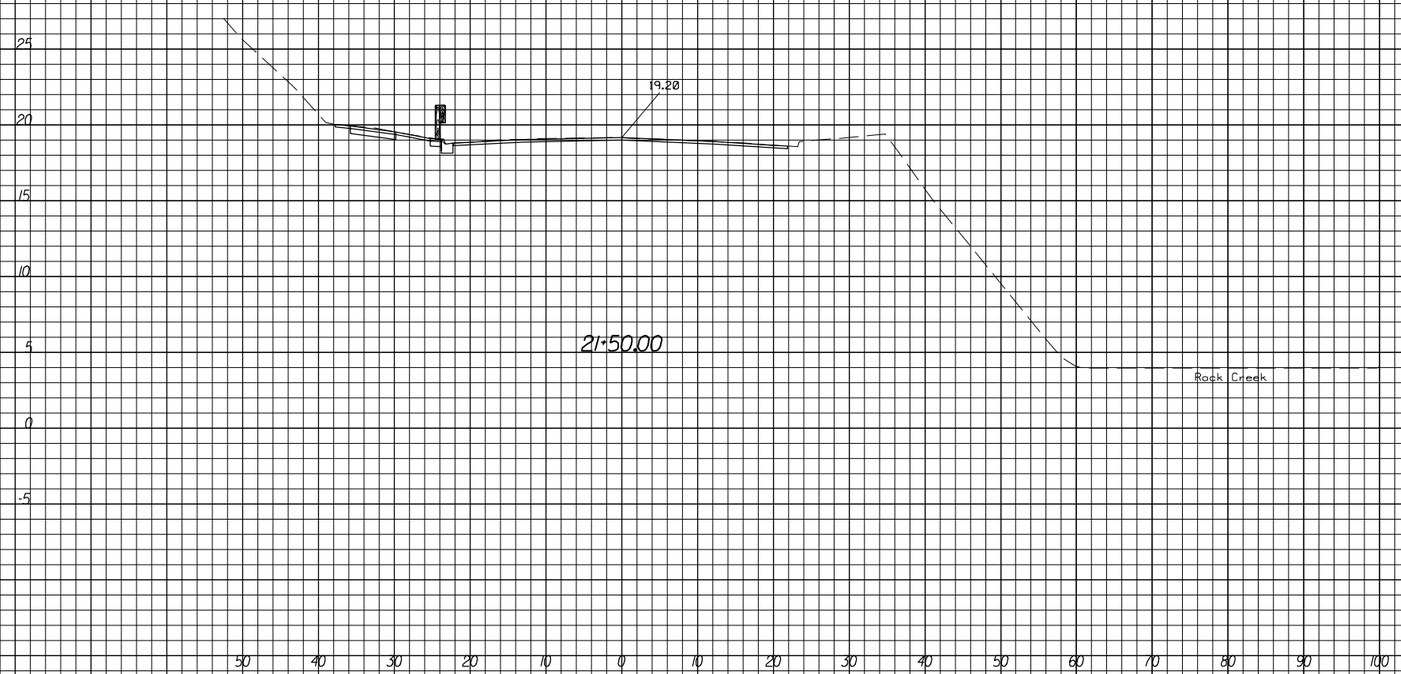

U.S. DEPARTMENT OF TRANSPORTATION
FEDERAL HIGHWAY ADMINISTRATION
EASTERN FEDERAL LANDS HIGHWAY DIVISION
STERLING, VIRGINIA

ROCK CREEK AND POTOMAC PARKWAY

CROSS SECTIONS

ROCK CREEK AND POTOMAC PARKWAY
STA. 21+50 TO STA. 22+00

9/8/2006 8:47:31 AM M:\Projects\rocr\3a5_204\proj_dev\Cadd\cs02rock.dgn

NPS	REG	STATE	PROJECT	SHEET NO.	TOTAL SHEETS
821 / 4192	NC	DC	PRA-ROCR 3A5, 204(1)	15	34

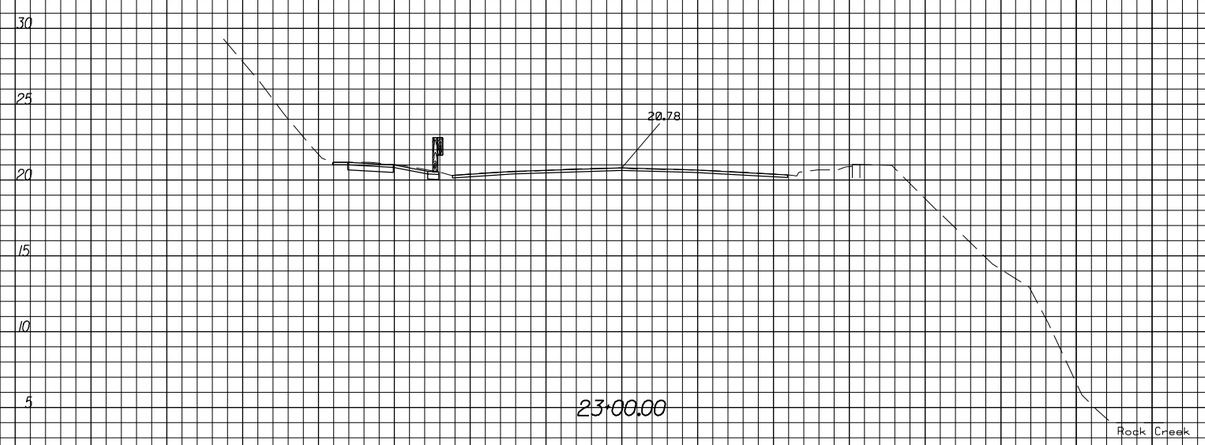

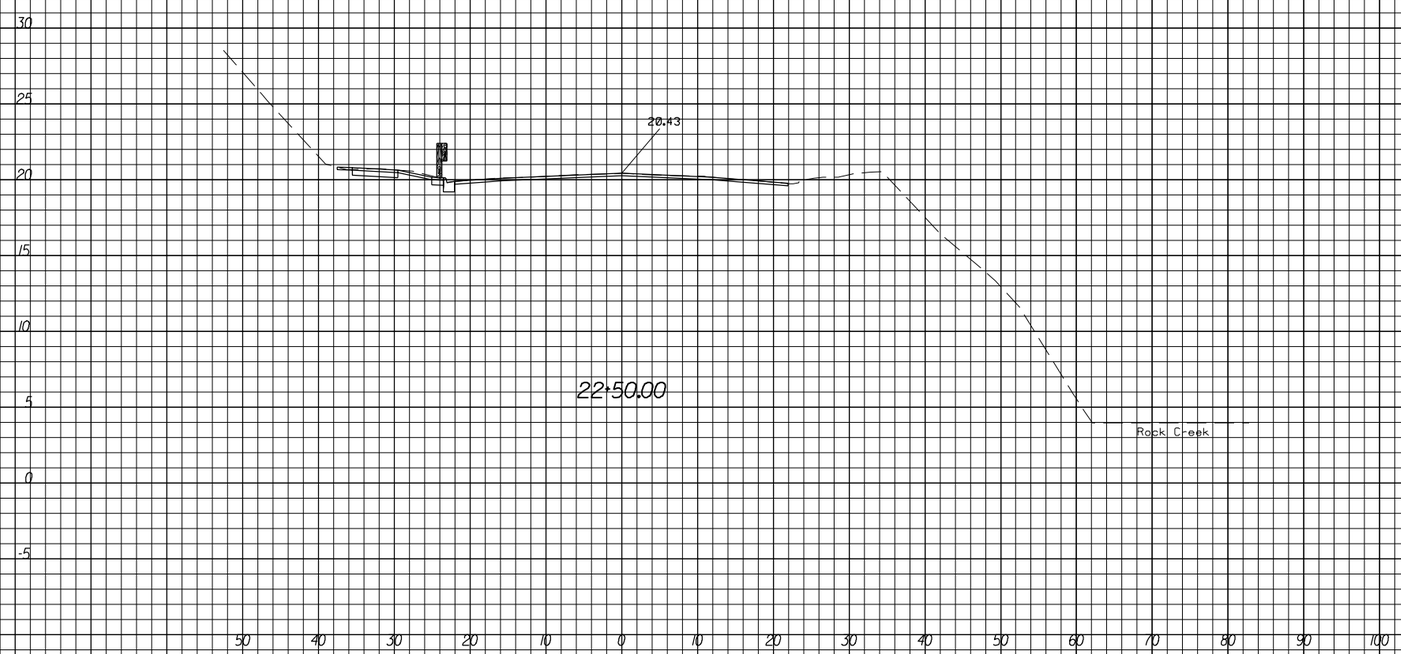

U.S. DEPARTMENT OF TRANSPORTATION
FEDERAL HIGHWAY ADMINISTRATION
EASTERN FEDERAL LANDS HIGHWAY DIVISION
STERLING, VIRGINIA

ROCK CREEK AND POTOMAC PARKWAY

CROSS SECTIONS

ROCK CREEK AND POTOMAC PARKWAY
STA. 22+50 TO STA. 23+00

9/8/2006 8:48:22 AM M:\Projects\rocr\3a5_204\proj_dev\Cadd\cs02rock.dgn

NPS	REG	STATE	PROJECT	SHEET NO.	TOTAL SHEETS
821 / 4192	NC	DC	PRA-ROCR 3A5, 204(1)	16	34

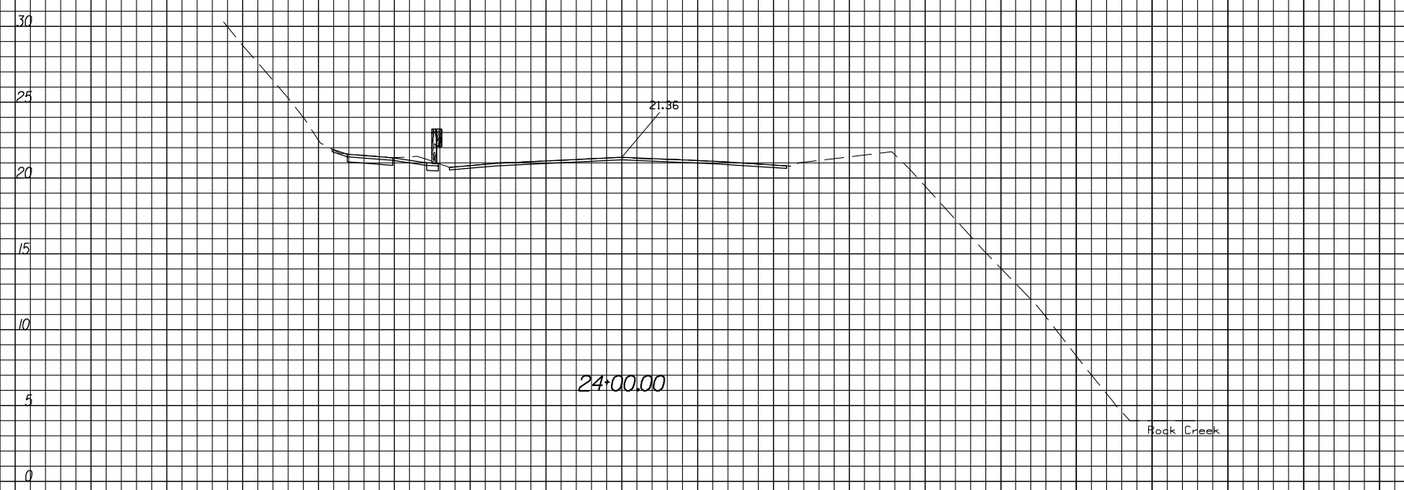

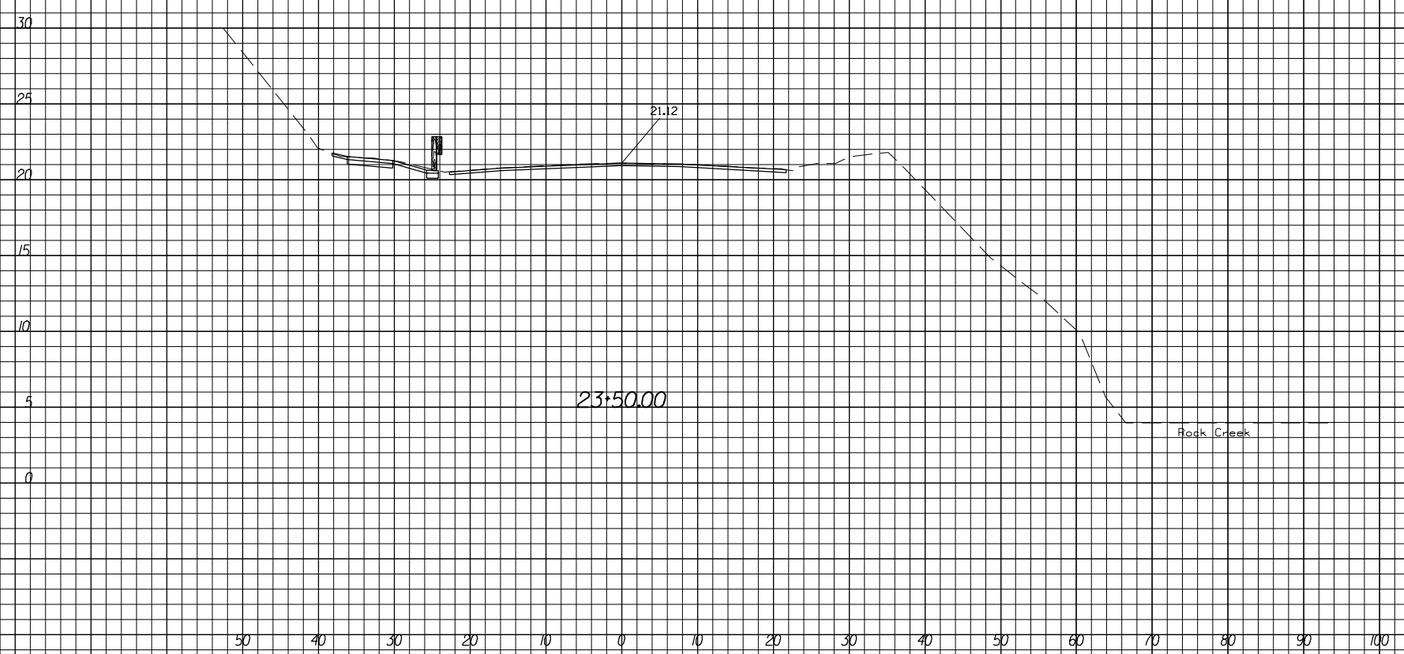

U.S. DEPARTMENT OF TRANSPORTATION
FEDERAL HIGHWAY ADMINISTRATION
EASTERN FEDERAL LANDS HIGHWAY DIVISION
STERLING, VIRGINIA

ROCK CREEK AND POTOMAC PARKWAY

CROSS SECTIONS

ROCK CREEK AND POTOMAC PARKWAY
STA. 23+50 TO STA. 24+00

9/8/2006 8:48:44 AM M:\Projects\rocr\3a5_204\proj_dev\Cadd\cs02rock.dgn

NPS	REG	STATE	PROJECT	SHEET NO.	TOTAL SHEETS
821 / 4192	NC	DC	PRA-ROCR 3A5, 204(1)	17	34

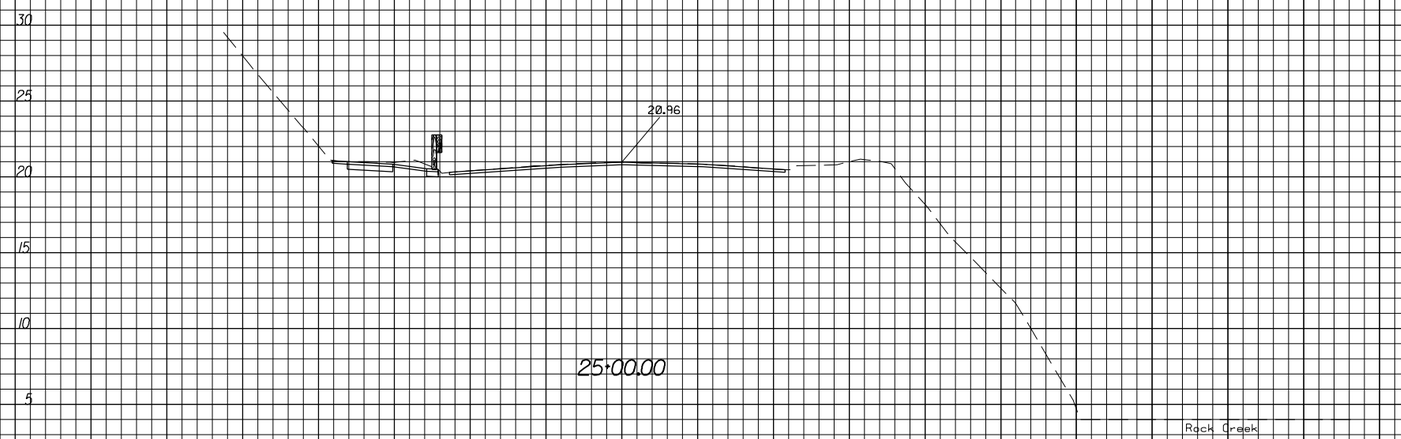

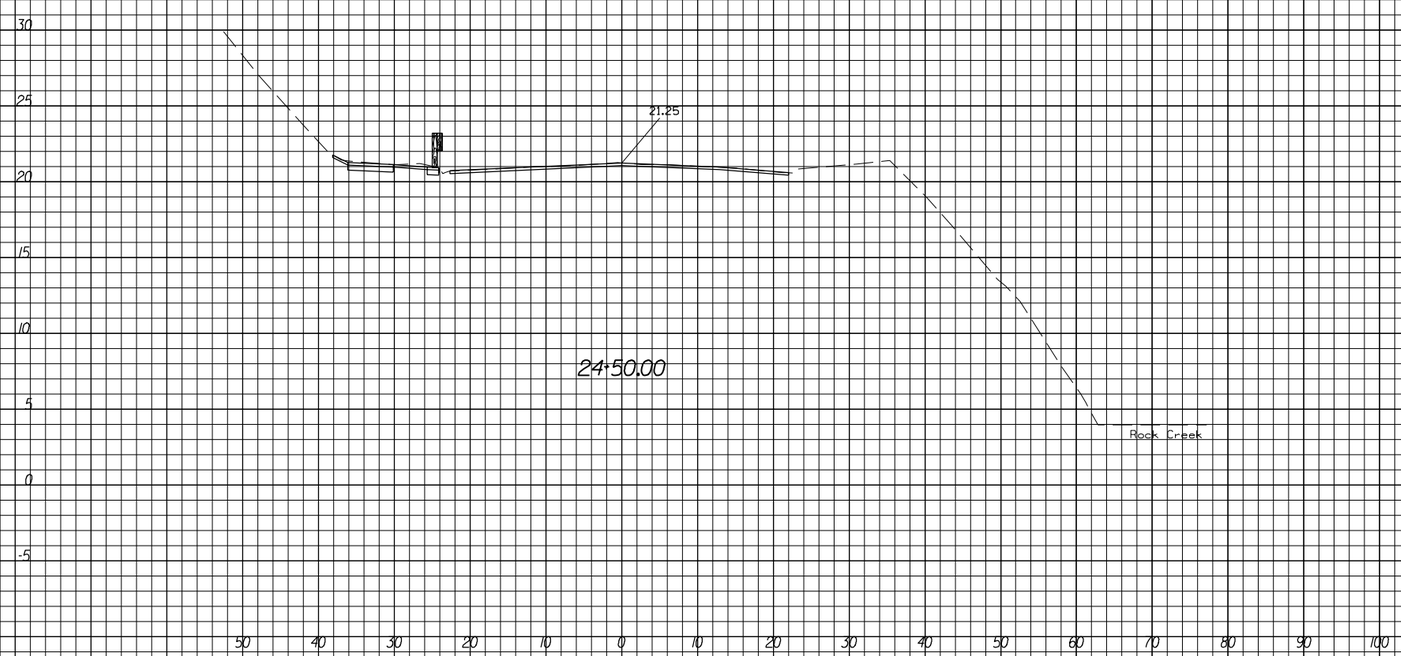

U.S. DEPARTMENT OF TRANSPORTATION
FEDERAL HIGHWAY ADMINISTRATION
EASTERN FEDERAL LANDS HIGHWAY DIVISION
STERLING, VIRGINIA

ROCK CREEK AND POTOMAC PARKWAY

CROSS SECTIONS

ROCK CREEK AND POTOMAC PARKWAY
STA. 24+50 TO STA. 25+00

9/8/2006 8:49:05 AM M:\Projects\rocr\3a5_204\proj_dev\Cadd\cs02rock.dgn

NPS	REG	STATE	PROJECT	SHEET NO.	TOTAL SHEETS
821/4192	NC	DC	PRA-ROCR 3A5, 204(1)	18	34

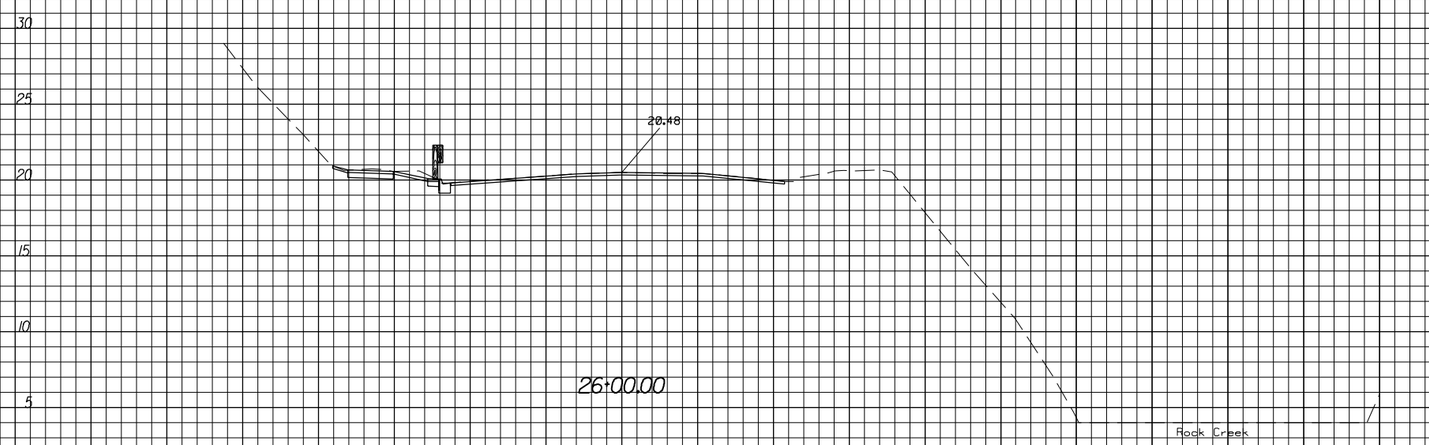

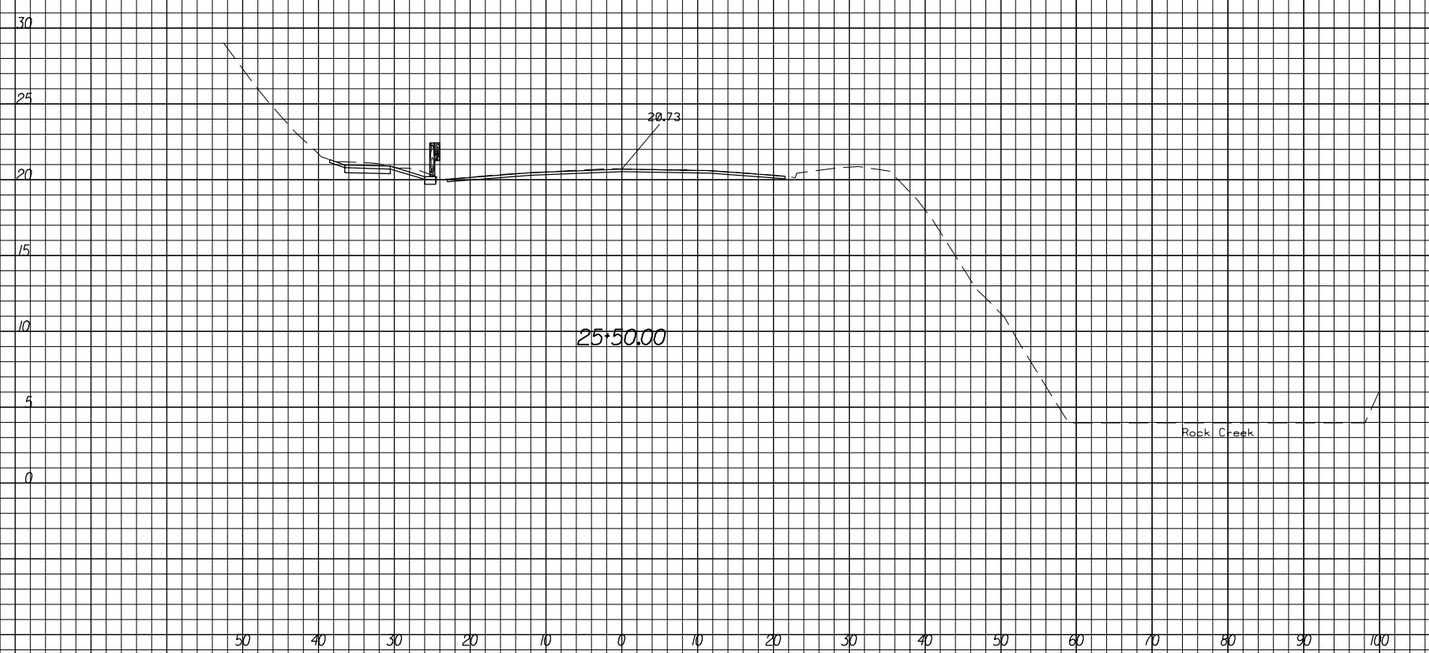

U.S. DEPARTMENT OF TRANSPORTATION
FEDERAL HIGHWAY ADMINISTRATION
EASTERN FEDERAL LANDS HIGHWAY DIVISION
STERLING, VIRGINIA

ROCK CREEK AND POTOMAC PARKWAY

CROSS SECTIONS

ROCK CREEK AND POTOMAC PARKWAY
STA. 25+50 TO STA. 26+00

9/8/2006 8:49:39 AM M:\Projects\rocr\3a5_204\proj_dev\Cadd\cs02rock.dgn

NPS	REG	STATE	PROJECT	SHEET NO.	TOTAL SHEETS
821/4192	NC	DC	PRA-ROCR 3A5, 204(1)	19	34

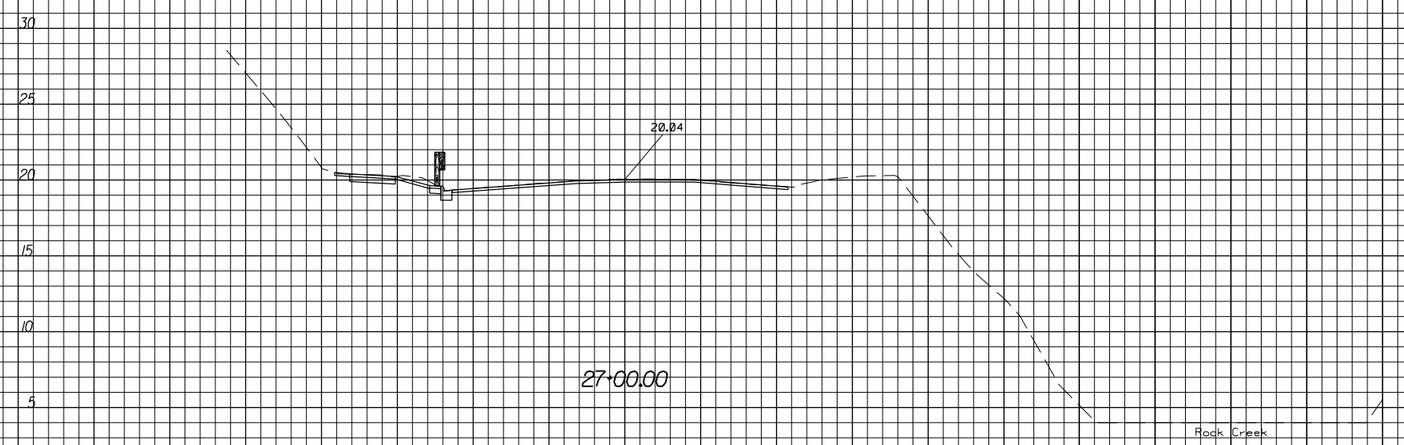

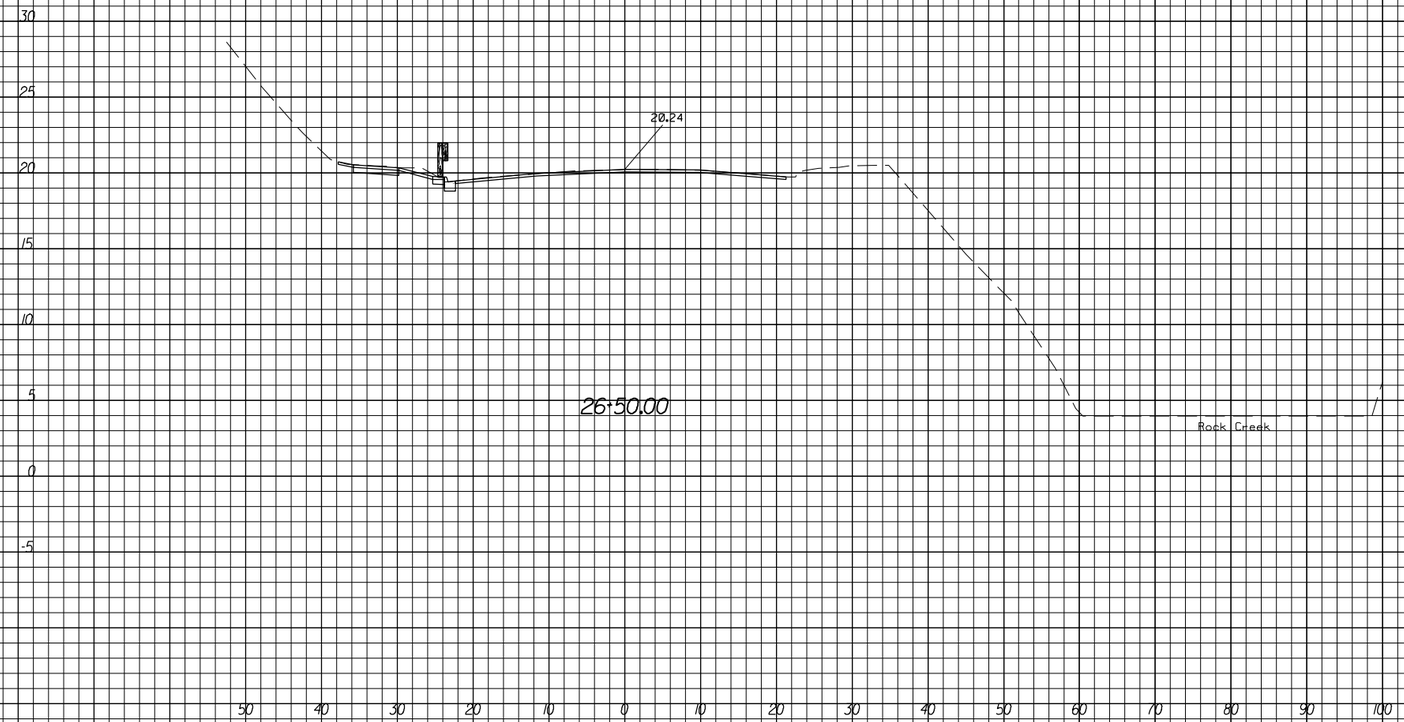

U.S. DEPARTMENT OF TRANSPORTATION
FEDERAL HIGHWAY ADMINISTRATION
EASTERN FEDERAL LANDS HIGHWAY DIVISION
STERLING, VIRGINIA

ROCK CREEK AND POTOMAC PARKWAY

CROSS SECTIONS

ROCK CREEK AND POTOMAC PARKWAY
STA. 26+50 TO STA. 27+00

9/8/2006 8:50:07 AM M:\Projects\rocr\3a5_204\proj_dev\Cadd\cs02rock.dgn

NPS	REG	STATE	PROJECT	SHEET NO.	TOTAL SHEETS
821 / 4192	NC	DC	PRA-ROCR 3A5, 204(1)	20	34

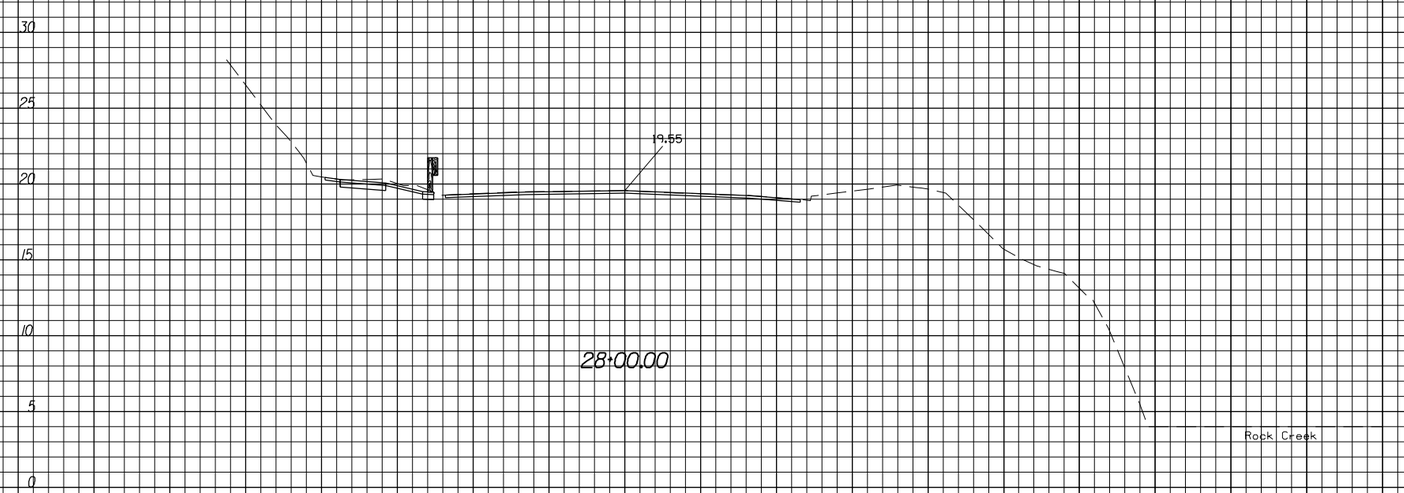

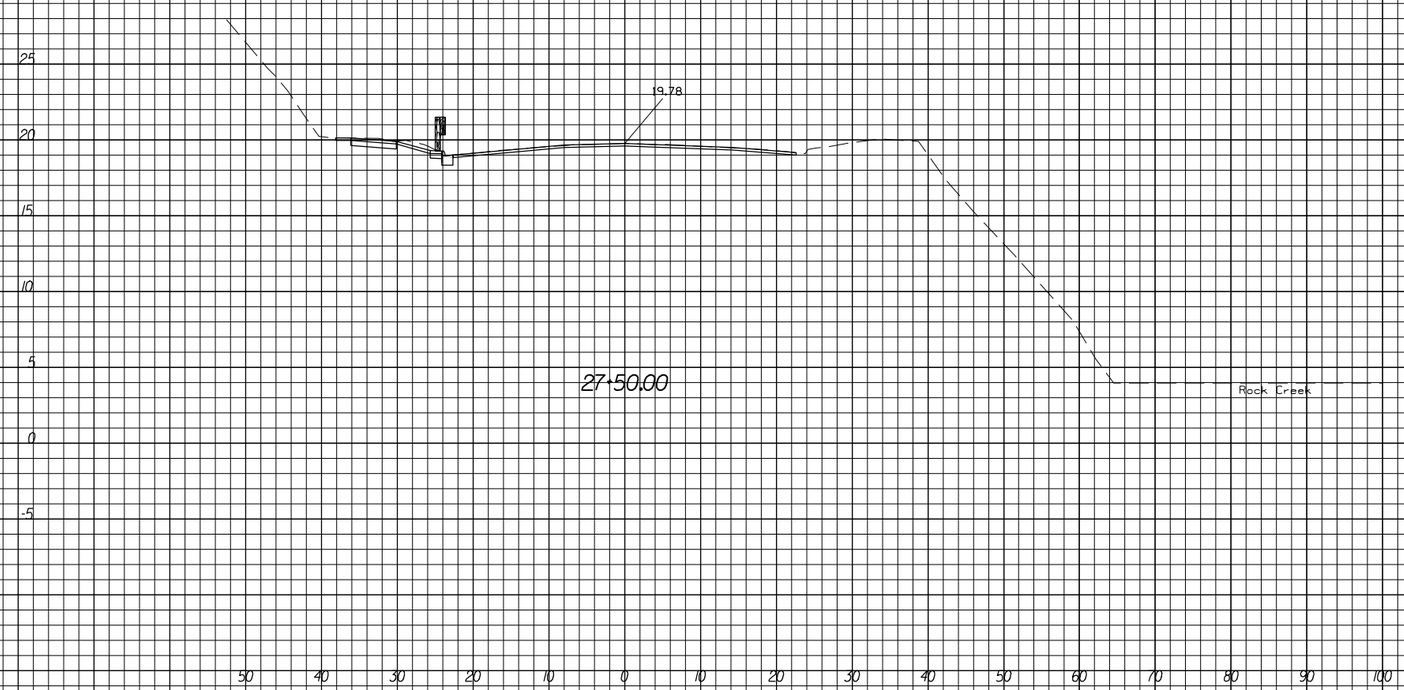

U.S. DEPARTMENT OF TRANSPORTATION
FEDERAL HIGHWAY ADMINISTRATION
EASTERN FEDERAL LANDS HIGHWAY DIVISION
STERLING, VIRGINIA

ROCK CREEK AND POTOMAC PARKWAY

CROSS SECTIONS

ROCK CREEK AND POTOMAC PARKWAY
STA. 27+50 TO STA. 28+00

9/8/2006 8:50:56 AM M:\Projects\rocr\3a5_204\proj_dev\Cadd\cs02rock.dgn

NPS	REG	STATE	PROJECT	SHEET NO.	TOTAL SHEETS
821 / 4192	NC	DC	PRA-ROCR 3A5, 204(1)	21	34

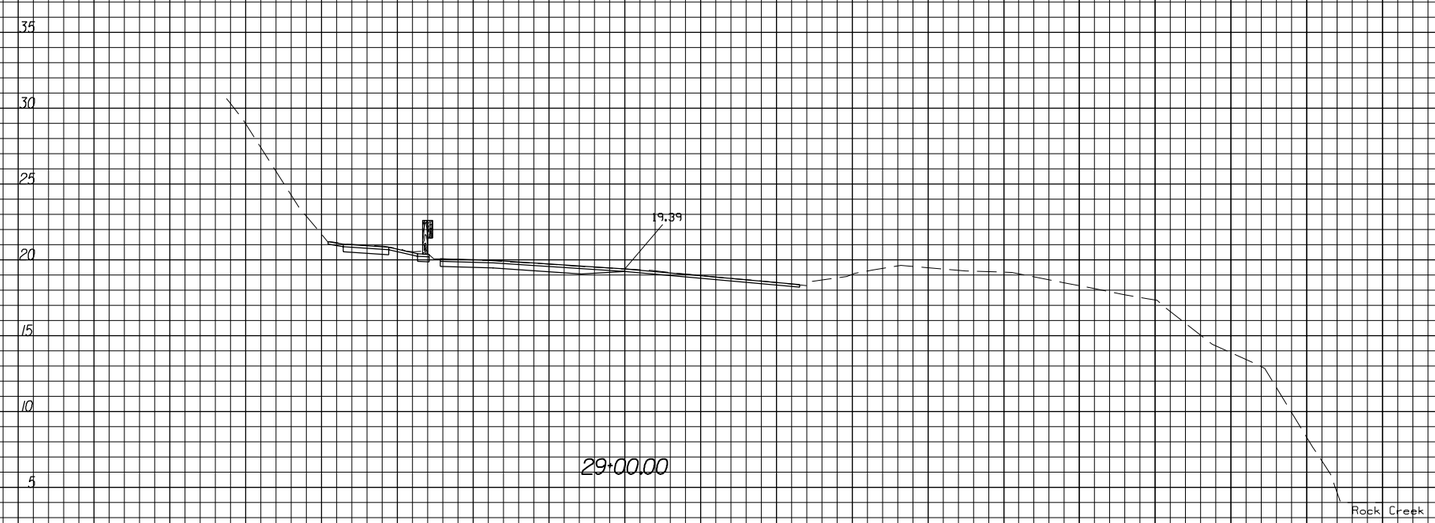

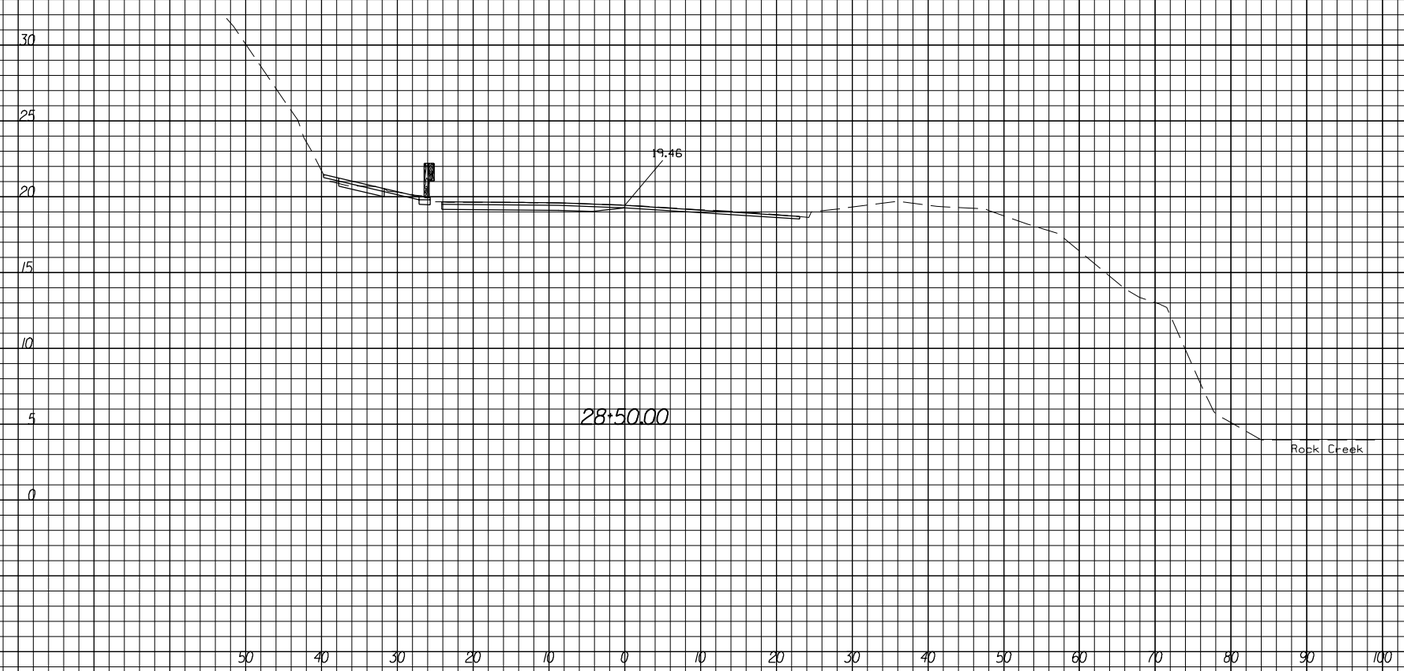

U.S. DEPARTMENT OF TRANSPORTATION
FEDERAL HIGHWAY ADMINISTRATION
EASTERN FEDERAL LANDS HIGHWAY DIVISION
STERLING, VIRGINIA

ROCK CREEK AND POTOMAC PARKWAY

CROSS SECTIONS

ROCK CREEK AND POTOMAC PARKWAY
STA. 28+50 TO STA. 29+00

9/8/2006 8:51:22 AM M:\Projects\rocr\3a5_204\proj_dev\Cadd\cs02rock.dgn

NPS	REG	STATE	PROJECT	SHEET NO.	TOTAL SHEETS
821/4192	NC	DC	PRA-ROCR 3A5, 204(1)	22	34

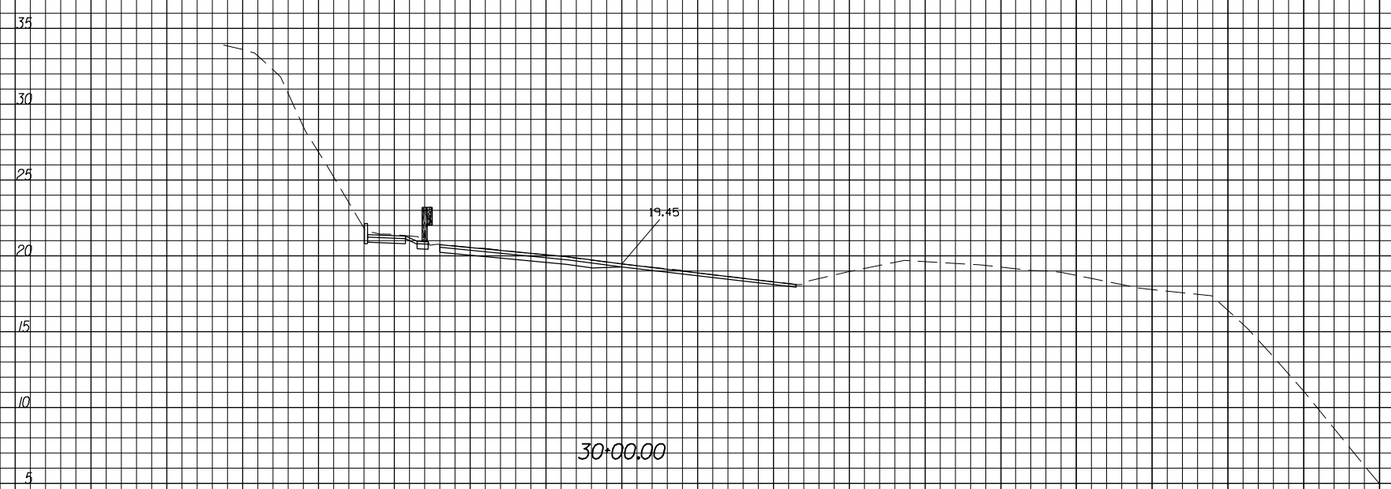

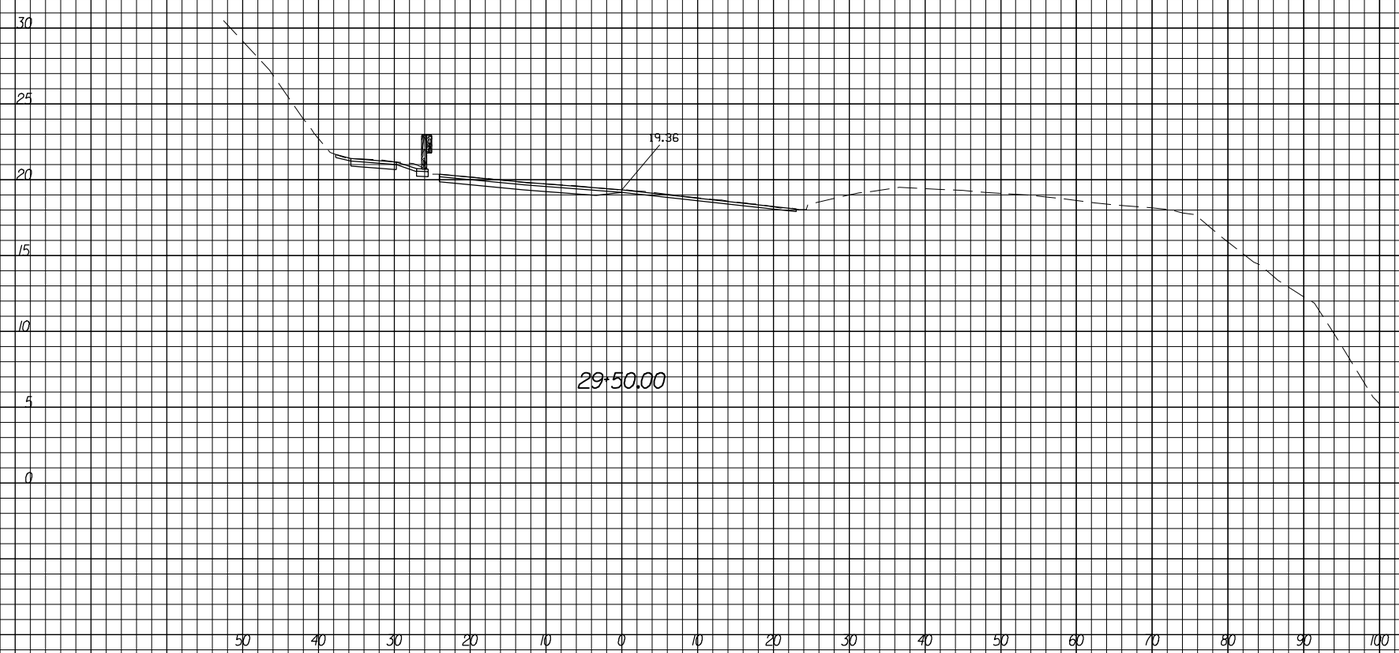

U.S. DEPARTMENT OF TRANSPORTATION
FEDERAL HIGHWAY ADMINISTRATION
EASTERN FEDERAL LANDS HIGHWAY DIVISION
STERLING, VIRGINIA

ROCK CREEK AND POTOMAC PARKWAY

CROSS SECTIONS

ROCK CREEK AND POTOMAC PARKWAY
STA. 29+50 TO STA. 30+00

9/8/2006 8:52:08 AM M:\Projects\roc\3a5_204\proj_dev\Cadd\cs02rock.dgn

NPS	REG	STATE	PROJECT	SHEET NO.	TOTAL SHEETS
821 / 4192	NC	DC	PRA-ROCR 3A5, 204(1)	23	34

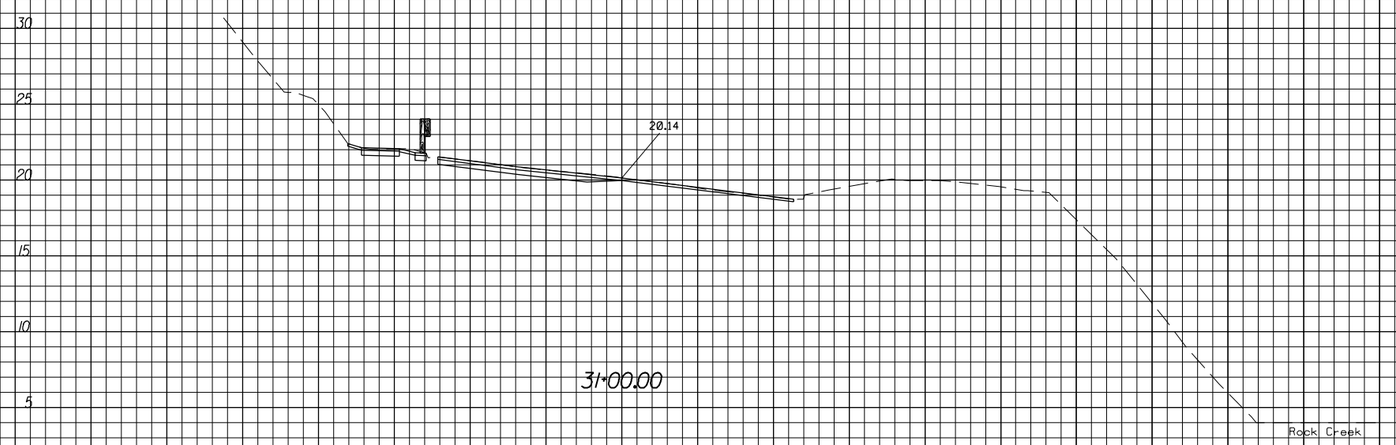

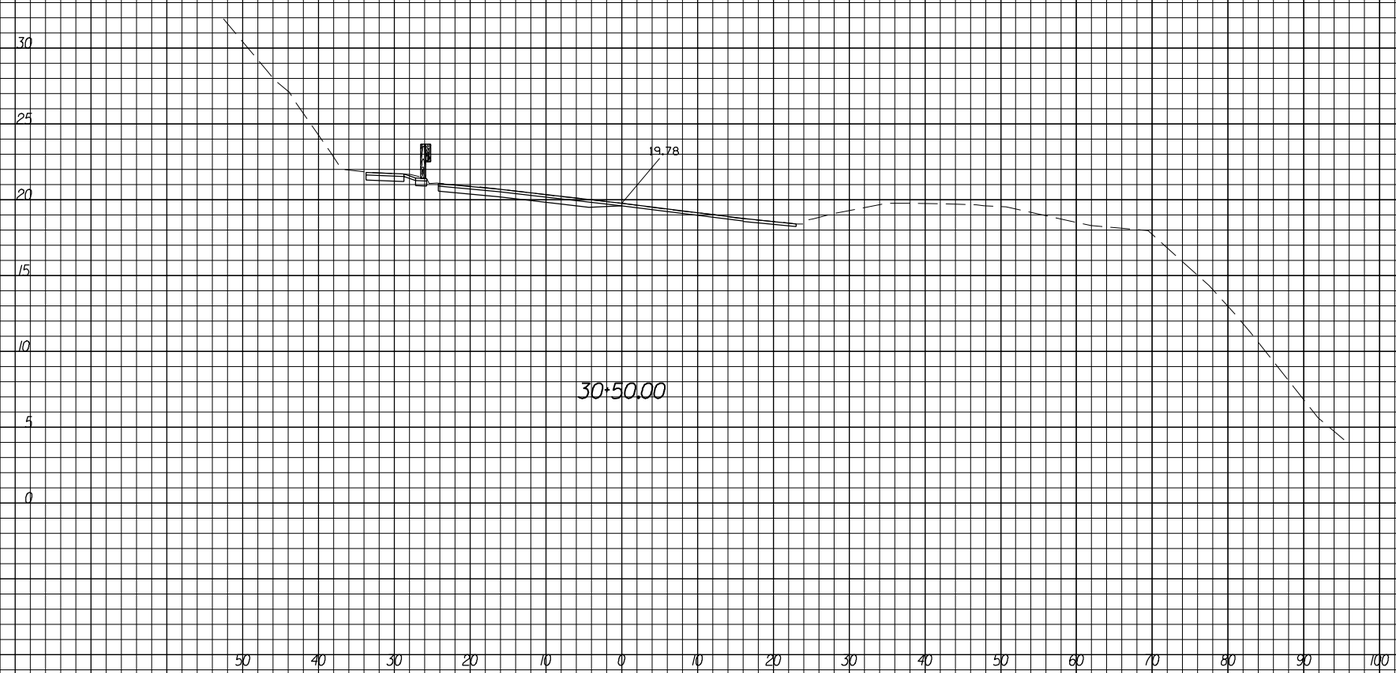

U.S. DEPARTMENT OF TRANSPORTATION
FEDERAL HIGHWAY ADMINISTRATION
EASTERN FEDERAL LANDS HIGHWAY DIVISION
STERLING, VIRGINIA

ROCK CREEK AND POTOMAC PARKWAY

CROSS SECTIONS

ROCK CREEK AND POTOMAC PARKWAY
STA. 30+50 TO STA. 31+00

9/8/2006 8:52:37 AM M:\Projects\roc\3a5_204\proj_dev\Cadd\cs02rock.dgn

NPS	REG	STATE	PROJECT	SHEET NO.	TOTAL SHEETS
821 / 4192	NC	DC	PRA-ROCR 3A5, 204(1)	24	34

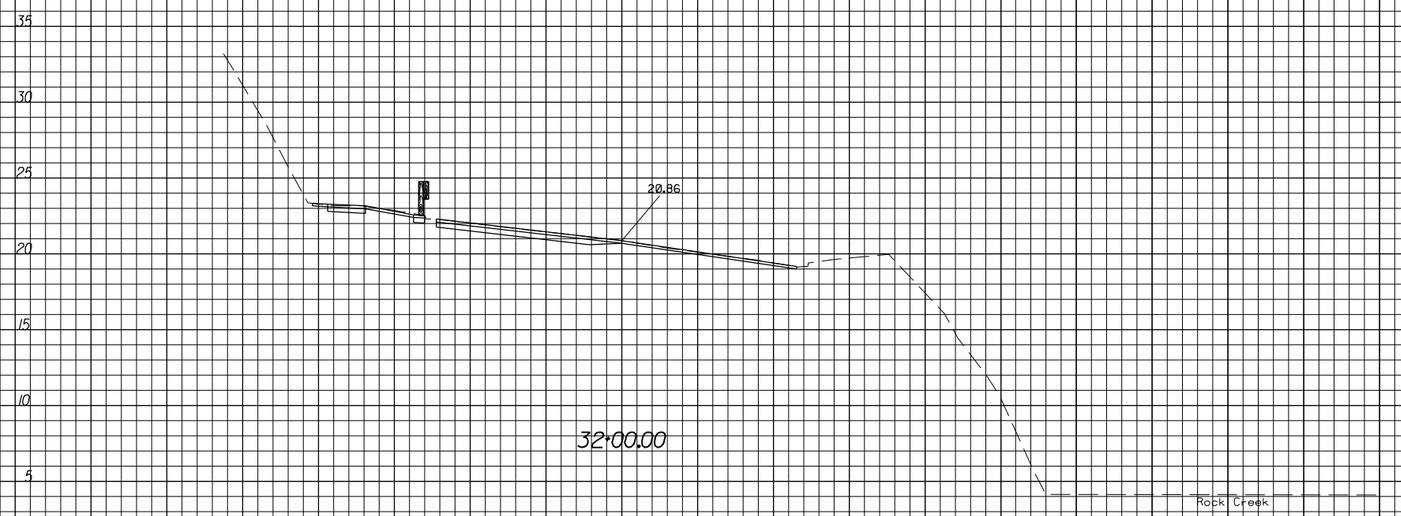

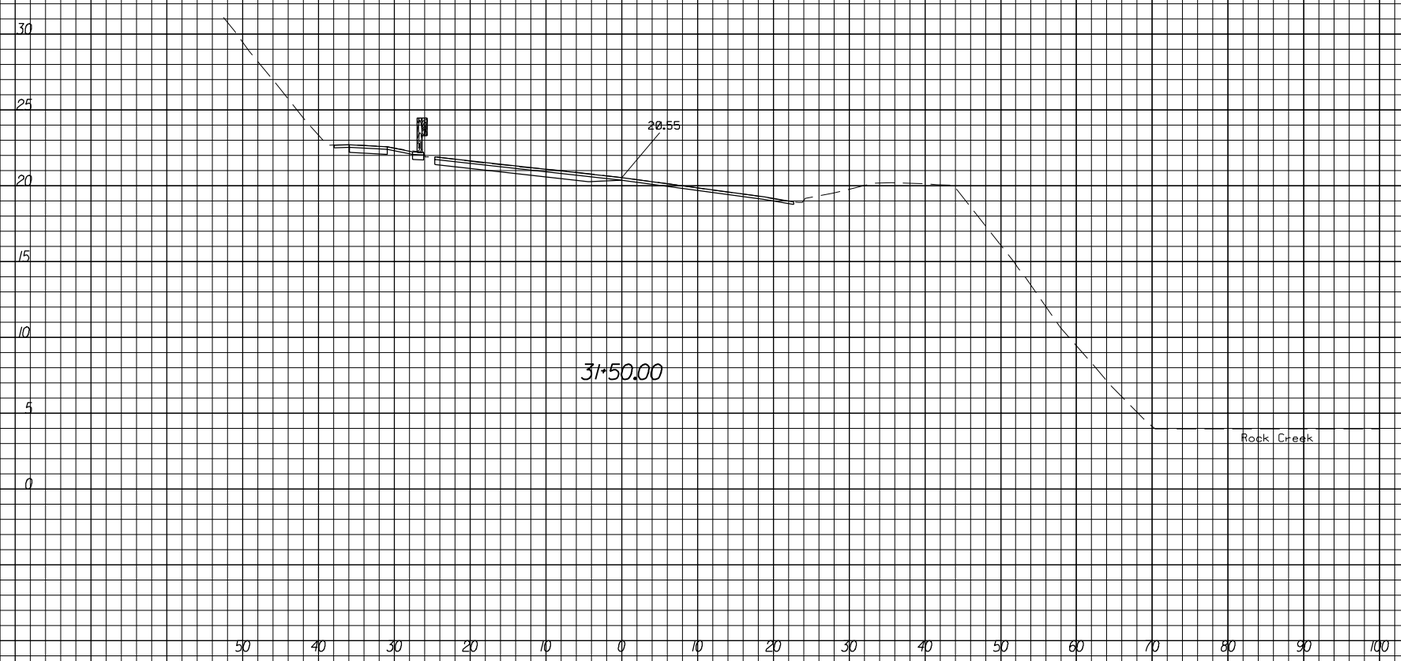

U.S. DEPARTMENT OF TRANSPORTATION
FEDERAL HIGHWAY ADMINISTRATION
EASTERN FEDERAL LANDS HIGHWAY DIVISION
STERLING, VIRGINIA

ROCK CREEK AND POTOMAC PARKWAY

CROSS SECTIONS

ROCK CREEK AND POTOMAC PARKWAY
STA. 31+50 TO STA. 32+00

9/8/2006 8:53:06 AM M:\Projects\rocr\3a5_204\proj_dev\Cadd\cs02rock.dgn

NPS	REG	STATE	PROJECT	SHEET NO.	TOTAL SHEETS
821 / 4192	NC	DC	PRA-ROCR 3A5, 204(1)	25	34

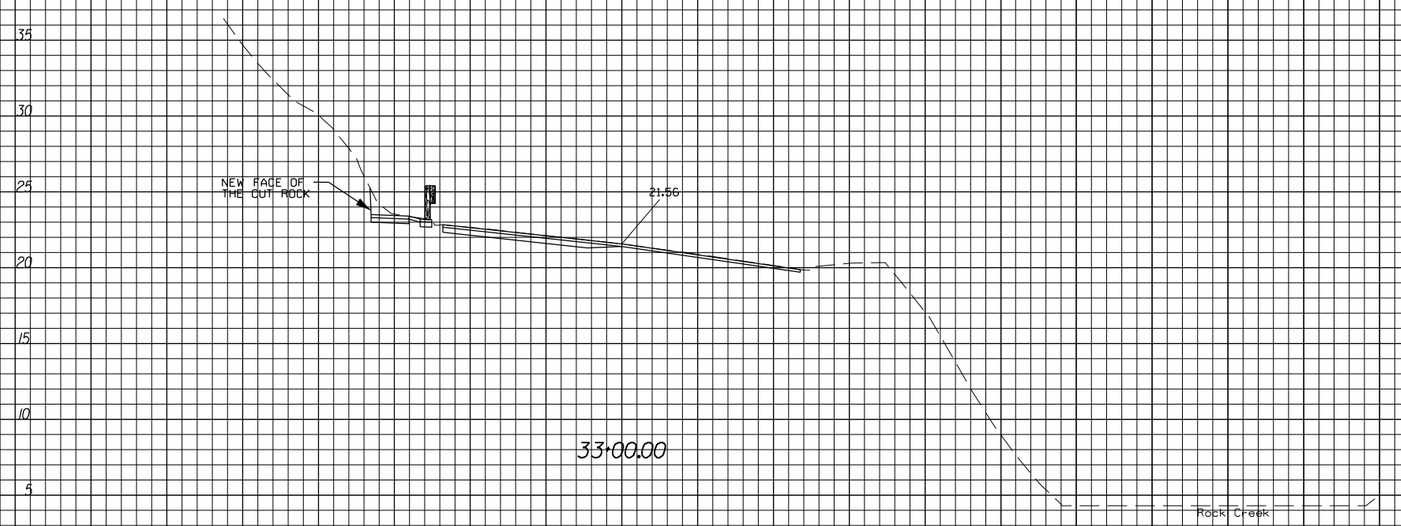

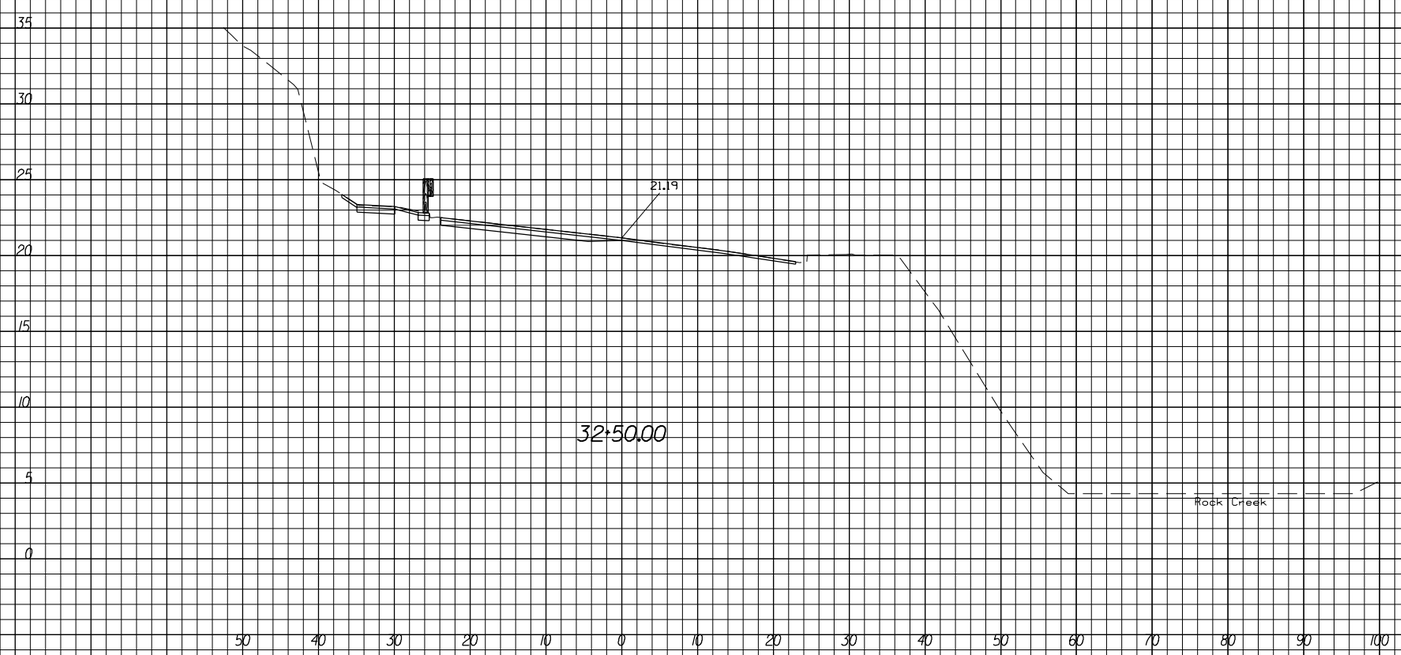

U.S. DEPARTMENT OF TRANSPORTATION
FEDERAL HIGHWAY ADMINISTRATION
EASTERN FEDERAL LANDS HIGHWAY DIVISION
STERLING, VIRGINIA

ROCK CREEK AND POTOMAC PARKWAY

CROSS SECTIONS

ROCK CREEK AND POTOMAC PARKWAY
STA. 32+50 TO STA. 33+00

9/8/2006 8:53:49 AM M:\Projects\rocr\3a5_204\proj_dev\Cadd\cs02rock.dgn

NPS	REG	STATE	PROJECT	SHEET NO.	TOTAL SHEETS
821/4192	NC	DC	PRA-ROCR 3A5, 204(1)	26	34

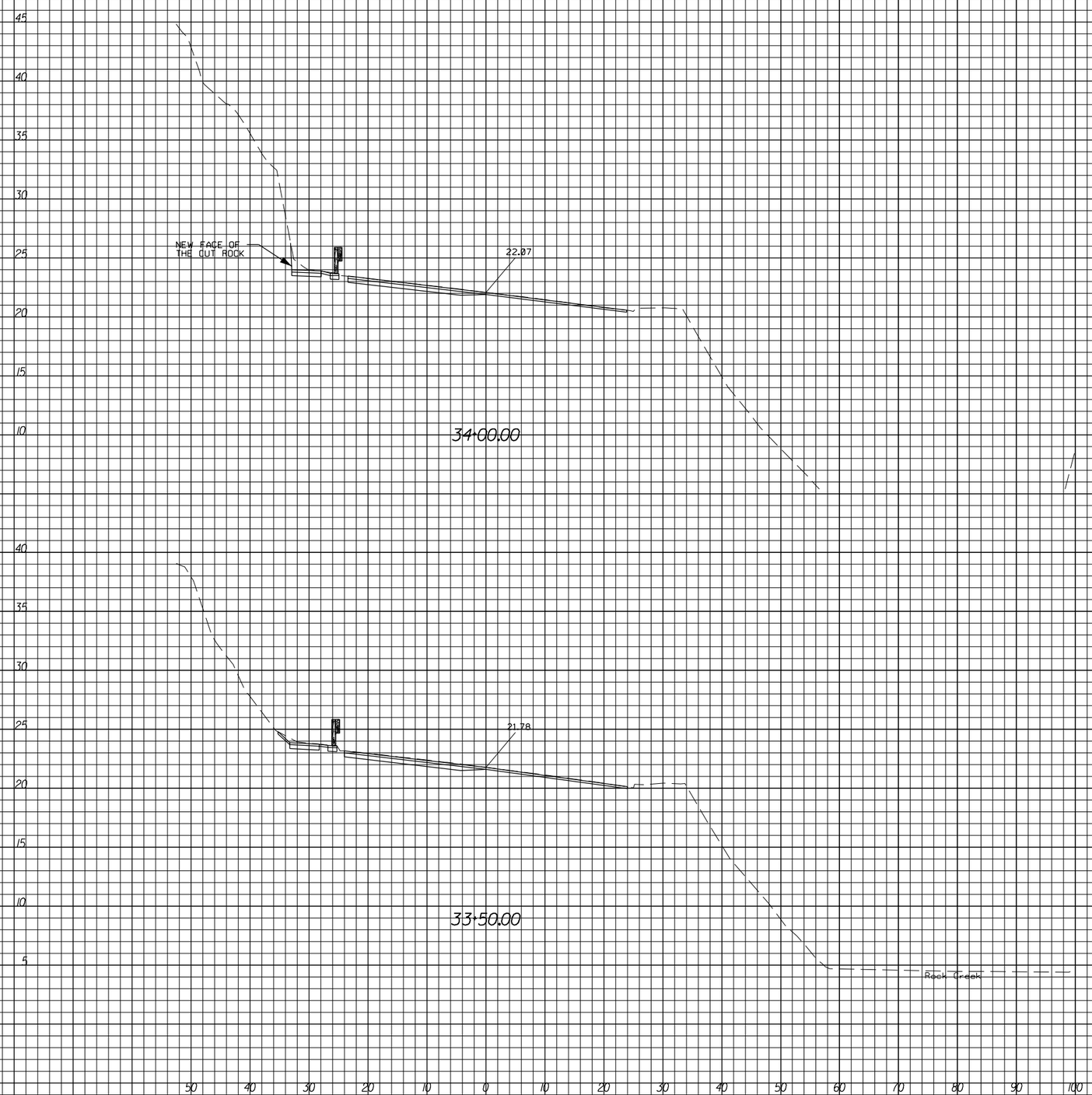

U.S. DEPARTMENT OF TRANSPORTATION
FEDERAL HIGHWAY ADMINISTRATION
EASTERN FEDERAL LANDS HIGHWAY DIVISION
STERLING, VIRGINIA

ROCK CREEK AND POTOMAC PARKWAY

CROSS SECTIONS

ROCK CREEK AND POTOMAC PARKWAY
STA. 33+50 TO STA. 34+00

9/8/2006 8:54:21 AM M:\Projects\rocr\3a5_204\proj_dev\Cadd\cs02rock.dgn

NPS	REG	STATE	PROJECT	SHEET NO.	TOTAL SHEETS
821/4192	NC	DC	PRA-ROCR 3A5, 204(1)	27	34

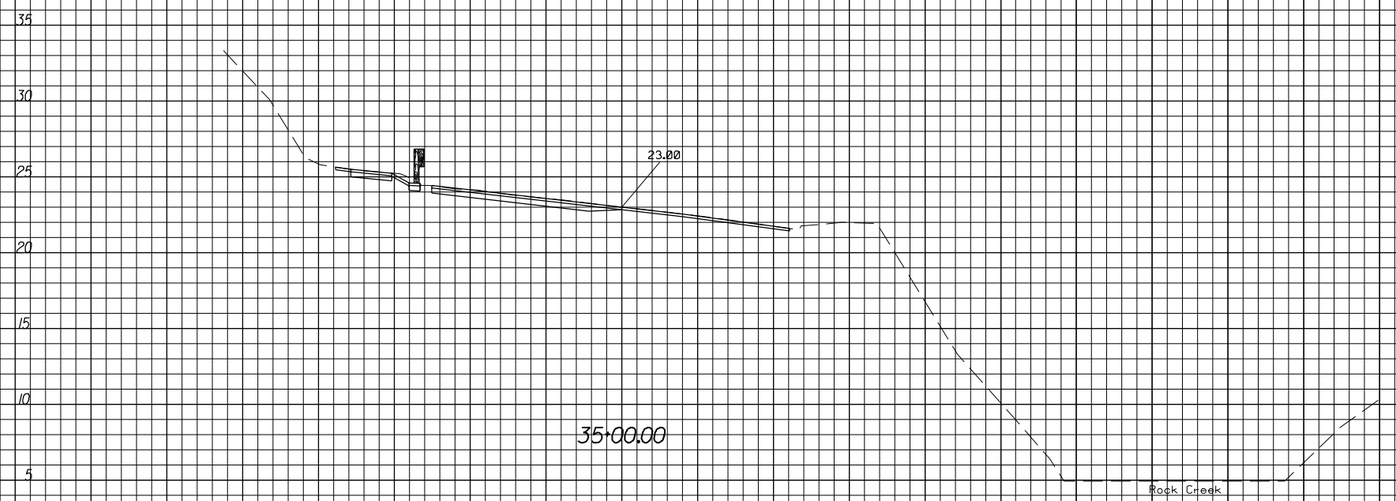

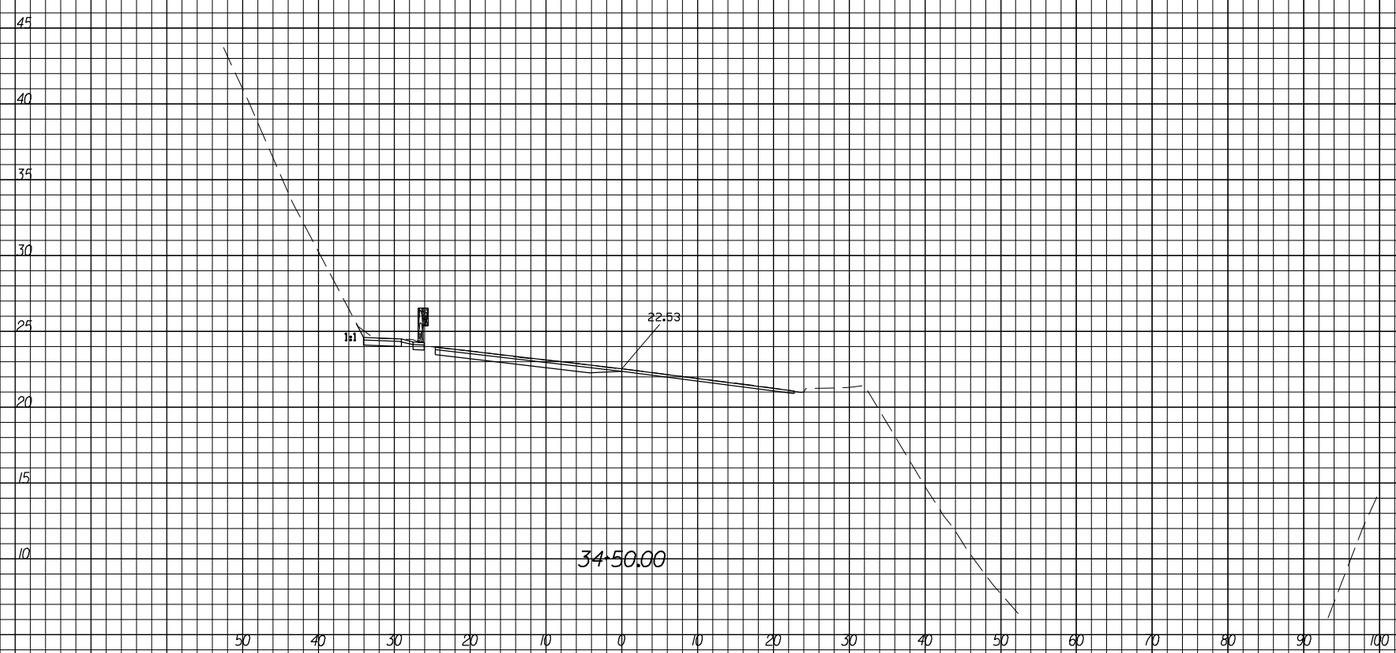

U.S. DEPARTMENT OF TRANSPORTATION
FEDERAL HIGHWAY ADMINISTRATION
EASTERN FEDERAL LANDS HIGHWAY DIVISION
STERLING, VIRGINIA

ROCK CREEK AND POTOMAC PARKWAY

CROSS SECTIONS

ROCK CREEK AND POTOMAC PARKWAY
STA. 34+50 TO STA. 35+00

9/8/2006 8:54:54 AM M:\Projects\rocr\3a5_204\proj_dev\Cadd\cs02rock.dgn

NPS	REG	STATE	PROJECT	SHEET NO.	TOTAL SHEETS
821 / 4192	NC	DC	PRA-ROCR 3A5, 204(1)	28	34

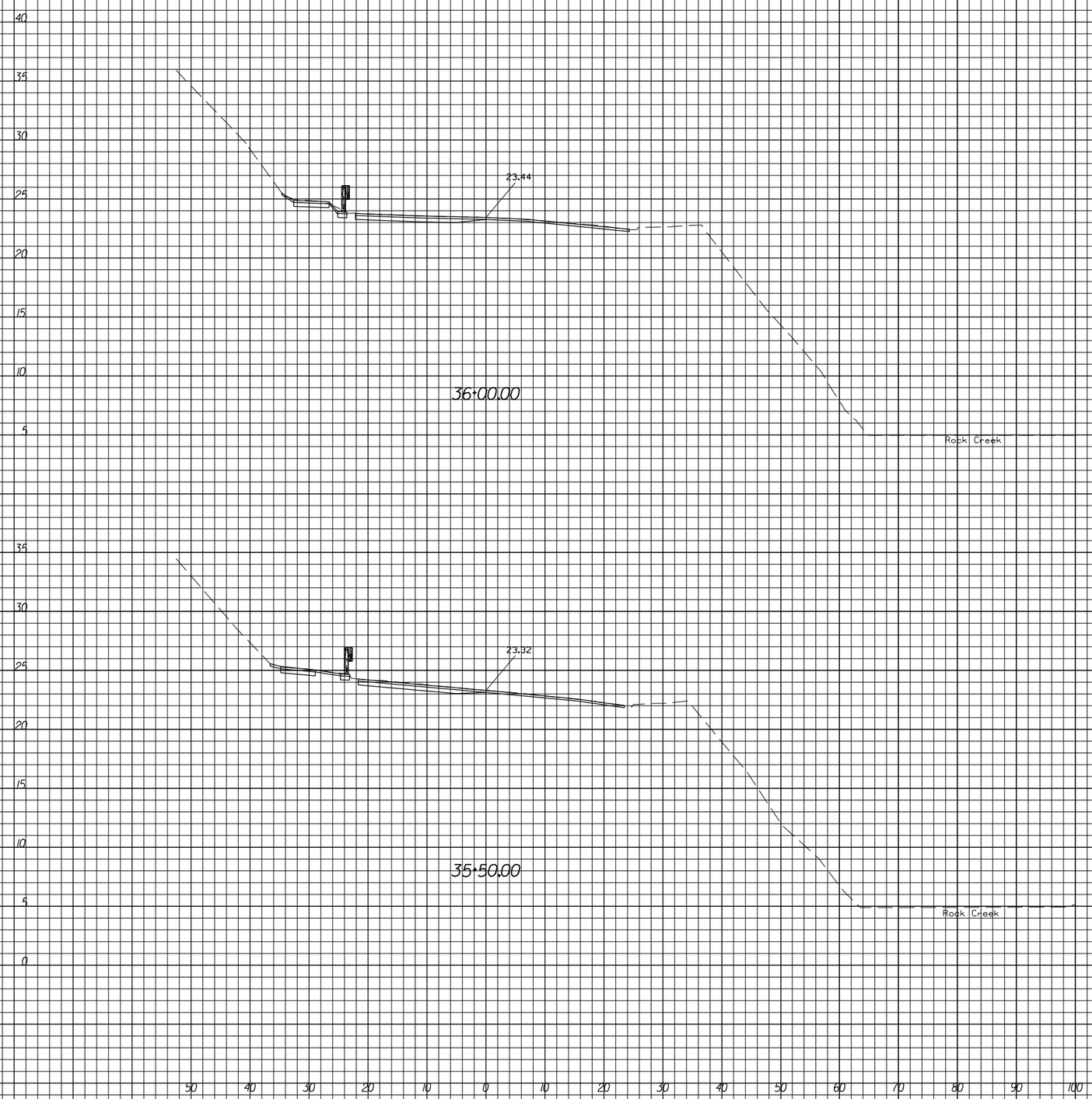

U.S. DEPARTMENT OF TRANSPORTATION
FEDERAL HIGHWAY ADMINISTRATION
EASTERN FEDERAL LANDS HIGHWAY DIVISION
STERLING, VIRGINIA

ROCK CREEK AND POTOMAC PARKWAY

CROSS SECTIONS

ROCK CREEK AND POTOMAC PARKWAY
STA. 35+50 TO STA. 36+00

9/8/2006 8:55:26 AM M:\Projects\rocr\3a5_204\proj_dev\Cadd\cs02rock.dgn

NPS	REG	STATE	PROJECT	SHEET NO.	TOTAL SHEETS
821/4192	NC	DC	PRA-ROCR 3A5, 204(1)	29	34

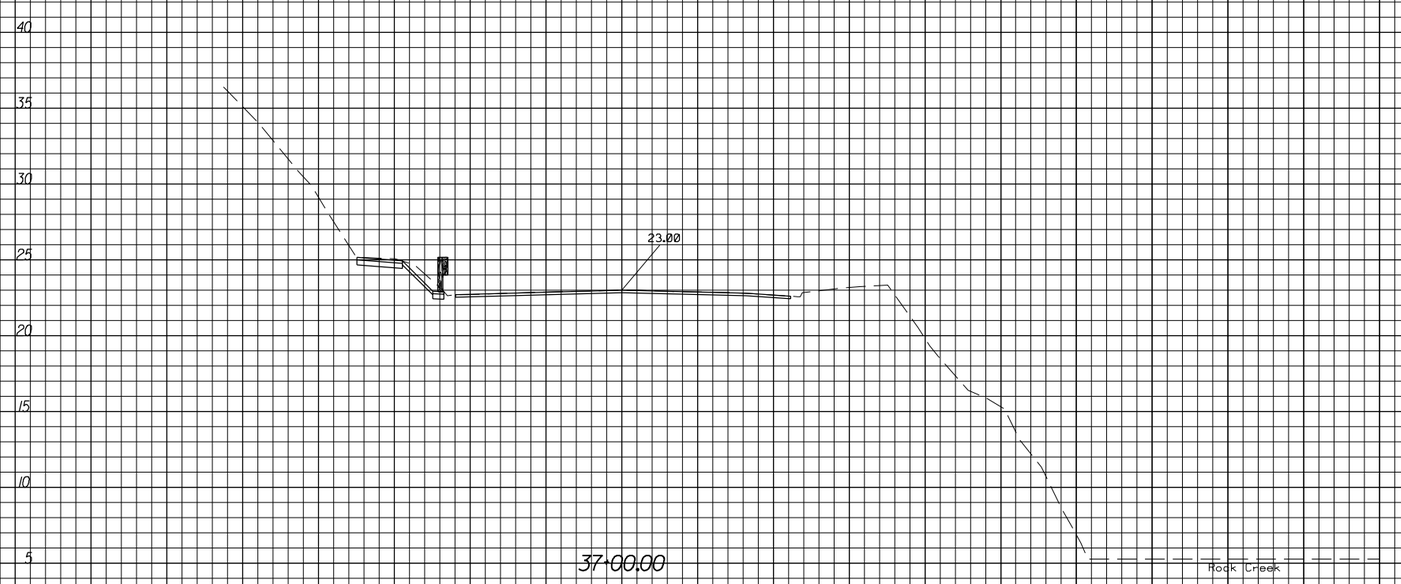

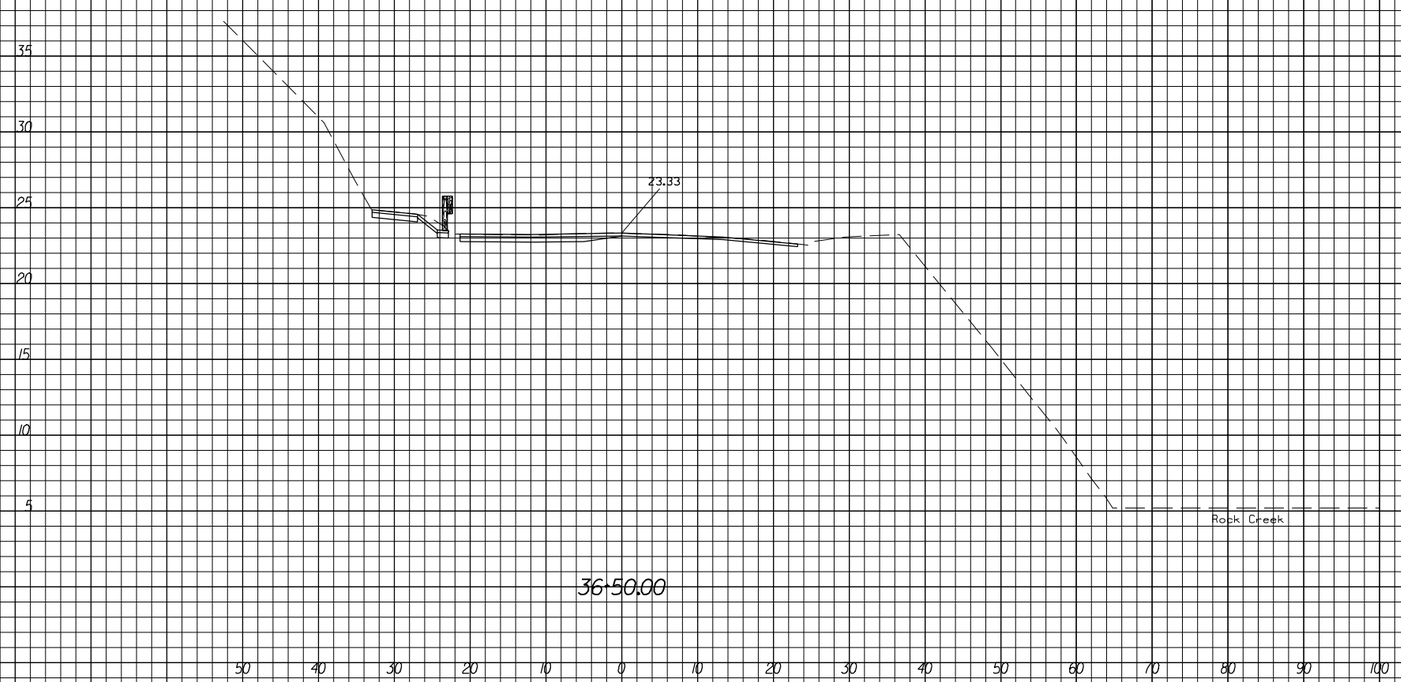

U.S. DEPARTMENT OF TRANSPORTATION
FEDERAL HIGHWAY ADMINISTRATION
EASTERN FEDERAL LANDS HIGHWAY DIVISION
STERLING, VIRGINIA

ROCK CREEK AND POTOMAC PARKWAY

CROSS SECTIONS

ROCK CREEK AND POTOMAC PARKWAY
STA. 36+50 TO STA. 37+00

9/8/2006 8:55:50 AM M:\Projects\rocr\3a5_204\proj_dev\Cadd\cs02rock.dgn

NPS	REG	STATE	PROJECT	SHEET NO.	TOTAL SHEETS
821 / 4192	NC	DC	PRA-ROCR 3A5, 204(1)	30	34

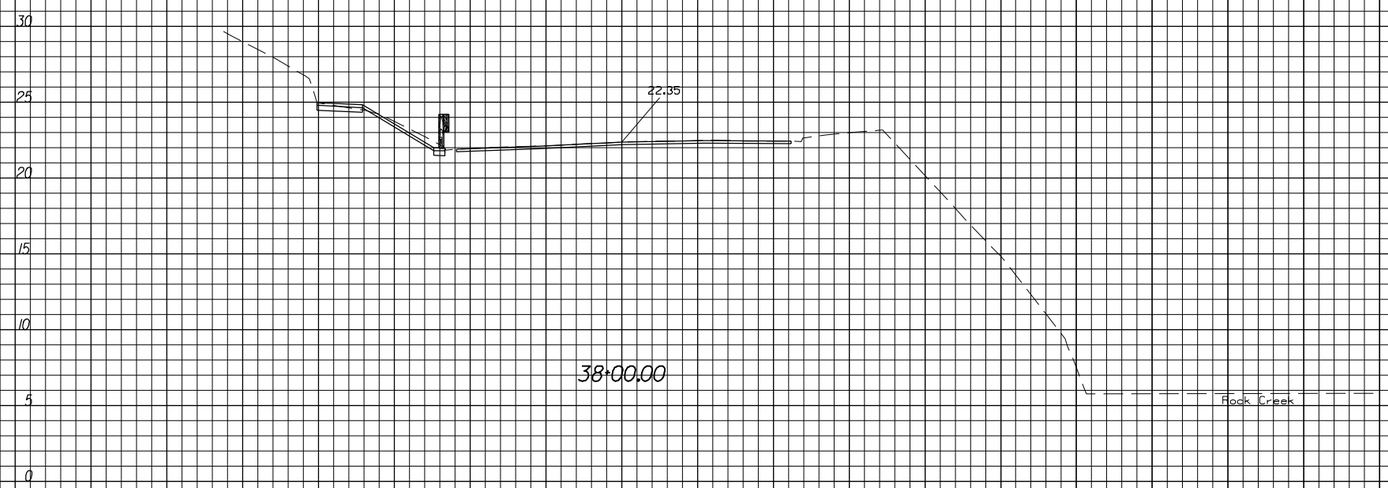

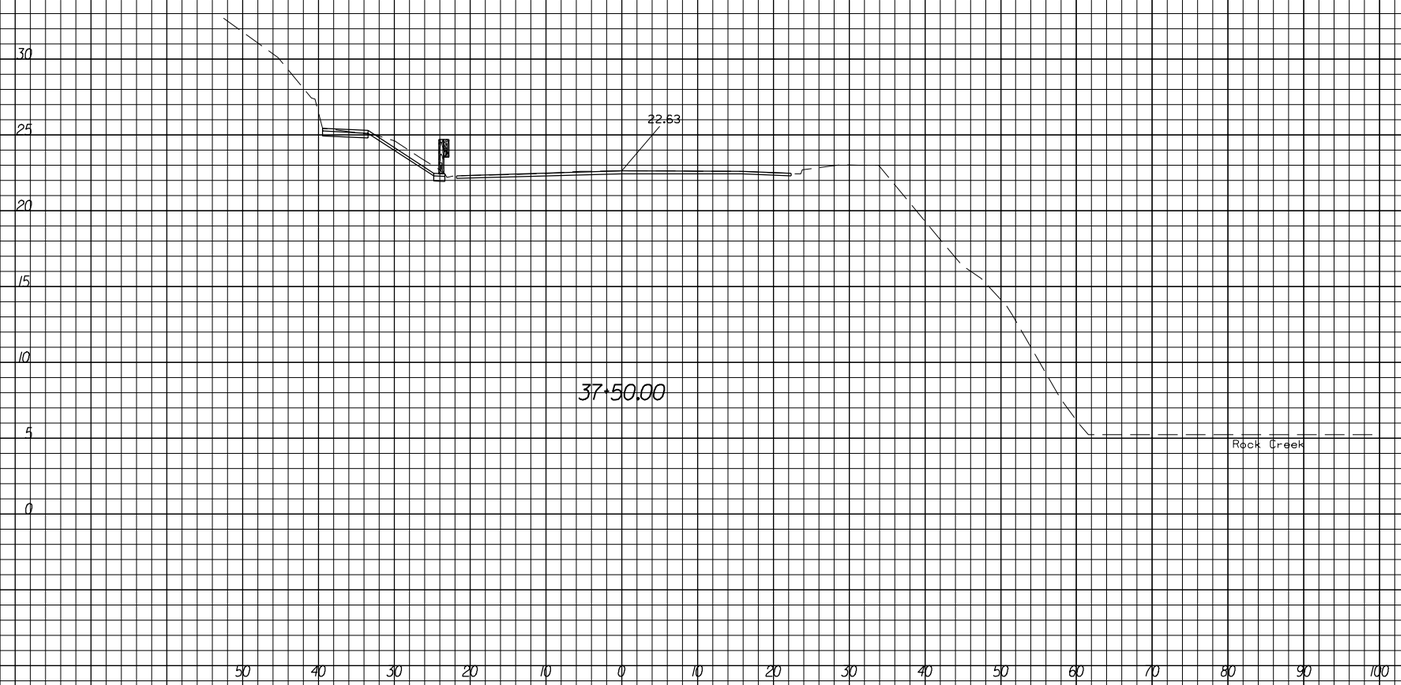

U.S. DEPARTMENT OF TRANSPORTATION
FEDERAL HIGHWAY ADMINISTRATION
EASTERN FEDERAL LANDS HIGHWAY DIVISION
STERLING, VIRGINIA

ROCK CREEK AND POTOMAC PARKWAY

CROSS SECTIONS

ROCK CREEK AND POTOMAC PARKWAY
STA. 37+50 TO STA. 38+00

9/8/2006 8:56:33 AM M:\Projects\roc\3a5_204\proj_dev\Cadd\cs02rock.dgn

NPS	REG	STATE	PROJECT	SHEET NO.	TOTAL SHEETS
821/4192	NC	DC	PRA-ROCR 3A5, 204(1)	31	34

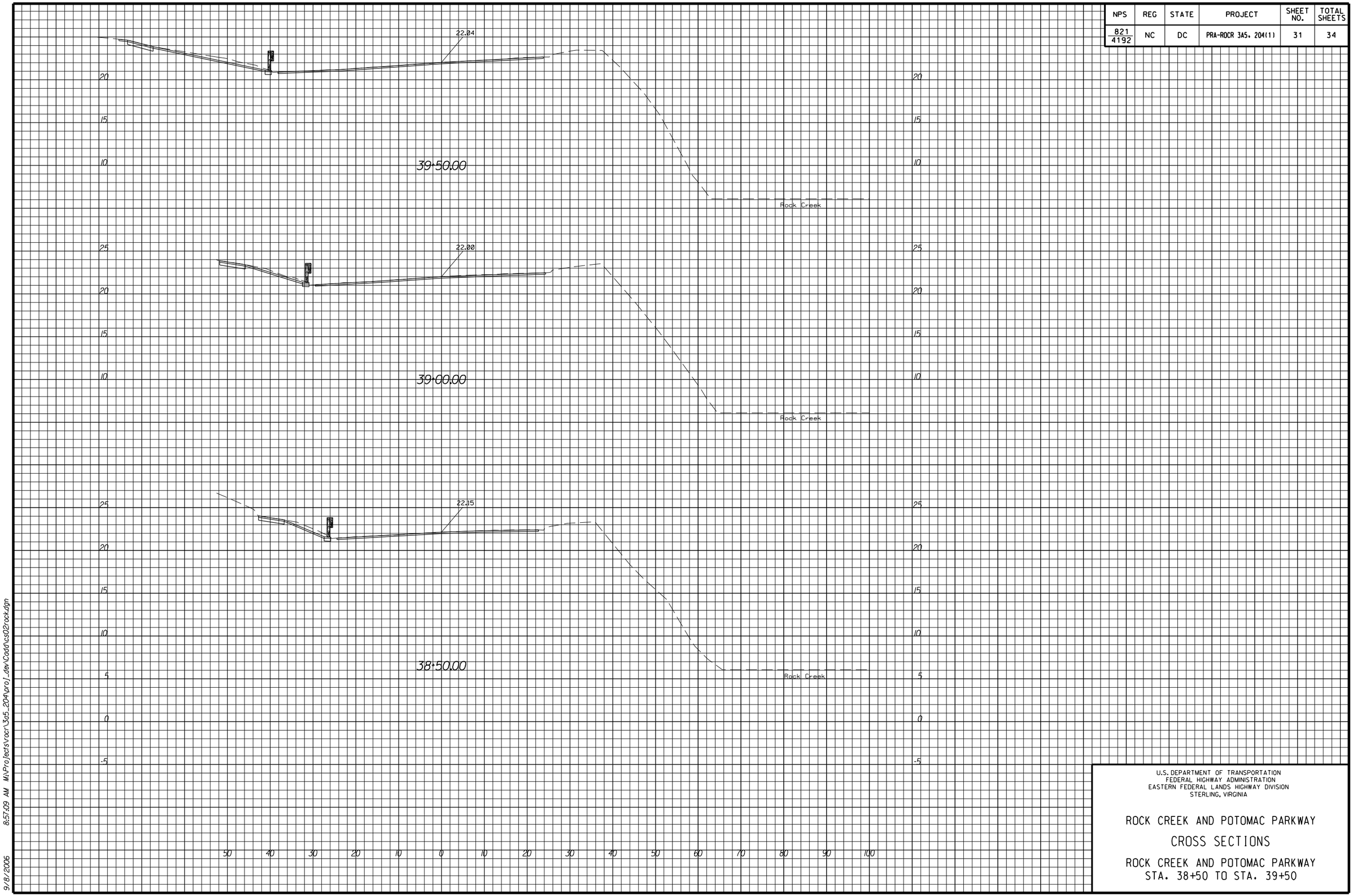

U.S. DEPARTMENT OF TRANSPORTATION
FEDERAL HIGHWAY ADMINISTRATION
EASTERN FEDERAL LANDS HIGHWAY DIVISION
STERLING, VIRGINIA

ROCK CREEK AND POTOMAC PARKWAY

CROSS SECTIONS

ROCK CREEK AND POTOMAC PARKWAY
STA. 38+50 TO STA. 39+50

9/8/2006 8:57:09 AM M:\Projects\rocr\3a5_204\proj_dev\Cadd\cs02rock.dgn

NPS	REG	STATE	PROJECT	SHEET NO.	TOTAL SHEETS
821 / 4192	NC	DC	PRA-ROCR 3A5, 204(1)	32	34

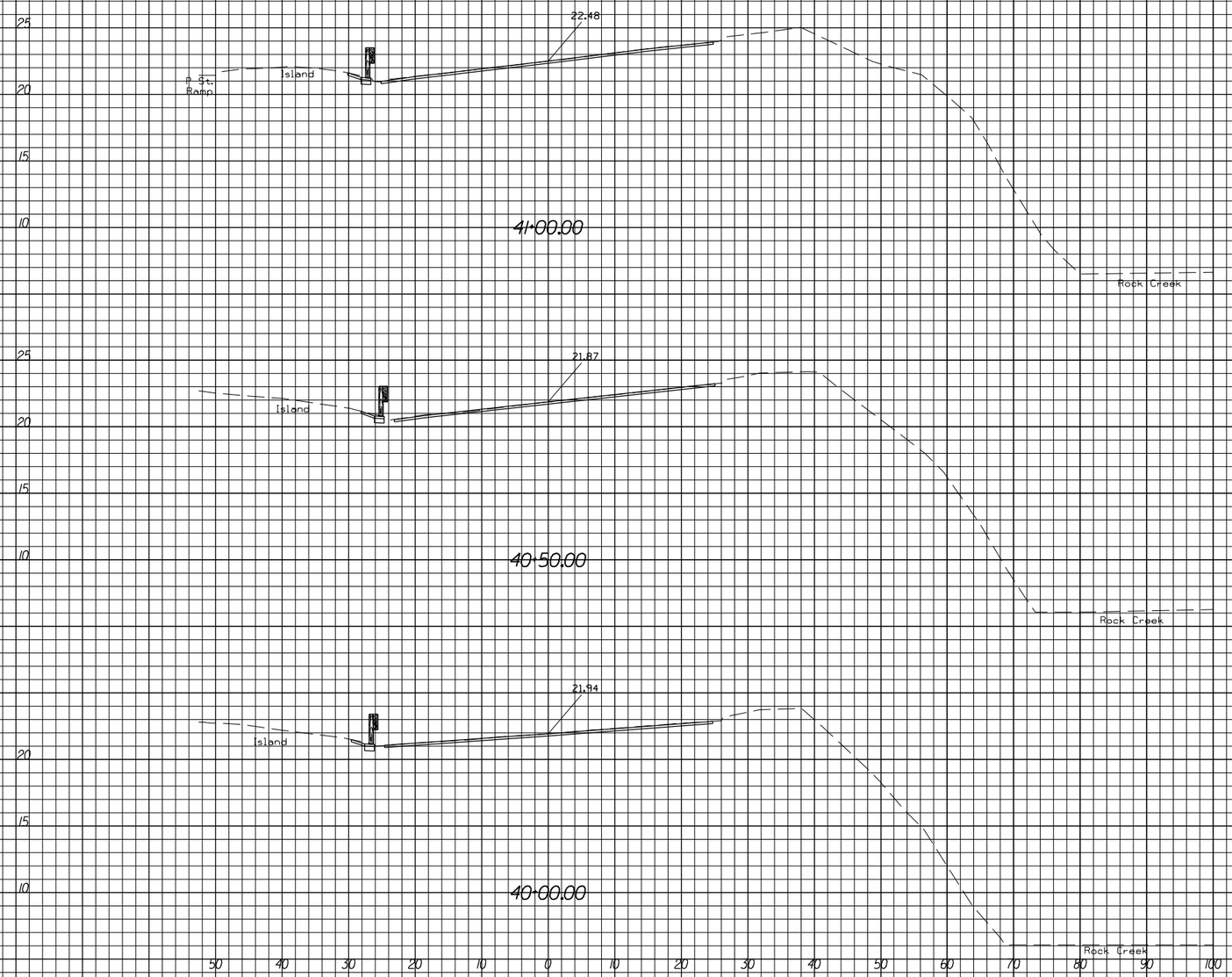

U.S. DEPARTMENT OF TRANSPORTATION
FEDERAL HIGHWAY ADMINISTRATION
EASTERN FEDERAL LANDS HIGHWAY DIVISION
STERLING, VIRGINIA

ROCK CREEK AND POTOMAC PARKWAY

CROSS SECTIONS

ROCK CREEK AND POTOMAC PARKWAY
STA. 40+00 TO STA. 41+00

9/8/2006 8:57:36 AM M:\Projects\rocr\3a5_204\proj_dev\Cadd\cs02rock.dgn

NPS	REG	STATE	PROJECT	SHEET NO.	TOTAL SHEETS
821/4192	NC	DC	PRA-ROCR 3A5, 204(1)	33	34

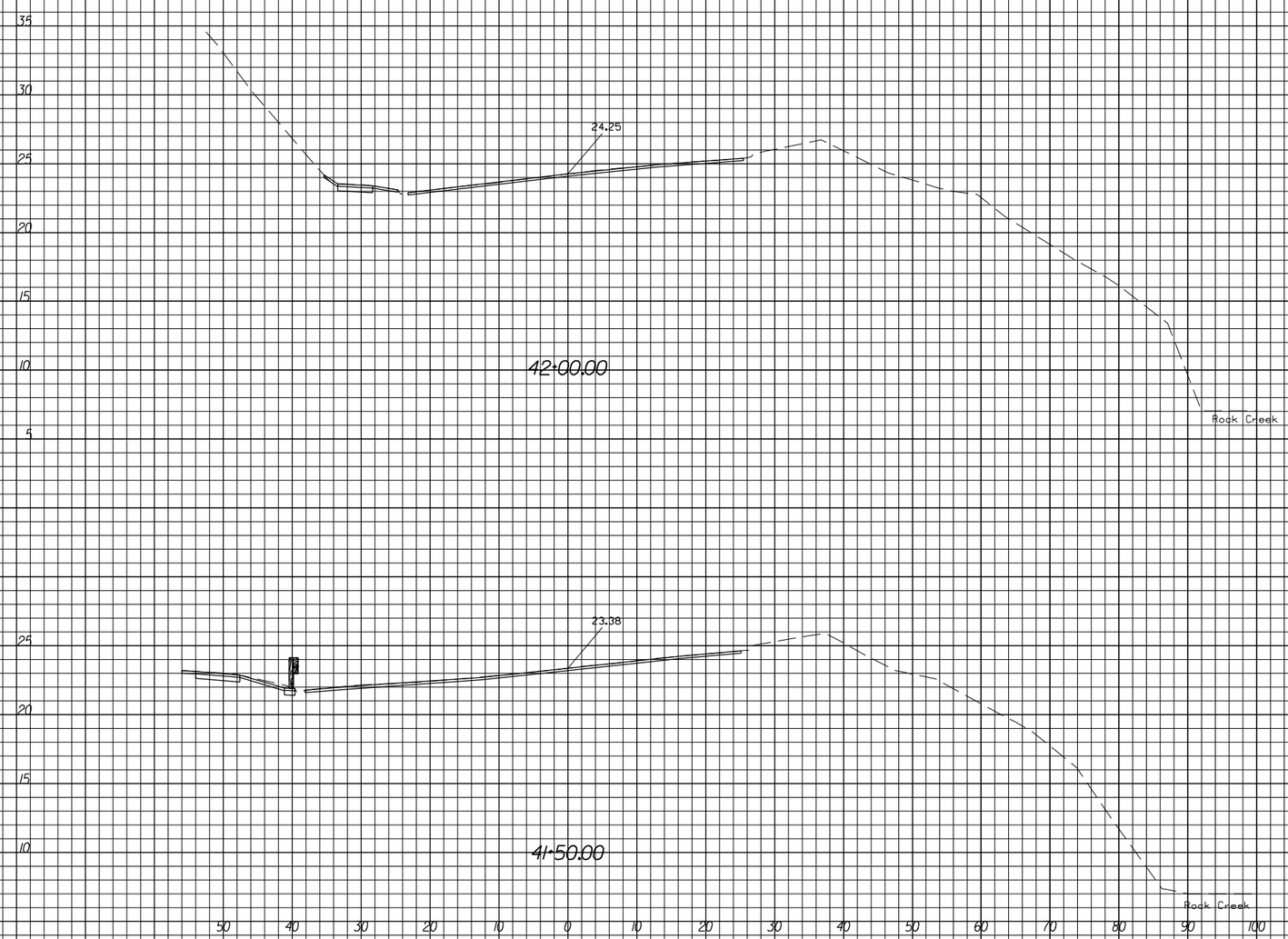

U.S. DEPARTMENT OF TRANSPORTATION
FEDERAL HIGHWAY ADMINISTRATION
EASTERN FEDERAL LANDS HIGHWAY DIVISION
STERLING, VIRGINIA

ROCK CREEK AND POTOMAC PARKWAY

CROSS SECTIONS

ROCK CREEK AND POTOMAC PARKWAY
STA. 41+50 TO STA. 42+00

9/8/2006 8:58:05 AM M:\Projects\rocr\3a5_204\proj_dev\Cadd\cs02rock.dgn

NPS	REG	STATE	PROJECT	SHEET NO.	TOTAL SHEETS
821/4192	NC	DC	PRA-ROCR 3A5, 204(1)	34	34

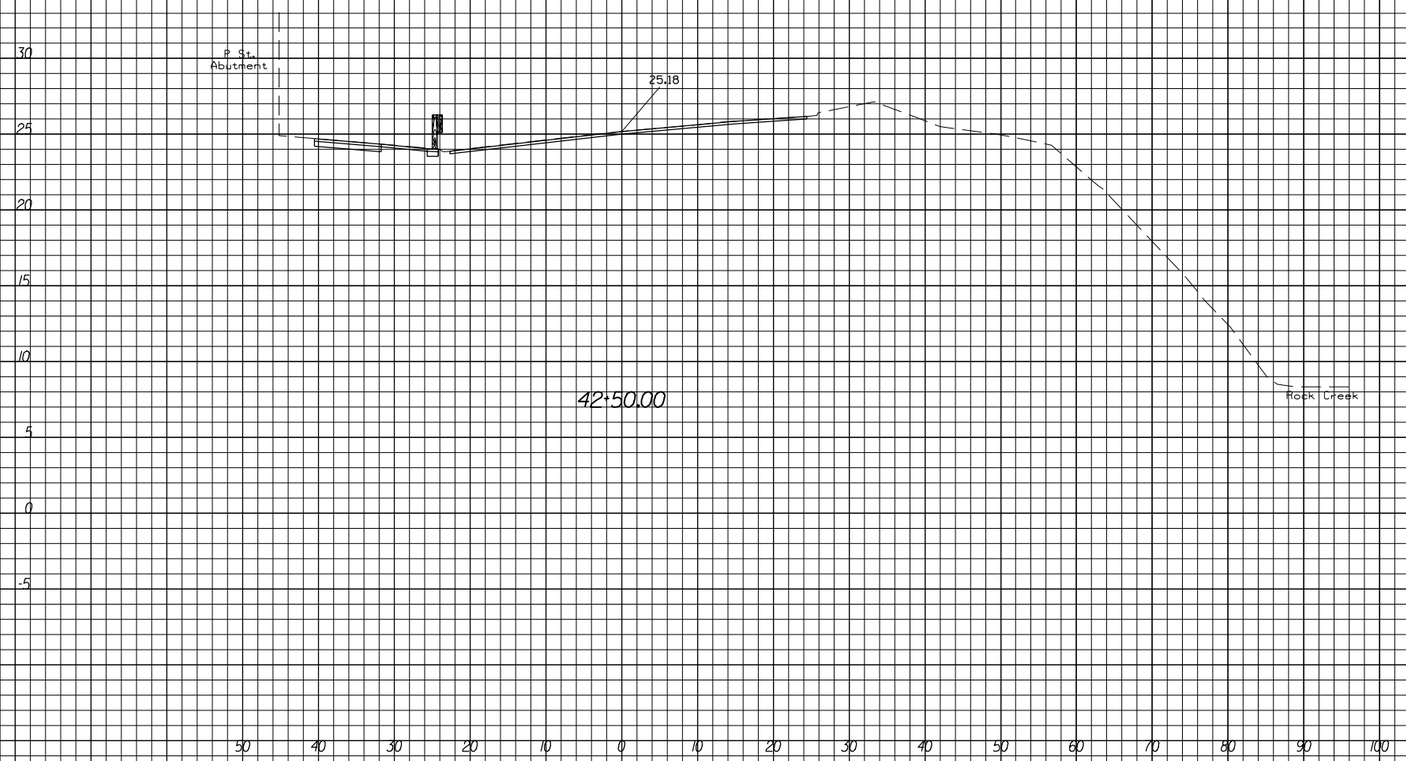

U.S. DEPARTMENT OF TRANSPORTATION
FEDERAL HIGHWAY ADMINISTRATION
EASTERN FEDERAL LANDS HIGHWAY DIVISION
STERLING, VIRGINIA

ROCK CREEK AND POTOMAC PARKWAY

CROSS SECTIONS

ROCK CREEK AND POTOMAC PARKWAY
STA. 42+50

9/8/2006 8:58:55 AM M:\Projects\rocr\3a5_204\proj_dev\Cadd\cs02rock.dgn

NPS	REG	STATE	PROJECT	SHEET NO.	TOTAL SHEETS
821 41920	NC	DC	PRA-ROCR 3/6, 204(1)	1	1

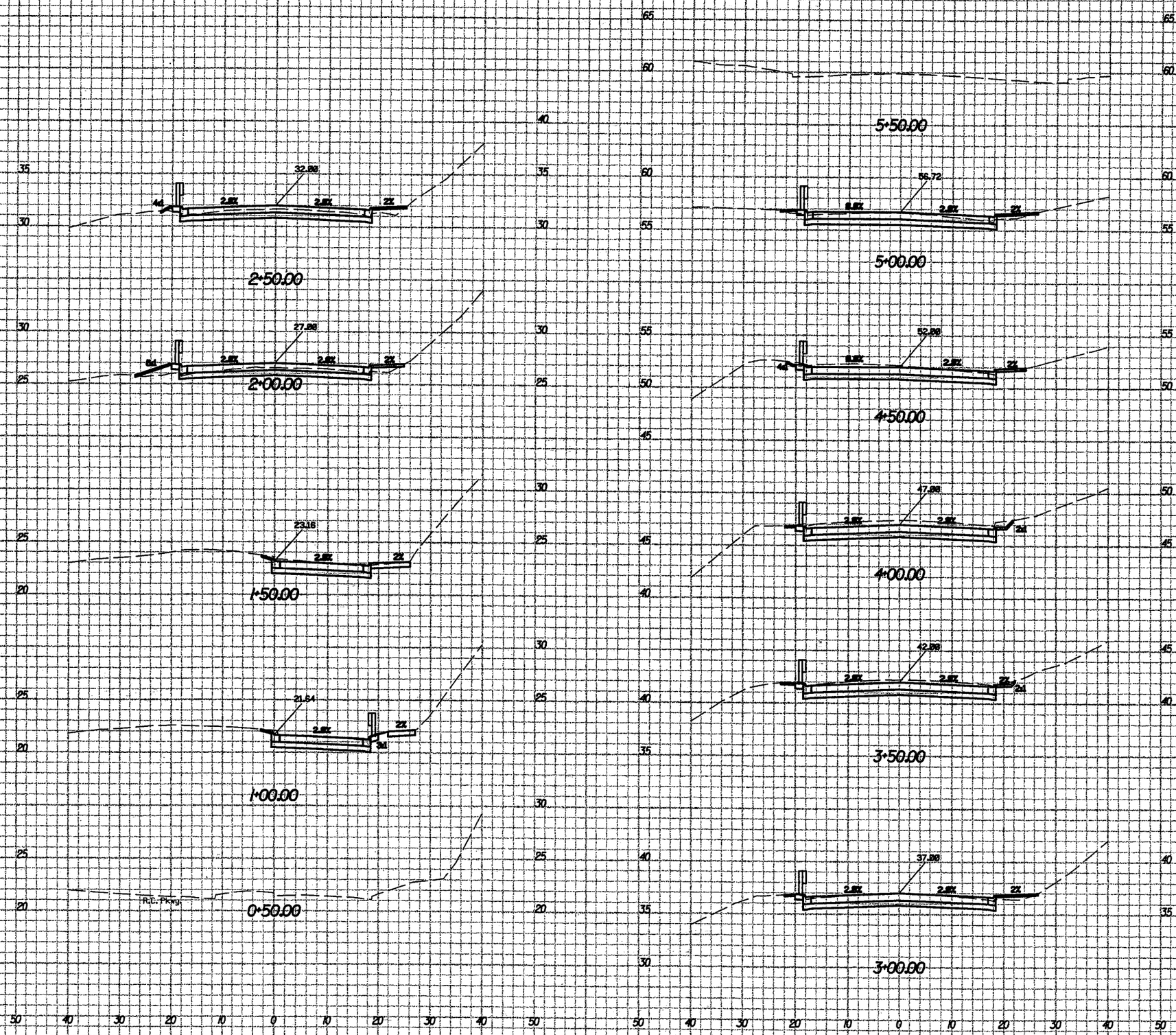

U.S. DEPARTMENT OF TRANSPORTATION
FEDERAL HIGHWAY ADMINISTRATION
EASTERN FEDERAL LANDS HIGHWAY DIVISION
STERLING, VIRGINIA

ROCK CREEK AND POTOMAC PARKWAY

CROSS SECTIONS

'P' STREET RAMP
STA. 0+50 TO STA. 5+50

...\cs02rock.dgn 5/31/2006 2:16:42 PM