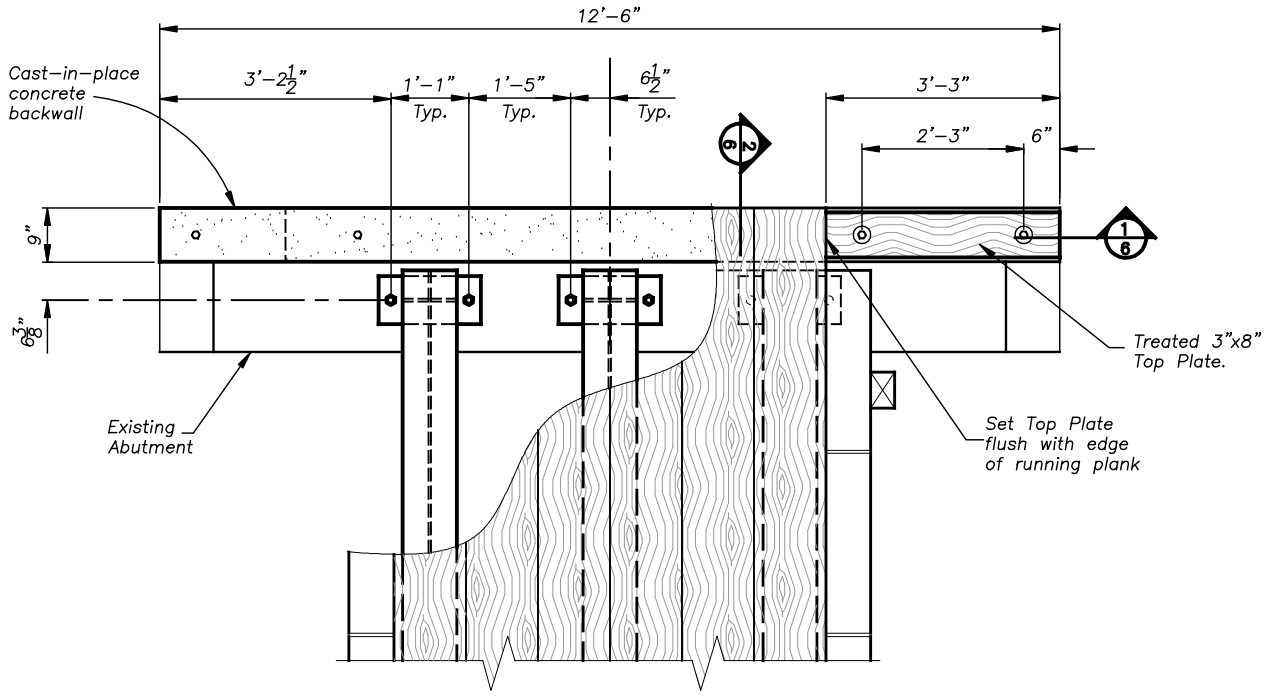

PLAN

Scale: 3/8" = 1'-0"

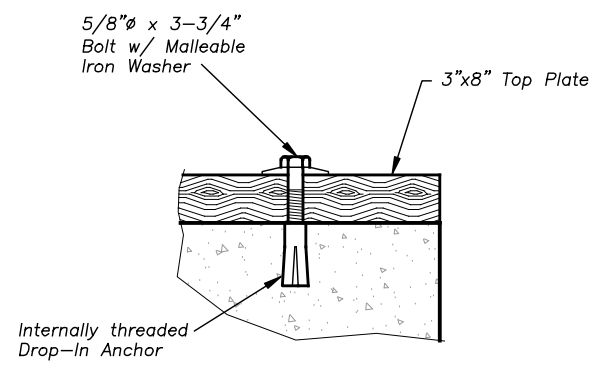

1/6 SECTION

Not to Scale

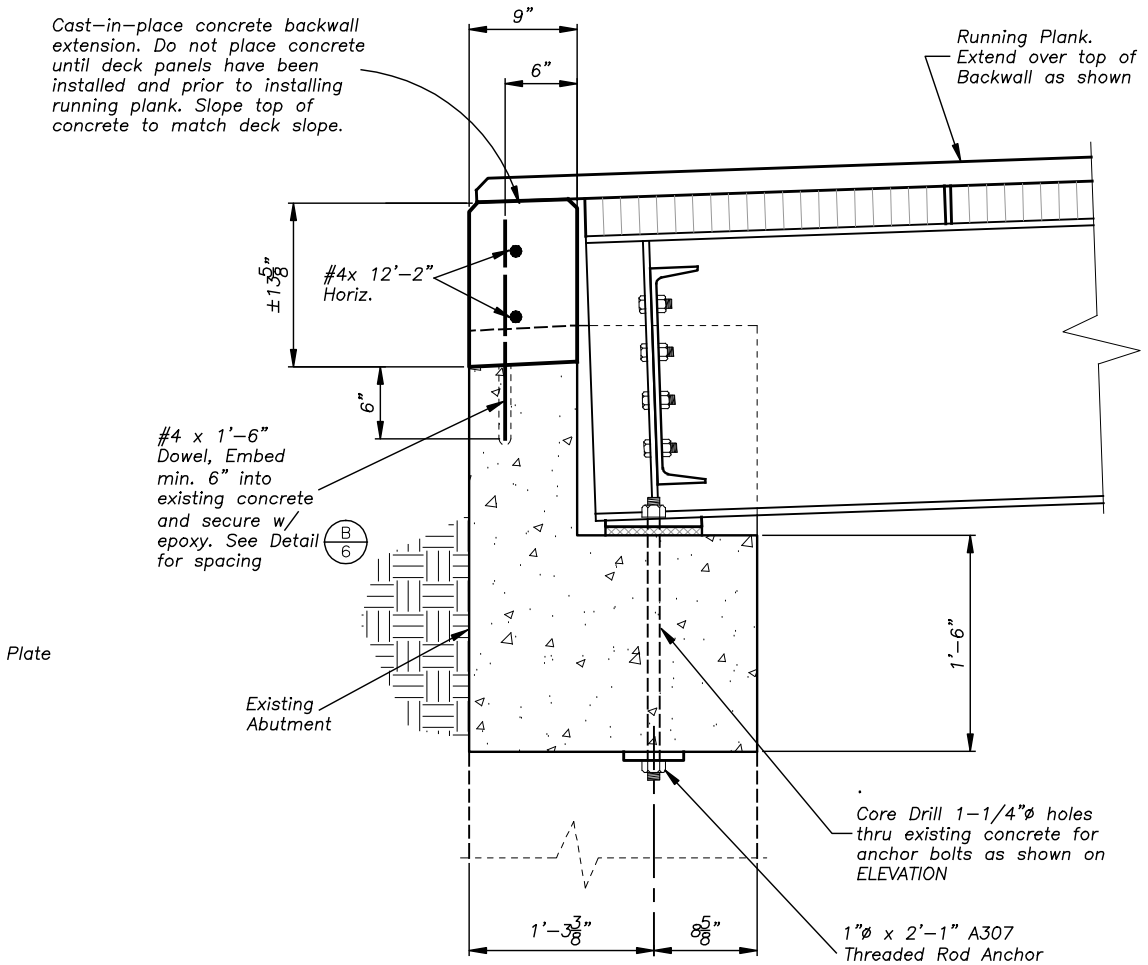

2/6 SECTION

Scale: 3/4" = 1'-0"

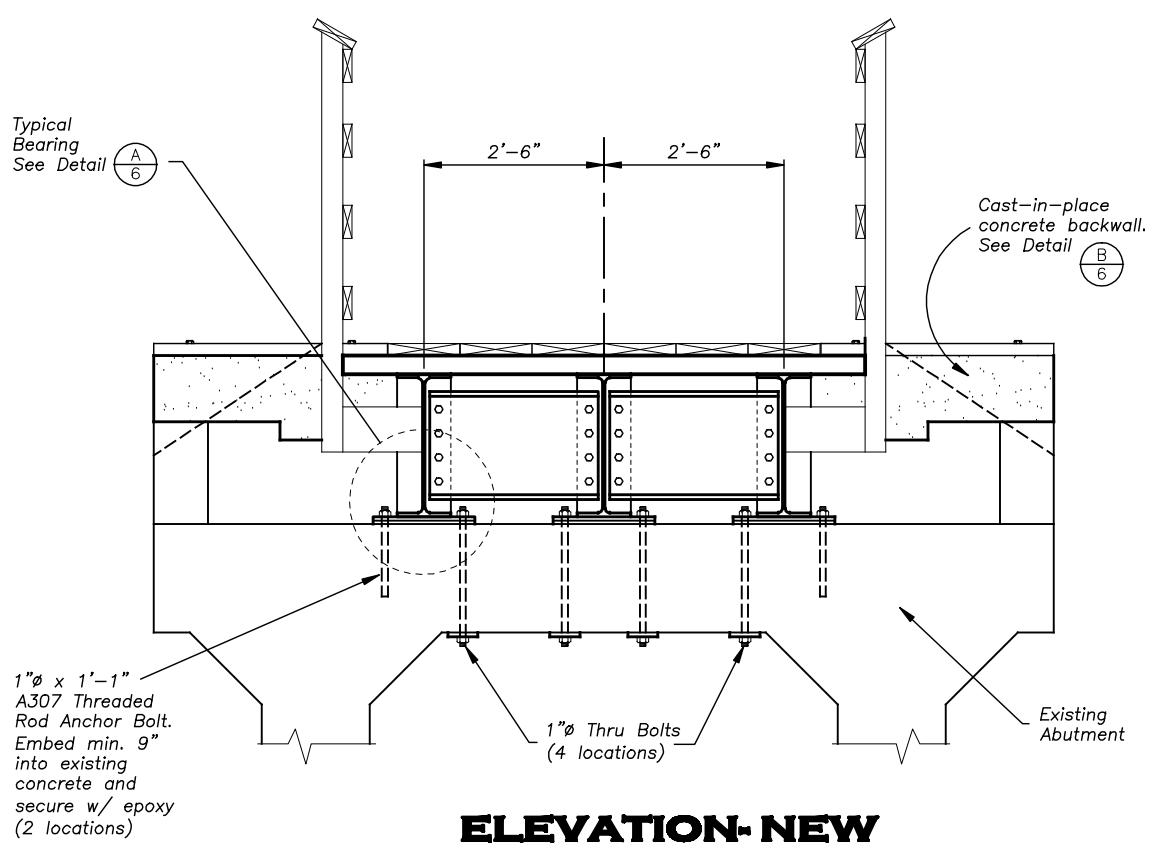

ELEVATION- NEW

Scale: 3/8" = 1'-0"

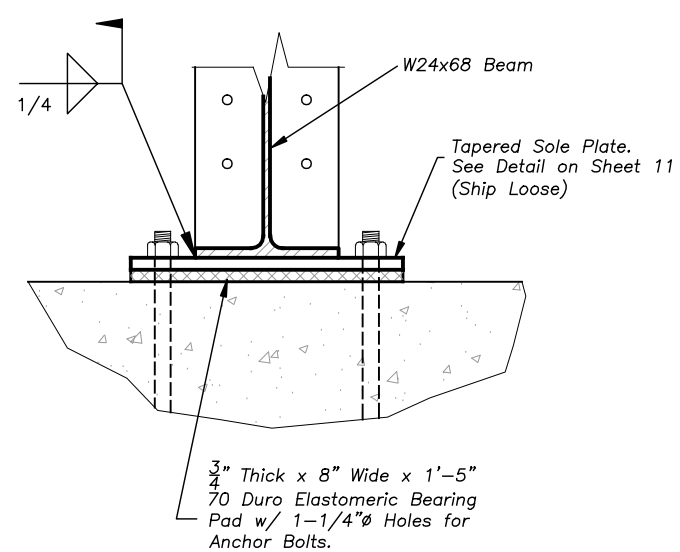

A/6 DETAIL

Not to Scale

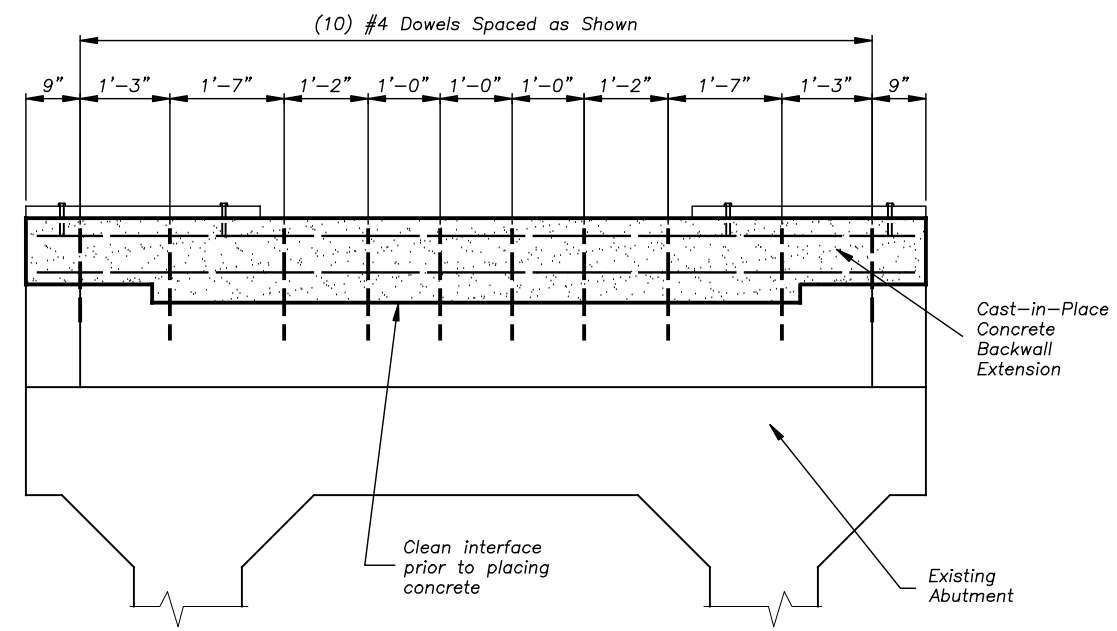

B/6 DETAIL

Scale: 3/8" = 1'-0"

BY	DATE	REVISION DESCRIPTION

DESIGN CT PROJ. NO. 5282
DRAWN CT DATE MAY 07
CHECKED MJ SURVEYED DJ&A

DJ&A, P.C.
CONSULTING ENGINEERS & LAND SURVEYORS

USFS - CLEARWATER N.F.
COLT CREEK CABIN TRAIL
BRIDGE REPLACEMENT

ABUTMENT NO. 1 DETAILS

SHEET 6 OF 14