NPS NO.	REG	STATE	PROJECT	SHEET NO.
412 / 41,911	NCR	MD	PRA-CHOH 102 (1)	A1

U.S. DEPARTMENT OF TRANSPORTATION
FEDERAL HIGHWAY ADMINISTRATION

Project PRA-CHOH 102 (1)

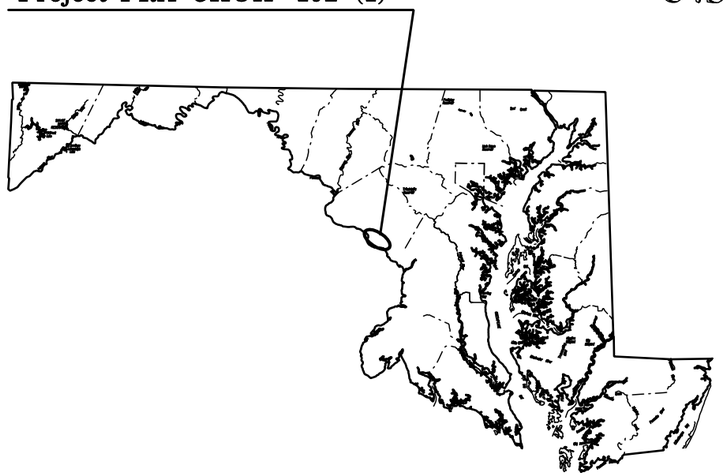

KEY MAP OF MARYLAND

PLANS FOR PROPOSED

PROJECT PRA-CHOH 102 (1)
CHESAPEAKE AND OHIO CANAL NATIONAL HISTORICAL PARK

MONTGOMERY COUNTY
MARYLAND
LENGTH - 1.69 MILES

INDEX TO SHEETS

SHEET NO	DESCRIPTION
A1	Title Sheet
B1	Location Plan
C1	Conventional Symbols and Abbreviations
D1 to D3	Typical Section Sheets
E1	Tabulation of Quantities
F1	Mileage Tabulation
G1 to G12	Schedules and Summaries
H1	Sheet Layout and Survey Information Sheet
I1 to I6	Geometric Layout
J1 to J3	Part Grading Plans
K1 to K6	Roadway Plans
L1 to L5	Roadway Profiles
M1 to M8	Erosion Control Narrative, Plans and Details
N1 to N7	Traffic Control/Phasing Plans
O1 to O6	Signing & Pavement Marking Plans
P1 to P5	Utility Plans
R1	Drainage Profiles
S1 to S34	EFLHD Standard Details and Standard Drawings (including Special Details)
T1 to T60	Cross Sections-Entrance Road
U1 to U4	Cross Sections-Access Road

IMPROVEMENT: PAVEMENT REHABILTATION AND WIDENING GREAT FALLS ENTRANCE ROAD, PAVEMENT REHABILITATION AND RECONSTRUCTION OF PARKING AREAS, DRAINAGE WORK, UNDERGROUND RELOCATION OF ELECTRIC AND TELEPHONE OVERHEAD UTILITIES, AND MISCELLANEOUS WORK.

BRIDGE: N/A

ROAD: GREAT FALLS ENTRANCE ROAD (RT 102)

	WIDTH	TYPE
ROADBED:	26'	SUPERPAVE ASPHALT CONCRETE PAVEMENT

DESIGN DESIGNATION

ADT(2006) =155
V =25/15 MPH
C/A (NONE)

SPECIFICATIONS:

"STANDARD SPECIFICATIONS FOR CONSTRUCTION OF ROADS AND BRIDGES ON FEDERAL HIGHWAY PROJECTS" FP-03 US CUSTOMARY UNITS

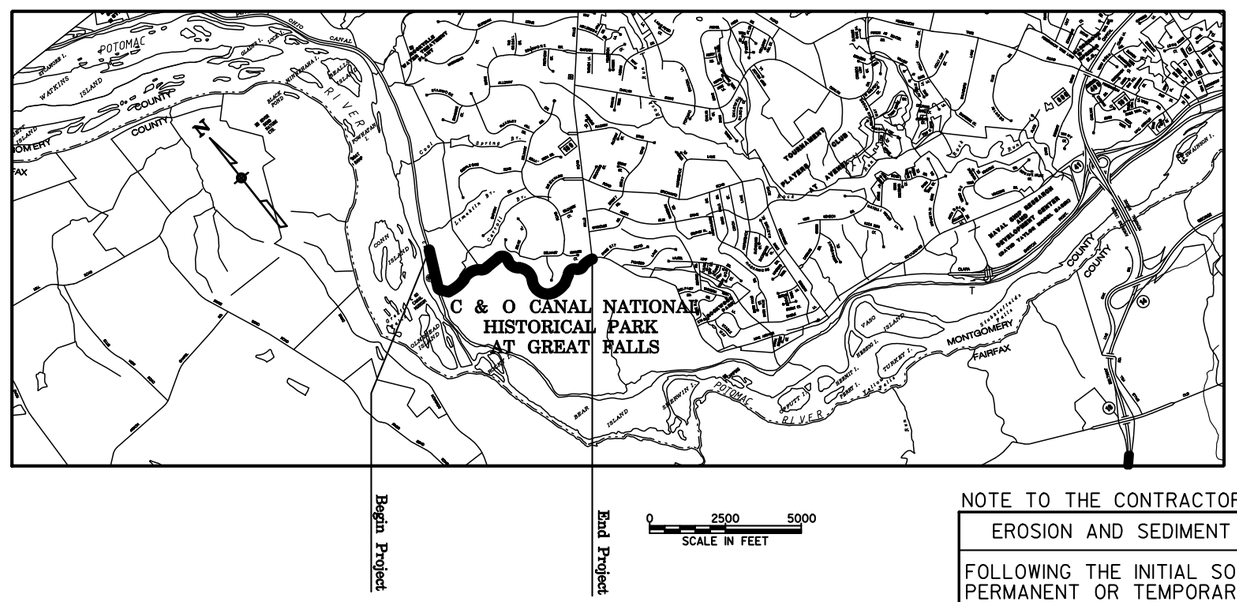

PLANS PREPARED FOR

U.S. DEPARTMENT OF TRANSPORTATION
FEDERAL HIGHWAY ADMINISTRATION
EASTERN FEDERAL LANDS HIGHWAY DIVISION
21400 RIDGETOP CIRCLE
STERLING, VIRGINIA 21066-6511
1-800-892-8776

PLANS PREPARED BY

PREPARED BY URS Group HUNT VALLEY, MARYLAND

NOTE TO THE CONTRACTOR:

EROSION AND SEDIMENT CONTROL WILL BE STRICTLY ENFORCED

FOLLOWING THE INITIAL SOIL DISTURBANCE OR REDISTURBANCE, PERMANENT OR TEMPORARY STABILIZATION SHALL BE COMPLETED WITHIN SEVEN (7) CALENDAR DAYS AS TO THE SURFACE OF ALL PERIMETER CONTROLS, DIKES, SWALES, DITCHES, PERIMETER SLOPES, AND ALL SLOPES GREATER THAN 3 HORIZONTAL TO 1 VERTICAL (3:1); AND FOURTEEN (14) DAYS AS TO ALL OTHER DISTURBED OR GRADED AREAS ON THE PROJECT SITE.

JUNE, 2008

NPS PACKAGE NO. CHOH 042973

NPS NO.	REG	STATE	PROJECT	SHEET NO.
412 41,911	NCR	MD	PRA-CHOH 102 (1)	B1

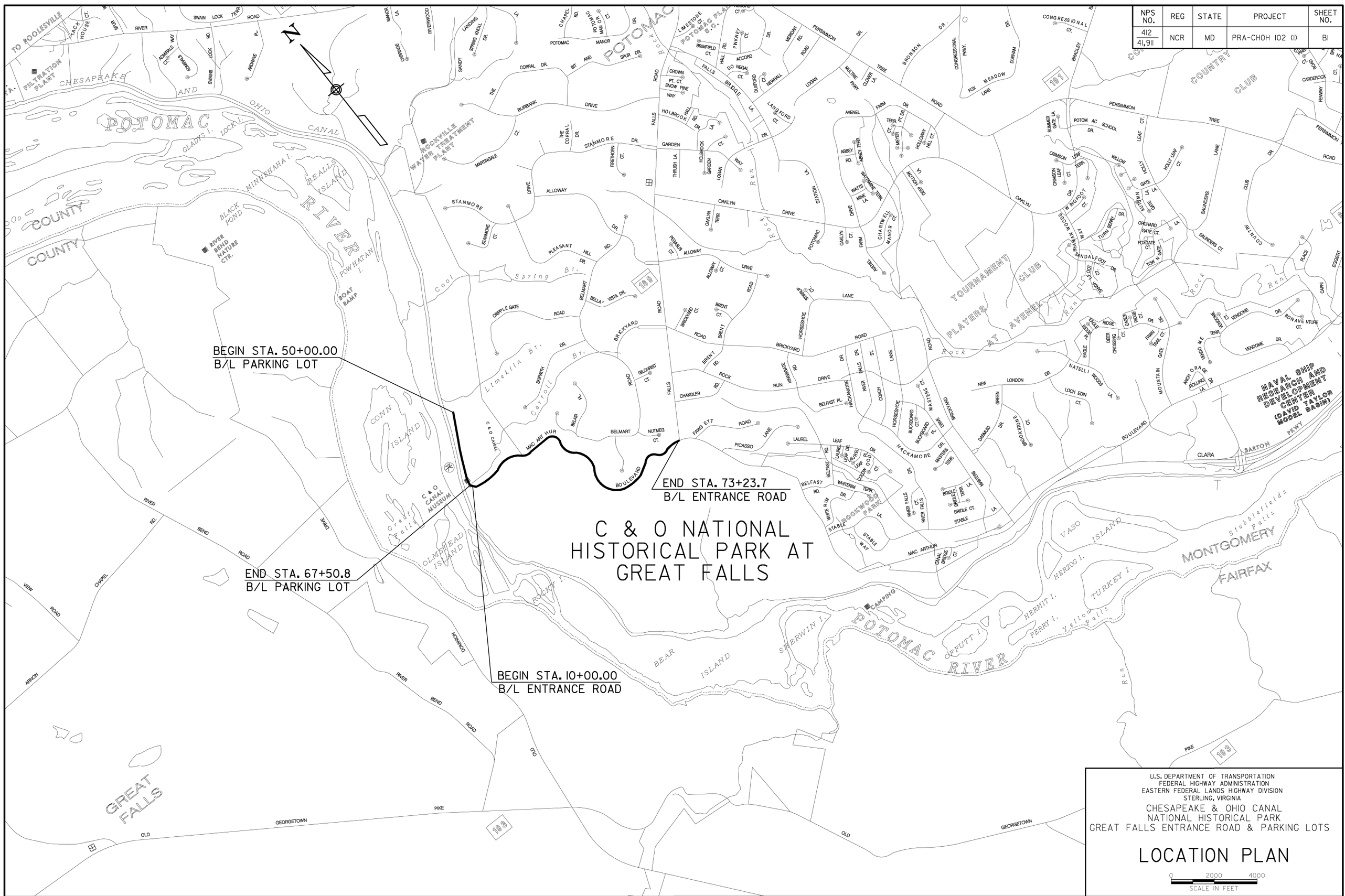

U.S. DEPARTMENT OF TRANSPORTATION
FEDERAL HIGHWAY ADMINISTRATION
EASTERN FEDERAL LANDS HIGHWAY DIVISION
STERLING, VIRGINIA

CHESAPEAKE & OHIO CANAL
NATIONAL HISTORICAL PARK
GREAT FALLS ENTRANCE ROAD & PARKING LOTS

LOCATION PLAN

0 2000 4000
SCALE IN FEET

NPS NO.	REG	STATE	PROJECT	SHEET NO.
412 / 41,911	NCR	MD	PRA-CHOH 102 (1)	C1

SYMBOLS

	EXISTING	PROPOSED
POLE	P	
POWER POLE with UTILITY LINE	E	E
TELEPHONE POLE with UTILITY LINE	T	T
JOINT USE POLE with UTILITY LINES	E&T	E&T
TELEPHONE BOX	TB	No Symbol
SUPPORT POLE with ANCHOR		
UNDERGROUND UTILITIES G = gas; E = electric; O = oil; S = sanitary sewer; T = telephone; W = water	W	W
PEPCO MANHOLE		P
VERIZON MANHOLE		V
SINGLE TREE		
TREE REMOVAL		
TREELINE		
TREE WELL		
CULVERT with END SECTION		
SPECIAL DITCH (flows to right)		
SILT FENCE	No Symbol	SF SF
DITCH CHECK (flows to right)	No Symbol	
COORDINATE GRID TICK		No Symbol
SPOT ELEVATION	x99.9	No Symbol
BORING LOCATION		
SIGNS		
PORTABLE	No Symbol	
POST MOUNTED (SINGLE/DOUBLE)		
FENCE	X X X	xx xx
EXISTING GATE / PROPOSED GATE		
CONSTRUCTION LIMITS		
TOP OF CUT		
TOE OF FILL		
TRANSITION		
NUMBER OF PARKING STALLS		25
FILTER BAG		FB
RIPRAP INFLOW PROTECTION		RRP

	EXISTING	PROPOSED
RIGHT-OF-WAY LINE		R/W
FOREST BOUNDARY		
COUNTY LINE		
WALL		
GUARDWALL		
RETAINING WALL (CUT)		
RETAINING WALL (FILL)		
GUARDRAIL OR GUIDERAIL		
BIKE OR FOOT TRAIL		
TRAFFIC FLOW ARROW		
MARSH AREA		
EDGE OF RIVER OR STREAM		
DIVERSION FENCE		DF
SILT FENCE		SF
SUPER SILT FENCE		SSF
LIMIT OF DISTURBANCE		LOD
PAVEMENT REMOVAL LIMITS		
FULL DEPTH PORTLAND CEMENT CONCRETE PAVEMENT		
FULL DEPTH ASPHALT PAVEMENT CONSTRUCTION		
MILL AND OVERLAY SECTION		
SIDEWALK (EXPOSED AGGREGATE CONCRETE)		
SIDEWALK (BROOM FINISH)		
REMOVE		R
REMOVE BY OTHERS		RO
TREE PROTECTION FENCE		TPF
UNDERDRAIN		UD
STABILIZED CONSTRUCTION ENTRANCE		SCE
CURB INLET PROTECTION		CIP
AT GRADE INLET PROTECTION		AGIP
SOIL STABILIZATION MATTING		
DRAINAGE INLET		
RIPRAP CHANNEL		
LEVEL SPREADER		

ABBREVIATIONS

℄	Baseline
BLDG	Building
BW	Backwall
CO	Contracting Officer
℄	Center Line
CMP	Corrugated Metal Pipe
Constr.	Construction
CY	Cubic Yard
DB	Ductbank
DET.	Detail
DIP	Ductile Iron Pipe
DY	Double Yellow
E	Electric
Elev.	Elevation
Ent.	Entrance
ES	End Section
ESAL	Equivalent Single Axle Load
FB	Fiberglass
G	Gas
HACP	Hot Asphalt Concrete Pavement
HW	Headwall
IN	Inlet, inch
LDCF	Low Density Cementitious Fill
LF	Linear Feet
LOD	Limit of Disturbance
LT	Left
max.	Maximum
MH	Manhole
min.	Minimum
NB	Northbound
No.	Number
NPS	National Park Service
N/R	Not Required
O.C.	On Center
OE&T	Overhead Electric and Telephone
PC	Point of Curvature
PCF	Pounds per cubic foot
PEPCO	Potomac Electric Power Company
PI	Point Of Intersection
PCC	Portland Cement Concrete
P.C.C.	Point Of Compound Curve
PCVC	Point Of Compound Vertical Curve
PGE	Profile Grade Elevation
PGL	Profile Grade Line
P/GL	Profile Ground Line
PMH	Pepco Manhole
POC	Point On Curve
POT	Point On Tangent
PRC	Point Of Reverse Curvature
PRVC	Point Of Reverse Vertical Curve
PT	Point Of Tangency, Point
PVC	Point Of Vertical Curvature, Polyvinyl Chloride
R	Radius, Remove
RCP	Reinforced Concrete Pipe
RGS	Rigid Galvanized Steel
RO	Removed by others
RT	Right
S	Sewer
PVT	Point Of Vertical Tangency
PVI	Point Of Vertical Intersection
SF	Silt Fence, Square Feet
SSF	Super Silt Fence
SACP	Superpave Asphalt Concrete Pavement
SB	Southbound
SBT	Steel Backed Timber (Guardrail)
Shld.	Shoulder
SS	Sanitary Sewer
SSD	Stopping Sight Distance
STA.	Station
STD.	Standard
SY	Square Yard
TBM	Temporary Bench Mark
TRAV.	Traverse
TSOS	Temporary Stone Outlet Structure
Typ.	Typical
VC	Vertical Curve
VMH	Verizon Manhole
W	Water, White
WV	Water Valve
WW	Wing Wall
Y	Yellow

U.S. DEPARTMENT OF TRANSPORTATION
FEDERAL HIGHWAY ADMINISTRATION
EASTERN FEDERAL LANDS HIGHWAY DIVISION
STERLING, VIRGINIA

CHESAPEAKE & OHIO CANAL
NATIONAL HISTORICAL PARK
GREAT FALLS ENTRANCE ROAD & PARKING LOTS

CONVENTIONAL SYMBOLS AND ABBREVIATIONS

NPS NO.	REG	STATE	PROJECT	SHEET NO.
412 / 41,911	NCR	MD	PRA-CHOH 102 (1)	D1

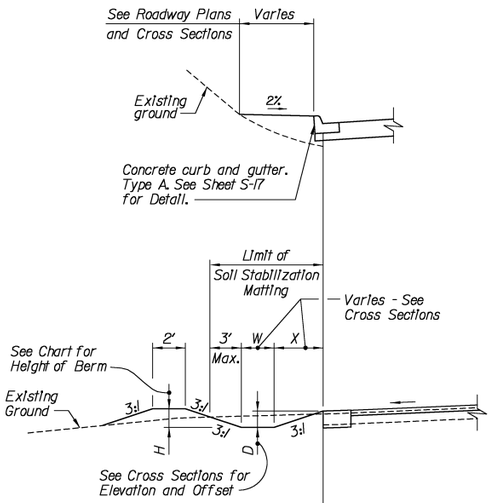

SIDE DITCH (GRASS CHANNEL)

Sta.13+50 to Sta.19+00, Lt.
Sta.35+95 to Sta.40+85, Lt.
Sta.41+80 to Sta.43+60, Lt.
Sta.47+50 to Sta.52+00, Lt.
Sta.55+15 to Sta.59+75, Lt.

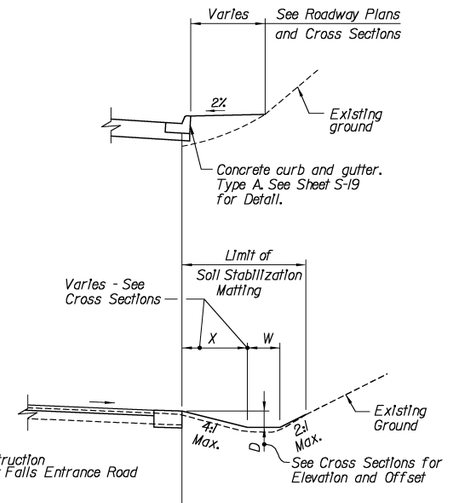

SIDE DITCH (GRASS CHANNEL)

Sta.42+00 to Sta.43+00, Rt.

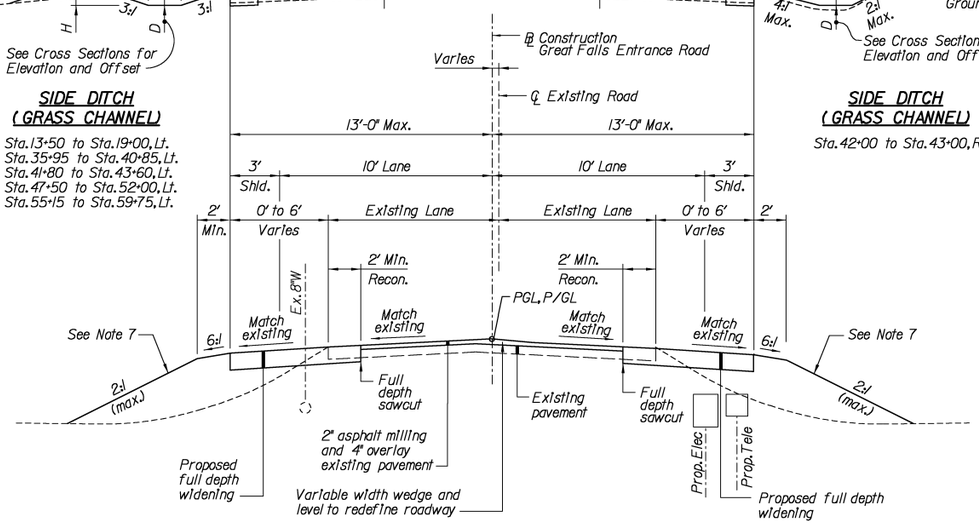

ENTRANCE ROAD TYPICAL SECTION

Sta. 13+00 to 25+70; Sta. 31+95 to 73+23.7

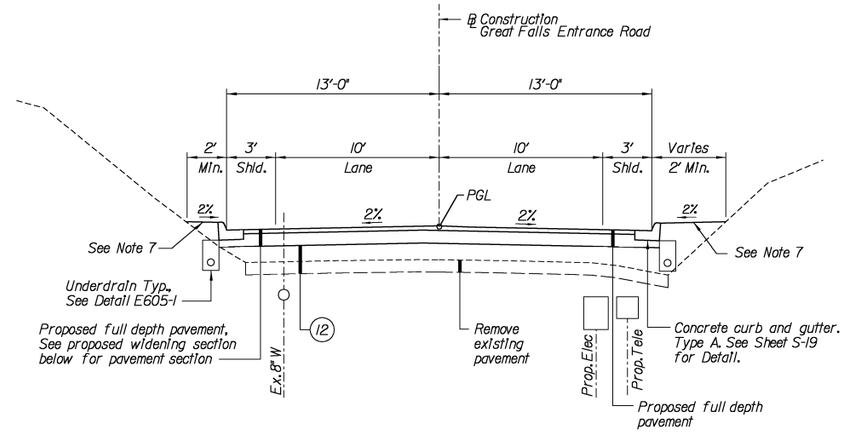

ENTRANCE ROAD TYPICAL SECTION

Sta. 25+70 to 31+95

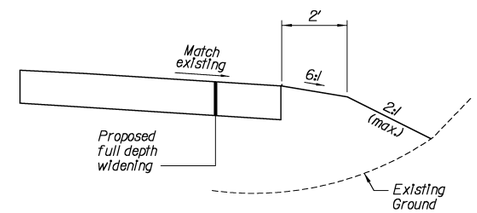

DITCH DETAIL

Sta. 16+00 to 18+30, Rt.
Sta. 44+70 to Sta. 47+50, Rt.

LEGEND

1. Superpave Pavement, 1/2" Nom. Max. Size Aggregate, 4-Inch Depth (Overlay, 2-2" Lifts, Type II Pavement Smoothness)
2. Top Of Existing Asphalt Pavement
2A. Asphalt Tack Coat
3. Finished Pavement Elevation (after 2" of milling)
4. Superpave Pavement, 1/2" Nom. Max. Size Aggregate, 2-Inch Depth (Type II Pavement Smoothness)
5. Superpave Pavement, 3/4" Nom. Max. Size Aggregate, 3 1/2-Inch Depth
6. Aggregate Base Grading C; 8-Inch Depth
7. Paving Geotextile, (Type II-A Non-woven)
8. Curb and Gutter
9. Limit Of Subgrade
10. Earthwork Geotextile, Type II-A
11. Full Depth Sawcut
12. Aggregate Base, Grading C
13. Asphalt Pavement Milling, 2-Inch Depth

GRASS CHANNEL DESIGN DATA

No.	STATION From	STATION To	Bottom Width	Maximum Side Slope	Channel Slope	Channel Depth	Channel Length	Berm Height **
1	13+50	14+75	3	3:1 Max	2.70%	1.25' Min	125	1.50'
1	14+75	19+00	2	3:1 Max	2.70%	0.50' Min	425	1.00'
2	35+95	40+85	2	3:1 Max	2.21%	0.50' Min	525	0.75'
3	41+80	43+60	3	3:1 Max	3.45%	0.25' Min	225	0.50'
4	42+00	43+00	2	4:1 / 2:1	3.30%	0.60' Min	100	N/R
5	55+15	59+75	2	3:1 Max	3.20%	0.40' Min	475	0.75'

* 4:1 and 2:1 max side slopes on fore and back slopes, respectively
** Only where shown on cross sections

Notes:

1. For limits of curb and gutter, see Roadway Plans.
2. For limits of proposed mill and overlay and full depth pavement, see Roadway Plans.
3. As required, contractor to remove two (2) feet of existing roadway width and construct new full depth pavement. This is in addition to any widening required.
4. Cut and fill slopes will transition as shown on Detail E204-1.
5. Slope of proposed gutter pan along the Entrance Road shall match the slope of the roadway.
6. See roadway cross sections for the elevations for proposed widening of the Entrance Road.
7. Provide 4 inches topsoil, seed, and mulch on all disturbed areas.
8. As required, contractor will provide superpave pavement, 1/2 inch nominal maximum size aggregate, wedge and leveling course to provide a minimum 2 percent cross slope.
9. All excavation and subexcavation beneath pavement reconstruction areas will be in accordance with Section 204 of FP-03 Specifications. Install stabilization geotextiles according to Section 207 of the FP-03 Specifications.
10. The depth of undercut below plan finish subgrade should be limited to 2 feet. If unsuitable conditions extend deeper than 2 feet, the exposed surface should be stabilized by scarification and recompaction or placement of a layer of woven geotextile over the excavated surface and backfilling with Base (C) Course Aggregate.

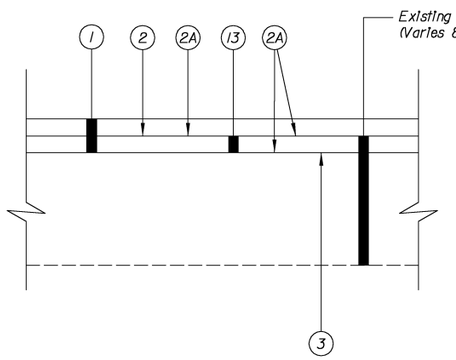

PROPOSED MILL AND OVERLAY DETAIL

Not to Scale

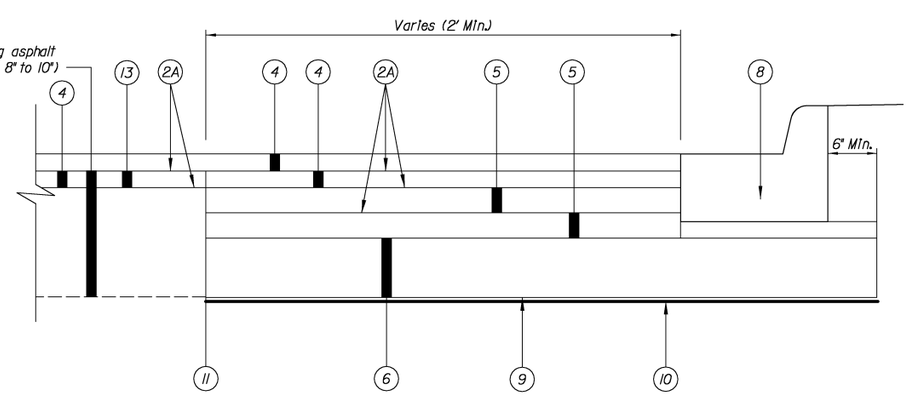

PROPOSED PAVEMENT WIDENING

Not to Scale

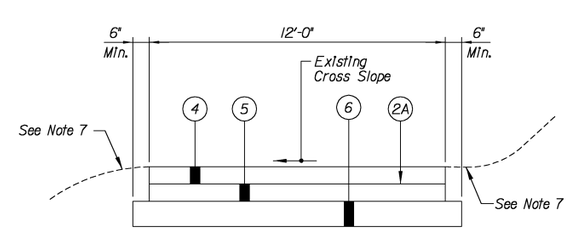

MAINTENANCE BUILDING ACCESS ROAD TYPICAL SECTION

Not to Scale

U.S. DEPARTMENT OF TRANSPORTATION
FEDERAL HIGHWAY ADMINISTRATION
EASTERN FEDERAL LANDS HIGHWAY DIVISION
STERLING, VIRGINIA

CHESAPEAKE & OHIO CANAL
NATIONAL HISTORICAL PARK
GREAT FALLS ENTRANCE ROAD & PARKING LOTS

TYPICAL SECTIONS

0 5 10
SCALE IN FEET

SHEET 1 OF 3

NPS NO.	REG	STATE	PROJECT	SHEET NO.
412 / 41,911	NCR	MD	PRA-CHOH 102 (1)	D2

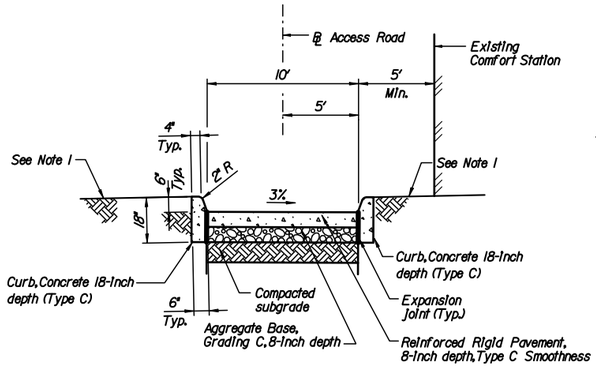

TYPICAL SECTION
ACCESS ROAD

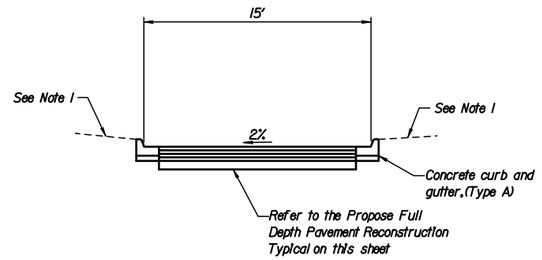

TYPICAL SECTION
BUS PARKING STALL

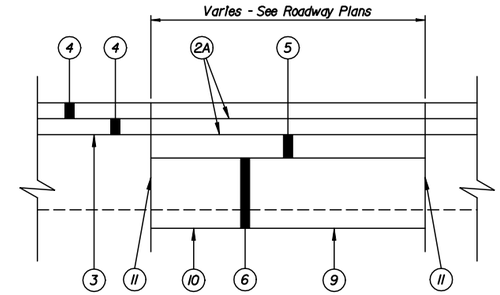

PROPOSED FULL DEPTH PAVEMENT RECONSTRUCTION
Not to Scale

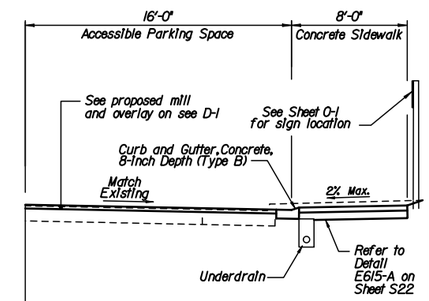

TYPICAL SECTION
ACCESSIBLE PARKING AREA
Sta. 63+40.2 to 64+86.85

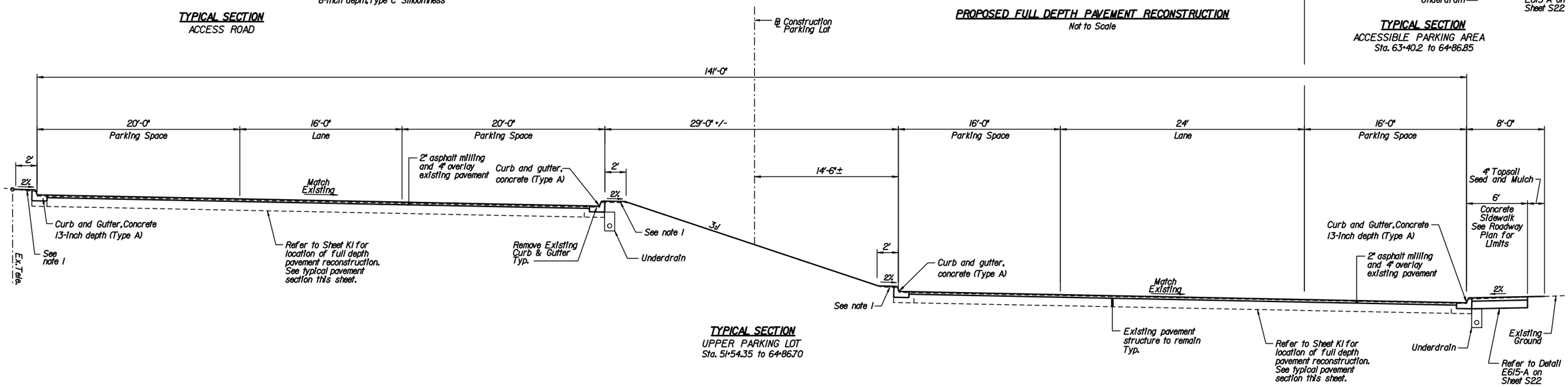

TYPICAL SECTION
UPPER PARKING LOT
Sta. 51+54.35 to 64+86.70

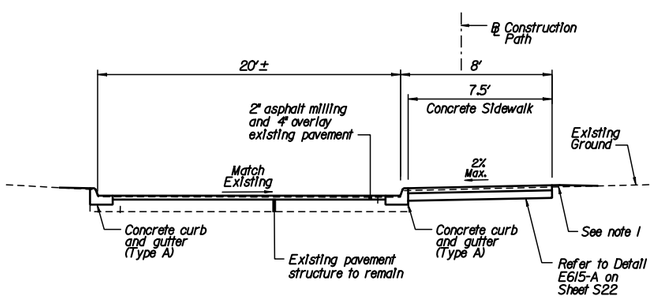

TYPICAL SECTION
PARKING LOT
Sta. 300+88.1 to 303+20.6

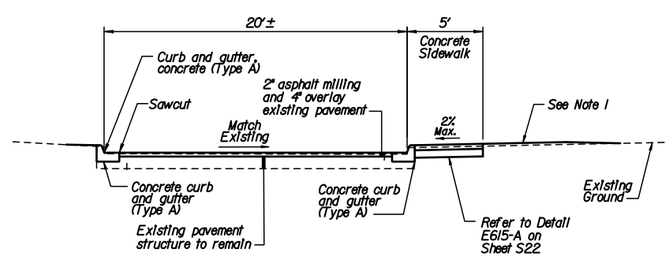

TYPICAL SECTION
ROTARY

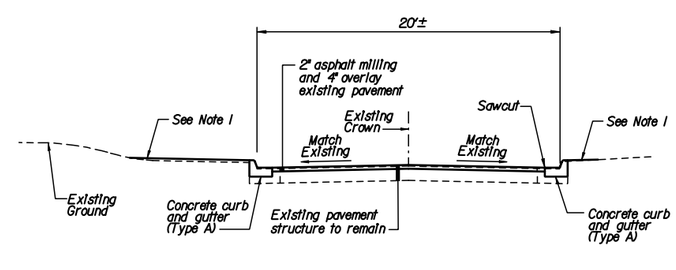

TYPICAL SECTION
ROTARY

NOTES:

1. Provide 4 inches of topsoil, seed and mulch on all disturbed areas.
2. Cut and fill slopes shall transition as shown on Detail E204-1
3. New curb and gutter shall be set 2" above existing pavement edge.
4. Refer to Sheet S19 for curb details.
5. Refer to Sheet K2 for location of full depth pavement reconstruction.
6. The design mix for the Access Road PCC pavement shall be 3500 psi.
7. See Sheet D1 for paving legend.

U.S. DEPARTMENT OF TRANSPORTATION
FEDERAL HIGHWAY ADMINISTRATION
EASTERN FEDERAL LANDS HIGHWAY DIVISION
STERLING, VIRGINIA

CHESAPEAKE & OHIO CANAL
NATIONAL HISTORICAL PARK
GREAT FALLS ENTRANCE ROAD & PARKING LOTS

TYPICAL SECTIONS

0 5 10
SCALE IN FEET

SHEET 2 OF 3

NPS NO.	REG	STATE	PROJECT	SHEET NO.
412 / 41,911	NCR	MD	PRA-CHOH 102 (1)	D3

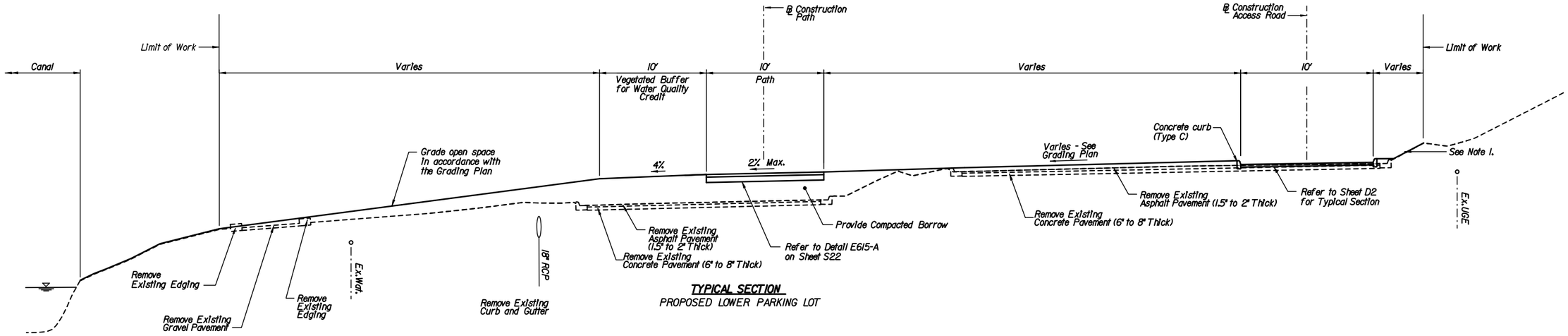

TYPICAL SECTION
PROPOSED LOWER PARKING LOT

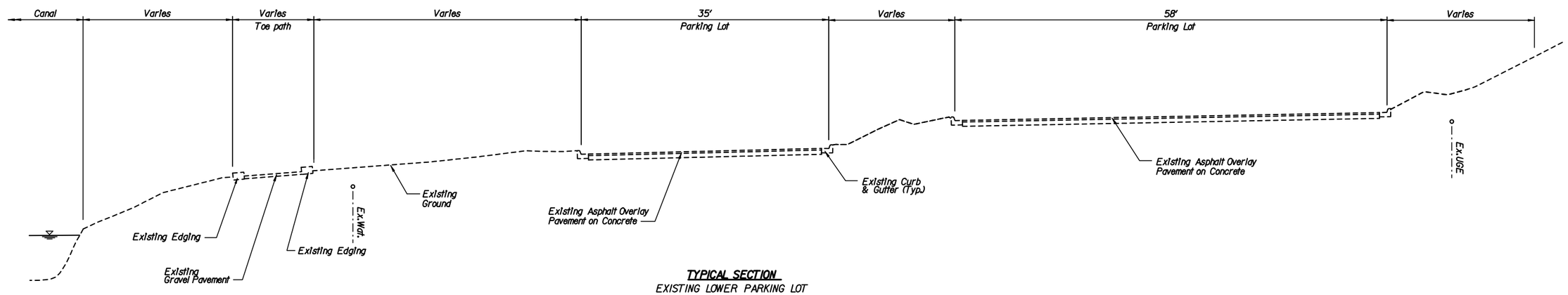

TYPICAL SECTION
EXISTING LOWER PARKING LOT

NOTES:

1. Provide 4 inches of topsoil, seed and mulch on all disturbed areas.
2. Cut and fill slopes shall transition as shown on Detail E204-1.

U.S. DEPARTMENT OF TRANSPORTATION
FEDERAL HIGHWAY ADMINISTRATION
EASTERN FEDERAL LANDS HIGHWAY DIVISION
STERLING, VIRGINIA

CHESAPEAKE & OHIO CANAL
NATIONAL HISTORICAL PARK
GREAT FALLS ENTRANCE ROAD & PARKING LOTS

TYPICAL SECTIONS

0 5 10
SCALE IN FEET

SHEET 3 OF 3

$USER$ $DATE$ 8:31:46 AM $FILE$

NPS NO.	REG	STATE	PROJECT	SHEET NO.
412 / 41,911	NCR	MD	PRA-CHOH 102 (1)	E1

ITEM	DESCRIPTION	UNIT	ESTIMATED QUANTITIES PLAN	ESTIMATED QUANTITIES BID SCHEDULE
	PLAN SHEET SECTION -------->>			
15101-0000	MOBILIZATION	LPSM	ALL	ALL
15214-0000	SURVEY AND STAKING, MISCELLANEOUS	LPSM	ALL	ALL
15301-0010	CONTRACTOR QUALITY CONTROL AND ASSURANCE	LPSM	ALL	ALL
15703-2000	SOIL EROSION CONTROL, TEMPORARY TURF ESTABLISHMENT	ACRE	6.0	6.0
15705-0100	SOIL EROSION CONTROL, SILT FENCE	LNFT	10500	10,500
15705-0100	SOIL EROSION CONTROL, SILT FENCE (SUPER SILT FENCE)	LNFT	1500	1,500
15705-0100	SOIL EROSION CONTROL, SILT FENCE (DIVERSION FENCE)	LNFT	1800	1,800
15705-0500	SOIL EROSION CONTROL, TEMPORARY CULVERT PIPE	LNFT	210	210
15705-1700	SOIL EROSION CONTROL, FILTER BERM (LEVEL SPREADER)	LNFT	20	20
15706-0300	SOIL EROSION CONTROL, SANDBAG	EACH	2400	2,400
15706-1000	SOIL EROSION CONTROL, INLET PROTECTION	EACH	8	8
15706-1600	SOIL EROSION CONTROL, STABILIZED CONSTRUCTION ENTRANCE	EACH	2	2
15706-1800	SOIL EROSION CONTROL, TEMPORARY STONE OUTLET STRUCTURE	EACH	7	7
15706-2200	SOIL EROSION CONTROL, FILTER BAG	EACH	6	6
20102-0000	CLEARING AND GRUBBING	LPSM	ALL	ALL
20220-1000	REMOVAL, INDIVIDUAL TREE	EACH	8	8
20301-0080	REMOVAL OF BENCH	EACH	4	4
20301-0100	REMOVAL OF BOLLARD	EACH	12	12
20301-0800	REMOVAL OF DRINKING FOUNTAIN	EACH	1	1
20301-0900	REMOVAL OF FIRE HYDRANT	EACH	1	1
20301-1300	REMOVAL OF INLET GRATE	EACH	13	13
20301-1400	REMOVAL OF INLET	EACH	1	1
20301-1500	REMOVAL OF LIGHT POLE	EACH	1	1
20301-2000	REMOVAL OF PIPE END SECTION	EACH	2	2
20301-2400	REMOVAL OF SIGN	EACH	32	32
20301-2700	REMOVAL OF STRUCTURE (STAIRS)	EACH	1	1
20302-0300	REMOVAL OF CURB AND GUTTER, CONCRETE	LNFT	9730	9,730
20302-2100	REMOVAL OF PIPE CULVERT	LNFT	125	125
20303-0300	REMOVAL OF CONCRETE (STAIRS)	SQYD	30	30
20303-1200	REMOVAL OF PAVED WATERWAY, ASPHALT	SQYD	125	125
20303-1600	REMOVAL OF PAVEMENT, ASPHALT	SQYD	8000	8,000
20303-2300	REMOVAL OF PAVEMENT, CONCRETE	SQYD	2500	2,500
20303-3100	REMOVAL OF SIDEWALK, BRICK	SQYD	75	75
20303-3200	REMOVAL OF SIDEWALK, CONCRETE	SQYD	60	60
20303-3300	REMOVAL OF SIDEWALK, STONE	SQYD	950	950
20305-2000	REMOVAL OF STONE MASONRY	CUYD	18	18
20401-0000	ROADWAY EXCAVATION	CUYD	5000	5,000
20410-0000	SELECT BORROW	CUYD	1500	1,500
20701-0700	EARTHWORK GEOTEXTILE, TYPE II-A	SQYD	8500	8,500
25101-3000	PLACED RIPRAP, CLASS 3	CUYD	100	100
25302-1000	GABIONS, GALVANIZED OR ALUMINIZED COATED	CUYD	110	110
30101-1000	AGGREGATE BASE GRADING C	TON	6600	6,600
40101-0500	SUPERPAVE PAVEMENT, 1/2-INCH NOMINAL MAXIMUM SIZE AGGREGATE, *0.3 MILLION ESAL	TON	8500	8,500
40101-0900	SUPERPAVE PAVEMENT, 3/4-INCH NOMINAL MAXIMUM SIZE AGGREGATE, *0.3 MILLION ESAL	TON	4000	4,000
40102-0500	SUPERPAVE PAVEMENT, 1/2-INCH NOMINAL MAXIMUM SIZE AGGREGATE, *0.3 MILLION ESAL, WEDGE AND LEVELING COURSE	TON	1000	1,000
41301-0600	ASPHALT PAVEMENT MILLING, 2-INCH DEPTH	SQYD	30000	30,000
41410-1000	CRACK, CLEANING AND SEALING	LNFT	1500	1,500
41501-0000	PAVING GEOTEXTILE	SQYD	8000	8,000
50101-0900	REINFORCED RIGID PAVEMENT, 8-INCH DEPTH, TYPE C SMOOTHNESS	SQYD	425	425
55506-0000	MISCELLANEOUS STEEL (EXTERIOR STAIRS NEAR RNAGER STATION)	EACH	1	1
60101-0000	CONCRETE (DUCTBANK)	CUYD	850	850
60103-0140	CONCRETE, HEADWALL FOR 24-INCH PIPE CULVERT	EACH	2	2

ITEM	DESCRIPTION	UNIT	ESTIMATED QUANTITIES PLAN	ESTIMATED QUANTITIES BID SCHEDULE
	PLAN SHEET SECTION -------->>			
60103-2540	CONCRETE, HEADWALL FOR 6-INCH UNDERDRAIN	EACH	4	4
60201-0500	15-INCH PIPE CULVERT	LNFT	112	112
60201-0600	18-INCH PIPE CULVERT	LNFT	316	316
60201-0800	24-INCH PIPE CULVERT	LNFT	60	60
60210-0600	END SECTION FOR 18-INCH PIPE CULVERT	EACH	1	1
60210-0800	END SECTION FOR 24-INCH PIPE CULVERT	EACH	1	1
60401-0000	MANHOLE	EACH	1	1
60403-0100	INLET, TYPE 1	EACH	3	3
60403-1700	INLET, TYPE 6A	EACH	3	3
60405-0000	MANHOLE ADJUSTMENT	EACH	2	2
60409-0700	INLET TOP, METAL FRAME AND GRATE TYPE 6A	EACH	13	13
60501-0000	STANDARD UNDERDRAIN SYSTEM , 6 INCH	LNFT	4200	4,200
60510-0800	6-INCH OUTLET PIPE	LNFT	110	110
60515-0400	UNDERDRAIN CLEANOUT, 6-INCH	EACH	2	2
60703-0000	CLEANING CULVERTS IN PLACE	LNFT	1200	1,200
60901-1700	CURB, CONCRETE, 18-INCH DEPTH (TYPE C)	LNFT	700	700
60902-0600	CURB AND GUTTER, CONCRETE, 8-INCH DEPTH (TYPE B)	LNFT	600	600
60902-1100	CURB AND GUTTER, CONCRETE, 13-INCH DEPTH (TYPE A)	LNFT	10200	10,200
60915-1000	WHEELSTOP, CONCRETE	EACH	11	11
61106-0000	FIRE HYDRANT	EACH	1	1
61501-0100	SIDEWALK, CONCRETE	SQYD	2000	2,000
61501-0500	SIDEWALK, EXPOSED AGGREGATE CONCRETE	SQYD	550	550
61504-1000	ACCESSIBILITY RAMP, CONCRETE	SQYD	30	30
61505-1000	ACCESSIBILITY RAMP, CONCRETE (CONCRETE STAIRS AND RAILING)	EACH	2	2
61901-0000	FENCE (TREE PROTECTION)	LNFT	900	900
62401-0300	FURNISHING AND PLACING TOPSOIL, 4-INCH DEPTH	SQYD	30000	30,000
62502-0000	TURF ESTABLISHMENT	SQYD	30000	30,000
62901-1200	ROLLED EROSION CONTROL PRODUCT, TYPE 5.A	SQYD	1900	1,900
63304-0900	SIGNS, ALUMINUM PANELS, TYPE 3 SHEETING	SQFT	130	130
63401-1500	PAVEMENT MARKINGS, TYPE H, SOLID	LNFT	22500	22,500
63403-0800	PAVEMENT MARKINGS, TYPE H (STRAIGHT ARROW)	SQFT	80	80
63403-0800	PAVEMENT MARKINGS, TYPE H (ACCESSIBILITY SYMBOL)	SQFT	162	162
63501-0000	TEMPORARY TRAFFIC CONTROL (FLAGGER)	LPSM	ALL	ALL
63502-0700	TEMPORARY TRAFFIC CONTROL, CONE (TYPE 28-INCH)	EACH	30	30
63502-1300	TEMPORARY TRAFFIC CONTROL, DRUM	EACH	50	50
63502-2000	TEMPORARY TRAFFIC CONTROL, PORTABLE CHANGEABLE MESSAGE SIGN	EACH	1	1
63503-1000	TEMPORARY TRAFFIC CONTROL, PLASTIC FENCE	LNFT	760	760
63504-1000	TEMPORARY TRAFFIC CONTROL, CONSTRUCTION SIGN	SQFT	150	150
63601-3000	SYSTEM INSTALLATION, ELECTRICAL (GENERATOR, 3-PHASE, 50 KW, 120/208 VOLT)	LPSM	ALL	ALL
63610-0000	CONDUIT , 5 - INCH FIBERGLASS	LNFT	37000	37,000
63610-1600	CONDUIT, 2-INCH, PVC	LNFT	550	550
63610-2800	CONDUIT, 4-INCH, PVC	LNFT	38000	38,000
63623-1000	MANHOLE, ELECTRICAL	EACH	12	12
63623-2000	MANHOLE, TELEPHONE	EACH	12	12
63701-0000	FIELD OFFICE	EACH	1	1
64502-0000	LOCATE UTILITIES	EACH	6	6

U.S. DEPARTMENT OF TRANSPORTATION
FEDERAL HIGHWAY ADMINISTRATION
EASTERN FEDERAL LANDS HIGHWAY DIVISION
STERLING, VIRGINIA

CHESAPEAKE & OHIO CANAL
NATIONAL HISTORICAL PARK
GREAT FALLS ENTRANCE ROAD & PARKING LOTS

TABULATION OF QUANTITIES

NPS NO.	REG	STATE	PROJECT	SHEET NO.
412 / 41,911	NCR	MD	PRA-CHOH 102 (1)	F1

ROADWAY	STATION TO STATION	LENGTH	
		FEET	MILES
PRIMARY ROADWAY			
Great Falls Entrance Road	10+00.00 - 73+06.22	6,306.22	1.19
PARKING LOTS			
Upper Parking Lot	50+00.00 - 67+50.76	1,750.76	0.33
Lower Parking Lot	300+00.00 - 308+91.23	891.23	0.17
	Total	8,948.21	1.69

U.S. DEPARTMENT OF TRANSPORTATION
FEDERAL HIGHWAY ADMINISTRATION
EASTERN FEDERAL LANDS HIGHWAY DIVISION
STERLING, VIRGINIA

CHESAPEAKE & OHIO CANAL
NATIONAL HISTORICAL PARK
GREAT FALLS ENTRANCE ROAD & PARKING LOTS

MILEAGE TABULATION

NPS NO.	REG	STATE	PROJECT	SHEET NO.
412 / 41,911	NCR	MD	PRA-CHOH 102 (1)	G1

ITEM 15705-0100 – SOIL EROSION CONTROL SILT FENCE (FEET)

STATION From	To	Length	Offset	STATION From	To	Length	Offset
B/L Entrance Road				B/L Parking Lot			
11+25	15+89	500	LT	50+35	51+52	141	LT & RT
12+85	24+26	1126	RT	51+40	64+97	1400	RT
15+87	15+99	18	LT				
15+96	19+28	356	LT		Subtotal	1,541	Feet
19+69	23+93	447	LT				
25+05	25+94	104	RT	B/L Path			
30+64	31+47	86	RT	302+12	302+90	87	RT
35+66	35+93	57	LT	304+00	306+00	202	RT
35+75	38+59	293	RT	305+30	305+98	93	LT
36+76	44+39	782	LT		Subtotal	382	Feet
41+04	44+51	336	RT				
44+41	44+54	18	LT				
44+65	55+25	1090	RT				
44+78	52+05	712	LT				
55+05	71+00	1600	LT				
60+03	64+72	462	RT				
65+03	67+56	269	RT				
	Subtotal	8256	Feet				
					TOTAL	10,179	Feet

ITEM 15706-1000 SOIL EROSION CONTROL INLET PROTECTION (EACH)

STATION	Offset	Ea
B/L Entrance Road		
10+10	2.47' RT	1
15+93	18.59' LT	1
44+70	16.74' RT	1
	SUBTOTAL	3
B/L Path		
303+72	37.80' LT	1
304+89	52.48' RT	1
	SUBTOTAL	2
B/L Access Road		
200+36	36.27' LT	1
200+67	17.43' RT	1
203+38	7.07' RT	1
	SUBTOTAL	3
	TOTAL	8 Ea

ITEM 62901-1200 – SOIL EROSION CONTROL SOIL STABILIZATION (SQ YARD)

STATION From	To	Length	Offset	Area (sq yd)
B/L Entrance Road				
13+25	18+90	585	LT	390
15+95	18+35	240	RT	160
23+85	23+96	5	LT	3.3
34+25	40+85	660	LT	452.8
41+67	43+60	195	LT	133.3
42+00	43+00	100	RT	66.7
44+70	47+45	275	RT	144.4
47+50	52+00	450	LT	291.7
55+15	59+70	455	LT	202.2
			TOTAL	1844.4 sq yd

ITEM 15705-0100 SOIL EROSION CONTROL DIVERSION FENCE (FEET)

STATION From	To	Length	Offset
B/L Entrance Road			
15+65	18+35	270	RT
24+03	30+78	665	LT
38+90	41+04	215	RT
44+51	47+48	300	RT
58+03	60+01	191	RT
	Subtotal	1641	Feet
B/L Parking Lot			
50+22	51+32	150	LT
	Subtotal	150	Feet
	TOTAL	1791	Feet

ITEM 15705-0500 SOIL EROSION CONTROL TEMPORARY CULVERT PIPE (FEET)

STATION From	To	Length	Offset
B/L Entrance Road			
19+60	20+00	50	RT
34+33	35+66	160	LT
	TOTAL	210	Feet

ITEM 15706-1800 SOIL EROSION CONTROL TEMPORARY STONE OUTLET STRUCTURE (EACH)

STATION	Offset	Ea
B/L Entrance Road		
23+94	LT	1
26+35	RT	1
38+60	RT	1
60+16	RT	1
64+72	RT	1
67+55	RT	1
72+81	RT	1
	TOTAL	7 Ea

ITEM 15706-0300 – SOIL EROSION CONTROL SANDBAG (BAGS)

Station	Height	Length	Width	Volume (CF)	# Bags
B/L Entrance Road					
19+60	2	8	2	32	96
20+00	2	8	2	32	96
23+93	2	6	2	24	72
26+35	2	18	2	72	216
34+20	2	16	2	64	192
35+63	2	16	2	64	192
38+60	2	34	2	136	408
38+61	2	32	2	128	384
59+90	2	28	2	112	336
59+95	2	28	2	112	336
				TOTAL	2328 Ea

ITEM 15705-1700 SOIL EROSION CONTROL LEVEL SPREADER (FEET)

STATION	Length	Offset
B/L Entrance Road		
47+45	10	LT
59+83	10	LT
TOTAL	20	Feet

ITEM 15706-2200 SOIL EROSION CONTROL FILTER BAG (EA)

STATION	Quantity	Offset
16+05	1	LT
19+47	1	RT
19+53	1	LT
34+15	1	LT
35+63	1	LT
44+60	1	LT
TOTAL	6	EACH

ITEM 15706-1600 SOIL EROSION CONTROL STABILIZED CONSTRUCTION ENTRANCE (EA)

STATION	Quantity	Offset
B/L Entrance Road		
50+60	1	15' LT
B/L Path		
304+25	1	50' LT
TOTAL	2	EACH

ITEM 15705-0100 – SOIL EROSION CONTROL SUPER SILT FENCE (FEET)

STATION From	To	Length	Offset	STATION From	To	Length	Offset
B/L Entrance Road				B/L Path			
19+21	19+66	54	RT	302+55	308+38	605	RT
24+20	25+35	155	LT				
30+75	36+75	617	LT		Subtotal	605	Feet
44+57	44+96	53	LT				
	Subtotal	826	Feet				
	TOTAL	1431	Feet				

Notes:
1. Install silt fence a minimum of 2 feet from the toe of the fill slope. Install silt fence behind all outlet headwalls and end sections.
2. Install erosion control mat, type 1 or 2 according to Sections 157 and 629, on all disturbed slopes with a slope ratio steeper than 2 horizontal to 1 vertical.
3. Install additional silt fence, temporary inlet protection, and erosion control matting, as directed by the CO.
4. Additional required erosion control items not shown on this sheet include stabilized construction entrance and remove/reset silt fence and supersilt fence. Refer to Erosion Control Plans and Standard Details for more information.

U.S. DEPARTMENT OF TRANSPORTATION
FEDERAL HIGHWAY ADMINISTRATION
EASTERN FEDERAL LANDS HIGHWAY DIVISION
STERLING, VIRGINIA

CHESAPEAKE & OHIO CANAL
NATIONAL HISTORICAL PARK
GREAT FALLS ENTRANCE ROAD & PARKING LOTS

EROSION CONTROL SCHEDULES

SHEET 1 OF 12

NPS NO.	REG	STATE	PROJECT	SHEET NO.
412 / 41,911	NCR	MD	PRA-CHOH 102 (1)	G2

DRAINAGE SCHEDULE

ALIGNMENT	LOCATION	REMOVAL ITEMS				PIPE CULVERT (LINEAR FEET)				INLET (EACH)			HEADWALL (EACH)		END SECTION (EACH)			MANHOLE (EACH)	GABION (CY)	RIPRAP	REMARKS
	STATION, OFFSET	ITEM 20301 -1300 REMOVAL OF FRAME AND GRATE	ITEM 20301 -1400 REMOVAL OF INLETS	ITEM 20301 -2000 REMOVAL OF PIPE END SECTION	ITEM 20302 -2100 REMOVAL OF PIPE CULVERT	ITEM 60201 -0500 15 Inch	ITEM 60201 -0600 18 Inch	ITEM 60201 -0800 24 Inch	ITEM 60703 -0000 CLEANING EXISTING CULVERTS	ITEM 60403 -0100 1	ITEM 60403 -1700 6A	ITEM 60409 -0700 FRAME & GRATE 6A	ITEM 60103 -0140 24 Inch	ITEM 60103 -2540 6 Inch		ITEM 60210 -0600 18 Inch	ITEM 60210 -0800 24 Inch	ITEM 60401 -0000	ITEM 25302-1000 GABIONS, GALVANIZED OR ALUMINUM COATED	ITEM 25101-3000 PLACED RIPRAP CY Class 3	
PARKING LOT	51+56, Lt.	1										1									
	51+56 to 52+04								97												
	52+04 to 52+11, Rt.								79												
	55+16, Lt.	1										1									
	55+17 to 55+17								83												
	55+17, Rt.	1										1									
	55+17 to 55+17, Rt.								57												
	58+51, Lt.	1										1									
	58+95, Lt.	1										1									
	58+94, Rt.	1										1									
	64+85 to 64+85								84												
	64+85 to 64+85, Rt.								80												
	63+38, Rt.						143				1										1-1 to EX 1-1
	64+85, Lt.	1										1									
	64+85, Rt.	1										1									
	66+51, Lt.	1										1									
	66+69' Rt.	1										1									
	66+99, Rt.	1										1									
PATH	302+57 to 303+41, Lt.								262												
	302+58, Lt.		1																		
	302+59, Lt.									1											1-6
	302+62 to 303+48, Lt.								262												
	303+42 to 303+44, Rt.								36												
	303+73, Lt.	1										1									
	304+90 to 305+19, Rt.								51												
	306+57, Lt.						173											1			MH-1 to EX 1-2
ACCESS ROAD	203+38, Rt.					54					1										1-4 to MH-1
ENTRANCE ROAD	10+15, Rt.					58					1										1-2 to EX MH-1
	15+93			1	60			60		1							1			5	1-3 to ES-1
	19+48 to 19+77								53				2							10	EW-1 to EW-2
	23+85, Lt.													1						1	
	27+60, Rt.													1						1	
	34+33 to 35+62																		106		
	44+71			1	65		45			1						1				5	1-5 to ES-2
	49+60, Lt.													1						1	
	60+95, Lt.													1						1	
Total		13	1	2	125	112	316	60	1,144	3	3	13	2	4		1	1	1	106	24	

NOTE:

Locations, existing information, proposed lengths, and sizes are estimated only and should not be ordered until measured to match field conditions and submitted in writing to the CO. Obtain CO approval prior to ordering material.

Replace culverts within existing flowlines, unless otherwise noted or directed by the CO. Extend culverts to keep headwalls outside the design clear zone, as directed by the CO. Adjust inverts to meet field conditions, minimum cover, and typical sections, as directed by the CO.

Regrade all areas (inlet and outlet) to drain. Remarks for "Grade to drain" and "Recondition ditch" indicate existing drainage is poor.

The connection of new pipe to an existing inlet and bricking of the curb opening for EX-12 and EX-13 is considered incidental to the installation of the pipe.

See Underdrain System and Cleaning Culverts in Place Schedules for additional information.

HW = Headwall I= Inlet and type
EW = Endwall ES= End Section
MH = Manhole

RCP = Reinforced Concrete Pipe
CMP = Corrugated Metal Pipe

U.S. DEPARTMENT OF TRANSPORTATION
FEDERAL HIGHWAY ADMINISTRATION
EASTERN FEDERAL LANDS HIGHWAY DIVISION
STERLING, VIRGINIA

CHESAPEAKE & OHIO CANAL
NATIONAL HISTORICAL PARK
GREAT FALLS ENTRANCE ROAD & PARKING LOTS

DRAINAGE SCHEDULE

ferner 9/20/2007 8:55:38 AM o:\dlf000117\01\cad\plans\schedules\sch-drn.dgn

NPS NO.	REG	STATE	PROJECT	SHEET NO.
412 / 41,911	NCR	MD	PRA-CHOH 102 (1)	G3

STANDARD UNDERDRAIN SCHEDULE

ALIGNMENT	STATION LIMITS	ITEM 60103-2540 Concrete, Headwall for 6-Inch Underdrain	ITEM 60501-00000 Standard Underdrain System, 6-inch diameter	ITEM 60510-0800 6-Inch Outlet Pipe	ITEM 60515-0400 Underdrain Cleanout, 6-Inch	REMARKS
		Length (Feet)				
PARKING LOT	51+57 54+90, 15', Lt.		333			Outlet to existing inlet, Sta. 51+55, 15' Lt.
	55+18 56+31, 15', Lt.		113			Outlet to existing inlet, Sta. 51+16, 15' Lt.
	56+31 58+50, 15', Lt.		220			Outlet to existing inlet, Sta. 58+51, 16' Lt.
	58+95 61+07, 15', Lt.		212			Outlet to existing inlet, Sta. 58+95, 17' Lt.
	61+34 64+86, 15', Lt.		352			Outlet to existing inlet, Sta. 64+85, 15' Lt.
	51+55 54+90, 72', Rt.		335			Outlet to existing inlet, Sta. 52+04, 69' Rt.
	55+16 61+08, 72', Rt.		189			Outlet to existing inlet, Sta. 58+94, 68' Rt.
	61+34 64+84, 72', Rt.		350			Outlet to existing inlet, Sta. 64+84, 71' Rt.
ENTRANCE ROAD	24+00 31+00, Lt.		700			
	27+75 35+75, Rt.		800			
	49+75 51+75, Lt.		200			
	59+23 60+95, Lt.		172			
	60+95 61+92, Rt.		97			
	23+85 24+00, 13' Lt.	1		20		
	27+60 49+75, 13' Rt.	1		20		
	49+60 60+95 13' Rt.	1		20		
	60+95	1		50		
	51+75 17' Lt.				1	
	60+95 20' Rt.				1	
	TOTAL	4	4,073	110	2	

Note:

1. Where noted. tie underdrain to culvert inlet and/or outlet by running underdrain along existing culvert grade and outlet underdrain in riprap where possible.
2. Extend geotextile fabric and aggregate 1 foot beyond capped ends and cover with topsoil.
3. The connection of the underdrain to the existing or new inlet will be considered incidental to the underdrain.

U.S. DEPARTMENT OF TRANSPORTATION
FEDERAL HIGHWAY ADMINISTRATION
EASTERN FEDERAL LANDS HIGHWAY DIVISION
STERLING, VIRGINIA

CHESAPEAKE & OHIO CANAL
NATIONAL HISTORICAL PARK
GREAT FALLS ENTRANCE ROAD & PARKING LOTS

UNDERDRAIN SCHEDULE

Terner 9/20/2007 8:55:39 AM o:\dif000117\01\cad\plans\schedules\sch-undrn.dgn

NPS NO.	REG	STATE	PROJECT	SHEET NO.
412 / 41,911	NCR	MD	PRA-CHOH 102 (1)	G4

PAVEMENT SECTION SCHEDULE – FULL DEPTH PATCH SECTIONS

BASELINE	STATION	Length (Feet)	Area (Sq.Ft.)	Proposed Work -- Pavement Section
Parking Lot	50+77 to 51+55, Lt. & Rt.	77	3,256	Full Depth Patch
	51+69, Lt. 53+47, Lt.	176	2,403	Full Depth Patch - Driveway to Maintenance Yard
	52+36, Lt. to 52+81, Lt.	46	2,480	Full Depth Patch
	53+45, Lt. to 53+90, Lt.	45	1,070	Full Depth Patch
	54+64, Lt. to 55+16, Lt.	53	1,250	Full Depth Patch
	56+79, Lt. to 58+36 Lt.	167	1,924	Full Depth Patch - Driveway to Maintenance Yard
	58+53 to 59+24, Lt. & Rt.	74	2,827	Full Depth Patch
	64+76, Lt. to 64+90, Lt.	12	547	Full Depth Patch
	51+55, Rt. to 52+65, Rt.	110	5,906	Full Depth Patch
	53+65, Rt. to 54+42, Rt.	77	1,232	Full Depth Patch
	54+83, Rt. to 55+42, Rt.	59	2,106	Full Depth Patch
	55+79, Rt. to 55+98, Rt.	20	360	Full Depth Patch
	62+40, Rt. to 63+15, Rt.	75	1,119	Full Depth Patch
	62+28 Rt. to 64+89, Rt.	158	1,568	Full Depth Patch
Path	303+71, Lt. to 303+05, Rt.	14	107	Full Depth Patch
Access	200+25, Lt. to 200+44, Lt.	50	287	Full Depth Patch
		Subtotal	28,442	
Entrance Road	13+25 to 13+49, Lt. & Rt.	23	123	Full Depth Patch
	15+24 to 15+74, Lt. & Rt.	50	813	Full Depth Patch
	15+89 to 15+97, Lt. & Rt.	8	128	Full Depth Patch
	16+30 to 17+00, Lt. & Rt.	70	1,072	Full Depth Patch
	25+69 to 31+94, Lt. & Rt.	625	13,689	Full Depth Patch
	33+86 to 34+26, Lt. & Rt.	40	332	Full Depth Patch
	43+78 to 44+18, Lt. & Rt.	40	661	Full Depth Patch
	44+46 to 44+68, Lt. & Rt.	22	334	Full Depth Patch
	45+03, Lt. to 52+63, Lt.	20	121	Full Depth Patch
	52+20, Lt. to 52+63, Lt.	43	308	Full Depth Patch
	53+66 to 53+76, Lt. & Rt.	10	133	Full Depth Patch
	54+75, Lt. 55+02, Lt.	27	197	Full Depth Patch
	54+78, Lt. to 55+27, Lt.	39	240	Full Depth Patch
	65+82 to 65+92, Lt. & Rt.	10	191	Full Depth Patch
		Subtotal	18,342	
		TOTAL	46,784	

U.S. DEPARTMENT OF TRANSPORTATION
FEDERAL HIGHWAY ADMINISTRATION
EASTERN FEDERAL LANDS HIGHWAY DIVISION
STERLING, VIRGINIA

CHESAPEAKE & OHIO CANAL
NATIONAL HISTORICAL PARK
GREAT FALLS ENTRANCE ROAD & PARKING LOTS

PAVEMENT SECTION SCHEDULE

ferner 9/20/2007 8:55:40 AM o:\dlf0001170\01\cad\plans\schedules\sch-pvmt.dgn

NPS NO.	REG	STATE	PROJECT	SHEET NO.
412 / 41,911	NCR	MD	PRA-CHOH 102 (1)	G5

CURB SCHEDULE

ALIGNMENT	STATION LIMITS	ITEM 60901-1700 CURB, CONCRETE, 18-INCH DEPTH	ITEM 60902-0600 CURB, CONCRETE, 8-INCH DEPTH	ITEM 60902-1100 CURB, CONCRETE, 13-INCH DEPTH
Parking Lot	50+34 to 63+40, Rt.			1459 LF
	50+34 to 51+70, Lt.			293 LF
	51+98 to 57+85, Lt.			597 LF
	58+17 to 64+89, Lt.			685 LF
	50+96 to 58+63, C			1802 LF
	58+83 to 66+73, C			1857 LF
Path	302+39 to 304+04, Lt.			440 LF
Entrance Road	11+42 to 13+18, Lt.			454 LF
	12+87 to 15+75, Rt.			288 LF
Access Road	200+43 to 200+51, Rt.			40 LF
Parking lot to Access Road	63+40 to 200+51, Rt.		573 LF	
Access Road	200+51 to 203+58, Rt.	330 LF		
	200+51 to 203+58, Lt.	362 LF		
	TOTAL	692 LF	573 LF	7915 LF

SIDEWALK SCHEDULE

ALIGNMENT	STATION LIMITS	ITEM 61501-0100 SIDEWALK, CONCRETE	ITEM 61501-0500 SIDEWALK, EXPOSED AGGREGATE	ITEM 20303-3200 SIDEWALK REMOVAL, CONCRETE
Parking Lot	51+53 to 64+95, Rt.	929.4		
	55+00 to 55+05, Rt.	22.8		
	61+18 to 61+23, Rt.	22.8		
	64+95 to 65+90	74.4		
Path	64+95 to 303+75, Rt	293.3		
	302+61 to 303+23, Rt	83.3		
	303+69 to 304+20, Rt.	38.3		
	302+63 to 303+28, Rt.	87.0		
Path	303+75 to 308+38		514	
Temp. sidewalk	Near comfort station			60
	TOTAL	1551.3 sq yd	514 sq yd	60 sq yd

NOTES:

1. See Detail E609-1A For Curb Details.
2. Proposed Curb along Great Falls Entrance Road will be tapered per Detail E609-A at each end.

U.S. DEPARTMENT OF TRANSPORTATION
FEDERAL HIGHWAY ADMINISTRATION
EASTERN FEDERAL LANDS HIGHWAY DIVISION
STERLING, VIRGINIA

CHESAPEAKE & OHIO CANAL
NATIONAL HISTORICAL PARK
GREAT FALLS ENTRANCE ROAD & PARKING LOTS

CURB AND GUTTER AND SIDEWALK SCHEDULE

SHEET 5 OF 12

CONSTRUCTION SIGN SCHEDULE

NPS NO.	REG	STATE	PROJECT	SHEET NO.
412 / 41,911	NCR	MD	PRA-CHOH 102 (1)	G6

Sign No.	Text No.	Sign Text	LOCATION Station	LOCATION Side	PANEL SIZE Width (in.)	PANEL SIZE Height (in.)	PANEL SIZE Area (sq ft)	PANEL SIZE Corner Radii (in.)	PANEL SIZE Border Width (in.)	PANEL SIZE Margin Width (in.)	TEXT SIZE Numbers (in.)	TEXT SIZE Upper Case (in.)	TEXT SIZE Lower Case (in.)	TEXT SIZE Series	Color Combination	Quantity	Total Area (sq ft)	Support (No Pay) (ft)	Remarks
1	W20-1		See Note 3		36	36	9	←			See Note 1			→	Black on Orange	2	18	2(11) =22	-
2	G20-2a		See Note 3		36	18	4.5	←			See Note 1			→	Black on Orange	2	9	2(11) =22	-
3	W21-5	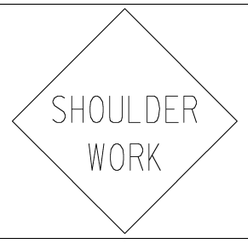	See Note 3		30	30	6.25	←			See Note 1			→	Black on Orange	2	12.5	2(11) =22	-
4	W20-7a	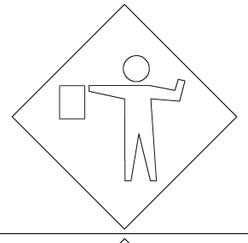	See Note 3		36	36	9	←			See Note 1			→	Black on Orange	2	18	2(11) =22	-
5	W20-4		See Note 3		36	36	9	←			See Note 1			→	Black on Orange	2	18	2(11) =22	-
															Subtotal	10	75.5	110	

NOTES:
1. See "Manual on Uniform Traffic Control Devices for Streets and Highways, 2003 Edition" for dimensions, legend and colors.
2. Locations and lengths of posts are approximations. Determine exact lengths, sizes and locations to match field conditions. Get CO approval prior to ordering material.
3. See Signing and Marking Pavement Plans and/or Traffic Control Plans for locations.

U.S. DEPARTMENT OF TRANSPORTATION
FEDERAL HIGHWAY ADMINISTRATION
EASTERN FEDERAL LANDS HIGHWAY DIVISION
STERLING, VIRGINIA

C&O CANAL HISTORIC PARK
GREAT FALLS ENTRANCE ROAD & PARKING LOTS

CONSTRUCTION SIGN SCHEDULE

9/20/2007 8:55:41 AM c:\dlf0001\170\01\cad\plans\schedules\sch-c-sign.dgn

CONSTRUCTION SIGN SCHEDULE

NPS NO.	REG	STATE	PROJECT	SHEET NO.
412 / 41,911	NCR	MD	PRA-CHOH 102 (1)	G7

Sign No.	Text No.	Sign Text	LOCATION Station	LOCATION Side	PANEL SIZE Width (in.)	PANEL SIZE Height (in.)	PANEL SIZE Area (sq ft)	PANEL SIZE Corner Radii (in.)	PANEL SIZE Border Width (in.)	PANEL SIZE Margin Width (in.)	TEXT SIZE Numbers (in.)	TEXT SIZE Upper Case (in.)	TEXT SIZE Lower Case (in.)	TEXT SIZE Series	Color Combination	Quantity	Total Area (sq ft)	Support (No Pay) (ft)	Remarks
6	W8-7 Mod.	GRAVEL ROAD AHEAD	See Note 3		30	30	6.25	←			See	Note 1		→	Black on Orange	2	12.5	2(12.5) =25	-
7	W13-1	10 M.P.H.	See Note 3		18	18	2.25	←			See	Note 1		→	Black on Orange	2	4.5		Supplemental panel to sign No.6
8	W5-1	ROAD NARROWS	See Note 3		36	36	9	←			See	Note 1		→	Black on Orange	2	18	2(9) =18	-
9	R4-1	DO NOT PASS	See Note 3		24	30	5	←			See	Note 1		→	Black on White	2	10	2(9) =18	-
10	W14-3	NO PASSING ZONE	See Note 3		48	36	6	←			See	Note 1		→	Black on Orange	2	12	2(9) =18	-
8	W8-4 Mod	LOW SHOULDER	See Note 4		30	30	6.25	←			See	Note 1		→	Black on Orange	2	12.5	2(11) =22	-

NOTES:
1. See "Manual on Uniform Traffic Control Devices for Streets and Highways, 2003 Edition" for dimensions, legend and colors.
2. Locations and lengths of posts are approximations. Determine exact lengths, sizes and locations to match field conditions. Get CO approval prior to ordering material.
3. See Signing and Pavement Marking Plans and/or Traffic Control Plans for locations.
4. Location at the discretion of the CO, if warranted.

	Quantity	Total Area (sq ft)	Support (No Pay) (ft)
Subtotal (This sheet)	12	69.5	101
Subtotal (All sheets)	22	145	211
ROUNDED TOTAL	22	150	215

U.S. DEPARTMENT OF TRANSPORTATION
FEDERAL HIGHWAY ADMINISTRATION
EASTERN FEDERAL LANDS HIGHWAY DIVISION
STERLING, VIRGINIA

C&O CANAL HISTORIC PARK
GREAT FALLS ENTRANCE ROAD & PARKING LOTS

CONSTRUCTION SIGN SCHEDULE

9/20/2007 8:55:42 AM c:\dlf0001170\0\cad\plans\schedules\sch-c-sign.dgn

PERMANENT SIGN SCHEDULE

NPS NO.	REG	STATE	PROJECT	SHEET NO.
412 / 41,911	NCR	MD	PRA-CHOH 102 (1)	G8

Sign No.	Text No.	Sign Text	LOCATION Station	LOCATION Side	PANEL SIZE Width (in.)	PANEL SIZE Height (in.)	PANEL SIZE Area (sq ft)	PANEL SIZE Corner Radii (in.)	PANEL SIZE Border Width (in.)	PANEL SIZE Margin Width (in.)	TEXT SIZE Numbers (in.)	TEXT SIZE Upper Case (in.)	TEXT SIZE Lower Case (in.)	TEXT SIZE Series	Color Combination	Quantity	Total Area (sq ft)	Support (No Pay) (ft)	Remarks
1	R7-8		See note 3		12	18	1.5	←			See Note 1			→	Blue & Green on White	11	16.5	11(9.5) = 104.5	Supplemental to Sign No. 11
2	R3-4	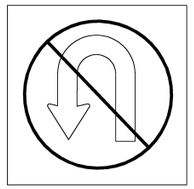	11+95	Lt.	24	24	4	←			See Note 1			→	Black & Red on White	1	4	4(10) = 40	-
3	Special	EMERGENCY AND AUTHORIZED VEHICLES ONLY	See Note 3		36	24	6	←			See Note 1			→	Black on White	2	12	1(10) = 10	-
4	R2-1	SPEED LIMIT 15	See note 3		24	30	5	←			See Note 1			→	Black on White	1	5	2(10.5) = 21	-
5	R7-1	NO PARKING ANY TIME	See note 3		12	18	1.5	←			See Note 1			→	Red on White	25	37.5	25(9.5) = 237.5	-
															Subtotal	40	75	413	

NOTES:
1. See "Manual on Uniform Traffic Control Devices for Streets and Highways, 2003 Edition" for dimensions, legend and colors.
2. Locations and lengths of posts are approximations. Determine exact lengths, sizes and locations to match field conditions. Get CO approval prior to ordering material.
3. See Signing and Pavement Marking Plans and/or Traffic Control Plans for locations.

U.S. DEPARTMENT OF TRANSPORTATION
FEDERAL HIGHWAY ADMINISTRATION
EASTERN FEDERAL LANDS HIGHWAY DIVISION
STERLING, VIRGINIA

C&O CANAL HISTORIC PARK
GREAT FALLS ENTRANCE ROAD & PARKING LOTS

PERMANENT SIGN SCHEDULE

10/12/2007 11:37:13 AM Q:\DIFGOOLITON\CADVPlans\Schedules\sch-p-sign.dgn

PERMANENT SIGN SCHEDULE

NPS NO.	REG	STATE	PROJECT	SHEET NO.
412 / 41,911	NCR	MD	PRA-CHOH 102 (1)	G9

Sign No.	Text No.	Sign Text	LOCATION Station	LOCATION Side	PANEL SIZE Width (in.)	PANEL SIZE Height (in.)	PANEL SIZE Area (sq ft)	PANEL SIZE Corner Radii (in.)	PANEL SIZE Border Width (in.)	PANEL SIZE Margin Width (in.)	TEXT SIZE Numbers (in.)	TEXT SIZE Upper Case (in.)	TEXT SIZE Lower Case (in.)	TEXT SIZE Series	Color Combination	Quantity	Total Area (sq ft)	Support (No Pay) (ft)	Remarks
6	W1-5	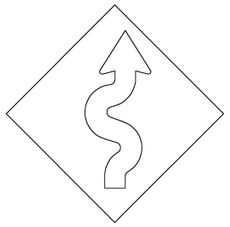	See Note 3	Lt.	30	30	6.25	←			See Note 1			→	Black on Yellow	2	12.5	2(10.5) =21	-
7	W3-5	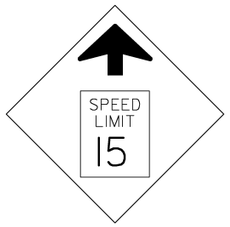	46+75	Lt.	36	36	9	←			See Note 1			→	Black on Yellow (Retro-reflective)	1	9	2(10.5) = 21	-
8	R2-1		See Note 3		24	30	5	←			See Note 1			→	Black on White	2	10	1(10.5) = 10.5	-
9	R2-1(RE)		71+04	Lt.	24	18	3	←			See Note 1			→	Black on White	1	3	--	- Supplemental panel to sign No. 9
															Subtotal	6	34.5	52.5	

NOTES:
1. See "Manual on Uniform Traffic Control Devices for Streets and Highways, 2003 Edition" for dimensions, legend and colors.
2. Locations and lengths of posts are approximations. Determine exact lengths, sizes and locations to match field conditions. Get CO approval prior to ordering material.
3. See Signing and Pavement Marking Plans and/or Traffic Control Plans for locations.

U.S. DEPARTMENT OF TRANSPORTATION
FEDERAL HIGHWAY ADMINISTRATION
EASTERN FEDERAL LANDS HIGHWAY DIVISION
STERLING, VIRGINIA

C&O CANAL HISTORIC PARK
GREAT FALLS ENTRANCE ROAD & PARKING LOTS

PERMANENT SIGN SCHEDULE

9/20/2007 8:55:45 AM c:\dlf0001\f70\0\cad\plans\schedules\sch-p-sign.dgn
sch-sign.dgn

PERMANENT SIGN SCHEDULE

NPS NO.	REG	STATE	PROJECT	SHEET NO.
412 / 41,911	NCR	MD	PRA-CHOH 102 (1)	G10

Sign No.	Text No.	Sign Text	LOCATION Station	LOCATION Side	PANEL SIZE Width (in.)	PANEL SIZE Height (in.)	PANEL SIZE Area (sq ft)	PANEL SIZE Corner Radii (in.)	PANEL SIZE Border Width (in.)	PANEL SIZE Margin Width (in.)	TEXT SIZE Numbers (in.)	TEXT SIZE Upper Case (in.)	TEXT SIZE Lower Case (in.)	TEXT SIZE Series	Color Combination	Quantity	Total Area (sq ft)	Support (No Pay) (ft)	Remarks
10	R7-8b	VAN ACCESSIBLE	See note 3		12	6	0.5	←			See	Note 1		→	White on Blue	2	1.0	-	Supplemental to Sign No.1
11	D9-16 Mod	BUS PARKING	See note 3		24	18	3	←			See	Note 1		→	White on Blue	1	3	1(8.5) =8.5	-
12	D9-16 Mod	BUS PARKING ONLY	See note 3		24	18	3	←			See	Note 1		→	White on Blue	2	6	2(8.5) =17.0	-
13	M6-3	↑	See note 3		21	15	2.19	←			See	Note 1		→	Black on White	1	2.19	-	-

NOTES:
1. See "Manual on Uniform Traffic Control Devices for Streets and Highways, 2003 Edition" for dimensions, legend and colors.
2. Locations and lengths of posts are approximations. Determine exact lengths, sizes and locations to match field conditions. Get CO approval prior to ordering material.
3. See Location Map and/or Traffic Control Plans for locations.

Subtotal (This sheet)	6	12.19	25.5
Subtotal (All sheets)	52	121.69	491
ROUNDED TOTAL	52	122	500

U.S. DEPARTMENT OF TRANSPORTATION
FEDERAL HIGHWAY ADMINISTRATION
EASTERN FEDERAL LANDS HIGHWAY DIVISION
STERLING, VIRGINIA

C&O CANAL HISTORIC PARK
GREAT FALLS ENTRANCE ROAD & PARKING LOTS

PERMANENT SIGN SCHEDULE

9/20/2007 8:55:46 AM c:\dlf0001170\cad\plans\schedules\sch-p-sign.dgn
sch-sign.dgn

NPS NO.	REG	STATE	PROJECT	SHEET NO.
412 / 41,911	NCR	MD	PRA-CHOH 102 (1)	G11

Note:

1. Contractor to provide all Pepco electric manholes in accordance with AC Miller Concrete Products, Inc.
2. Contractor to provide all Verizon communication manholes in accordance with AC Miller Concrete Products, Inc.

UTILITY STRUCTURE SCHEDULE (ITEMS 63623-1000, 2000)

ID	Utility Company	Station	Offset	Dimensions (LxWxH)	ITEM 63623-1000 (EACH)	ITEM 63623-2000 (EACH)
PMH-1	PEPCO	13+90.0	16.0', Rt.	6'x12'x6.5'	1	
PMH-2	PEPCO	19+50.0	15.7', Rt.	6'x12'x6.5'	1	
PMH-3	PEPCO	25+50.0	26.0', Rt.	6'x12'x6.5'	1	
PMH-4	PEPCO	31+50.0	17.50', Rt.	6'x12'x6.5'	1	
PMH-5	PEPCO	37+50.0	16.7', Rt.	6'x12'x6.5'	1	
PMH-6	PEPCO	43+50.0	14.1', Rt.	6'x12'x6.5'	1	
PMH-7	PEPCO	50+00.0	13.9', Rt.	6'x12'x6.5'	1	
PMH-8	PEPCO	54+00.0	17.6', Rt.	6'x12'x6.5'	1	
PMH-9	PEPCO	60+00.0	15.9', Rt.	6'x12'x6.5'	1	
PMH-10	PEPCO	66+00.0	10.2', Rt.	6'x12'x6.5'	1	
PMH-11	PEPCO	72+00.0	7.2', Rt.	6'x12'x6.5'	1	
PMH-12	PEPCO	73+05.2	10.2', Rt.	6'x12'x6.5'	1	
VMH-1	VERIZON	13+78.7	21.0', Rt.	4'x6'x6.5'		1
VMH-2	VERIZON	19+38.7	20.7', Rt.	4'x6'x6.5'		1
VMH-3	VERIZON	25+38.7	31.0', Rt.	4'x6'x6.5'		1
VMH-4	VERIZON	31+38.6	22.5', Rt.	4'x6'x6.5'		1
VMH-5	VERIZON	37+38.6	21.6', Rt.	4'x6'x6.5'		1
VMH-6	VERIZON	43+38.7	19.1', Rt.	4'x6'x6.5'		1
VMH-7	VERIZON	50+38.7	19.1', Rt.	4'x6'x6.5'		1
VMH-8	VERIZON	53+88.7	22.6', Rt.	4'x6'x6.5'		1
VMH-9	VERIZON	59+88.7	20.9', Rt.	4'x6'x6.5'		1
VMH-10	VERIZON	65+88.7	15.2', Rt.	4'x6'x6.5'		1
VMH-11	VERIZON	71+87.8	12.2', Rt.	4'x6'x6.5'		1
VMH-12	VERIZON	73+05.2	18.14', Rt.	4'x6'x6.5'		1
				TOTAL	12	12

U.S. DEPARTMENT OF TRANSPORTATION
FEDERAL HIGHWAY ADMINISTRATION
EASTERN FEDERAL LANDS HIGHWAY DIVISION
STERLING, VIRGINIA

CHESAPEAKE & OHIO CANAL
NATIONAL HISTORICAL PARK
GREAT FALLS ENTRANCE ROAD & PARKING LOTS

UTILITY STRUCTURE SCHEDULE

SHEET 11 OF 12

NPS NO.	REG	STATE	PROJECT	SHEET NO.
412 / 41,911	NCR	MD	PRA-CHOH 102 (1)	G12

EARTHWORK SUMMARY

Sheet	Station	Pay Item 20401-0000 Roadway Excavation (20401-0000) Cuyd	No Pay Roadway Embankment Cuyd	Pay Item 20410-0000 Select Borrow Cuyd	Remarks
K1	Upper Parking Lot	181.0	0.0		
K2	Lower Parking Lot	191.0	553.0	1500	
K2	10+00 to 16+50	307.0	62.0		
K3	16+50 to 30+50	613.0	669.0		
K4	30+50 to 44+00	746.0	166.0		
K5	44+00 to 58+00	933.0	109.0		
K6	58+00 to 73+23.70	830.0	178.0		
	Subtotal	3801.0	1737	1500	
	Rounded Total	5,000	2,000	1,500	

U.S. DEPARTMENT OF TRANSPORTATION
FEDERAL HIGHWAY ADMINISTRATION
EASTERN FEDERAL LANDS HIGHWAY DIVISION
STERLING, VIRGINIA

CHESAPEAKE & OHIO CANAL
NATIONAL HISTORICAL PARK
GREAT FALLS ENTRANCE ROAD & PARKING LOTS

EARTHWORK SUMMARY

NPS NO.	REG	STATE	PROJECT	SHEET NO.
412 / 41,911	NCR	MD	PRA-CHOH 102 (1)	HI

SURVEY CONTROL POINTS				
POINT	NORTHING	EASTING	ELEVATION	REMARKS
CP 10	484401.4060	1246813.5890	390.66	PK NAIL WITH WASHER
CP 11	484193.6080	1246747.4250	370.46	ALUM.CAP AND REBAR
TRAV 34	486017.5550	1241714.4550	170.57	BRASS DISK ON MONUMENT
TRAV 35	485584.5530	1241775.7530	162.40	PK NAIL WITH WASHER

SURVEY TRAVERSE POINTS			
DESIGNATION	NORTHING	EASTING	ELEVATION
POINT 10	484401.4060	1246813.5890	390.66
POINT 11	484193.6080	1246747.4250	370.46
POINT 12	484225.6913	1246371.8583	380.90
POINT 13	481193.8467	1245964.6843	358.86
POINT 14	484310.3967	1245697.4047	340.14
POINT 15	484056.9676	1245266.4991	339.57
POINT 16	484076.3781	1244815.0466	350.06
POINT 17	484185.1030	1244636.8093	346.46
POINT 18	484509.8368	1244539.8168	328.49
POINT 19	485131.6608	1244648.4598	293.36
POINT 20	485604.2233	1244426.1839	279.05
POINT 21	486028.6078	1244298.9633	278.27
POINT 22	486061.6390	1243965.9349	261.58
POINT 23	486017.1810	1243494.0969	231.93
POINT 24	486293.9105	1243182.4483	207.62
POINT 25	486247.5832	1242747.4680	190.63
POINT 26	486190.1202	1242206.1312	177.14
POINT 27	486595.5312	1242244.8027	184.07
POINT 28	487121.4506	1242475.1875	185.51
POINT 29	487589.6324	1242776.3841	185.76
POINT 30	487548.2318	1242589.7642	175.55
POINT 31	486868.5719	1242280.7747	178.82
POINT 32	486365.4772	1242113.7524	173.87
POINT 33	486082.3864	1241988.0495	175.45
POINT 34	486017.5550	1241714.4550	170.57
POINT 35	485584.5530	1241775.7530	162.40
POINT 36	487228.4472	1242694.4878	200.75
POINT 37	487348.9455	1242732.1684	201.06
POINT 50	485814.3483	1241913.3998	170.48

NOTE:
SEE ROADWAY PLANS FOR TRAVERSE POINT LOCATIONS.

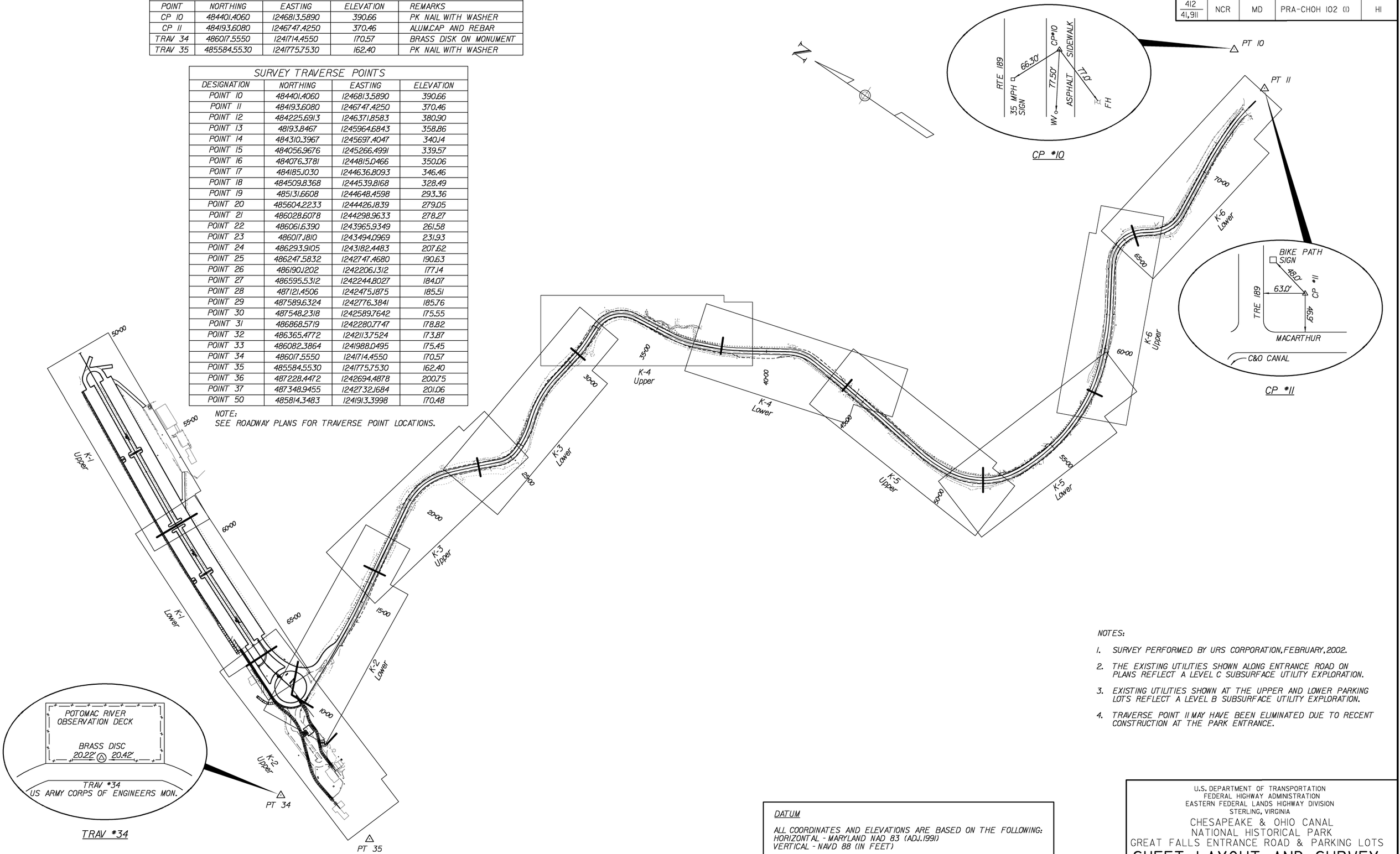

NOTES:

1. SURVEY PERFORMED BY URS CORPORATION, FEBRUARY, 2002.
2. THE EXISTING UTILITIES SHOWN ALONG ENTRANCE ROAD ON PLANS REFLECT A LEVEL C SUBSURFACE UTILITY EXPLORATION.
3. EXISTING UTILITIES SHOWN AT THE UPPER AND LOWER PARKING LOTS REFLECT A LEVEL B SUBSURFACE UTILITY EXPLORATION.
4. TRAVERSE POINT 11 MAY HAVE BEEN ELIMINATED DUE TO RECENT CONSTRUCTION AT THE PARK ENTRANCE.

DATUM

ALL COORDINATES AND ELEVATIONS ARE BASED ON THE FOLLOWING:
HORIZONTAL - MARYLAND NAD 83 (ADJ.1991)
VERTICAL - NAVD 88 (IN FEET)

U.S. DEPARTMENT OF TRANSPORTATION
FEDERAL HIGHWAY ADMINISTRATION
EASTERN FEDERAL LANDS HIGHWAY DIVISION
STERLING, VIRGINIA

CHESAPEAKE & OHIO CANAL
NATIONAL HISTORICAL PARK
GREAT FALLS ENTRANCE ROAD & PARKING LOTS

SHEET LAYOUT AND SURVEY INFORMATION SHEET

0 200 400
SCALE IN FEET

NPS NO.	REG	STATE	PROJECT	SHEET NO.
412 / 41,911	NCR	MD	PRA-CHOH 102 (1)	11

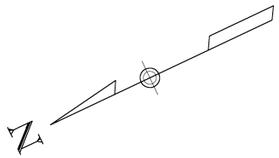

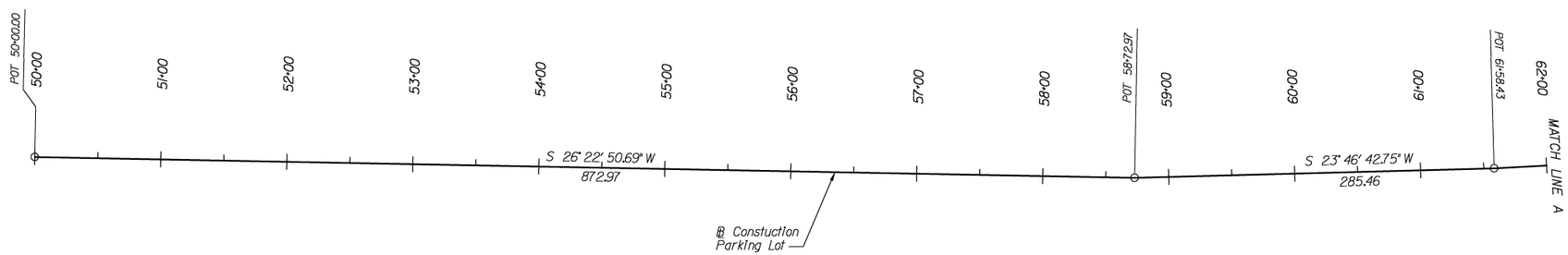

COORDINATE TABLE				
DESIGNATION		STATION	NORTHING	EASTING
B/L PARKING LOT				
	POT	50+00.000	487,852.963	1,242,824.468
	POT	58+72.973	487,070.900	1,242,436.576
	POT	61+58.430	486,809.676	1,242,321.479

U.S. DEPARTMENT OF TRANSPORTATION
FEDERAL HIGHWAY ADMINISTRATION
EASTERN FEDERAL LANDS HIGHWAY DIVISION
STERLING, VIRGINIA

CHESAPEAKE & OHIO CANAL
NATIONAL HISTORICAL PARK
GREAT FALLS ENTRANCE ROAD & PARKING LOTS

GEOMETRIC LAYOUT

0 60 120
SCALE IN FEET

SHEET 1 OF 6

NPS NO.	REG	STATE	PROJECT	SHEET NO.
412 / 41,911	NCR	MD	PRA-CHOH 102 (1)	12

B/L PARKING LOT CURVE DATA

LOT 1
Δ = 14° 33' 00.32" (LT)
D= 31° 49' 51.56"
R= 180.00'
T= 22.98'
L= 45.71'

B/L PATH CURVE DATA

PATH 1
Δ = 21° 05' 10.64" (LT)
D= 28° 38' 52.40"
R= 200.00'
T= 37.22'
L= 73.61'

PATH 2
Δ = 39° 35' 38.15" (RT)
D= 28° 38' 52.40"
R= 200.00'
T= 71.99'
L= 138.21'

PATH 3
Δ = 26° 21' 39.18" (LT)
D= 27° 56' 56.98"
R= 205.00'
T= 48.01'
L= 94.32'

B/L ACCESS ROAD CURVE DATA

ACCESS ROAD 1
Δ= 32° 05' 21" (RT)
R= 60.00'
T= 17.26'
L= 33.60'

ACCESS ROAD 2
Δ= 31° 27' 45.20" (LT)
R= 80.00'
T= 24.56'
L= 47.66'

ACCESS ROAD 3
Δ= 25° 30' 47" (RT)
R= 60.00'
T= 13.58'
L= 26.72'

ACCESS ROAD 4
Δ= 25° 30' 47" (LT)
R= 65.00'
T= 14.72'
L= 28.94'

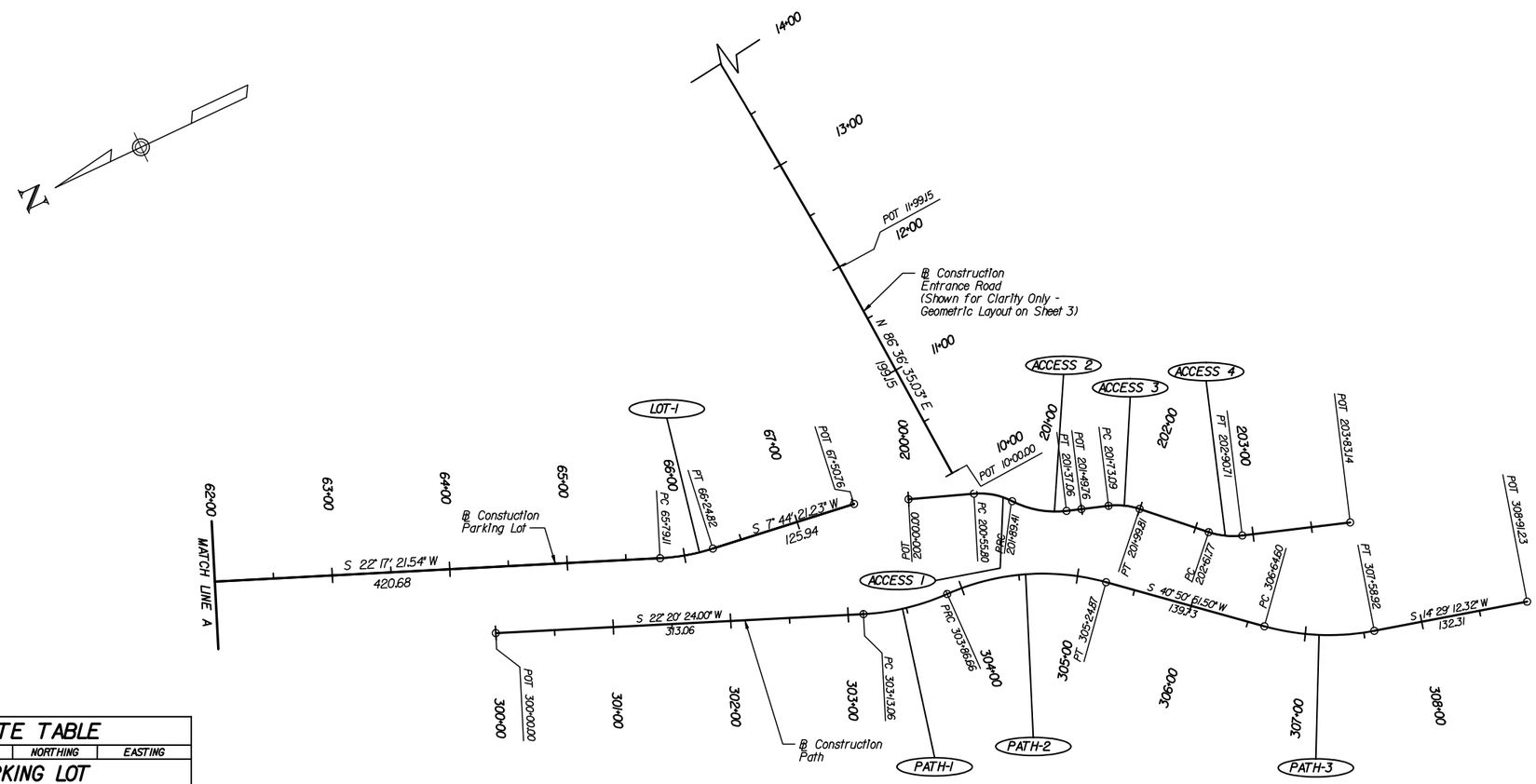

COORDINATE TABLE

DESIGNATION		STATION	NORTHING	EASTING
B/L PARKING LOT				
LOT 1	POT	61+58.430	486,809.676	1,242,321.479
	PC	65+79.112	486,420.426	1,242,161.921
	PI	66+02.091	486,399.165	1,242,153.206
	PT	66+24.822	486,376.395	1,242,150.111
	POT	67+50.763	486,251.602	1,242,133.152
B/L PATH				
PATH 1	POT	300+00.000	486,573.952	1,242,164.017
	PC	303+13.058	486,284.391	1,242,045.023
	PI	303+50.281	486,249.962	1,242,030.874
	PRC	303+86.663	486,212.747	1,242,030.059
PATH 2	PRC	303+86.663	486,212.747	1,242,030.059
	PI	304+58.655	486,140.772	1,242,028.484
	PT	305+24.872	486,086.313	1,241,981.398
PATH 3	PC	306+64.603	485,980.613	1,241,890.006
	PI	307+12.612	485,944.297	1,241,858.606
	PT	307+58.920	485,897.814	1,241,846.597
	POT	308+91.226	485,769.715	1,241,813.500
B/L ACCESS ROAD				
ACCESS 1	POT	200+00.00	486,208.038	1,242,116.978
	PC	200+55.80	486,155.733	1,242,097.533
	PRC	200+89.41	486,129.051	1,242,077.834
ACCESS 2	PRC	200+89.41	486,129.051	1,242,077.834
	PT	201+37.06	486,090.782	1,242,050.623
ACCESS 3	POT	201+49.76	486,078.735	1,242,046.627
	PC	201+73.09	486,056.588	1,242,039.282
	PT	201+99.81	486,033.901	1,242,025.593
ACCESS 4	PC	202+61.77	485,989.227	1,241,982.660
	PT	202+90.71	485,964.649	1,241,967.830
	POT	203+83.14	485,876.917	1,241,938.732

U.S. DEPARTMENT OF TRANSPORTATION
FEDERAL HIGHWAY ADMINISTRATION
EASTERN FEDERAL LANDS HIGHWAY DIVISION
STERLING, VIRGINIA

CHESAPEAKE & OHIO CANAL
NATIONAL HISTORICAL PARK
GREAT FALLS ENTRANCE ROAD & PARKING LOTS

GEOMETRIC LAYOUT

0 60 120
SCALE IN FEET

SHEET 2 OF 6

$USER$ $DATE$ 10:22:08 AM$FILE$

NPS NO.	REG	STATE	PROJECT	SHEET NO.
412 / 41,911	NCR	MD	PRA-CHOH 102 (1)	13

B/L ENTRANCE ROAD CURVE DATA

ENT 1
P.I. STA. 14+34.86
Δ = 4° 17' 38.37" (LT)
D = 3° 10' 59.16"
R = 1,800.00
T = 67.48
L = 134.90
E = 1.26

ENT 2
P.I. STA. 20+97.43
Δ = 51° 31' 46.47" (RT)
D = 20° 50' 05.38"
R = 275.00
T = 132.73
L = 247.32
E = 30.36

ENT 3
P.I. STA. 23+25.40
Δ = 3° 14' 50.36" (RT)
D = 1° 25' 56.62"
R = 4,000.00
T = 113.38
L = 226.71
E = 1.61

ENT 4
P.I. STA. 24+87.27
Δ = 42° 26' 44.32" (LT)
D = 45° 50' 11.84"
R = 125.00
T = 48.54
L = 92.60
E = 9.09

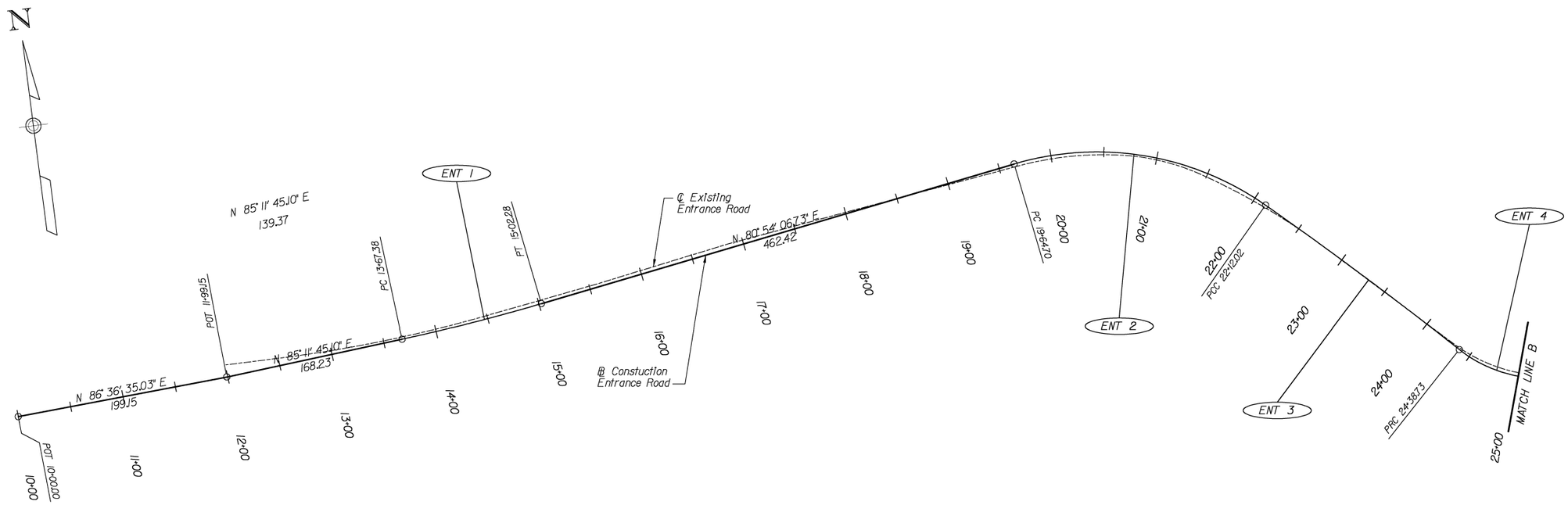

COORDINATE TABLE

DESIGNATION		STATION	NORTHING	EASTING
B/L ENTRANCE ROAD				
	POT	10+00.000	486,165.004	1,242,121.183
	POT	11+99.145	486,176.781	1,242,319.979
	POT	10+00.000	486,165.004	1,242,121.183
	POT	11+99.145	486,176.781	1,242,319.979
ENT 1	PC	13+67.380	486,190.870	1,242,487.623
	PI	14+34.861	486,196.522	1,242,554.867
	PT	15+02.280	486,207.193	1,242,621.500
ENT 2	PC	19+64.697	486,280.313	1,243,078.099
	PI	20+97.428	486,301.301	1,243,209.161
	PCC	22+12.021	486,211.746	1,243,307.128
ENT 3	PCC	22+12.021	486,211.746	1,243,307.128
	PI	23+25.404	486,135.245	1,243,390.815
	PRC	24+38.727	486,054.127	1,243,470.034
ENT 4	PRC	24+38.727	486,054.127	1,243,470.034
	PI	24+87.268	486,019.399	1,243,503.949
	PCC	25+31.329	486,016.661	1,243,552.413

U.S. DEPARTMENT OF TRANSPORTATION
FEDERAL HIGHWAY ADMINISTRATION
EASTERN FEDERAL LANDS HIGHWAY DIVISION
STERLING, VIRGINIA

CHESAPEAKE & OHIO CANAL
NATIONAL HISTORICAL PARK
GREAT FALLS ENTRANCE ROAD & PARKING LOTS

GEOMETRIC LAYOUT

0 60 120
SCALE IN FEET

SHEET 3 OF 6

NPS NO.	REG	STATE	PROJECT	SHEET NO.
412 / 41,911	NCR	MD	PRA-CHOH 102 (1)	14

B/L ENTRANCE ROAD CURVE DATA

ENT 5
P.J.ST A. 26+08.90
Δ = 21° 56' 58.73" (LT)
D = 14° 19' 26.20"
R = 400.00
T = 77.57
L = 153.24
E = 7.45

ENT 6
P.J.ST A. 27+95.83
Δ = 27° 11' 38.54" (RT)
D = 12° 27' 20.18"
R = 460.00
T = 111.26
L = 218.33
E = 13.26

ENT 7
P.J.ST A. 30+78.26
Δ = 11° 09' 23.70" (LT)
D = 9° 32' 57.47"
R = 600.00
T = 58.60
L = 116.83
E = 2.85

ENT 8
P.J.ST A. 33+15.38
Δ = 86° 14' 17.51" (RT)
D = 42° 26' 28.75"
R = 135.00
T = 126.42
L = 203.19
E = 49.95

ENT 9
P.J.ST A. 36+26.39
Δ = 16° 40' 08.83" (LT)
D = 14° 19' 26.20"
R = 400.00
T = 58.60
L = 116.37
E = 4.27

ENT 10
P.J.ST A. 38+21.90
Δ = 10° 06' 05.38" (LT)
D = 8° 48' 53.05"
R = 650.00
T = 57.45
L = 114.60
E = 2.53

ENT 11
P.J.ST A. 41+59.56
Δ = 37° 52' 32.79" (RT)
D = 32° 44' 25.60"
R = 175.00
T = 60.05
L = 115.68
E = 10.01

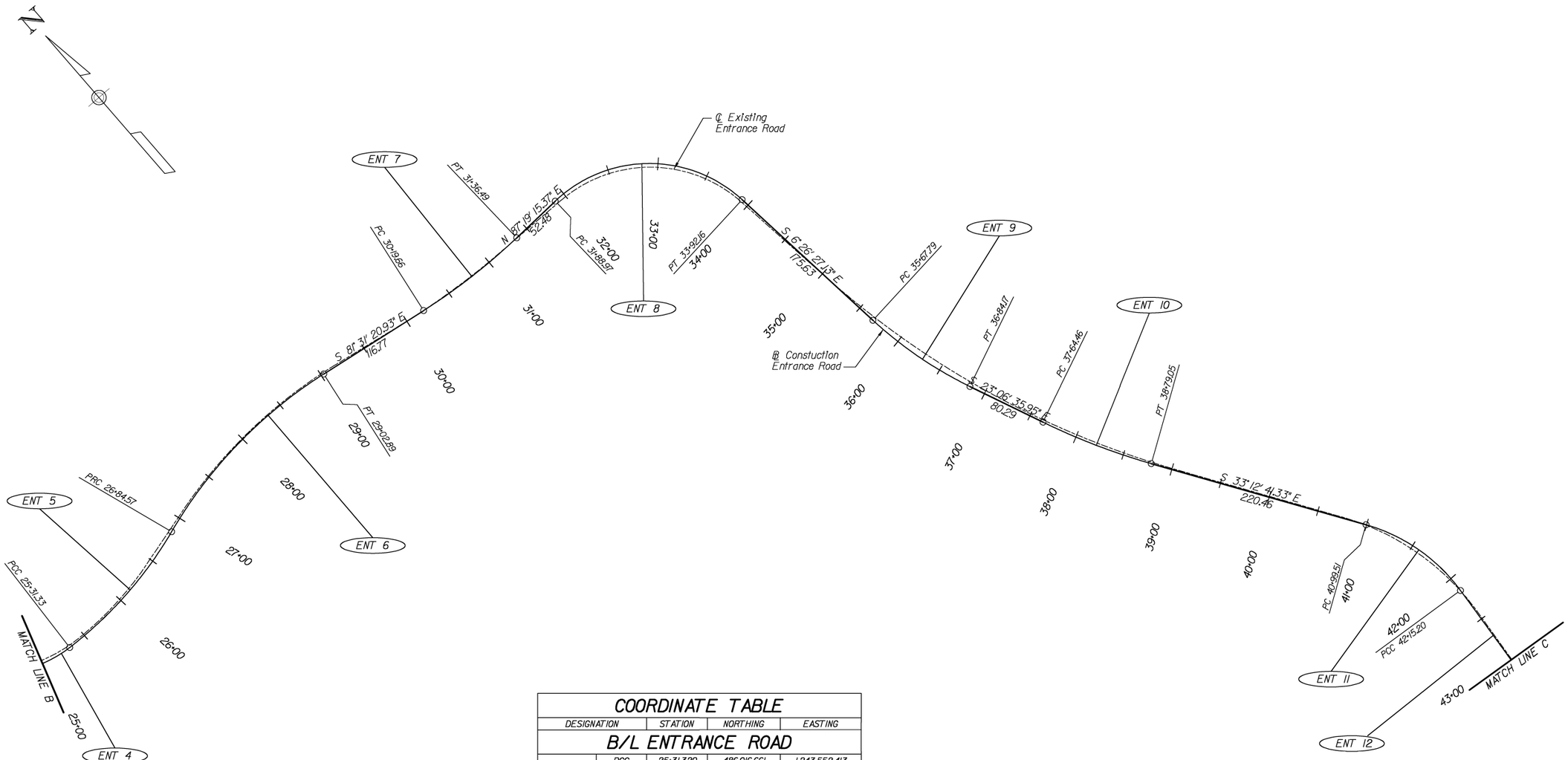

COORDINATE TABLE

DESIGNATION		STATION	NORTHING	EASTING
B/L ENTRANCE ROAD				
ENT 5	PCC	25+31.329	486,016.661	1,243,552.413
	PI	26+08.899	486,012.286	1,243,629.859
	PRC	26+84.566	486,037.177	1,243,703.327
ENT 6	PRC	26+84.566	486,037.177	1,243,703.327
	PI	27+95.827	486,072.879	1,243,808.704
	PT	29+02.894	486,056.477	1,243,918.748
ENT 7	PC	30+19.662	486,039.263	1,244,034.240
	PI	30+78.263	486,030.624	1,244,092.201
	PT	31+36.493	486,033.363	1,244,150.738
ENT 8	PC	31+88.968	486,035.816	1,244,203.156
	PI	33+15.383	486,041.725	1,244,329.433
	PT	33+92.162	485,916.107	1,244,343.614
ENT 9	PC	35+67.793	485,741.585	1,244,363.316
	PI	36+26.393	485,683.355	1,244,369.889
	PT	36+84.165	485,629.457	1,244,392.890
ENT 10	PC	37+64.456	485,555.610	1,244,424.403
	PI	38+21.904	485,502.772	1,244,446.952
	PT	38+79.054	485,454.708	1,244,478.418
ENT 11	PC	40+99.512	485,270.261	1,244,599.169
	PI	41+59.557	485,220.024	1,244,632.058
	PCC	42+15.197	485,160.178	1,244,627.175
ENT 12	PC	42+15.197	485,160.178	1,244,627.175
	PI	45+24.213	484,852.185	1,244,602.047
	PRC	48+33.076	484,546.018	1,244,560.175

U.S. DEPARTMENT OF TRANSPORTATION
FEDERAL HIGHWAY ADMINISTRATION
EASTERN FEDERAL LANDS HIGHWAY DIVISION
STERLING, VIRGINIA

CHESAPEAKE & OHIO CANAL
NATIONAL HISTORICAL PARK
GREAT FALLS ENTRANCE ROAD & PARKING LOTS

GEOMETRIC LAYOUT

0 60 120
SCALE IN FEET

SHEET 4 OF 6

NPS NO.	REG	STATE	PROJECT	SHEET NO.
412 / 41,911	NCR	MD	PRA-CHOH 102 (1)	15

B/L ENTRANCE ROAD CURVE DATA

ENT 12
P.J.S.T.A. 45+24.21
Δ = 3° 07' 23.65" (RT)
D = 0° 30' 19.72"
R = 11,335.00
T = 309.02
L = 617.88
E = 4.21

ENT 13
P.J.S.T.A. 49+12.80
Δ = 14° 39' 13.63" (LT)
D = 9° 14' 28.52"
R = 620.00
T = 79.72
L = 158.57
E = 5.10

ENT 14
P.J.S.T.A. 51+79.62
Δ = 59° 20' 02.70" (LT)
D = 17° 21' 44.49"
R = 330.00
T = 187.98
L = 341.74
E = 49.78

ENT 15
P.J.S.T.A. 54+43.53
Δ = 14° 46' 01.11" (LT)
D = 6° 44' 26.45"
R = 850.00
T = 110.15
L = 219.07
E = 7.11

ENT 16
P.J.S.T.A. 55+79.79
Δ = 6° 15' 24.90" (LT)
D = 11° 27' 32.96"
R = 500.00
T = 27.33
L = 54.60
E = 0.75

ENT 17
P.J.S.T.A. 58+09.10
Δ = 25° 48' 21.20" (LT)
D = 7° 38' 21.97"
R = 750.00
T = 171.81
L = 337.80
E = 19.43

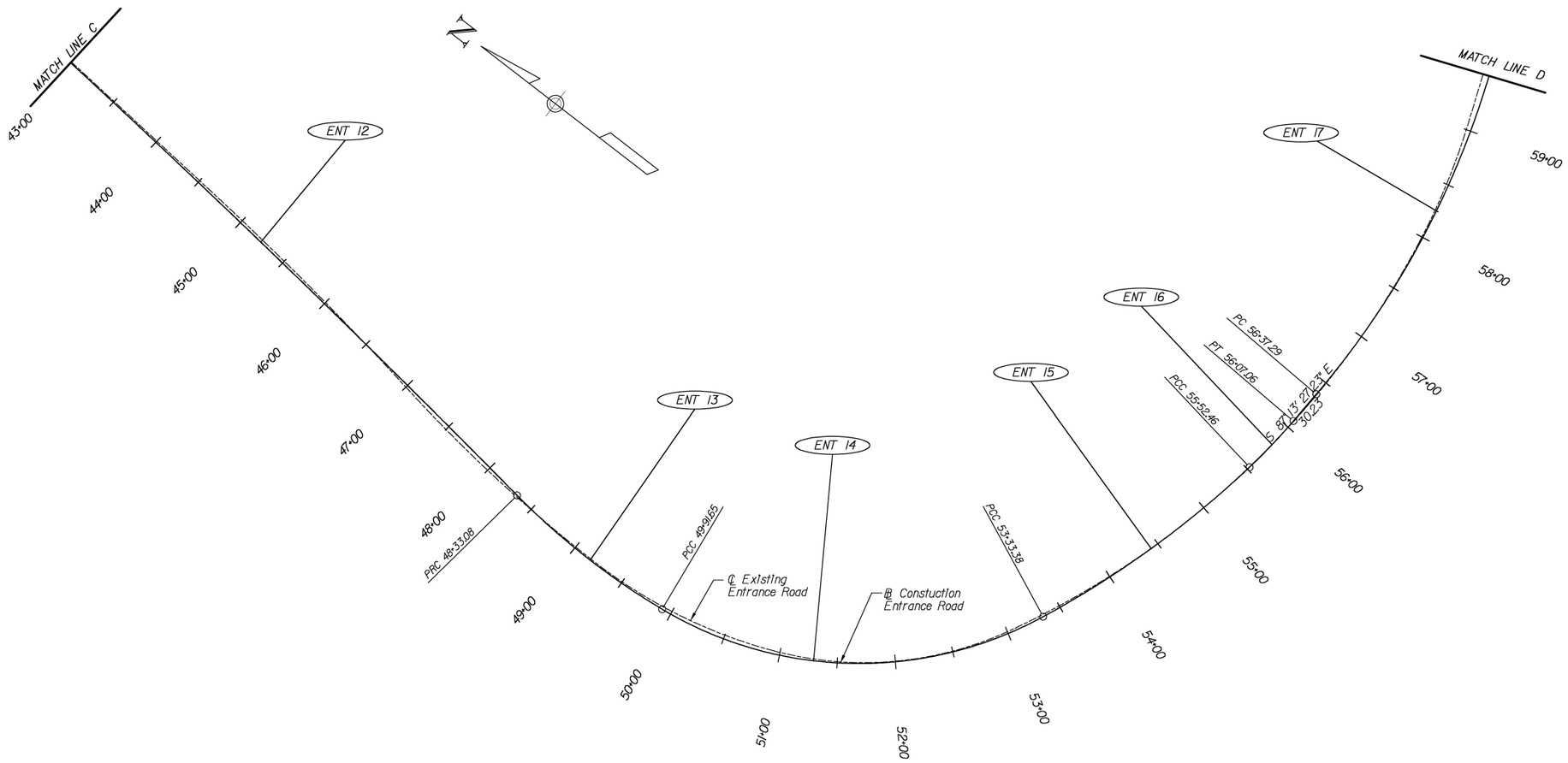

COORDINATE TABLE

DESIGNATION		STATION	NORTHING	EASTING
B/L ENTRANCE ROAD				
ENT 13	PRC	48+33.076	484,546.018	1,244,560.175
	PI	49+12.796	484,467.034	1,244,549.373
	PCC	49+91.645	484,387.886	1,244,558.904
ENT 14	PCC	49+91.645	484,387.886	1,244,558.904
	PI	51+79.622	484,201.257	1,244,581.377
	PCC	53+33.385	484,125.401	1,244,753.369
ENT 15	PCC	53+33.385	484,125.401	1,244,753.369
	PI	54+43.532	484,080.952	1,244,854.149
	PCC	55+52.457	484,063.660	1,244,962.929
ENT 16	PCC	55+52.457	484,063.660	1,244,962.929
	PI	55+79.786	484,059.369	1,244,989.918
	PT	56+07.059	484,058.046	1,245,017.215
ENT 17	PC	56+37.288	484,056.582	1,245,047.408
	PI	58+09.101	484,048.261	1,245,219.020
	PT	59+75.086	484,115.477	1,245,377.139

U.S. DEPARTMENT OF TRANSPORTATION
FEDERAL HIGHWAY ADMINISTRATION
EASTERN FEDERAL LANDS HIGHWAY DIVISION
STERLING, VIRGINIA

CHESAPEAKE & OHIO CANAL
NATIONAL HISTORICAL PARK
GREAT FALLS ENTRANCE ROAD & PARKING LOTS

GEOMETRIC LAYOUT

0 60 120
SCALE IN FEET

SHEET 5 OF 6

NPS NO.	REG	STATE	PROJECT	SHEET NO.
412 / 41,911	NCR	MD	PRA-CHOH 102 (1)	16

B/L ENTRANCE ROAD CURVE DATA

ENT 18
P.J. STA. 60+94.31
Δ = 8° 56' 50.67" (LT)
D = 5° 43' 46.48"
R = 1,000.00
T = 78.24
L = 156.16
E = 3.06

ENT 19
P.J. STA. 65+06.20
Δ = 84° 23' 20.96" (RT)
D = 39° 30' 51.59"
R = 145.00
T = 131.45
L = 213.57
E = 50.72

ENT 20
P.J. STA. 67+17.60
Δ = 58° 10' 07.72" (LT)
D = 38° 11' 49.87"
R = 150.00
T = 83.44
L = 152.29
E = 21.64

ENT 21
P.J. STA. 71+46.79
Δ = 8° 45' 57.82" (RT)
D = 3° 49' 10.99"
R = 1,500.00
T = 114.97
L = 229.49
E = 4.40

ENT 22
P.J. STA. 73+03.34
Δ = 8° 00' 48.12" (RT)
D = 9° 32' 57.47"
R = 600.00
T = 42.03
L = 83.92
E = 1.47

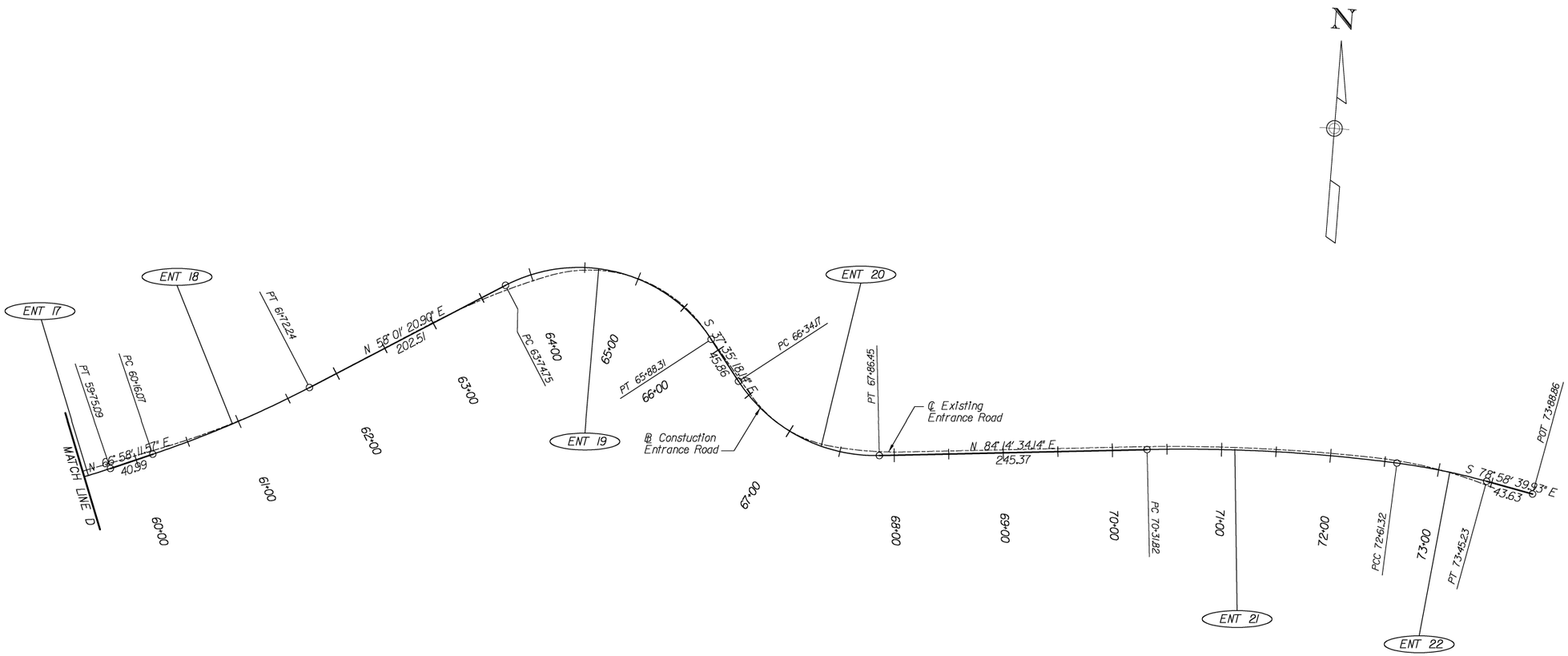

COORDINATE TABLE

DESIGNATION		STATION	NORTHING	EASTING
B/L ENTRANCE ROAD				
ENT 18	PC	60+16.073	484,131.512	1,245,414.860
	PI	60+94.313	484,162.121	1,245,486.864
	PT	61+72.235	484,203.556	1,245,553.231
ENT 19	PC	63+74.747	484,310.803	1,245,725.013
	PI	65+06.200	484,380.419	1,245,836.519
	PT	65+88.313	484,276.254	1,245,916.703
ENT 20	PC	66+34.168	484,239.917	1,245,944.674
	PI	67+17.604	484,173.802	1,245,995.569
	PT	67+86.454	484,182.171	1,246,078.583
ENT 21	PC	70+31.822	484,206.785	1,246,322.713
	PI	71+46.793	484,218.318	1,246,437.105
	PCC	72+61.317	484,212.283	1,246,551.919
ENT 22	PCC	72+61.317	484,212.283	1,246,551.919
	PI	73+03.343	484,210.077	1,246,593.887
	PT	73+45.232	484,202.042	1,246,635.138
	POT	73+88.861	484,193.701	1,246,677.962

U.S. DEPARTMENT OF TRANSPORTATION
FEDERAL HIGHWAY ADMINISTRATION
EASTERN FEDERAL LANDS HIGHWAY DIVISION
STERLING, VIRGINIA

CHESAPEAKE & OHIO CANAL
NATIONAL HISTORICAL PARK
GREAT FALLS ENTRANCE ROAD & PARKING LOTS

GEOMETRIC LAYOUT

0 60 120
SCALE IN FEET

SHEET 6 OF 6

NPS NO.	REG	STATE	PROJECT	SHEET NO.
412 / 41,911	NCR	MD	PRA-CHOH 102 (1)	31

POINT LOCATION TABLE			
Point	Northing	Easting	Elevation
1	487,787.575	1,242,752.676	177.8
2	487,810.409	1,242,836.583	181.5
3	487,795.935	1,242,840.522	181.7
4	487,785.768	1,242,803.160	179.8
5	487,777.598	1,242,800.756	179.6
6	487,707.656	1,242,863.706	183.25
7	487,697.621	1,242,852.557	183.4
8	487,731.364	1,242,822.188	182.2
9	487,730.284	1,242,818.718	182.2

Note: Point elevations are designated at the flow line.

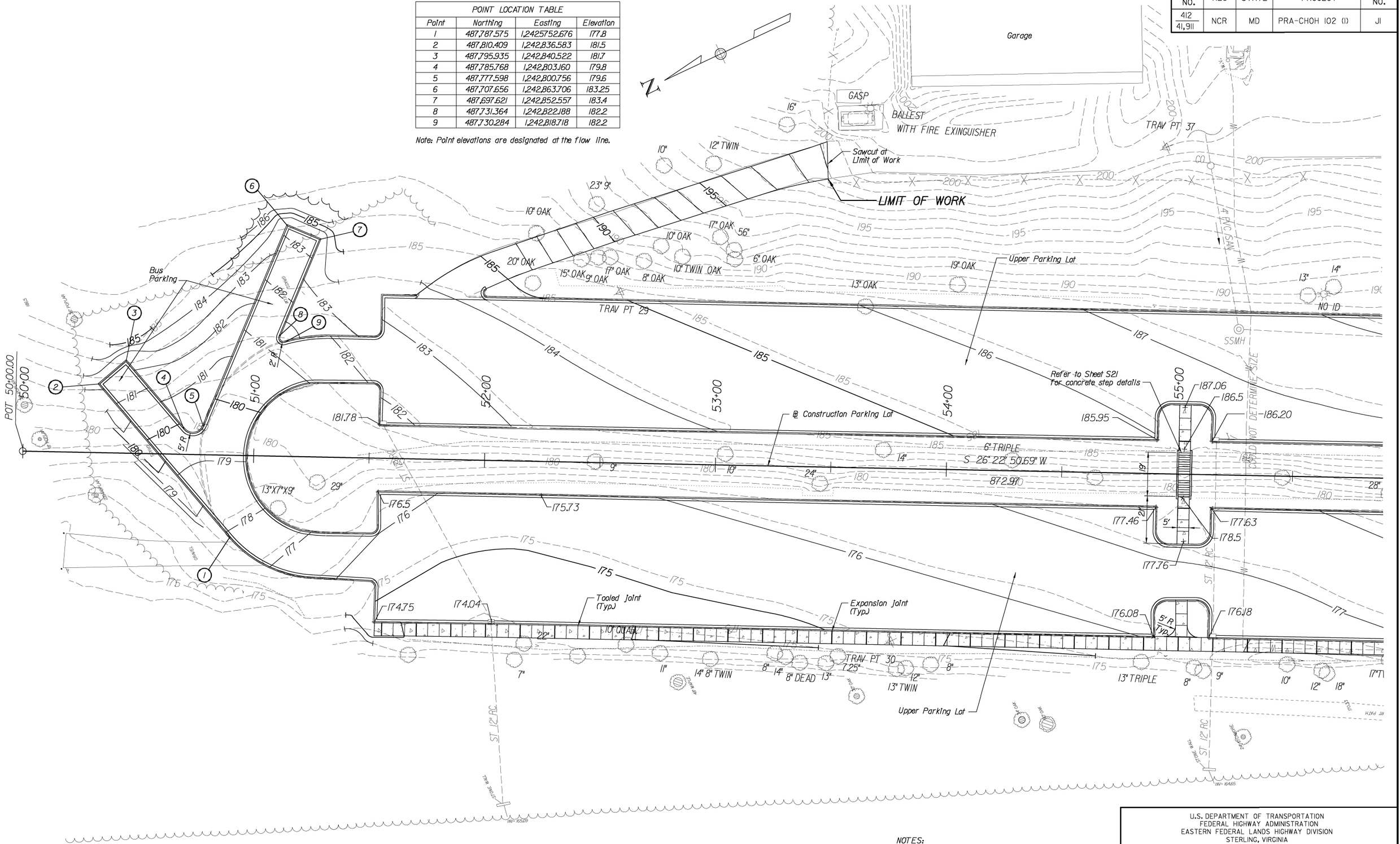

NOTES:

1. See Sheet M3 for Erosion and Sediment Control Plans.

U.S. DEPARTMENT OF TRANSPORTATION
FEDERAL HIGHWAY ADMINISTRATION
EASTERN FEDERAL LANDS HIGHWAY DIVISION
STERLING, VIRGINIA

CHESAPEAKE & OHIO CANAL
NATIONAL HISTORICAL PARK
GREAT FALLS ENTRANCE ROAD & PARKING LOTS

PART GRADING PLAN

0 20 40
SCALE IN FEET

SHEET 1 OF 3

NPS NO.	REG	STATE	PROJECT	SHEET NO.
412 / 41,911	NCR	MD	PRA-CHOH 102 (1)	J2

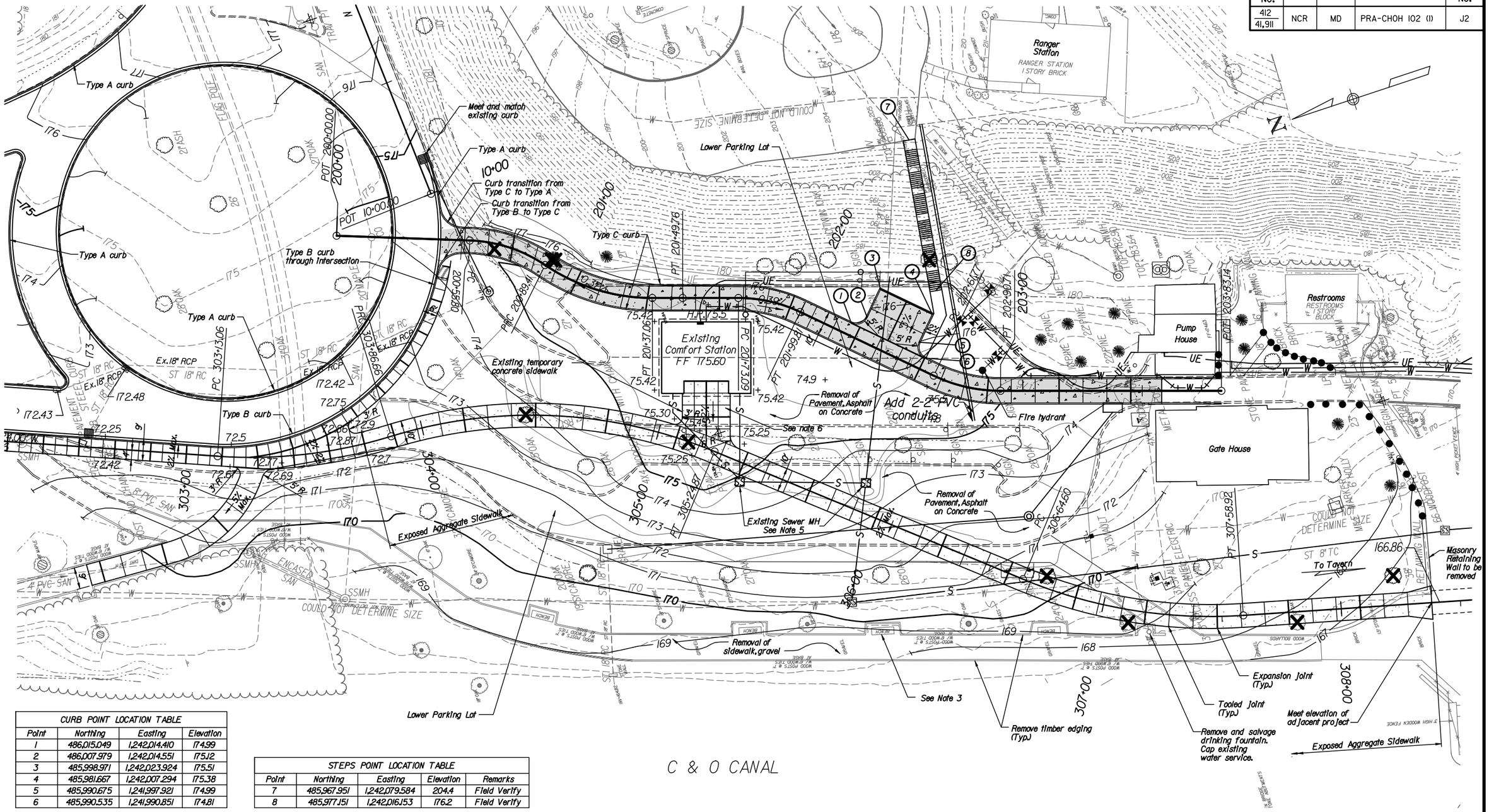

CURB POINT LOCATION TABLE			
Point	Northing	Easting	Elevation
1	486,015.049	1,242,014.410	174.99
2	486,007.979	1,242,014.551	175.12
3	485,998.971	1,242,023.924	175.51
4	485,981.667	1,242,007.294	175.38
5	485,990.675	1,241,997.921	174.99
6	485,990.535	1,241,990.851	174.81

Note: Point elevations are designated at the flowline.

STEPS POINT LOCATION TABLE				
Point	Northing	Easting	Elevation	Remarks
7	485,967.951	1,242,079.584	204.4	Field Verify
8	485,977.151	1,242,016.153	176.2	Field Verify

NOTES:

1. Unless existing tree is designated for removal on this Grading Plan, it shall remain. Tree Protection Fence (Std. Detail 619-A) shall be used as necessary for remaining trees.
2. Provide 4" topsoil and permanent seeding in areas of pavement removal (e.g., parking lot, sidewalk).
3. All existing benches along the Tow Path will be removed and salvaged by the contractor and will remain the property of the National Park Service. The CO will coordinate location of salvaged materials.
4. See Sheet M4 for Erosion and Sediment Control Plans.
5. Adjust Existing Sewer MH as required to match proposed finished grade
6. Remove temporary sidewalk at existing comfort station and reconstruct new access walk according to plan.

U.S. DEPARTMENT OF TRANSPORTATION
FEDERAL HIGHWAY ADMINISTRATION
EASTERN FEDERAL LANDS HIGHWAY DIVISION
STERLING, VIRGINIA

CHESAPEAKE & OHIO CANAL
NATIONAL HISTORICAL PARK
GREAT FALLS ENTRANCE ROAD & PARKING LOTS

PART GRADING PLAN

0 20 40
SCALE IN FEET

SHEET 2 OF 3

$USER$ $DATE$ 11:06:31 AM $FILE$

NPS NO.	REG	STATE	PROJECT	SHEET NO.
412 / 41,911	NCR	MD	PRA-CHOH 102 (1)	J3

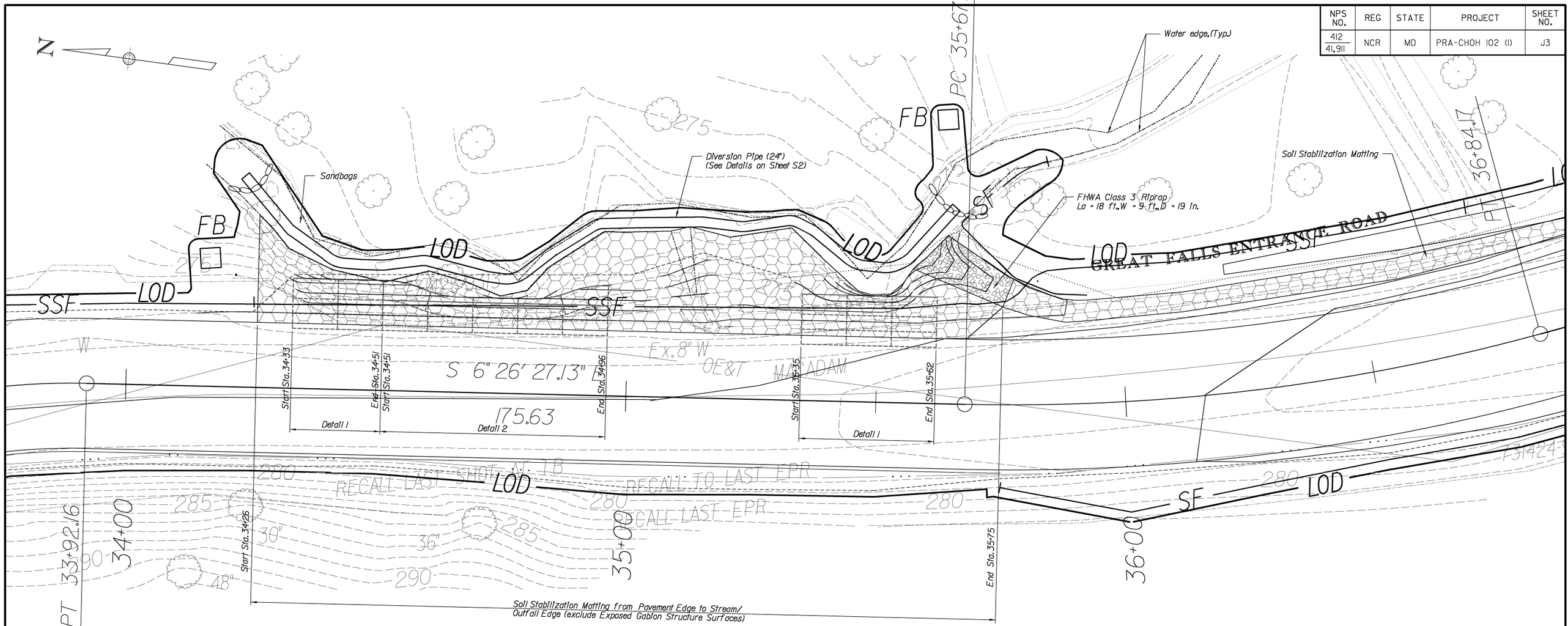

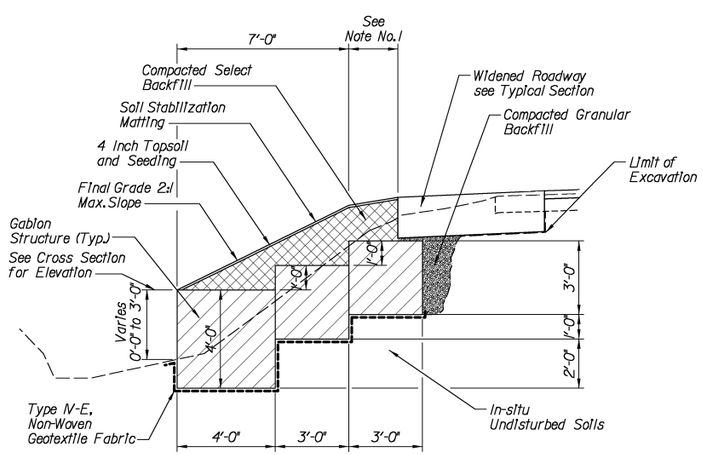

EMBANKMENT STABILIZATION DETAIL 1

Scale: Not to Scale
Limits: 34+33,LT to 34+51,LT
35+35,LT to 35+62,LT

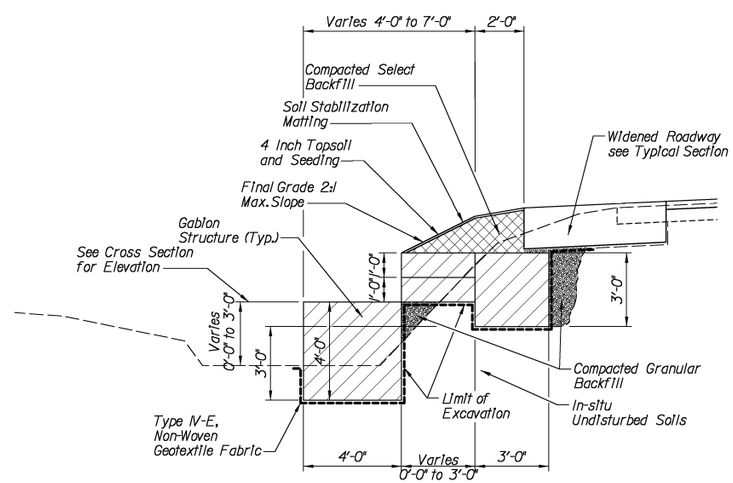

EMBANKMENT STABILIZATION DETAIL 2

Scale: Not to Scale
Limits: 34+51,LT to 34+96,LT

Note:
1. From 34+33,LT to 34+51,LT the Dimension is 2'-0". From 35+35,LT to 35+62,LT the Dimension is 1'-3".

2. See Step 23 of the Sequence of Construction on Sheet M1 for detailed construction sequencing.

U.S. DEPARTMENT OF TRANSPORTATION
FEDERAL HIGHWAY ADMINISTRATION
EASTERN FEDERAL LANDS HIGHWAY DIVISION
STERLING, VIRGINIA

CHESAPEAKE & OHIO CANAL
NATIONAL HISTORICAL PARK
GREAT FALLS ENTRANCE ROAD & PARKING LOTS

PART GRADING PLAN

0 10 20
SCALE IN FEET

SHEET 3 OF 3

NPS NO.	REG	STATE	PROJECT	SHEET NO.
412 41,911	NCR	MD	PRA-CHOH 102 (1)	K1

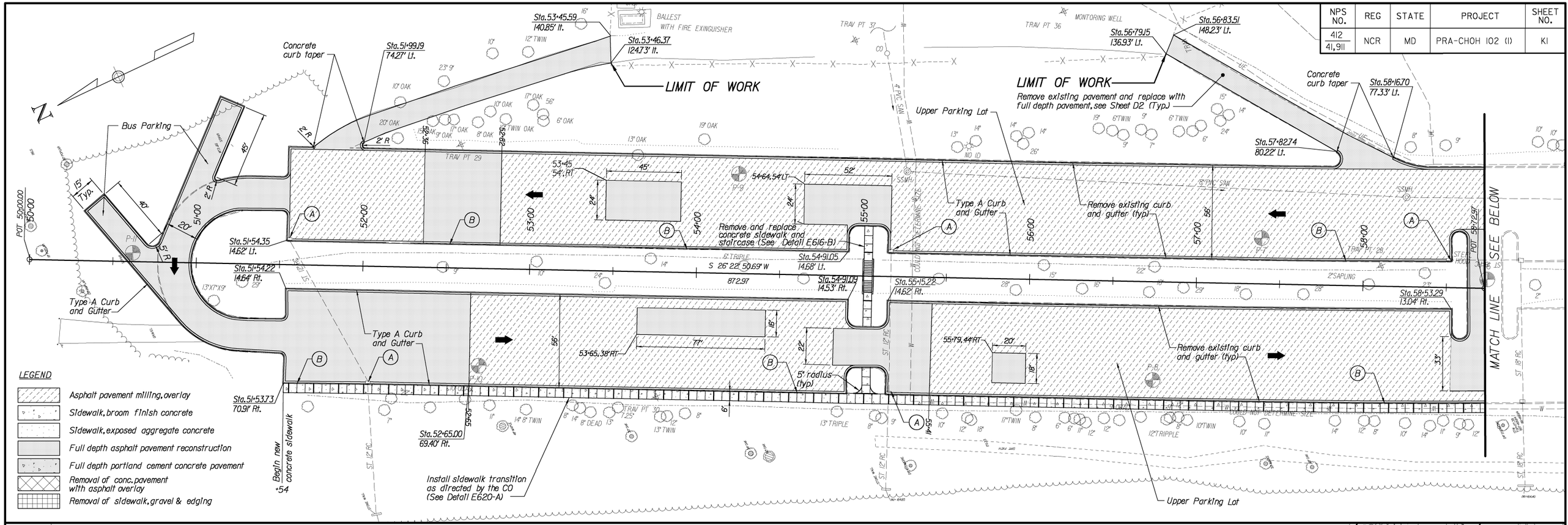

(A) Remove inlet frame and grate and install new inlet top, metal frame and grate, Type 6A.

(B) Install standard underdrain system, see Underdrain Schedule for limits and outlet locations.

(C) Install new inlet, Type 6A.

Note:

1. Unless otherwise noted, new curb radius will match existing curb radius. See curb and gutter schedule for station limits and type.
2. Full depth patching is not required in the area of recently installed 8-inch sanitary sewer.

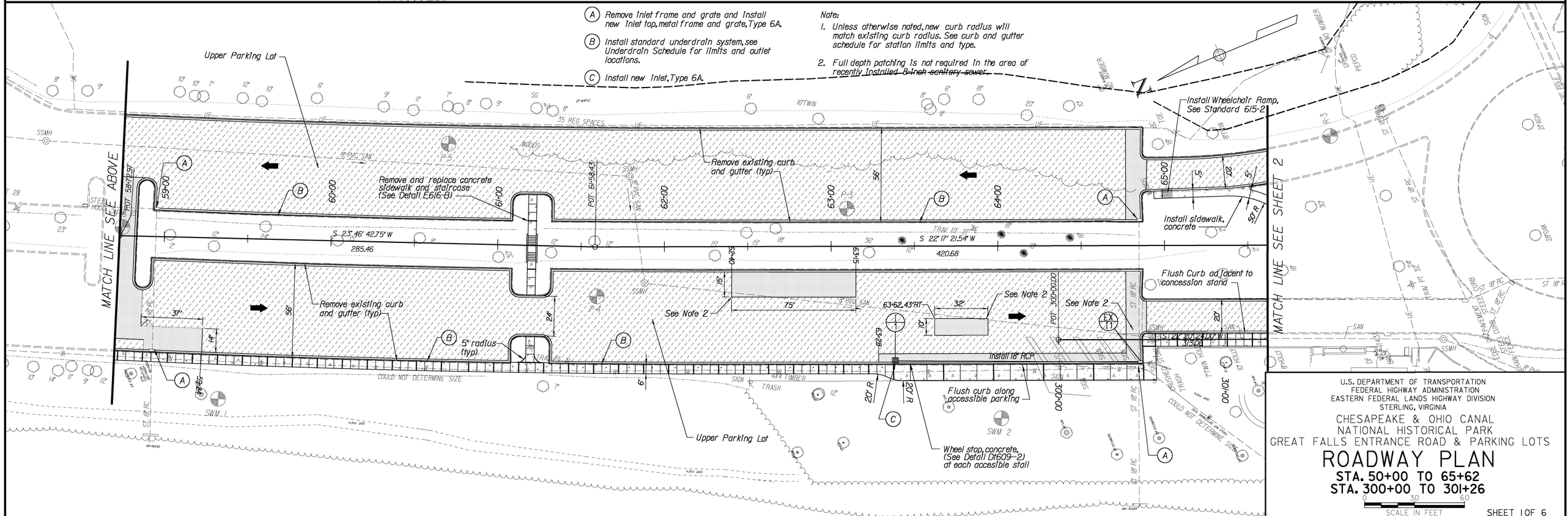

U.S. DEPARTMENT OF TRANSPORTATION
FEDERAL HIGHWAY ADMINISTRATION
EASTERN FEDERAL LANDS HIGHWAY DIVISION
STERLING, VIRGINIA

CHESAPEAKE & OHIO CANAL
NATIONAL HISTORICAL PARK
GREAT FALLS ENTRANCE ROAD & PARKING LOTS

ROADWAY PLAN

STA. 50+00 TO 65+62
STA. 300+00 TO 301+26

0 30 60
SCALE IN FEET

SHEET 1 OF 6

NPS NO.	REG	STATE	PROJECT	SHEET NO.
412 / 41,911	NCR	MD	PRA-CHOH 102 (1)	K2

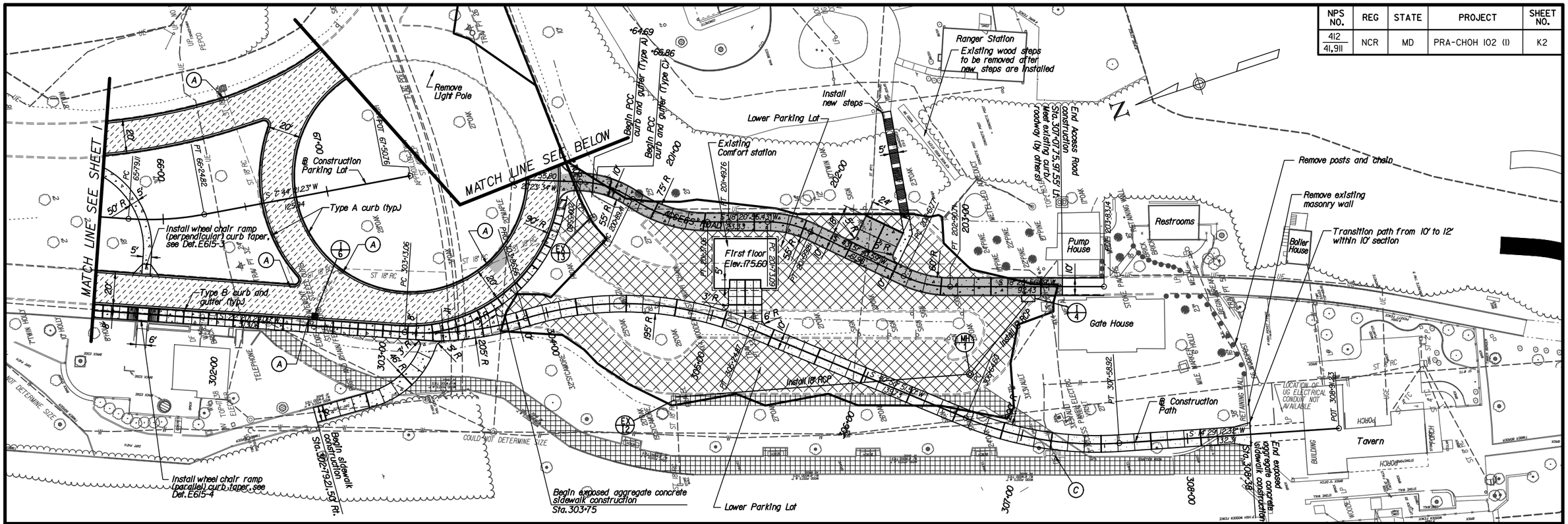

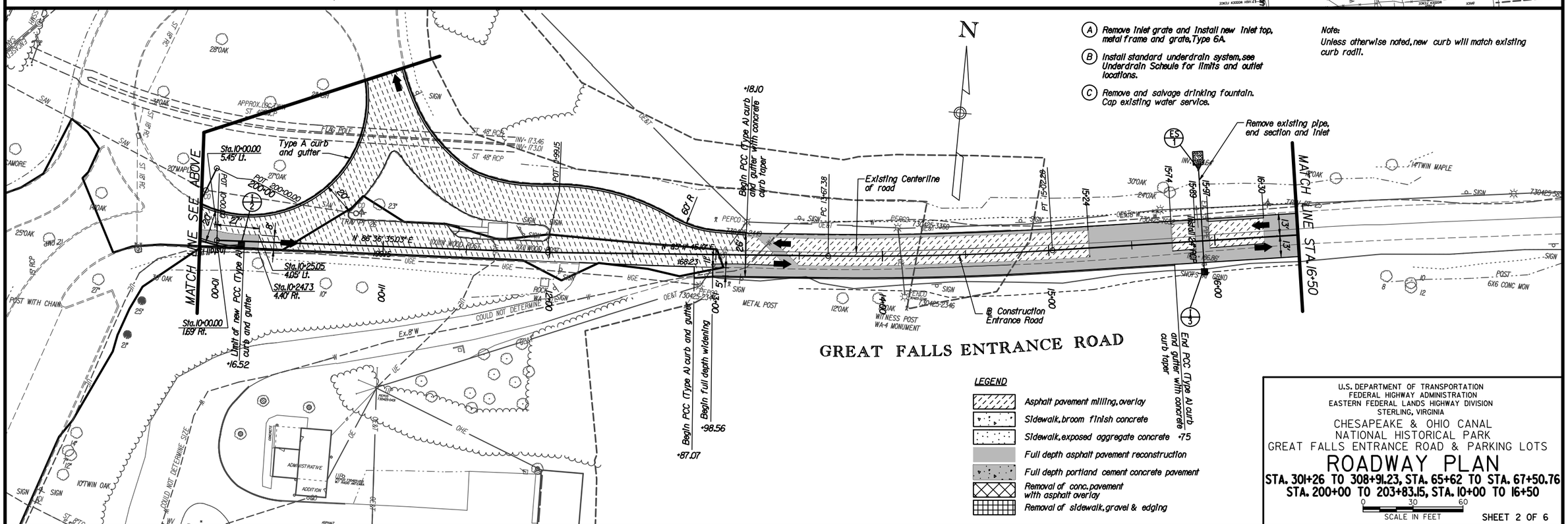

U.S. DEPARTMENT OF TRANSPORTATION
FEDERAL HIGHWAY ADMINISTRATION
EASTERN FEDERAL LANDS HIGHWAY DIVISION
STERLING, VIRGINIA

CHESAPEAKE & OHIO CANAL
NATIONAL HISTORICAL PARK
GREAT FALLS ENTRANCE ROAD & PARKING LOTS

ROADWAY PLAN

STA. 301+26 TO 308+91.23, STA. 65+62 TO STA. 67+50.76
STA. 200+00 TO 203+83.15, STA. 10+00 TO 16+50

0 30 60
SCALE IN FEET

SHEET 2 OF 6

$USER$ $DATE$ 11:36:25 AM $FILE$

NPS NO.	REG	STATE	PROJECT	SHEET NO.
412 / 41,911	NCR	MD	PRA-CHOH 102 (1)	K3

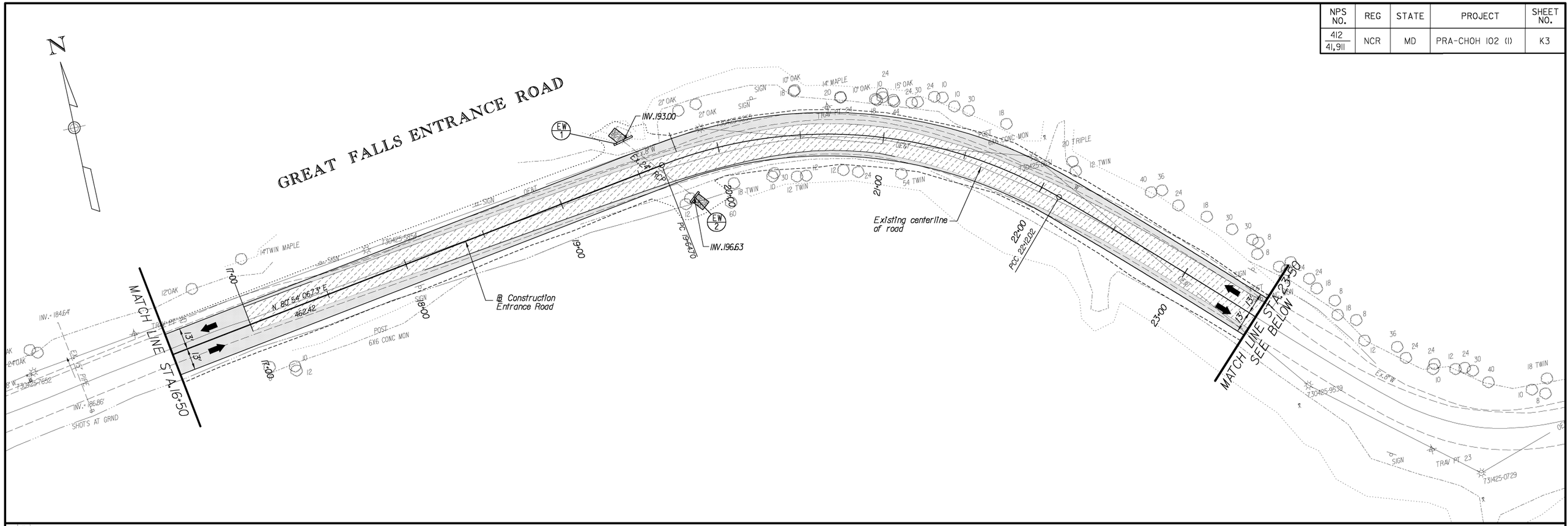

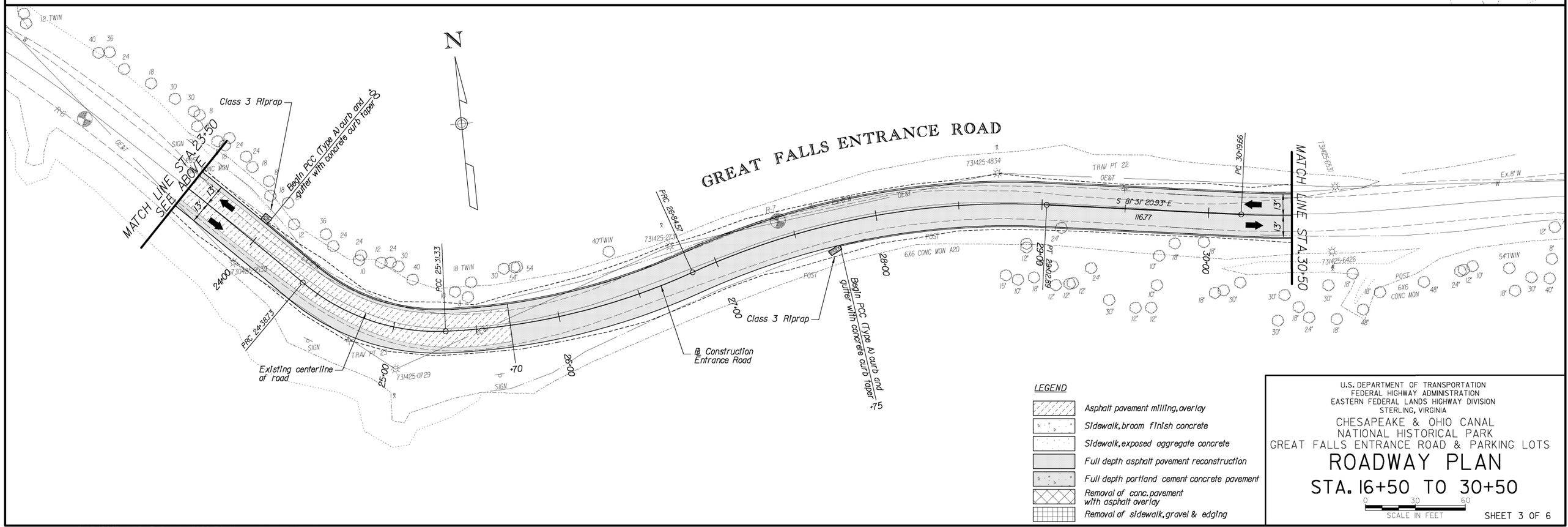

U.S. DEPARTMENT OF TRANSPORTATION
FEDERAL HIGHWAY ADMINISTRATION
EASTERN FEDERAL LANDS HIGHWAY DIVISION
STERLING, VIRGINIA

CHESAPEAKE & OHIO CANAL
NATIONAL HISTORICAL PARK
GREAT FALLS ENTRANCE ROAD & PARKING LOTS

ROADWAY PLAN

STA. 16+50 TO 30+50

0 30 60
SCALE IN FEET

SHEET 3 OF 6

NPS NO.	REG	STATE	PROJECT	SHEET NO.
412 / 41,911	NCR	MD	PRA-CHOH 102 (1)	K4

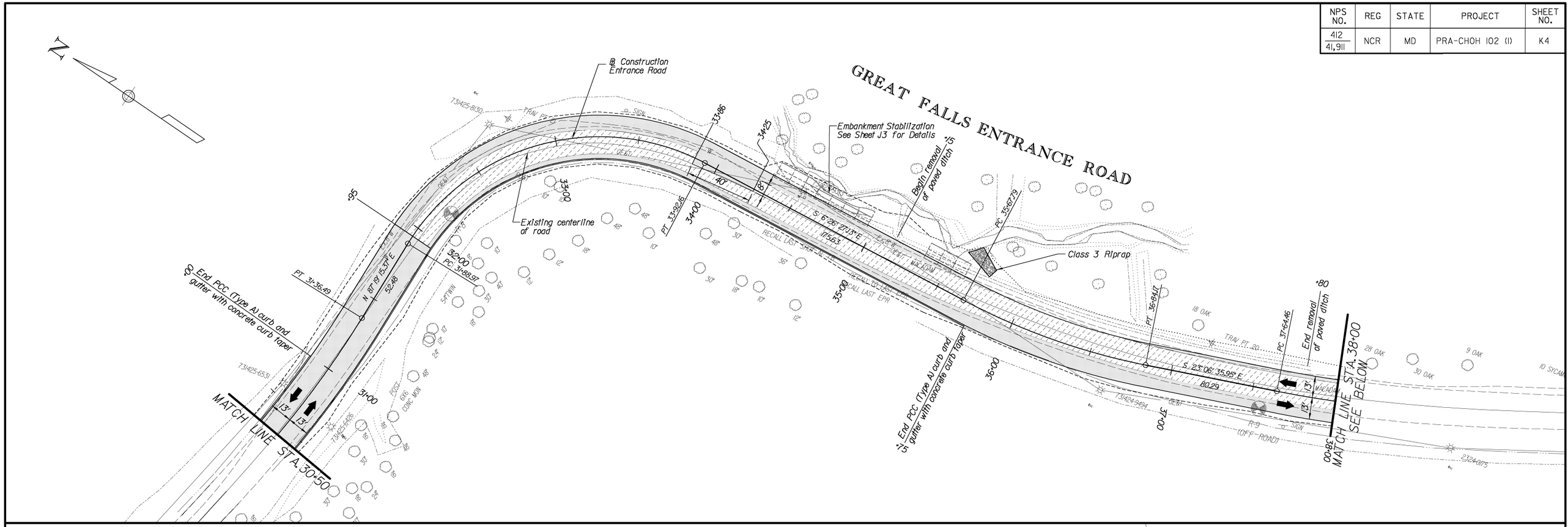

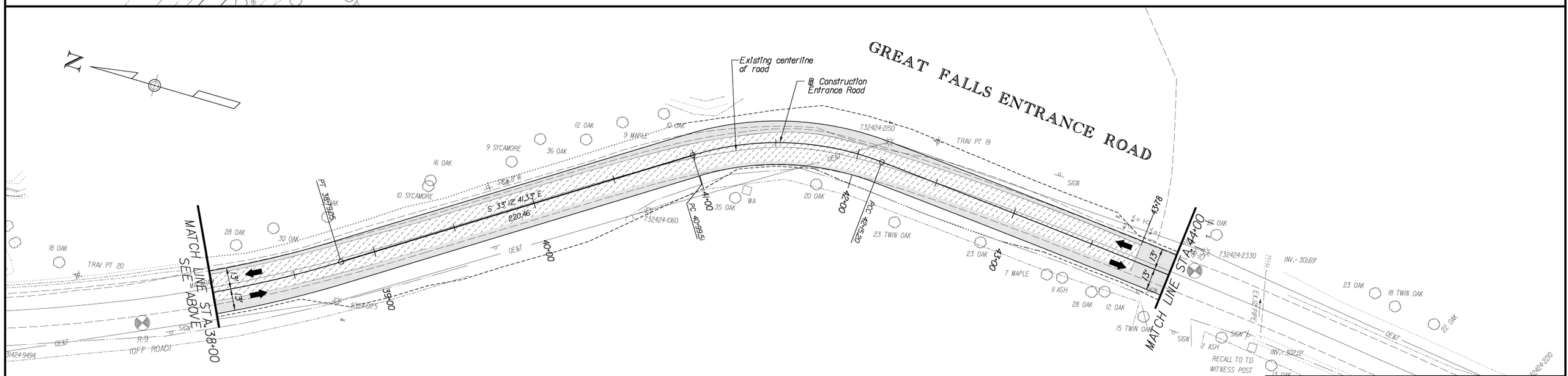

LEGEND

- Asphalt pavement milling, overlay
- Sidewalk, broom finish concrete
- Sidewalk, exposed aggregate concrete
- Full depth asphalt pavement reconstruction
- Full depth portland cement concrete pavement
- Removal of conc. pavement with asphalt overlay
- Removal of sidewalk, gravel & edging

U.S. DEPARTMENT OF TRANSPORTATION
FEDERAL HIGHWAY ADMINISTRATION
EASTERN FEDERAL LANDS HIGHWAY DIVISION
STERLING, VIRGINIA

CHESAPEAKE & OHIO CANAL
NATIONAL HISTORICAL PARK
GREAT FALLS ENTRANCE ROAD & PARKING LOTS

ROADWAY PLAN

STA. 30+50 TO 44+00

0 30 60
SCALE IN FEET

SHEET 4 OF 6

NPS NO.	REG	STATE	PROJECT	SHEET NO.
412 / 41,911	NCR	MD	PRA-CHOH 102 (1)	K5

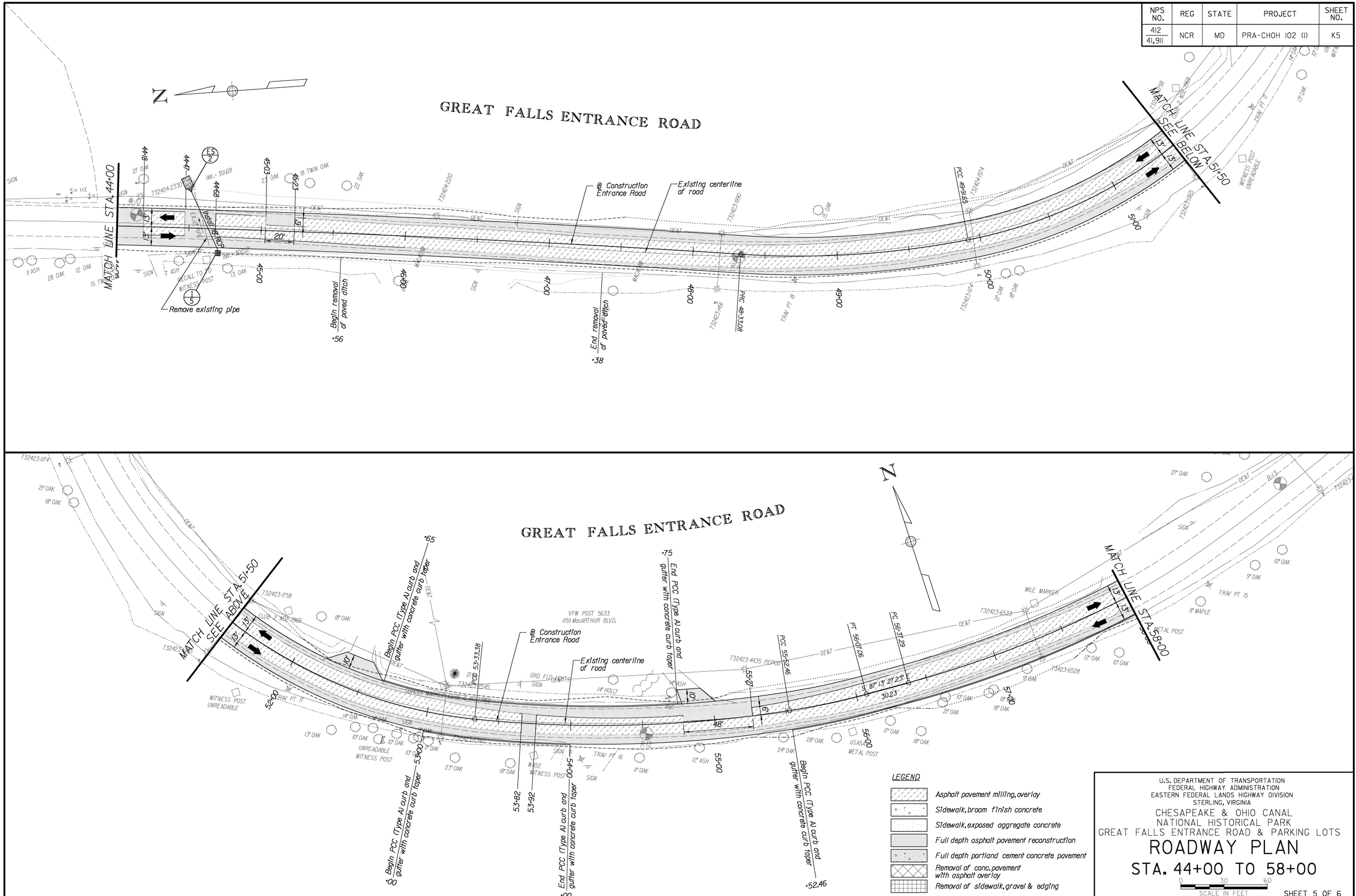

U.S. DEPARTMENT OF TRANSPORTATION
FEDERAL HIGHWAY ADMINISTRATION
EASTERN FEDERAL LANDS HIGHWAY DIVISION
STERLING, VIRGINIA

CHESAPEAKE & OHIO CANAL
NATIONAL HISTORICAL PARK
GREAT FALLS ENTRANCE ROAD & PARKING LOTS

ROADWAY PLAN

STA. 44+00 TO 58+00

0 30 60
SCALE IN FEET

SHEET 5 OF 6

NPS NO.	REG	STATE	PROJECT	SHEET NO.
412 / 41,911	NCR	MD	PRA-CHOH 102 (1)	K6

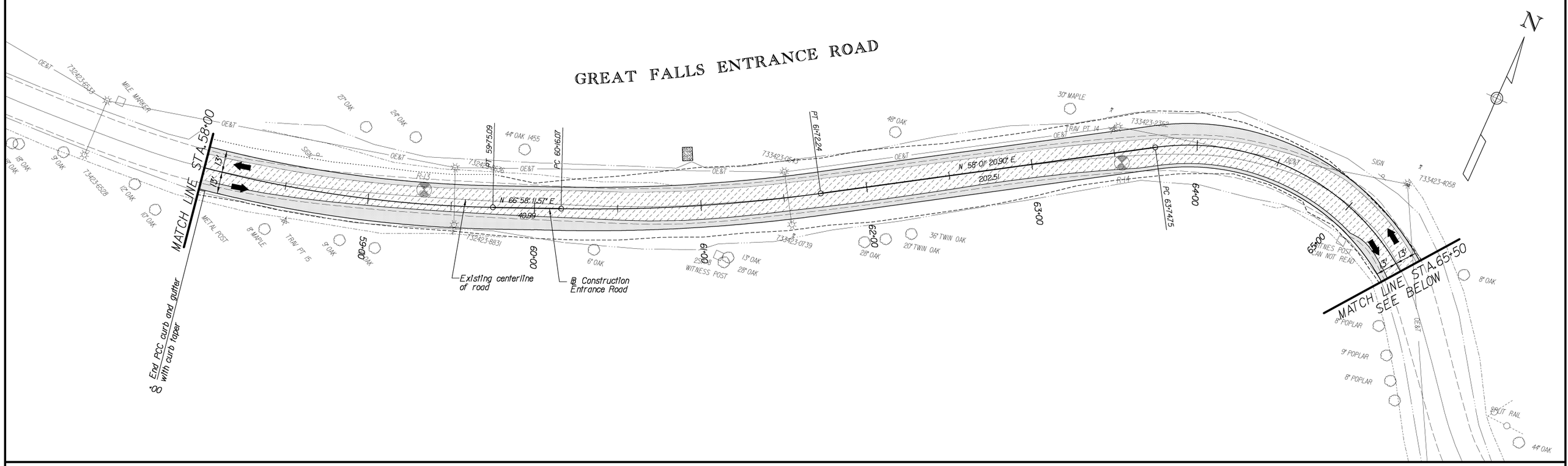

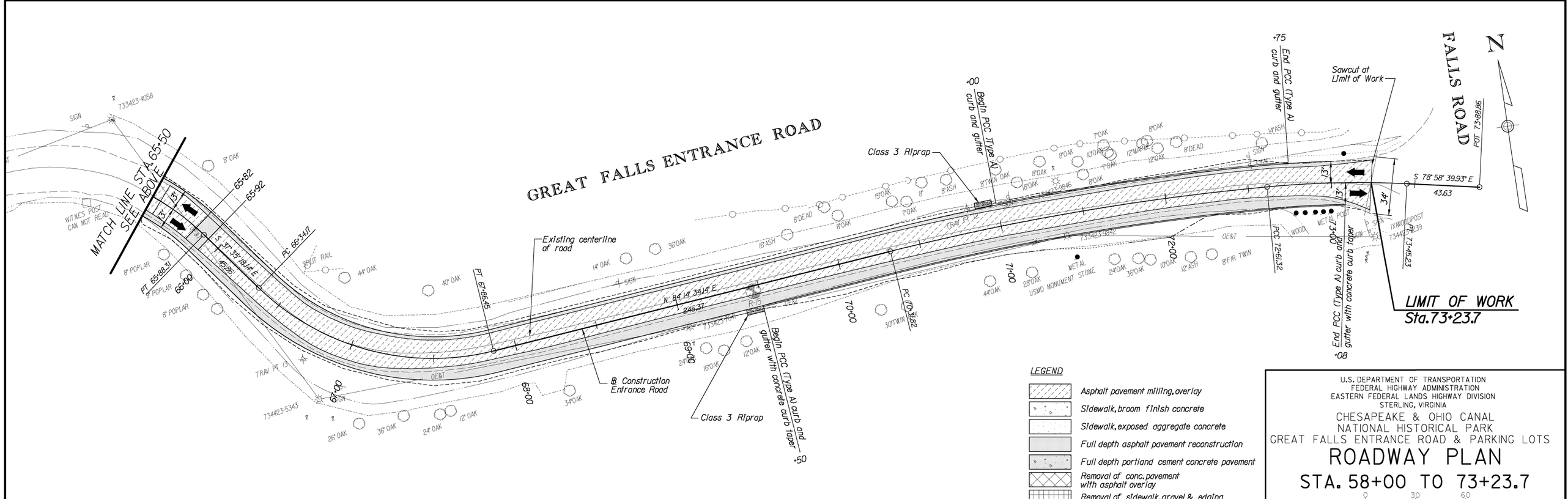

LEGEND

- Asphalt pavement milling, overlay
- Sidewalk, broom finish concrete
- Sidewalk, exposed aggregate concrete
- Full depth asphalt pavement reconstruction
- Full depth portland cement concrete pavement
- Removal of conc. pavement with asphalt overlay
- Removal of sidewalk, gravel & edging

U.S. DEPARTMENT OF TRANSPORTATION
FEDERAL HIGHWAY ADMINISTRATION
EASTERN FEDERAL LANDS HIGHWAY DIVISION
STERLING, VIRGINIA

CHESAPEAKE & OHIO CANAL
NATIONAL HISTORICAL PARK
GREAT FALLS ENTRANCE ROAD & PARKING LOTS

ROADWAY PLAN

STA. 58+00 TO 73+23.7

0 30 60
SCALE IN FEET

SHEET 6 OF 6

NPS NO.	REG	STATE	PROJECT	SHEET NO.
412 / 41,911	NCR	MD	PRA-CHOH 102 (1)	L1

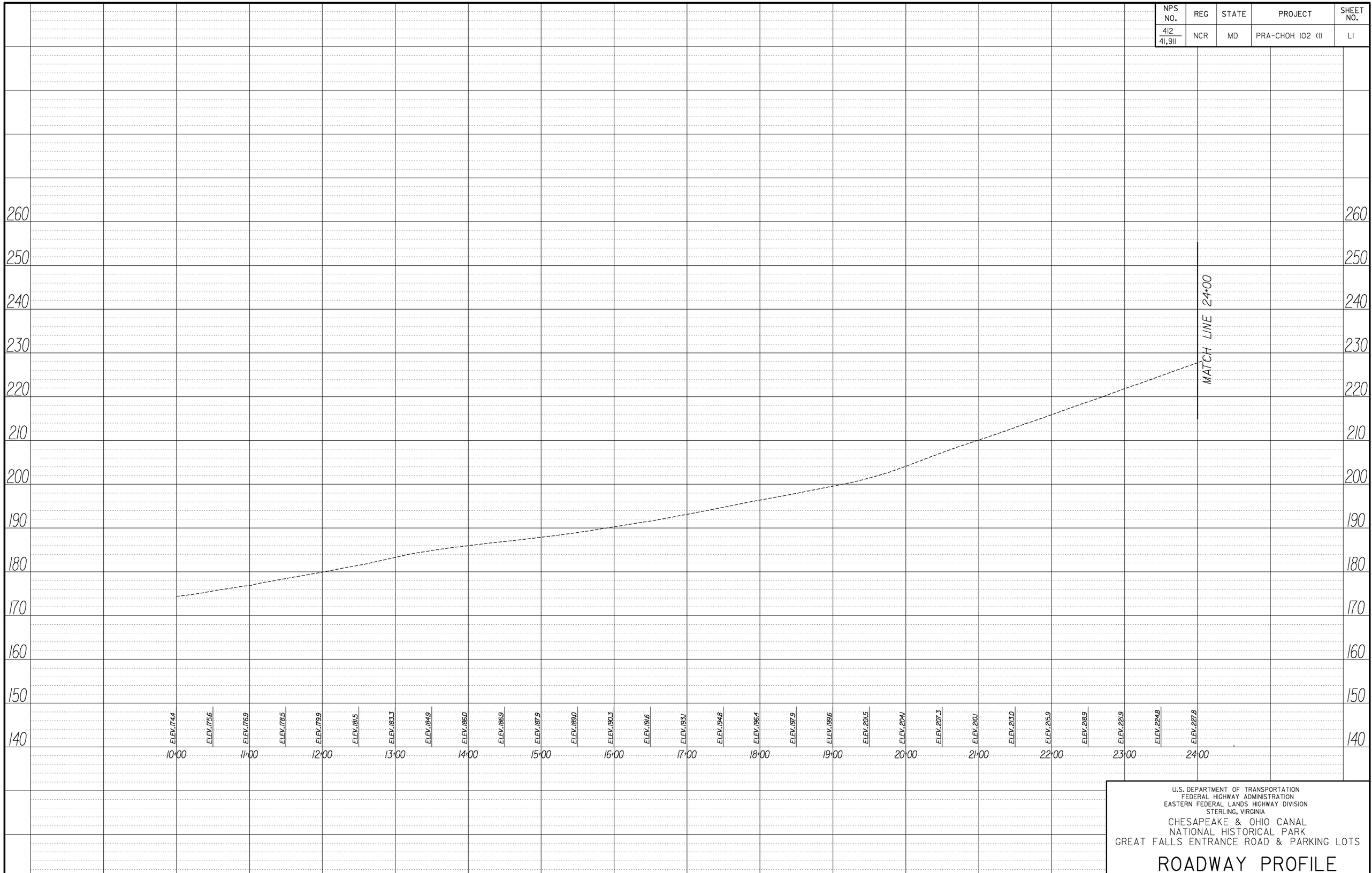

U.S. DEPARTMENT OF TRANSPORTATION
FEDERAL HIGHWAY ADMINISTRATION
EASTERN FEDERAL LANDS HIGHWAY DIVISION
STERLING, VIRGINIA

CHESAPEAKE & OHIO CANAL
NATIONAL HISTORICAL PARK
GREAT FALLS ENTRANCE ROAD & PARKING LOTS

ROADWAY PROFILE
Sta. 10+00 to 24+00

SHEET 1 OF 5

NPS NO.	REG	STATE	PROJECT	SHEET NO.
412 / 41,911	NCR	MD	PRA-CHOH 102 (1)	L2

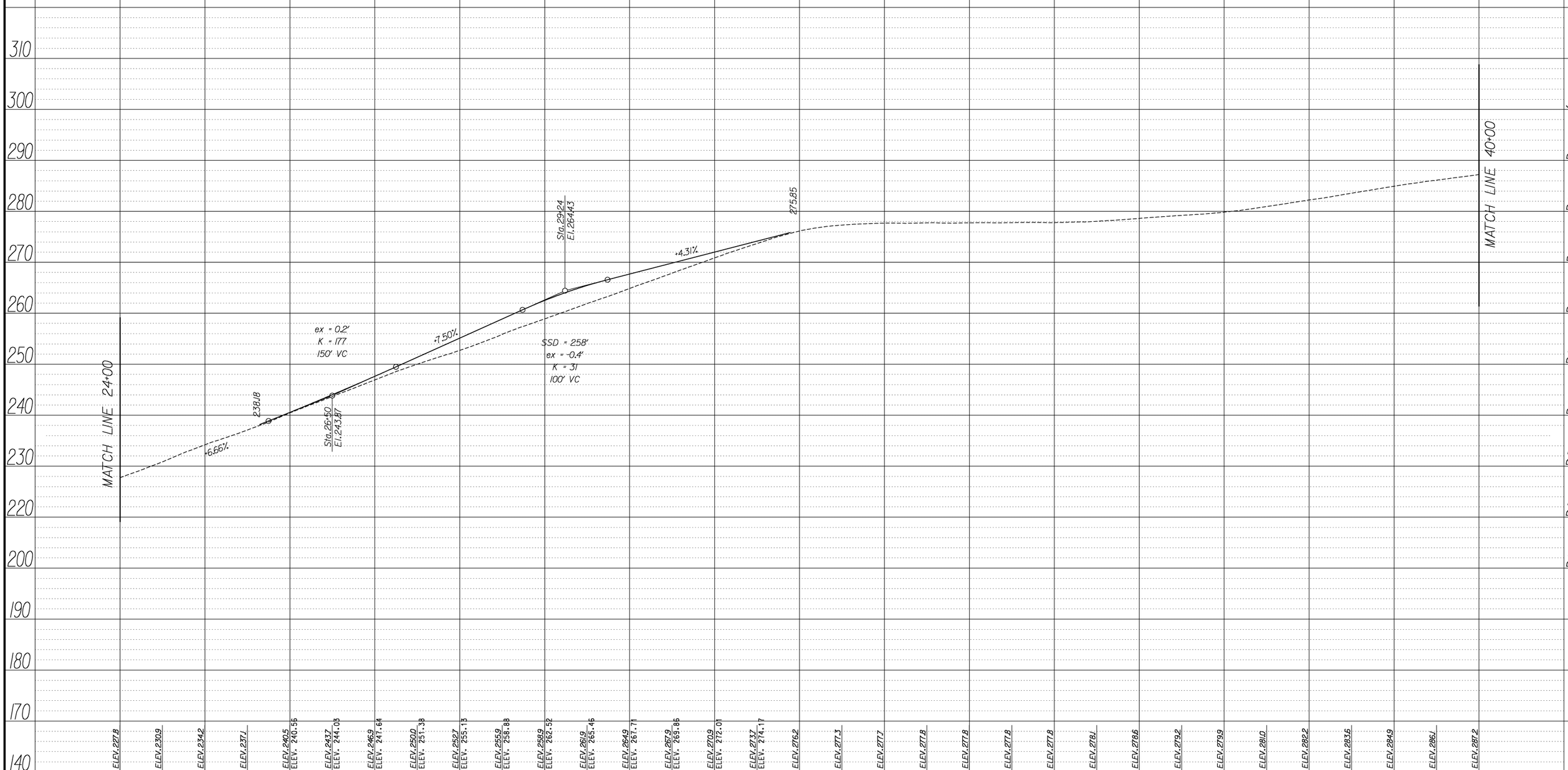

0 60 120
HORIZONTAL SCALE IN FEET

0 10 20
VERTICAL SCALE IN FEET

U.S. DEPARTMENT OF TRANSPORTATION
FEDERAL HIGHWAY ADMINISTRATION
EASTERN FEDERAL LANDS HIGHWAY DIVISION
STERLING, VIRGINIA

CHESAPEAKE & OHIO CANAL
NATIONAL HISTORICAL PARK
GREAT FALLS ENTRANCE ROAD & PARKING LOTS

ROADWAY PROFILE
Sta. 24+00 to 40+00

SHEET 2 OF 5

NPS NO.	REG	STATE	PROJECT	SHEET NO.
412 / 41,911	NCR	MD	PRA-CHOH 102 (1)	L3

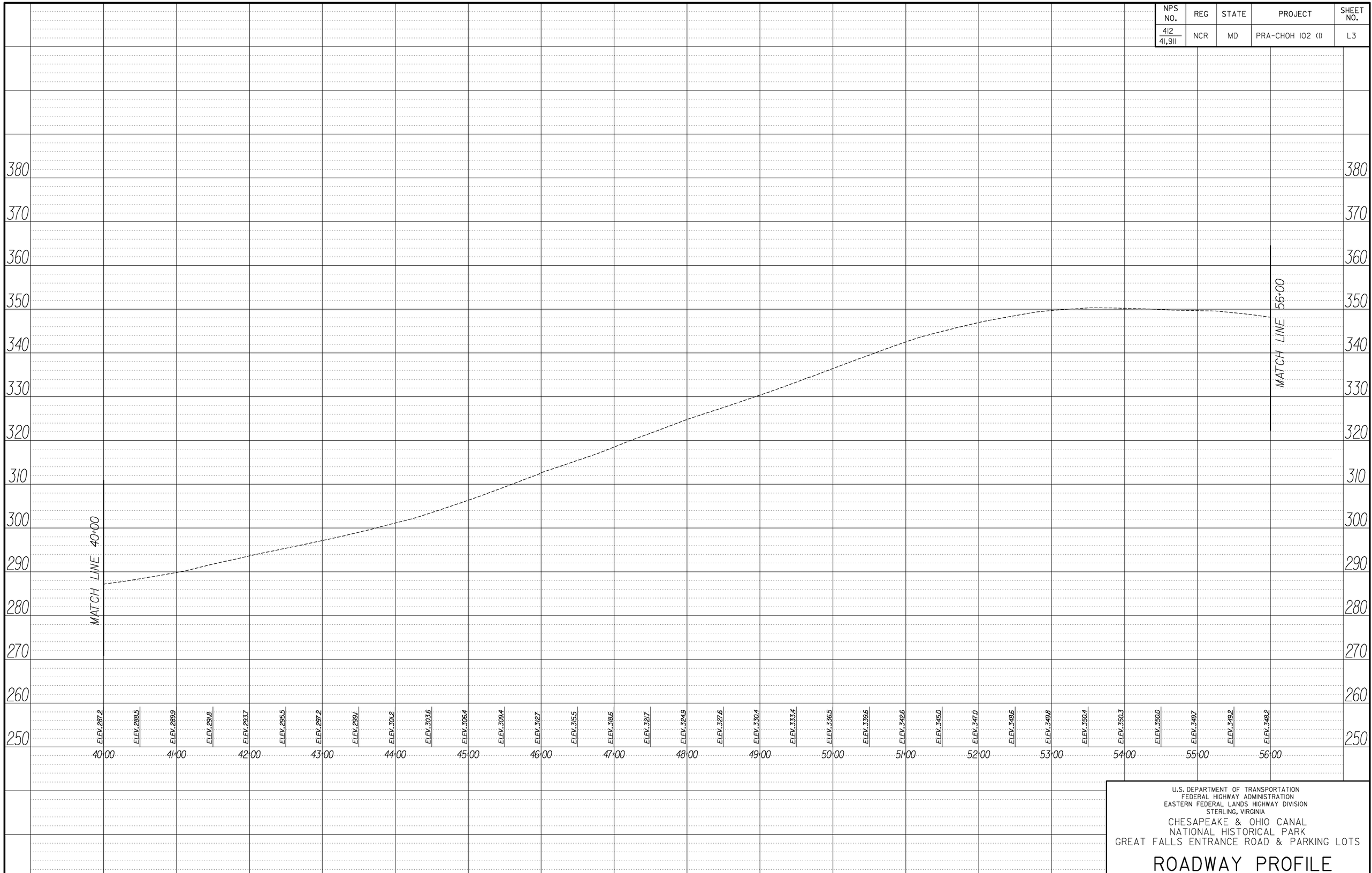

U.S. DEPARTMENT OF TRANSPORTATION
FEDERAL HIGHWAY ADMINISTRATION
EASTERN FEDERAL LANDS HIGHWAY DIVISION
STERLING, VIRGINIA

CHESAPEAKE & OHIO CANAL
NATIONAL HISTORICAL PARK
GREAT FALLS ENTRANCE ROAD & PARKING LOTS

ROADWAY PROFILE
Sta. 40+00 to 56+00

SHEET 3 OF 5

NPS NO.	REG	STATE	PROJECT	SHEET NO.
412 / 41,911	NCR	MD	PRA-CHOH 102 (1)	L4

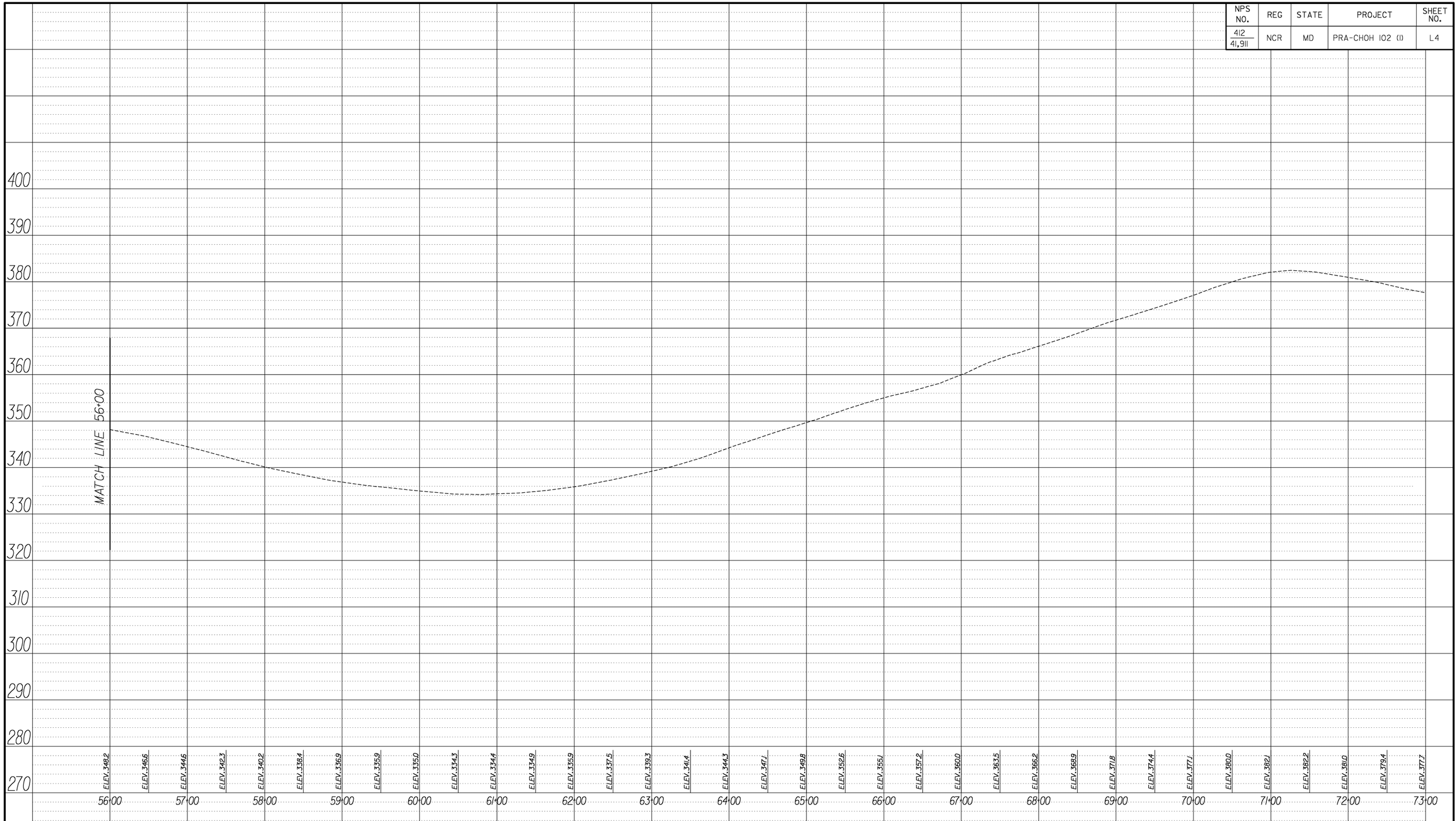

0 60 120
HORIZONTAL SCALE IN FEET

0 10 20
VERTICAL SCALE IN FEET

U.S. DEPARTMENT OF TRANSPORTATION
FEDERAL HIGHWAY ADMINISTRATION
EASTERN FEDERAL LANDS HIGHWAY DIVISION
STERLING, VIRGINIA

CHESAPEAKE & OHIO CANAL
NATIONAL HISTORICAL PARK
GREAT FALLS ENTRANCE ROAD & PARKING LOTS

ROADWAY PROFILE
Sta. 56+00 to 73+00

SHEET 4 OF 5

NPS NO.	REG	STATE	PROJECT	SHEET NO.
412 / 41,911	NCR	MD	PRA-CHOH 102 (1)	L5

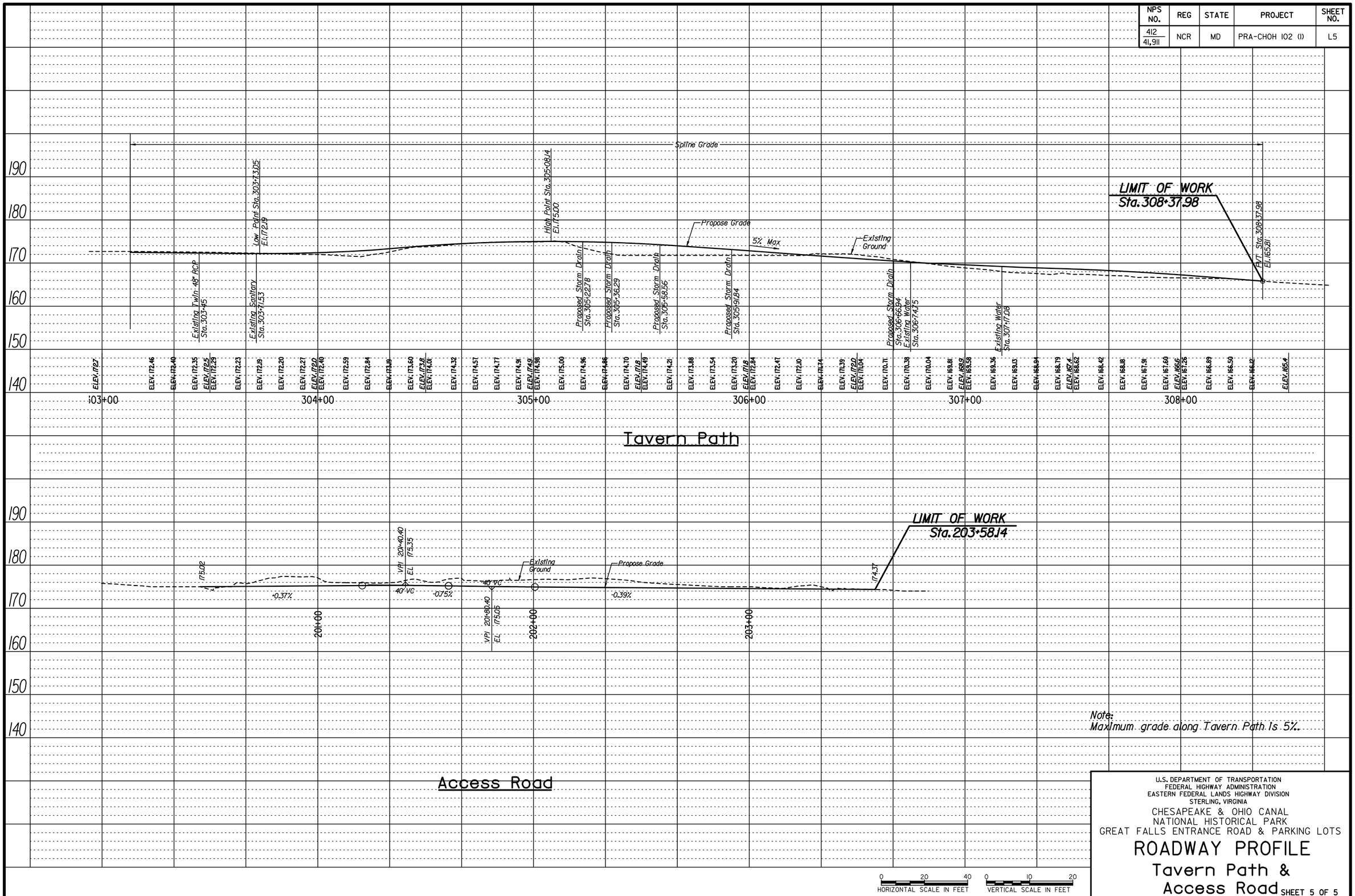

U.S. DEPARTMENT OF TRANSPORTATION
FEDERAL HIGHWAY ADMINISTRATION
EASTERN FEDERAL LANDS HIGHWAY DIVISION
STERLING, VIRGINIA

CHESAPEAKE & OHIO CANAL
NATIONAL HISTORICAL PARK
GREAT FALLS ENTRANCE ROAD & PARKING LOTS

ROADWAY PROFILE
Tavern Path & Access Road

SHEET 5 OF 5

$DATE$ 10:22:24 AM $FILE$

NPS NO.	REG	STATE	PROJECT	SHEET NO.
412 / 41,911	NCR	MD	PRA-CHOH 102 (1)	M1

STANDARD EROSION AND SEDIMENT CONTROL NOTES

The Water Management Administration requires that these notes, in their entirety, be included on the erosion and sediment control plan. It is recognized that every note may not apply to all projects. The requirement of any individual note not applicable to the subject project is not binding upon the applicant or the applicant's contractor.

1. The contractor shall notify the Administration (WMA) at (410) 537-3510 seven (7) days before commencing any land disturbing activity and, unless waived by the Administration, shall be required to hold a pre-construction meeting between project representatives and a representative of WMA.
2. The contractor must notify WMA in writing and by telephone at the following points:
   - A. The required pre-construction meeting.
   - B. Following installation of sediment control measures.
   - C. During the installation of sediment basins (to be converted into permanent stormwater management structures) at the required inspection points (see Inspection Checklist on plan). Notification prior to commencing construction of each step is mandatory.
   - D. Prior to removal or modification of any sediment control structure(s).
   - E. Prior to removal of all sediment control devices.
   - F. Prior to final acceptance.
3. The contractor shall construct all erosion and sediment control measures per the approved plan and construction sequence and shall have them inspected and approved by the agency inspector or WMA inspector prior to beginning any other land disturbances. Minor sediment control device location adjustments may be made in the field with the approval of the WMA inspector. The contractor shall ensure that all runoff from disturbed areas is directed to the sediment control devices and shall not remove any erosion or sediment control measure without prior permission from WMA inspector and agency inspector. The contractor must obtain prior agency and WMA approval for changes to the Sediment Control Plan and/or Sequence of Construction.
4. The contractor shall protect all points of construction ingress and egress to prevent the deposition of materials onto public roads. All materials deposited onto public roads shall be removed immediately.
5. The contractor shall inspect daily and maintain continuously in an effective operating condition all erosion and sediment control measures until such times as they are removed with prior permission from WMA inspector and agency inspector.
6. All sediment basins, trap embankments and slopes, perimeter dikes, swales and all disturbed slopes steeper or equal to 3:1 shall be stabilized with sod or seed and anchored straw mulch, or other approved stabilization measures, as soon as possible but no later than seven (7) calendar days after establishment. All areas disturbed outside of the perimeter sediment control system must be minimized. Maintenance must be performed as necessary to ensure continued stabilization. (Requirement for stabilization may be reduced to three (3) days for sensitive areas.)
7. The contractor shall apply sod or seed and anchored straw mulch, or other approved stabilization measures to all disturbed areas and stockpiles within fourteen (14) calendar days after stripping and grading activities have ceased in the area. Maintenance shall be performed as necessary to ensure continued stabilization. (Requirement may be reduced to seven (7) days for sensitive areas.)
8. Prior to removal of sediment control measures, the contractor shall stabilize and have established permanent stabilization for all contributory disturbed areas using sod or an approved permanent seed mixture with required soil amendments and an approved anchored mulch. Wood fiber mulch may only be used in seeding season where the slope does not exceed 10% and grading has been done to promote sheet flow drainage. Areas brought to finished grade during the seeding season shall be permanently stabilized as soon as possible, but not later than fourteen (14) calendar days after establishment. When property is brought to finished grade during the months of November through February, and permanent stabilization is found to be impractical, temporary seed and anchored straw mulch shall be applied to disturbed areas. The final permanent stabilization of such property shall be applied by March 15 or earlier if ground and weather conditions allow.
9. The site's approval letter, approved Erosion and Sediment Control Plans, daily log books, and test reports shall be available at the site for inspection by duly authorized officials of WMA and the agency responsible for project.
10. Surface drainage flows over unstabilized cut and fill slopes shall be controlled by either preventing drainage flows from traversing the slopes or by installing protective devices to lower the water downslope without causing erosion. Dikes shall be installed and maintained at the top of a cut or fill slope until the slope and drainage area to it are fully stabilized, at which time they must be removed and final grading done to promote sheet flow drainage. Protective methods must be provided at points of concentrated flow where erosion is likely to occur.
11. Permanent swales or other points of concentrated water flow shall be stabilized with sod or seed with an approved erosion control matting, rip-rap, or by other approved stabilization measures.
12. Temporary sediment control devices may be removed, with permission of WMA inspector and agency inspectors, within thirty (30) calendar days following establishment of permanent stabilization in all contributory drainage areas. Stormwater management structures used temporarily for sediment control shall be converted to the permanent configuration within this time period as well.
13. No permanent cut or fill slope with a gradient steeper than 3:1 will be permitted in lawn maintenance areas. A slope gradient of up to 2:1 will be permitted in non-maintenance areas provided that those areas are indicated on the erosion and sediment control plan with a low-maintenance ground cover specified for permanent stabilization. Slope gradient steeper than 2:1 will not be permitted with vegetative stabilization.
14. For finished grading, the contractor shall provide adequate gradients to prevent water from ponding for more than twenty four (24) hours after the end of a rainfall event. Drainage courses and swale flow areas may take as long as forty-eight (48) hours after the end of a rainfall event to drain. Areas designed to have standing water shall not be required to meet this requirement.
15. Sediment traps or basins are not permitted within 20 feet of a foundation that exists or is under construction. No structure may be constructed within 20 feet of an active sediment trap or basin.
16. The WMA inspector has the option of requiring additional safety or sediment control measures, if deemed necessary.
17. All trap depth dimensions are relative to the outlet elevation. All traps must have a stable outfall. All traps and basins shall have stable inflow points.
18. Vegetative stabilization shall be performed in accordance with the Standards and Specifications for Soil Erosion and Sediment Control. Refer to appropriate specifications for temporary seeding, permanent seeding, mulching, sodding, and ground covers.
19. Sediment shall be removed and the trap or basin restored to its original dimensions when the sediment has accumulated to one quarter of the total depth of the trap or basin. Total depth shall be measured from the trap or basin bottom to the crest of the outlet.
20. Sediment removed from traps (and basins) shall be placed and stabilized in approved areas but not within a floodplain, wetland or tree-save area. When pumping sediment laden water, the discharge must be directed to a sediment trapping device prior to release from the site. A sump pit may be used if sediment traps themselves are being pumped out.
21. All water removed from excavated areas (e.g. utility trenches) shall be passed through an approved dewatering practice or pumped to a sediment trap or basin prior to discharge from the site (i.e. via functional storm drain system or to stable ground surface).
22. Sediment control for utility construction for areas outside of designed controls or as directed by engineer or WMA inspector:
    - A. Call "Miss Utility" at 1-800-257-7777 48 hours prior to the start of work.
    - B. Excavated trench material shall be placed on the high side of the trench.
    - C. Trenches for utility installation shall be backfilled, compacted, and stabilized at the end of each working day. No more trench shall be opened than can be completed the same day, unless:
    - D. Temporary silt fence shall be placed immediately downstream of any disturbed area intended to remain disturbed for more than one day.
23. Where deemed appropriate by the engineer or inspector, sediment basins and traps may need to be surrounded with an approved safety fence. The fence must conform to local ordinances and regulations. The developer or owner shall check with local building officials on applicable safety requirements. Where safety fence is deemed appropriate and local ordinances do not specify fencing sizes and types, the following shall be used as a minimum standard: The safety fence must be made of welded wire and at least 4 inches high, have posts spaced no farther apart than 8 feet, have mesh openings no greater than 2 inches in width and 4 inches in height with a minimum of 14 gauge wire. Safety fence must be maintained and in good condition at all times.
24. Off-site spoil or borrow areas on State or federal property must have prior approval by WMA and other applicable State, federal, and local agencies; otherwise approval must be granted by the local authorities. All waste and borrow areas off-site must be protected by sediment control measures and stabilized.
25. Sites where infiltration devices are used for the control of stormwater, extreme care must be taken to prevent runoff from unstabilized areas from entering the structure during construction. Sediment control devices placed in infiltration areas must have bottom elevations at least two (2) feet higher than the finish grade bottom elevation of the infiltration practice. When converting a sediment trap to an infiltration device, all accumulated sediment must be removed and disposed of prior to final grading of infiltration device.
26. When a storm drain system outfall is directed to a sediment trap or sediment basin and the system is to be used for temporarily conveying sediment laden water, all storm drain inlets in non-sump areas shall have temporary asphalt berms constructed at the time of base paving to direct gutter flow into the inlets to avoid surcharging and overflow of inlets in sump areas.
27. Site information:
    - A. Total Area of Facility (base, campus, park, etc.) 20,240 Acres
    - B. Total Area of Project Site 800 Acres
    - C. Area Disturbed 12.7 Acres
    - D. Area to be Roofed or Paved 0.9 Acres
    - E. Total Cut 3,465 Cubic Yards
    - F. Total Fill 1,270 Cubic Yards
    - G. Off-Site Waste / Borrow Area Location to be determined by the Contractor and approved by MDE.

DESIGN CERTIFICATION

"I hereby certify that this plan has been designed in accordance with the 1994 Standards and Specifications for Soil Erosion and Sediment Control, the 2000 Maryland Stormwater Design Manual, Volumes I & II and Maryland Department of the Environment erosion and sediment control and stormwater management regulations.

Date _____ Designer's Signature _____

MD. Registration No. MD 16156
(P.E.) R.L.S., R.L.A. or R.A. (Circle)

David T. Morleoni
Printed Name

OWNER'S /DEVELOPER'S CERTIFICATION:

I/We hereby certify that all clearing, grading, construction and/or development will be done pursuant to this plan and that any responsible personnel involved in the construction project will have a certificate of attendance at a Maryland Department of the Environment approved training program for the control of erosion and sediment before beginning the project. I hereby authorize the right of entry for periodic on-site evaluation by state of Maryland, Department of the Environment, Compliance Inspectors.

MDE Card Holder:

Date _____ Owner/Developer Signature _____ Thomas Scott, Construction Engineer
Printed Name and Title

Printed Name and Title _____ 03044
Card No.

SEQUENCE OF CONSTRUCTION FOR PIPE CULVERTS

1. Install initial sediment controls: diversion pipe, diversion fence, sandbags, filter bags, and silt fence and super silt fence (downstream of end section and riprap outfall) as shown on the plans.
2. Replace existing pipe or install new pipe as shown on the plans. Install riprap outfalls, inlets, and end structures as shown on the plans. Any sump water within the work area shall be pumped into a filter bag.
3. After stabilizing disturbances, install inlet protection as shown on plans. Remove diversion pipe, sandbags, and diversion fence at Sta. 19+75. Remove filter bags and designated sections of silt fence/super silt fence downstream of culvert end sections.

SEQUENCE OF CONSTRUCTION

1. Notify the Maryland Department of the Environment - Water Management Administration Compliance Program at (410) 537-3510 and the National Park Service (NPS) at least seven (7) days prior to starting work to arrange for a pre-construction conference.
2. Notify MISS UTILITY a minimum of 48 hours in advance of construction and secure a clearance ticket.
3. Install stabilized construction entrances, orange construction fence, drums, and temporary fencing and gates as shown on the plans. The lower parking lot will be permanently closed to public parking at this time. Access by the public to the Tavern and the canal will be available along the lower gravel path adjacent to the canal.
4. Install silt fence and super silt fence as shown on plans. Do not install silt fence or super silt fence from Sta. 34+00 to 36+00, Lt. or from Sta. 38+70 to 41+00, Rt. at this time, as noted on the plans.
5. Install inlet protection devices at the existing inlets as shown on plans.
6. Install tree protection fencing as shown on the plans and as directed by the C.O.
7. Install Temporary Stone Outlet Structures (TSOS) and diversion fence from Sta. 24+00 to 30+75, Lt.
8. Clear and grub within the limit of disturbance noted on the plan. The clearing and grubbing limit will be coordinated with the C.O. prior to any clearing.

> The following steps pertain to specific areas of the project that may be performed concurrently, but are separated for clarity.

DUCTBANK SYSTEM

9. Place traffic control devices.
10. Install ductbank system and manholes along the entrance road as shown on plans. Do not open more trench than can be backfilled and stabilized with stone by the end of each work day. Excavated material will be transported to a designated stockpile area stockpile area.
11. Upon completion of ductbank system installation, stabilize any remaining disturbed areas.

LOWER PARKING LOT AREA

12. Remove existing pavement, walkways, curbs, stone walls, and post and chain fencing within the lower parking lot area and dispose off site to an approved facility.
13. Grade lower parking lot area to finished elevations. Access to the tavern area by the NPS staff and the Army Corps of Engineers will be maintained at all times.
14. Install new roadway paving around the rotary and access road from the rotary to the pump house including storm drain system. Once the access road is completed, install the concrete pathway from the rotary to the tavern and remaining storm drain systems within the lower parking. Stabilize all disturbed areas with permanent seeding and mulching in accordance with 7/14 stabilization requirements.
15. Install new metal stairs prior to the demolition of the existing stairs.
16. Upon completion of all work in the Lower Parking Lot, stabilize any remaining disturbed areas.

UPPER PARKING LOT AND ROTARY

17. Install bus parking stalls.
18. Install orange construction fencing around the pavement areas to be repaired with full depth construction. Note that construction within the upper parking lot will be performed as to not displace more than 25% of the parking spaces at one time without approval from the C.O.
19. Remove existing and install new curbing.
20. Repair existing inlets (remove and replace existing frames and grates with bicycle-safe grates) and install new underdrain. Install inlet protection devices immediately upon completion of inlet construction.
21. Mill pavement and overlay the parking lot and rotary. Install pavement striping.
22. With the approval of MDE, remove inlet protection devices.
23. Clean existing inlets and pipes.
24. Upon completion of all work in the Upper Parking Lot and Rotary, stabilize any remaining disturbed areas.

ENTRANCE ROAD

25. Place traffic control devices.
26. Construct grade adjustment area of entrance road (between Stations 26+00 and 32+00). Note that the grade adjustment will be performed in stages and stabilized with stone at the end of each work day. Place base course.
27. Construct Embankment Stabilization as follows:
    - a. Install pipe diversion from upstream to downstream in accordance with Detail 1.4 on Sheet No. S2.
    - b. Install silt fence and place filter bag. Any encountered water within the Limit of Disturbance will be pumped to the filter bag.
    - c. Install geotextile and gabions in accordance with the detail on Sheet No. J3. Installation must be accomplished from the roadway.
    - d. Construct riprap outfall to grass channel. Grass channel No. 2 is to be constructed in Step 28 after road widening.
    - e. Stabilize any remaining disturbed areas. Remove sediment controls. Remove pipe diversion from downstream to upstream in accordance with Detail 1.4 on Sheet No. S2.
    - f. Install super silt fence at top of embankment from Sta. 34+00 to 36+00, Lt. as shown on plans
28. Construct cross culverts from I-3 to ES-1, EW-2 to EW-1, and I-5 to ES-2. Refer to the "Sequence of Construction for Pipe Culverts" on this sheet for more detailed construction information. Construction of each culvert (including the inlet, pipe, and outfall) shall be completed within one day. Remove and reset perimeter controls impacted by the culvert installation.
29. Construct widening (without surface course). Immediately stabilize any areas not treated by an approved erosion and sediment control device with stone at the end of each work day.
30. Remove silt fence adjacent to and crossing the grass channels for roadway widening where indicated on the plans. Construct grass channels for stormwater management including berms where shown once all surrounding earth-disturbing work has been completed and stabilized, including all contributing areas. Ditch construction shall progress from downstream to upstream. No more ditch shall be constructed in a single workday than can be stabilized by the end of that day. Ditches shall be stabilized with soil stabilization matting. Ensure that grass channels have been properly vegetatively established prior to close of the project.
31. Mill and overlay remaining sections of entrance road and place surface course for the entire roadway.
32. Install pavement striping.
33. With the approval of MDE, remove any remaining erosion and sediment control devices. Silt fence and diversion fence along the far side of grass channels must be removed by hand. No vehicles will be allowed in the grass channels during perimeter control removal.
34. Stabilize all remaining disturbed areas with seed and mulch in accordance with 7/14 day stabilization requirements.

U.S. DEPARTMENT OF TRANSPORTATION
FEDERAL HIGHWAY ADMINISTRATION
EASTERN FEDERAL LANDS HIGHWAY DIVISION
STERLING, VIRGINIA

CHESAPEAKE & OHIO CANAL
NATIONAL HISTORICAL PARK
GREAT FALLS ENTRANCE ROAD & PARKING LOTS

EROSION & SEDIMENT CONTROL NOTES

NPS NO.	REG	STATE	PROJECT	SHEET NO.
412 / 41,911	NCR	MD	PRA-CHOH 102 (1)	M2

SEEDING SPECIFICATIONS AND NOTES

SECTION 1-VEGETATIVE STABILIZATION METHODS AND MATERIALS

A. SITE PREPARATION

1. INSTALL EROSION AND SEDIMENT CONTROL STRUCTURES (EITHER TEMPORARY OR PERMANENT) SUCH AS DIVERSIONS, GRADE STABILIZATION STRUCTURES, BERMS, WATERWAYS, OR SEDIMENT CONTROL BASINS.

2. PERFORM ALL GRADING OPERATIONS AT RIGHT ANGLES TO THE SLOPE. FINAL GRADING AND SHAPING IS NOT USUALLY NECESSARY FOR TEMPORARY SEEDING.

3. SCHEDULE REQUIRED SOIL TESTS TO DETERMINE SOIL AMENDMENT COMPOSITION AND APPLICATION RATES FOR SITES HAVING DISTURBED AREA OVER 5 ACRES.

B. SITE AMENDMENTS (FERTILIZER AND LIME SPECIFICATIONS)

1. SOIL TESTS MUST BE PERFORMED TO DETERMINE THE EXACT RATIOS AND APPLICATION RATES FOR BOTH LIME AND FERTILIZER ON SITES HAVING DISTURBED AREAS OVER 5 ACRES. SOIL ANALYSIS MAY BE PERFORMED BY THE UNIVERSITY OF MARYLAND OR A RECOGNIZED COMMERCIAL LABORATORY. SOIL SAMPLES TAKEN FOR ENGINEERING PURPOSES MAY ALSO BE USED FOR CHEMICAL ANALYSES.

2. FERTILIZERS SHALL BE UNIFORM IN COMPOSITION, FREE FLOWING AND SUITABLE FOR ACCURATE APPLICATION BY APPROVED EQUIPMENT. MANURE MAY BE SUBSTITUTED FOR FERTILIZER WITH PRIOR APPROVAL FROM THE APPROPRIATE APPROVAL AUTHORITY. FERTILIZERS SHALL ALL BE DELIVERED TO THE SITE FULLY LABELED ACCORDING TO THE APPLICABLE STATE FERTILIZER LAWS AND SHALL BEAR THE NAME, TRADE NAME OR TRADEMARK AND WARRANTEE OF THE PRODUCER.

3. LIME MATERIALS SHALL BE GROUND LIMESTONE (HYDRATED OR BURNT LIME MAY BE SUBSTITUTED) WHICH CONTAINS AT LEAST 50 PERCENT TOTAL OXIDES (CALCIUM OXIDE PLUS MAGNESIUM OXIDE). LIMESTONE SHALL BE GROUND TO SUCH FINENESS THAT AT LEAST 50 PERCENT WILL PASS THROUGH A NO. 100 MESH SIEVE AND 98 - 100 PERCENT WILL PASS THROUGH A NO.20 MESH SIEVE.

4. INCORPORATE LIME AND FERTILIZER INTO THE TOP 3 TO 5 INCHES OF SOIL BY DISKING OR OTHER SUITABLE MEANS.

C. SEEDBED PREPARATION

1. TEMPORARY SEEDING

a. SEEDBED PREPARATION SHALL CONSIST OF LOOSENING SOIL TO A DEPTH OF 3 INCHES TO 5 INCHES BY MEANS OF SUITABLE AGRICULTURAL OR CONSTRUCTION EQUIPMENT, SUCH AS DISC HARROWS OR CHISEL PLOWS OR RIPPERS MOUNTED ON CONSTRUCTION EQUIPMENT. AFTER THE SOIL IS LOOSENED IT SHOULD NOT BE ROLLED OR DRAGGED SMOOTH BUT LEFT IN THE ROUGHENED CONDITION. SLOPED AREAS (GREATER THAN 3:1) SHOULD BE TRACKED LEAVING THE SURFACE IN A IRREGULAR CONDITION WITH RIDGES RUNNING PARALLEL TO THE CONTOUR OF THE SLOPE.

b. APPLY FERTILIZER AND LIME AS PRESCRIBED ON THE PLANS.

c. INCORPORATE LIME AND FERTILIZER INTO THE TOP 3 TO 5 INCHES OF SOIL BY DISKING OR OTHER SUITABLE MEANS.

2. PERMANENT SEEDING

a. MINIMUM SOIL CONDITIONS REQUIRED FOR PERMANENT VEGETATIVE ESTABLISHMENT:

(1) SOIL PH SHALL BE BETWEEN 6.0 AND 7.0.

(2) SOLUBLE SALTS SHALL BE LESS THAN 500 PARTS PER MILLION (PPM).

(3) THE SOIL SHALL CONTAIN LESS THAN 40 PERCENT CLAY BUT ENOUGH FINE GRAINED MATERIAL (> 30 PERCENT SILT PLUS CLAY) TO PROVIDE THE CAPACITY TO HOLD A MODERATE AMOUNT OF MOISTURE. AN EXCEPTION IS IF LOVEGRASS OR SERECIA LESPEDEZA IS TO BE PLANTED, THEN A SANDY SOIL (<30 PERCENT SILT PLUS CLAY) WOULD BE ACCEPTABLE.

(4) SOIL SHALL CONTAIN 1.5 PERCENT MINIMUM ORGANIC MATTER BY WEIGHT.

(5) SOIL MUST CONTAIN SUFFICIENT PORE SPACE TO PERMIT ADEQUATE ROOT PENETRATION.

(6) IF THESE CONDITIONS CANNOT BE MET BY SOILS ON SITE, ADDING TOPSOIL IS REQUIRED IN ACCORDANCE WITH SECTION 2) STANDARD AND SPECIFICATION FOR TOPSOIL.

b. AREAS PREVIOUSLY GRADED IN CONFORMANCE WITH THE DRAWINGS SHALL BE MAINTAINED IN A TRUE AND EVEN GRADE, THEN SCARIFIED OR OTHERWISE LOOSENED TO A DEPTH OF 3 TO 5 INCHES TO PERMIT BONDING OF THE TOPSOIL TO THE SURFACE AREA AND TO CREATE HORIZONTAL EROSION CHECK SLOTS TO PREVENT TOPSOIL FROM SLIDING DOWN A SLOPE.

c. APPLY SOIL AMENDMENTS AS PER SOIL TEST OR AS INCLUDED ON THE PLANS.

d. MIX SOIL AMENDMENTS INTO THE TOP 3 TO 5 INCHES OF TOPSOIL BY DISKING OR OTHER SUITABLE MEANS. LAWN AREAS SHOULD BE RAKED TO SMOOTH THE SURFACE, REMOVE LARGE OBJECTS LIKE STONES AND BRANCHES, AND READY THE AREA FOR SEED APPLICATION. WHERE SITE CONDITIONS WILL NOT PERMIT NORMAL SEEDBED PREPARATION, LOOSEN SURFACE SOIL BY DRAGGING WITH A HEAVY CHAIN OR OTHER EQUIPMENT TO ROUGHEN THE SURFACE. STEEP SLOPES (STEEPER THAN 3:1) SHOULD BE TRACKED BY A DOZER LEAVING THE SOIL IN AN IRREGULAR CONDITION WITH RIDGES RUNNING PARALLEL TO THE CONTOUR OF THE SLOPE. THE TOP 1 TO 3 INCHES OF SOIL SHOULD BE LOOSE AND FRIABLE. SEEDBED LOOSENING MAY NOT BE NECESSARY ON NEWLY DISTURBED AREAS.

D. SEED SPECIFICATIONS

1. ALL SEED MUST MEET THE REQUIREMENTS OF THE MARYLAND STATE SEED LAW. ALL SEED SHALL BE SUBJECT TO RETESTING BY A RECOGNIZED SEED LABORATORY. ALL SEED USED SHALL HAVE BEEN TESTED WITHIN THE SIX MONTHS IMMEDIATELY PRECEDING THE DATE OF SOWING SUCH MATERIAL ON THIS JOB.

NOTE: SEED TAGS SHALL BE MADE AVAILABLE TO THE INSPECTOR TO VERIFY TYPE AND RATE OF SEED USED.

2. INOCULANT - THE INOCULANT FOR TREATING LEGUME SEED IN THE SEED MIXTURES SHALL BE PURE CULTURE OF NITROGEN-FIXING BACTERIA PREPARED SPECIFICALLY FOR THE SPECIES. INOCULANTS SHALL NOT BE USED LATER THAN THE DATE INDICATED ON THE CONTAINER. ADD FRESH INOCULANT AS DIRECTED ON PACKAGE. USE FOUR TIMES THE RECOMMENDED RATE WHEN HYDROSEEDING. NOTE: IT IS VERY IMPORTANT TO KEEP INOCULANT AS COOL AS POSSIBLE UNTIL USED. TEMPERATURES ABOVE 75 TO 80 DEGREES F CAN WEAKEN BACTERIA AND MAKE THE INOCULANT LESS EFFECTIVE.

E. METHODS OF SEEDING

1. HYDROSEEDING: APPLY SEED UNIFORMLY WITH HYDROSEEDER (SLURRY INCLUDES SEED AND FERTILIZER), BROADCAST OR DROP SEEDER, OR A CULTIPACKER SEEDER.

a. IF FERTILIZER IS BEING APPLIED AT THE TIME OF SEEDING, THE APPLICATION RATES AMOUNTS WILL NOT EXCEED THE FOLLOWING: NITROGEN; MAXIMUM OF 100 LBS. PER ACRE TOTAL OF SOLUBLE NITROGEN; P205 (PHOSPHOROUS): 200 POTASSIUM): 200 LBS/AC.

b. LIME - USE ONLY GROUND AGRICULTURAL LIMESTONE. (UP TO 3 TONS PER ACRE MAY BE APPLIED BY HYDROSEEDING). NORMALLY, NOT MORE THAN 2 TONS ARE APPLIED BY HYDROSEEDING AT ANY ONE TIME. DO NOT USE BURNT OR HYDRATED LIME WHEN HYDROSEEDING.

c. SEED AND FERTILIZER SHALL BE MIXED ON SITE AND SEEDING SHALL BE DONE IMMEDIATELY AND WITHOUT INTERRUPTION.

2. DRY SEEDING: THIS INCLUDES USE OF CONVENTIONAL DROP OR BROADCAST SPREADERS.

a. SEED SPREAD DRY SHALL BE INCORPORATED INTO THE SUBSOIL AT THE RATES PRESCRIBED ON THE TEMPORARY OR PERMANENT SEEDING SUMMARIES OR TABLES 25 OR 26. THE SEEDED AREA SHALL THEN BE ROLLED WITH A WEIGHTED ROLLER TO PROVIDE GOOD SEED TO SOIL CONTACT.

b. WHERE PRACTICAL, SEED SHOULD BE APPLIED IN TWO DIRECTIONS PERPENDICULAR TO EACH OTHER. APPLY HALF THE SEEDING RATE IN EACH DIRECTION.

3. DRILL OR CULTIPACKER SEEDING: MECHANIZED SEEDERS THAT APPLY AND COVER SEED WITH SOIL.

a. CULTIPACKING SEEDERS ARE REQUIRED TO BURY THE SEED IN SUCH A FASHION AS TO PROVIDE AT LEAST 1/4-INCH OF SOIL COVERING. SEEDBED MUST BE FIRM AFTER PLANTING.

b. WHERE PRACTICAL, SEED SHOULD BE APPLIED IN TWO DIRECTIONS PERPENDICULAR TO EACH OTHER. APPLY HALF THE SEEDING RATE IN EACH DIRECTION.

F. MULCH SPECIFICATIONS (IN ORDER OF PREFERENCE)

1. STRAW SHALL CONSIST OF THOROUGHLY THRESHED WHEAT, RYE OR OAT STRAW, REASONABLY BRIGHT IN COLOR, AND SHALL NOT BE MUSTY, MOLDY, CAKED, DECAYED OR EXCESSIVELY DUSTY AND SHALL BE FREE OF NOXIOUS WEED SEEDS AS SPECIFIED IN THE MARYLAND SEED LAW.

2. WOOD CELLULOSE FIBER MULCH (WCFM)

a. WCFM SHALL CONSIST OF SPECIALLY PREPARED WOOD CELLULOSE PROCESSED INTO A UNIFORM FIBROUS PHYSICAL STATE.

b. WCFM SHALL BE DYED GREEN OR CONTAIN A GREEN DYE IN THE PACKAGE THAT WILL PROVIDE AN APPROPRIATE COLOR TO FACILITATE VISUAL INSPECTION OF THE UNIFORMLY SPREAD SLURRY.

c. WCFM, INCLUDING DYE, SHALL CONTAIN NO GERMINATION OR GROWTH INHIBITING FACTORS.

d. WCFM MATERIALS SHALL BE MANUFACTURED AND PROCESSED IN SUCH A MANNER THAT THE WOOD CELLULOSE FIBER MULCH WILL REMAIN IN UNIFORM SUSPENSION IN WATER UNDER AGITATION AND WILL BLEND WITH SEED, FERTILIZER, AND OTHER ADDITIVES TO FORM A HOMOGENEOUS SLURRY. THE MULCH MATERIAL SHALL FORM A BLOTTER-LIKE GROUND COVER, ON APPLICATION, HAVING MOISTURE ABSORPTION AND PRECOLATION PROPERTIES AND SHALL COVER AND HOLD GRASS SEED IN CONTACT WITH THE SOIL WITHOUT INHIBITING THE GROWTH OF THE GRASS SEEDLINGS.

e. WCFM MATERIAL SHALL CONTAIN NO ELEMENTS OR COMPOUNDS AT CONCENTRATION LEVELS THAT WILL BE PHYTO-TOXIC.

f. WCFM MUST CONFORM TO THE FOLLOWING PHYSICAL REQUIREMENTS: FIBER LENGTH TO APPROXIMATELY 10 mm, DIAMETER APPROXIMATELY 1 mm, PH RANGE OF 4.0 TO 8.5, ASH CONTENT OF 1.6 PERCENT MAXIMUM AND WATER HOLDING CAPACITY OF 90 PERCENT MINIMUM.

NOTE: ONLY STERILE STRAW MULCH SHOULD BE USED IN AREAS WHERE ONE SPECIES OF GRASS IS DESIRED.

G. MULCHING SEEDED AREAS - MULCH SHALL BE APPLIED TO ALL SEEDED AREAS IMMEDIATELY AFTER SEEDING.

1. IF GRADING IS COMPLETED OUTSIDE OF THE SEEDING SEASON, MULCH ALONE SHALL BE APPLIED AS PRESCRIBED IN THIS SECTION AND MAINTAINED UNTIL THE SEEDING SEASON RETURNS AND SEEDING CAN BE PERFORMED IN ACCORDANCE WITH THESE SPECIFICATIONS.

2. WHEN STRAW MULCH IS USED, IT SHALL BE SPREAD OVER ALL SEEDED AREAS AT THE RATE OF 2 TONS/ACRE. MULCH SHALL BE APPLIED TO A UNIFORM LOOSE DEPTH OF BETWEEN 1 AND 2 INCHES. MULCH APPLIED SHALL ACHIEVE A UNIFORM DISTRIBUTION AND DEPTH SO THAT THE SOIL SURFACE IS NOT EXPOSED. IF A MULCH ANCHORING TOOL IS TO BE USED, THE RATE SHOULD BE INCREASED TO 2.5 TONS/ACRE.

3. WOOD CELLULOSE FIBER USED AS A MULCH SHALL BE APPLIED AT A NET DRY WEIGHT OF 1,500 LBS. PER ACRE. THE WOOD CELLULOSE FIBER SHALL BE MIXED WITH WATER, AND THE MIXTURE SHALL CONTAIN A MAXIMUM OF 50 LBS. OF WOOD CELLULOSE FIBER PER 100 GALLONS OF WATER.

H. SECURING STRAW MULCH (MULCH ANCHORING): MULCH ANCHORING SHALL BE PERFORMED IMMEDIATELY FOLLOWING MULCH APPLICATION TO MINIMIZE LOSS BY WIND OR WATER. THIS MAY BE DONE BY ONE OF THE FOLLOWING METHODS (LISTED BY PREFERENCE), DEPENDING UPON SIZE OF AREA AND EROSION HAZARD:

1. A MULCH ANCHORING TOOL IS A TRACTOR DRAWN IMPLEMENT DESIGNED TO PUNCH AND ANCHOR MULCH INTO THE SOIL SURFACE A MINIMUM OF 2 INCHES. THIS PRACTICE IS MOST EFFECTIVE ON LARGE AREAS, BUT IS LIMITED TO FLATTER SLOPES WHERE EQUIPMENT CAN OPERATE SAFELY. IF USED ON SLOPING LAND, THIS PRACTICE SHOULD BE USED ON THE CONTOUR IF POSSIBLE.

2. WOOD CELLULOSE FIBER MAY BE USED FOR ANCHORING STRAW. THE FIBER BINDER SHALL BE APPLIED AT A NET DRY WEIGHT OF 750 POUNDS/ACRE. THE WOOD CELLULOSE FIBER SHALL BE MIXED WITH WATER AND THE MIXTURE SHALL CONTAIN A MAXIMUM OF 50 POUNDS OF WOOD CELLULOSE FIBER PER 100 GALLONS OF WATER.

3. APPLICATION OF LIQUID BINDERS SHOULD BE HEAVIER AT THE EDGES WHERE WIND CATCHES MULCH, SUCH AS IN VALLEYS AND ON CRESTS OF BANKS. THE REMAINDER OF AREA SHOULD APPEAR UNIFORM AFTER BINDER APPLICATION. SYNTHETIC BINDERS - SUCH AS ACRYLIC DLR (AGRO-TACK), DCA-70, PETROSET, TERRA TAX II, TERRA TACK AR OR OTHER APPROVED EQUAL MAY BE USED AT RATES RECOMMENDED BY THE MANUFACTURER TO ANCHOR MULCH.

4. LIGHTWEIGHT: PLASTIC NETTING MAY BE STAPLED OVER THE MULCH ACCORDING TO MANUFACTURER'S RECOMMENDATIONS. NETTING IS USUALLY AVAILABLE IN ROLLS 4 TO 15 FEET WIDE AND 300 TO 3,000 FEET LONG.

I. INCREMENTAL STABILIZATION - CUT SLOPES

1. ALL CUT SLOPES SHALL BE DRESSED, PREPARED, SEEDED, AND MULCHED AS THE WORK PROGRESSES. SLOPES SHALL BE EXCAVATED AND STABILIZED IN EQUAL INCREMENTS NOT TO EXCEED 15 FEET.

2. CONSTRUCTION SEQUENCE (REFER TO FIGURE 3 BELOW):

a. EXCAVATE AND STABILIZE ALL TEMPORARY SWALES, SIDE DITCHES, OR BERMS THAT WILL BE USED TO CONVEY RUNOFF FROM THE EXCAVATION.

b. PERFORM PHASE 1 EXCAVATION, DRESS, AND STABILIZE.

c. PERFORM PHASE 2 EXCAVATION, DRESS, AND STABILIZE. OVERSEED PHASE 1 AREAS AS NECESSARY.

d. PERFORM FINAL PHASE EXCAVATION, DRESS, AND STABILIZE. OVERSEED PREVIOUSLY SEEDED AREAS AS NECESSARY.

NOTE: ONCE EXCAVATION HAS BEGUN THE OPERATION SHOULD BE CONTINUOUS FROM GRUBBING THROUGH THE COMPLETION OF GRADING AND PLACEMENT OF TOPSOIL (IF REQUIRED) AND PERMANENT SEED AND MULCH. ANY INTERRUPTIONS IN THE OPERATIONS OR COMPLETING THE OPERATION OUT OF THE SEEDING SEASON WILL NECESSITATE THE APPLICATION OF TEMPORARY STABILIZATION.

J. INCREMENTAL STABILIZATION OF EMBANKMENTS - FILL SLOPES

1. EMBANKMENTS SHALL BE CONSTRUCTED IN LIFTS AS PRESCRIBED ON THE PLANS.

2. SLOPES SHALL BE STABILIZED IMMEDIATELY WHEN THE VERTICAL HEIGHT OF THE MULTIPLE LIFTS REACHES 15 FEET, OR WHEN GRADING OPERATION CREASES AS PRESCRIBED IN THE PLANS.

3. AT THE END OF EACH DAY, TEMPORARY BERMS AND PIPE SLOPE DRAINS SHOULD BE CONSTRUCTED ALONG THE TOP EDGE OF THE EMBANKMENT TO INTERCEPT SURFACE RUNOFF AND CONVEY IT DOWN THE SLOPE IN A NON-EROSIVE MANNER TO A SEDIMENT TRAPPING DEVICE.

4. CONSTRUCTION SEQUENCE:

a. EXCAVATE AND STABILIZE ALL TEMPORARY SWALES, SIDE DITCHES, OR BERMS THAT WILL BE USED TO DIVERT RUNOFF AROUND THE FILL. CONSTRUCT SLOPE SILT FENCE ON LOW SIDE OF FILL AS SHOWN IN FIGURE 5, UNLESS OTHER METHODS SHOWN ON THE PLANS ADDRESS THIS AREA.

b. PLACE PHASE 1 EMBANKMENT, DRESS AND STABILIZE.

c. PLACE PHASE 2 EMBANKMENT, DRESS AND STABILIZE.

d. PLACE FINAL PHASE EMBANKMENT, DRESS AND STABILIZE. OVERSEED PREVIOUSLY SEEDED AREAS AS NECESSARY.

NOTE: ONCE THE PLACEMENT OF FILL HAS BEGUN THE OPERATION SHOULD BE CONTINUOUS FROM GRUBBING THROUGH THE COMPLETION OF GRADING AND PLACEMENT OF TOPSOIL (IF REQUIRED) AND PERMANENT SEED AND MULCH. ANY INTERRUPTIONS IN THE OPERATION OR COMPLETING THE OPERATION OUT OF THE SEEDING SEASON WILL NECESSITATE THE APPLICATION OF TEMPORARY STABILIZATION.

SECTION 11-TEMPORARY AND PERMANENT SEEDING

VEGETATION - ANNUAL GRASS OR GRAIN USED TO PROVIDE COVER ON DISTURBED AREAS FOR UP TO 12 MONTHS. FOR LONGER DURATION OF VEGETATIVE COVER, PERMANENT SEEDING IS REQUIRED.

A. C&O CANAL GRASS SEED MIXTURES

TEMPORARY GRASS SEED MIX TO BE USED FOR TEMPORARY STABILIZATION OF SOILS IN THE PARK

SEED MIX 1:
- 75% ANNUAL RYEGRASS
- 10% PERENNIAL RYEGRASS
- 15% CREEPING RED FESCUE

SEEDING RATE - 50 LBS PER ACRE OF PURE LIVE SEED OR 1 LBS. PER 1000 SQUARE FEET (90% PURITY)
SEEDING DEPTH - 1" TO 2"
SEEDING DATES - 2/1 - 4/30 AND 8/15 - 11/1

SEED MIX 2:
- 95% BARLEY OR RYE
- 5% FOXTAIL MILLET

SEEDING RATE - 150 LBS PER ACRE OF PURE LIVE SEED
SEEDING DEPTH - 1½" TO 2"
SEEDING DATES - 5/1 to 5/14

PERMANENT GRASS SEED MIX TO BE USED FOR PERMANENT STABILIZATION OF SITES TO BE MOWED IN THE PARK

- 30% BLUE SHEEP FESCUE*
- 30% RED (CHEWINGS) FESCUE
- 20% PERENNIAL RYEGRASS
- 10% REDTOP GRASS
- 10% ANNUAL RYEGRASS

SEEDING RATE - 100 LBS. PER ACRE OF PURE LIVE SEED (90% PURITY)
SEEDING DEPTH - 1/4"
SEEDING DATES - 3/1 - 5/15 AND 8/15 - 11/15

* COULD USE HARD FESCUE INSTEAD OF BLUE SHEEP FESCUE.

SOURCES FOR SEED

LOFTS SEED COMPANY	301-937-9292
ION EXCHANGE	1-800-291-2143
NEWSOME SEED	1-800-553-2719

SECTION 111 - SOD: TO PROVIDE QUICK COVER ON DISTURBED AREAS (2:1 GRADE OR FLATTER).

A. GENERAL SPECIFICATIONS

1. CLASS OF TURFGRASS SOD SHALL BE MARYLAND OR VIRGINIA STATE CERTIFIED OR APPROVED. SOD LABELS SHALL BE MADE AVAILABLE TO THE JOB FOREMAN AND INSPECTOR.

2. SOD SHALL BE MACHINE CUT AT A UNIFORM SOIL THICKNESS OF 3/4-INCH, PLUS OR MINUS 1/4-INCH, AT THE TIME OF CUTTING. MEASUREMENT FOR THICKNESS SHALL EXCLUDE TOP GROWTH AND THATCH. INDIVIDUAL PIECES OF SOD SHALL BE CUT TO THE SUPPLIERS WIDTH AND LENGTH. MAXIMUM ALLOWABLE DEVIATION FROM STANDARD WIDTHS AND LENGTHS SHALL BE 5 PERCENT. BROKEN PADS AND TORN OR UNEVEN ENDS WILL NOT BE ACCEPTABLE.

3. STANDARD SIZE SECTIONS OF SOD SHALL BE STRONG ENOUGH TO SUPPORT THEIR OWN WEIGHT AND RETAIN THEIR SIZE AND SHAPE WHEN SUSPENDED VERTICALLY WITH A FIRM GRASP ON THE UPPER 10 PERCENT OF THE SECTION.

4. SOD SHALL NOT BE HARVESTED OR TRANSPLANTED WHEN MOISTURE CONTENT (EXCESSIVELY DRY OR WET) MAY ADVERSELY AFFECT ITS SURVIVAL.

5. SOD SHALL BE HARVESTED, DELIVERED, AND INSTALLED WITHIN A PERIOD OF 36 HOURS. SOD NOT TRANSPLANTED WITHIN THIS PERIOD SHALL BE APPROVED BY AN AGRONOMIST OR SOIL SCIENTIST PRIOR TO ITS INSTALLATION.

B. SOD INSTALLATION

1. DURING PERIODS OF EXCESSIVELY HIGH TEMPERATURE OR IN AREAS HAVING DRY SUBSOIL, THE SUBSOIL SHALL BE LIGHTLY IRRIGATED IMMEDIATELY PRIOR TO LAYING THE SOD.

2. THE FIRST ROW OF SOD SHALL BE LAID IN A STRAIGHT LINE WITH SUBSEQUENT ROWS PLACED PARALLEL TO AND TIGHTLY WEDGED AGAINST EACH OTHER. LATERAL JOINTS SHALL BE STAGGERED TO PROMOTE MORE UNIFORM GROWTH AND STRENGTH. ENSURE THAT SOD IS NOT STRETCHED OR OVERLAPPED AND THAT ALL JOINTS ARE BUTTED TIGHT IN ORDER TO PREVENT VOIDS WHICH WOULD CAUSE AIR DRYING OF THE ROOTS.

3. WHEREVER POSSIBLE, SOD SHALL BE LAID WITH THE LONG EDGES PARALLEL TO THE CONTOUR AND WITH STAGGERING JOINTS. SOD SHALL BE ROLLED AND TAMPED, PEGGED OR OTHERWISE SECURED TO PREVENT SLIPPAGE ON SLOPES AND TO ENSURE SOLID CONTACT BETWEEN SOD ROOTS AND THE UNDERLYING SOIL SURFACE.

4. SOD SHALL BE WATERED IMMEDIATELY FOLLOWING ROLLING OR TAMPING UNTIL THE UNDERSIDE OF THE NEW SOD PAD AND SOIL SURFACE BELOW THE SOD ARE THOROUGHLY WET. THE OPERATIONS OF LAYING, TAMPING AND IRRIGATING FOR ANY PIECE OF SOD SHALL BE COMPLETED WITHIN EIGHT HOURS.

U.S. DEPARTMENT OF TRANSPORTATION
FEDERAL HIGHWAY ADMINISTRATION
EASTERN FEDERAL LANDS HIGHWAY DIVISION
STERLING, VIRGINIA

CHESAPEAKE & OHIO CANAL
NATIONAL HISTORICAL PARK
GREAT FALLS ENTRANCE ROAD & PARKING LOTS

SEEDING SPECIFICATIONS AND NOTES

ferner 9/20/2007 8:56:13 AM o:\dlf000117\01\cad\plans\ep00ac&o.dgn

NPS NO.	REG	STATE	PROJECT	SHEET NO.
412 41,911	NCR	MD	PRA-CHOH 102 (1)	M3

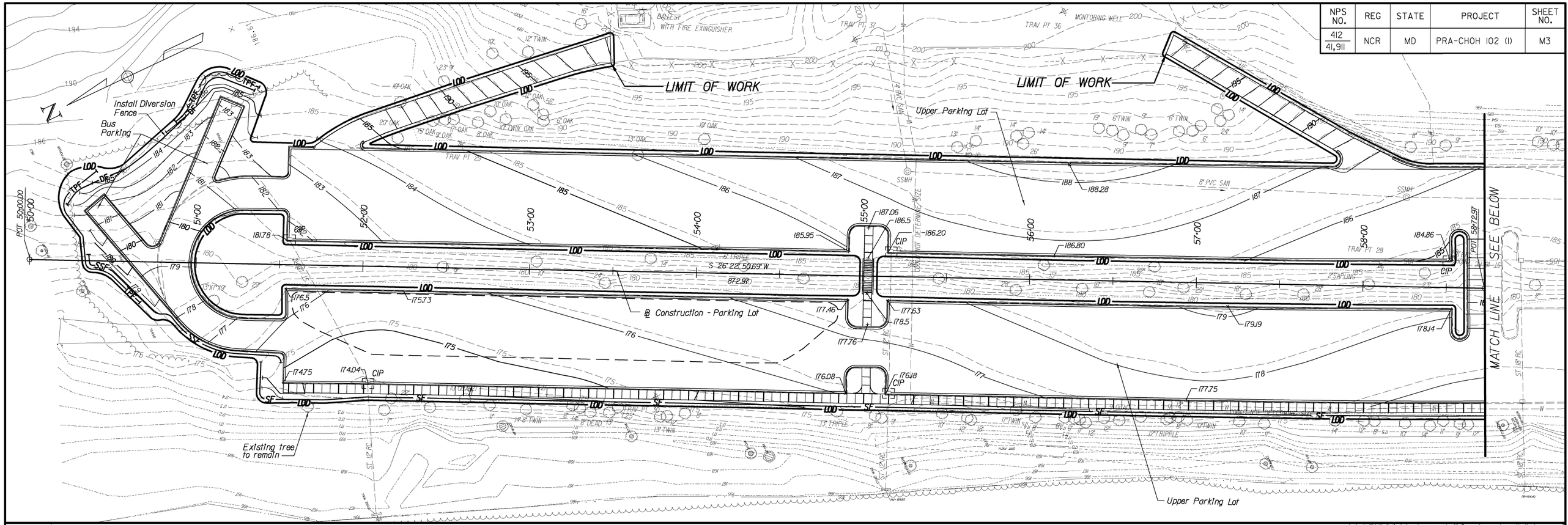

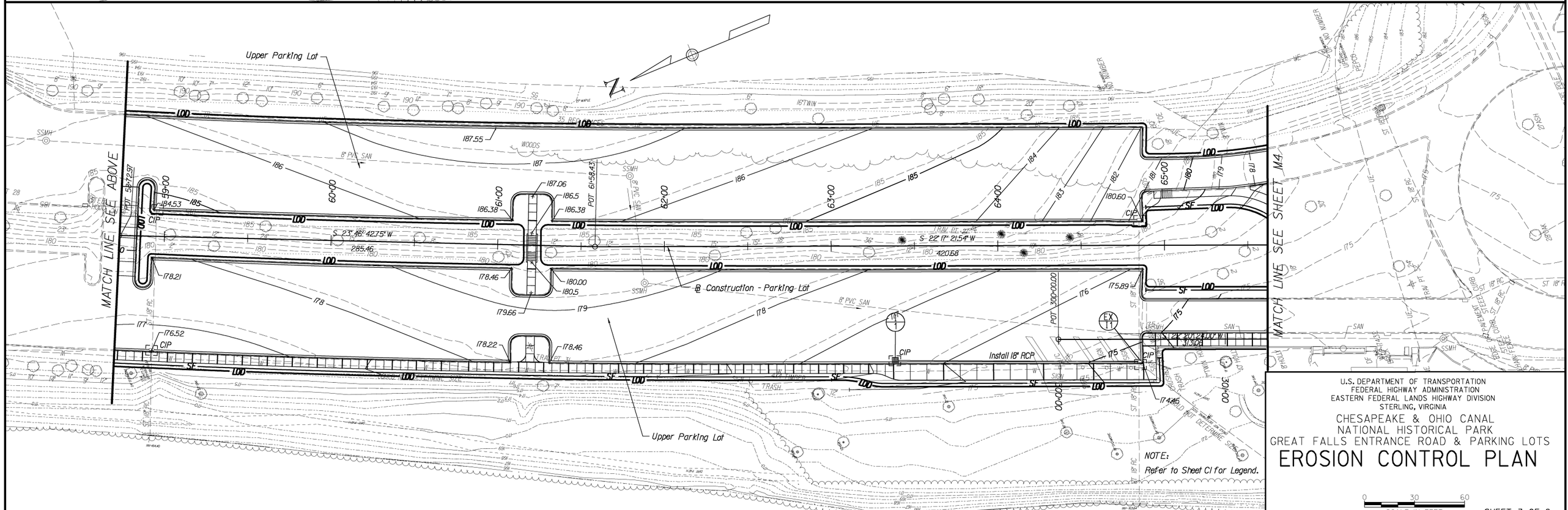

NOTE:
Refer to Sheet C1 for Legend.

U.S. DEPARTMENT OF TRANSPORTATION
FEDERAL HIGHWAY ADMINISTRATION
EASTERN FEDERAL LANDS HIGHWAY DIVISION
STERLING, VIRGINIA

CHESAPEAKE & OHIO CANAL
NATIONAL HISTORICAL PARK
GREAT FALLS ENTRANCE ROAD & PARKING LOTS

EROSION CONTROL PLAN

0 30 60
SCALE IN FEET

SHEET 3 OF 8

NPS NO.	REG	STATE	PROJECT	SHEET NO.
412 / 41,911	NCR	MD	PRA-CHOH 102 (1)	M4

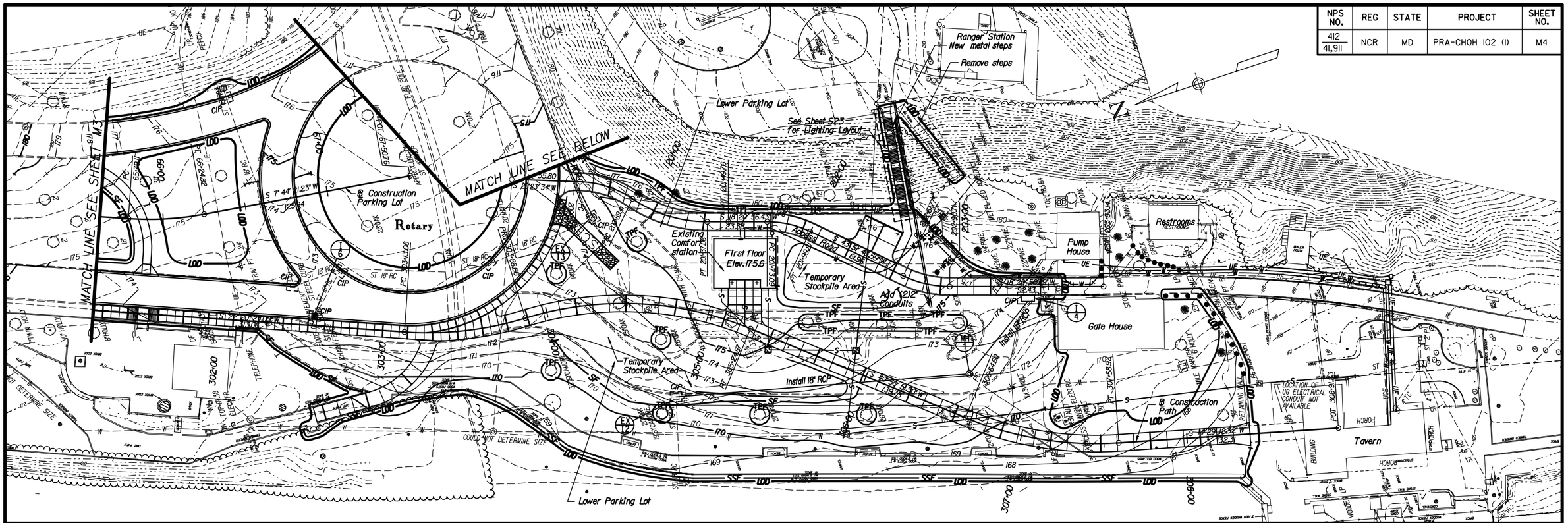

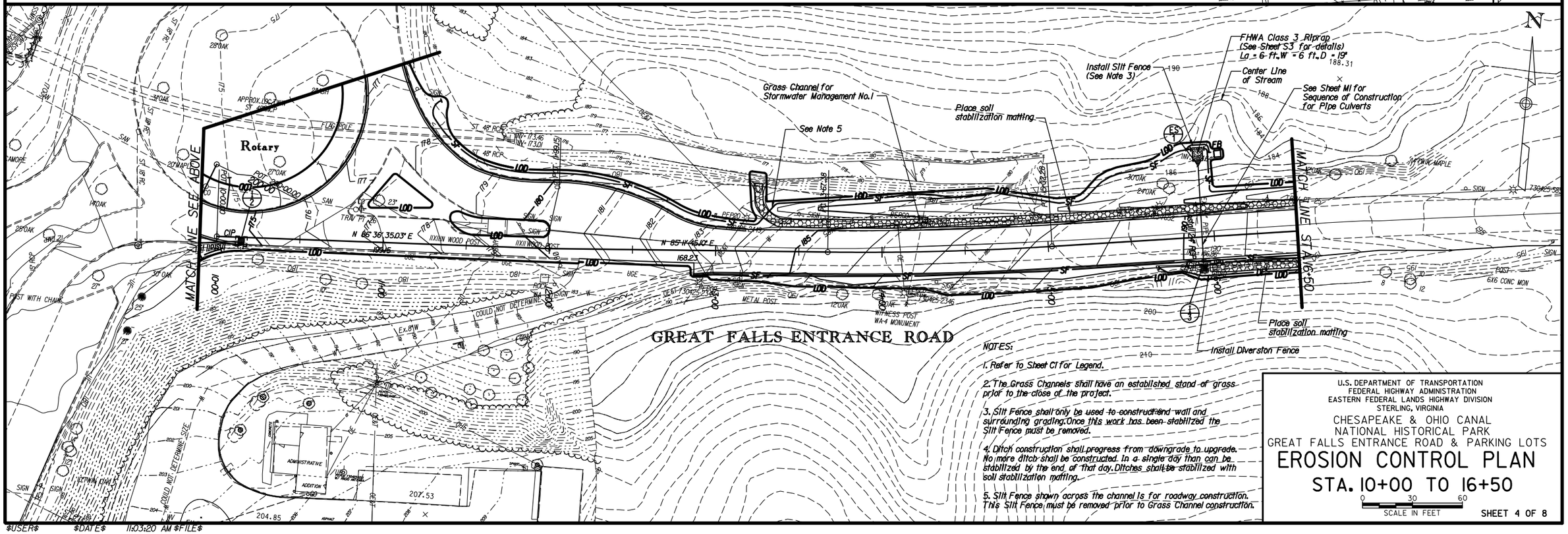

NOTES:

1. Refer to Sheet C1 for Legend.
2. The Grass Channels shall have an established stand of grass prior to the close of the project.
3. Silt Fence shall only be used to construct end wall and surrounding grading. Once this work has been stabilized the Silt Fence must be removed.
4. Ditch construction shall progress from downgrade to upgrade. No more ditch shall be constructed in a single day than can be stabilized by the end of that day. Ditches shall be stabilized with soil stabilization matting.
5. Silt Fence shown across the channel is for roadway construction. This Silt Fence must be removed prior to Grass Channel construction.

U.S. DEPARTMENT OF TRANSPORTATION
FEDERAL HIGHWAY ADMINISTRATION
EASTERN FEDERAL LANDS HIGHWAY DIVISION
STERLING, VIRGINIA

CHESAPEAKE & OHIO CANAL
NATIONAL HISTORICAL PARK
GREAT FALLS ENTRANCE ROAD & PARKING LOTS

EROSION CONTROL PLAN

STA. 10+00 TO 16+50

0 30 60
SCALE IN FEET

SHEET 4 OF 8

$USER$ $DATE$ 11:03:20 AM $FILE$

NPS NO.	REG	STATE	PROJECT	SHEET NO.
412 / 41,911	NCR	MD	PRA-CHOH 102 (1)	M5

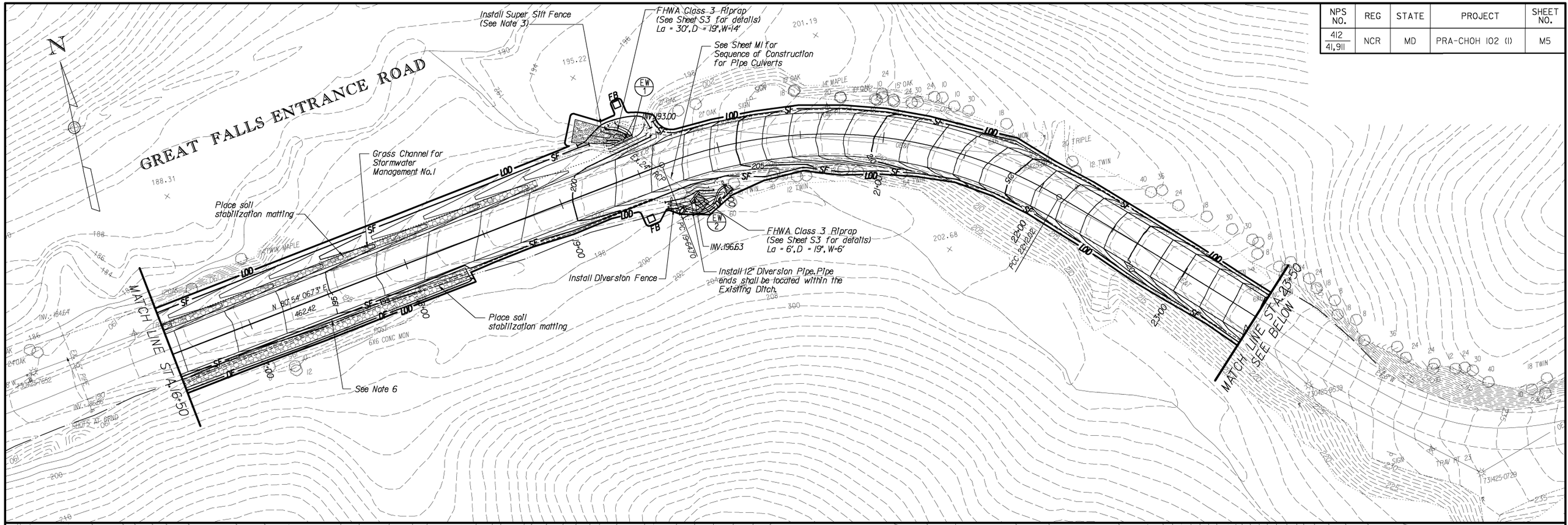

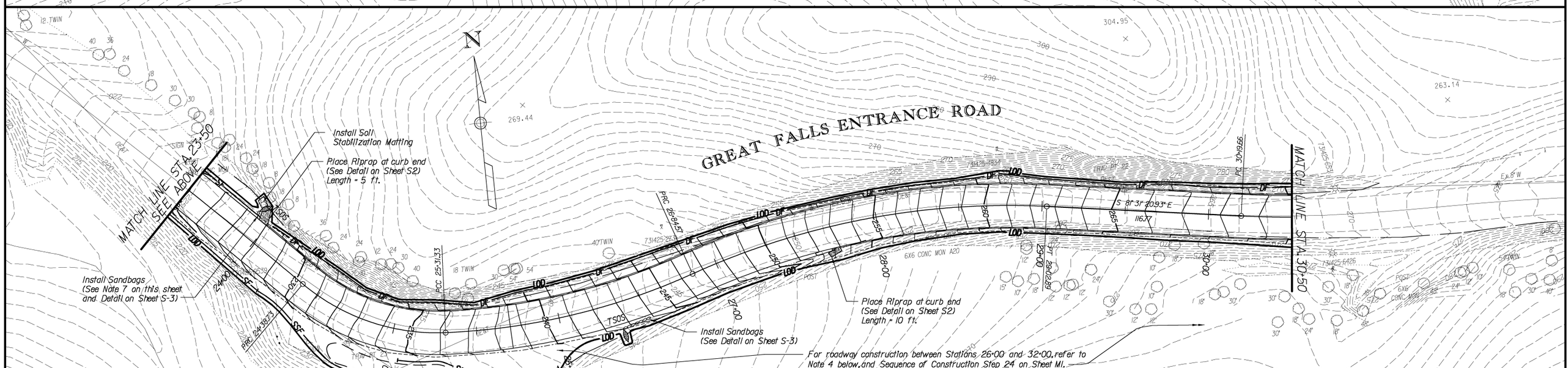

NOTES:

1. Refer to Sheet C1 for Legend.

2. The grass channels shall have an established stand of grass prior to the close of the project.

3. Super Silt Fence shall only be used to construct end wall and surrounding grading. Once this work has been stabilized the Super Silt Fence must be removed.

4. Disturbances in the designated area shall be stabilized by the end of the workday. No more area shall be disturbed than can be stabilized by the end of the workday. No disturbed area shall be left unstabilized overnight. The slope shall be stabilized immediately with topsoil, seed and soil stabilization matting.

5. Ditch construction shall progress from downgrade to upgrade. No more ditch shall be constructed in a single workday than can be stabilized by the end of that day. Ditches shall be stabilized with soil stabilization matting.

6. Silt Fence adjacent to ditch from Sta. 16+00 to 18+35, Rt. is for roadway widening only. This Silt Fence must be removed prior to ditch construction.

7. Sandbags shall be used to divert runoff into the TSOS during full-depth excavation. Once the widened area has been stabilized with aggregate base the sandbags may be removed.

U.S. DEPARTMENT OF TRANSPORTATION
FEDERAL HIGHWAY ADMINISTRATION
EASTERN FEDERAL LANDS HIGHWAY DIVISION
STERLING, VIRGINIA

CHESAPEAKE & OHIO CANAL
NATIONAL HISTORICAL PARK
GREAT FALLS ENTRANCE ROAD & PARKING LOTS

EROSION CONTROL PLAN
STA. 16+50 TO 30+50

0 30 60
SCALE IN FEET

SHEET 5 OF 8

NPS NO.	REG	STATE	PROJECT	SHEET NO.
412 / 41,911	NCR	MD	PRA-CHOH 102 (1)	M6

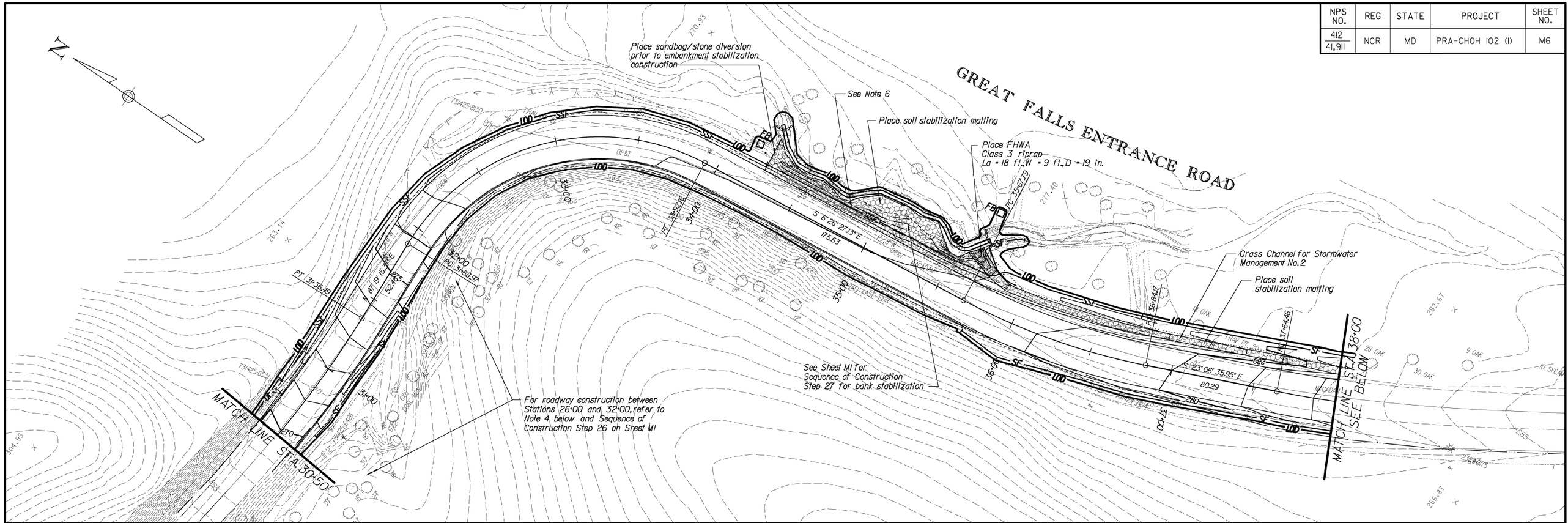

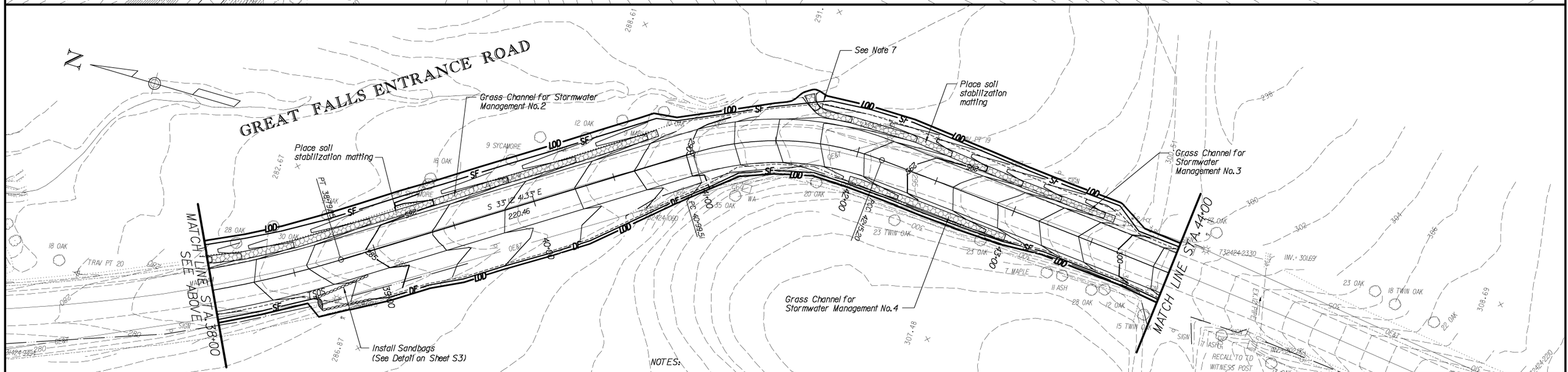

NOTES:

1. Refer to Sheet C1 for Legend.

2. The Grass Channels shall have an established stand of grass prior to the close of the project.

3. Super Silt Fence shall only be used to construct end wall and surrounding grading. Once this work has been stabilized the Super Silt Fence must be removed.

4. Disturbances in the designated area shall be stabilized by the end of the workday. No more area shall be disturbed than can be stabilized by the end of the workday. No disturbed area shall be left unstabilized overnight. The slope shall be stabilized immediately with topsoil, seed and soil stabilization matting.

5. Ditch construction shall progress from downgrade to upgrade. No more ditch shall be constructed in a single workday than can be stabilized by the end of that day. Ditches shall be stabilized with soil stabilization matting.

6. Super Silt Fence from Sta. 34+00 to 36+00, Lt. shall not be installed with perimeter controls as stated in the Sequence of Construction, Step 4 on Sheet M1. It shall be installed prior to roadway widening as stated in the Sequence of Construction, Step 28 on Sheet M1.

7. Silt Fence shown across the channel is for roadway construction. The Silt Fence must be removed prior to Grass Channel construction.

U.S. DEPARTMENT OF TRANSPORTATION
FEDERAL HIGHWAY ADMINISTRATION
EASTERN FEDERAL LANDS HIGHWAY DIVISION
STERLING, VIRGINIA

CHESAPEAKE & OHIO CANAL
NATIONAL HISTORICAL PARK
GREAT FALLS ENTRANCE ROAD & PARKING LOTS

EROSION CONTROL PLAN
STA. 30+50 TO 44+00

0 30 60
SCALE IN FEET

SHEET 6 OF 8

NPS NO.	REG	STATE	PROJECT	SHEET NO.
412 / 41,911	NCR	MD	PRA-CHOH 102 (1)	M7

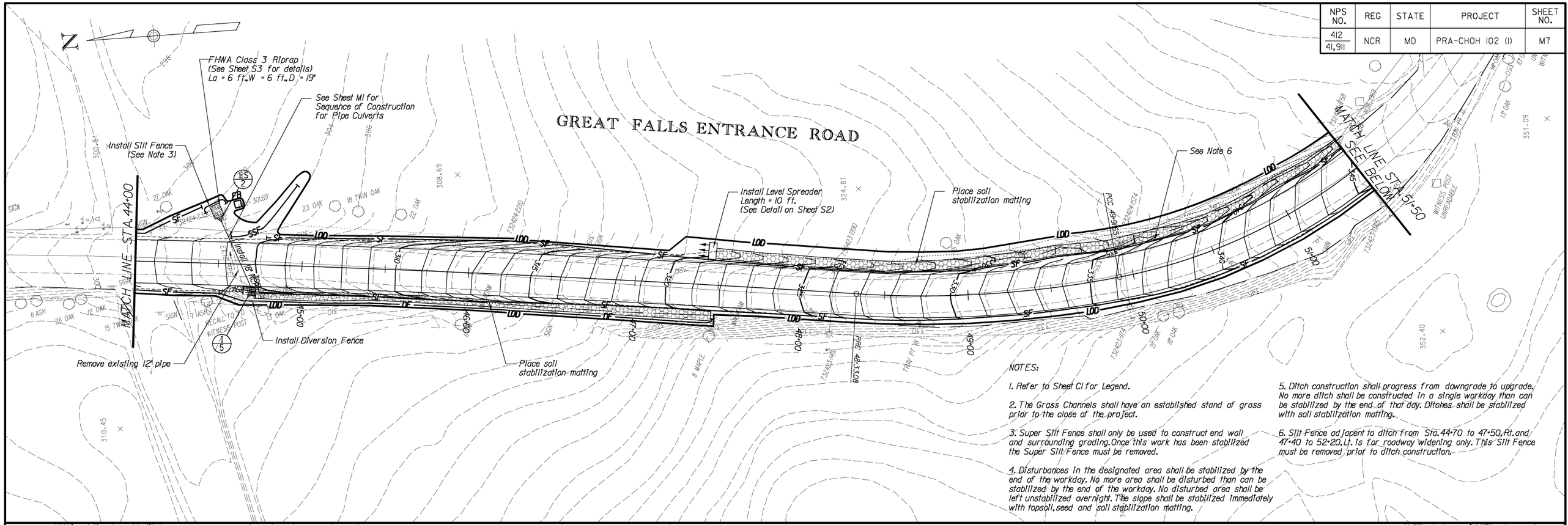

NOTES:

1. Refer to Sheet C1 for Legend.

2. The Grass Channels shall have an established stand of grass prior to the close of the project.

3. Super Silt Fence shall only be used to construct end wall and surrounding grading. Once this work has been stablized the Super Silt Fence must be removed.

4. Disturbances in the designated area shall be stabilized by the end of the workday. No more area shall be disturbed than can be stabilized by the end of the workday. No disturbed area shall be left unstabilized overnight. The slope shall be stabilized immediately with topsoil, seed and soil stabilization matting.

5. Ditch construction shall progress from downgrade to upgrade. No more ditch shall be constructed in a single workday than can be stabilized by the end of that day. Ditches shall be stabilized with soil stabilization matting.

6. Silt Fence adjacent to ditch from Sta. 44+70 to 47+50, Rt. and 47+40 to 52+20, Lt. is for roadway widening only. This Silt Fence must be removed prior to ditch construction.

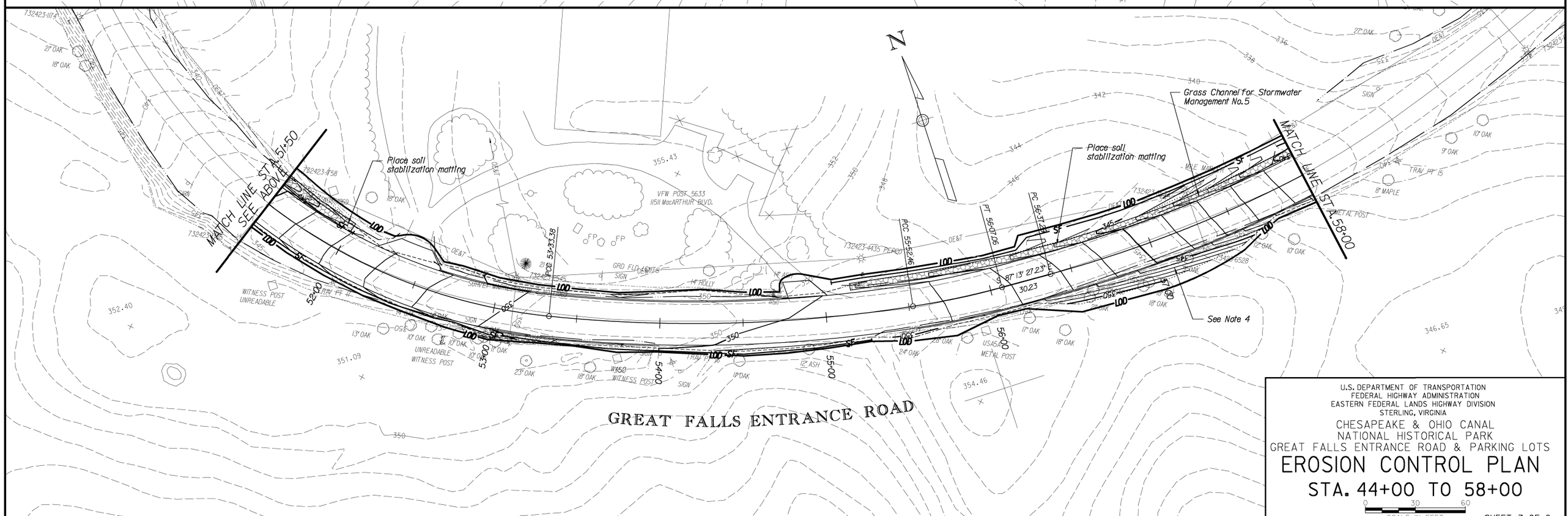

U.S. DEPARTMENT OF TRANSPORTATION
FEDERAL HIGHWAY ADMINISTRATION
EASTERN FEDERAL LANDS HIGHWAY DIVISION
STERLING, VIRGINIA

CHESAPEAKE & OHIO CANAL
NATIONAL HISTORICAL PARK
GREAT FALLS ENTRANCE ROAD & PARKING LOTS

EROSION CONTROL PLAN

STA. 44+00 TO 58+00

0 30 60
SCALE IN FEET

SHEET 7 OF 8

NPS NO.	REG	STATE	PROJECT	SHEET NO.
412 / 41,911	NCR	MD	PRA-CHOH 102 (1)	M8

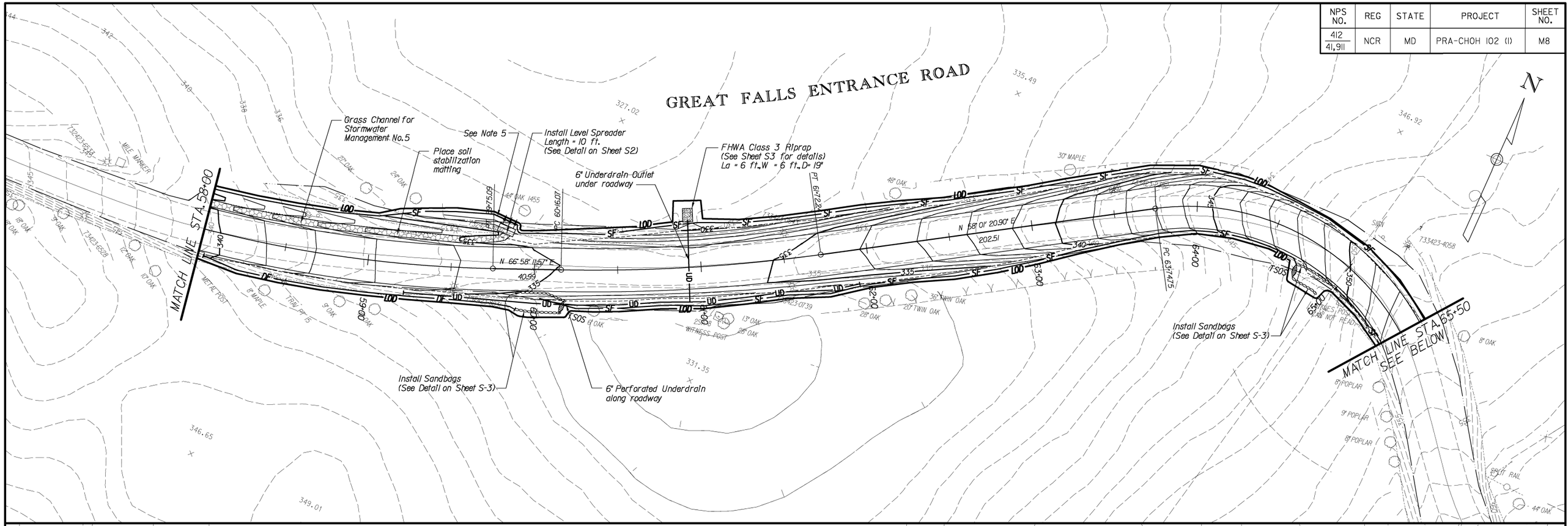

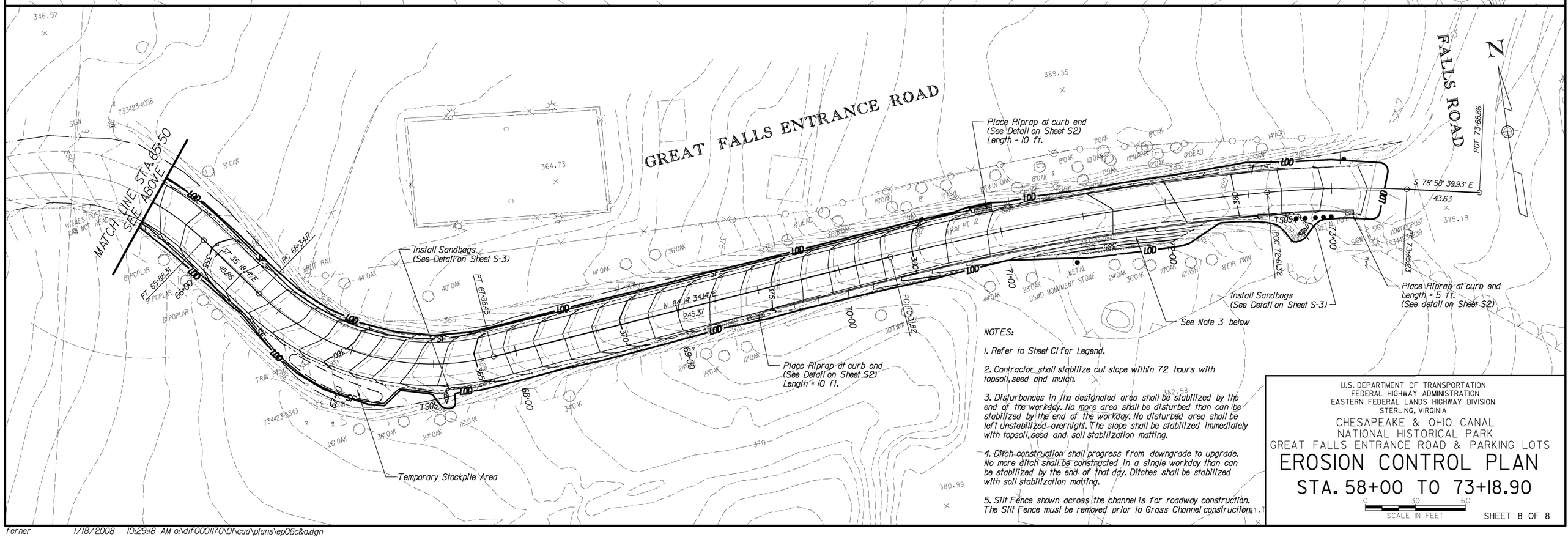

NOTES:

1. Refer to Sheet C1 for Legend.

2. Contractor shall stabilize cut slope within 72 hours with topsoil, seed and mulch.

3. Disturbances in the designated area shall be stabilized by the end of the workday. No more area shall be disturbed than can be stabilized by the end of the workday. No disturbed area shall be left unstabilized overnight. The slope shall be stabilized immediately with topsoil, seed and soil stabilization matting.

4. Ditch construction shall progress from downgrade to upgrade. No more ditch shall be constructed in a single workday than can be stabilized by the end of that day. Ditches shall be stabilized with soil stabilization matting.

5. Silt Fence shown across the channel is for roadway construction. The Silt Fence must be removed prior to Grass Channel construction.

U.S. DEPARTMENT OF TRANSPORTATION
FEDERAL HIGHWAY ADMINISTRATION
EASTERN FEDERAL LANDS HIGHWAY DIVISION
STERLING, VIRGINIA

CHESAPEAKE & OHIO CANAL NATIONAL HISTORICAL PARK

GREAT FALLS ENTRANCE ROAD & PARKING LOTS

EROSION CONTROL PLAN

STA. 58+00 TO 73+18.90

0 30 60
SCALE IN FEET

SHEET 8 OF 8

NPS NO.	REG	STATE	PROJECT	SHEET NO.
412 / 41,911	NCR	MD	PRA-CHOH 102 (1)	N1

GENERAL NOTES

1. ALL TRAFFIC CONTROL SIGNS AND DEVICES MUST ADHERE TO THE CURRENT EDITION OF THE MANUAL ON UNIFORM TRAFFIC CONTROL DEVICES (MUTCD).
2. THE CO SHALL APPROVE FINAL LOCATION AND SPACING OF SIGNS AND TRAFFIC CONTROL DEVICES.
3. COVER OR REMOVE ALL CONFLICTING SIGNS, AND REMOVE ALL CONFLICTING STRIPING FOR EACH PHASE AND STAGE, AS DIRECTED BY THE CO.
4. UTILIZE THE FLAGGING OPERATION DURING LANE CLOSURES. OR AS APPROVED BY THE CO.
5. COORDINATE TEMPORARY SIGNING AND TRAFFIC CONTROL DEVICES AS NEEDED WITH ALL OTHER CONTRACTORS WORKING WITHIN THE PROJECT LIMITS, AND MAKE ADJUSTMENTS AS NECESSARY.
6. ALL TEMPORARY LANES SHALL BE A MINIMUM OF 10 FEET WIDE, UNLESS NOTED OTHERWISE.
7. THE CONSTRUCTION DROP OFF SHALL BE PROTECTED DURING NON-WORKING HOURS WITH TEMPORARY WEDGE MATERIAL INSTALLED AT A 6:1 SLOPE OR FLATTER.
8. THE CONTRACTOR SHALL USE STAGED CONSTRUCTION TO COMPLETE THE CONSTRUCTION OF THE ENTRANCE ROAD. THE CONTRACTOR SHALL ONLY SET UP A WORK ZONE IN ONE SECTION AT A TIME. THE LIMIT OF A WORK ZONE MAY VARY, BUT SHALL NOT EXCEED THE LIMITS OF WORK THAT CAN BE ACCOMPLISHED IN ONE WORK DAY.
9. AT THE COMPLETION OF ONE WORK ZONE SECTION, THE CONTRACTOR SHALL BEGIN THE STAGING OF THE NEXT WORK ZONE.
10. FOR TYPICAL APPLICATION AND CONSTRUCTION OF THE TYPE III BARRICADE REFER TO THE "MANUAL ON UNIFORM TRAFFIC CONTROL DEVICES FOR STREET AND HIGHWAYS, 2003 EDITION".

SUGGESTED SEQUENCE OF TRAFFIC CONTROL ACTIVITIES FOR MAINTENANCE OF TRAFFIC DURING CONSTRUCTION

DUCTBANK INSTALLATION

PHASE 1

1. INSTALL THE TEMPORARY TRAFFIC SIGNS AND TRAFFIC CONTROL DEVICES. SEE STANDARD DETAIL E636-B FOR INSTALLATION OF THE DUCTBANK AND MANHOLES. THE CONTRACTOR WILL ONLY INSTALL THE LENGTH OF CONDUIT THAT CAN BE BACKFILLED TO FINISHED GRADE WITH AGGREGATE BASE IN ONE WORK DAY.
2. ROUGH GRADE SIDE OF ROADWAY ON WHICH CONDUIT IS BEING PLACED AND STABILIZE IMMEDIATELY.

ENTRANCE ROAD WIDENING

1. INSTALL THE TEMPORARY TRAFFIC SIGNS AND TRAFFIC CONTROL DEVICES. SEE STANDARD DETAIL E636-6 FOR THE CONSTRUCTION OF THE WIDENING. THE CONTRACTOR WILL WORK ON ONE SIDE OF THE ROADWAY AT ONE TIME AND MAINTAIN ONE LANE OF TRAFFIC DURING WORKING HOURS USING THE FLAGGING OPERATION. THE CONTRACTOR WILL REMOVE OR SHIFT THE TRAFFIC CONTROL DEVICES OFF THE ROAD DURING NON-WORKING HOURS TO ALLOW FOR TWO LANES OF TRAFFIC.
2. THE WORK MAY PROGRESS CONCURRENTLY WITH THE UTILITY DUCTBANK INSTALLATION AS LONG AS TWO LANES ARE OPEN TO TRAFFIC AT THE END OF THE WORKDAY AND DURING NON-WORKING HOURS.
3. REFER TO SHEETS N6 & N7 FOR THE SEQUENCING OF WORK BETWEEN STATION 25+00 AND 32+00 ALONG GREAT FALLS ENTRANCE ROAD.

UPPER PARKING LOT & ROTARY

1. INSTALL FENCING AROUND THE AREA DESIGNATED AS THE CONTRACTOR STAGING AREA. THE LOCATION OF A LOCK-ABLE GATE WILL BE DETERMINED BY THE CONTRACTOR AND APPROVED BY THE CO. DRUMS WILL BE USED AS SHOWN ON SHEET N4 TO PROTECT THE WORK ZONES. A 15 FOOT MINIMUM ACCESS WILL BE MAINTAINED ADJACENT TO THE STAGING AREA AS INDICATED OR AS APPROVED BY THE CO.
2. THE CONTRACTOR WILL PHASE THE CONSTRUCTION OF THE UPPER PARKING LOT AS TO NOT DISPLACE ANY MORE THAN 25% OF THE AVAILABLE PARKING SPACES AT ANY ONE TIME. THIS EQUATES TO ABOUT 125 PARKING STALLS. DISPLACED HANDICAPPED STALLS SHALL BE RELOCATED IN THE INTERIM AT A LOCATION NEAR THE CURRENT LOCATION THAT WILL BE ADA ACCESSIBLE. TEMPORARY SIGNING WILL BE PROVIDED BY THE CONTRACTOR AT THE LOCATION OF THE TEMPORARY HANDICAPPED PARKING LOCATIONS.
3. THE CONTRACTOR WILL PLACE ORANGE CONSTRUCTION FENCE AROUND THE WORK ZONES TO PREVENT PEDESTRIANS FROM TRAVELING THROUGH THE WORK ZONES.
4. MAINTAIN CIRCULAR MOVEMENT OF TRAFFIC THROUGH THE ENTIRE UPPER PARKING LOT AT ALL TIMES.

LOWER PARKING LOT

1. INSTALL ORANGE CONSTRUCTION FENCING AT THE LOCATIONS NOTED ON SHEET N5 OR AS DIRECTED BY THE CO. PEDESTRIAN MOVEMENT WILL BE LIMITED TO THE STONE PATH ADJACENT TO THE CANAL DURING CONSTRUCTION. ONCE THE NEW CONCRETE PATH IS OPERATIONAL, ORANGE CONSTRUCTION FENCE WILL REMAIN TO ALLOW FOR THE DEMOLITION OF THE GRAVEL PATH, GRADING AND FINAL STABILIZATION WITH SEED AND MULCH.
2. THE CONTRACTOR MAY INSTALL A LOCKABLE CHAIN LINK FENCE GATE AT THE LOCATION SHOWN ON SHEET N5 OR AT AN ALTERNATE LOCATION APPROVED BY THE CO.
3. THE LOWER PARKING LOT WORK AREA MAY BE USED FOR THE TEMPORARY STORAGE OF EQUIPMENT. PAVEMENT THAT IS TO BE REMOVED FROM THIS AREA WILL BE DISPOSED OFF SITE IMMEDIATELY FOLLOWING ITS REMOVAL. STOCKPILING OF NON-SALVAGEABLE MATERIAL WILL NOT BE ALLOWED.
4. APPROPRIATE SIGNING WILL BE PROVIDED BY THE CONTRACTOR TO DIRECT PEDESTRIANS TO THE TAVERN AND RESTROOMS, AND TO KEEP PARK USERS AWAY FROM THE CONSTRUCTION AREA.

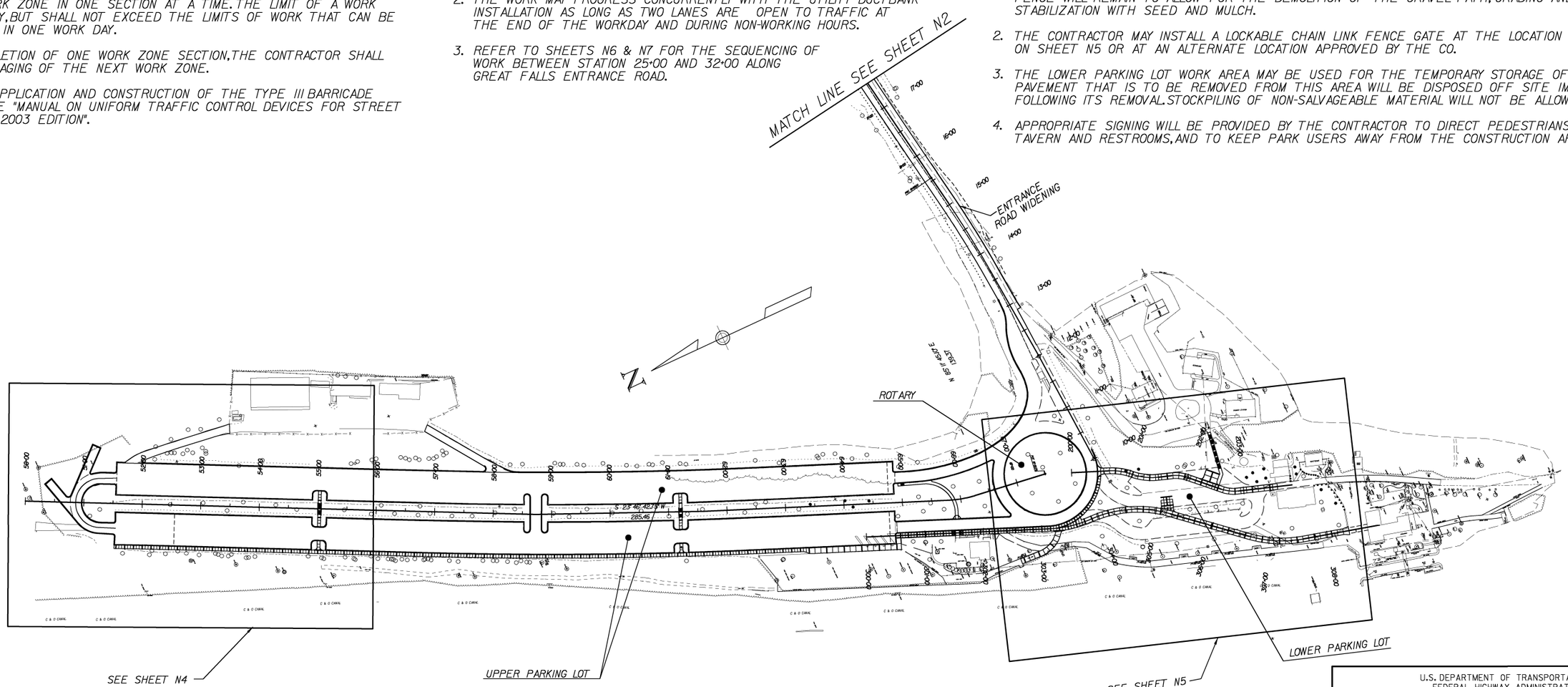

U.S. DEPARTMENT OF TRANSPORTATION
FEDERAL HIGHWAY ADMINISTRATION
EASTERN FEDERAL LANDS HIGHWAY DIVISION
STERLING, VIRGINIA

CHESAPEAKE & OHIO CANAL
NATIONAL HISTORICAL PARK
GREAT FALLS ENTRANCE ROAD & PARKING LOTS

TRAFFIC CONTROL/ PHASING PLAN

0 100 200
SCALE IN FEET

SHEET 1 OF 7

NPS NO.	REG	STATE	PROJECT	SHEET NO.
412 / 41,911	NCR	MD	PRA-CHOH 102 (1)	N2

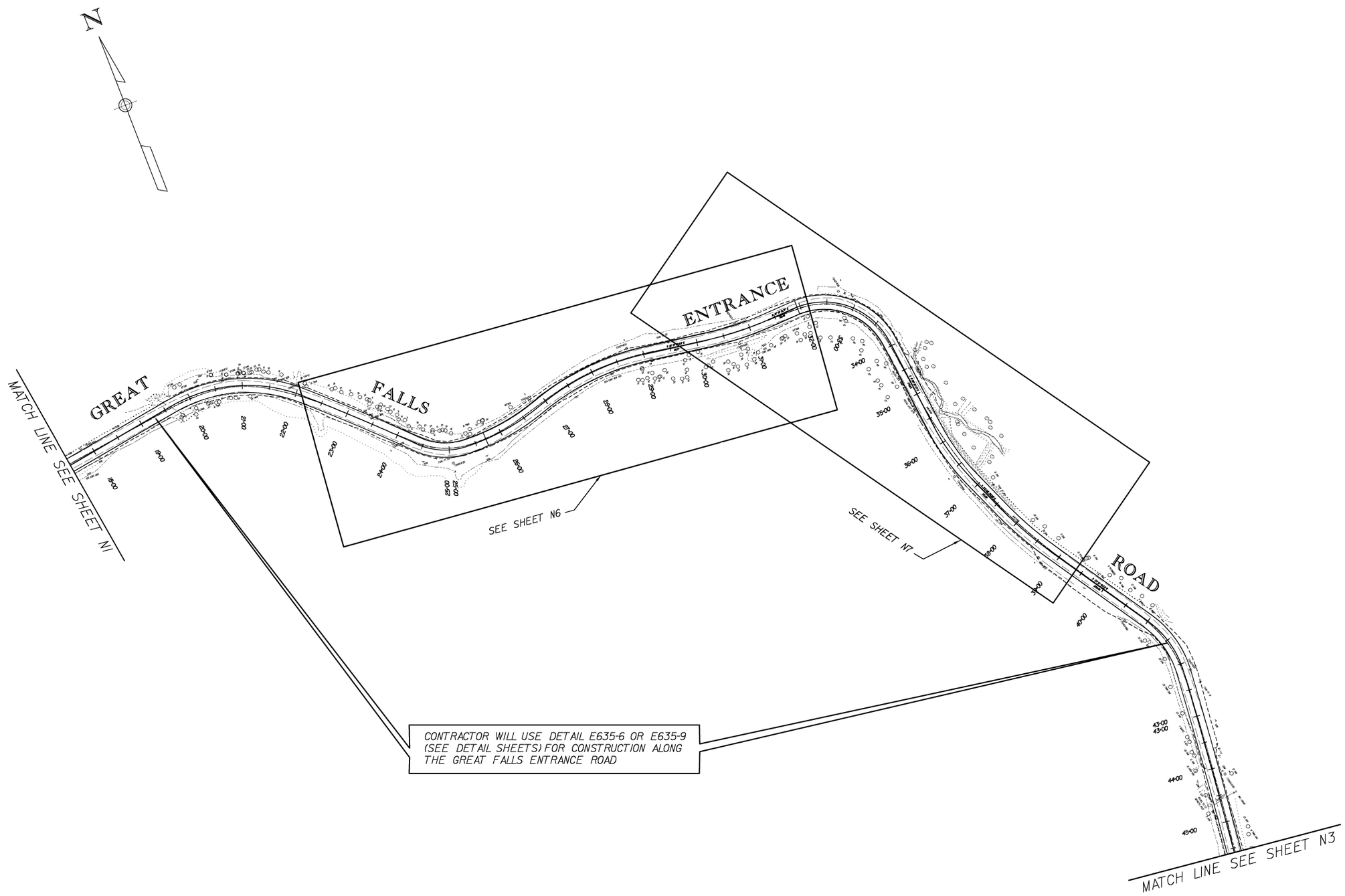

U.S. DEPARTMENT OF TRANSPORTATION
FEDERAL HIGHWAY ADMINISTRATION
EASTERN FEDERAL LANDS HIGHWAY DIVISION
STERLING, VIRGINIA

CHESAPEAKE & OHIO CANAL
NATIONAL HISTORICAL PARK
GREAT FALLS ENTRANCE ROAD & PARKING LOTS

TRAFFIC CONTROL/ PHASING PLAN

0 100 200
SCALE IN FEET

SHEET 2 OF 7

NPS NO.	REG	STATE	PROJECT	SHEET NO.
412 / 41,911	NCR	MD	PRA-CHOH 102 (1)	N3

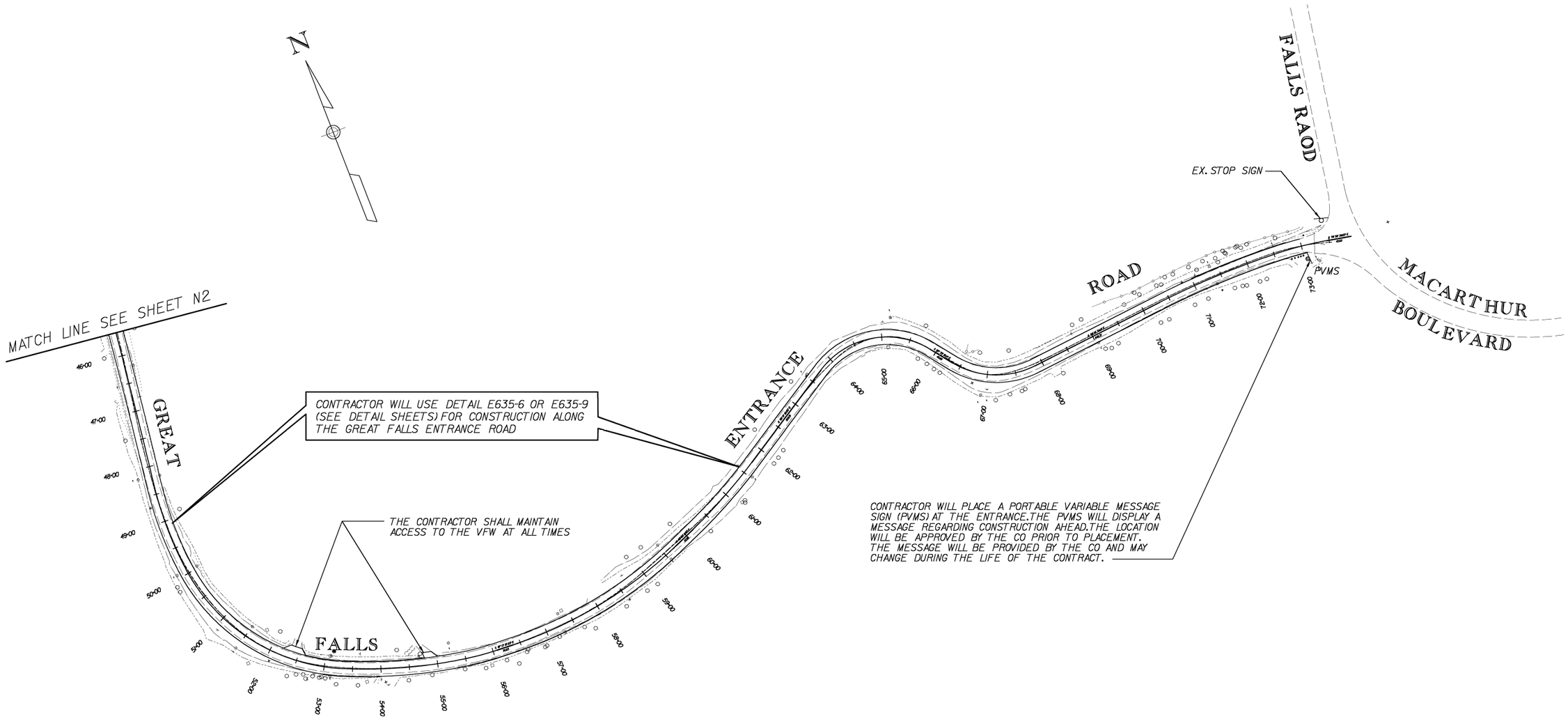

U.S. DEPARTMENT OF TRANSPORTATION
FEDERAL HIGHWAY ADMINISTRATION
EASTERN FEDERAL LANDS HIGHWAY DIVISION
STERLING, VIRGINIA

CHESAPEAKE & OHIO CANAL
NATIONAL HISTORICAL PARK
GREAT FALLS ENTRANCE ROAD & PARKING LOTS

TRAFFIC CONTROL/ PHASING PLAN

0 100 200
SCALE IN FEET

SHEET 3 OF 7

NPS NO.	REG	STATE	PROJECT	SHEET NO.
412 / 41,911	NCR	MD	PRA-CHOH 102 (1)	N4

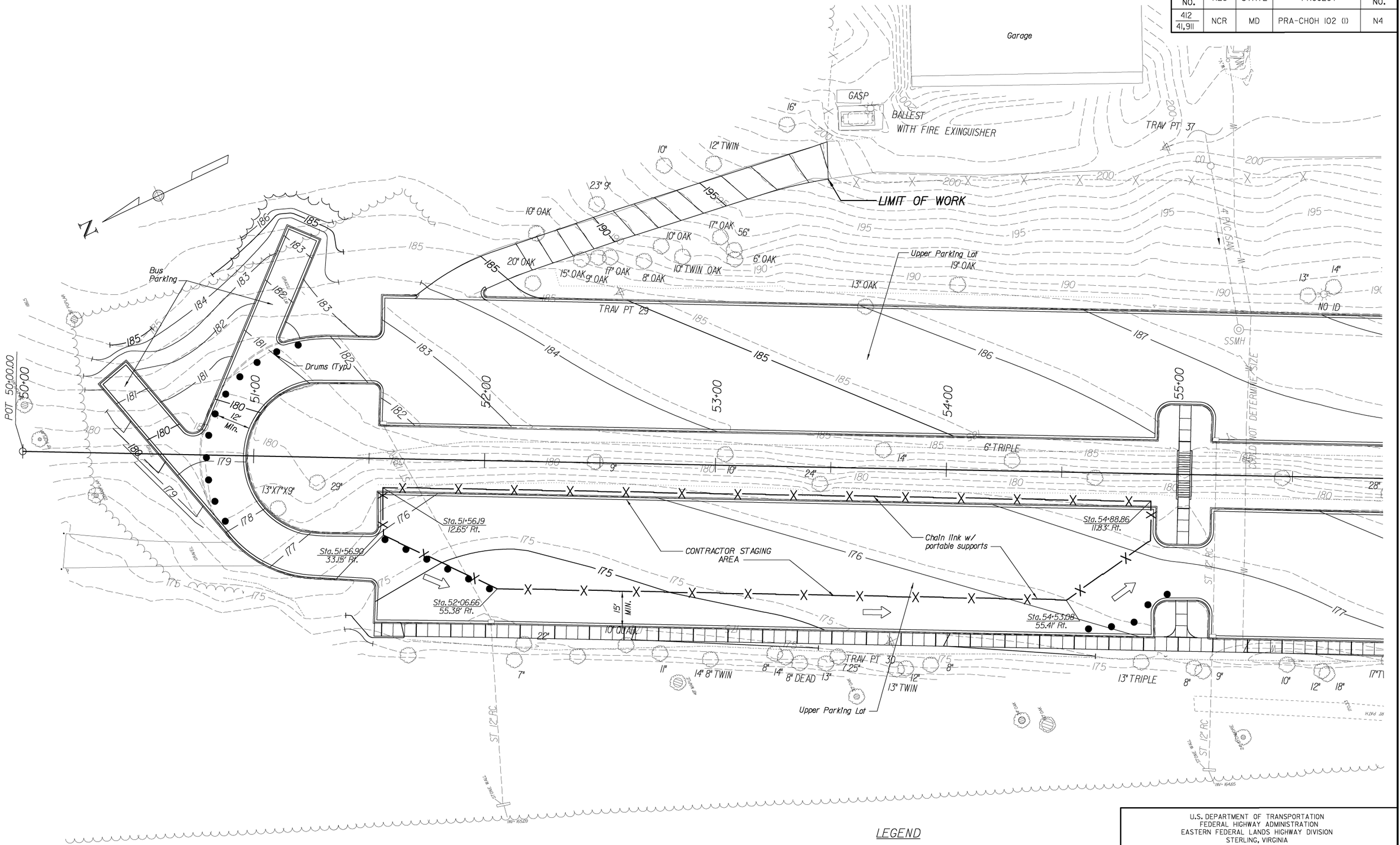

LEGEND

- ● Drum
- —— OCF —— Orange Construction Fence
- ——X—— Temporary Chain Link Fence

U.S. DEPARTMENT OF TRANSPORTATION
FEDERAL HIGHWAY ADMINISTRATION
EASTERN FEDERAL LANDS HIGHWAY DIVISION
STERLING, VIRGINIA

CHESAPEAKE & OHIO CANAL
NATIONAL HISTORICAL PARK
GREAT FALLS ENTRANCE ROAD & PARKING LOTS

TRAFFIC CONTROL/ PHASING PLAN

0 20 40
SCALE IN FEET

SHEET 4 OF 7

ferner 9/20/2007 8:57:14 AM o:\dlf000117001\cad\plans\tp04c&o.dgn

NPS NO.	REG	STATE	PROJECT	SHEET NO.
412 / 41,911	NCR	MD	PRA-CHOH 102 (1)	N5

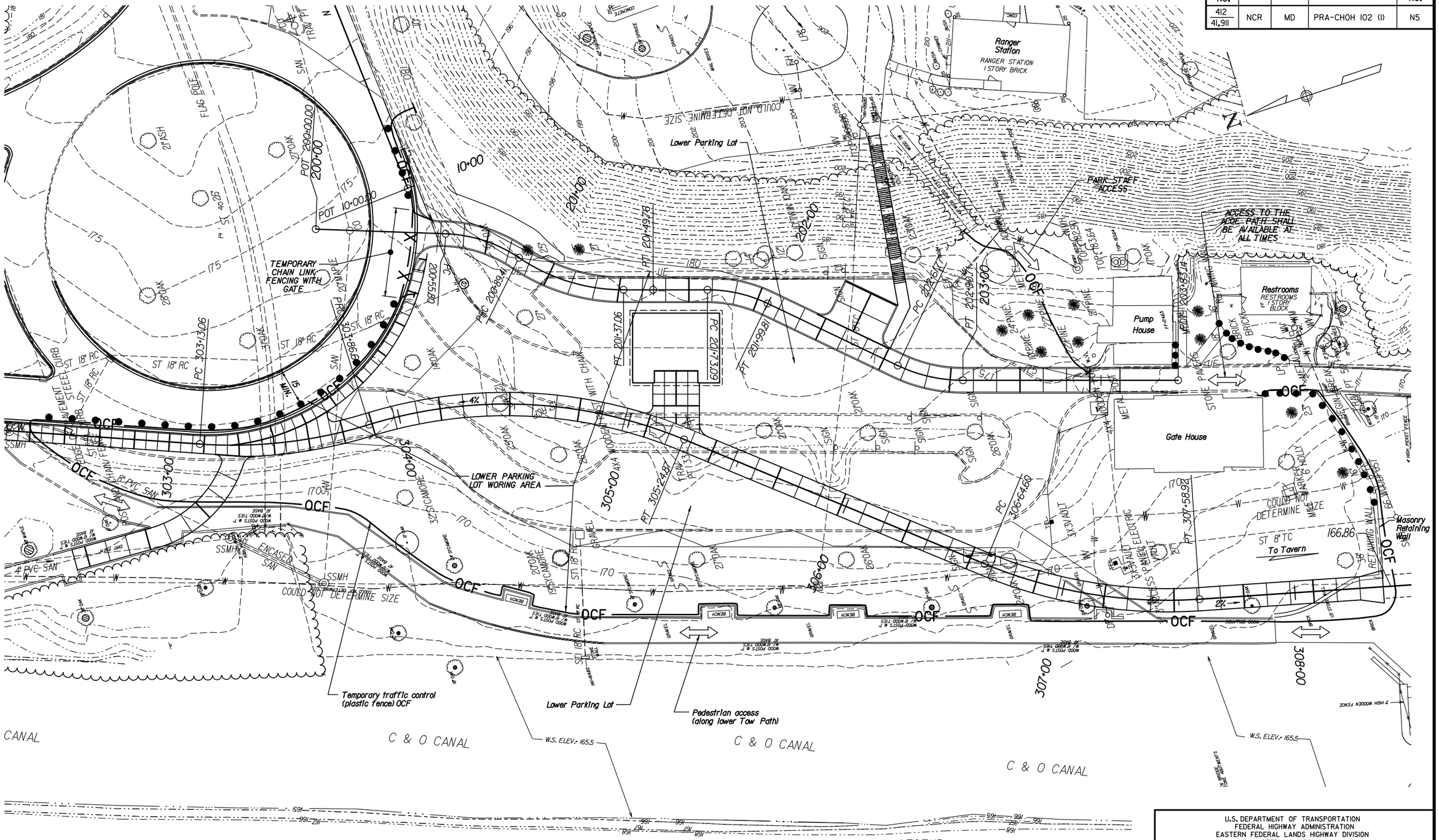

LEGEND

- ● Drum
- —OCF— Orange Construction Fence
- —X— Temporary Chain Link Fence

U.S. DEPARTMENT OF TRANSPORTATION
FEDERAL HIGHWAY ADMINISTRATION
EASTERN FEDERAL LANDS HIGHWAY DIVISION
STERLING, VIRGINIA

CHESAPEAKE & OHIO CANAL
NATIONAL HISTORICAL PARK
GREAT FALLS ENTRANCE ROAD & PARKING LOTS

TRAFFIC CONTROL/ PHASING PLAN

0 20 40
SCALE IN FEET

SHEET 5 OF 7

$USER$ $DATE$ 11:06:04 AM $FILE$

NPS NO.	REG	STATE	PROJECT	SHEET NO.
412 / 41,911	NCR	MD	PRA-CHOH 102 (1)	N6

Note:
Two lanes of traffic along entrance road will be traversable at the end of each day's construction activities

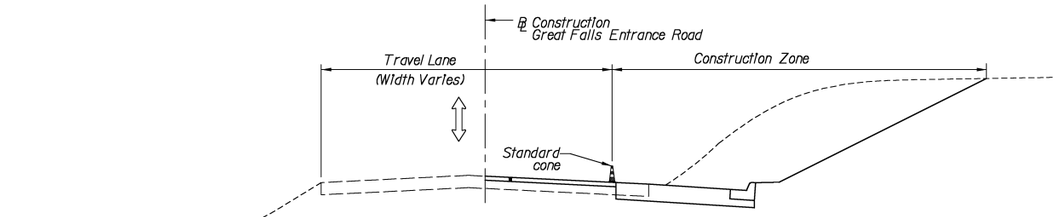

PHASE 1 WIDENING - GREAT FALLS ENTRANCE ROAD TYPICAL SECTION 'A'
ONE LANE - TWO WAY WITH FLAGGING

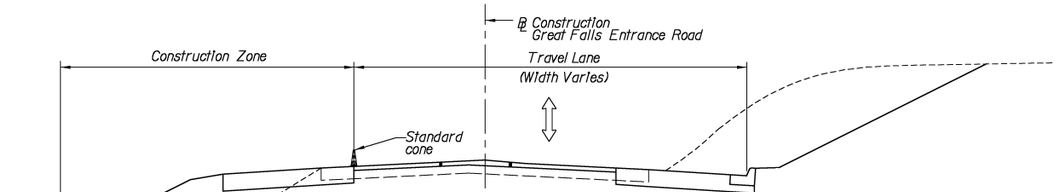

PHASE 2 WIDENING - GREAT FALLS ENTRANCE ROAD TYPICAL SECTION 'A'
ONE LANE - TWO WAY WITH FLAGGING

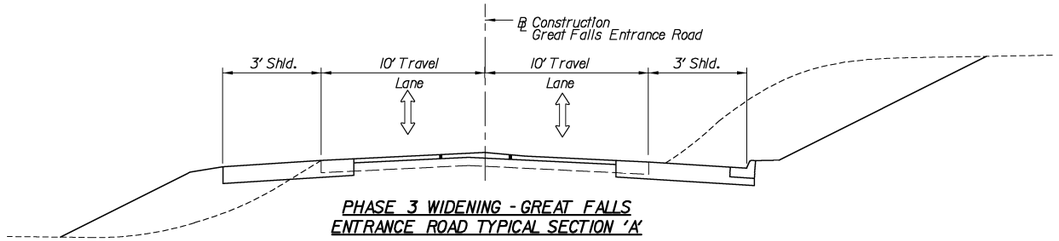

PHASE 3 WIDENING - GREAT FALLS ENTRANCE ROAD TYPICAL SECTION 'A'
ONE LANE - TWO WAY WITH FLAGGING

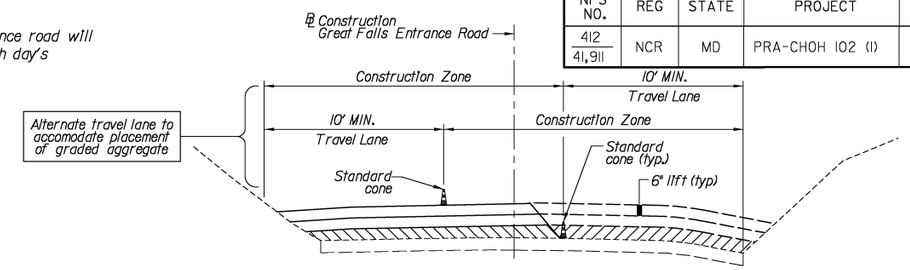

PHASE 1 RECONSTRUCTION - GREAT FALLS ENTRANCE ROAD TYPICAL SECTION 'B'
ONE LANE - TWO WAY WITH FLAGGING
STA.25+00 TO 32+00

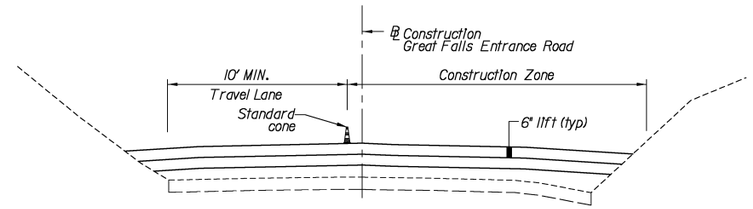

PHASE 2 RECONSTRUCTION - GREAT FALLS ENTRANCE ROAD TYPICAL SECTION 'B'
ONE LANE - TWO WAY WITH FLAGGING
STA.25+00 TO 32+00

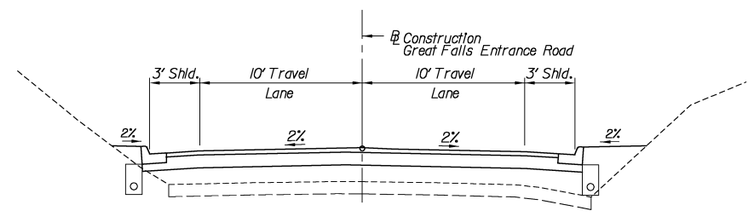

PHASE 3 RECONSTRUCTION - GREAT FALLS ENTRANCE ROAD TYPICAL SECTION 'B'
ONE LANE - TWO WAY WITH FLAGGING
STA.25+00 TO 32+00

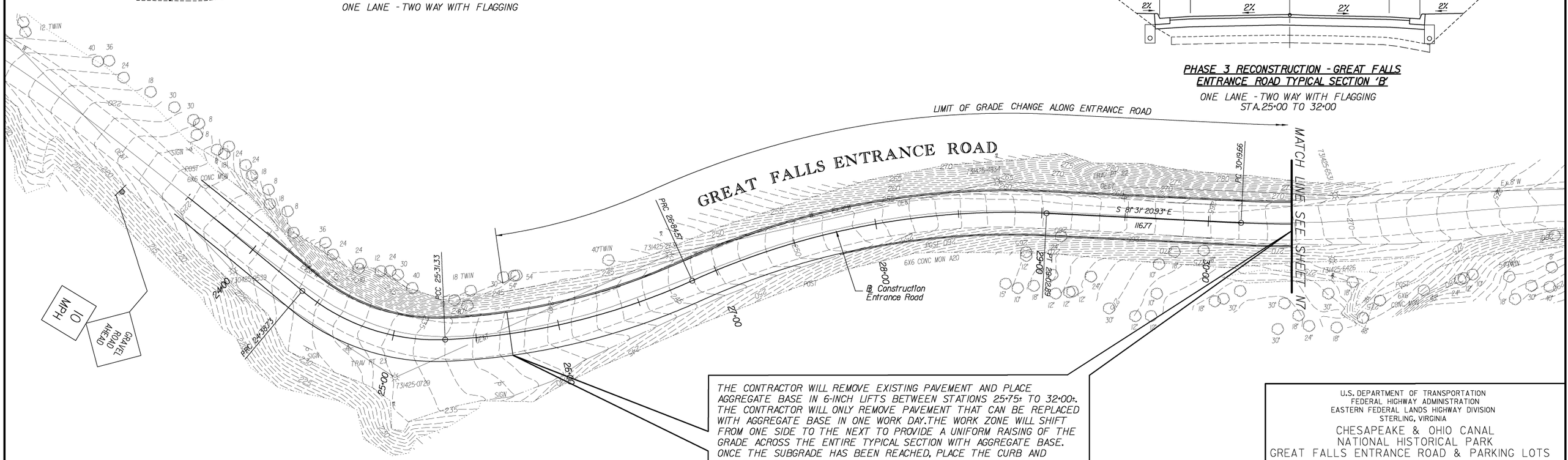

THE CONTRACTOR WILL REMOVE EXISTING PAVEMENT AND PLACE AGGREGATE BASE IN 6-INCH LIFTS BETWEEN STATIONS 25+75± TO 32+00±. THE CONTRACTOR WILL ONLY REMOVE PAVEMENT THAT CAN BE REPLACED WITH AGGREGATE BASE IN ONE WORK DAY.THE WORK ZONE WILL SHIFT FROM ONE SIDE TO THE NEXT TO PROVIDE A UNIFORM RAISING OF THE GRADE ACROSS THE ENTIRE TYPICAL SECTION WITH AGGREGATE BASE. ONCE THE SUBGRADE HAS BEEN REACHED, PLACE THE CURB AND GUTTER AND HOT MIX ASPHALT TO THE FINISHED GRADE NOTED ON SHEET L2. PAVEMENT DROP OFFS EXCEEDING 4 INCHES WILL BE PROVIDED WITH A WEDGE OF AGGREGATE BASE AT A SLOPE OF 6:1. AT NO TIME WILL A GRADE DIFFERENCE EXCEED 6-INCHES.

U.S. DEPARTMENT OF TRANSPORTATION
FEDERAL HIGHWAY ADMINISTRATION
EASTERN FEDERAL LANDS HIGHWAY DIVISION
STERLING, VIRGINIA

CHESAPEAKE & OHIO CANAL
NATIONAL HISTORICAL PARK
GREAT FALLS ENTRANCE ROAD & PARKING LOTS

TRAFFIC CONTROL/ PHASING PLAN

0 30 60
SCALE IN FEET

SHEET 6 OF 7

NPS NO.	REG	STATE	PROJECT	SHEET NO.
412 / 41,911	NCR	MD	PRA-CHOH 102 (1)	N7

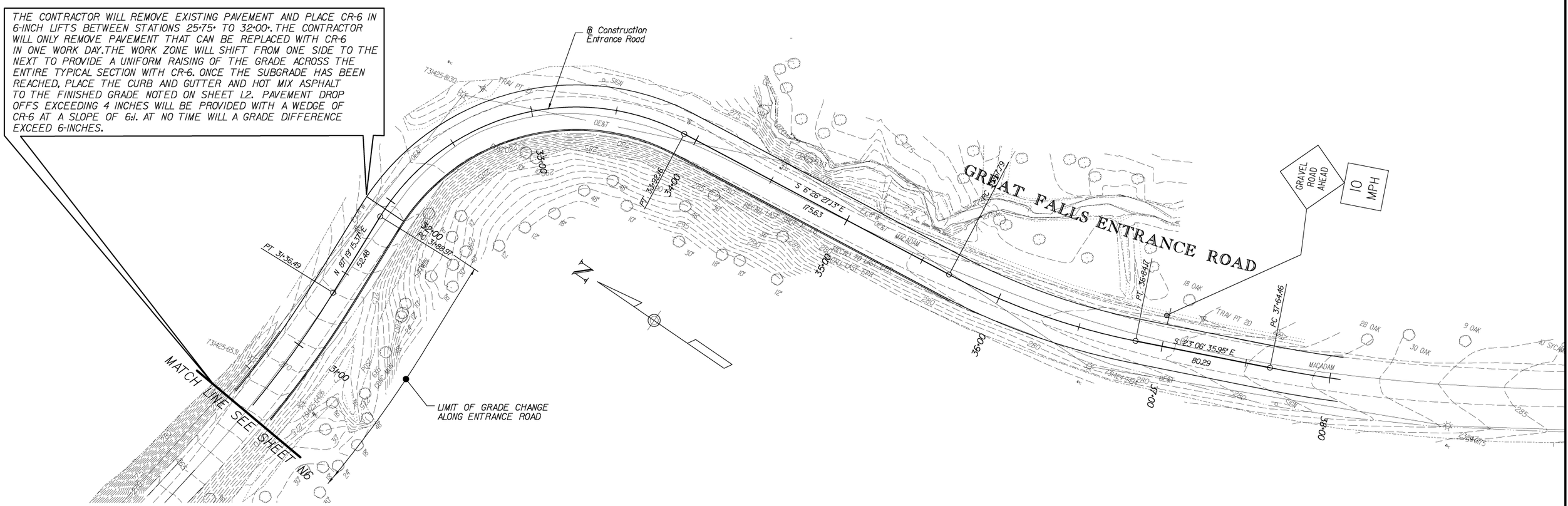

U.S. DEPARTMENT OF TRANSPORTATION
FEDERAL HIGHWAY ADMINISTRATION
EASTERN FEDERAL LANDS HIGHWAY DIVISION
STERLING, VIRGINIA

CHESAPEAKE & OHIO CANAL
NATIONAL HISTORICAL PARK
GREAT FALLS ENTRANCE ROAD & PARKING LOTS

TRAFFIC CONTROL/ PHASING PLAN

0 30 60
SCALE IN FEET

SHEET 7 OF 7

NPS NO.	REG	STATE	PROJECT	SHEET NO.
412 / 41,911	NCR	MD	PRA-CHOH 102 (1)	01

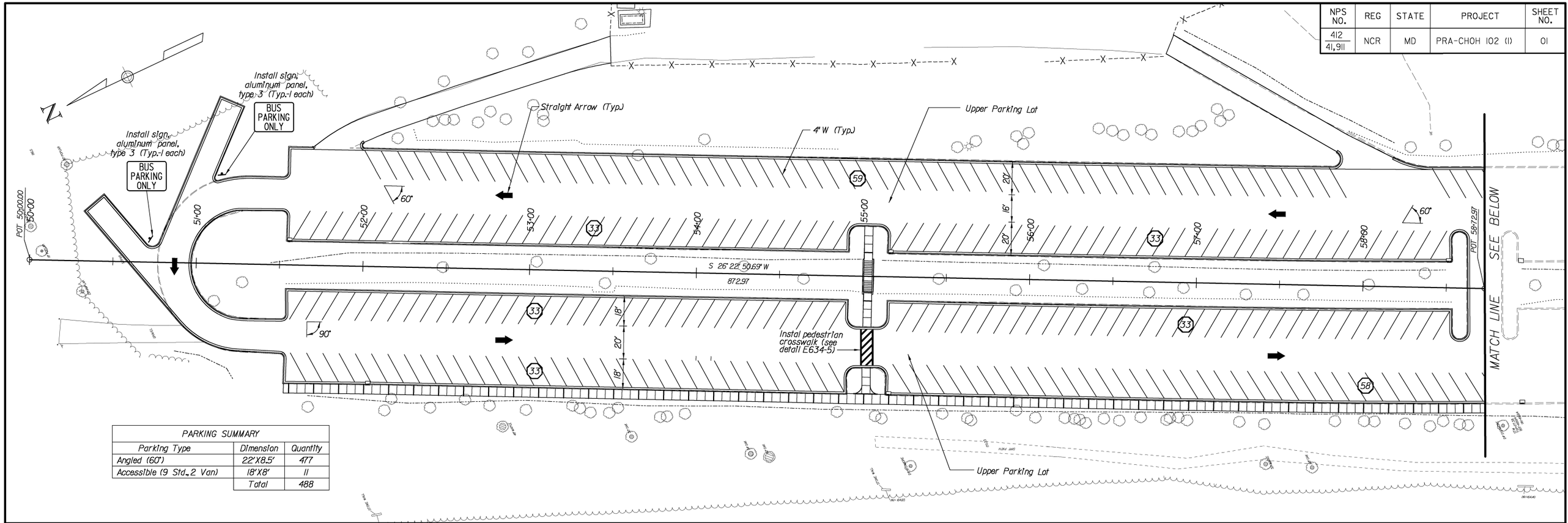

PARKING SUMMARY		
Parking Type	Dimension	Quantity
Angled (60°)	22'X8.5'	477
Accessible (9 Std., 2 Van)	18'X8'	11
	Total	488

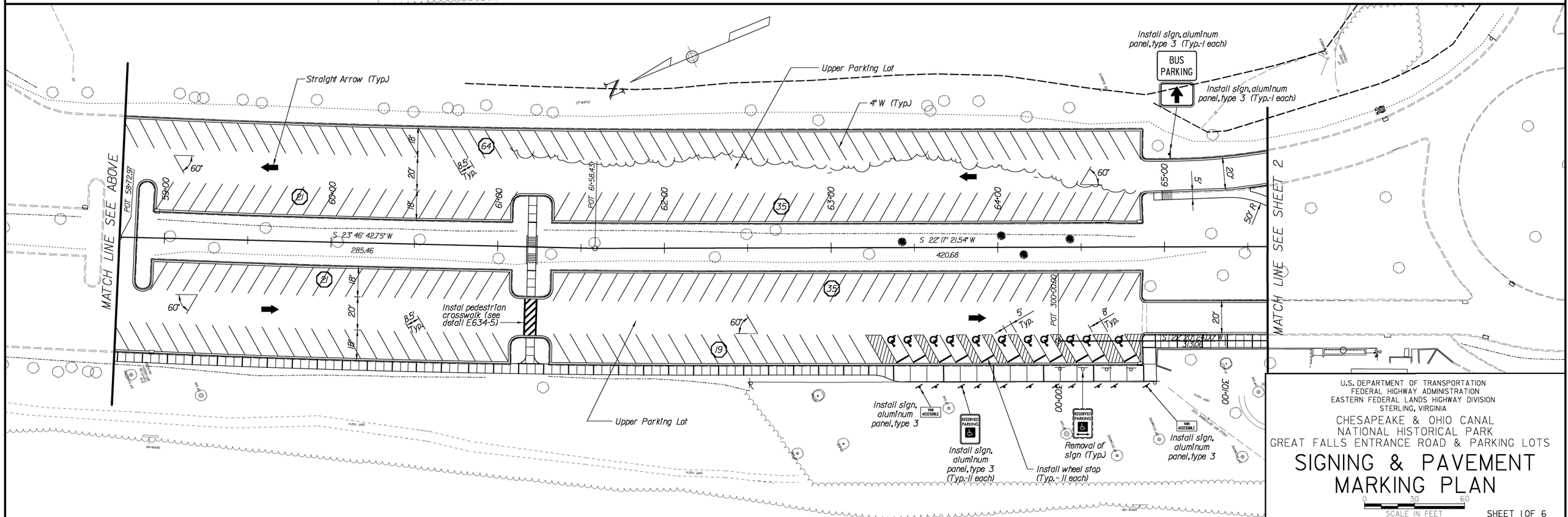

U.S. DEPARTMENT OF TRANSPORTATION
FEDERAL HIGHWAY ADMINISTRATION
EASTERN FEDERAL LANDS HIGHWAY DIVISION
STERLING, VIRGINIA

CHESAPEAKE & OHIO CANAL
NATIONAL HISTORICAL PARK
GREAT FALLS ENTRANCE ROAD & PARKING LOTS

SIGNING & PAVEMENT MARKING PLAN

0 30 60
SCALE IN FEET

SHEET 1 OF 6

NPS NO.	REG	STATE	PROJECT	SHEET NO.
412 / 41,911	NCR	MD	PRA-CHOH 102 (1)	02

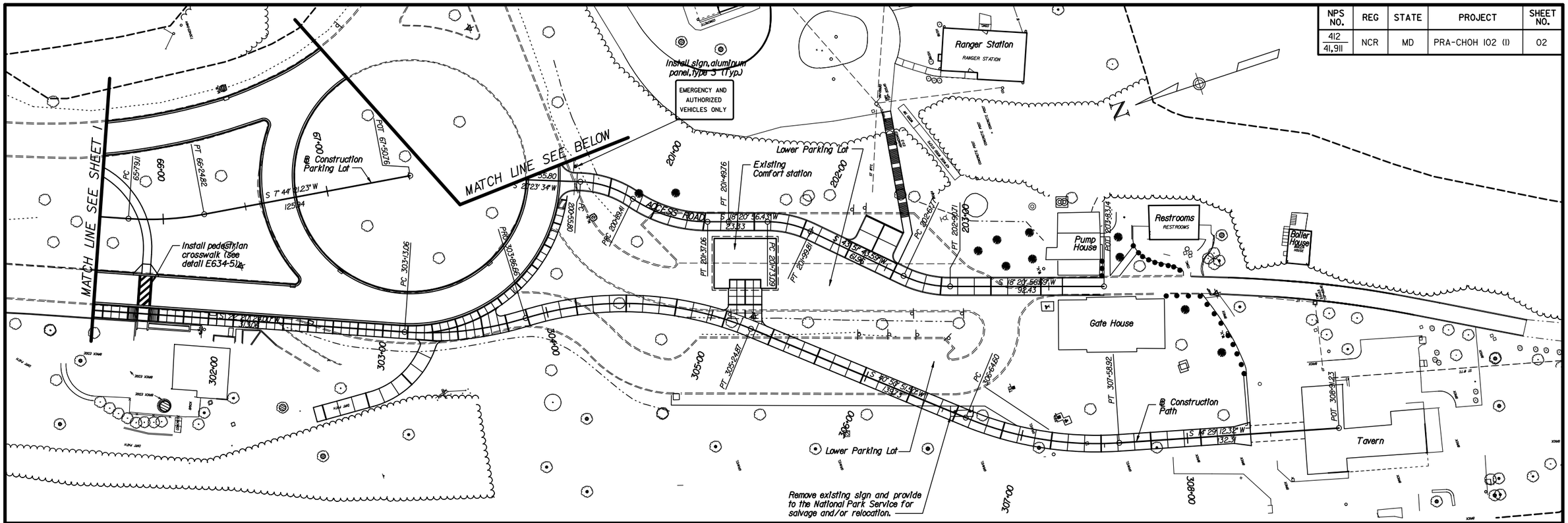

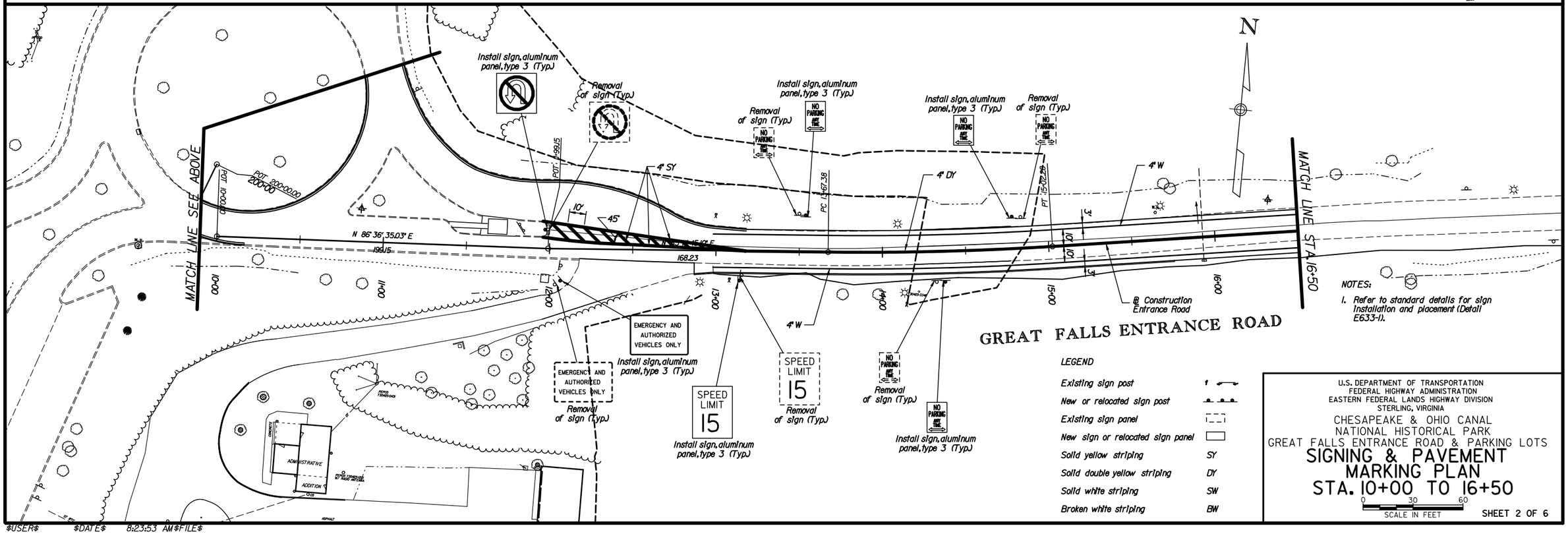

NOTES:

1. Refer to standard details for sign installation and placement (Detail E633-1).

LEGEND

Existing sign post	
New or relocated sign post	
Existing sign panel	
New sign or relocated sign panel	
Solid yellow striping	SY
Solid double yellow striping	DY
Solid white striping	SW
Broken white striping	BW

U.S. DEPARTMENT OF TRANSPORTATION
FEDERAL HIGHWAY ADMINISTRATION
EASTERN FEDERAL LANDS HIGHWAY DIVISION
STERLING, VIRGINIA

CHESAPEAKE & OHIO CANAL
NATIONAL HISTORICAL PARK
GREAT FALLS ENTRANCE ROAD & PARKING LOTS

SIGNING & PAVEMENT MARKING PLAN
STA. 10+00 TO 16+50

0 30 60
SCALE IN FEET

SHEET 2 OF 6

$USER$ $DATE$ 8:23:53 AM$FILE$

NPS NO.	REG	STATE	PROJECT	SHEET NO.
412 / 41,911	NCR	MD	PRA-CHOH 102 (1)	03

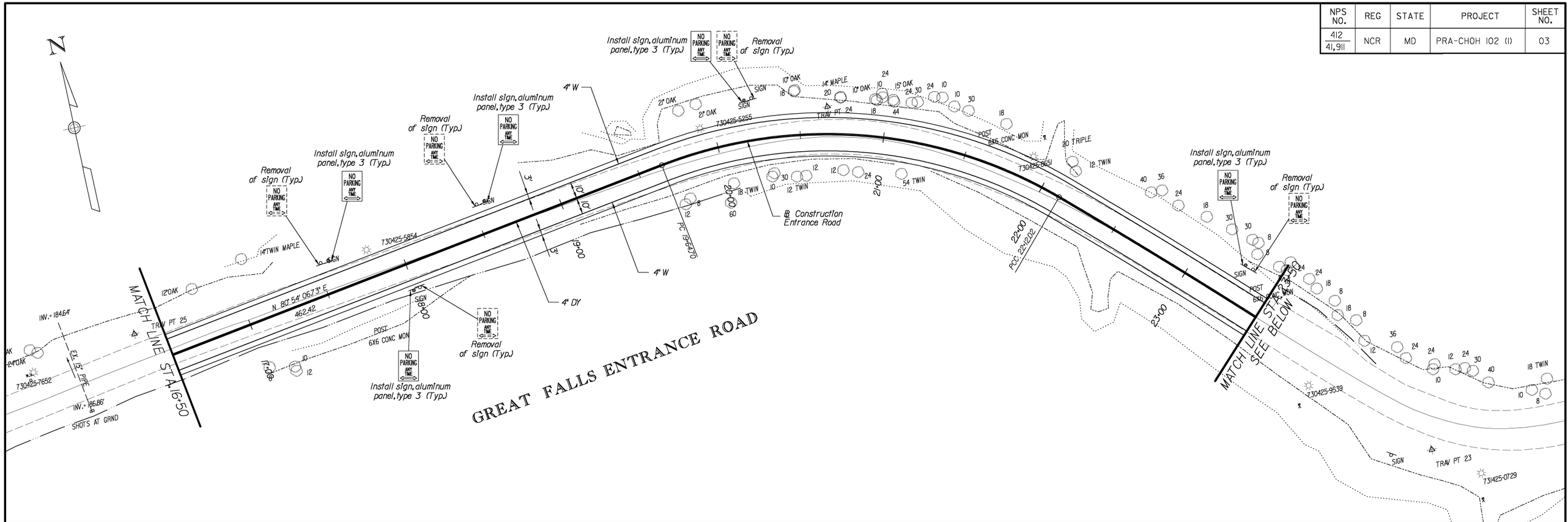

U.S. DEPARTMENT OF TRANSPORTATION
FEDERAL HIGHWAY ADMINISTRATION
EASTERN FEDERAL LANDS HIGHWAY DIVISION
STERLING, VIRGINIA

CHESAPEAKE & OHIO CANAL
NATIONAL HISTORICAL PARK
GREAT FALLS ENTRANCE ROAD & PARKING LOTS

SIGNING & PAVEMENT MARKING PLAN
STA. 16+50 TO 30+50

0 30 60
SCALE IN FEET

SHEET 3 OF 6

NPS NO.	REG	STATE	PROJECT	SHEET NO.
412 / 41,911	NCR	MD	PRA-CHOH 102 (1)	04

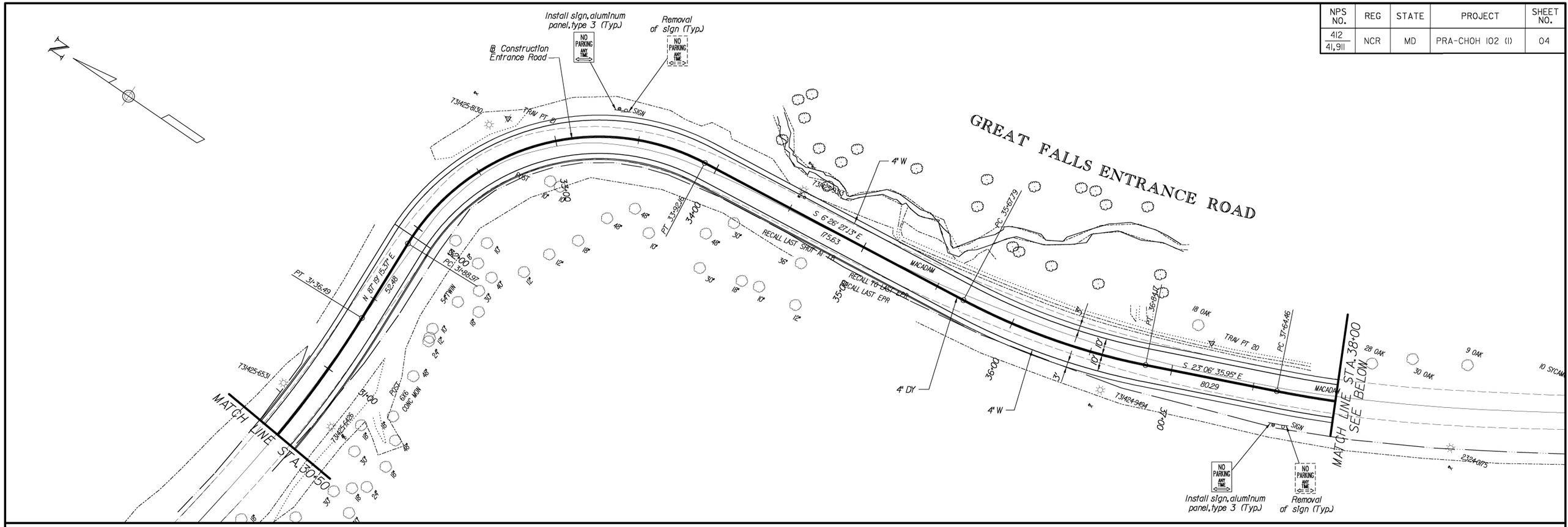

U.S. DEPARTMENT OF TRANSPORTATION
FEDERAL HIGHWAY ADMINISTRATION
EASTERN FEDERAL LANDS HIGHWAY DIVISION
STERLING, VIRGINIA

CHESAPEAKE & OHIO CANAL
NATIONAL HISTORICAL PARK
GREAT FALLS ENTRANCE ROAD & PARKING LOTS

SIGNING & PAVEMENT MARKING PLAN
STA. 30+50 TO 44+00

0 30 60
SCALE IN FEET

SHEET 4 OF 6

NPS NO.	REG	STATE	PROJECT	SHEET NO.
412 / 41,911	NCR	MD	PRA-CHOH 102 (1)	05

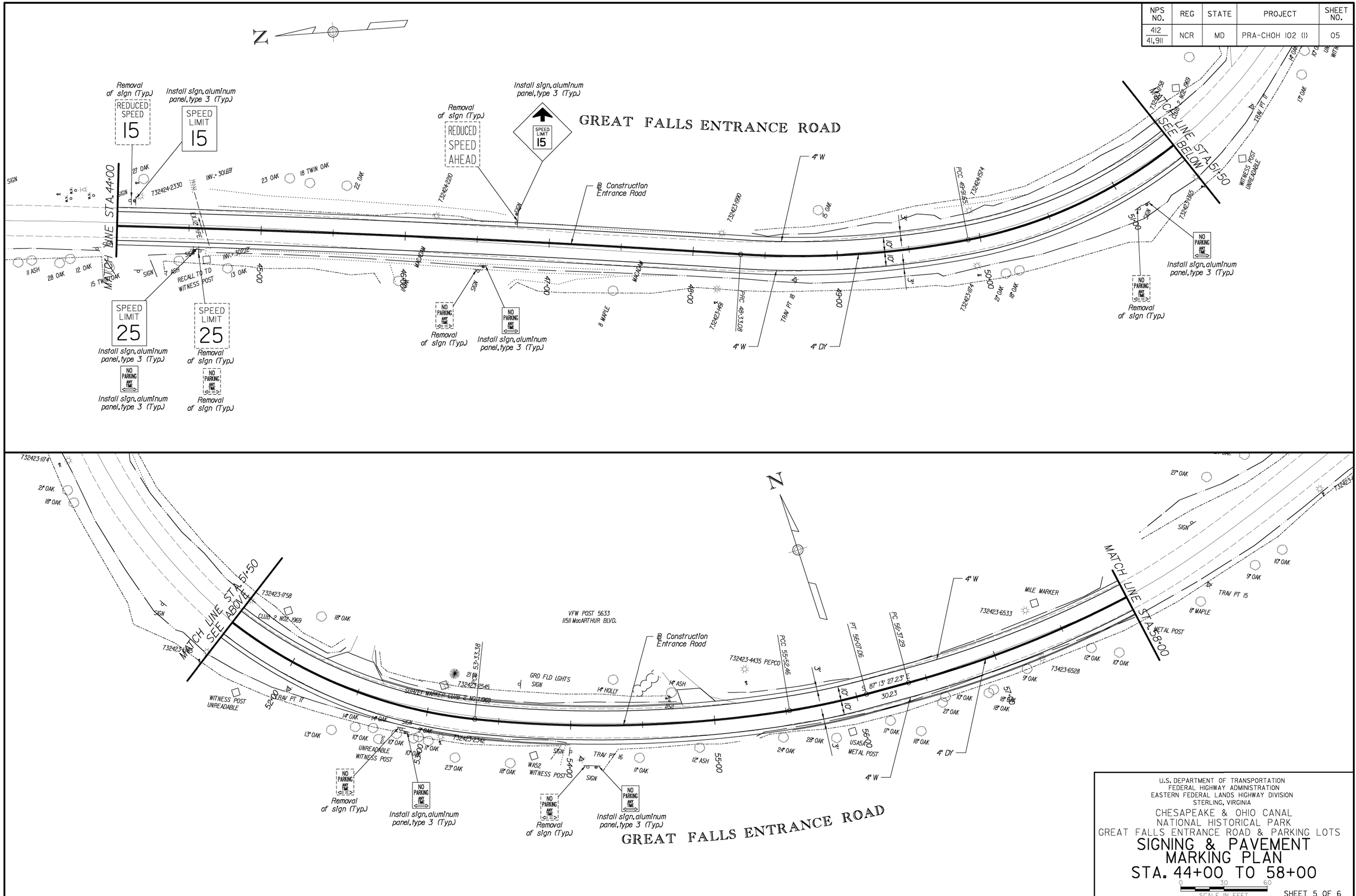

U.S. DEPARTMENT OF TRANSPORTATION
FEDERAL HIGHWAY ADMINISTRATION
EASTERN FEDERAL LANDS HIGHWAY DIVISION
STERLING, VIRGINIA

CHESAPEAKE & OHIO CANAL
NATIONAL HISTORICAL PARK
GREAT FALLS ENTRANCE ROAD & PARKING LOTS

SIGNING & PAVEMENT MARKING PLAN
STA. 44+00 TO 58+00

0 30 60
SCALE IN FEET

SHEET 5 OF 6

ferner 9/20/2007 8:57:22 AM o:\dlf000ll70\01\cad\plans\pm05c&o.dgn

NPS NO.	REG	STATE	PROJECT	SHEET NO.
412 / 41,911	NCR	MD	PRA-CHOH 102 (1)	06

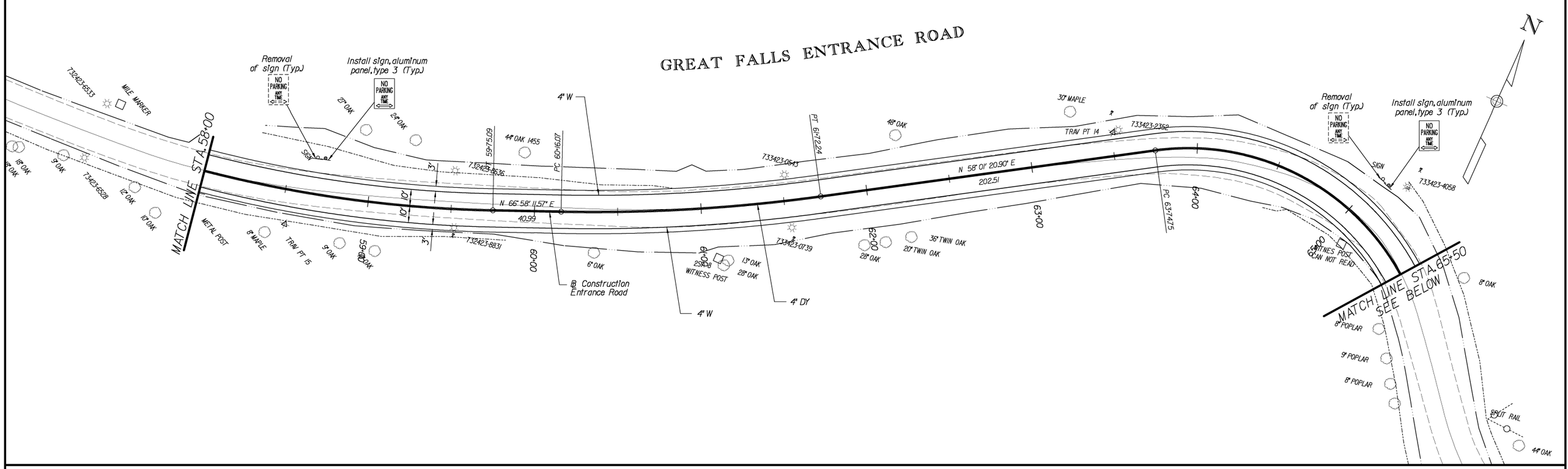

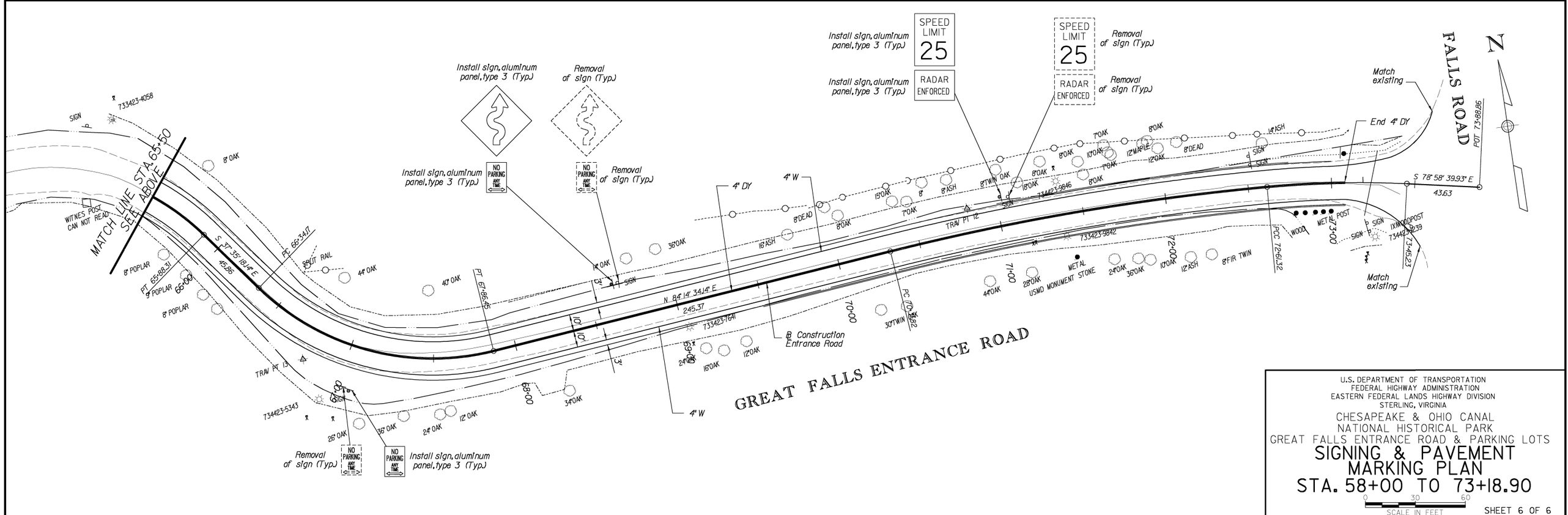

U.S. DEPARTMENT OF TRANSPORTATION
FEDERAL HIGHWAY ADMINISTRATION
EASTERN FEDERAL LANDS HIGHWAY DIVISION
STERLING, VIRGINIA

CHESAPEAKE & OHIO CANAL
NATIONAL HISTORICAL PARK
GREAT FALLS ENTRANCE ROAD & PARKING LOTS

SIGNING & PAVEMENT MARKING PLAN
STA. 58+00 TO 73+18.90

0 30 60
SCALE IN FEET

SHEET 6 OF 6

ferner 9/20/2007 8:57:23 AM o:\dlf000117001\cad\plans\pm06c&o.dgn

NPS NO.	REG	STATE	PROJECT	SHEET NO.
412 / 41,911	NCR	MD	PRA-CHOH 102 (1)	PI

Power Supply Notes:

1. Provide photocell rated at 120V and 1800VA next to existing Comfort Station photocell.
2. Panelboard CS1 supply proposed stairway lighting with 2-#10 and 1-#10 ground in 1" conduit from spare 20A circuit breaker. Route circuit throught new photocell.
3. 1" direct buried PVC conduit with 2-#10 and 1-#10 ground. Conduit shall be buried 24" below finished grade.

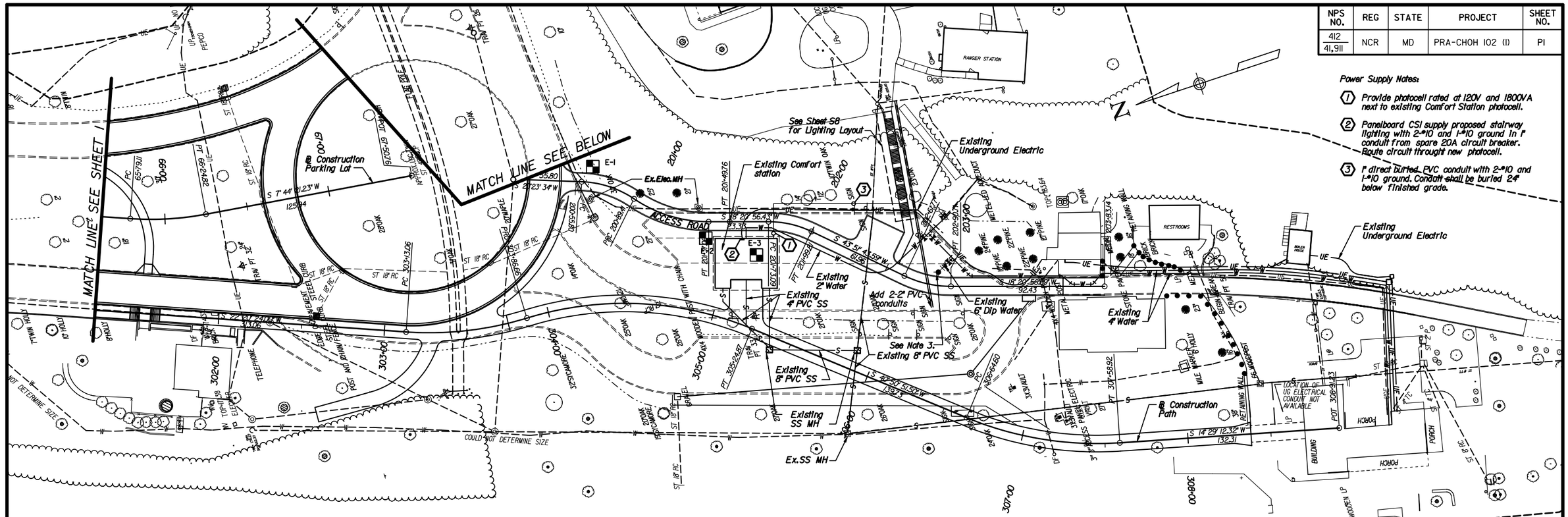

UTILITY TEST HOLE SUMMARY				
Test Hole	North	East	Cover	Utility
W-1	486,177.980	1,241,721.964	5.4	8" Water
W-2	485,898.410	1,241,666.128	4.7	8" Water
E-1	486,146.485	1,242,103.992	2.6	3 - 1" Electric
E-2	486,095.499	1,242,041.828	3.2	3 - 1" Electric
E-3	486,069.765	1,242,022.581	3.0	3 - 1" Electric

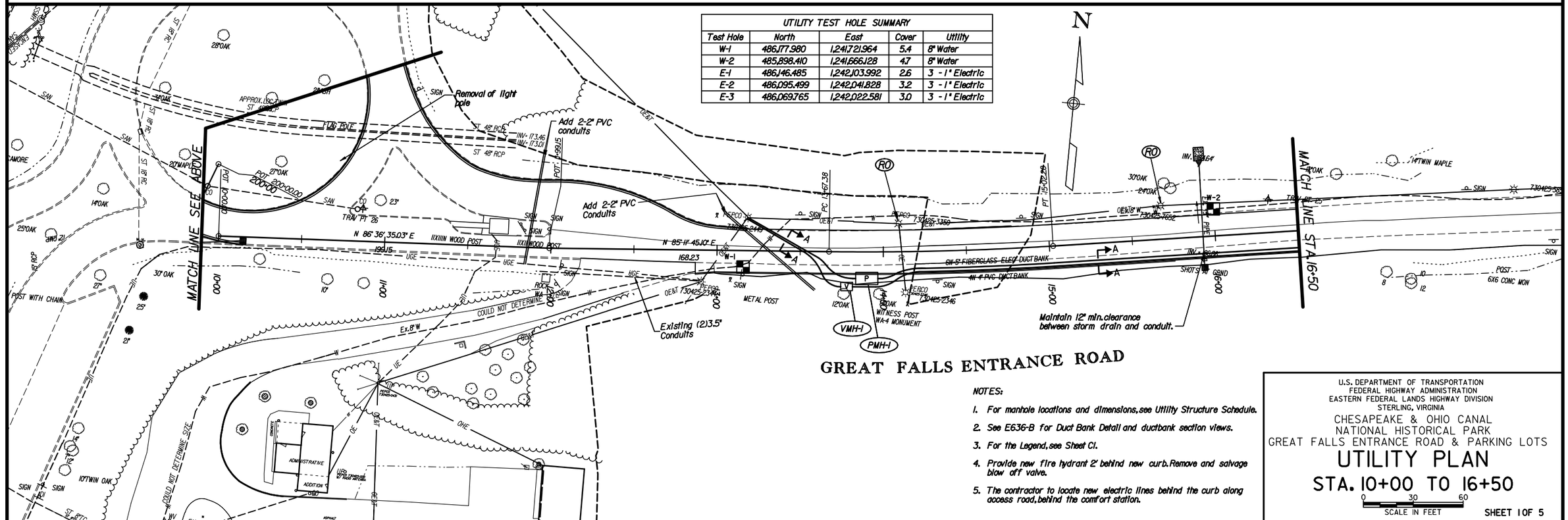

GREAT FALLS ENTRANCE ROAD

NOTES:

1. For manhole locations and dimensions, see Utility Structure Schedule.
2. See E636-B for Duct Bank Detail and ductbank section views.
3. For the Legend, see Sheet C1.
4. Provide new fire hydrant 2' behind new curb. Remove and salvage blow off valve.
5. The contractor to locate new electric lines behind the curb along access road, behind the comfort station.

U.S. DEPARTMENT OF TRANSPORTATION
FEDERAL HIGHWAY ADMINISTRATION
EASTERN FEDERAL LANDS HIGHWAY DIVISION
STERLING, VIRGINIA

CHESAPEAKE & OHIO CANAL
NATIONAL HISTORICAL PARK
GREAT FALLS ENTRANCE ROAD & PARKING LOTS

UTILITY PLAN

STA. 10+00 TO 16+50

0 30 60
SCALE IN FEET

SHEET 1 OF 5

$USER$ $DATE$ 9:40:17 AM $FILE$

NPS NO.	REG	STATE	PROJECT	SHEET NO.
412 / 41,911	NCR	MD	PRA-CHOH 102 (1)	P2

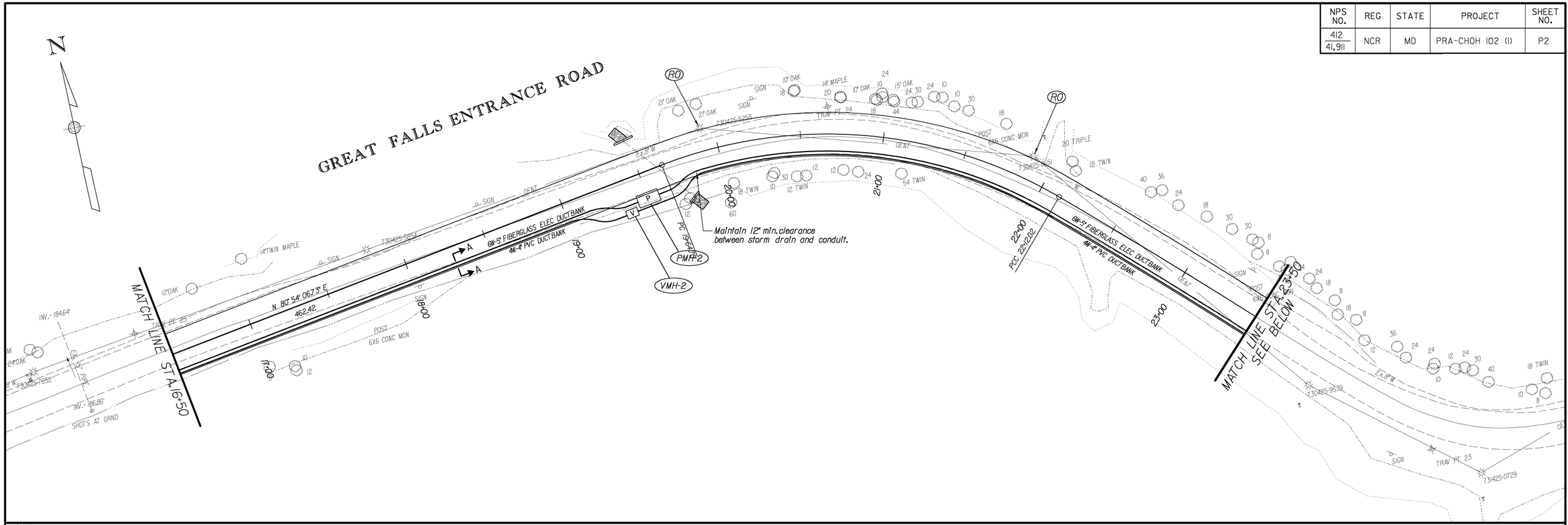

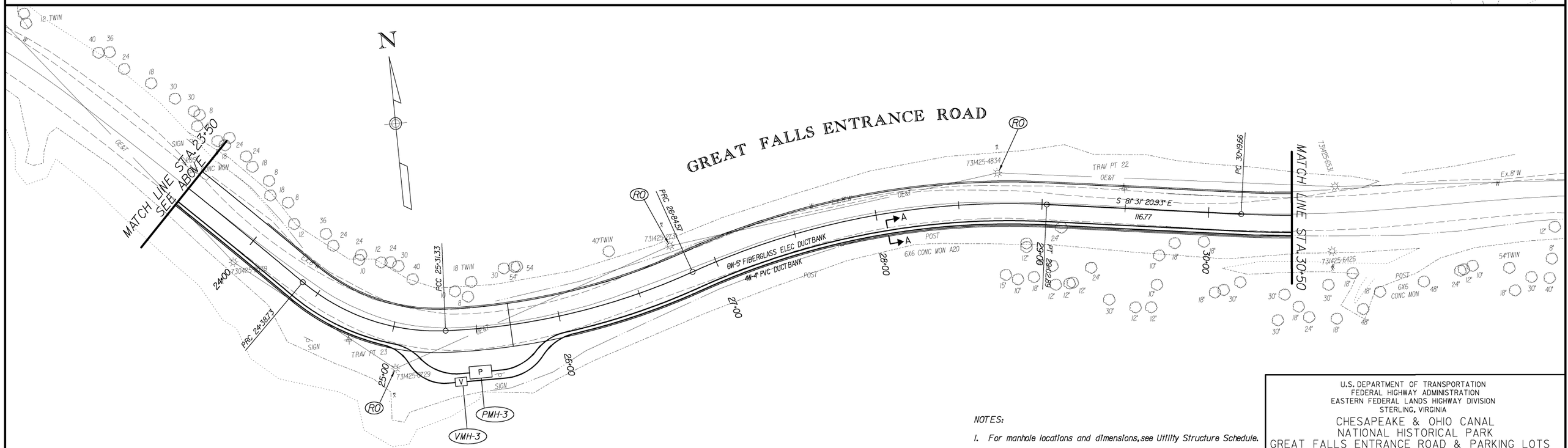

NOTES:

1. For manhole locations and dimensions, see Utility Structure Schedule.
2. See E636-B for Duct Bank Detail and ductbank section views.
3. For the Legend, see Sheet C1.

U.S. DEPARTMENT OF TRANSPORTATION
FEDERAL HIGHWAY ADMINISTRATION
EASTERN FEDERAL LANDS HIGHWAY DIVISION
STERLING, VIRGINIA

CHESAPEAKE & OHIO CANAL
NATIONAL HISTORICAL PARK
GREAT FALLS ENTRANCE ROAD & PARKING LOTS

UTILITY PLAN

STA. 16+50 TO 30+50

0 30 60
SCALE IN FEET

SHEET 2 OF 5

NPS NO.	REG	STATE	PROJECT	SHEET NO.
412 / 41,911	NCR	MD	PRA-CHOH 102 (1)	P3

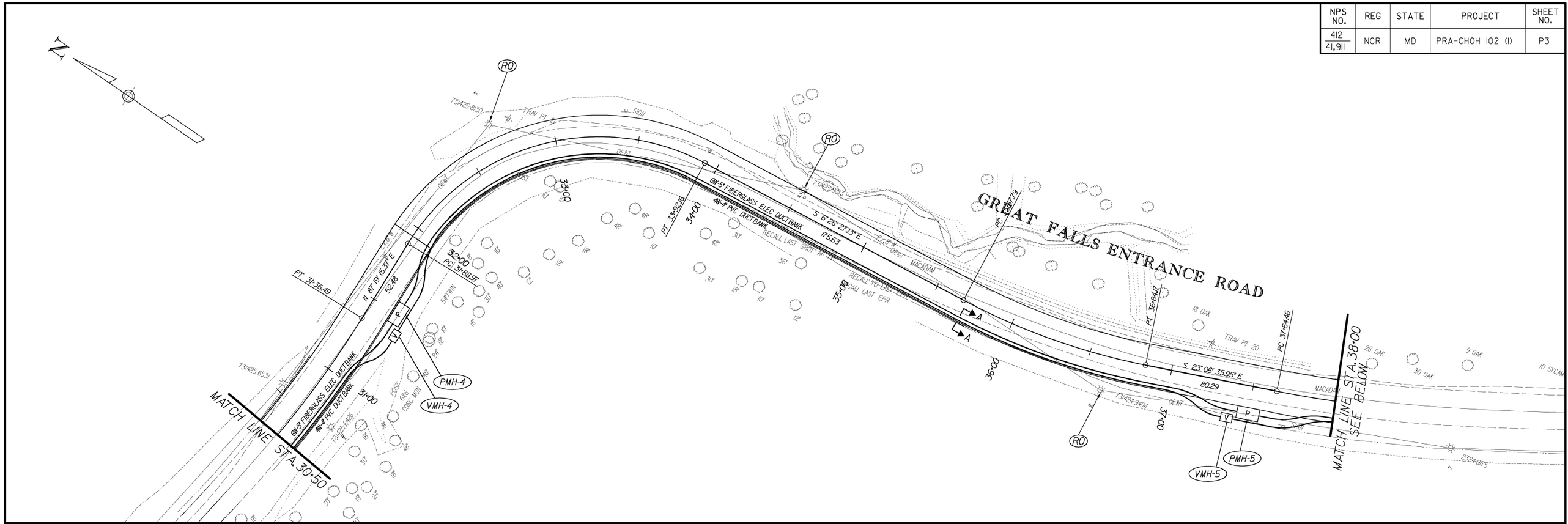

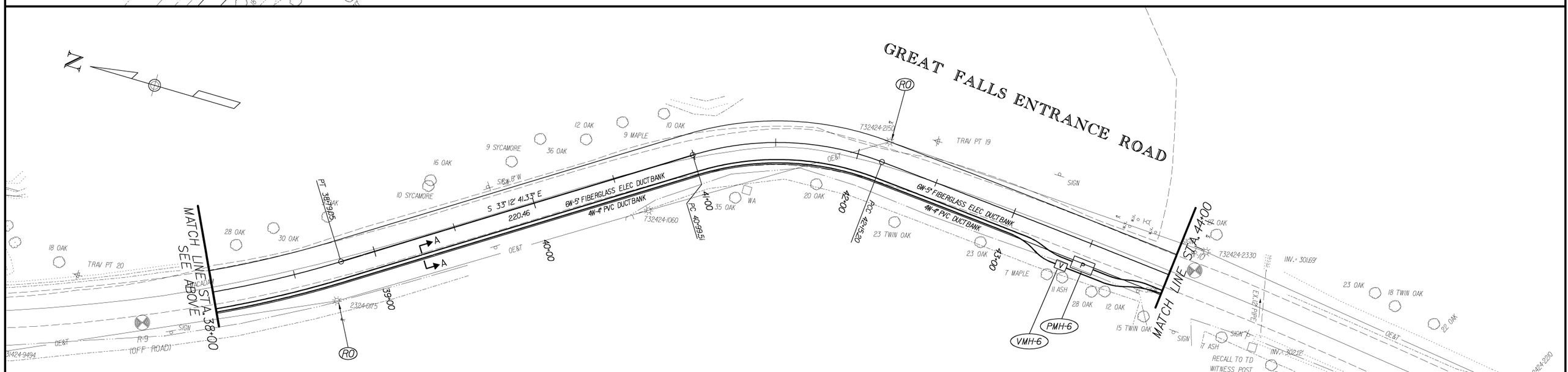

NOTES:

1. For manhole locations and dimensions, see Utility Structure Schedule.
2. See E636-B for Duct Bank Detail and ductbank section views.
3. For the Legend, see Sheet C1.

U.S. DEPARTMENT OF TRANSPORTATION
FEDERAL HIGHWAY ADMINISTRATION
EASTERN FEDERAL LANDS HIGHWAY DIVISION
STERLING, VIRGINIA

CHESAPEAKE & OHIO CANAL
NATIONAL HISTORICAL PARK
GREAT FALLS ENTRANCE ROAD & PARKING LOTS

UTILITY PLAN

STA. 30+50 TO 44+00

0 30 60
SCALE IN FEET

SHEET 3 OF 5

NPS NO.	REG	STATE	PROJECT	SHEET NO.
412 / 41,911	NCR	MD	PRA-CHOH 102 (1)	P4

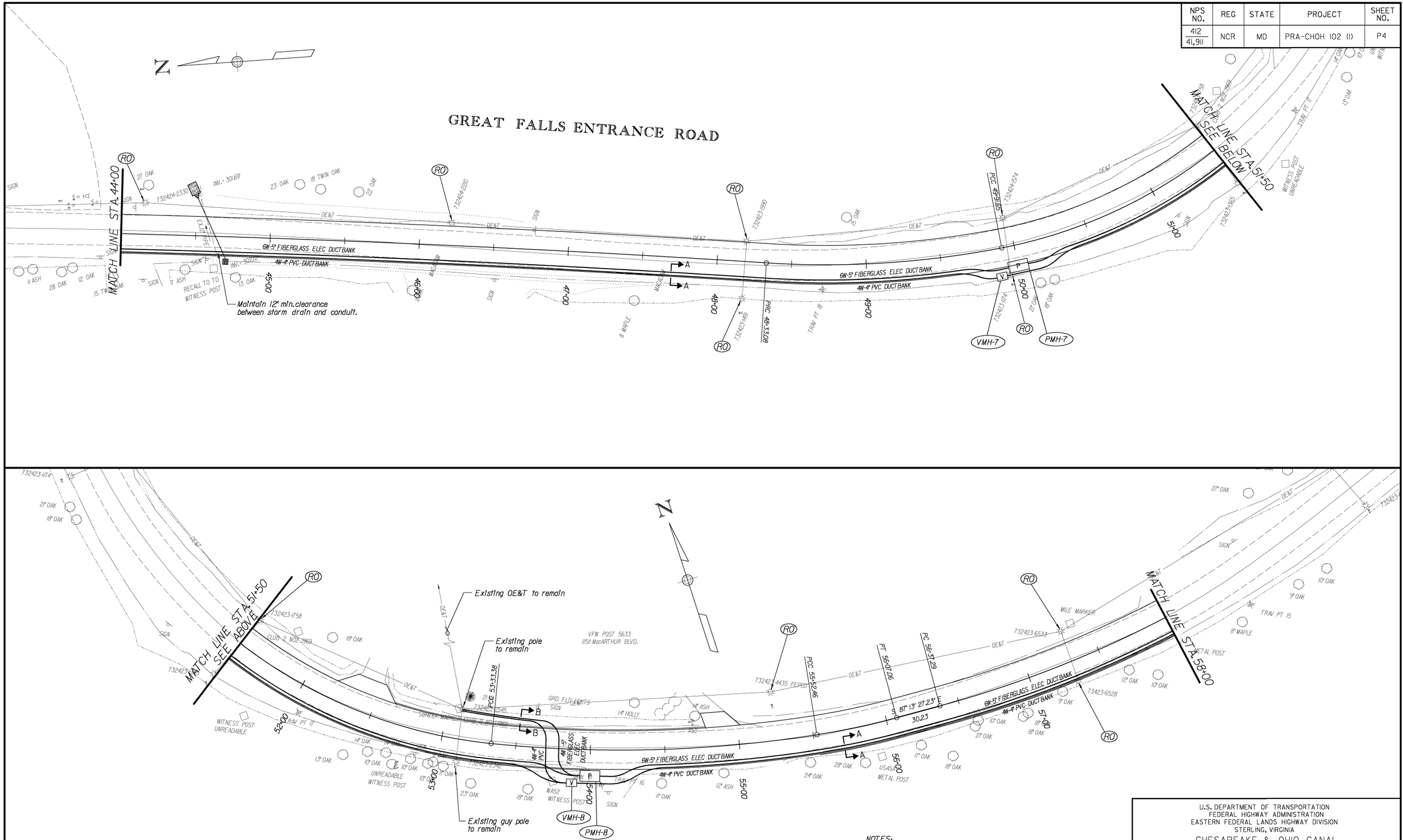

NOTES:

1. For manhole locations and dimensions, see Utility Structure Schedule.
2. See E636-B for Duct Bank Detail and ductbank section views.
3. For the Legend, see Sheet C1.

U.S. DEPARTMENT OF TRANSPORTATION
FEDERAL HIGHWAY ADMINISTRATION
EASTERN FEDERAL LANDS HIGHWAY DIVISION
STERLING, VIRGINIA

CHESAPEAKE & OHIO CANAL
NATIONAL HISTORICAL PARK
GREAT FALLS ENTRANCE ROAD & PARKING LOTS

UTILITY PLAN

STA. 44+00 TO 58+00

0 30 60
SCALE IN FEET

SHEET 4 OF 5

NPS NO.	REG	STATE	PROJECT	SHEET NO.
412 / 41,911	NCR	MD	PRA-CHOH 102 (1)	P5

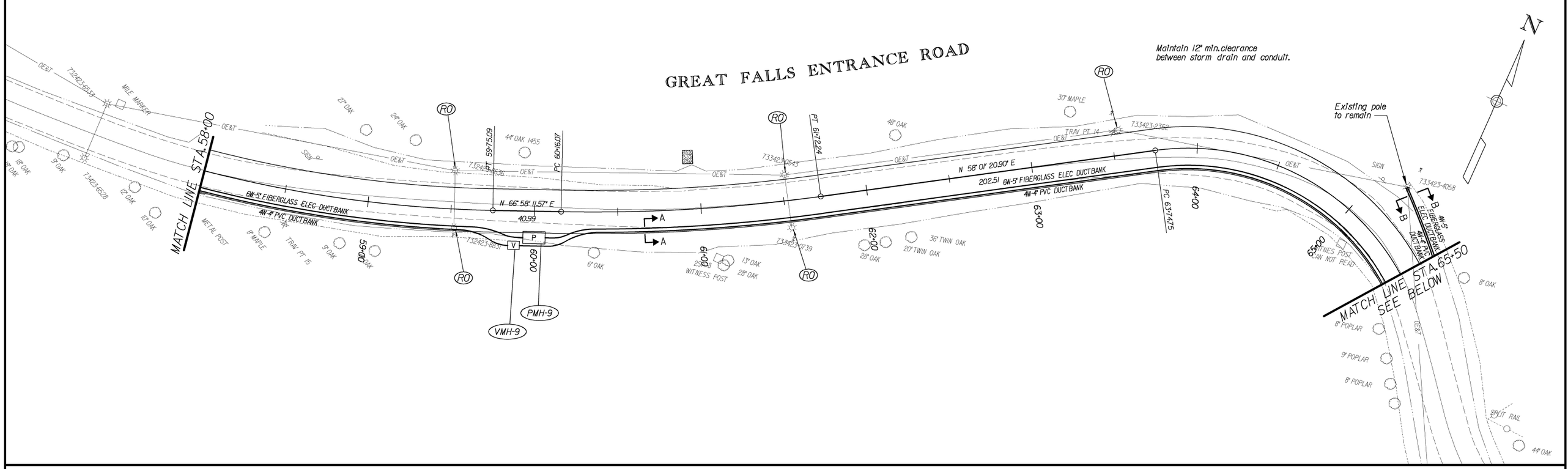

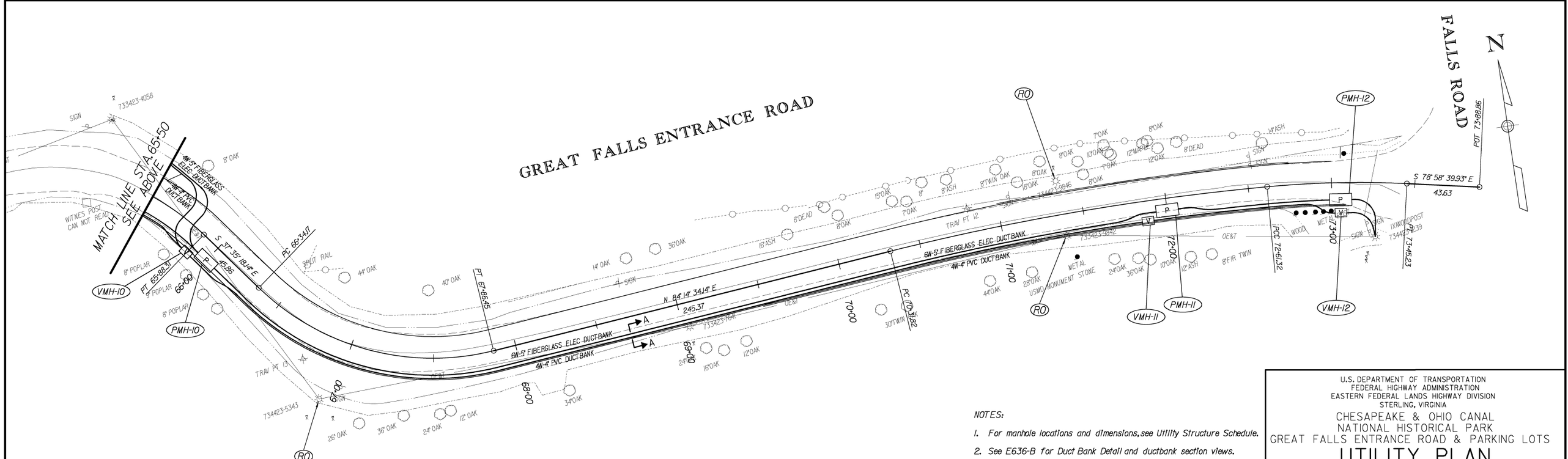

NOTES:

1. For manhole locations and dimensions, see Utility Structure Schedule.
2. See E636-B for Duct Bank Detail and ductbank section views.
3. For the Legend, see Sheet C1.

U.S. DEPARTMENT OF TRANSPORTATION
FEDERAL HIGHWAY ADMINISTRATION
EASTERN FEDERAL LANDS HIGHWAY DIVISION
STERLING, VIRGINIA

CHESAPEAKE & OHIO CANAL
NATIONAL HISTORICAL PARK
GREAT FALLS ENTRANCE ROAD & PARKING LOTS

UTILITY PLAN

STA. 58+00 TO 73+18.90

0 30 60
SCALE IN FEET

SHEET 5 OF 5

ferner 9/20/2007 8:57:32 AM o:\dlf0001170\01\cad\plans\ut06c&o.dgn

NPS NO.	REG	STATE	PROJECT	SHEET NO.
412 / 41,911	NCR	MD	PRA-CHOH 102 (1)	R1

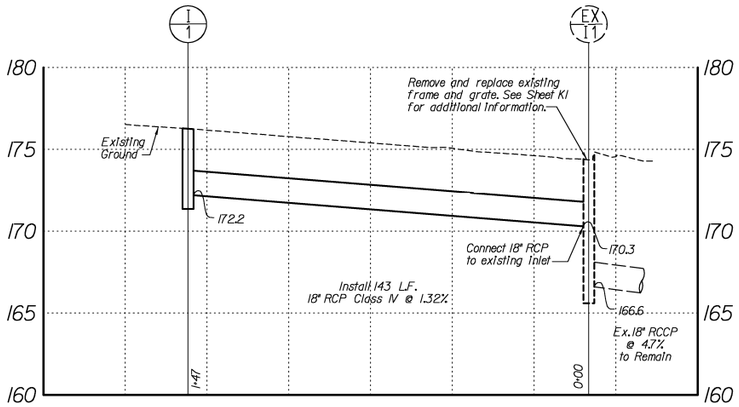

EXISTING INLET I-1 TO INLET I-1

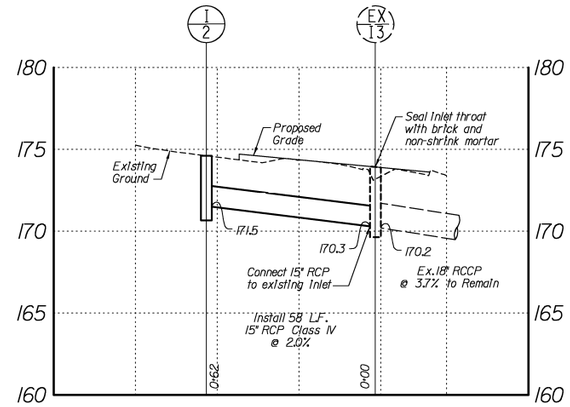

EXISTING MANHOLE MH-1 TO INLET 1-2

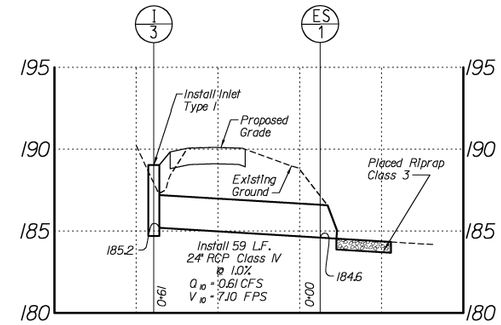

END SECTION ES-1 TO INLET 1-3

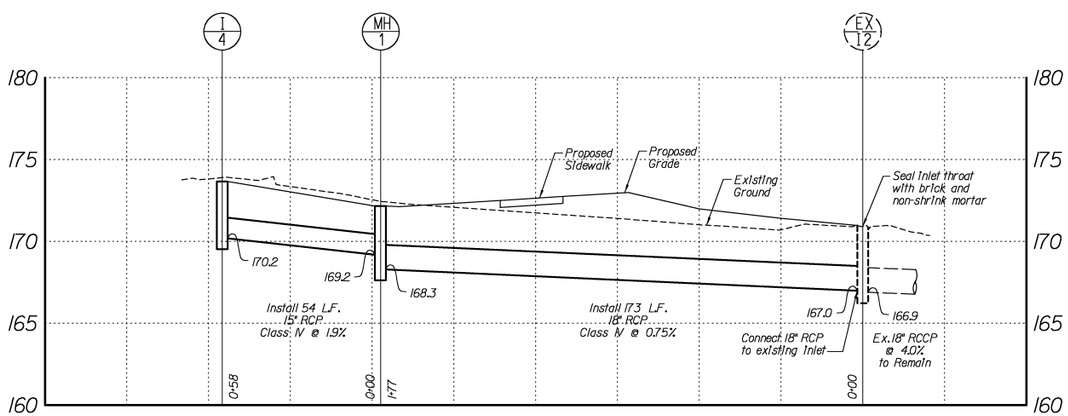

EXISTING INLET I-1 TO INLET 1-4

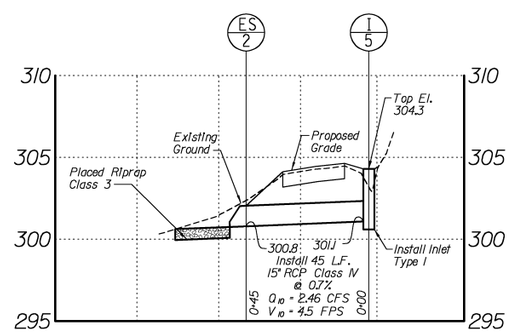

INLET I-5 TO END SECTION ES-2

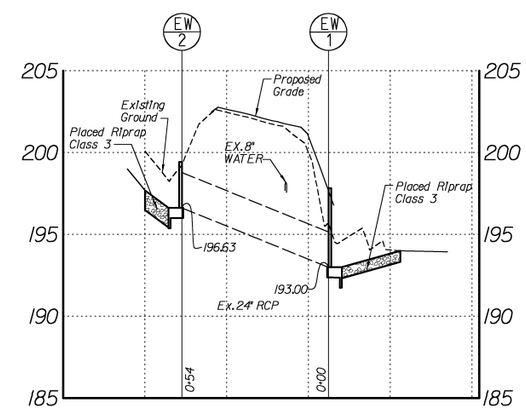

END WALL EW-2 TO END WALL EW-1

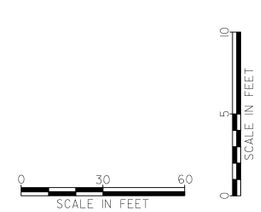

U.S. DEPARTMENT OF TRANSPORTATION
FEDERAL HIGHWAY ADMINISTRATION
EASTERN FEDERAL LANDS HIGHWAY DIVISION
STERLING, VIRGINIA

CHESAPEAKE & OHIO CANAL
NATIONAL HISTORICAL PARK
GREAT FALLS ENTRANCE ROAD & PARKING LOTS

DRAINAGE PROFILES

NPS NO.	REG	STATE	PROJECT	SHEET NO.
412 / 41,911	NCR	MD	PRH-CHOH 102 (1)	S1

DETAIL 24 – STABILIZED CONSTRUCTION ENTRANCE

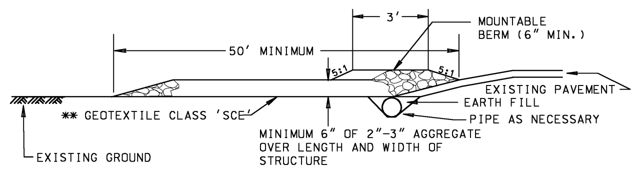

PROFILE

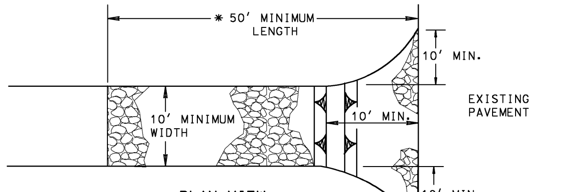

PLAN VIEW

STANDARD SYMBOL
SCE

Construction Specification

1. Length – minimum of 50' (*30' for single residence lot).

2. Width – 10' minimum, should be flared at the existing road to provide a turning radius.

3. Geotextile fabric (filter cloth) shall be placed over the existing ground prior to placing stone. **The plan approval authority may not require single family residences to use geotextile.

4. Stone – crushed aggregate (2" to 3") or reclaimed or recycled concrete equivalent shall be placed at least 6" deep over the length and width of the entrance.

5. Surface Water – all surface water flowing to or diverted toward construction entrances shall be piped through the entrance, maintaining positive drainage. Pipe installed through the stabilized construction entrance shall be protected with a mountable berm with 5:1 slopes and a minimum of 6" of stone over the pipe. Pipe has to be sized according to the drainage. When the SCE is located at a high spot and has no drainage to convey a pipe will not be necessary. Pipe should be sized according to the amount of runoff to be conveyed. A 6" minimum will be required.

6. Location – A stabilized construction entrance shall be located at every point where construction traffic enters or leaves a construction site. Vehicles leaving the site must travel over the entire length of the stabilized construction entrance.

U.S. DEPARTMENT OF AGRICULTURE SOIL CONSERVATION SERVICE	PAGE F – 17 – 3	MARYLAND DEPARTMENT OF ENVIRONMENT WATER MANAGEMENT ADMINISTRATION

DETAIL 20A – REMOVABLE PUMPING STATION

STANDARD SYMBOL
RPS

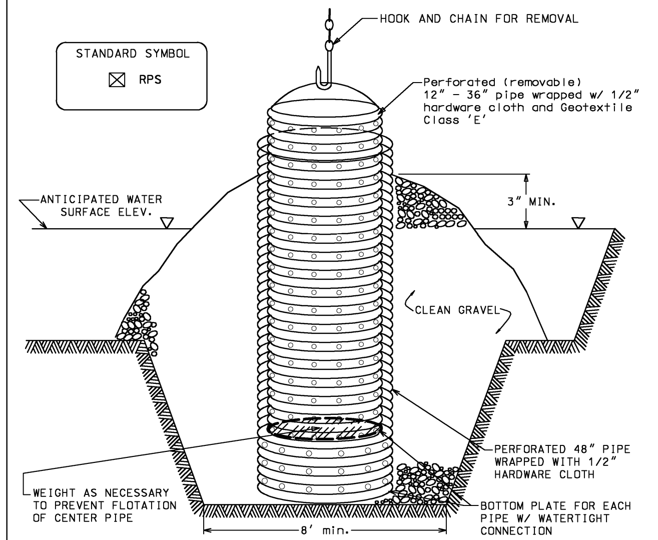

ELEVATION (CUT-AWAY)

Construction Specifications

1. The outer pipe should be 48" dia. or shall, in any case, be at least 4" greater in diameter than the center pipe. The outer pipe shall be wrapped with 1/2" hardware cloth to prevent backfill material from entering the perforations.

2. After installing the outer pipe, backfill around outer pipe with 2" aggregate or clean gravel.

3. The inside stand pipe (center pipe) should be constructed by perforating a corrugated or PVC pipe between 12" and 36" in diameter. The perforations shall be 1/2" X 6" slits or 1" diameter holes 6" on center. The center pipe shall be wrapped with 1/2" hardware cloth first, then wrapped again with Geotextile Class E.

4. The center pipe should extend 12" to 18" above the anticipated water surface elevation or riser crest elevation when dewatering a basin.

U.S. DEPARTMENT OF AGRICULTURE SOIL CONSERVATION SERVICE	PAGE D – 12 – 5	MARYLAND DEPARTMENT OF ENVIRONMENT WATER MANAGEMENT ADMINISTRATION

DETAIL 30 – EROSION CONTROL MATTING

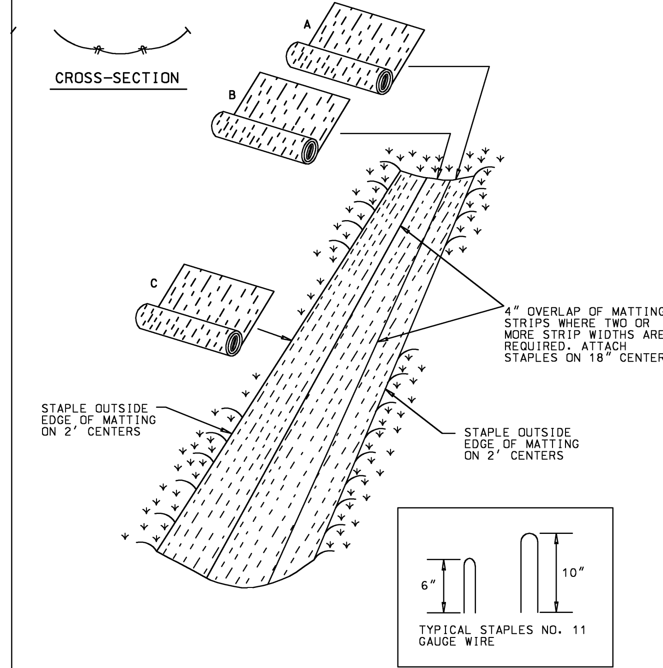

U.S. DEPARTMENT OF AGRICULTURE SOIL CONSERVATION SERVICE	PAGE G – 22 – 2	MARYLAND DEPARTMENT OF ENVIRONMENT WATER MANAGEMENT ADMINISTRATION

EROSION CONTROL MATTING

Construction Specifications

1. Key-in the matting by placing the top ends of the matting in a narrow trench, 6" in depth. Backfill the trench and tamp firmly to conform to the channel cross-section. Secure with a row of staples about 4" down slope from the trench. Spacing between staples is 6".

2. Staple the 4" overlap in the channel center using an 18" spacing between staples.

3. Before stapling the outer edges of the matting, make sure the matting is smooth and in firm contact with the soil.

4. Staples shall be placed 2' apart with 4 rows for each strip, 2 outer rows, and 2 alternating rows down the center.

5. Where one roll of matting ends and another begins, the end of the top strip shall overlap the upper end of the lower strip by 4", shiplap fashion. Reinforce the overlap with a double row of staples spaced 6" apart in a staggered pattern on either side.

6. The discharge end of the matting liner should be similarly secured with 2 double rows of staples.

Note: If flow will enter from the edge of the matting then the area effected by the flow must be keyed-in.

U.S. DEPARTMENT OF AGRICULTURE SOIL CONSERVATION SERVICE	PAGE G – 22 – 2A	MARYLAND DEPARTMENT OF ENVIRONMENT WATER MANAGEMENT ADMINISTRATION

SILT FENCE

Silt Fence Design Criteria

Slope Steepness	(Maximum) Slope Length	(Maximum) Silt Fence Length
Flatter than 50:1	unlimited	unlimited
50:1 to 10:1	125 feet	1,000 feet
10:1 to 5:1	100 feet	750 feet
5:1 to 3:1	60 feet	500 feet
3:1 to 2:1	40 feet	250 feet
2:1 and steeper	20 feet	125 feet

Note: In areas of less than 2% slope and sandy soils (USDA general classification system, soil Class A) maximum slope length and silt fence length will be unlimited. In these areas a silt fence may be the only perimeter control required.

U.S. DEPARTMENT OF AGRICULTURE SOIL CONSERVATION SERVICE	PAGE E – 15 – 3A	MARYLAND DEPARTMENT OF ENVIRONMENT WATER MANAGEMENT ADMINISTRATION

DETAIL 23B – AT GRADE INLET PROTECTION

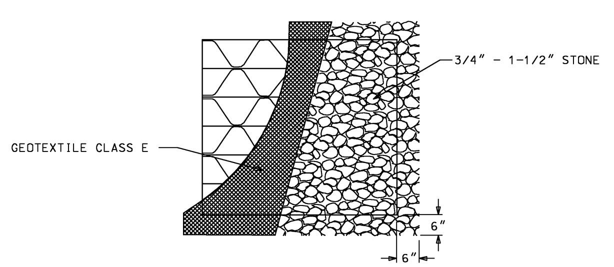

PLAN/CUT AWAY VIEW

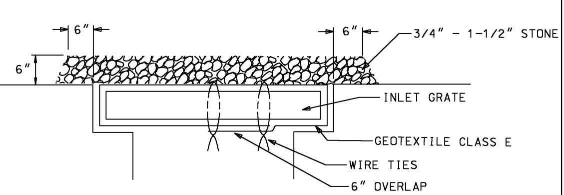

CROSS SECTION

STANDARD SYMBOL
AGIP

MAX. DRAINAGE AREA = 1 ACRE

Construction Specifications

1. Lift grate and wrap with Geotextile Class E to completely cover all openings, then set grate back in place.

2. Place 3/4" to 1-1/2" stone, 4"-6" thick on the grate to secure the fabric and provide additional filtration.

U.S. DEPARTMENT OF AGRICULTURE SOIL CONSERVATION SERVICE	PAGE E – 16 – 5A	MARYLAND DEPARTMENT OF ENVIRONMENT WATER MANAGEMENT ADMINISTRATION

DETAIL 23C – CURB INLET PROTECTION (COG OR COS INLETS)

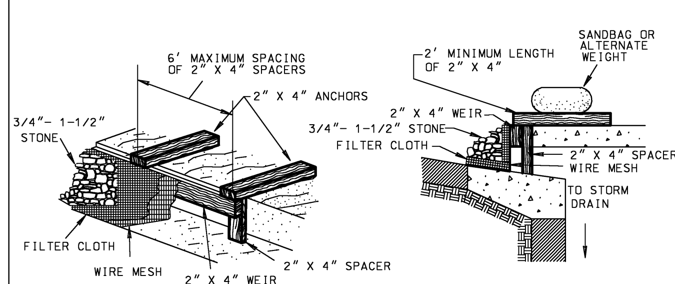

STANDARD SYMBOL
CIP

MAX. DRAINAGE AREA = 1/4 ACRE

Construction Specifications

1. Attach a continuous piece of wire mesh (30" minimum width by throat length plus 4') to the 2" x 4" weir (measuring throat length plus 2') as shown on the standard drawing.

2. Place a continuous piece of Geotextile Class E the same dimensions as the wire mesh over the wire mesh and securely attach it to the 2" x 4" weir.

3. Securely nail the 2" X 4" weir to a 9" long vertical spacer to be located between the weir and the inlet face (max. 4' apart).

4. Place the assembly against the inlet throat and nail (minimum 2' lengths of 2" x 4" to the top of the weir at spacer locations). These 2" x 4" anchors shall extend across the inlet top and be held in place by sandbags or alternate weight.

5. The assembly shall be placed so that the end spacers are a minimum 1' beyond both ends of the throat opening.

6. Form the 1/2" x 1/2" wire mesh and the geotextile fabric to the concrete gutter and against the face of the curb on both sides of the inlet. Place clean 3/4" x 11/2" stone over the wire mesh and geotextile in such a manner to prevent water from entering the inlet under or around the geotextile.

7. This type of protection must be inspected frequently and the filter cloth and stone replaced when clogged with sediment.

8. Assure that storm flow does not bypass the inlet by installing a temporary earth or asphalt dike to direct the flow to the inlet.

U.S. DEPARTMENT OF AGRICULTURE SOIL CONSERVATION SERVICE	PAGE E – 16 – 5B	MARYLAND DEPARTMENT OF ENVIRONMENT WATER MANAGEMENT ADMINISTRATION

DETAIL 22 – SILT FENCE

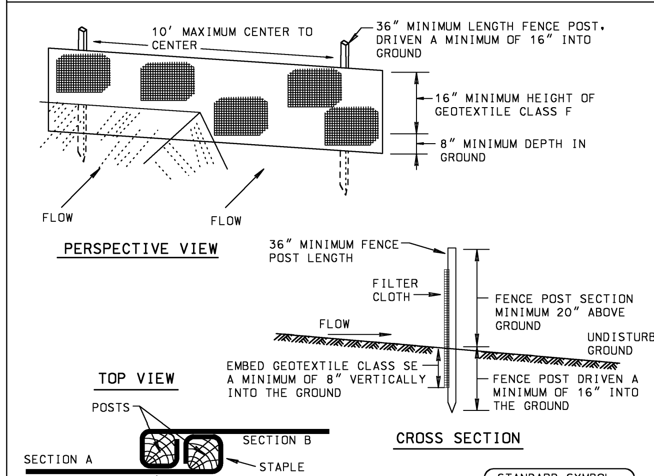

JOINING TWO ADJACENT SILT FENCE SECTIONS

STANDARD SYMBOL
SF

Construction Specifications

1. Fence posts shall be a minimum of 36" long driven 16" minimum into the ground. Wood posts shall be 1*" x 1*" square (minimum) cut, or 1*" diameter (minimum) round and shall be of sound quality hardwood. Steel posts will be standard T or U section weighting not less than 1.00 pond per linear foot.

2. Geotextile shall be fastened securely to each fence post with wire ties or staples at top and mid-section and shall meet the following requirements for Geotextile Class F:

Tensile Strength	50 lbs/in (min.)	Test: MSMT 509
Tensile Modulus	20 lbs/in (min.)	Test: MSMT 509
Flow Rate	0.3 gal ft²/ minute (max.)	Test: MSMT 322
Filtering Efficiency	75% (min.)	Test: MSMT 322

3. Where ends of geotextile fabric come together, they shall be overlapped, folded and stapled to prevent sediment bypass.

4. Silt Fence shall be inspected after each rainfall event and maintained when bulges occur or when sediment accumulation reached 50% of the fabric height.

U.S. DEPARTMENT OF AGRICULTURE SOIL CONSERVATION SERVICE	PAGE E – 15 – 3	MARYLAND DEPARTMENT OF ENVIRONMENT WATER MANAGEMENT ADMINISTRATION

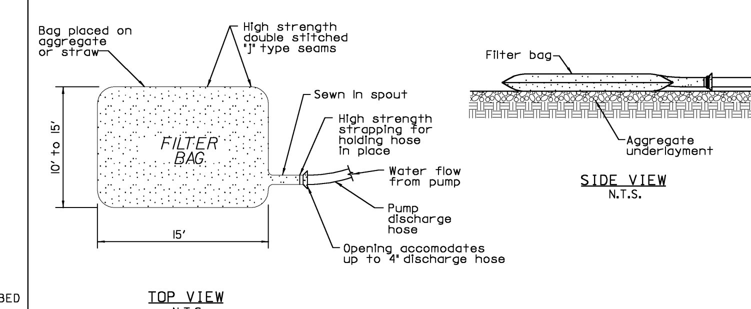

FILTER BAG (OR APPROVED EQUAL) DETAIL

FILTER BAG NOTES:

1. Filter bag shall have a nozzle large enough to accommodate a four (4) inch diameter pump discharge hose.
2. Nozzle shall be sealed tightly around the pump discharge hose with a strap or similar device to prevent unfiltered water from escaping.
3. The geotextile fabric shall meet the minimum requirements with properties determined in accordance with the Sub section 714.03 of the Special Contract Requirements (SCR)
4. Construction specifications are in subsection 157.10 of the Special Contract Requirements (SCR)

SHEET 1 OF 3

U.S. DEPARTMENT OF TRANSPORTATION
FEDERAL HIGHWAY ADMINISTRATION
EASTERN FEDERAL LANDS HIGHWAY DIVISION

DETAIL
MARYLAND DEPARTMENT OF THE ENVIRONMENT
EROSION CONTROL DETAILS

DETAIL APPROVED FOR USE XX/XX	DETAIL
REVISED: XX/XX	E157-A

1/18/2008 10:29:19 AM o:\dlf000l170\01\cad\plans\details\numbered-details\s01-d-tel57-a.dgn

NPS NO.	REG	STATE	PROJECT	SHEET NO.
412 / 41,911	NCR	MD	PRH-CHOH 102 (1)	S2

DETAIL 5 – RIP-RAP INFLOW PROTECTION

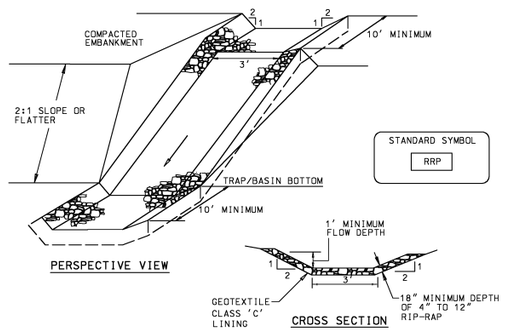

Construction Specifications

1. Rip-rap lined inflow channels shall be 1' in depth, have a trapezoidal cross section with 2:1 or flatter side slopes and 3' (min.) bottom width. The channel shall be lined with 4" to 12" rip- rap to a depth of 18".

2. Filter cloth shall be installed under all rip-rap. Filter cloth shall be Geotextile Class C.

3. Entrance and exit sections shall be installed as shown on the detail section.

4. Rip-rap used for the lining may be recycled for permanent outlet protection if the basin is to be converted to a stormwater management facility.

5. Gabion Inflow Protection may be used in lieu of Rip-rap Inflow Protection.

6. Rip-rap should blend into existing ground.

7. Rip-rap Inflow Protection shall be used where the slope is between 4:1 and 10:1, for slopes flatter than 10:1 use Earth Dike or Temporary Swale lining criteria.

U.S. DEPARTMENT OF AGRICULTURE SOIL CONSERVATION SERVICE	PAGE B – 6 – 2	MARYLAND DEPARTMENT OF ENVIRONMENT WATER MANAGEMENT ADMINISTRATION

DETAIL 33 – SUPER SILT FENCE

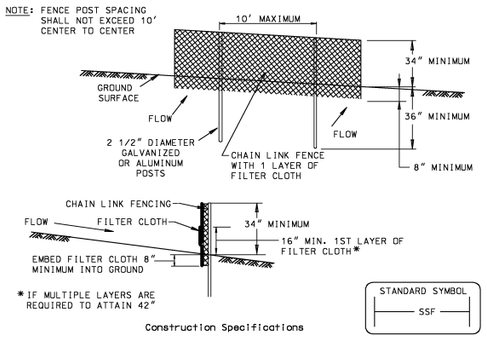

Construction Specifications

1. Fencing shall be 42" in height and constructed in accordance with the latest Maryland State Highway Details for Chain Link Fencing. The specification for a 6' fence shall be used, substituting 42" fabric and 6' length posts.

2. Chain link fence shall be fastened securely to the fence posts with wire ties. The lower tension wire, brace and truss rods, drive anchors and post caps are not required except on the ends of the fence.

3. Filter cloth shall be fastened securely to the chain link fence with ties spaced every 24" at the top and mid section.

4. Filter cloth shall be embedded a minimum of 8" into the ground.

5. When two sections of filter cloth adjoin each other, they shall be overlapped by 6" and folded.

6. Maintenance shall be performed as needed and silt buildups removed when "bulges" develop in the silt fence, or when silt reaches 50% of fence height

7. Filter cloth shall be fastened securely to each fence post with wire ties or staples at top and mid section and shall meet the following requirements for Geotextile Class F:

Tensile Strength	50 lbs/in (min.)	Test: MSMT 509
Tensile Modulus	20 lbs/in (min.)	Test: MSMT 509
Flow Rate	0.3 gal/ft²/minute (max.)	Test: MSMT 322
Filtering Efficiency	75% (min.)	Test: MSMT 322

U.S. DEPARTMENT OF AGRICULTURE SOIL CONSERVATION SERVICE	PAGE H – 26 – 3	MARYLAND DEPARTMENT OF ENVIRONMENT WATER MANAGEMENT ADMINISTRATION

DETAIL 1.4: DIVERSION PIPE

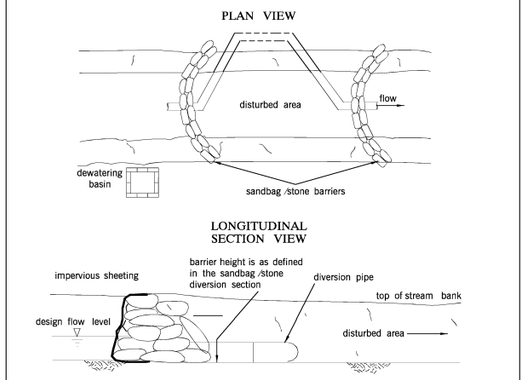

TEMPORARY INSTREAM CONSTRUCTION MEASURES	REVISED NOVEMBER 2000 PAGE 1.4 – 2	MARYLAND DEPARTMENT OF ENVIRONMENT WATER MANAGEMENT ADMINISTRATION

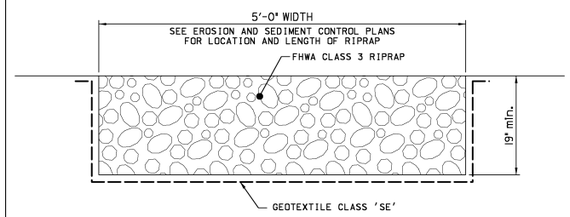

RIPRAP OUTLET AT ENDS OF CURB

NO SCALE

MGWC 1.4: DIVERSION PIPE

Temporary measure for dewatering in-channel construction sites

DESCRIPTION

The work should consist of installing flow diversion pipes in combination with sandbag or stone diversions when construction activities occur within the stream channel.

EFFECTIVE USES & LIMITATIONS

Diversion pipes with an insufficient flow capacity can cause the channel diversion to fail thereby resulting in severe erosion of the disturbed channel section under construction. Therefore, in-channel construction activities should occur only during periods of low flow.

MATERIAL SPECIFICATIIONS

Materials for stream diversions should meet the following requirements:

Riprap: Stone should be washed and have a minimum diameter of 6 inches (15 centimeters).
Sandbags: Sandbags should consist of materials which are resistant to ultra-violet radiation, tearing, and puncture and should be woven tightly enough to prevent leakage of fill material (i.e., sand, fine gravel, etc.).
Sheeting: Sheeting should consist of polyethylene or other material which is impervious and resistant to puncture and tearing.

INSTALLATION GUIDELINES

All erosion and sediment control devices including mandatory dewatering basins should be installed as the first order of business according to a plan approved by the WMA or local authority. Installation should proceed from upstream to downstream during low flow conditions. If necessary, silt fence or straw bales should be installed around the perimeter of the work area.

Diversion pipes with sandbag or stone barriers should be completed as follows (refer to Detail 1.4):

1. Sandbag/stone barriers should be sized and installed as detailed in MGWC 1.5: Sandbag/Stone Diversion. The materials should be sized to withstand base flow velocities.
2. All excavated material should be deposited and stabilized in an approved area outside the 100-year floodplain unless otherwise authorized by the WMA.
3. Sediment-laden water from the construction area should be pumped to a dewatering basin.
4. The diversion pipe should have a minimum capacity sufficient to convey the 2-year flow for projects with a duration of two weeks or greater. For projects of shorter duration, the capacity of the pipe can be reduced accordingly.
5. If necessary, silt fence or straw bales should be installed around the perimeter of the work area.

DETAIL 19 – STONE OUTLET STRUCTURE

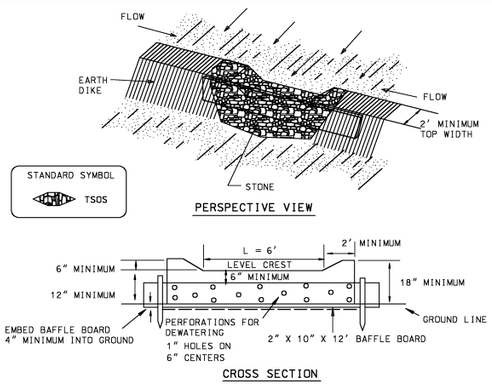

Construction Specifications

1. Crushed stone shall be used. Gravel may be used if crushed stone is not available. The stone shall be 2"-3" in size.

2. The crest of the stone dike shall be at least 6" lower than the lowest elevation of the top of the earth dike and shall be level.

3. The stone outlet structure shall be embedded into the soil a minimum of 4".

4. The minimum length of the crest of the stone outlet structure shall be 6'.

5. The stone outlet structure shall be inspected after each rain. Stone shall be replaced when the structure ceases to function and ponding results.

6. The baffle board shall be extended one foot into the dike, staked and embedded 4" into the existing ground.

7. The drainage area to this structure shall be less than * acre.

U.S. DEPARTMENT OF AGRICULTURE SOIL CONSERVATION SERVICE	PAGE C – 11 – 2	MARYLAND DEPARTMENT OF ENVIRONMENT WATER MANAGEMENT ADMINISTRATION

SUPER SILT FENCE

Design Criteria

Slope	Slope Steepness	Slope Length (maximum)	Silt Fence Length (maximum)
0 – 10%	0 – 10:1	Unlimited	Unlimited
10 – 20%	10:1 – 5:1	200 feet	1,500 feet
20 – 33%	5:1 – 3:1	100 feet	1,000 feet
33 – 50%	3:1 – 2:1	100 feet	500 feet
50% +	2:1 +	50 feet	250 feet

U.S. DEPARTMENT OF AGRICULTURE SOIL CONSERVATION SERVICE	PAGE H – 26 – 3A	MARYLAND DEPARTMENT OF ENVIRONMENT WATER MANAGEMENT ADMINISTRATION

TYPICAL DETAIL – CLEAR WATER DIVERSION FENCE

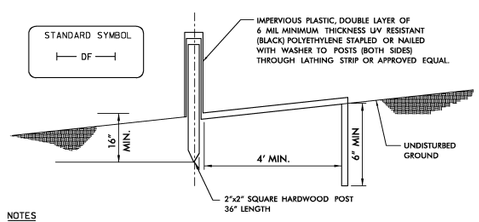

NOTES

1. 5' MAXIMUM POST SPACING.
2. MAINTAIN AN UNINTERRUPTED POSITIVE GRADE TO A STABLE OUTLET.
3. TOTAL WIDTH OF POLYETHYLENE IS 10' MINIMUM PER LAYER (FOLDED 20' WIDTH IS ACCEPTABLE).
4. LONGITUDINAL OVERLAPPING IS 1' MINIMUM. OVERLAP THE UPGRADE SHEET OVER THE DOWNGRADE SHEET.
5. MAXIMUM LONGITUDINAL SLOPE = 10%
6. MAXIMUM DRAINAGE AREA TO OUTLET = 2 ACRES

DETAIL 4 – PIPE SLOPE DRAIN

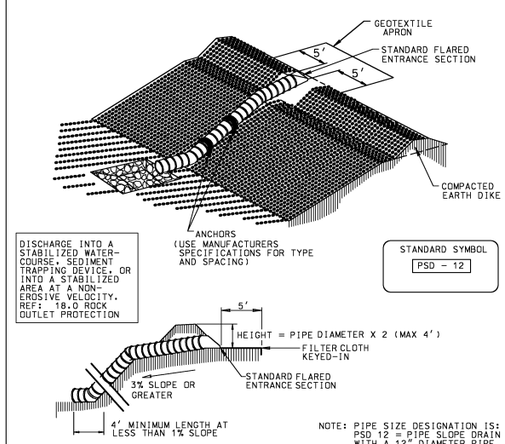

Table 6 Design Criteria for Pipe Slope Drain

Size	Pipe/Tubing Diameter (D) in	Maximum Drainage Area (Acres)
PSD-12	12	0.5
PSD-18	18	1.5
PSD-21	21	2.5
PSD-24	24	3.5
PSD-24 (2)	24	5.0

U.S. DEPARTMENT OF AGRICULTURE SOIL CONSERVATION SERVICE	PAGE B – 5 – 4	MARYLAND DEPARTMENT OF ENVIRONMENT WATER MANAGEMENT ADMINISTRATION

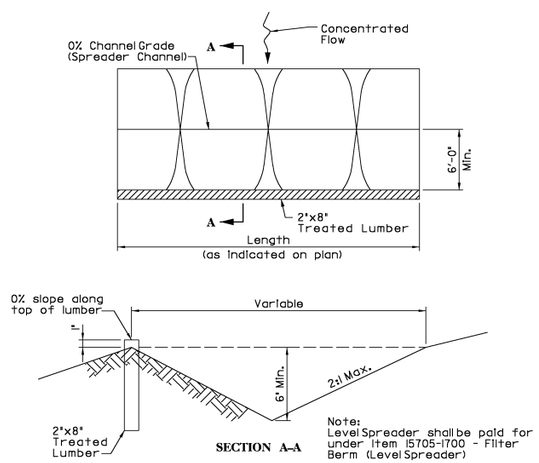

LEVEL SPREADER DETAIL

SHEET 2 OF 3

U.S. DEPARTMENT OF TRANSPORTATION
FEDERAL HIGHWAY ADMINISTRATION
EASTERN FEDERAL LANDS HIGHWAY DIVISION

DETAIL
MARYLAND DEPARTMENT OF THE ENVIRONMENT
EROSION CONTROL DETAILS

DETAIL APPROVED FOR USE XX/XX
REVISED: XX/XX

DETAIL E157-B

1/18/2008 11:58:07 AM Q:\DIF0001170\0\CAD\Plans\Details\Numbered-Details\S02-d-1E157-B.dgn

NPS NO.	REG	STATE	PROJECT	SHEET NO.
412 / 41,911	NCR	MD	PRH-CHOH 102 (1)	S3

DETAIL 26 – ROCK OUTLET PROTECTION II

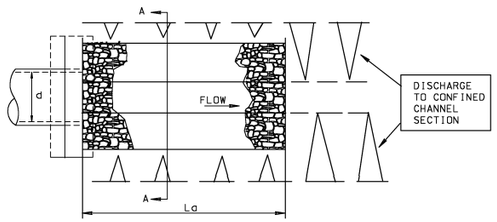

PLAN VIEW

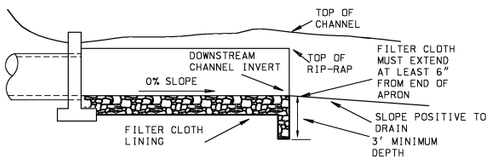

ELEVATION

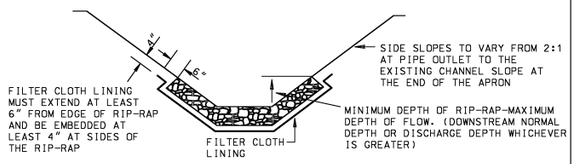

SECTION A–A

NOTE: FILTER CLOTH SHALL BE GEOTEXTILE CLASS C

U.S. DEPARTMENT OF AGRICULTURE SOIL CONSERVATION SERVICE	PAGE F – 18 – 9	MARYLAND DEPARTMENT OF ENVIRONMENT WATER MANAGEMENT ADMINISTRATION

ROCK OUTLET PROTECTION II & III

Construction Specifications

1. The subgrade for the filter, rip-rap, or gabion shall be prepared to the required lines and grades. Any fill required in the subgrade shall be compacted to a density of approximately that of the surrounding undisturbed material.

2. The rock or gravel shall conform to the specified grading limits when installed respectively in the rip-rap or filter.

3. Geotextile shall be protected from punching, cutting, or tearing. Any damage other than an occasional small hole shall be repaired by placing another piece of geotextile over the damaged part or by completely replacing the geotextile. All overlaps whether for repairs or for joining two pieces of geotextile shall be a minimum of one foot.

4. Stone for the rip-rap or gabion outlets may be placed by equipment. They shall be constructed to the full course thickness in one operation and in such a manner as to avoid displacement of underlying materials. The stone for rip-rap or gabion outlets shall be delivered and placed in a manner that will ensure that it is reasonably homogeneous with the smaller stones and spalls filling the voids between the larger stones. Rip-rap shall be placed in a manner to prevent damage to the filter blanket or geotextile. Hand placement will be required to the extent necessary to prevent damage to the permanent works.

5. The stone shall be placed so that it blends in with the existing ground. If the stone is placed too high then the flow will be forced out of the channel and scour adjacent to the stone will occur.

U.S. DEPARTMENT OF AGRICULTURE SOIL CONSERVATION SERVICE	PAGE F – 18 – 9A, 10A	MARYLAND DEPARTMENT OF ENVIRONMENT WATER MANAGEMENT ADMINISTRATION

DETAIL 27 – ROCK OUTLET PROTECTION III

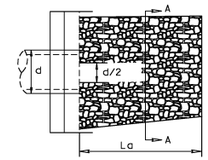

PLAN VIEW

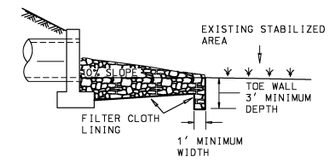

ELEVATION

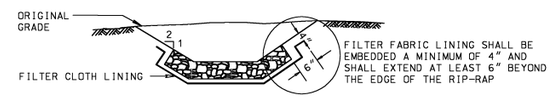

SECTION A–A

NOTE: FILTER CLOTH SHALL BE GEOTEXTILE CLASS C

U.S. DEPARTMENT OF AGRICULTURE SOIL CONSERVATION SERVICE	PAGE F – 18 – 10	MARYLAND DEPARTMENT OF ENVIRONMENT WATER MANAGEMENT ADMINISTRATION

SANDBAG DIVERSION DETAIL

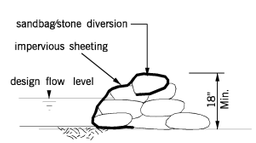

TRANSVERSE SECTION VIEW

SHEET 3 OF 3

U.S. DEPARTMENT OF TRANSPORTATION
FEDERAL HIGHWAY ADMINISTRATION
EASTERN FEDERAL LANDS HIGHWAY DIVISION

DETAIL
MARYLAND DEPARTMENT OF THE ENVIRONMENT

EROSION CONTROL DETAILS

DETAIL APPROVED FOR USE XX/XX	DETAIL
REVISED: XX/XX	E157-C

1/18/2008 10:30:18 AM o:\dlf0001lf70\0\cad\plans\details\numbered-details\s03-d-te157-c.dgn

NPS NO.	REG	STATE	PROJECT	SHEET NO.
412 / 41,911	NCR	MD	PRA CHOH 102 (1)	S4

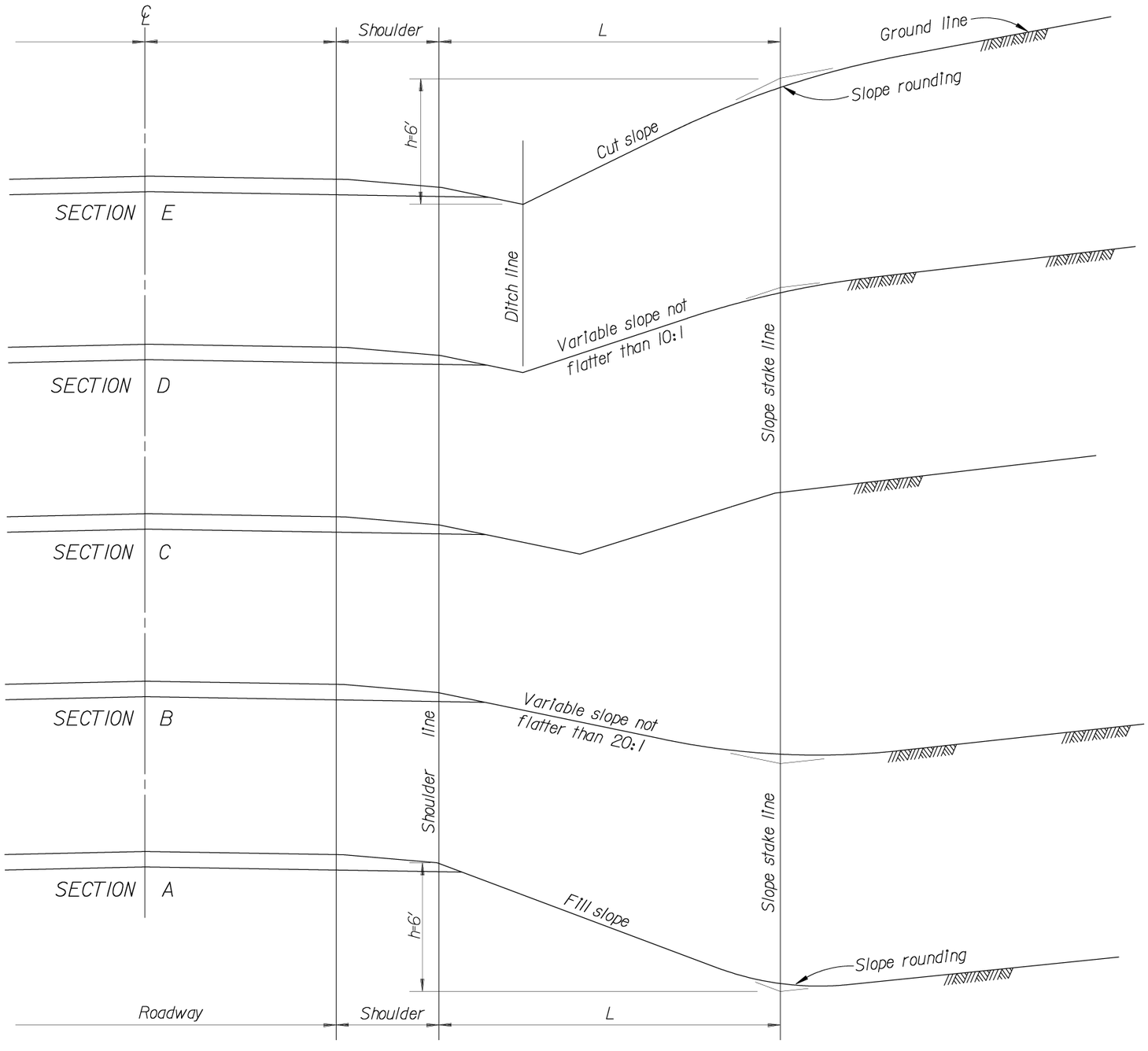

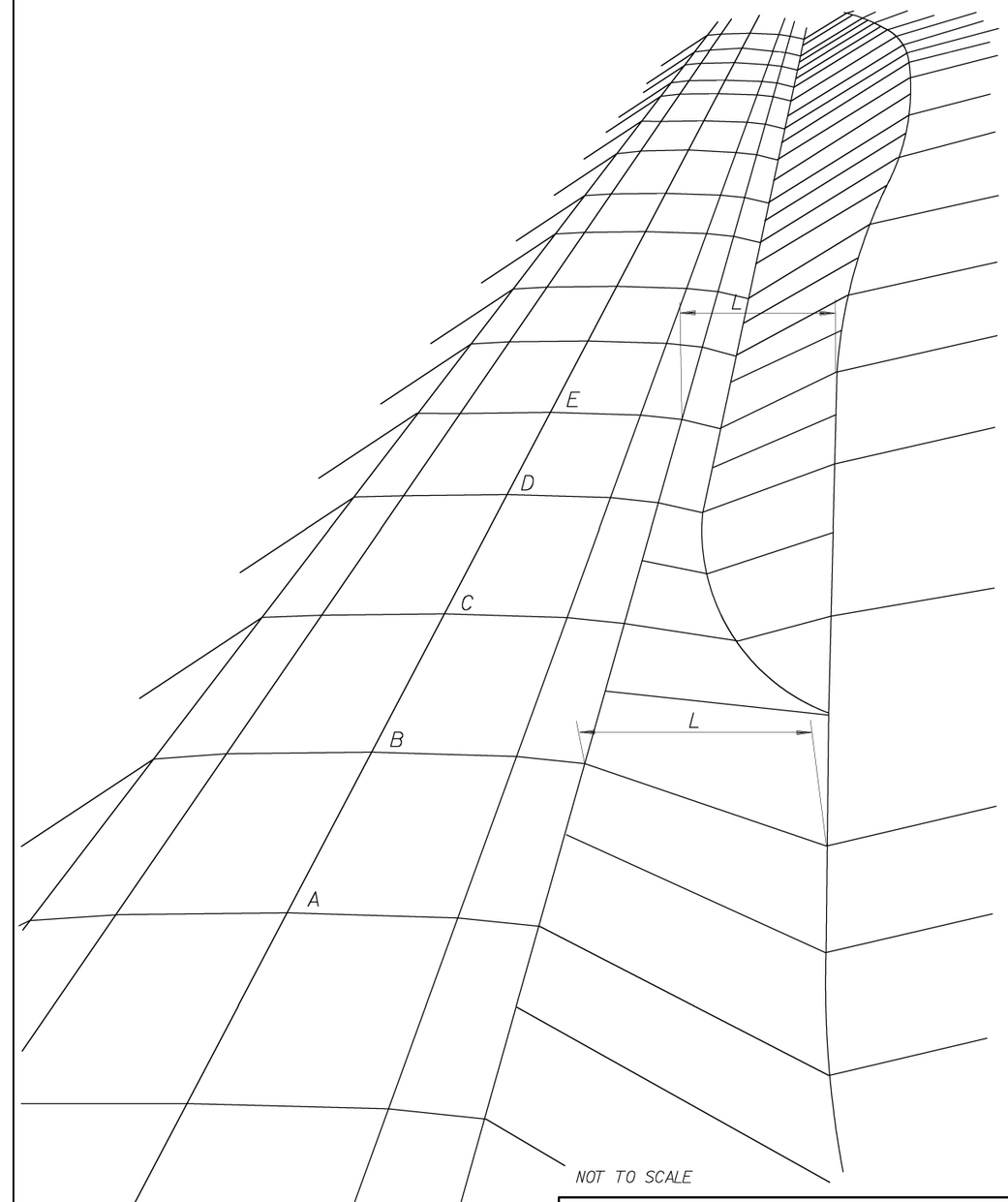

Note :

Distance L is to be maintained as the distance to slope stakes to establish the blend of cut and fill slopes into the original ground.

U.S. DEPARTMENT OF TRANSPORTATION
FEDERAL HIGHWAY ADMINISTRATION
EASTERN FEDERAL LANDS HIGHWAY DIVISION

DETAIL

CUT AND FILL SLOPE TRANSITIONS

DETAIL APPROVED FOR USE XX/XX

REVISED: XX/XX

DETAIL E204-1

9/20/2007 8:57:38 AM c:\dif000\ifrom\cad\plans\details\numbered-details\s04-dt204xol.dgn

NPS NO.	REG	STATE	PROJECT	SHEET NO.
412 / 41,911	NCR	MD	PRA-CHOH 102 (1)	S5

DEPTH (d)	
Riprap Class	Depth (d)-(in)
1	12
2	18
3	24
4	30
5	42
6	48

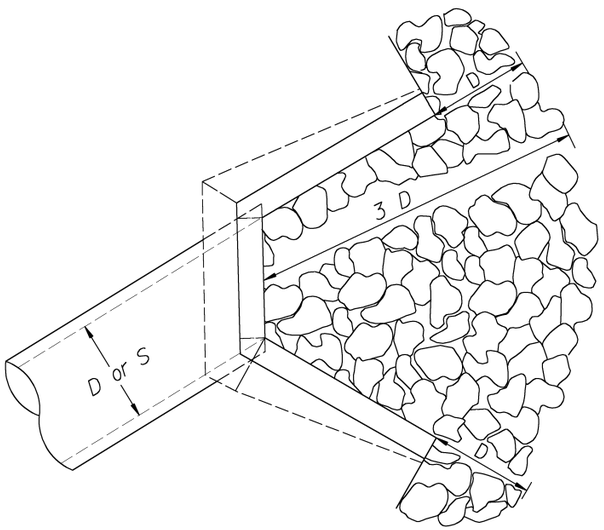

PLAN

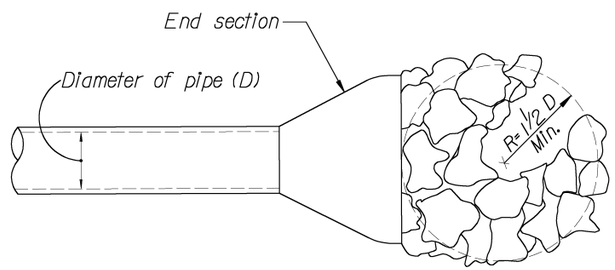

PLAN

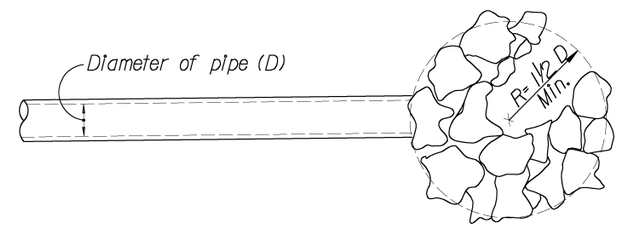

PLAN

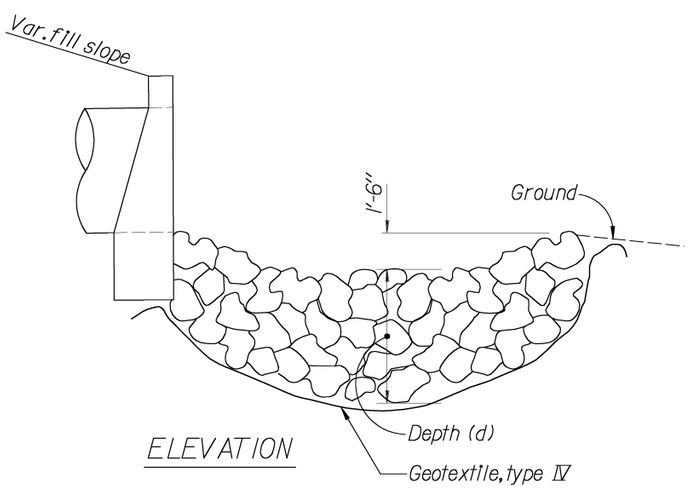

ELEVATION

CULVERT WITH HEADWALL

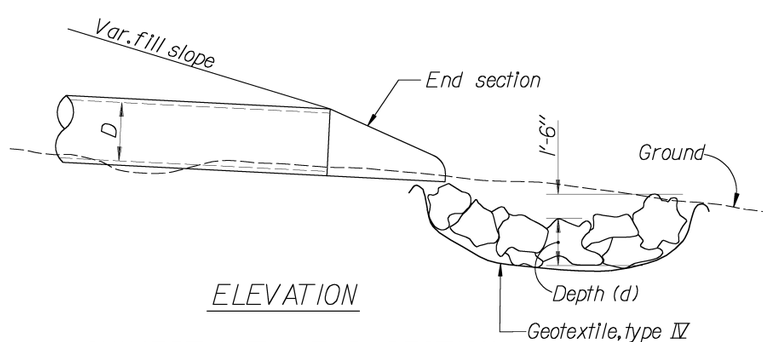

ELEVATION

CULVERT WITH END SECTION

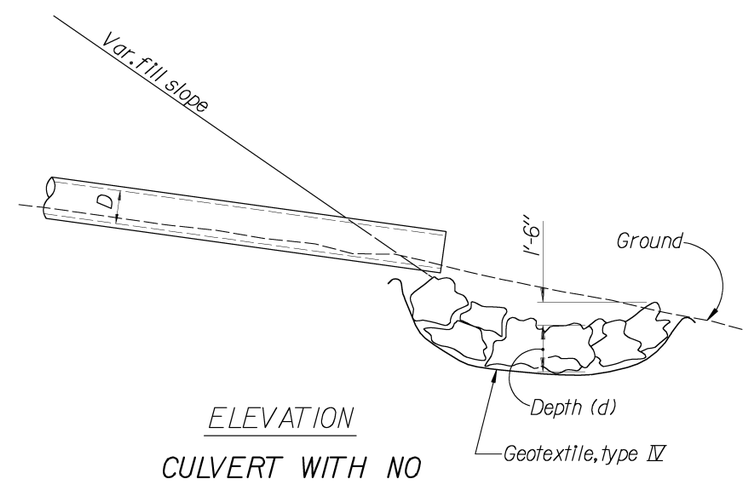

ELEVATION

CULVERT WITH NO END TREATMENT

NOT TO SCALE

NOTE:

For arch or elliptical pipes, use equivalent diameter for (D) dimension

U.S. DEPARTMENT OF TRANSPORTATION
FEDERAL HIGHWAY ADMINISTRATION
EASTERN FEDERAL LANDS HIGHWAY DIVISION

DETAIL

LOOSE RIPRAP AT CULVERT

DETAIL APPROVED FOR USE --/----

REVISED:

DETAIL E251-1

9/20/2007 8:57:39 AM o:\dlf0001lf70\0\cad\plans\details\numbered-details\s05-dt251\x01.dgn

NPS NO.	REG	STATE	PROJECT	SHEET NO.
412 / 41,911	NCR	MD	PRH-CHOH 102 (1)	S6

NOTE:

1. Lap longitudinal reinforcement not less than 13-inches.
2. Lap transverse reinforcement not less than 9-inches.
3. Eliminate all longitudinal and transverse reinforcing steel, wire, or bars where plain portland cement concrete pavement or base is required.
4. Provide the same type of dowel assemblies and tie bars for joints in plain portland cement concrete pavement as shown for joints in reinforced pavement.
5. Space transverse expansion joints at a minimum of 280 feet.
6. Space transverse contraction joints for reinforced concrete pavement at not more than 40 foot intervals and for plain concrete pavement or base at not more than 20 foot intervals.
7. See Standard 501-2 for joint details and joint sealing details.

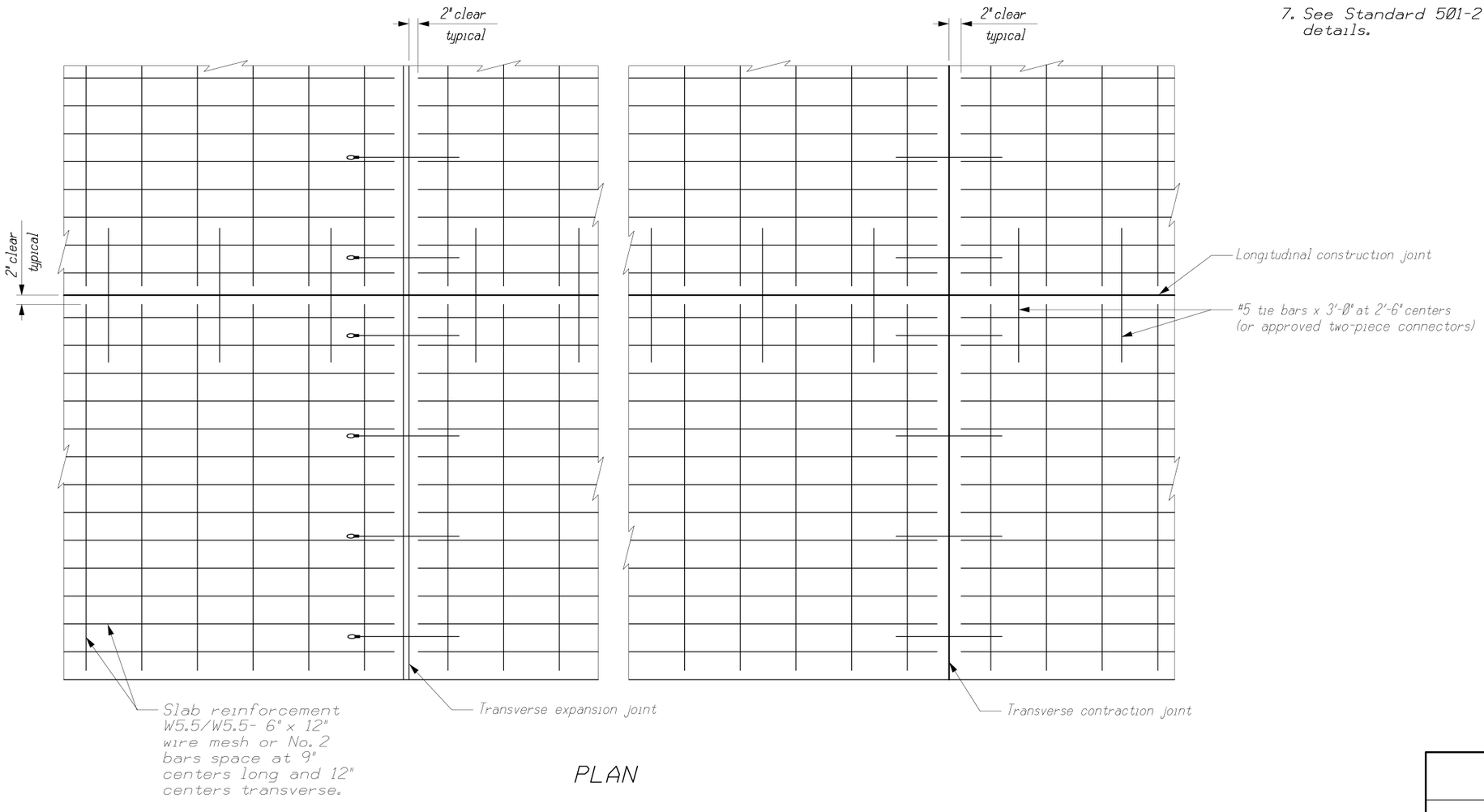

PLAN

NO SCALE

U.S. DEPARTMENT OF TRANSPORTATION
FEDERAL HIGHWAY ADMINISTRATION
FEDERAL LANDS HIGHWAY

U.S. CUSTOMARY STANDARD

PORTLAND CEMENT CONCRETE PAVEMENT

STANDARD APPROVED FOR USE --/----

REVISED:

DRAFT: 9/2004

STANDARD 501-1

9/20/2007 8:57:40 AM a:\dlf0001\f70\0\cad\plans\details\numbered-details\s06-sf501ol_us customary.dgn

NPS NO.	REG	STATE	PROJECT	SHEET NO.
412 / 41,911	NCR	MD	PRH-CHOH 102 (1)	S7

NOTE:

1. Anchor tie bars and dowels into existing concrete pavement with epoxy resin adhesive.
2. Space expansion joints a minimum of 280 feet.
3. W=⅜" for longitudinal contraction joints and ¾" for transverse expansion and contraction joints field conditions require larger openings.
4. Maintain joint sealant shape factor of 1:1 except that when silicone sealant is used, the width to depth (W:D) shape factor is 1:2.

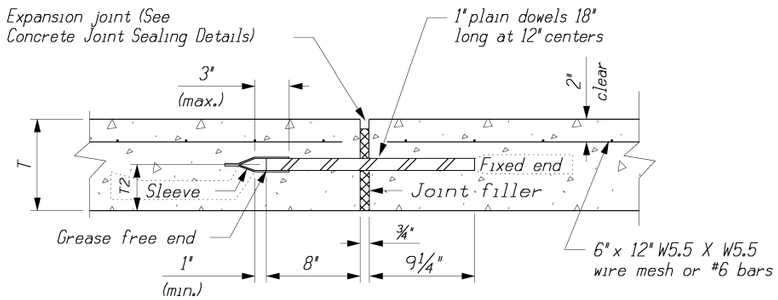

TRANSVERSE EXPANSION JOINT

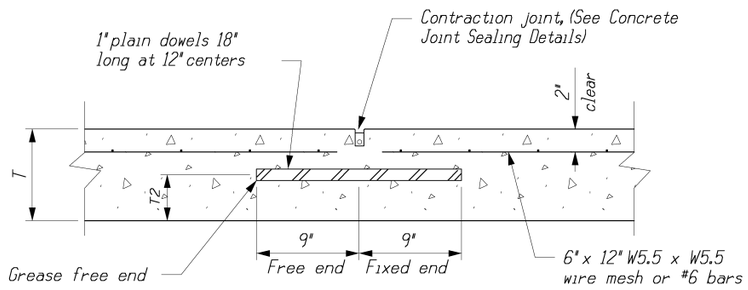

TRANSVERSE CONTRACTION JOINT

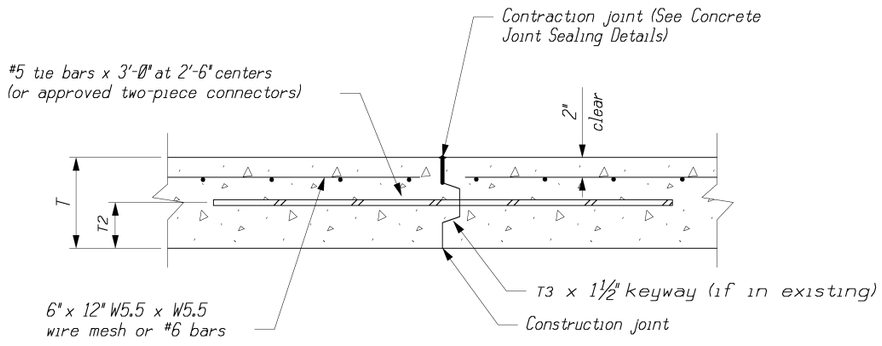

LONGITUDINAL CONSTRUCTION JOINT

REINFORCED PORTLAND CEMENT CONCRETE PAVEMENT JOINT DETAILS

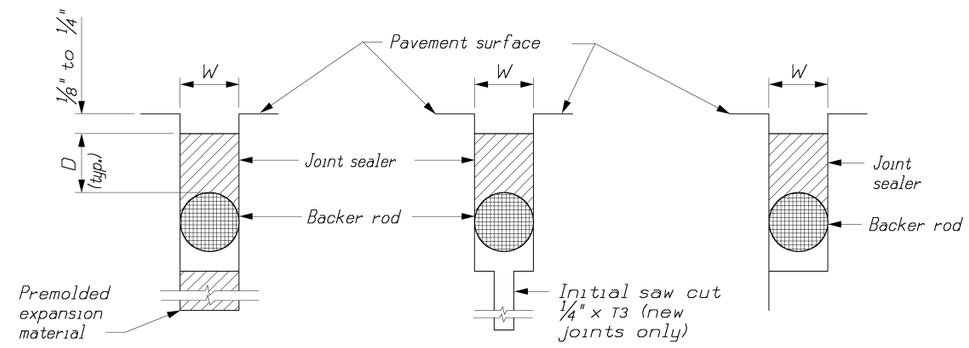

EXPANSION JOINT

CONTRACTION JOINT (Method A - Saw cut)

CONTRACTION JOINT (Method B - Formed Joint)

REINFORCED PORTLAND CEMENT CONCRETE PAVEMENT JOINT SEALING DETAILS

U.S. DEPARTMENT OF TRANSPORTATION
FEDERAL HIGHWAY ADMINISTRATION
FEDERAL LANDS HIGHWAY

U.S. CUSTOMARY STANDARD

PORTLAND CEMENT CONCRETE PAVEMENT JOINTS

STANDARD APPROVED FOR USE XX/XX	STANDARD
DRAFT: 9/2004	E501-2

9/20/2007 8:57:41 AM a:\dlf0001170\0\cad\plans\details\numbered-details\s07-s150102_us customary.dgn

NPS NO.	REG	STATE	PROJECT	SHEET NO.
412 / 41,911	NCR	MD	PRH-CHOH 102 (1)	S8

NOTE:

1. Drill holes for the dowels and tie bars simultaneously to the required depth using frame mounted drills which will maintain the drills parallel to profile and longitudinal joint.
2. See Standard 501-4 for pavement repair saw cuts for lift-out method.
3. Orient wire mesh so that the 12-inch dimension parallels the existing longitudinal joint.
4. An approved two-piece longitudinal tie device may be used in lieu of the #5 tie bars.
5. See Standard 501-1 for reinforcement for full depth concrete pavement repair.

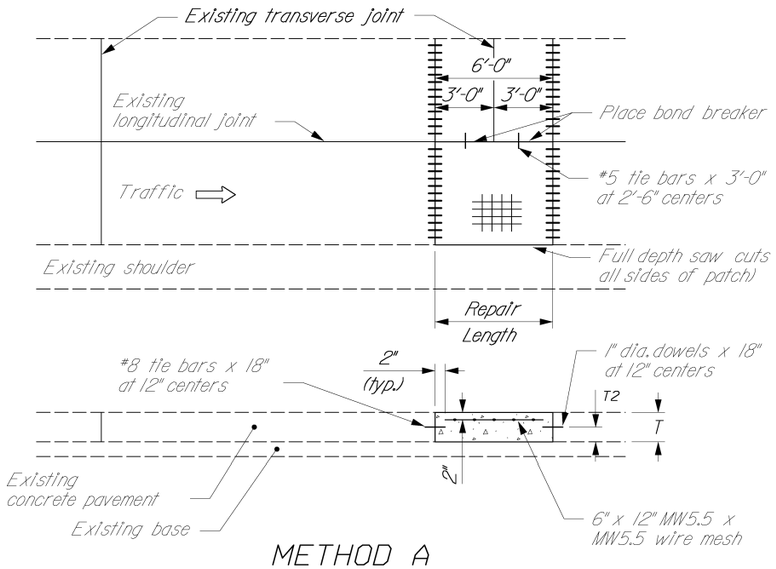

METHOD A

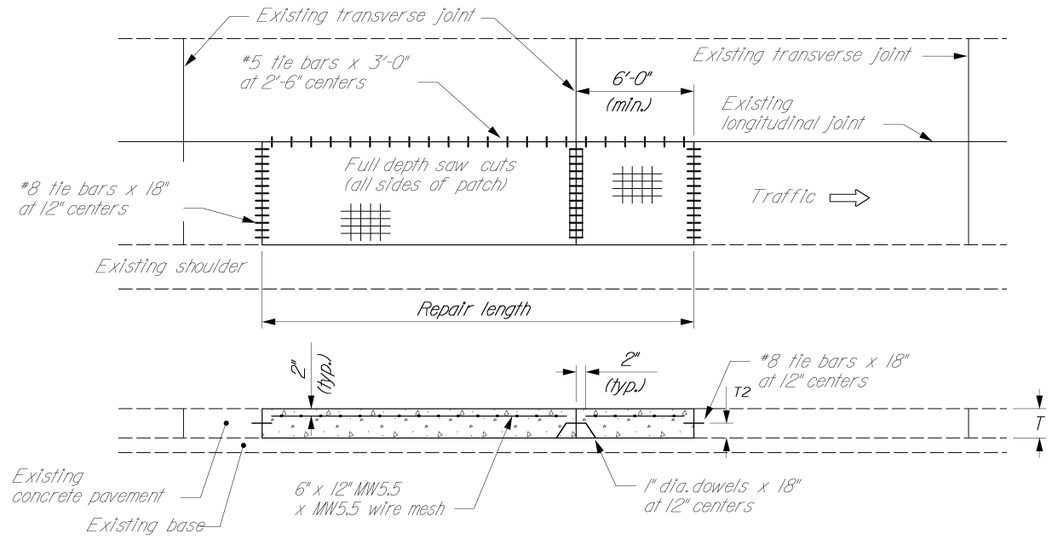

METHOD C

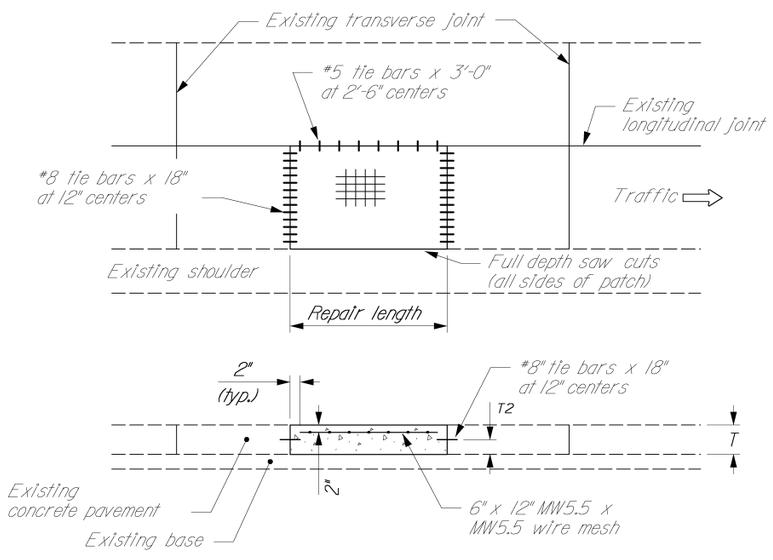

METHOD B

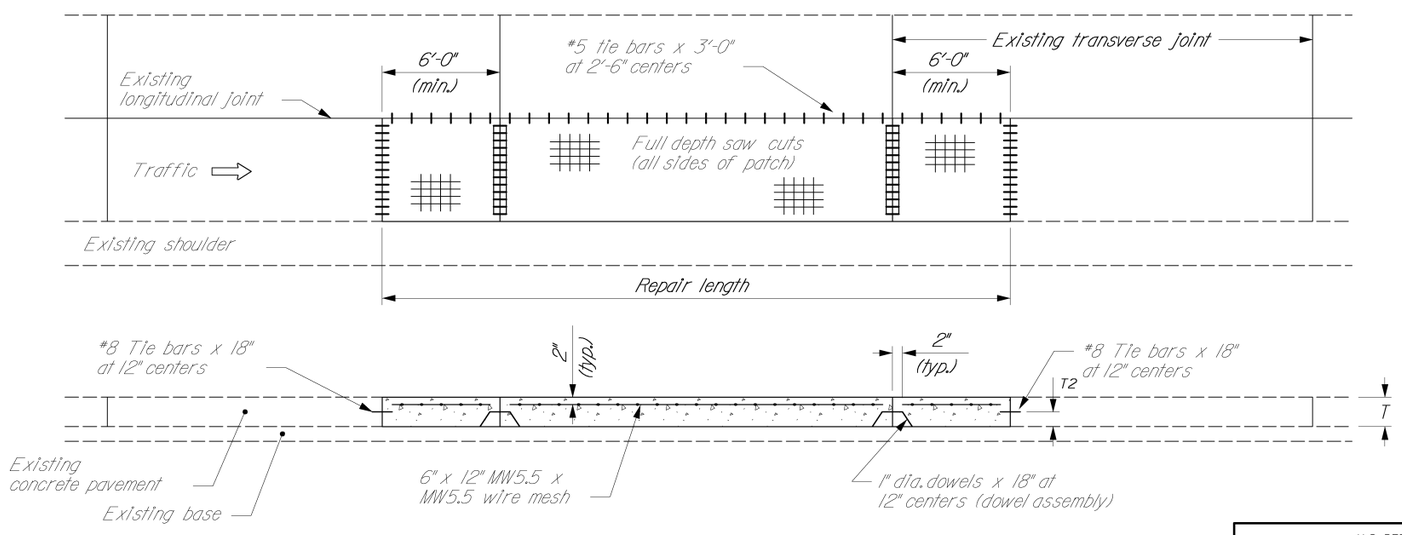

METHOD D

U.S. DEPARTMENT OF TRANSPORTATION
FEDERAL HIGHWAY ADMINISTRATION
FEDERAL LANDS HIGHWAY

U.S. CUSTOMARY STANDARD

CONCRETE PAVEMENT PATCHING

STANDARD APPROVED FOR USE XX/XX	STANDARD
DRAFT: 9/2004	E501-3

9/20/2007 8:57:41 AM o:\dlf000\lf70\0\cad\plans\details\numbered-details\s08-st501\03_us customary.dgn

NPS NO.	REG	STATE	PROJECT	SHEET NO.
412 / 41,911	NCR	MD	PRH-CHOH 102 (1)	S9

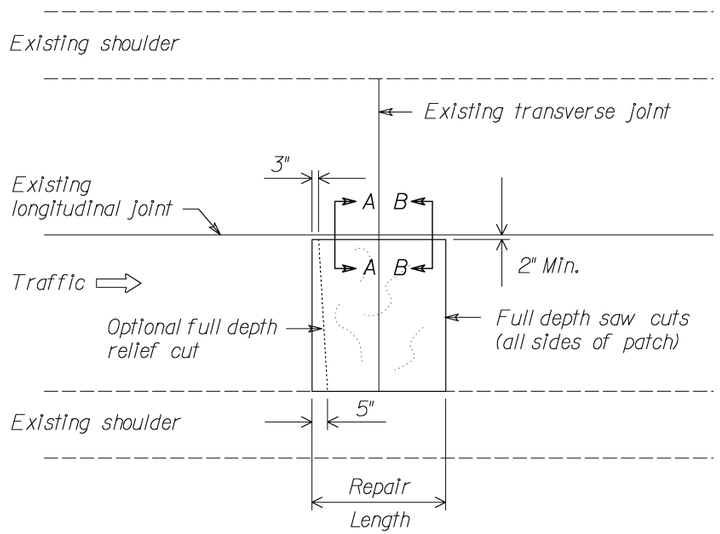

Notes:

1. Shoulder joints may be cut directly into the existing joint.
2. Make cuts running parallel and adjacent to a lane of traffic a minimum of 2-inches from the existing joint.
3. Saw cuts may be made into the shoulder.
4. If it is determined that the keyway is formed in the adjacent pavement section, the subsequent full depth saw cut may be made on the longitudinal joint.

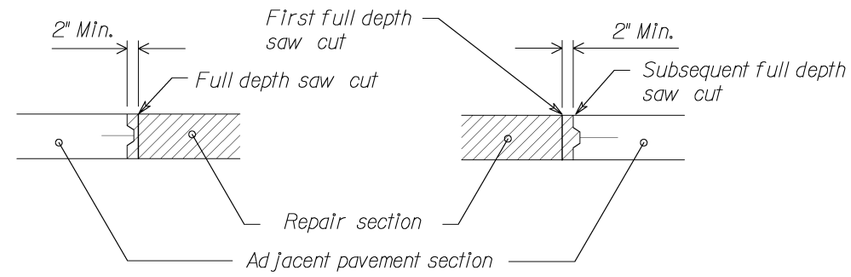

SECTION A-A

KEYWAY IN REPAIR SECTION

SECTION B-B

KEYWAY IN ADJACENT PAVEMENT SECTION

REINFORCED PORTLAND CEMENT CONCRETE PAVEMENT
SAW CUTS FOR LIFT OUT METHOD

U.S. DEPARTMENT OF TRANSPORTATION
FEDERAL HIGHWAY ADMINISTRATION
EASTERN FEDERAL LANDS HIGHWAY DIVISION

STANDARD

CONCRETE PAVEMENT REMOVAL METHODS

STANDARD APPROVED FOR USE XX/XX	STANDARD
REVISED: XX/XX	501-4

9/20/2007 8:57:42 AM c:\dlf0001\f001\cad\plans\details\numbered-details\s09-s150\x04.dgn

NPS NO.	REG	STATE	PROJECT	SHEET NO.
412 / 41,911	NCR	MD	PRH-CHOH 102 (1)	S10

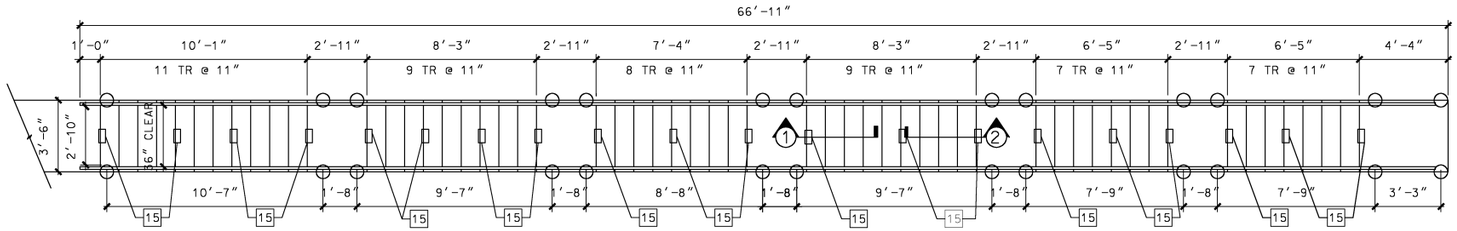

EXTERIOR STAIR PLAN
SCALE: 1/8" = 1'-0"

NOTE:
CONTRACTOR TO VERIFY GRADE ELEVATIONS IN FIELD PRIOR TO SHOP DRAWINGS SUBMISSION.

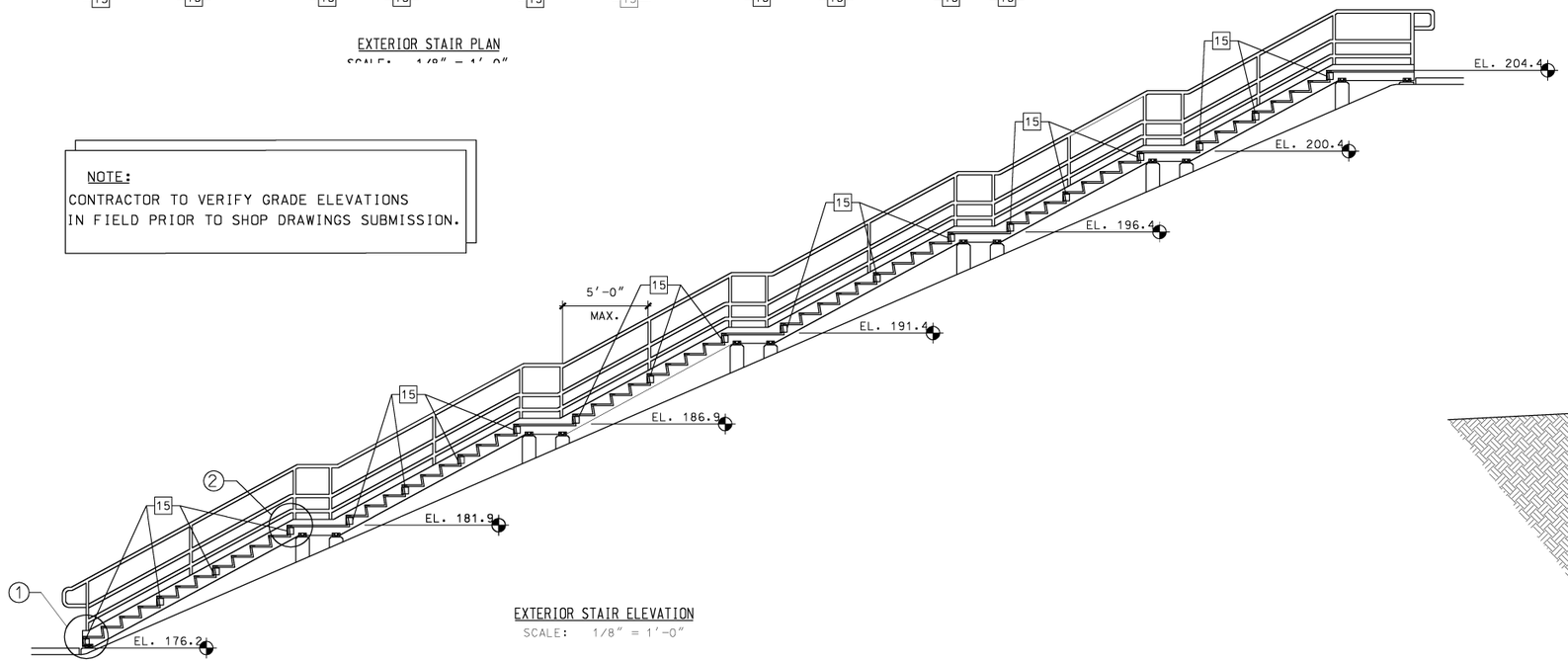

EXTERIOR STAIR ELEVATION
SCALE: 1/8" = 1'-0"

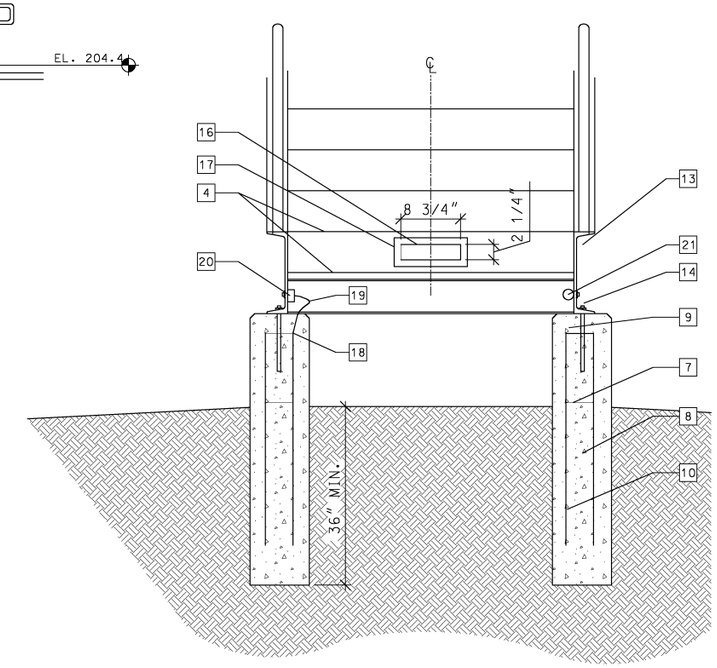

EXTERIOR DETAIL SECTION
SCALE: 1" = 1'-0"

CONSTRUCTION NOTES:

1. COMPRESSIBLE FILLER.
2. 4" CONCRETE SLAB ON 4" GRAVEL FILL w/ 6" x 6" 10-10 WWF. - SEE SITE PLAN
3. 12" ALUMN. CHANNEL STRINGER
4. 1 1/2" ALUMN. BAR GRATING PLATFORM AND TREADS.
5. CONTINUOUS 2" ALUMN. CHANNEL WELDED TO CHANNEL FRAMING.
6. NOT USED
7. # 3 TIES @ 10" OC.
8. 4 #5 VERTICAL BARS
9. 1/2" x 3/8" x 8" ALUMN. ANCHOR BOLTS, TYPICAL.
10. 8" DIA. CONC. FOOTING
11. BASE PLATE CLIP ANGLE TO STRINGER
12. 1 1/2" DIA. ALUMN TUBE RAILING/HANDRAIL
13. 5" ALUMN. CHANNEL
14. 6" ALUMN. CHANNEL
15. RECESSED STEP LIGHT
16. ROUGH-IN OPENING IS 2 1/4" x 8 3/4" FOR RECESSED STEP LIGHT
17. 1x1x1x3 ALUMN. CANNELS SLID ONTO STAIR RISER, SCREW THROUGH BODY OF LIGHT TO ATTCH TO STAIR RISER
18. EXOTHERMICALLY WELD #410 BARE COPPER GROUNDING CONDUCTOR TO REBAR
19. #410 BARE COPPER GROUNDING CONDUCTOR
20. COLDWELD OR APPROVED EQUAL CONNECTOR FOR BONDING ALUMINUM STAIR TO COPPER GROUNDING CONDUCTOR
21. PVC CONDUIT

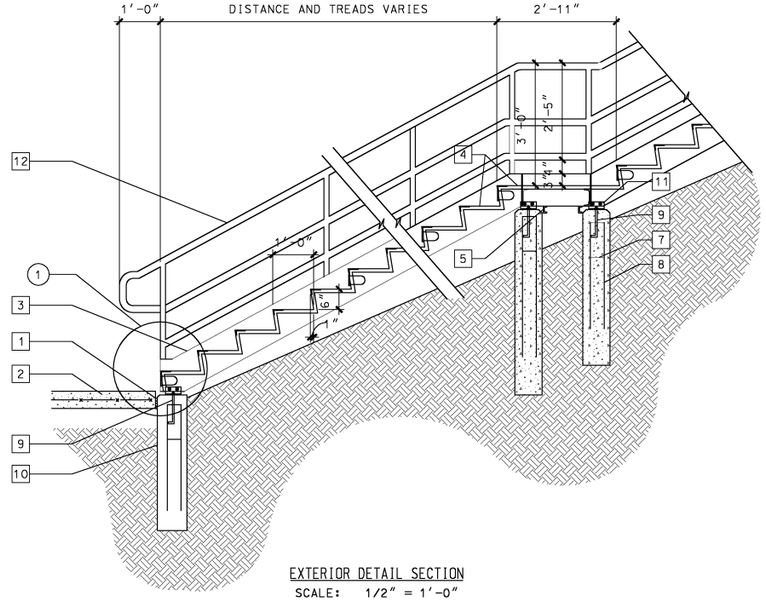

EXTERIOR DETAIL SECTION
SCALE: 1/2" = 1'-0"

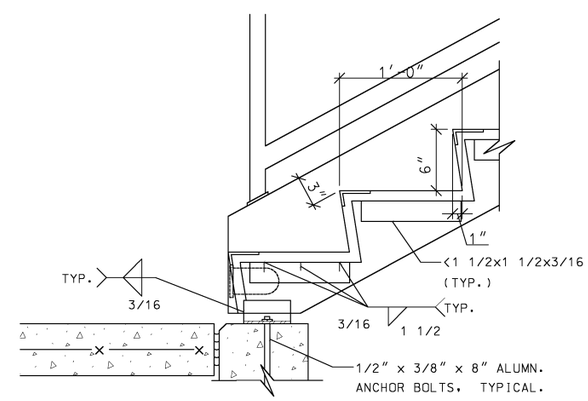

1 DETAIL SECTION
SCALE: 1 1/2" = 1'-0"

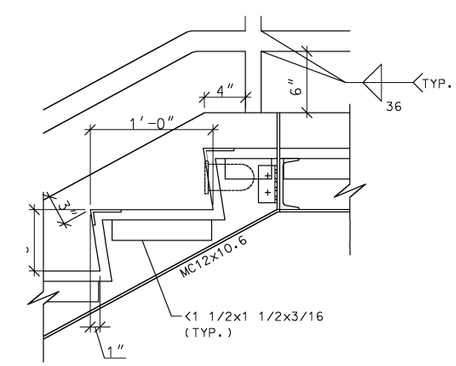

2 DETAIL SECTION
SCALE: 1 1/2" = 1'-0"

LIGHTING FIXTURE SCHEDULE

TYPE	DESCRIPTION	LAMP	VOLT	MOUNTING	MANUFACTURER
A	COMPACT FLUORESCENT STEP LIGHT WITH DIE-CAST LOUVERED ALUMINUM FACEPLATE	(1) 13W	120	SURFACE	LUMIERE ZUMA SERIES OR APPROVED EQUAL

U.S. DEPARTMENT OF TRANSPORTATION
FEDERAL HIGHWAY ADMINISTRATION
EASTERN FEDERAL LANDS HIGHWAY DIVISION

DETAIL

EXTERIOR STAIR PLAN, ELEVATION AND SECTION

DETAIL APPROVED FOR USE XX/XX

REVISED: XX/XX

DETAIL E555-A

1:29:50 PM 01/22/2008 O:\DIF0001170\NCAD\Plans\Details\Numbered-Details\S10-dfE616-A.dgn

NPS NO.	REG	STATE	PROJECT	SHEET NO.
412 / 41,911	NCR	MD	PRH-CHOH 102 (1)	S11

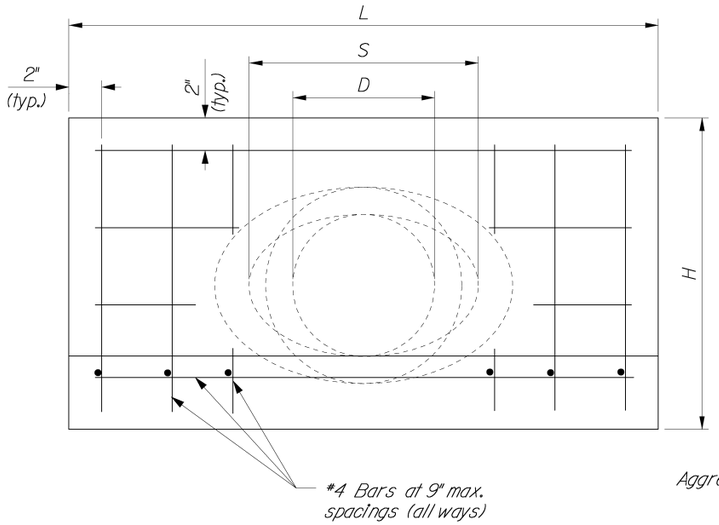

FRONT ELEVATION

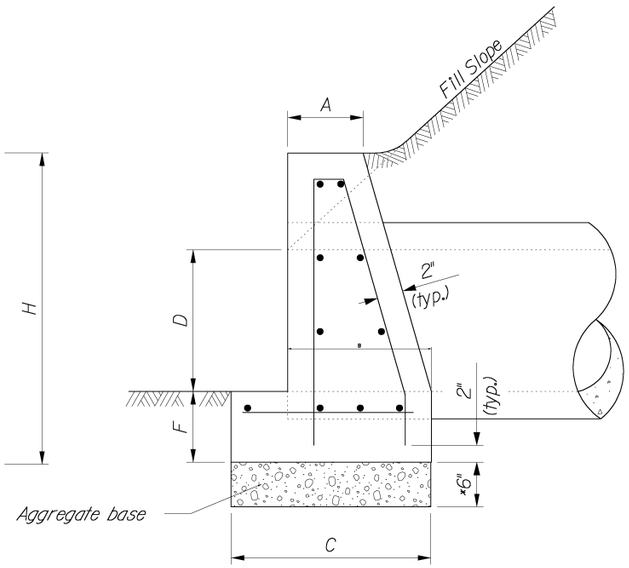

SIDE ELEVATION

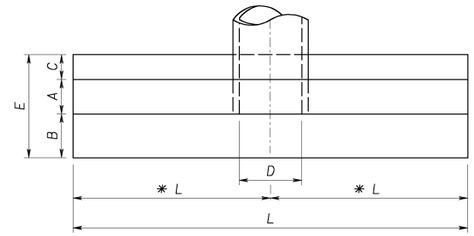

PLAN

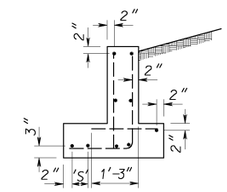

DISPOSITION OF BARS DETAIL

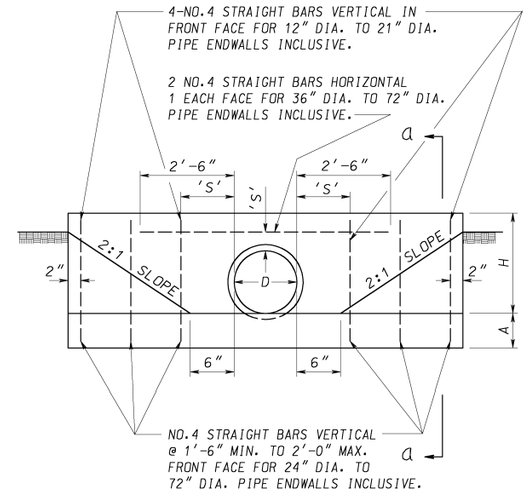

ELEVATION

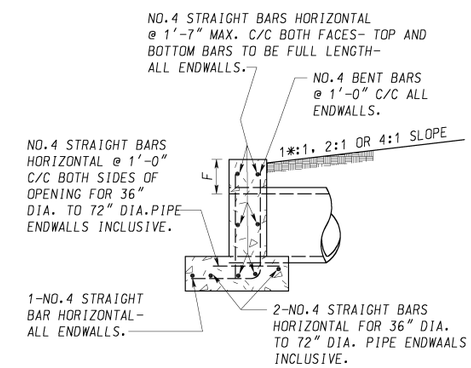

SECTION A-A

'S' DISTANCES

4" FOR 12" DIA. TO 21" DIA. PIPES INCLUSIVE.
6" FOR 24" DIA. TO 36" DIA. PIPES INCUSIVE.
8" FOR 42" DIA. TO 72" DIA. PIPES INCLUSIVE.

GENERAL NOTES

SPECIFICATIONS: LATEST S.H.A.
CONCRETE SHALL BE MIX NO.2
REINFORCING: DEFORMED STEEL BARS-NO.4
CHAMFER: ALL EXPOSED EDGES 1"x1" OR AS DIRECTED

QUANTITIES FOR ESTIMATING PURPOSES ONLY

OPENING		DIMENSIONS							QUANTITIES	
D INCHES	AREA SQ.FT.	A	B	C	E	F	H	L	CONC. C.Y.	STEEL LBS.
24	3.14	9"	14"	6"	2'-5"	9"	2'-9"	11'-6"	1.56	80

HEADWALL FOR CIRCULAR PIPE

DIAMETER OF PIPE CULVERT	6"	15"	18"	21" or 24"	27" or 30"	33" or 36"
A	0'-6"	0'-8"	0'-9"	0'-11"	1'-0"	1'-0"
B	0'-9"	1'-1"	1'-3"	1'-6"	1'-9"	2'-0"
C	1'-2"	1'-7"	1'-9"	2'-2"	2'-6"	2'-9"
D	1'-0"	1'-3"	1'-6"	2'-0"	2'-6"	3'-0"
F	0'-6"	0'-8"	0'-8"	0'-9"	0'-9"	0'-9"
H	2'-0"	2'-11"	3'-2"	3'-9"	4'-3"	4'-9"
L	3'-8"	5'-0"	6'-0"	8'-0"	10'-0"	12'-0"
CUBIC YARDS OF CONCRETE						
Conc. Pipe	0.241	0.492	0.697	1.319	2.067	2.947
C.M. Pipe	0.257	0.521	0.739	1.398	2.198	3.145

NOTE:

1. All headwalls are oriented parallel to the roadway centerline unless otherwise indicated in the plans or by the CO.
2. When pipes are on a skew, adapt and lengthen headwalls as directed.
3. Chamfer all exposed corners not rounded to ¾".
4. Quantities shown are for one headwall with pipe at right angles.
5. Construct headwalls using dimensions shown under values for IV:1.5H slope, unless otherwise designated by the CO.

HEADWALL FOR ELLIPTICAL PIPE

SIZE OF ELLIPTICAL PIPE CULVERT (SPAN x RISE)	23" x 14"	30" x 19"	34" x 22"	38" x 24"	42" x 27"	45" x 29"	49" x 32"	53" x 34"	60" x 38"	68" x 43"
A	0'-8"	0'-9"	0'-10"	0'-10"	0'-11"	1'-0"	1'-0"	1'-0"	1'-0"	1'-0"
B	1'-2"	1'-5"	1'-6"	1'-8"	1'-9"	1'-10"	1'-11"	1'-11"	1'-11"	2'-0"
C	1'-8"	1'-11"	2'-1"	2'-4"	2'-5"	2'-7"	2'-8"	2'-9"	3'-3"	3'-6"
D	1'-2"	1'-7"	1'-10"	2'-0"	2'-3"	2'-5"	2'-8"	2'-10"	3'-2"	3'-7"
F	0'-8"	0'-8"	0'-9"	0'-9"	0'-9"	0'-9"	0'-9"	0'-9"	0'-9"	0'-9"
H	2'-10"	3'-3"	3'-7"	3'-9"	4'-0"	4'-2"	4'-5"	4'-7"	4'-11"	5'-4"
L	5'-5"	7'-2"	8'-6"	9'-2"	10'-2"	10'-11"	12'-1"	12'-11"	13'-0"	13'-0"
S	1'-11"	2'-6"	2'-10"	3'-2"	3'-6"	3'-9"	4'-1"	4'-5"	5'-0"	5'-8"
CUBIC YARDS OF CONCRETE										
Conc. Pipe	0.502	0.855	1.236	1.500	1.811	2.101	2.512	2.801	2.969	2.904

MD STANDARD NO. 354.01 TYPE C ENDWALL METAL OR CONCRETE ROUND PIPE

NO SCALE

U.S. DEPARTMENT OF TRANSPORTATION
FEDERAL HIGHWAY ADMINISTRATION
FEDERAL LANDS HIGHWAY

U.S. CUSTOMARY STANDARD

CONCRETE HEADWALL FOR SMALL PIPE CULVERT

STANDARD APPROVED FOR USE 6/2005

REVISED: XX/XX

STANDARD 601-4A

9/20/2007 8:57:44 AM a:\dlf00011f\0\0\cad\plans\details\numbered-details\s11-st601d4_us customary.dgn

NPS NO.	REG	STATE	PROJECT	SHEET NO.
412 41,911	NCR	MD	PRH-CHOH 102 (1)	S12

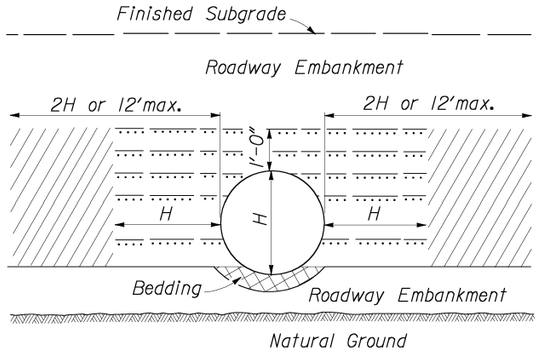

ABOVE NATURAL GROUND

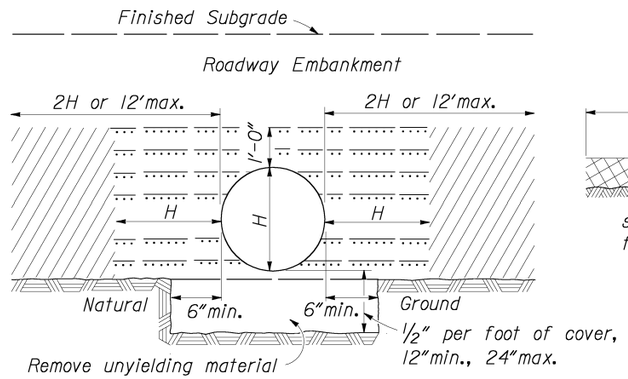

ON UNYIELDING MATERIAL

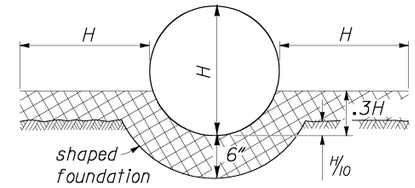

CLASS B BEDDING

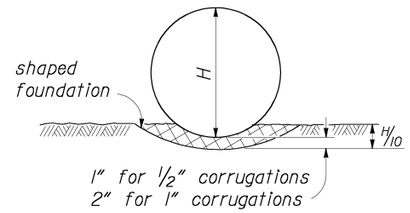

CLASS C BEDDING

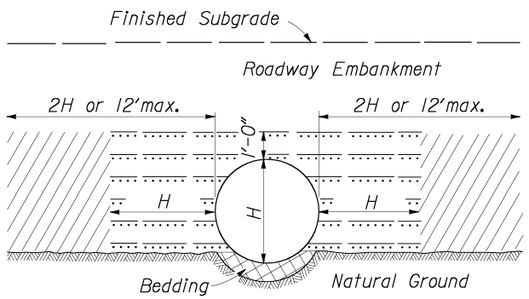

ON NATURAL GROUND

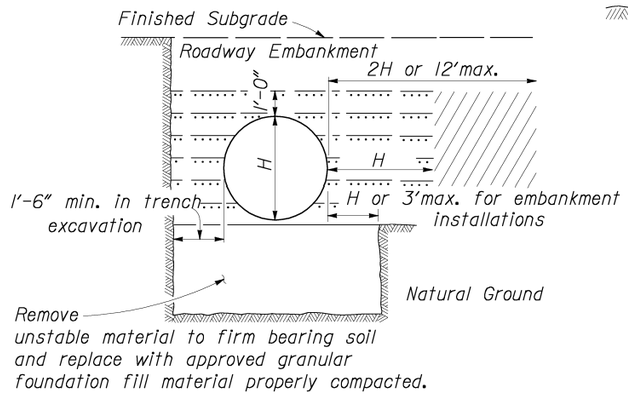

ON UNSTABLE MATERIAL

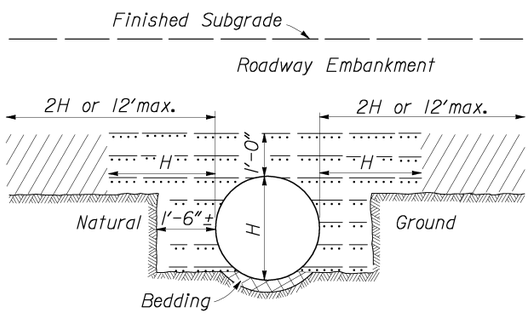

ABOVE AND BELOW
NATURAL GROUND

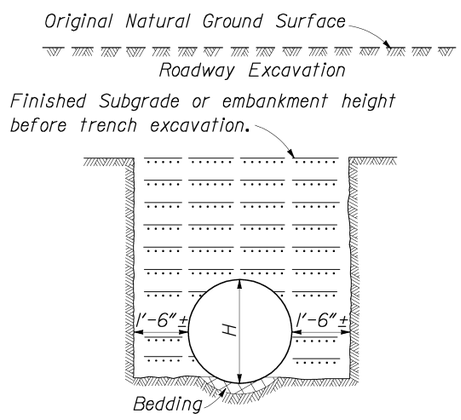

BELOW NATURAL GROUND OR
TRENCH EXCAVATION IN EMBANKMENT

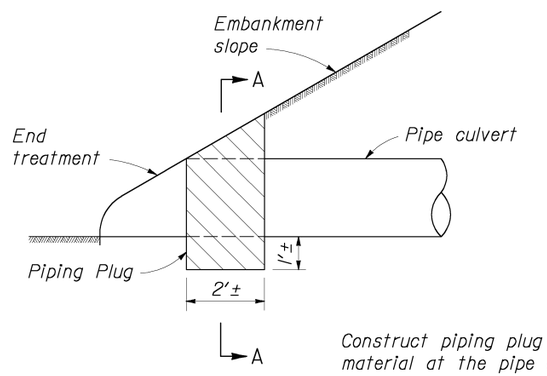

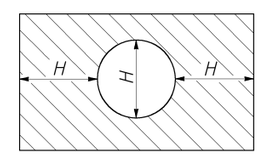

SECTION A-A

Construct piping plug of impermeable backfill
material at the pipe culvert inlet where
granular material is used for backfill.

PIPING PLUG

NOTES:

1. When directed, camber pipe culverts upward from a chord through the inlet and outlet inverts an ordinate amount equal to 1% of the pipe length. Develop camber on a parabolic curve. If the midpoint elevation on the parabolic curve as designed exceeds the elevation of the inlet invert, reduce the amount of camber or increase the pipe culvert gradient.

2. H equals the diameter of all round pipe culverts or the rise dimension of all pipe arch culverts.

3. Bed pipe culverts 48 inches and larger in diameter and pipe arch culverts 38 inches and greater in rise in Class B Bedding. Bed smaller pipe culverts in Class B or C Bedding.

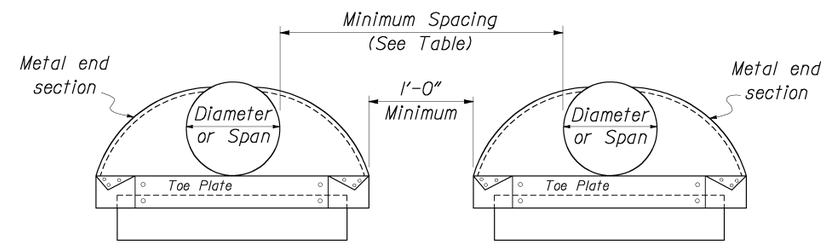

MINIMUM SPACING	
DIAMETER or SPAN INCHES	SPACING INCHES
UP to 48	24
48 and UP	1/2 Diameter or Span or 36 whichever is less

MULTIPLE PIPE INSTALLATION

Bedding Material

Embankment material placed in layers not exceeding 6" compacted depth.

Approved granular material or fine compactable soil placed in layers not exceeding 6" compacted depth.

NO SCALE

U.S. DEPARTMENT OF TRANSPORTATION
FEDERAL HIGHWAY ADMINISTRATION
EASTERN FEDERAL LANDS HIGHWAY DIVISION

STANDARD

METAL AND PLASTIC PIPE CULVERT BEDDING

STANDARD APPROVED FOR USE XX/XX

REVISED: 4/29/02

STANDARD 602-3

9/20/2007 8:57:45 AM a:\dlf0001\f0\0\cad\plans\details\numbered-details\s12-s1602x03.dgn

NPS NO.	REG	STATE	PROJECT	SHEET NO.
412 / 41,911	NCR	MD	PRA-CHOH 102 (1)	S13

CONCRETE ROUND PIPE CULVERT

FILL HEIGHT AND PIPE CLASS TABLE

PIPE SIZE DIAMETER INCHES	MINIMUM COVER INCHES	EMBANKMENT CLASS II	EMBANKMENT CLASS III	EMBANKMENT CLASS IV	EMBANKMENT CLASS V	TRENCH CLASS II	TRENCH CLASS III	TRENCH CLASS IV	TRENCH CLASS V
		MAXIMUM FILL HEIGHT ABOVE TOP OF PIPE IN FEET							
12	12	11	11	16	23	18	18	26	37
18	12	10	10	25	39	14	14	31	45
24	12	11	11	15	31	15	15	22	40
30	12	9	13	16	35	13	17	20	46
36	12	9	9	20	41	11	14	26	56
48	12	12	14	26	44	16	17	31	50
60	12	15	17	28	44	15	20	32	50
72	12	13	17	31	41	16	20	35	49
84	12	13	19	31		15	23	37	
96	12	13	20			16	24		
108	12	16	20			19	26		

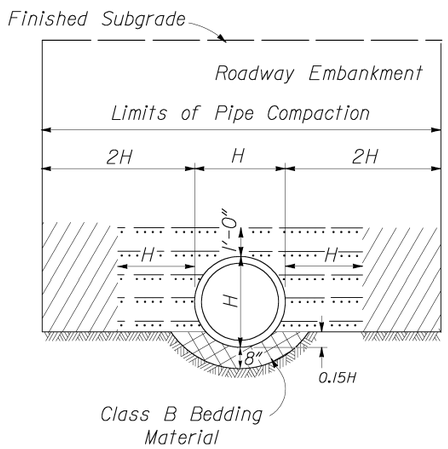

EMBANKMENT INSTALLATION

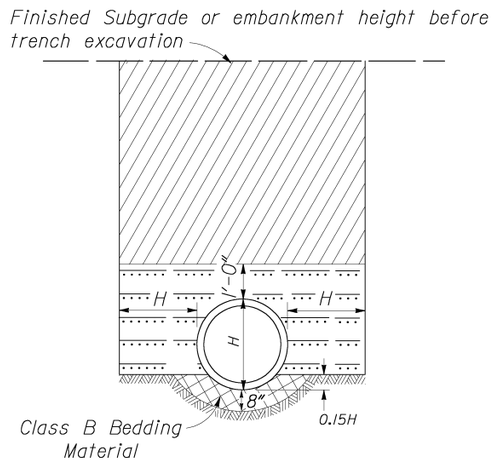

TRENCH INSTALLATION

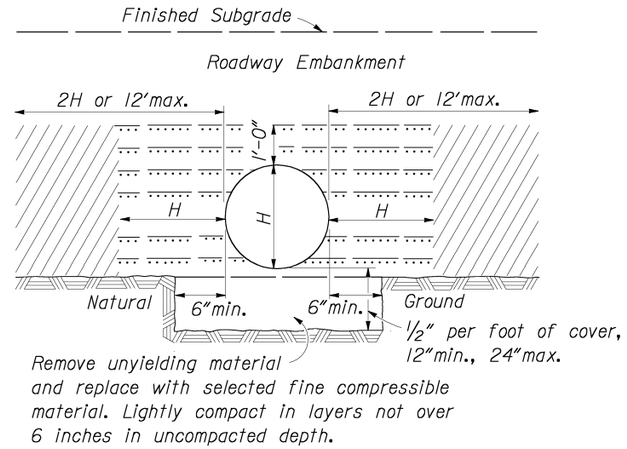

ON UNYIELDING MATERIAL

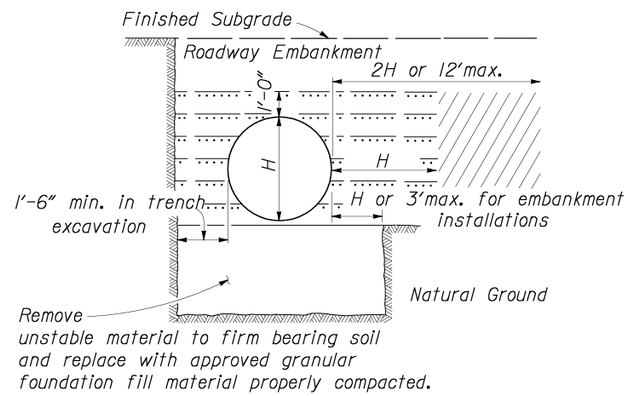

ON UNSTABLE MATERIAL

NOTE:

1. When directed, camber pipe culverts upward from a chord through the inlet and outlet inverts an ordinate amount equal to 1% of the pipe length. Develop camber on a parabolic curve. If the midpoint elevation on the parabolic curve as designed exceeds the elevation of the inlet invert, reduce the amount of camber or increase the pipe culvert gradient.
2. Measure minimum cover from the top of the pipe culvert to the subgrade for flexible pavements, and to the top of the pavement for rigid pavements. Measure maximum fill height from the top of the pipe to the top of the pavement for both flexible and rigid pavements.
3. Pipe compaction limits shown are for pipe installation in an embankment. For pipe installation in a trench, the compaction limits shall be the walls of the trench.
4. When grades exceed 10%, install supplemental concrete pipe ties on pipe culvert or install bell and spigot pipe.
5. Maximum fill heights for pipe culvert installations may be increased on approval of site-specific structural pipe designs meeting the criteria of AASHTO Standard Specifications for Highway Bridges.

LEGEND:

- Bedding Material
- Approved granular material or fine compactable soil placed in layers not exceeding 6" compacted depth.
- Embankment material placed in layers not exceeding 6"compacted depth.
- Impermeable backfill material

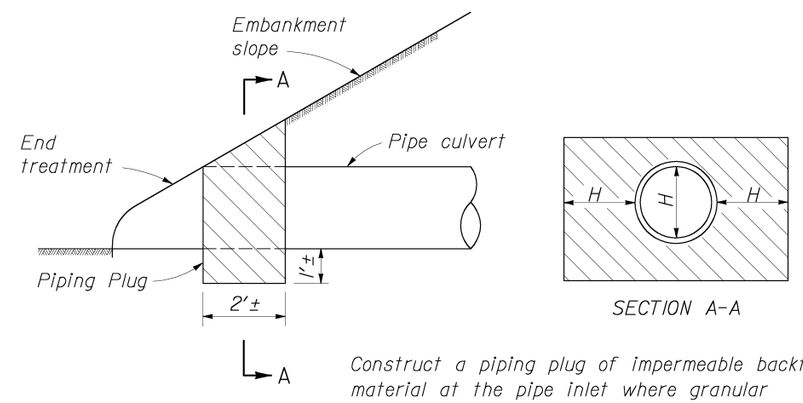

Construct a piping plug of impermeable backfill material at the pipe inlet where granular material is used for backfill.

PIPING PLUG

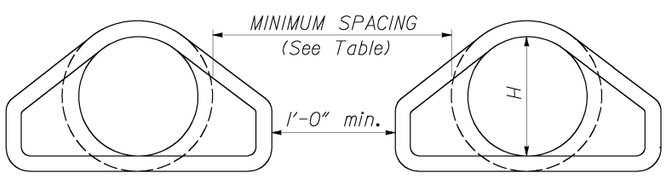

MINIMUM SPACING		
DIAMETER INCHES	EMBANKMENT	TRENCH
12-36	15"	2H
36-96	H/2	72"
OVER 96	48"	72"

MULTIPLE ROUND PIPE INSTALLATION

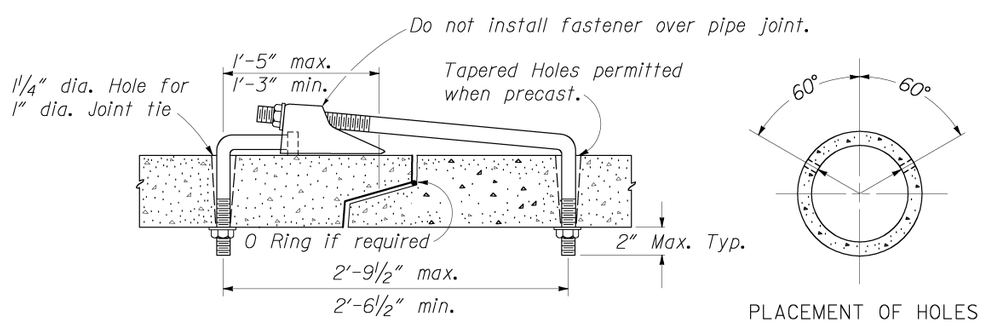

PLACEMENT OF HOLES

SUPPLEMENTAL CONCRETE PIPE TIE

NO SCALE

U.S. DEPARTMENT OF TRANSPORTATION
FEDERAL HIGHWAY ADMINISTRATION
FEDERAL LANDS HIGHWAY

DETAIL

CONCRETE PIPE CULVERT INSTALLATION

DETAIL APPROVED FOR USE XX/XX

REVISED: 4/29/02

DETAIL E602-7

9/20/2007 8:57:46 AM a:\dlf0001lf0\0\cad\plans\details\numbered-details\s13-df602x07.dgn

NPS NO.	REG	STATE	PROJECT	SHEET NO.
412 / 41,911	NCR	MD	PRH-CHOH 102 (1)	S14

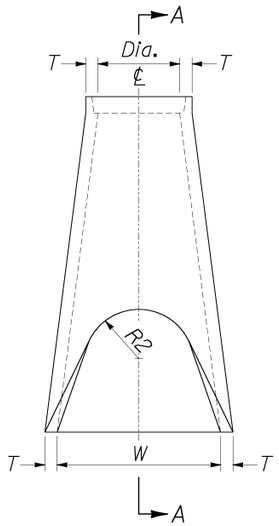

PLAN

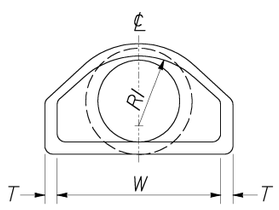

ELEVATION

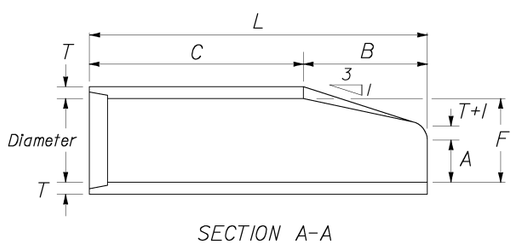

SECTION A-A

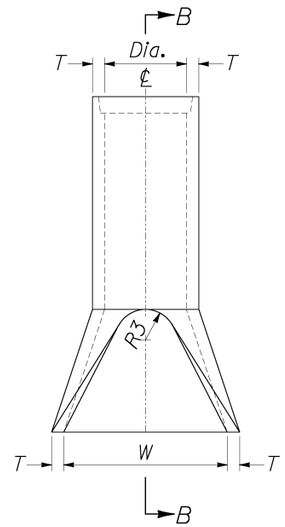

PLAN

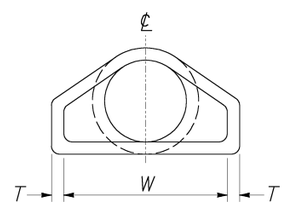

ELEVATION

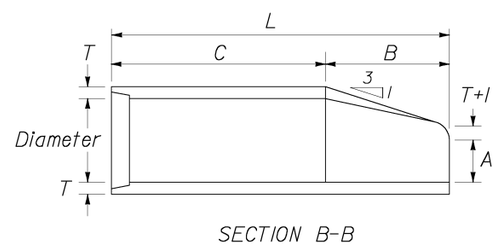

SECTION B-B

NOTES:

1. Variations in design and dimensions are permitted to allow for manufacturer's standards.
2. Fabricate the outlet end section with a groove end and the inlet end section with a tongue end.
3. Warp embankment slopes to match the slope of the flared end section.

END SECTIONS FOR ROUND PIPE CULVERT

PIPE SIZE	DIMENSIONS									
DIAMETER INCHES	T INCHES	A INCHES	B INCHES	C INCHES	L INCHES	W INCHES	F INCHES	R1 INCHES	R2 INCHES	R3 INCHES
12	2	4	24	48 7/8	72 7/8	24	13	10 1/8	9	4
15	2 1/4	6	27	46	73	30	16	12 1/2	11	6
18	2 1/2	9	27	46	73	36	19	15 1/2	12	7 1/2
21	2 3/4	9	36	37	73	42	22	16 1/2	13	5
24	3	9 1/2	43 1/2	30	73 1/2	48	25	16 13/16	14	8
27	3 1/4	10 1/2	48	25 1/2	73 1/2	54	28	--	14 1/2	9
30	3 1/2	12	54	19 3/4	73 3/4	60	31	18 1/2	15	8
33	3 3/4	13 1/2	58 1/2	37 1/2	96	66	34	23 3/4	17 1/2	9
36	4	15	63	33	96	72	37	23 3/16	20	11
42	4 1/2	21	63	33	96	78	43	--	22	11
48	5	24	72	24	96	84	49	--	22	12

NO SCALE

U.S. DEPARTMENT OF TRANSPORTATION
FEDERAL HIGHWAY ADMINISTRATION
EASTERN FEDERAL LANDS HIGHWAY DIVISION

STANDARD

CONCRETE END SECTION FOR ROUND PIPE

STANDARD APPROVED FOR USE --/---

REVISED:

STANDARD 602-8

9/20/2007 8:57:48 AM a:\dlf0001\f10\0\road\plans\details\numbered-details\s14-st602x08.dgn

NPS NO.	REG	STATE	PROJECT	SHEET NO.
412 / 41,911	NCR	MD	PRH-CHOH 102 (1)	S15

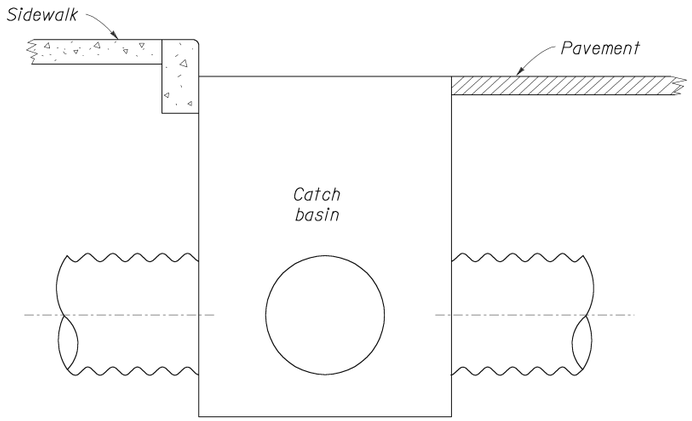

TYPICAL INSTALLATION
CURB SECTION

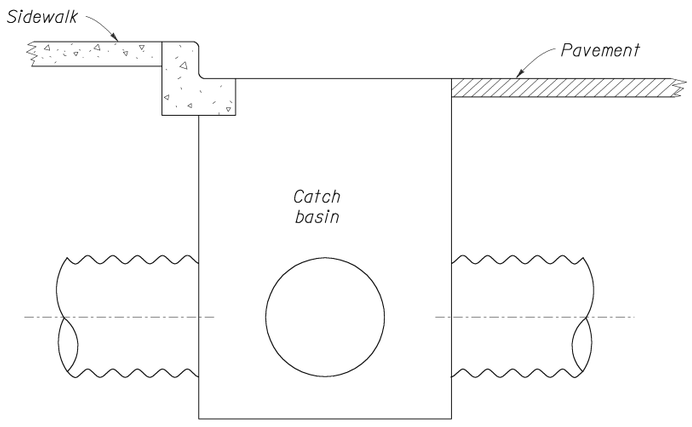

TYPICAL INSTALLATION
CURB AND GUTTER SECTION

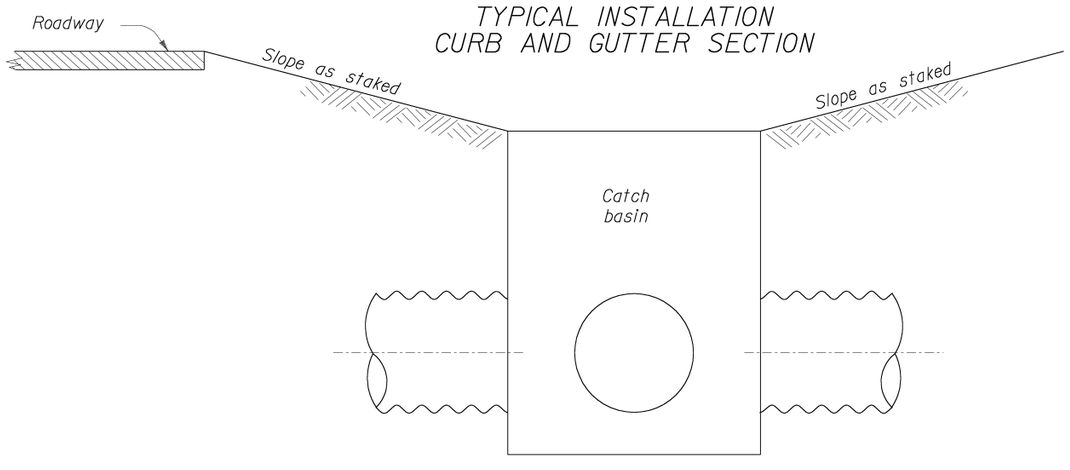

TYPICAL INSTALLATION
DITCH SECTION

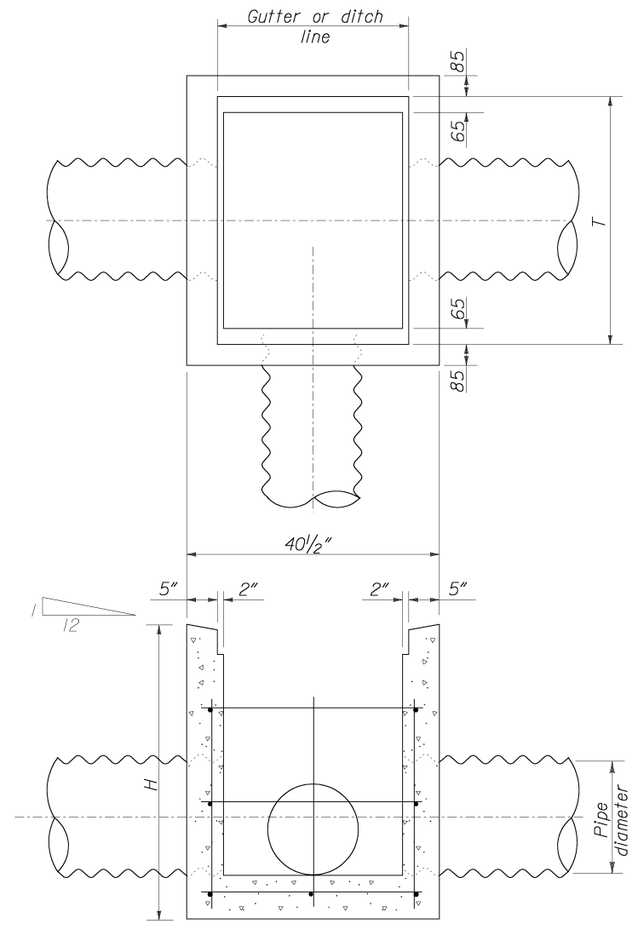

All reinforcing steel
#4 at 12"±.
Bend to clear pipe.

INLET DETAIL

NOTES:

1. CONCRETE: Chamfer exposed edges ¾" unless otherwise shown. Give all concrete surfaces a Class 1 finish.
2. The minimum concrete cover to the face of any bar is 2" unless otherwise shown.
3. See Standard 604-2 for Type A Frame and Grate and Standard 604-3 for Type B Frame and Grate.

CONCRETE CATCH BASINS			
PIPE SIZE DIAMETER	DIMENSIONS (INCHES)		
	DEPTH	FRAME AND GRATE	
		TYPE A	TYPE B
	H	T	T
12"	36	31	31
18"	36	31	31
24"	48	40	40
30"	48	49	50
36"	53	58	59
42"	59	67	66
48"	65	76	76

CONCRETE CATCH BASINS				
TABLE OF ESTIMATED QUANTITIES				
PIPE SIZE DIAMETER	CONCRETE ft^3	MASS (pounds)		
		REINFORCING STEEL	FRAME AND GRATE	
			TYPE A	TYPE B
12"	21.2	52.9	216	238.1
18"	21.2	52.9	216	238.1
24"	28.3	81.6	271	313.0
30"	31.8	92.6	326	390.2
36"	42.4	101.4	383.6	465.2
42"	49.4	130.1	438.7	579.8
48"	60.0	149.9	496.0	654.8

NO SCALE

U.S. DEPARTMENT OF TRANSPORTATION
FEDERAL HIGHWAY ADMINISTRATION
EASTERN FEDERAL LANDS HIGHWAY DIVISION

STANDARD

CATCH BASIN
TYPE 1

STANDARD APPROVED FOR USE XX/XX

REVISED: XX/XX

STANDARD
604-1

9/20/2007 8:57:49 AM o:\df0001r00\cad\plans\details\numbered-details\s15-st604x01.dgn

NPS NO.	REG	STATE	PROJECT	SHEET NO.
412 / 41,911	NCR	MD	PRH-CHOH 102 (1)	S16

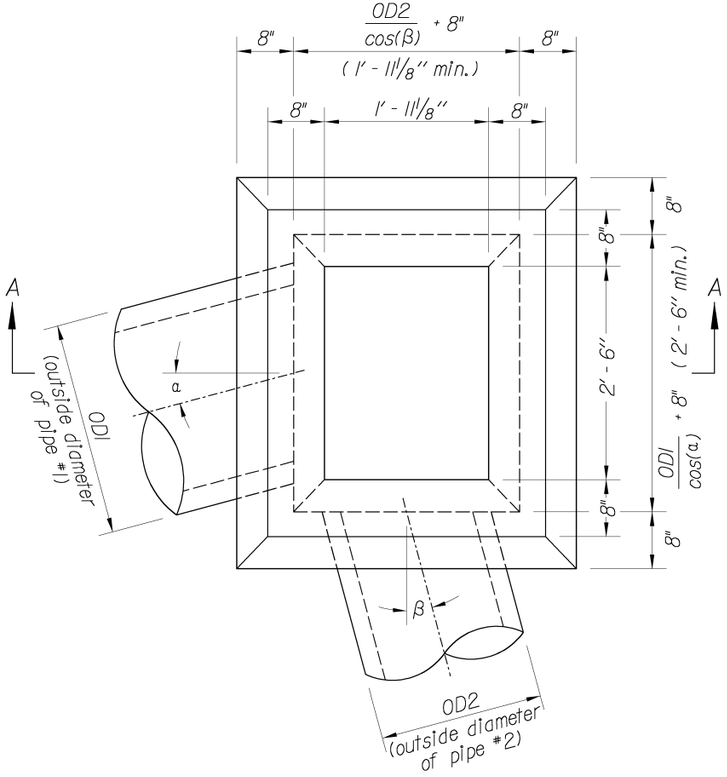

INLET, TYPE 6A

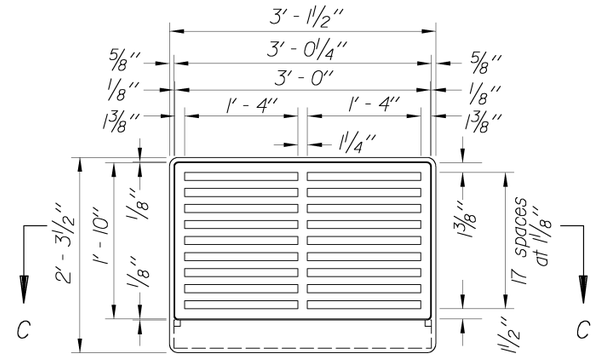

METAL FRAMES AND GRATINGS TYPE 6A

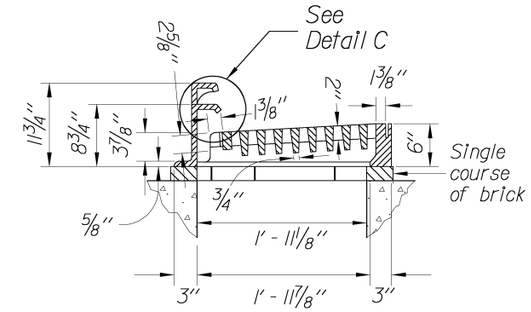

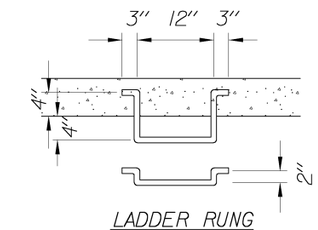

LADDER RUNG

3/4"ø or 3/4"□ Steel or Wrought Iron to be used where depth exceeds 4'-0"

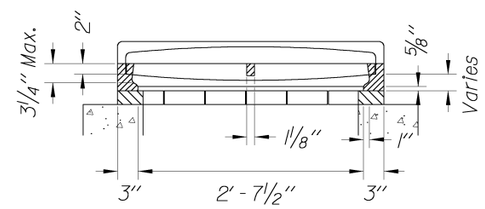

SECTION C-C

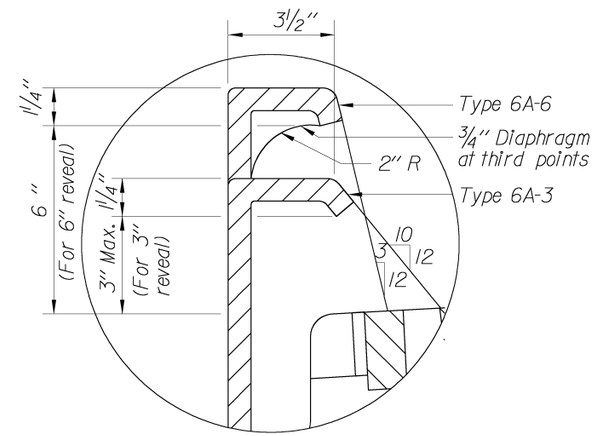

DETAIL C

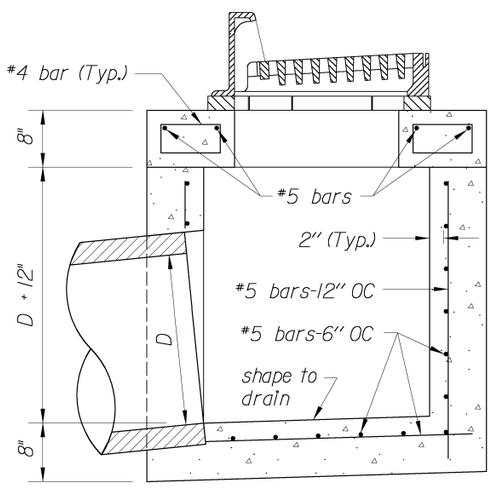

Limited Headroom
SECTION A-A

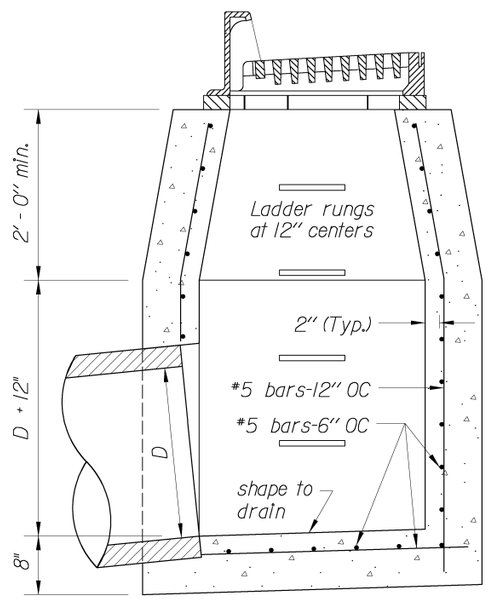

Ample Headroom
SECTION A-A

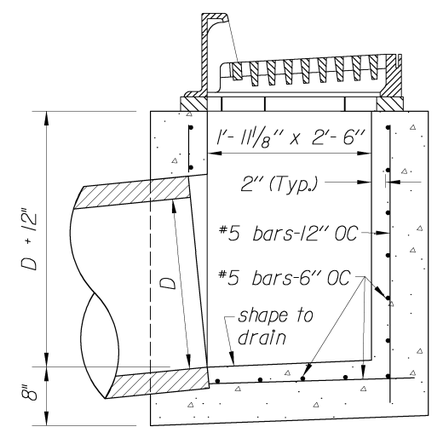

For minimum inside inlet dimensions only
SECTION A-A

Notes:

1. At the option of the Contractor walls less than 4 feet may be of concrete as shown.
2. Construct Type A inlets for pipes 24 inch and larger "For Ample Headroom", unless otherwise directed by the CO.
3. Construct inlets parallel to the roadway centerline and grade. Adapt inlets as directed by the CO.
4. For frames and gratings minor variations in design and dimensions are permitted to allow manufacturers standards.

U.S. DEPARTMENT OF TRANSPORTATION
FEDERAL HIGHWAY ADMINISTRATION
EASTERN FEDERAL LANDS HIGHWAY DIVISION

STANDARD

INLET, TYPE 6A

STANDARD APPROVED FOR USE XX/XX

REVISED: XX/XX

STANDARD 604-5

9/20/2007 8:57:50 AM a:\df0001\f0\0\cad\plans\details\numbered-details\s16-d604x05.dgn

NPS NO.	REG	STATE	PROJECT	SHEET NO.
412 / 41,911	NCR	MD	PRA-CHOH 102 (1)	S17

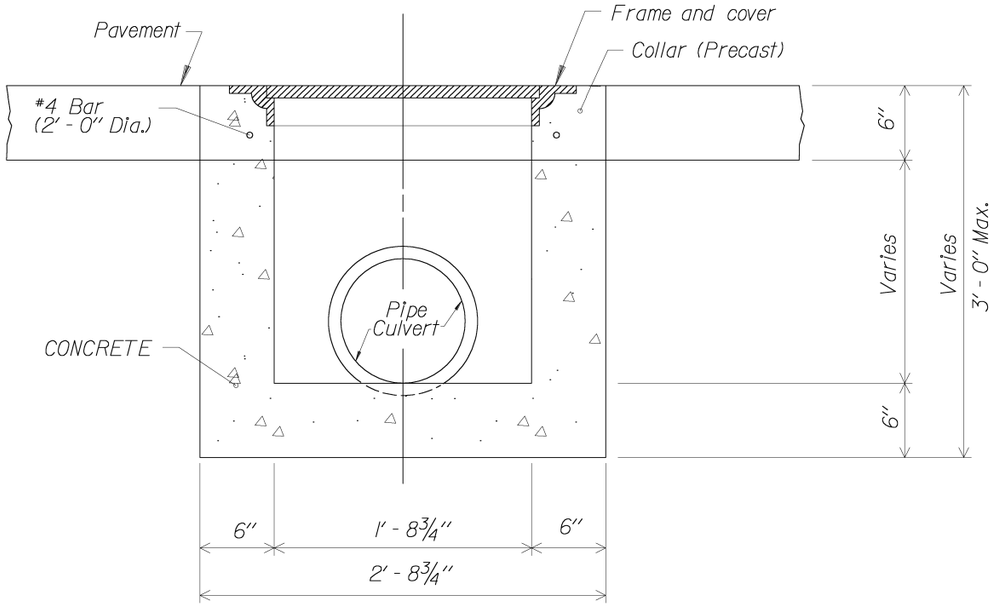

SECTION A-A

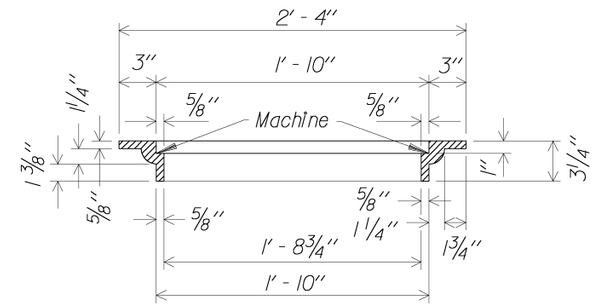

SECTION B-B

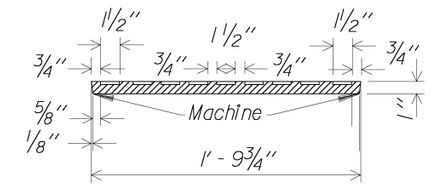

SECTION C-C

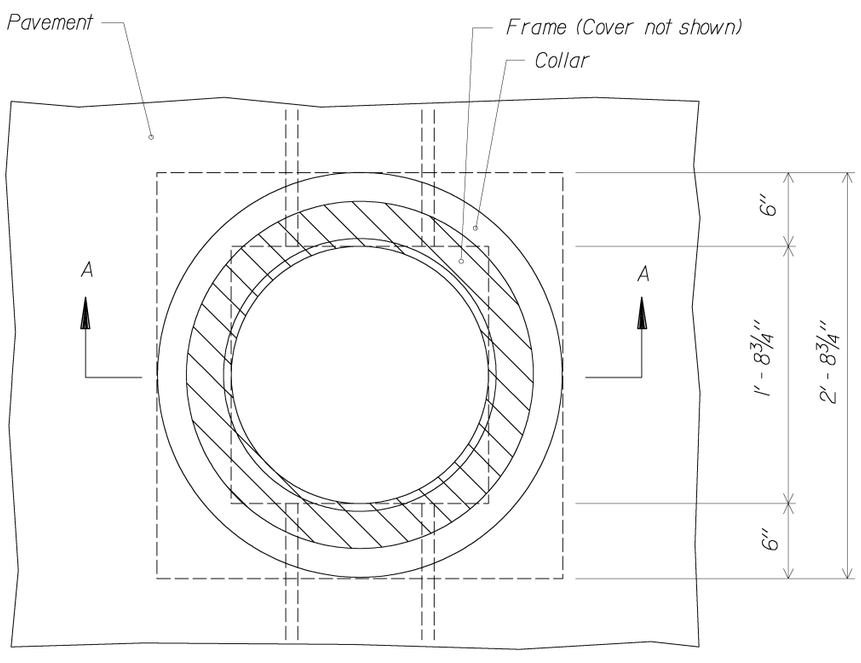

PLAN

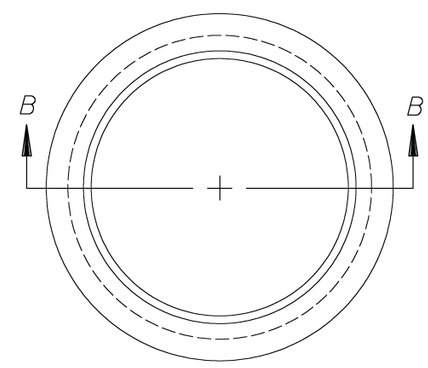

FRAME

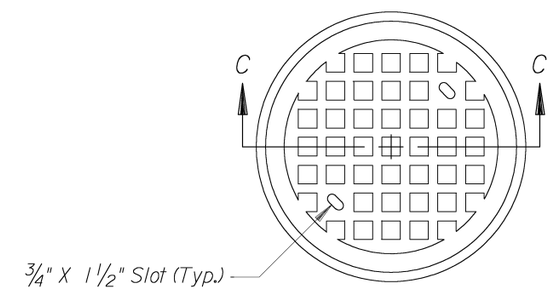

COVER

Approximate Weight
Cast Iron
Frame 86 ± 4 Lbs.
Cover 83 ± 4 Lbs.

Notes:

1. Frame and cover dimensions may vary slightly to allow manufacturer's standards.

U.S. DEPARTMENT OF TRANSPORTATION
FEDERAL HIGHWAY ADMINISTRATION
FEDERAL LANDS HIGHWAY

STANDARD

MANHOLE

STANDARD APPROVED FOR USE --/----

REVISED:

STANDARD
604-9

9/20/2007 8:57:50 AM a:\dlf0001lf0\0\cad\plans\details\numbered-details\s17-st604x09.dgn

NPS NO.	REG	STATE	PROJECT	SHEET NO.
412 / 41,911	NCR	MD	PRA-CHOH 102 (1)	S18

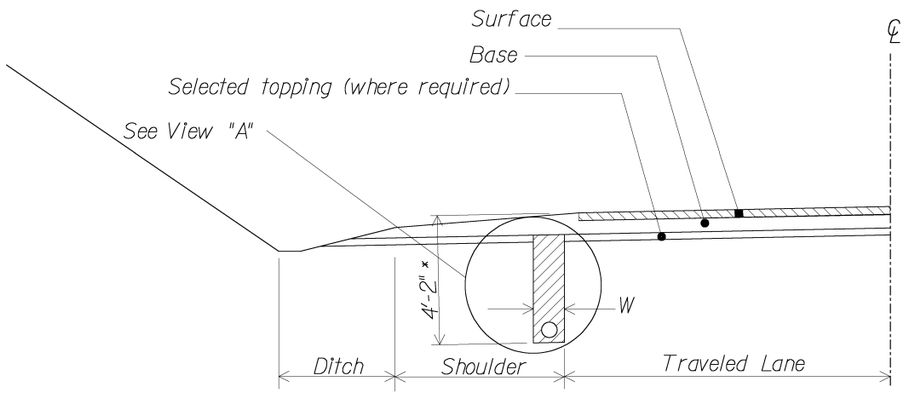

SHOULDER

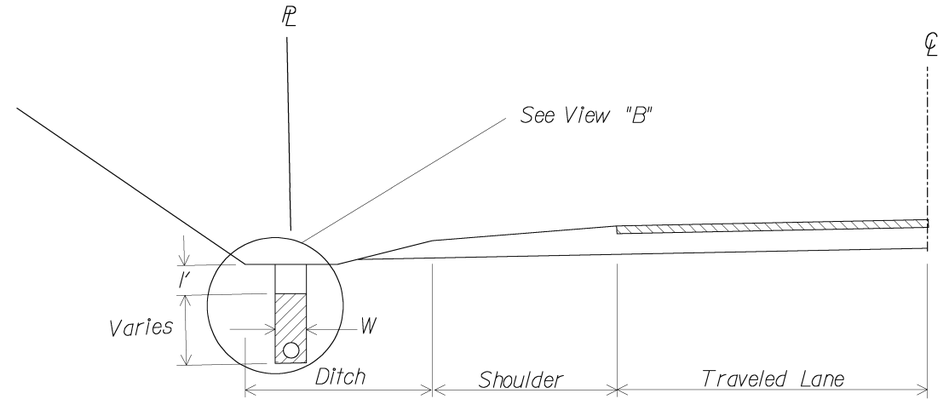

FLAT BOTTOM DITCH

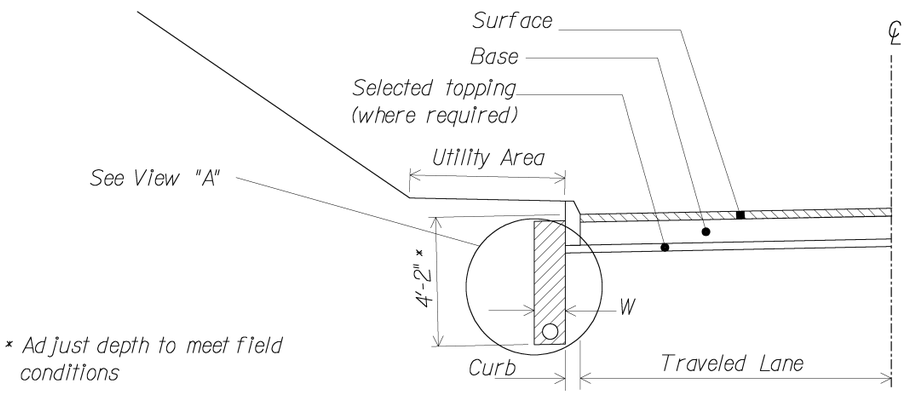

× Adjust depth to meet field conditions

CURB AND GUTTER

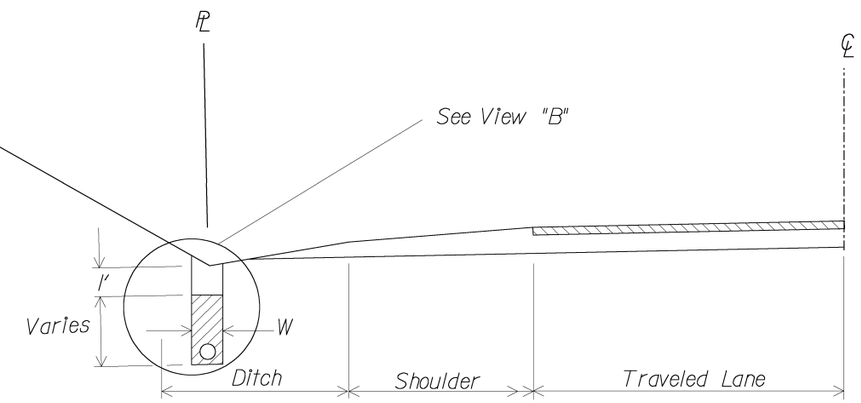

VEE DITCH

NOTES:

1. Location of pipe underdrains may be adjusted by the CO.
2. Minimum underdrain grade is 0.5 percent.

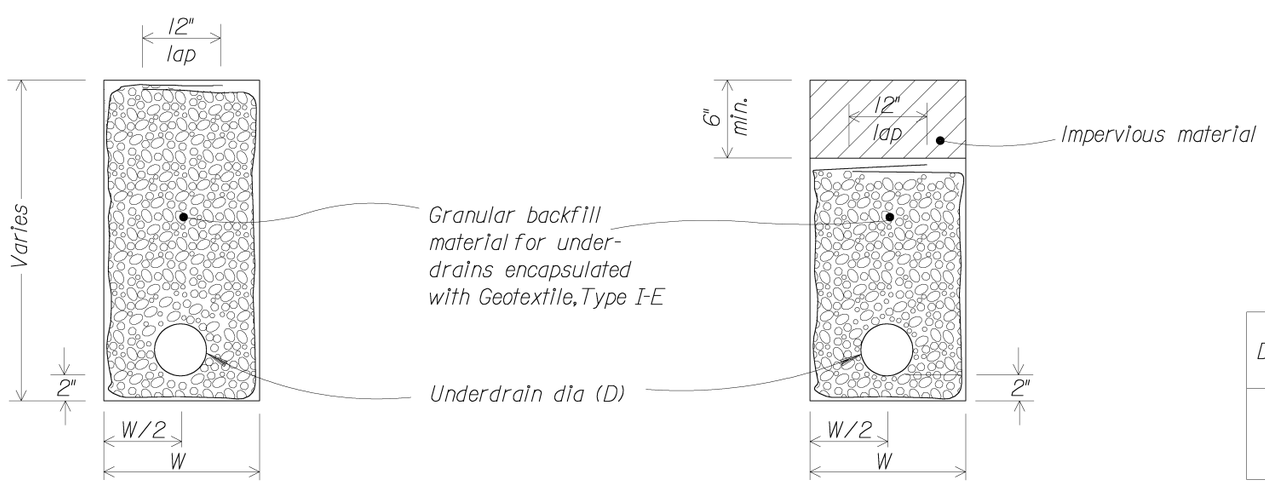

VIEW A

VIEW B

DIAMETER (D)	MINIMUM WIDTH (W)
4"	12"
6"	15"

U.S. DEPARTMENT OF TRANSPORTATION
FEDERAL HIGHWAY ADMINISTRATION
EASTERN FEDERAL LANDS HIGHWAY DIVISION

DETAIL

UNDERDRAIN, FOR PAVEMENT AND DITCHES

DETAIL APPROVED FOR USE --/----

REVISED:

DETAIL E605-1

9/20/2007 8:57:51 AM a:\dlf0001\f0\0\cad\plans\details\numbered-details\s18-dt605x1a.dgn

NPS NO.	REG	STATE	PROJECT	SHEET NO.
412 / 41,911	NCR	MD	PRA CHOH 102 (1)	S19

Note:

1. Rigid pavement adjacent to combination curb and gutter and closed section roadway using rigid pavement with combination curb and gutter shall be keyed and tied at the roadway pavement construction joint. Tie devices are not required when adjacent to flexible pavement.

2. Place 4-inches, minimum aggregate bed course under all curb and gutter unless noted otherwise on the typical section.

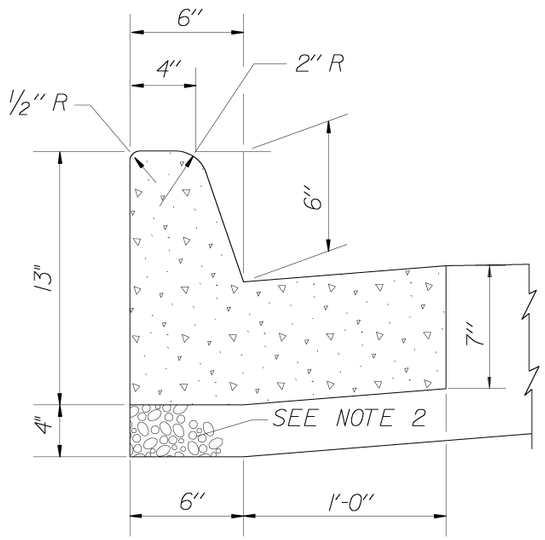

Type A curb and gutter is located in the parking lot, entrance road and rotary.

CURB AND GUTTER, CONCRETE, 13-INCH DEPTH (TYPE A)

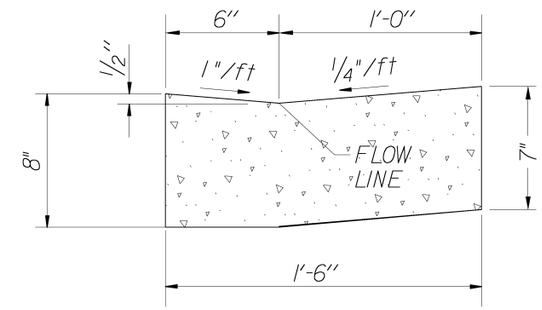

Flush curb is located adjacent to the accessible parking spaces and between stations 300+50, Rt. and 304+20 Lt. (B/L Construction Path)

CURB AND GUTTER, CONCRETE, 8-INCH DEPTH (TYPE B)

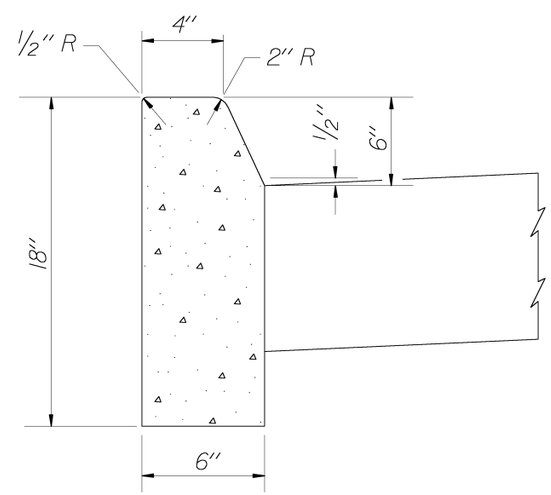

Type C curb is located along the Access Road.

CURB, CONCRETE, 18-INCH DEPTH (TYPE C)

PORTLAND CEMENT CONCRETE CURB AND GUTTER

NOT TO SCALE

U.S. DEPARTMENT OF TRANSPORTATION
FEDERAL HIGHWAY ADMINISTRATION
EASTERN FEDERAL LANDS HIGHWAY DIVISION

DETAIL

CURBS

DETAIL APPROVED FOR USE XX/XX

REVISED: XX/XX

DETAIL E609-A

9/20/2007 8:57:52 AM o:\dlf0001\f01\0\cad\plans\details\numbered-details\s19-df609xa.dgn

NPS NO.	REG	STATE	PROJECT	SHEET NO.
412 / 41,911	NCR	MD	PRA CHOH 102 (1)	S20

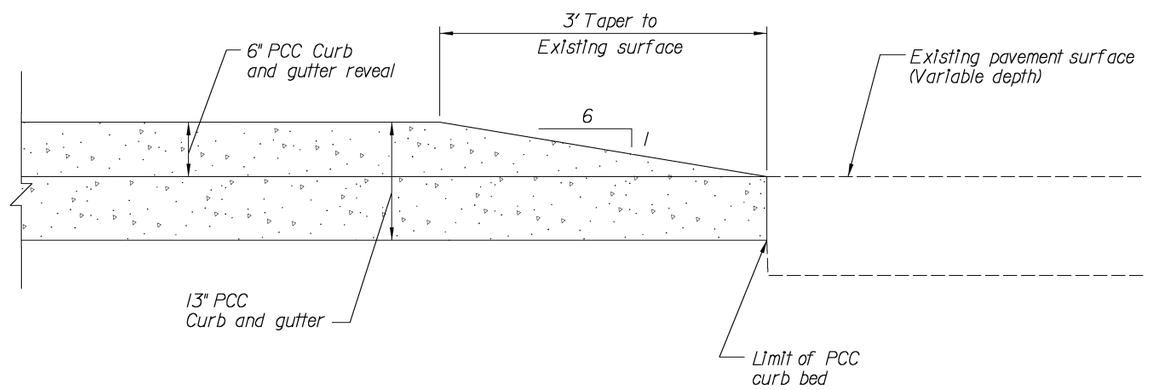

CONCRETE CURB TAPER

U.S. DEPARTMENT OF TRANSPORTATION
FEDERAL HIGHWAY ADMINISTRATION
EASTERN FEDERAL LANDS HIGHWAY DIVISION

DETAIL

CONCRETE CURB TAPER

DETAIL APPROVED FOR USE XX/XX

REVISED: XX/XX

DETAIL
E609-B

9/20/2007 8:57:53 AM a:\dlf0001\f0\0\cad\plans\details\numbered-details\s20-e609-b.dgn

NPS NO.	REG	STATE	PROJECT	SHEET NO.
412 / 41,911	NCR	MD	PRH-CHOH 102 (1)	S21

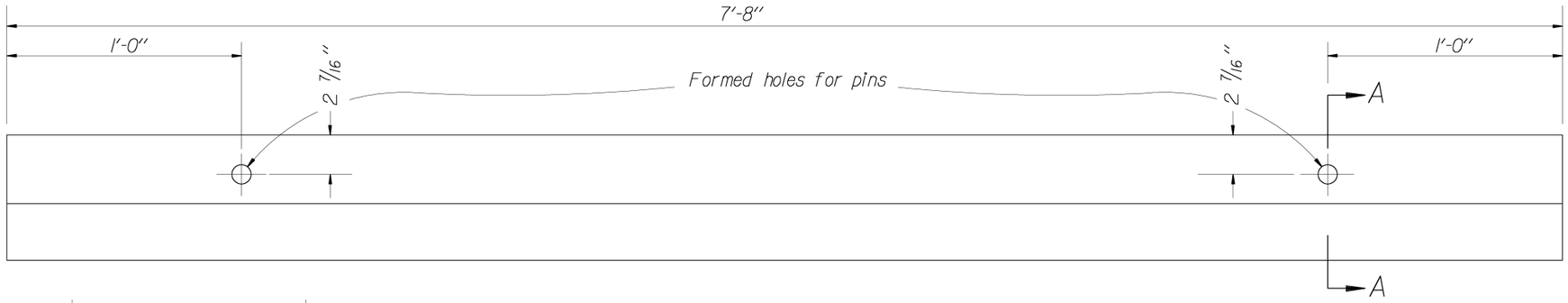

Note:

1. Center wheel stops between, and perpendicular to, stall lines.
2. Variations in wheel stops will be allowed with the approval of the CO to meet manufacturer's standards.

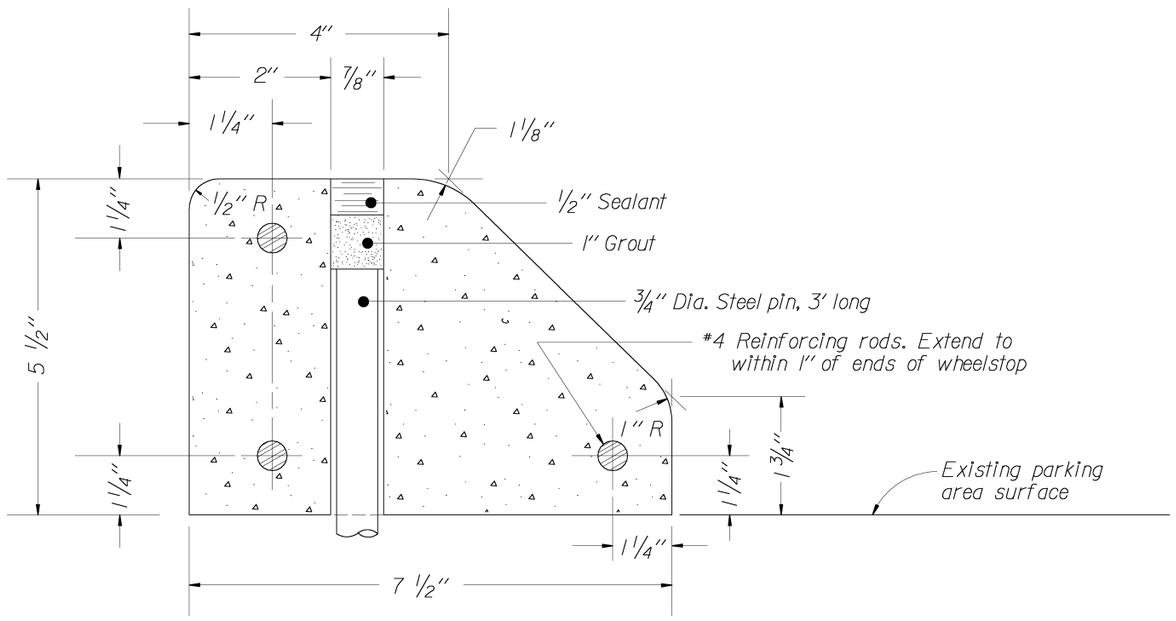

SECTION A-A

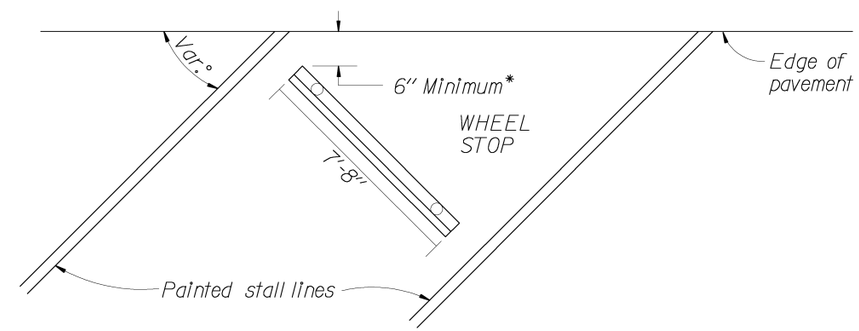

ANGULAR PARKING

*Increase distance for walls or other obstructions, as directed by the CO.

NOT TO SCALE

U.S. DEPARTMENT OF TRANSPORTATION
FEDERAL HIGHWAY ADMINISTRATION
EASTERN FEDERAL LANDS HIGHWAY DIVISION

DETAIL

CONCRETE WHEELSTOP

DETAIL APPROVED FOR USE XX/XX

REVISED: XX/XX

DETAIL E609-C

9/20/2007 8:57:54 AM o:\dlf0001lf00\0\cad\plans\details\numbered-details\s21-dt609xc.dgn

NPS NO.	REG	STATE	PROJECT	SHEET NO.
412 / 41,911	NCR	MD	PRA CHOH 102 (1)	S22

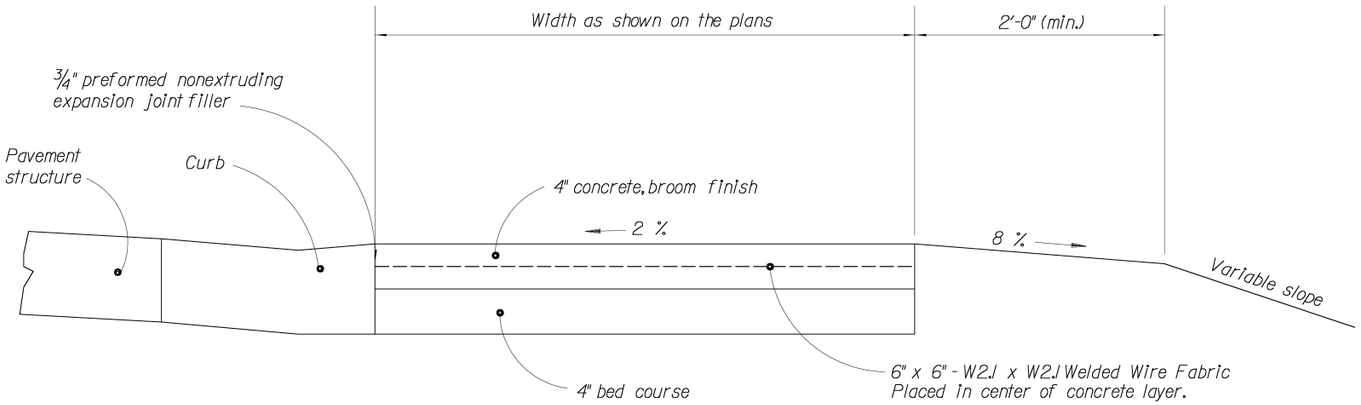

SIDEWALK WITH FLUSH CURB

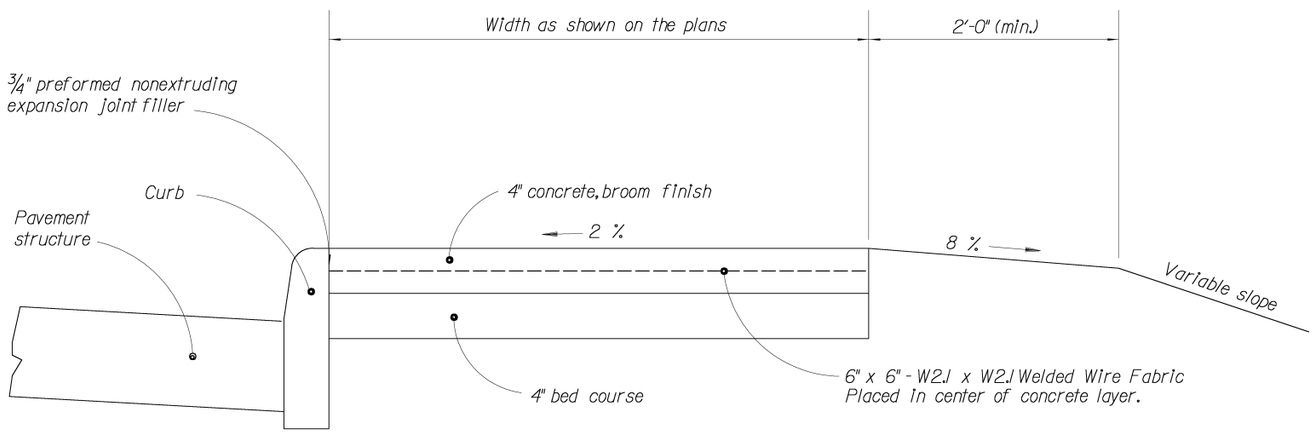

SIDEWALK WITH CURB

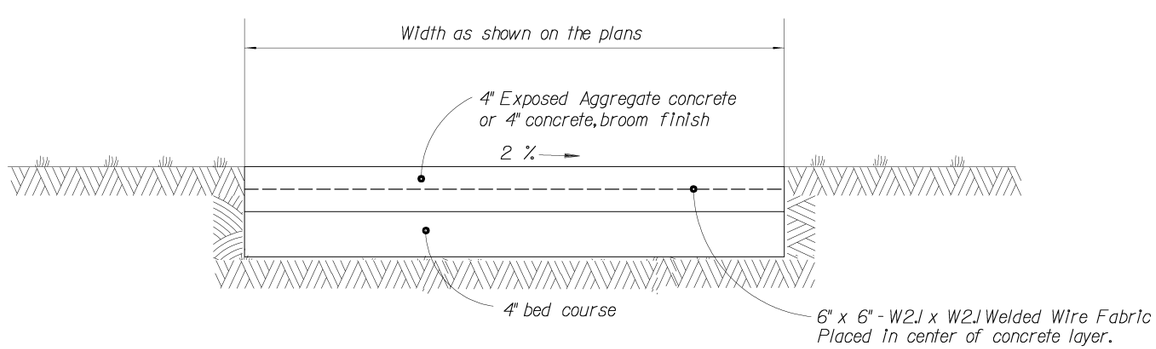

SIDEWALK

SIDEWALK NOTES:

1. Place 3/4" transverse expansion joints at intervals of not more than 30 feet to match adjacent curb expansion joints.
2. Place dummy joints at intervals equal to the width of the sidewalk as shown on the plans.
3. Seal joint at sidewalk and curb with joint sealant, 4" minimum depth.
4. Supply sidewalk sample for broom (or brush) finish and exposed aggregate, including joint sample and color for approval by the Co prior to construction of any sidewalk.

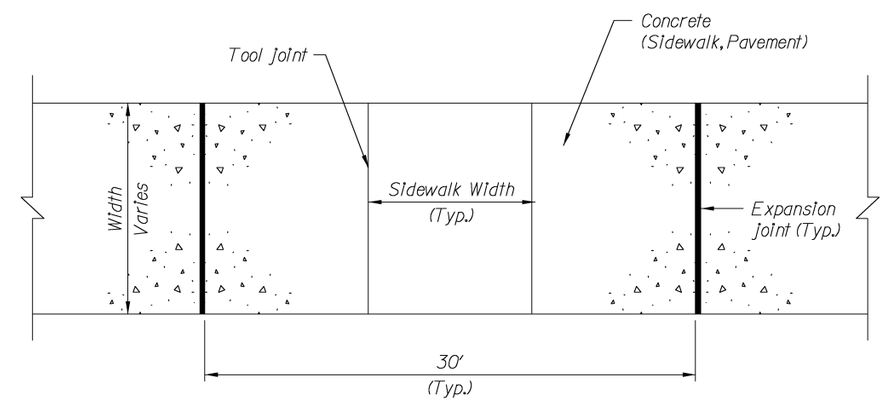

CONCRETE JOINT SPACING

NO SCALE

MODIFIED FOR THIS PROJECT

U.S. DEPARTMENT OF TRANSPORTATION
FEDERAL HIGHWAY ADMINISTRATION
EASTERN FEDERAL LANDS HIGHWAY DIVISION

DETAIL

CONCRETE SIDEWALK

DETAIL APPROVED FOR USE XX/XX	DETAIL
REVISED: XX/XX	E615-A

9/20/2007 8:57:55 AM c:\dlf0001\r70\l\cad\plans\details\numbered-details\s22-e6150a.dgn

NPS NO.	REG	STATE	PROJECT	SHEET NO.
412 / 41,911	NCR	MD	PRA CHOH 102 (1)	S23

ELEVATION TABLE				LENGTHS	
Location	A	B	C	L1	L2
Sta. 55+03	178.5	182.5	186.5	7.0'	7.0'
Sta. 61+21	180.5	183.5	186.5	5.0'	5.0'

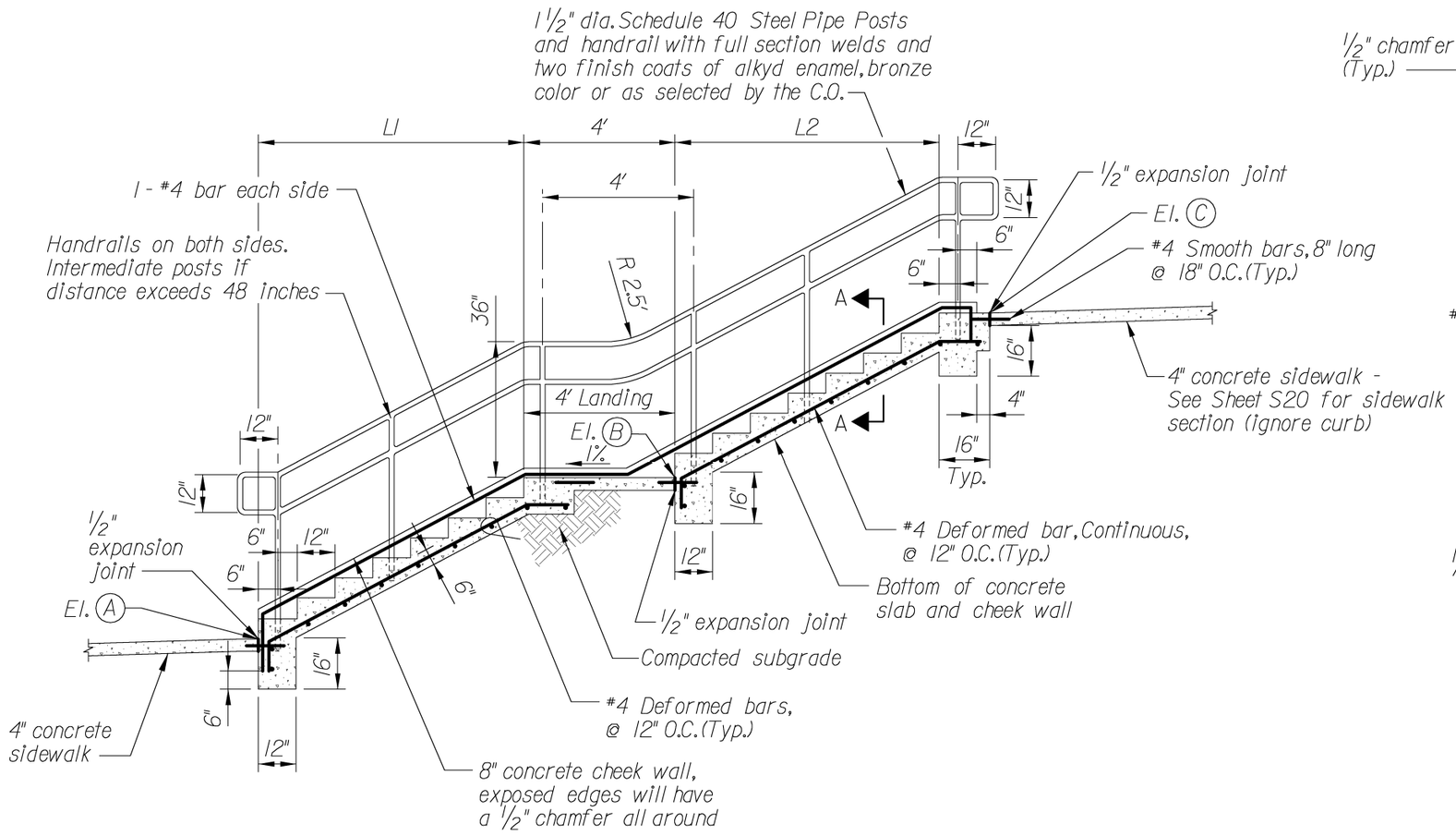

CONCRETE STEP REPLACEMENT DETAIL

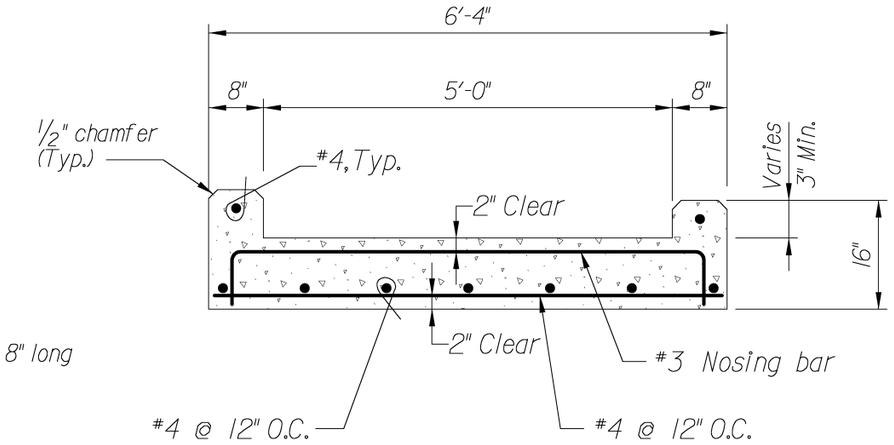

SECTION A-A

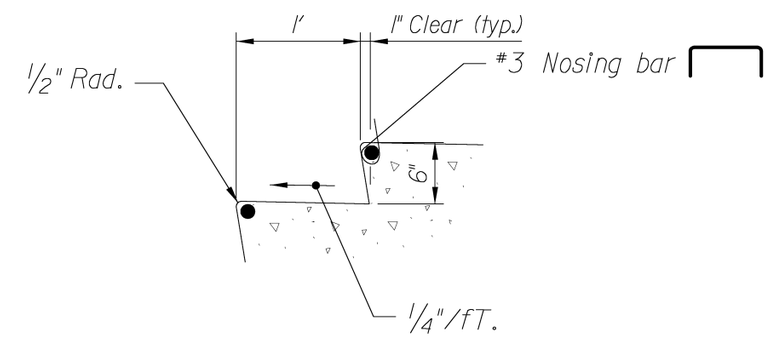

RISER DETAIL

NOTES:

1. Width of step to 5'-0". Out to out dimension is 6'-4".
2. Concrete will be a minimum of 3,500 psi concrete at 28 days.
3. Provide a broom finish on the landings and the tread.

NO SCALE

U.S. DEPARTMENT OF TRANSPORTATION
FEDERAL HIGHWAY ADMINISTRATION
EASTERN FEDERAL LANDS HIGHWAY DIVISION

DETAIL

CONCRETE STEP REPLACEMENT DETAIL

DETAIL APPROVED FOR USE XX/XX

REVISED: XX/XX

DETAIL E615-B

10/12/2007 1:55:02 PM G:\DIF0001\FOLD\CAD\Plans\Details\Numbered-Details\S23-dtE616-B.dgn

NPS NO.	REG	STATE	PROJECT	SHEET NO.
412 / 41,911	NCR	MD	PRA CHOH 102 (1)	S24

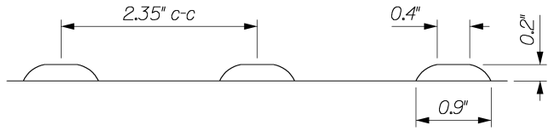

SECTION
TRUNCATED DOME

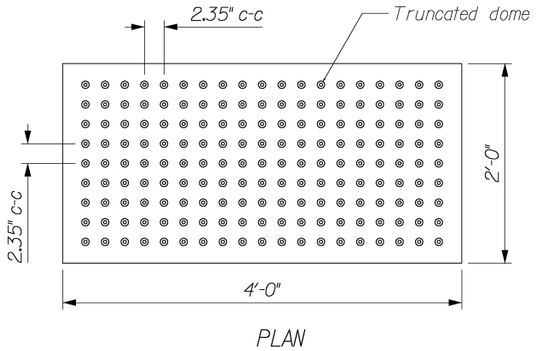

DETECTABLE WARNING FIELD
WITH TRUNCATED DOMES

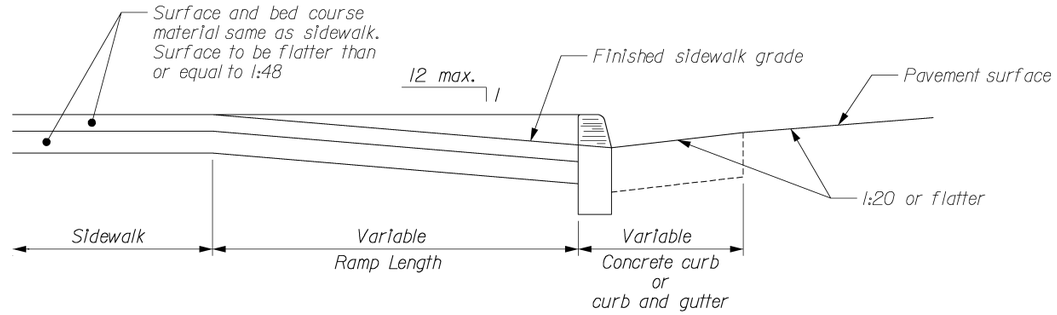

RAMP - TYPICAL SECTION

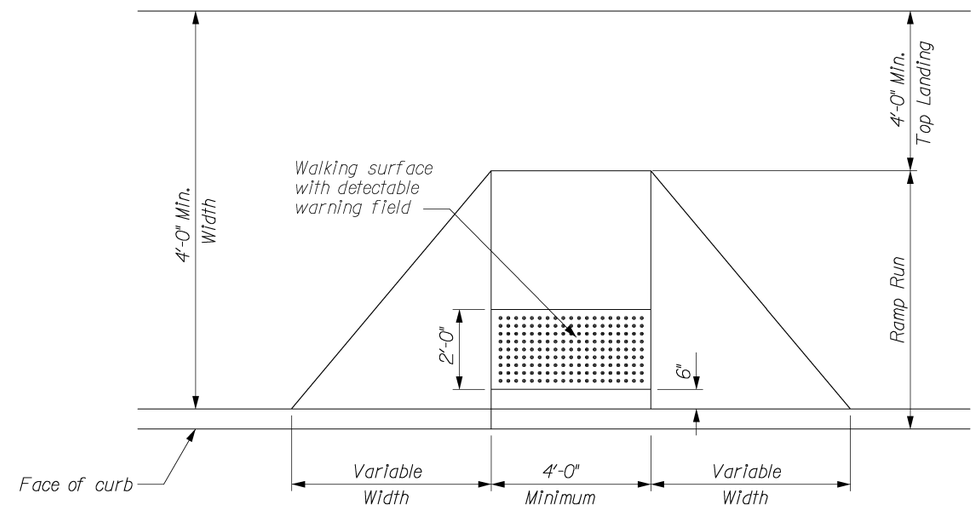

PERPENDICULAR CURB RAMP

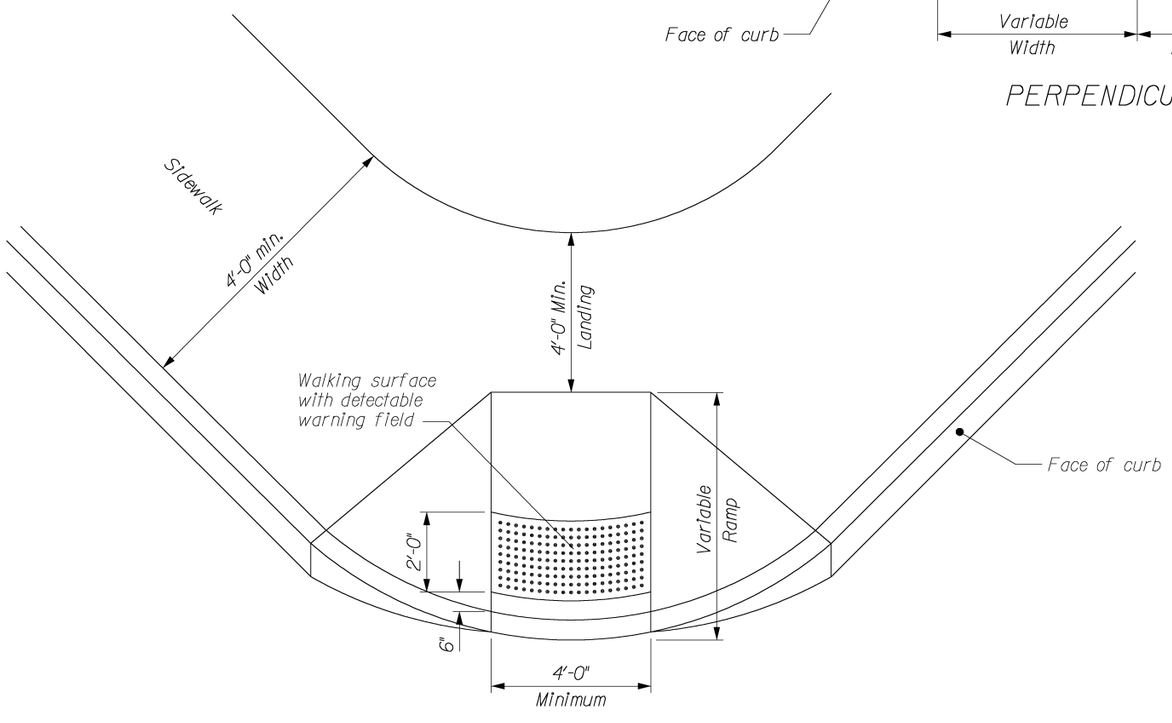

DIAGONAL CURB RAMP

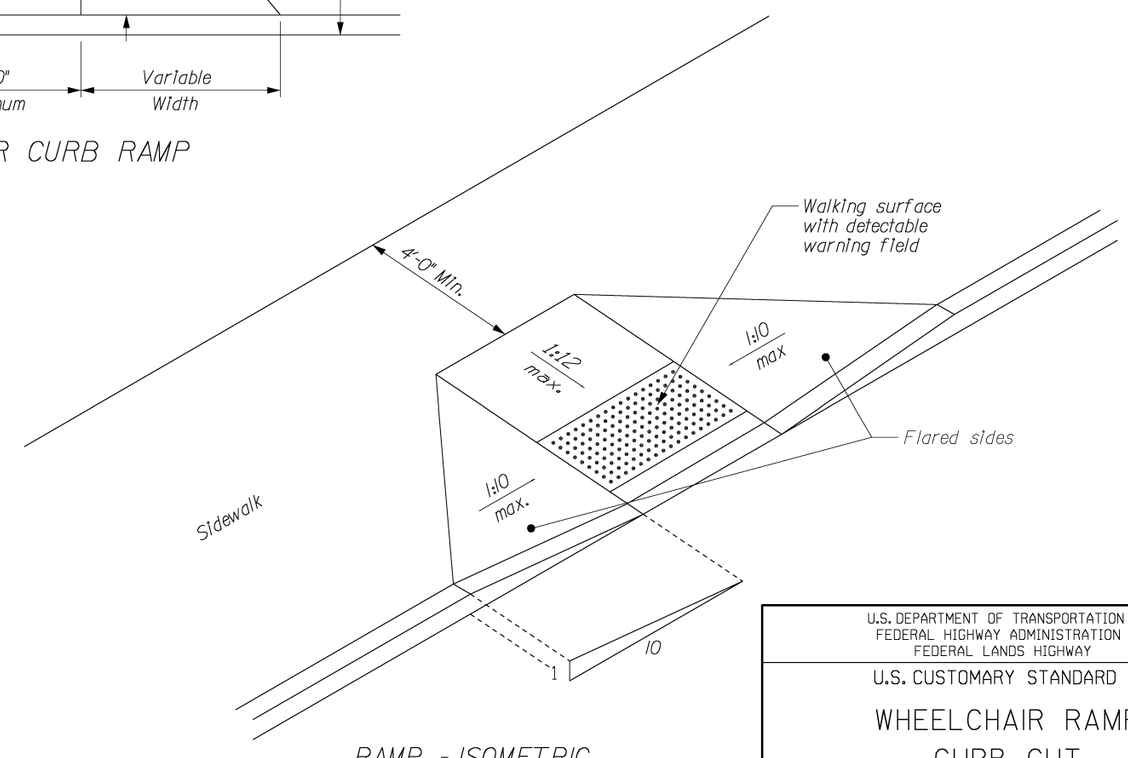

RAMP - ISOMETRIC

NO SCALE

NOTE:

1. The maximum cross slopes of ramps must not exceed 2% in any direction.
2. Use a coarse broom finish running perpendicular to the slope to create a slip resistant surface on concrete ramp surfaces, exclusive of the detectable warning fields.
3. Construct curb ramp perpendicular to the curb. Avoid skewing the ramp face.
4. Construct ramp transitions between walks, gutters, or streets that are flush and free of abrupt vertical changes not to exceed 0.25" max.
5. Locate drainage inlets and manholes outside of ramp walking surfaces or landings.
6. Color and type of detectable warning surfaces must be approved by the CO prior to installation. The contractor must provide a sample for approval.
7. The detectable warning system may be either surface applied or cast in place. The contractor must install the system in conformance with the manufacturer's recommendation.

U.S. DEPARTMENT OF TRANSPORTATION
FEDERAL HIGHWAY ADMINISTRATION
FEDERAL LANDS HIGHWAY

U.S. CUSTOMARY STANDARD

WHEELCHAIR RAMP
CURB CUT

DETAIL APPROVED FOR USE XX/XX

REVISED: DRAFT: 1/2004

STANDARD
615-1

10/12/2007 11:54:49 AM O:\DIF0001170\0\CAD\Plans\Details\Numbered-Details\S24-st615011.21.dgn

NPS NO.	REG	STATE	PROJECT	SHEET NO.
412 / 41,911	NCR	MD	PRA CHOH 102 (1)	S25

NOTE:

1. The maximum cross slopes of ramps must not exceed 2% in any direction.
2. Use a coarse broom finish running perpendicular to the slope to create a slip resistant surface on concrete ramp surfaces, exclusive of the detectable warning fields.
3. Construct ramp transitions between walks, gutters, or streets that are flush and free of abrupt vertical changes not to exceed 0.25 inches.
4. Locate drainage inlets and manholes outside of ramp walking surfaces or landings.

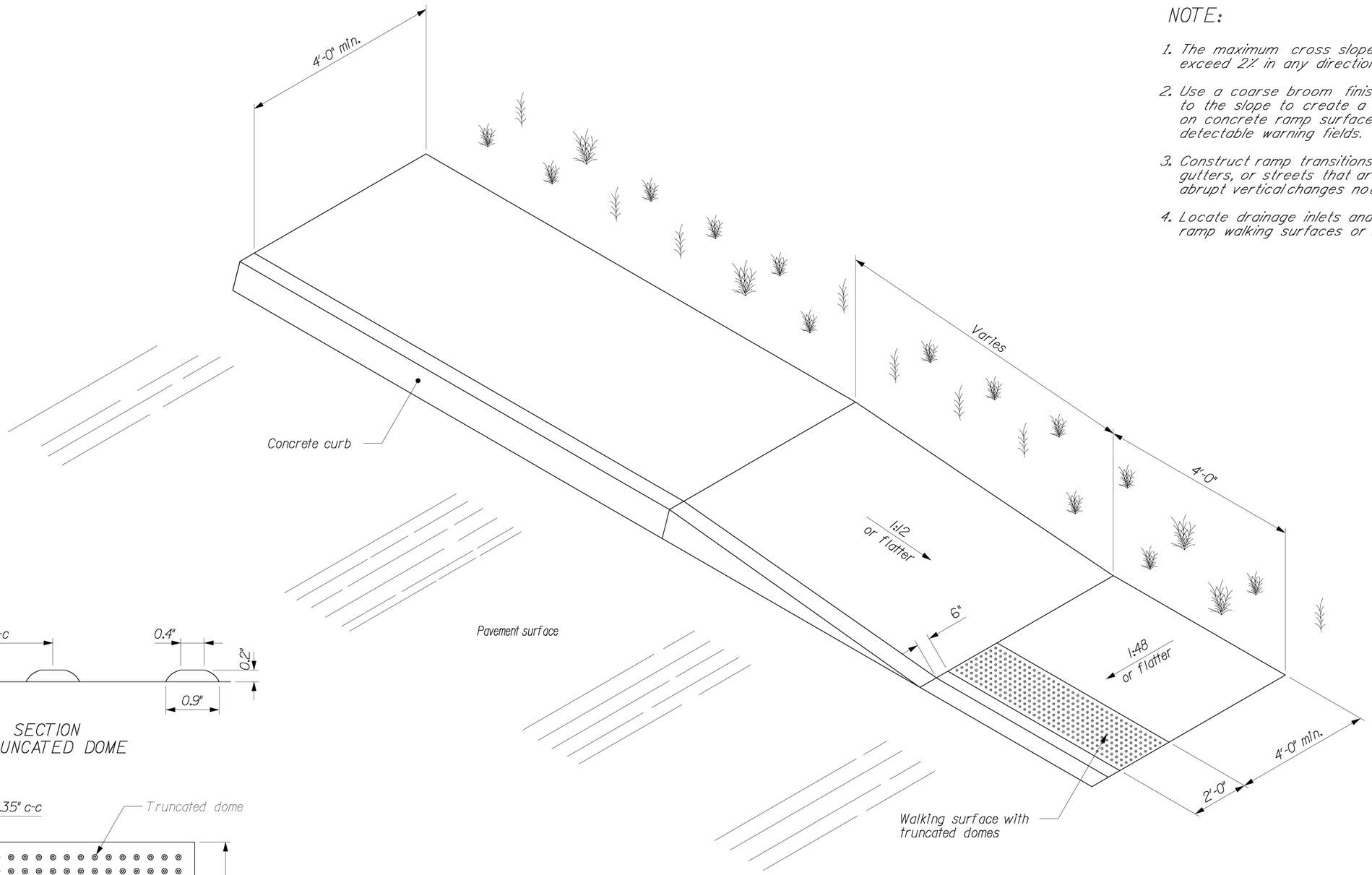

PARALLEL CURB RAMP

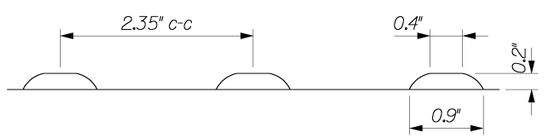

SECTION
TRUNCATED DOME

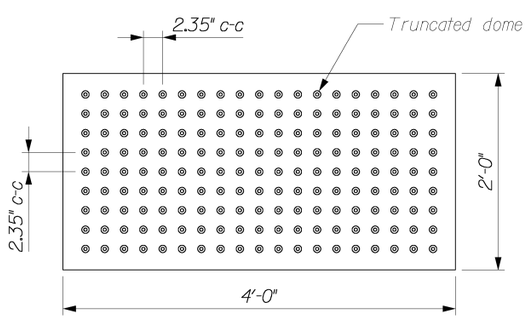

PLAN

DETECTABLE WARNING FIELD
WITH TRUNCATED DOMES

NO SCALE

U.S. DEPARTMENT OF TRANSPORTATION
FEDERAL HIGHWAY ADMINISTRATION
FEDERAL LANDS HIGHWAY

STANDARD

WHEELCHAIR RAMP
CURB TAPER

DETAIL APPROVED FOR USE XX/XX

REVISED: DRAFT: 1/2004

STANDARD
615-2

10/12/2007 1:57:59 PM G:\DIF0001170\0\CAD\Plans\Details\Numbered-Details\S25-s161502.dgn

NPS NO.	REG	STATE	PROJECT	SHEET NO.
412 / 41,911	NCR	MD	PRA CHOH 102 (1)	S26

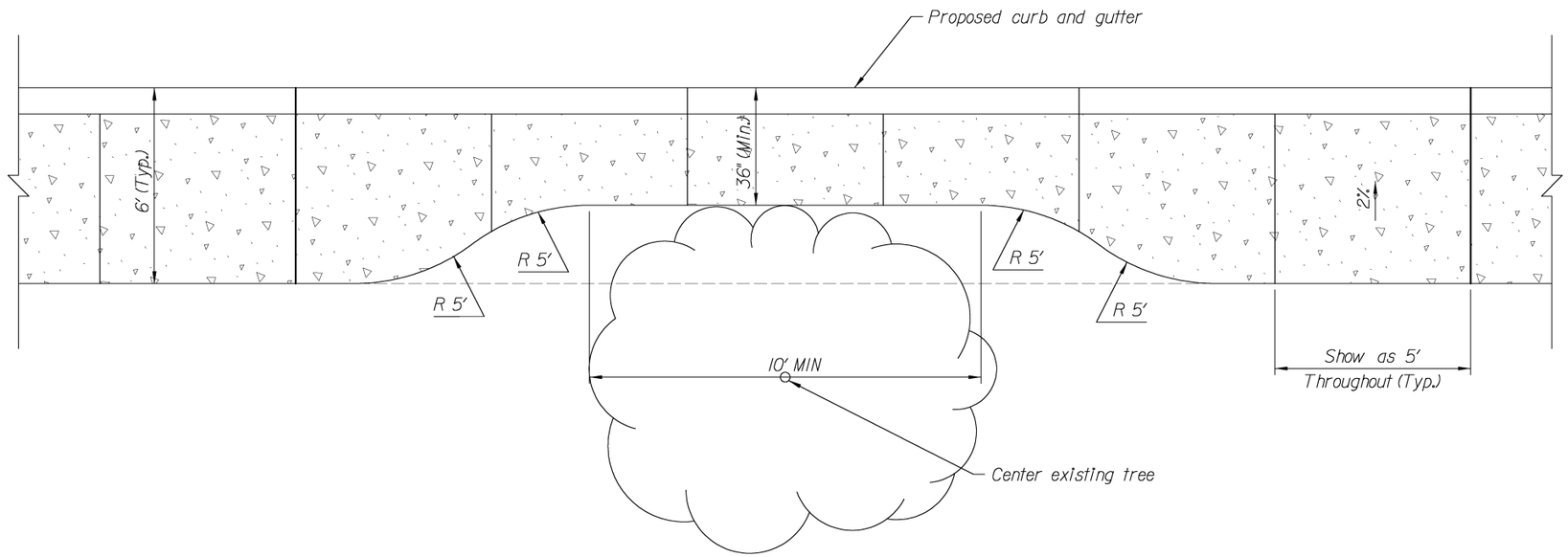

SIDEWALK TRANSITION AT TREE

SCALE: 1" = 2'

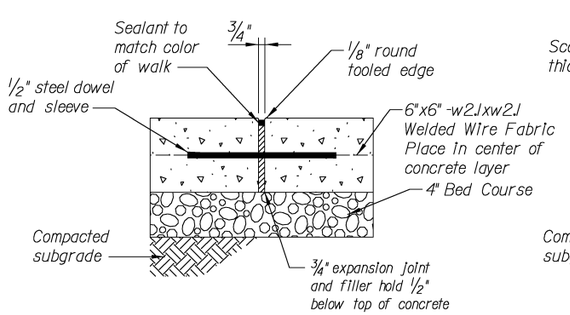

EXPANSION JOINT

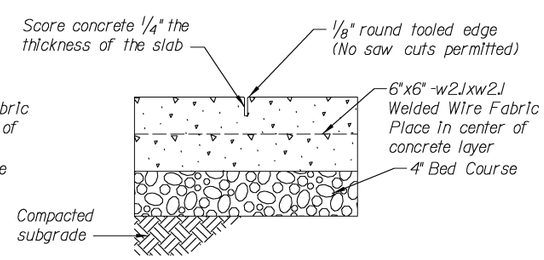

SCORE JOINT

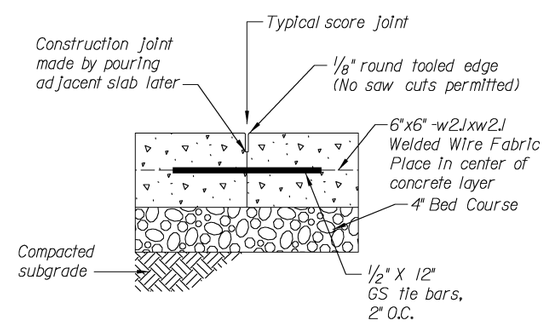

CONSTRUCTION JOINT

CONCRETE JOINTS

CONSTRUCTION JOINT NOTES:

1. Provide construction joints between all separate pours.
2. Provide expansion joint between all structures and concrete.
3. No saw cut joints, tooled only.

U.S. DEPARTMENT OF TRANSPORTATION
FEDERAL HIGHWAY ADMINISTRATION
EASTERN FEDERAL LANDS HIGHWAY DIVISION

DETAIL

SIDEWALK TRANSITION

DETAIL APPROVED FOR USE XX/XX	DETAIL
REVISED: XX/XX	E615-A

9/20/2007 8:57:58 AM c:\dif000117000\cad\plans\details\numbered-details\s26-e620-a.dgn

NPS NO.	REG	STATE	PROJECT	SHEET NO.
412 / 41,911	NCR	MD	PRA CHOH 102 (1)	S27

FENCE TO BE SECURELY BRACED AT EACH END PANEL WITH A REGULAR LINE POST AND 1 DIAGONAL CABLE CONSISTING OF 2 STRANDS OF TWISTED WIRE. EACH STRAND TO CONSIST OF TWO 12 1/2 GAGE GALVANIZED WIRES. (A)

TWO HORIZONTAL WIRES (B) SHALL BE STRUNG BEHIND THE PICKETS FOR THE FULL LENGTH OF THE FENCE. EACH HORIZONTAL WIRE TO CONSIST OF TWO 12 1/2 GAGE TWISTED GALVANIZED WIRES. EACH HORIZONTAL WIRE IS TO BE FASTENED SECURELY TO EACH FENCE POST BY MEANS OF 11 GAGE WIRE CLAMPS OR NO 12 1/2 GAGE WIRE TIES.

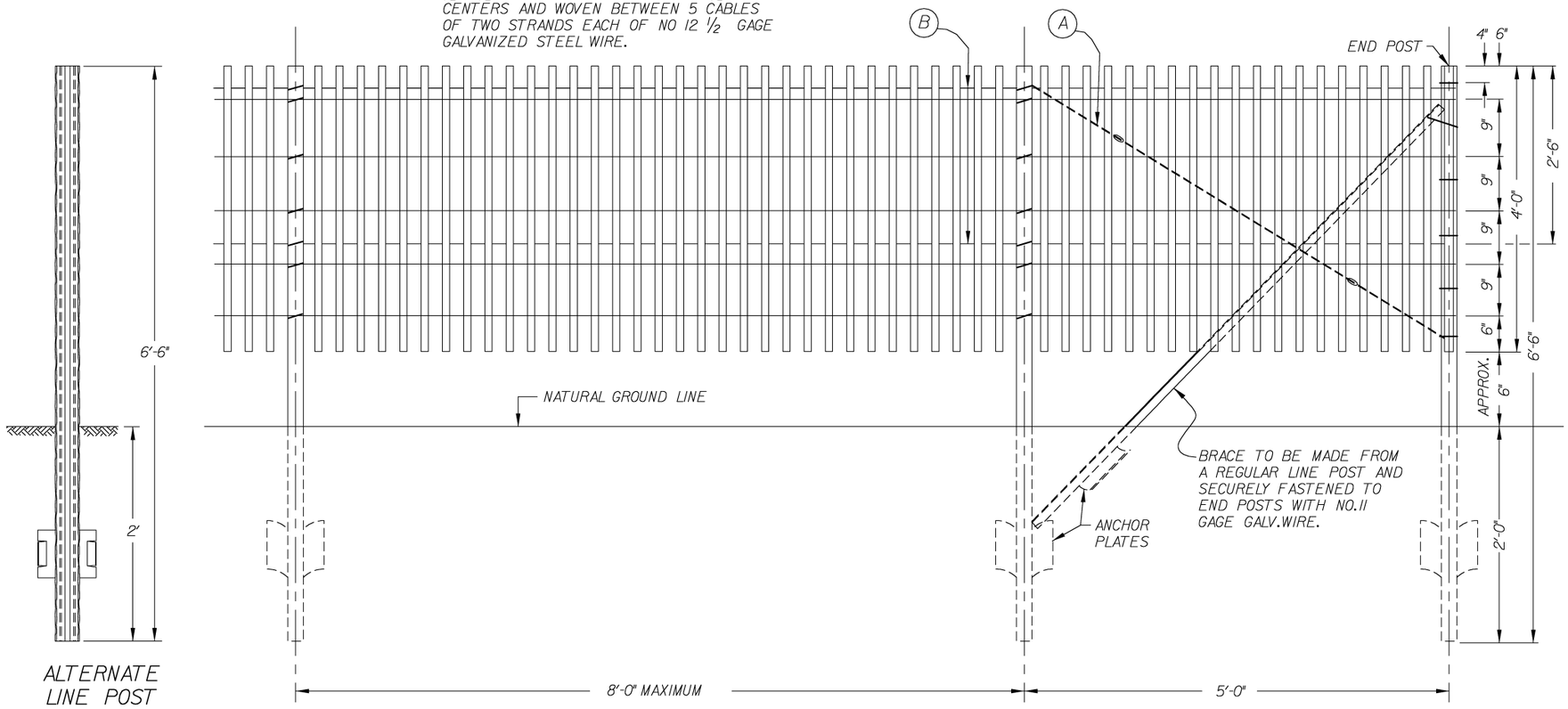

ALTERNATE LINE POST ("U" POST)

FRONT ELEVATION OF PICKET TREE PROTECTION FENCE

GENERAL NOTES

1. WIRE-BOUND PICKET FENCE, CONFORMING TO ASTM F 537, IS TO BE STRETCHED TIGHT AND SECURELY FASTENED TO ALL POSTS WITH 11 GA. GALVANIZED STEEL WIRE CLAMPS OR 12 1/2 GA. GALVANIZED STEEL WIRE TIES.
2. ALL FENCE POSTS, COMPLETE WITH ANCHOR PLATE, SHALL BE HOT-DIPPED GALVANIZED, ALL CONFORMING TO REQUIREMENTS OF AASHTO M 281. LINE POSTS (WITHOUT ANCHOR) SHALL WEIGH NOT LESS THAN 1.33 LBS. PER LIN. FT. (RAW). SUITABLE ANCHOR PLATES SHALL BE SECURELY FASTENED TO EACH LINE POST AND SHALL WEIGH 0.67 LB. NOMINAL.
3. VERIFY THE LOCATION OF EXISTING UTILITIES PRIOR TO POST INSTALLATION. CONTACT MISS UTILITY (1-800-257-7777) A MINIMUM OF 48 HOURS PRIOR TO CONSTRUCTION.

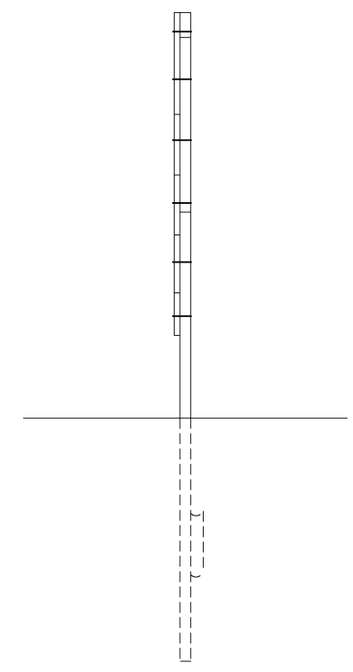

END ELEVATION

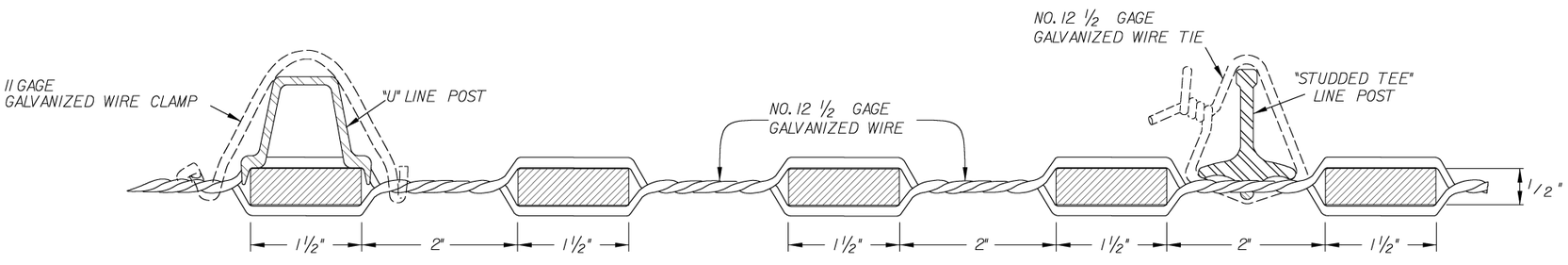

TYPICAL SECTIONS THROUGH TREE PROTECTION FENCE POST AND PICKETS

NOTE:
OTHER SECTIONS OF STEEL POSTS HAVING EQUAL WEIGHT AND EQUIVALENT STRENGTH MAY BE USED IN LIEU OF EITHER OF THESE SECTIONS.

U.S. DEPARTMENT OF TRANSPORTATION
FEDERAL HIGHWAY ADMINISTRATION
EASTERN FEDERAL LANDS HIGHWAY DIVISION

DETAIL
PICKET
TREE PROTECTION FENCE

SHEET 1 OF 2

DETAIL APPROVED FOR USE XX/XX

REVISED: XX/XX

DETAIL
E619 -A

9/20/2007 8:57:59 AM a:\dlr000\ifo\0\cad\plans\details\numbered-details\s27-dfe619-a.dgn

NPS NO.	REG	STATE	PROJECT	SHEET NO.
412 / 41,911	NCR	MD	PRA CHOH 102 (1)	S28

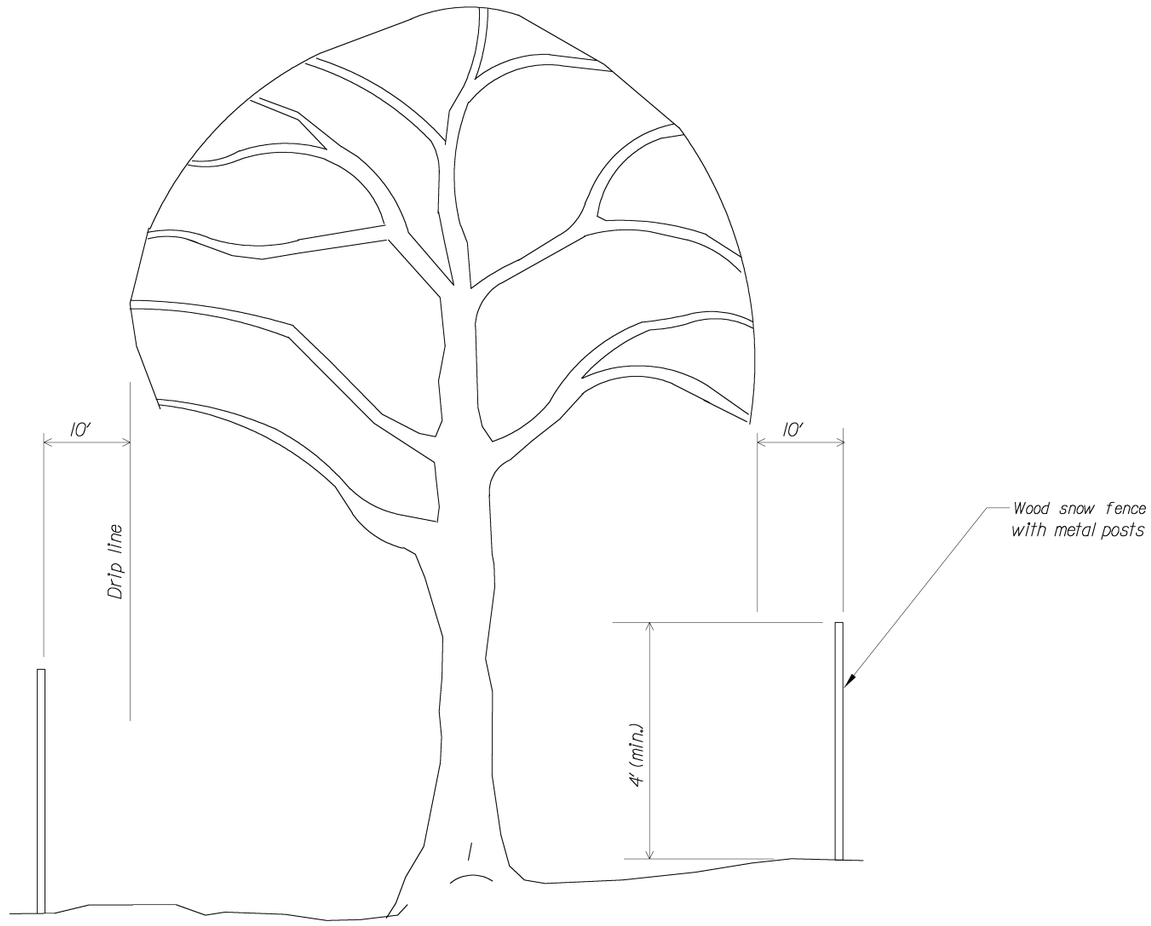

Notes:

1. Install wood snow fence for tree protection at the locations designated by the CO.

U.S. DEPARTMENT OF TRANSPORTATION
FEDERAL HIGHWAY ADMINISTRATION
EASTERN FEDERAL LANDS HIGHWAY DIVISION

DETAIL

TREE PROTECTION FENCE

SHEET 2 OF 2

DETAIL APPROVED FOR USE XX/XX

REVISED: XX/XX

DETAIL
E619-A

9/20/2007 8:58:00 AM a:\dlf0001\f0\0\cad\plans\details\numbered-details\s28-dfe619-b.dgn

NPS NO.	REG	STATE	PROJECT	SHEET NO.
412 / 41,911	NCR	MD	PRH-CHOH 102 (1)	S29

ROADSIDE SIGN RURAL DISTRICT NO SHOULDER

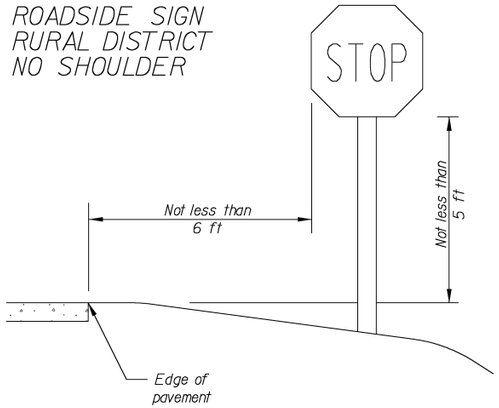

WARNING SIGN WITH ADVISORY SPEED PLAQUE RURAL DISTRICT

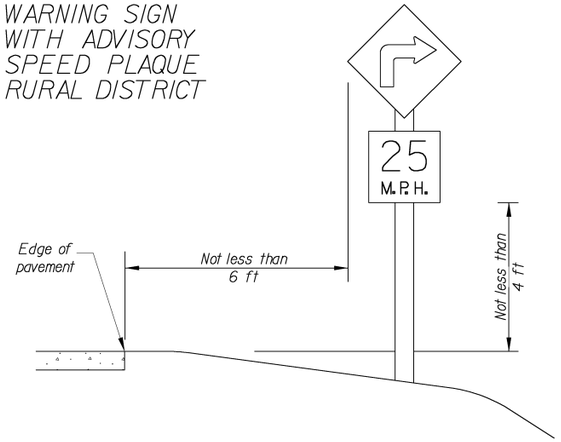

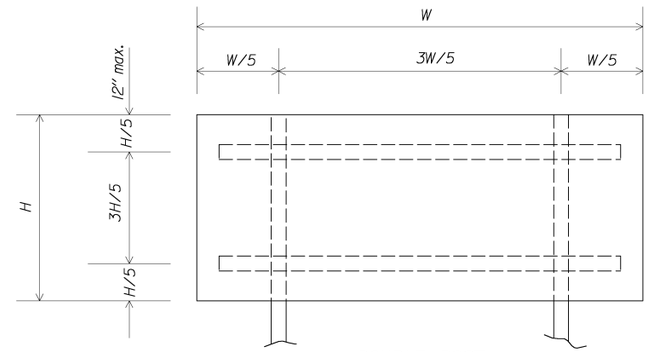

DOUBLE POST

Notes:

1. Locations and height to be in accordance with the 'Manual on Uniform Traffic Control Devices for Streets and Highways' (MUTCD), latest edition.
2. Use wood battens bolted to post at vertical spacings not to exceed 30-inches.
3. Use double posts if W is over 3 feet.
4. For sign punching details, see the blank standards in the "Standard Highway Signs" as specified in the MUTCD, latest edition.
5. For steel posts, provide a 1/4" x 6" soil plate. Use the same type of steel for the soil plate as for the post. Soil plate is not required for breakaway design.
6. For signs requiring posts sizes 6 x 6 and greater, signs are considered to be non-breakaway if multiple posts are required and posts cannot be spaced a minimum of 7 feet apart. Place non-breakaway signs outside the clearzone or shield with approved barrier. Do not place holes in posts of non-breakaway signs.
7. Depth, D, is to be in accordance with the 'Manual on Uniform Traffic Control Devices for Streets and Highways' (MUTCD), latest edition, Section 2A.21 and the AASHTO manual 'Specifications for Structural Supports for Highway Signs, Luminaires, and Traffic Signals', latest edition or as directed by the CO. D (min) is given in CHART A.

ROADSIDE SIGN BUSINESS OR RESIDENCE DISTRICT

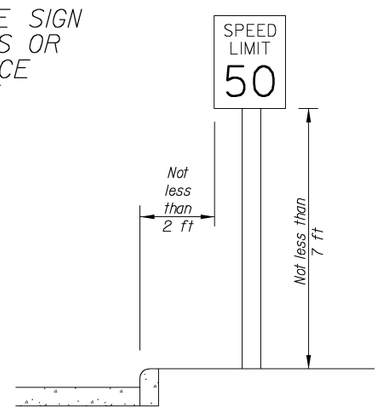

ROADSIDE SIGN RURAL DISTRICT WITH SHOULDER

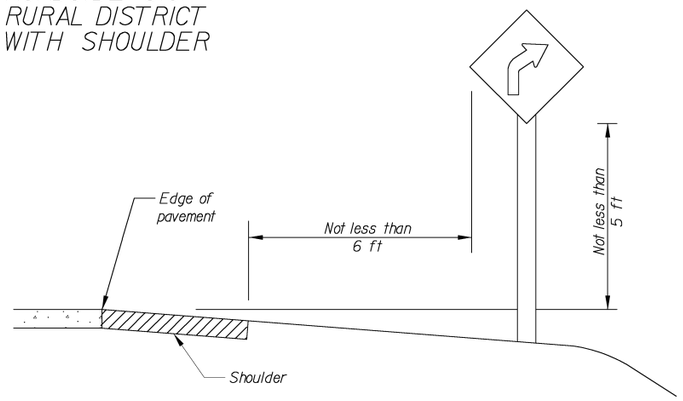

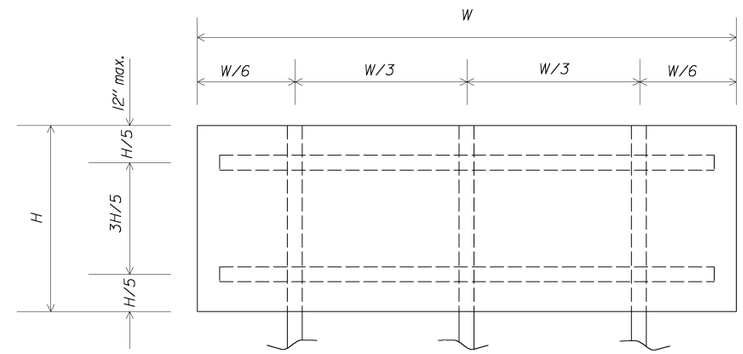

TRIPLE POST

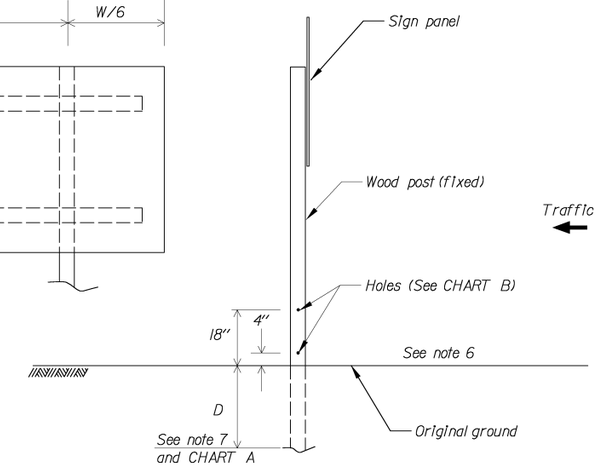

BREAKAWAY SUPPORT DETAIL

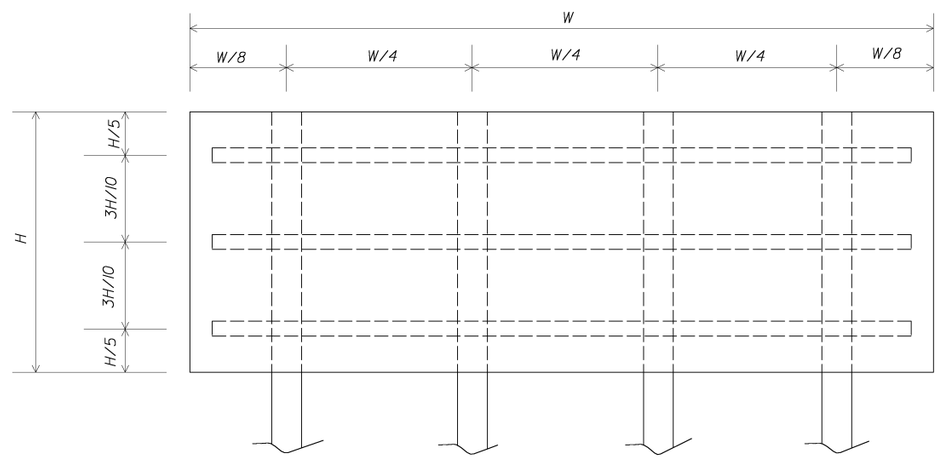

QUADRUPLE POST

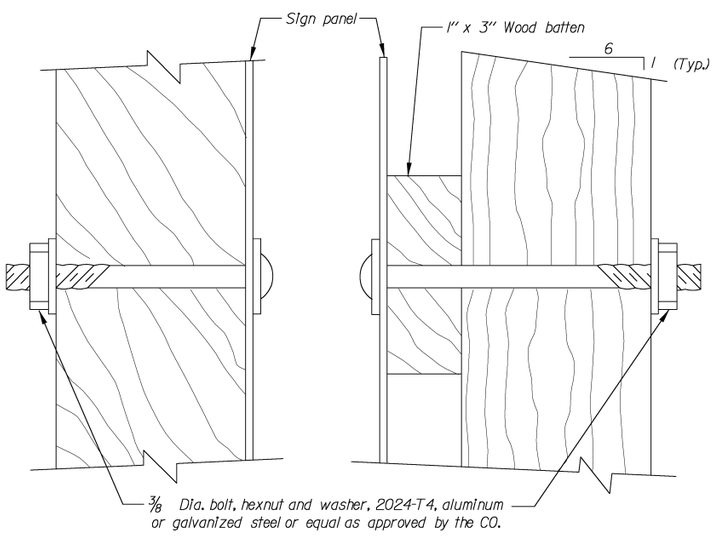

WITHOUT BATTEN

WITH BATTEN

FASTENER DETAIL

CHART B	
Post Size	Hole Diameter
4" x 4"	None Required
4" x 6"	1.5"
6" x 6"	2"
6" x 8"	3"

CHART A					
Post Size (Inch)	D (min.) *	Maximum Sign Area (sq. ft.)			
		Single Post	Double Post	Triple Post	Quadruple Post
4 x 4 (Wood)	3'	10	20		
4 x 6 (Wood)	4'	15	35	45	60
6 x 6 (Wood)	4'	20	50	75	100

*See note 7

U.S. DEPARTMENT OF TRANSPORTATION
FEDERAL HIGHWAY ADMINISTRATION
EASTERN FEDERAL LANDS HIGHWAY DIVISION

DETAIL

SIGN STRUCTURES

DETAIL APPROVED FOR USE XX/XX

REVISED: XX/XX

DETAIL E633-1

9/20/2007 8:58:01 AM a:\df0001\ff0\0\cad\plans\details\numbered-details\s29-df633x01.dgn

NPS NO.	REG	STATE	PROJECT	SHEET NO.
412 / 41,911	NCR	MD	PRA CHOH 102 (1)	S30

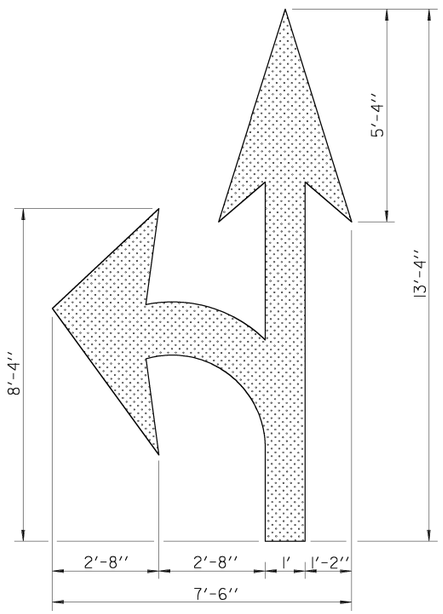

TURN AND THROUGH LANE-USE ARROW

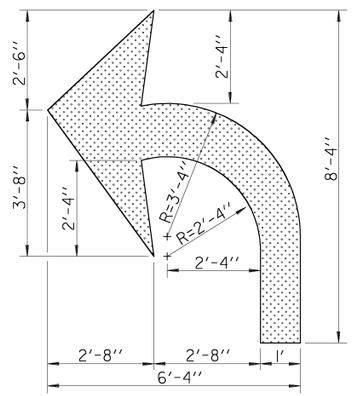

TURN LANE-USE ARROW

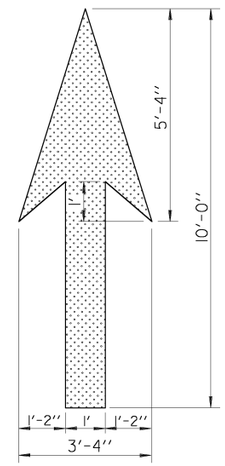

THROUGH LANE-USE ARROW

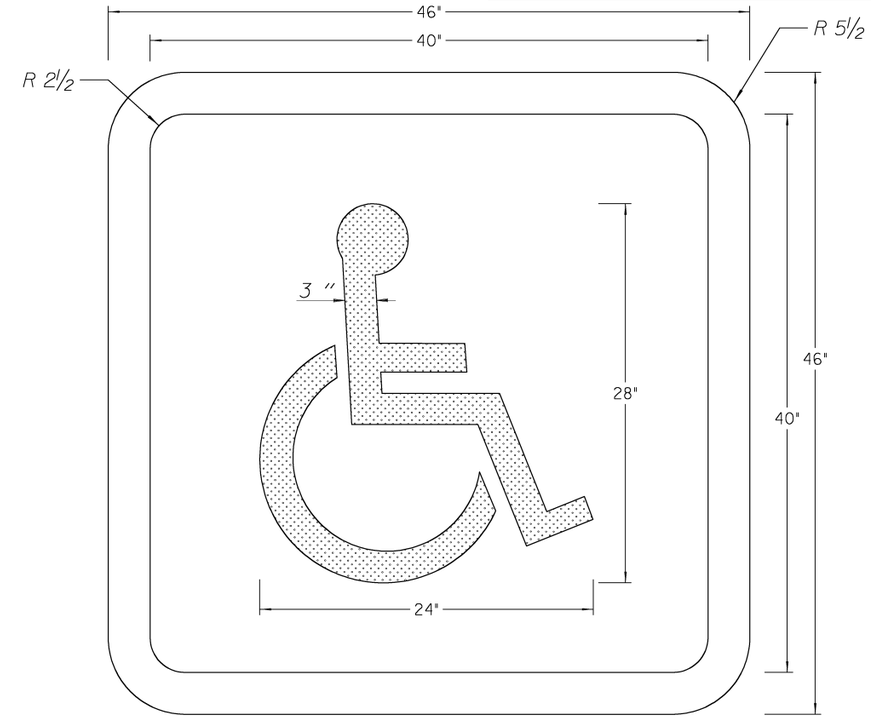

HANDICAP MARKING

*Reduce to 5'-0" for speeds under 35 mph

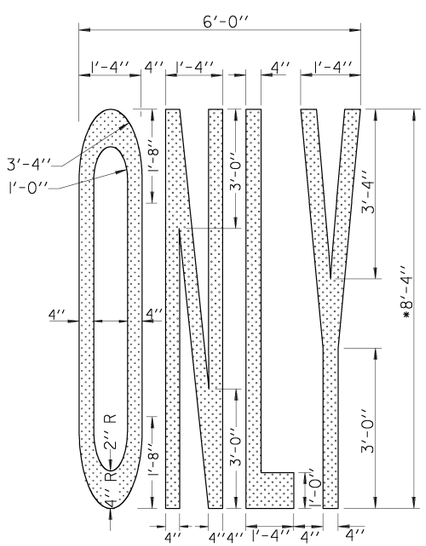

"ONLY" WORD MARKING

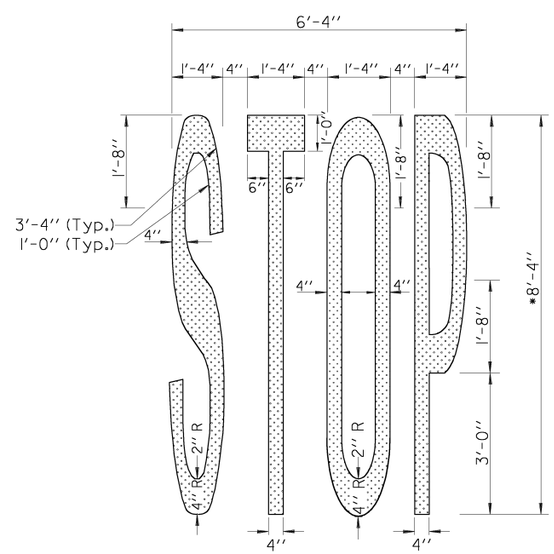

"STOP" WORD MARKIING

NOTES :

1. Place pavement word and symbol markings in accordance with the "Manual on Uniform Traffic Control Devices" (MUTCD), current edition.

2. All letters, numerals and symbols shall conform with the "Standard Alphabets for Highway Signs and Pavement Markings".

PAYMENT QUANTITIES	
ITEM	AREA (SQ. FT.)
Turn Lane-Use Arrow	16
Through Lane-Use Arrow	13
Turn and Through Lane-Use Arrow	28
Handicap Marking	16
ONLY Word Marking	18
STOP Word Marking	17

U.S. DEPARTMENT OF TRANSPORTATION
FEDERAL HIGHWAY ADMINISTRATION
EASTERN FEDERAL LANDS HIGHWAY DIVISION

DETAIL

PAVEMENT MARKINGS
SYMBOLS AND WORDS

DETAIL APPROVED FOR USE XX/XX

REVISED: XX/XX

DETAIL E634-1

9/20/2007 8:58:02 AM o:\dlf0001lf70\0\cad\plans\details\numbered-details\s30-dt634x01.dgn

NPS NO.	REG	STATE	PROJECT	SHEET NO.
412 / 41,911	NCR	MD	PRH-CHOH 102 (1)	S31

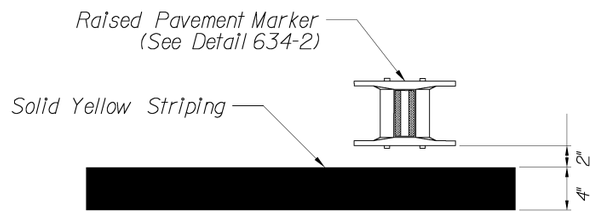

DETAIL A

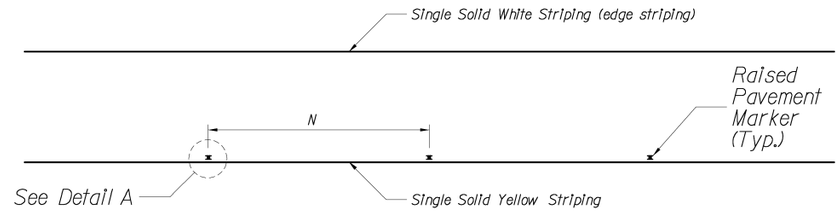

SINGLE SOLID YELLOW STRIPING
WITH RAISED PAVEMENT MARKERS

NOTES:

1. All striping shall be in accordance with the Manual on Uniform Traffic Control Devices (MUTCD) latest edition.
2. Space and install Raised Pavement Markers in accordance with the MUTCD and as shown in this detail or as directed by the CO.

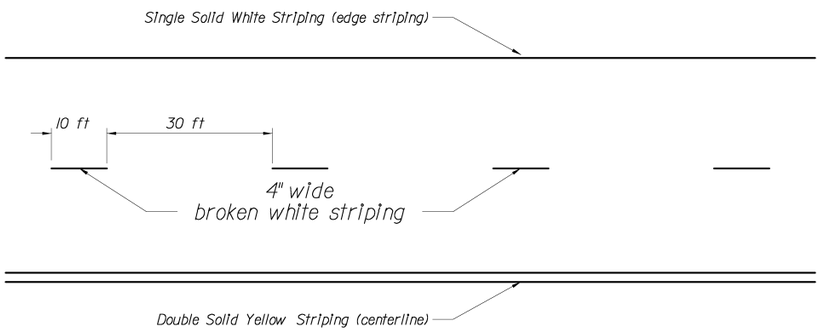

BROKEN SINGLE WHITE AND
DOUBLE SOLID YELLOW STRIPING

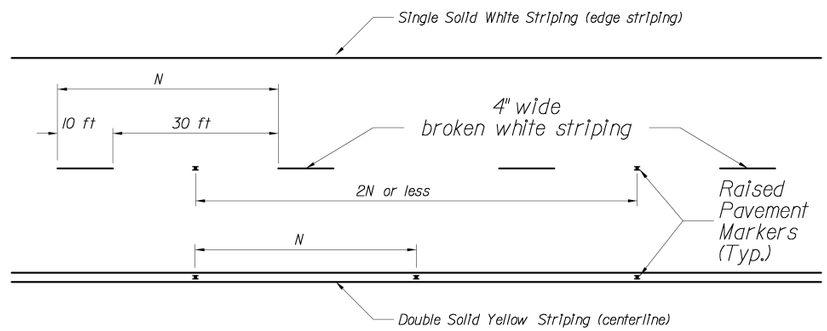

BROKEN SINGLE WHITE AND
DOUBLE SOLID YELLOW STRIPING
WITH RAISED PAVEMENT MARKERS

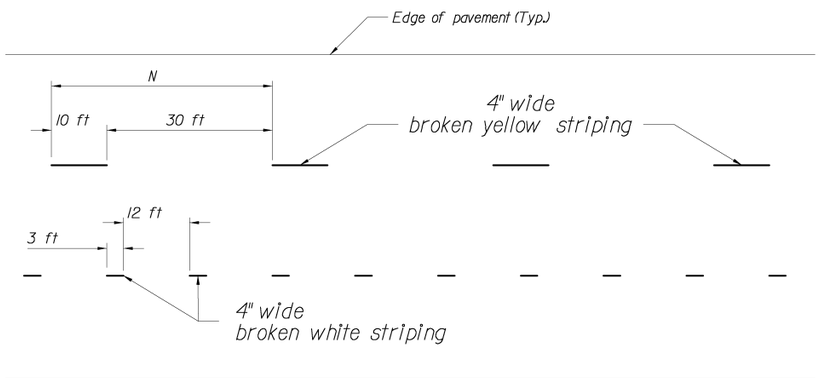

BROKEN SINGLE YELLOW AND
DOTTED WHITE STRIPING

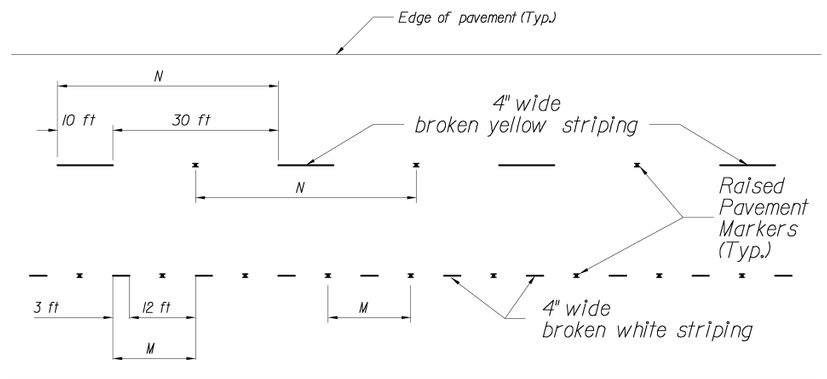

BROKEN SINGLE YELLOW AND
DOTTED WHITE STRIPING
WITH RAISED PAVEMENT MARKERS

U.S. DEPARTMENT OF TRANSPORTATION
FEDERAL HIGHWAY ADMINISTRATION
EASTERN FEDERAL LANDS HIGHWAY DIVISION

DETAIL
PAVEMENT MARKINGS
WITH AND WITHOUT
RAISED PAVEMENT MARKERS

DETAIL APPROVED FOR USE XX/XX

REVISED: XX/XX

DETAIL
E634-3

9/20/2007 8:58:04 AM a:\dlr000\lrfo\0\cad\plans\details\numbered-details\s31-dt634x03.dgn

NPS NO.	REG	STATE	PROJECT	SHEET NO.
412 / 41,911	NCR	MD	PRA CHOH 102 (1)	S32

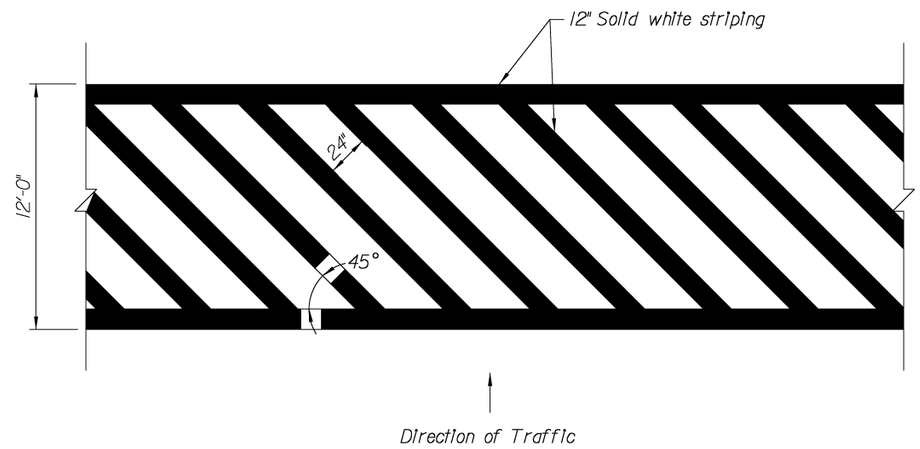

PEDESTRIAN CROSSWALK

SCALE: 1" = 4'

U.S. DEPARTMENT OF TRANSPORTATION
FEDERAL HIGHWAY ADMINISTRATION
EASTERN FEDERAL LANDS HIGHWAY DIVISION

DETAIL

PEDESTRIAN CROSSWALK

DETAIL APPROVED FOR USE XX/XX

REVISED: XX/XX

DETAIL E634-5

9/20/2007 8:58:05 AM a:\dlf0001\f70\0\cad\plans\details\numbered-details\s32-e634-5.dgn

NPS NO.	REG	STATE	PROJECT	SHEET NO.
412 / 41,911	NCR	MD	PRA CHOH 102 (1)	S33

LENGTH AND SPACING TABLE				
APPROACH SPEED*	LENGTH OF BUFFER SPACE	CHANNELIZING DEVICE		
		TAPER AREA	BUFFER SPACE	WORK SPACE
MPH	FEET	SPACING IN FEET		
25	155	20	50	50
30	200	20	60	60
35	250	20	70	70
40	305	20	80	80
45	360	20	90	90
50	425	20	100	100
55	495	20	110	110

* Approach speed based on the regulatory posted speed, not the advisory speed.

SIGN SPACING TABLE			
ROAD TYPE	DISTANCE BETWEEN SIGNS IN FEET		
	A	B	C
Urban 40 MPH and less	100	100	100
Urban 45 MPH and greater	350	350	350
Rural	500	500	500
Expressway/Freeway	1000	1500	2640

NOTE:

1. Signs are shown for one direction of travel only. Place devices similar to those depicted for the opposite direction of travel.
2. Final location and spacing of signs and devices may be changed to fit field conditions as approved by the CO.
3. For pilot car operation, mount the PILOT CAR FOLLOW ME (G20-4) sign at a conspicuous location on the rear of vehicle. Prominently display the name of the contractor on the pilot car.
4. If closure is completely within the project limits, eliminate the "ROAD WORK AHEAD" (W20-1) and "END ROAD WORK" (G20-2) signs.
5. For night time flagging operation, provide floodlighting at flagger stations.
6. Refer to Special Contract Requirements, Section 156, for project specific minimum width.
7. Do not allow equipment, materials, or vehicles to be parked or stored in the buffer space.
8. If signs will be in place more than 72 consecutive hours, use ground-mounted post.

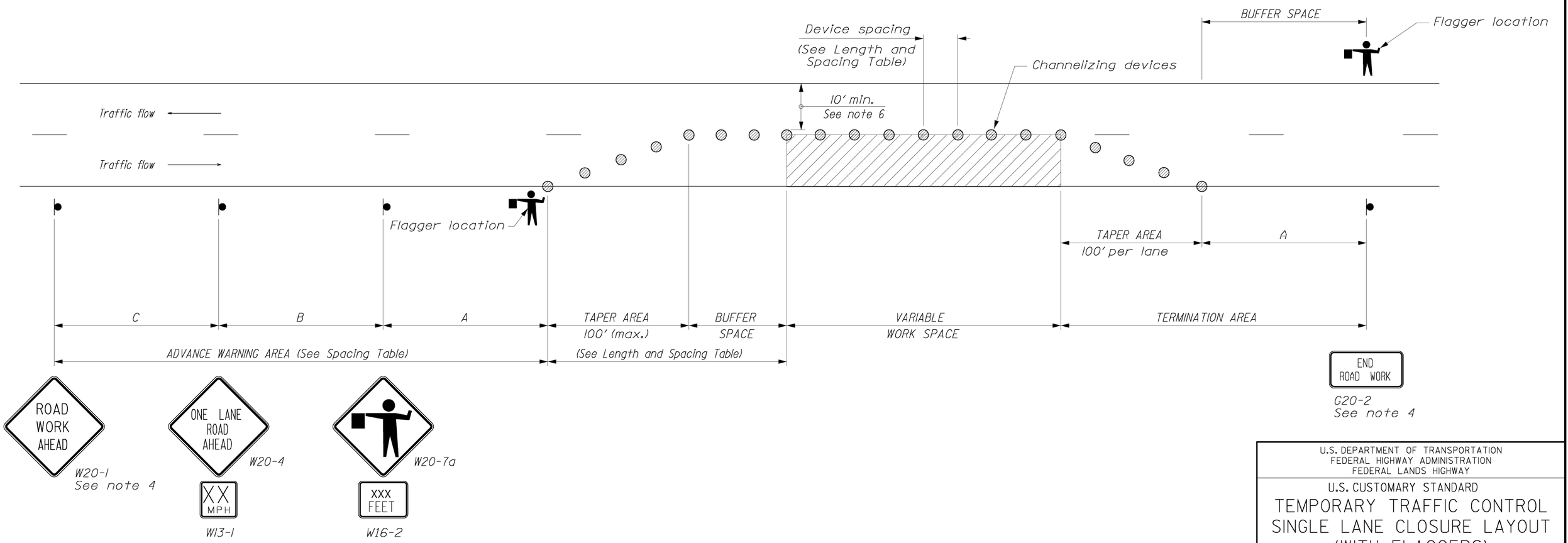

NO SCALE

U.S. DEPARTMENT OF TRANSPORTATION
FEDERAL HIGHWAY ADMINISTRATION
FEDERAL LANDS HIGHWAY

U.S. CUSTOMARY STANDARD

TEMPORARY TRAFFIC CONTROL SINGLE LANE CLOSURE LAYOUT (WITH FLAGGERS)

STANDARD APPROVED FOR USE 6/2005

REVISED: XX/XX

STANDARD 635-6

10/12/2007 1:58:25 PM O:\DIF000\IT00\CAD\Plans\Details\Numbered-Details\S33-st63506_US Customary.dgn

NPS NO.	REG	STATE	PROJECT	SHEET NO.
412 / 41,911	NCR	MD	PRA CHOH 102 (1)	S34

GENERAL NOTES

1. The duct banks shall be assembled with the joints staggered by at least 3-inches in the horizontal and vertical planes so that no two joints align.

2. For ten-foot lengths of duct, duct spacer assemblies shall be placed at 2'-6" on either side of the mid-point of a joint cluster. For twenty-foot lengths of duct, in addition to duct spacer assemblies being placed 2'-6" from each end, install spacer assemblies at 5'-0" intervals between the end spacers.

3. Prior to assembly, duct joint components shall be cleaned using the duct manufacturer's recommended cleaning agent and following the duct manufacturer's written instructions.

4. Ducts shall be joined and duct spacers attached to ducts using the duct manufacturer's recommended all weather quick-set solvent cement. Each duct assembly shall be tested with air pressurized 15 to 30 pounds and held within the assembled ducts for not less than ten minutes, without loss of pressure, to assure that all joints are watertight.

5. For all ductbank installation, fiberglass is required to be encased in the concrete.

6. The duct bank assemblies shall be placed on a three (3)-inches thick stabilization or "first" pour of concrete that shall have a rough raked finish.

7. When placing the first pour, install the anti-floatation tie-down/banding strapping for each bank of ducts.

8. Place and tie-down the duct assemblies on the dried stabilization pour. Tie-down duct bank assemblies and secure with double-locking strap heads.

9. Where the duct banks are routed beneath the roadway, re-inforcement is required. Around the perimeter of the duct bank envelopes, install #4 rebar in the dedicated holes in the manufactured duct spacers for each duct assembly. Wherever the interval between the rebar holes in the spacers is greater than 8-inches, but less than 12-inches the rebar shall be #5. Where spacers without dedicated rebar holes are used, the rebars shall be placed at 8-inch minimum intervals horizontally, top and sides, along the duct bank route. In all cases #5 rebar shall be installed, spaced at 18-inch intervals, to support the horizontal rebar runs before placement of the concrete envelope. There shall be a minimum concrete cover of 2-inches over the rebars.

10. Use female threaded PVC conduit adapter fittings to transition from PVC duct to RGS conduit not less than 10-feet from manholes. Terminate ducts with bell end conduit/duct fittings set flush with manhole or handhole interior surfaces.

11. Unless otherwise indicated, subterranean horizontal duct sweeps shall be 150-inch (12-feet, 6-inch) radius factory bends.

12. Unless otherwise indicated or required, subterranean vertical sweeps shall be 48-inch (4-feet) radius factory bends.

13. Duct stub-ups to equipment pads, unless otherwise required or shown in detail, shall be terminated with a conduit coupling set flush with the top of concrete. The coupling shall be closed with a thread-in recessed conduit plug.

14. During duct bank concrete envelope installation, duct assembly ends shall be closed with pull tab equipped push-in polyvinyl chloride (PVC) plastic duct plugs to prevent soil, water or concrete entry.

15. Do not permit the concrete to fall directly onto the ducts, protect the ducts during the concrete pour. Flow the concrete onto a plank and then spread the concrete into place and vibrate to remove excess air. Do not permit the concrete vibrator to come to contact with the ducts.

16. Backfill over cured concrete ductbank envelope in lifts of not more than 6-inches. Compact each lift to comply with compaction rate established in the civil portion of the special contract requirements or at minimum shall be equal to the surrounding soil condition

17. During the backfilling operation, install detectable warning tape not less than 9-inches or more than 12-inches below finished grade or roadway finished surface.

18. After installation is complete, a verification mandrel 12-inches long and not more than 1/4 inch diameter smaller than the trade size diameter of the duct shall be drawn through each duct to insure that ducts have not been deformed. Wherever a duct is found not to be able to pass the mandrel test, the contractor, at no additional cost to the contract, shall install a replacement for each failed duct.

19. After the mandrel has been drawn through the ducts and before any cables are drawn into the ducts, a duct brush and a swab shall be pulled through each duct to insure that the duct interior is clean. Replace duct plugs in the ends of unused ducts.

20. All PEPCO manhole frames and covers must be purchased from PEPCO.

21. PEPCO manholes must conform with Dwg. No. 6-2-0418 (1 through 5 of 5) for a 6'x12' manhole with a roadway roof.

22. Verizon manholes must be 4'-0"x6'-0" with standard knockout panels with a G-Type Frame and Cover. All Verizon manholeframe and covers shall have "COMMUNICATION" on coveror as directed by the CO.

23. Refer to PEPCO Dwg. No. 4-2-0468 in "Requirements and Specifications for High BVoltage Cuatomer Built Facilities" for instruction on PVC and fiberglass encasement.

24. All conduit and manhole construction is subject to inspection and approval by PEPCO and Verizon. Conduit and manholes must be inspected prior to pouring concrete for encasement or manhole structure, and then again prior to backfill the excavation. All ducts must be certified by pulling a mandrel 1/2" smaller than the duct diameter through each duct.

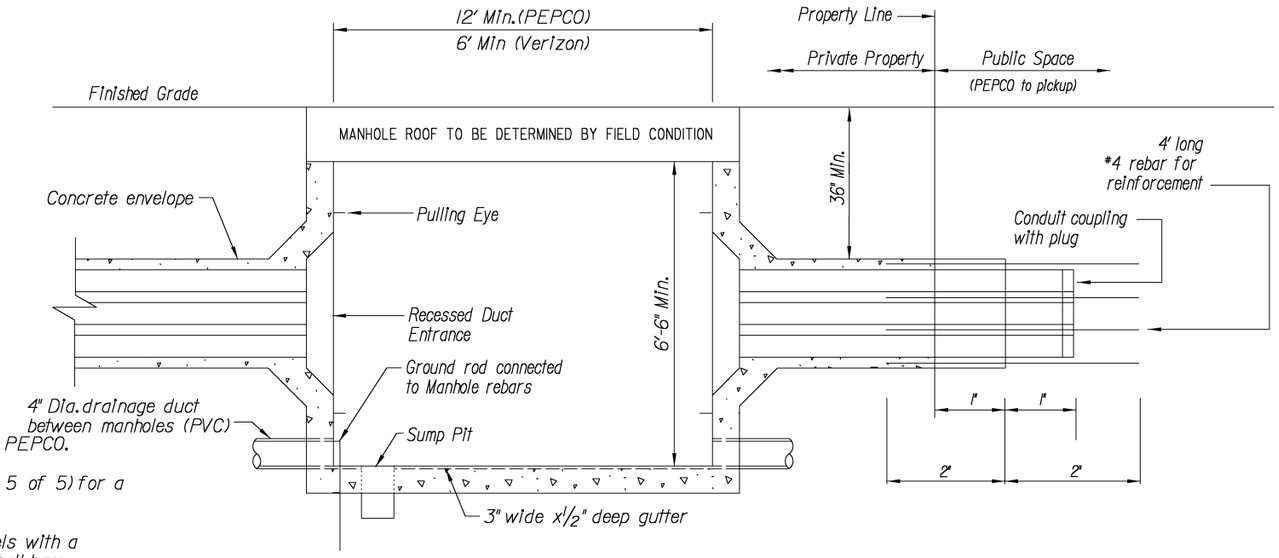

TYPICAL MANHOLE

Notes:

1. The conduit shall be placed in such a way as to stagger the location of the couplings both horizontally and vertically.
2. Base and intermediate spacers are to be interlocked both vertically and horizontally.
3. Base spacers provide a 3" separation between bottom row of ducts and trench floor. Intermediate spacers provide a 1 1/2" separation between adjacent ducts.
4. Spacers from different manufacturers may not be compatible. It is important to use the correct spacers for proper interlock.
5. For 20-foot long conduit, one additional spacer is required at the midspan.
6. When tying the duct bank with tying wire, be careful not to overtighten the wire and cut the ducts
7. The full height of the conduit formation shall be constructed before placement.

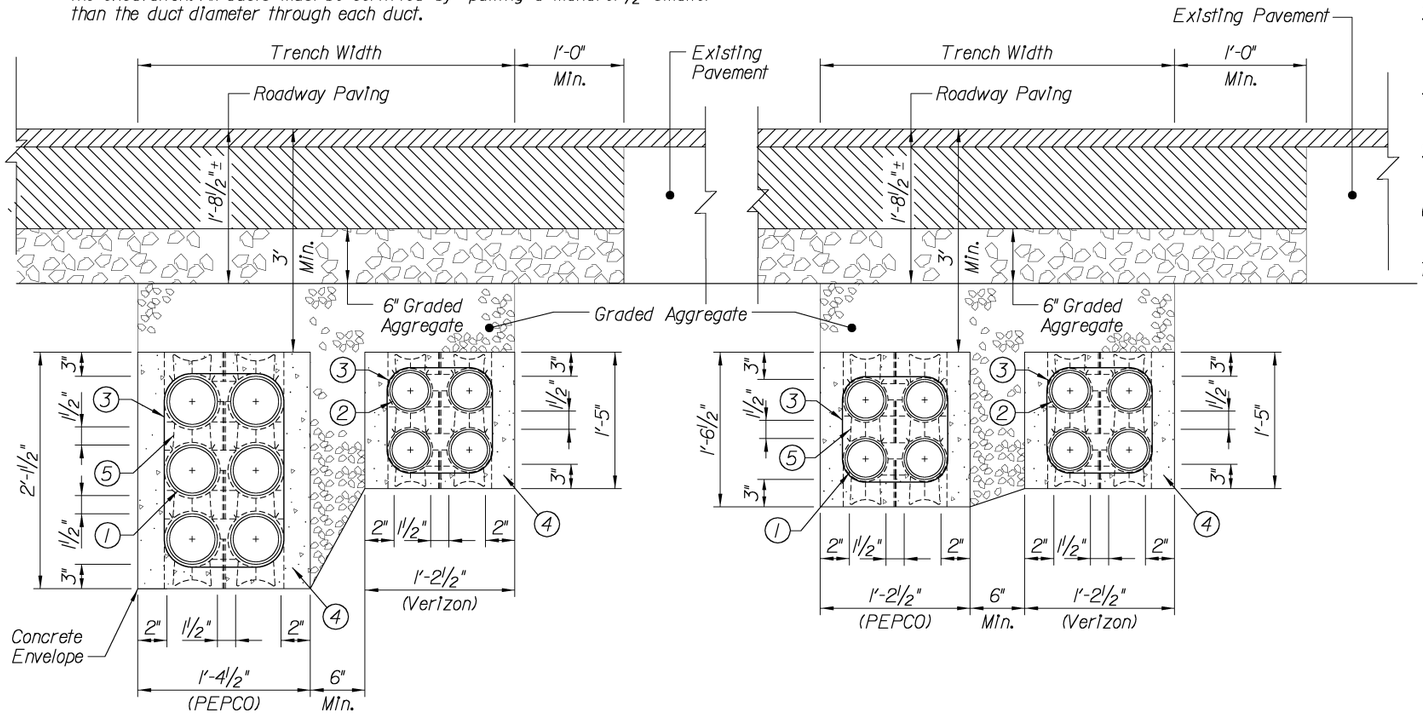

SECTION A-A

SECTION B-B

CONDUIT INSTALLATION/DUCT BANK DETAIL

Not to Scale

LEGEND

1. 5-Inch Fiberglass Duct
2. 4-Inch Schedule 40 PVC Duct
3. Tie-down strapping (1/2-Inch x 250 lb. min. tensile strength)
4. Fiberglass encased concrete envelope (3000 psi minimum)
5. Duct spacer

U.S. DEPARTMENT OF TRANSPORTATION
FEDERAL HIGHWAY ADMINISTRATION
EASTERN FEDERAL LANDS HIGHWAY DIVISION

DETAIL

CONDUIT INSTALLATION/ DUCT BANK DETAIL

DETAIL APPROVED FOR USE XX/XX

REVISED: XX/XX

DETAIL E636-B

9/20/2007 8:58:06 AM c:\dlf0001\f10\d\cad\plans\details\numbered-details\s34-e636-b.dgn

NPS NO.	REG	STATE	PROJECT	SHEET NO.
412 / 41911	NCR	MD	PRA-CHOH 102 (1)	T1

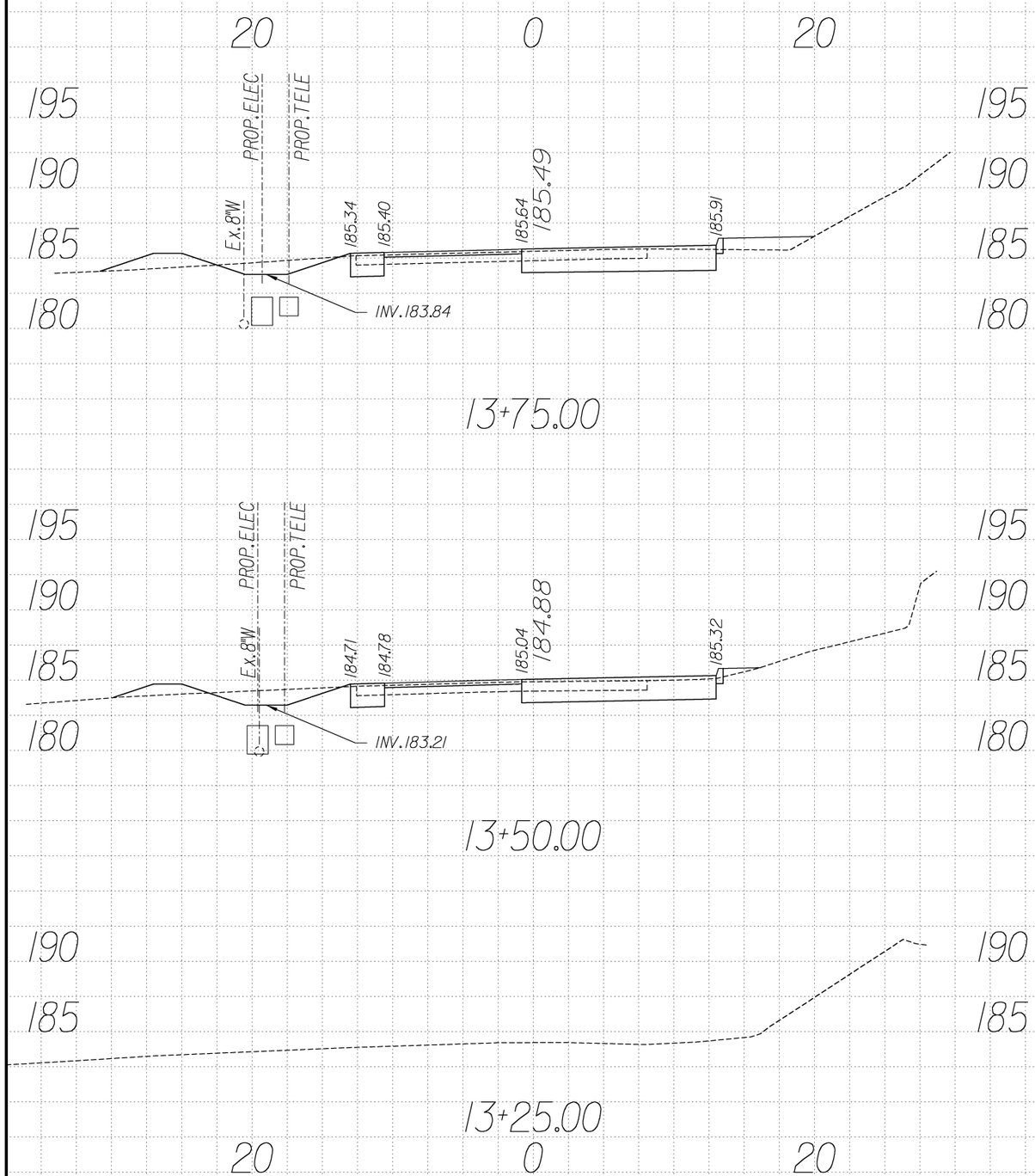

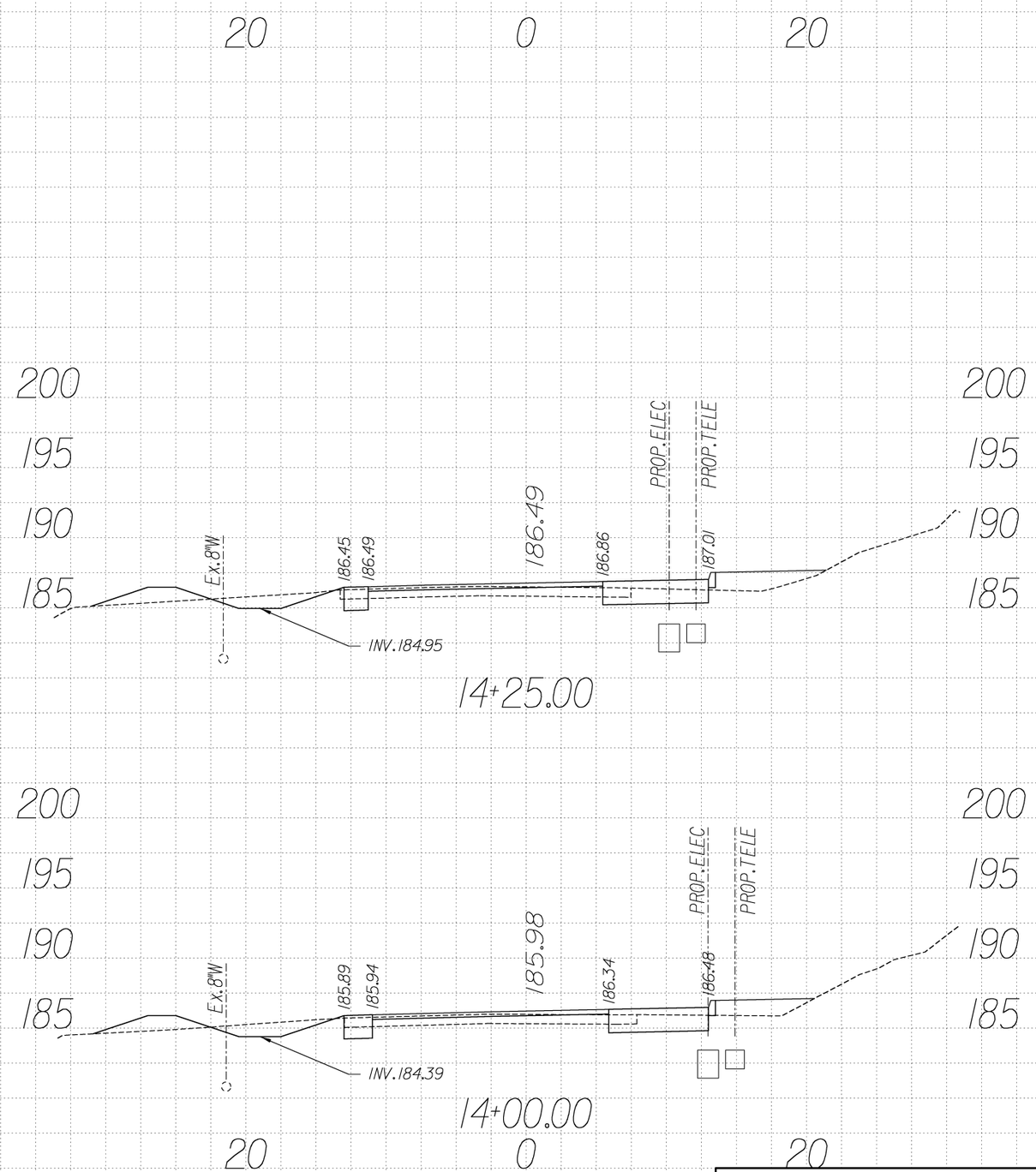

U S DEPARTMENT OF TRANSPORTATION
FEDERAL HIGHWAY ADMINISTRATION
EASTERN FEDERAL LANDS HIGHWAY DIVISION
STERLING, VIRGINIA

C&O CANAL NATIONAL HISTORIC PARK
GREAT FALL ENTRANCE ROAD & PARKING LOTS

CROSS SECTIONS

Sta. 13+25 to 14+25

0 5 10
SCALE IN FEET

NPS NO.	REG	STATE	PROJECT	SHEET NO.
412 / 41911	NCR	MD	PRA-CHOH 102 (1)	T2

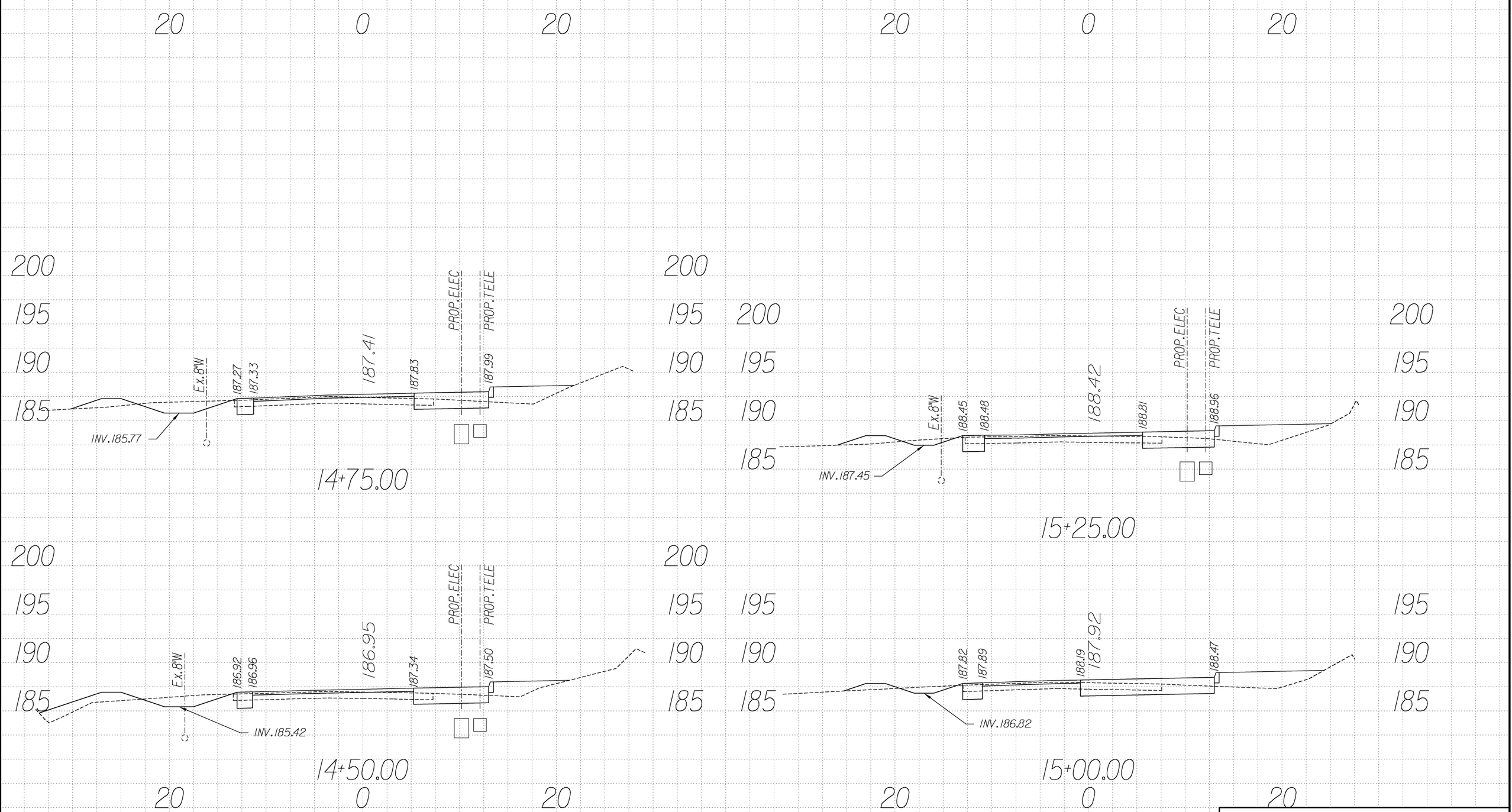

U S DEPARTMENT OF TRANSPORTATION
FEDERAL HIGHWAY ADMINISTRATION
EASTERN FEDERAL LANDS HIGHWAY DIVISION
STERLING, VIRGINIA

C&O CANAL NATIONAL HISTORIC PARK
GREAT FALL ENTRANCE ROAD & PARKING LOTS

CROSS SECTIONS
Sta. 14+50 to 15+25

0 5 10
SCALE IN FEET

NPS NO.	REG	STATE	PROJECT	SHEET NO.
412 / 41911	NCR	MD	PRA-CHOH 102 (1)	T3

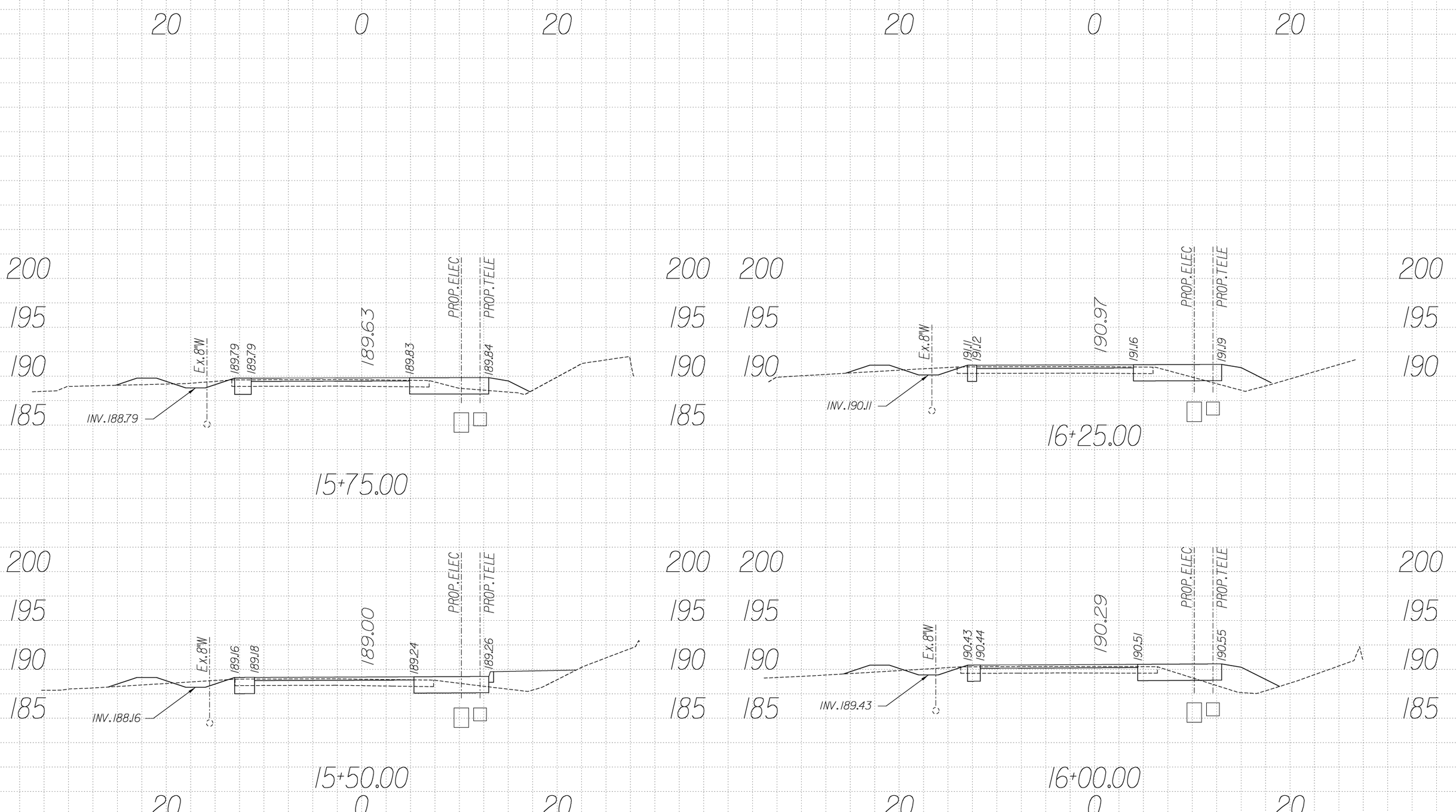

U S DEPARTMENT OF TRANSPORTATION
FEDERAL HIGHWAY ADMINISTRATION
EASTERN FEDERAL LANDS HIGHWAY DIVISION
STERLING, VIRGINIA

C&O CANAL NATIONAL HISTORIC PARK
GREAT FALL ENTRANCE ROAD & PARKING LOTS

CROSS SECTIONS
Sta. 15+50 to 16+25

0 5 10
SCALE IN FEET

NPS NO.	REG	STATE	PROJECT	SHEET NO.
412 / 41911	NCR	MD	PRA-CHOH 102 (1)	T4

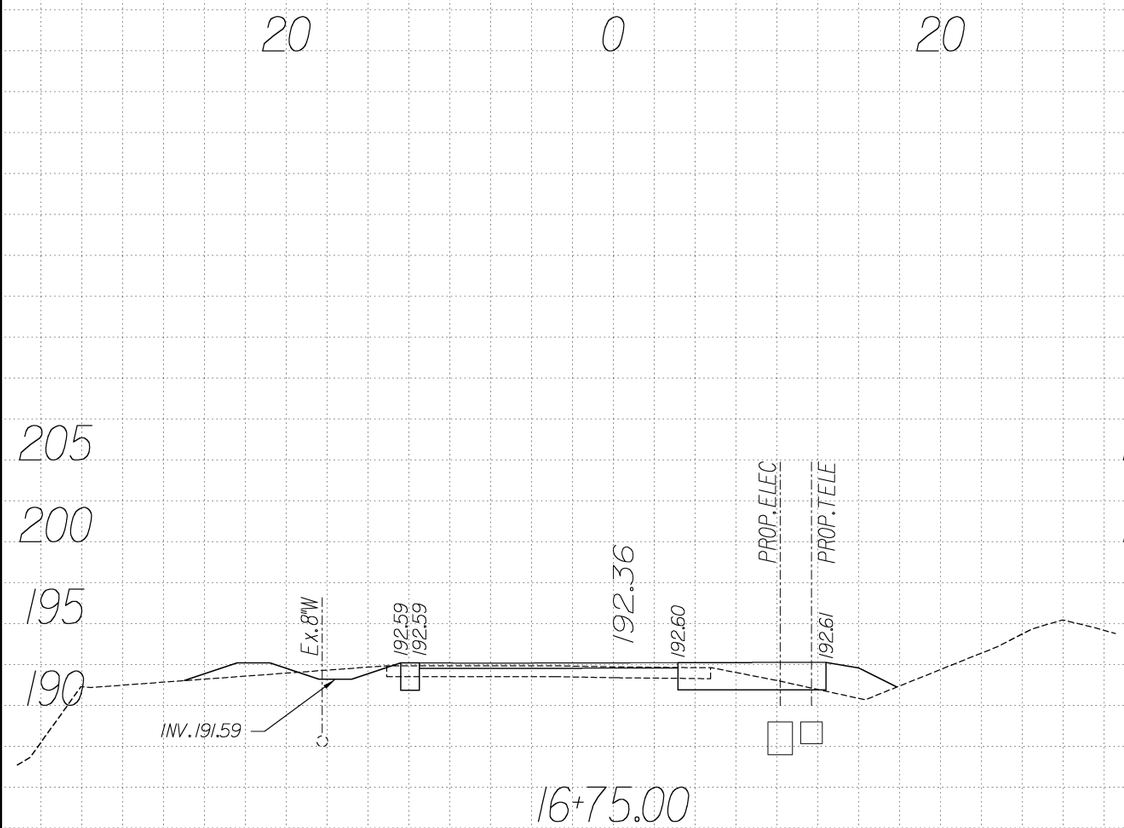

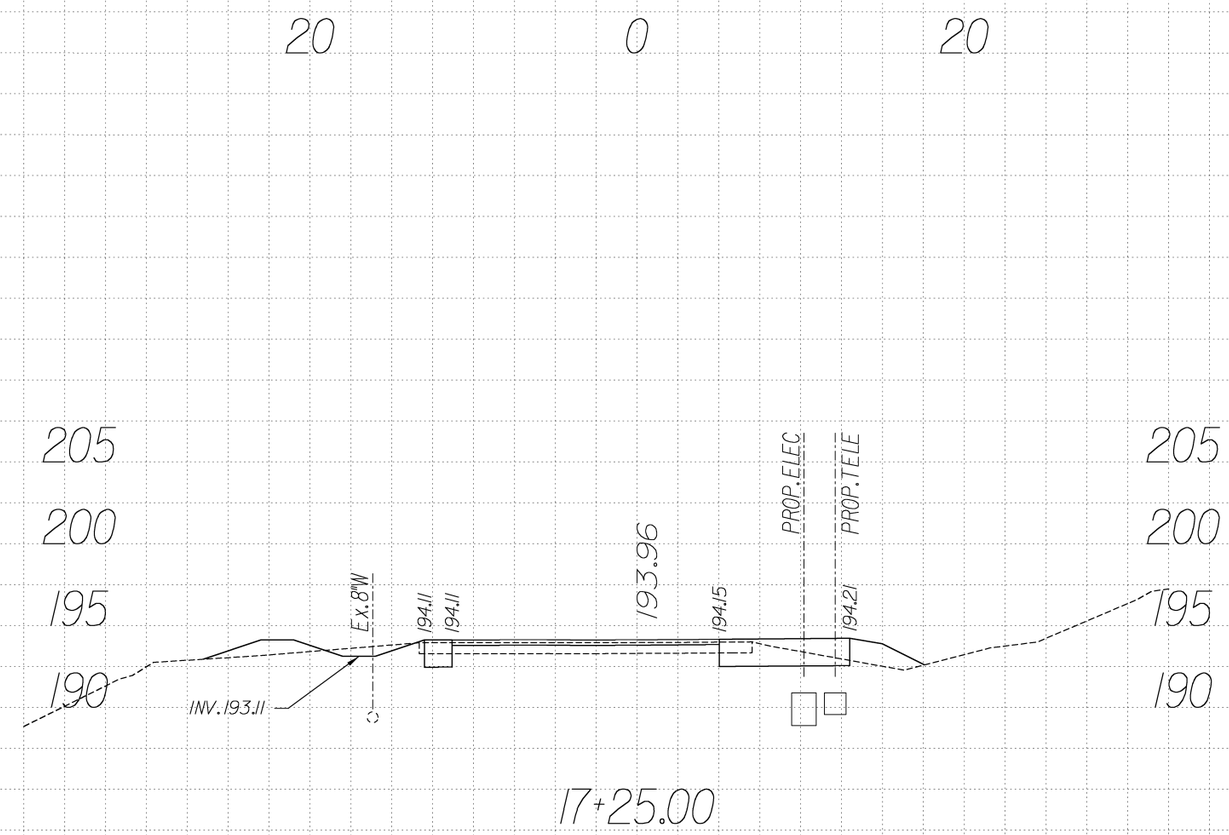

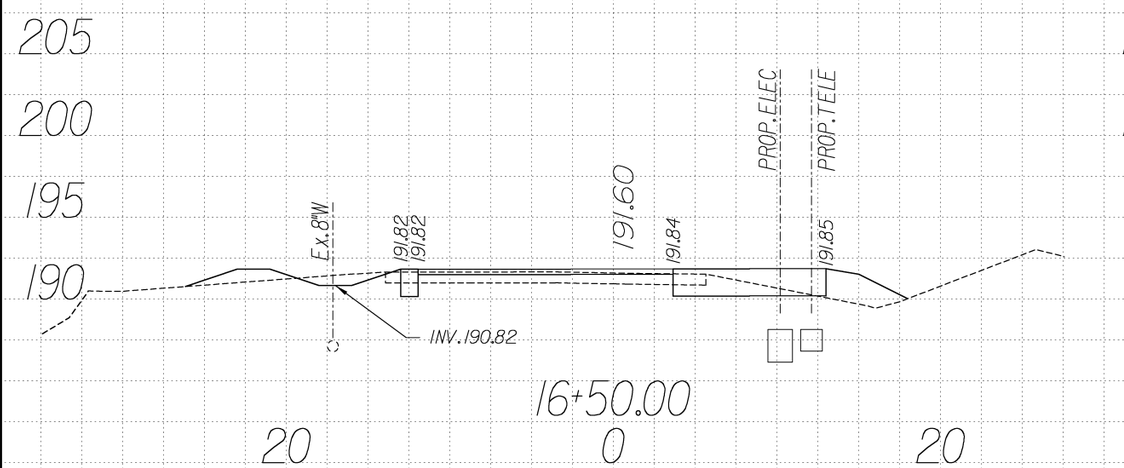

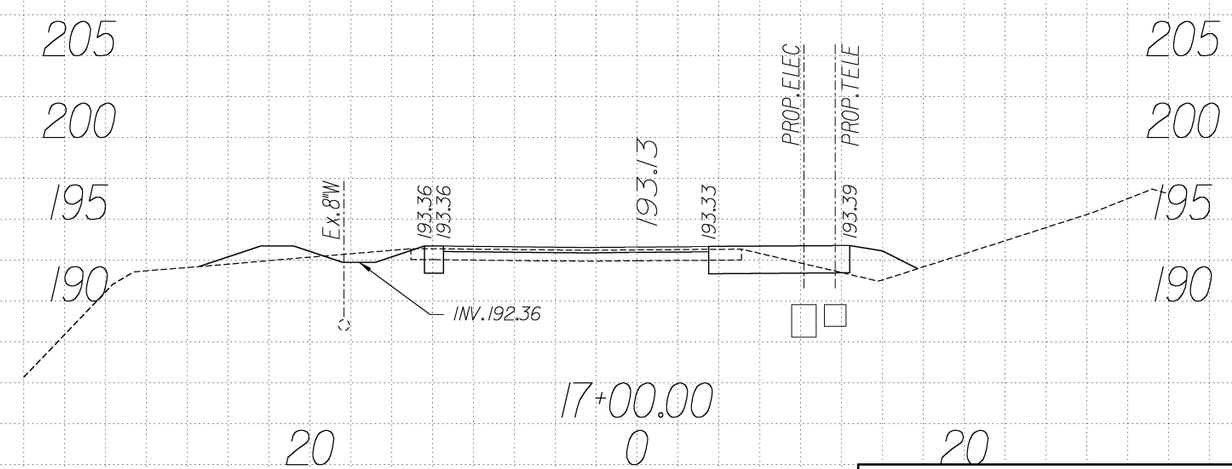

U S DEPARTMENT OF TRANSPORTATION
FEDERAL HIGHWAY ADMINISTRATION
EASTERN FEDERAL LANDS HIGHWAY DIVISION
STERLING, VIRGINIA

C&O CANAL NATIONAL HISTORIC PARK
GREAT FALL ENTRANCE ROAD & PARKING LOTS

CROSS SECTIONS
Sta. 16+50 to 17+25

0 5 10
SCALE IN FEET

NPS NO.	REG	STATE	PROJECT	SHEET NO.
412 / 41911	NCR	MD	PRA-CHOH 102 (1)	T5

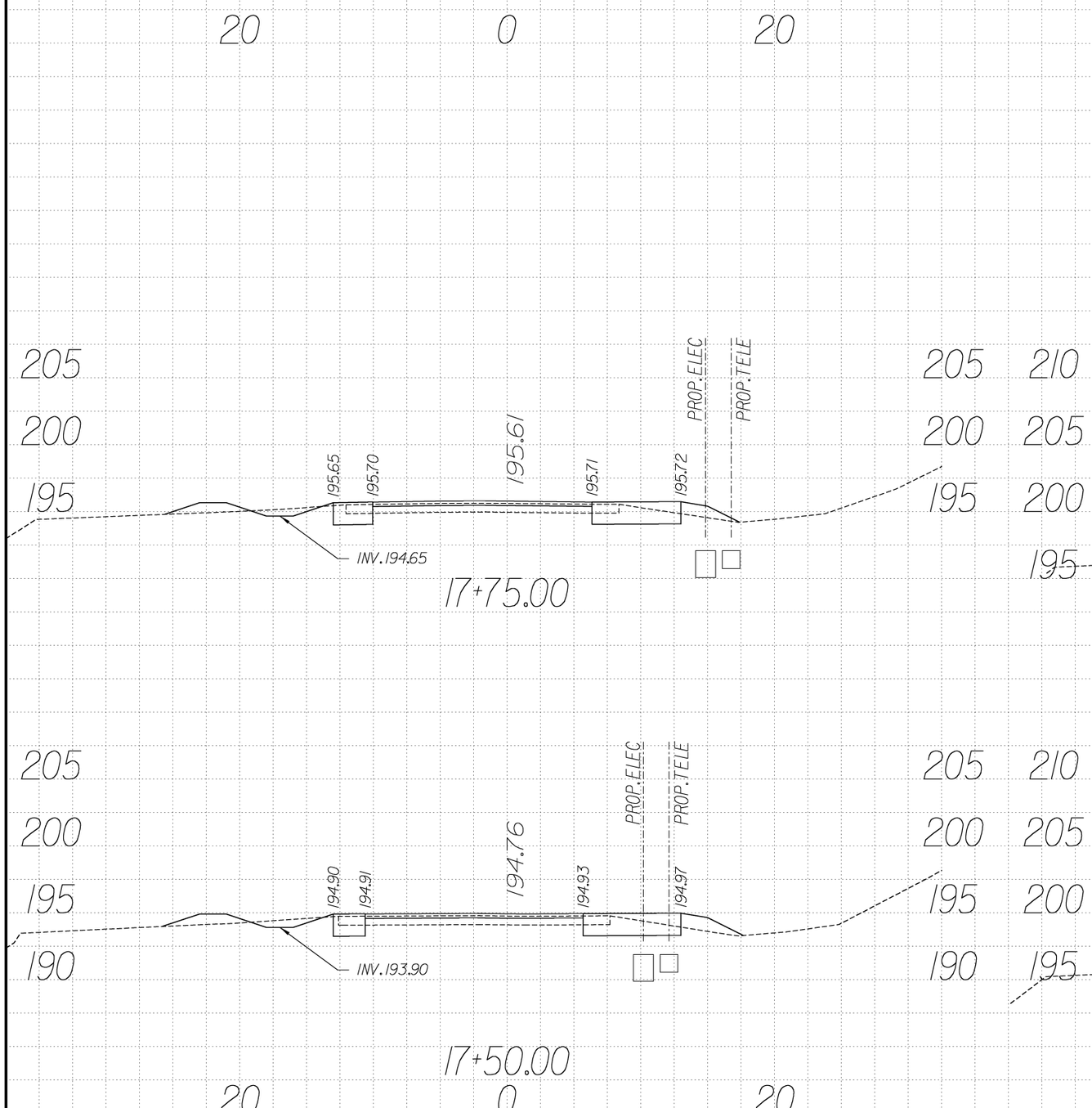

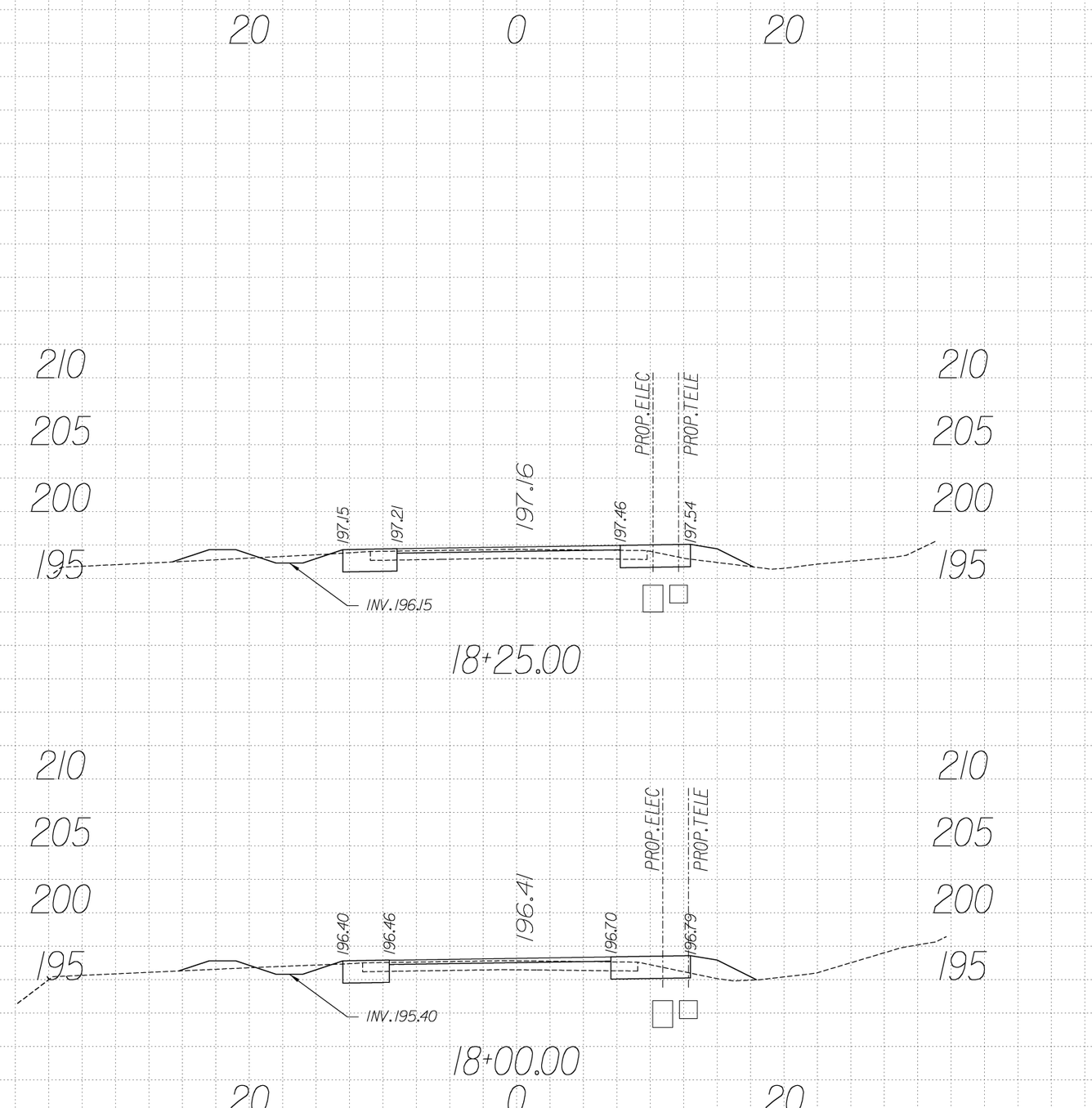

U S DEPARTMENT OF TRANSPORTATION
FEDERAL HIGHWAY ADMINISTRATION
EASTERN FEDERAL LANDS HIGHWAY DIVISION
STERLING, VIRGINIA

C&O CANAL NATIONAL HISTORIC PARK
GREAT FALL ENTRANCE ROAD & PARKING LOTS

CROSS SECTIONS
Sta. 17+50 to 18+25

0 5 10
SCALE IN FEET

NPS NO.	REG	STATE	PROJECT	SHEET NO.
412 / 41911	NCR	MD	PRA-CHOH 102 (1)	T6

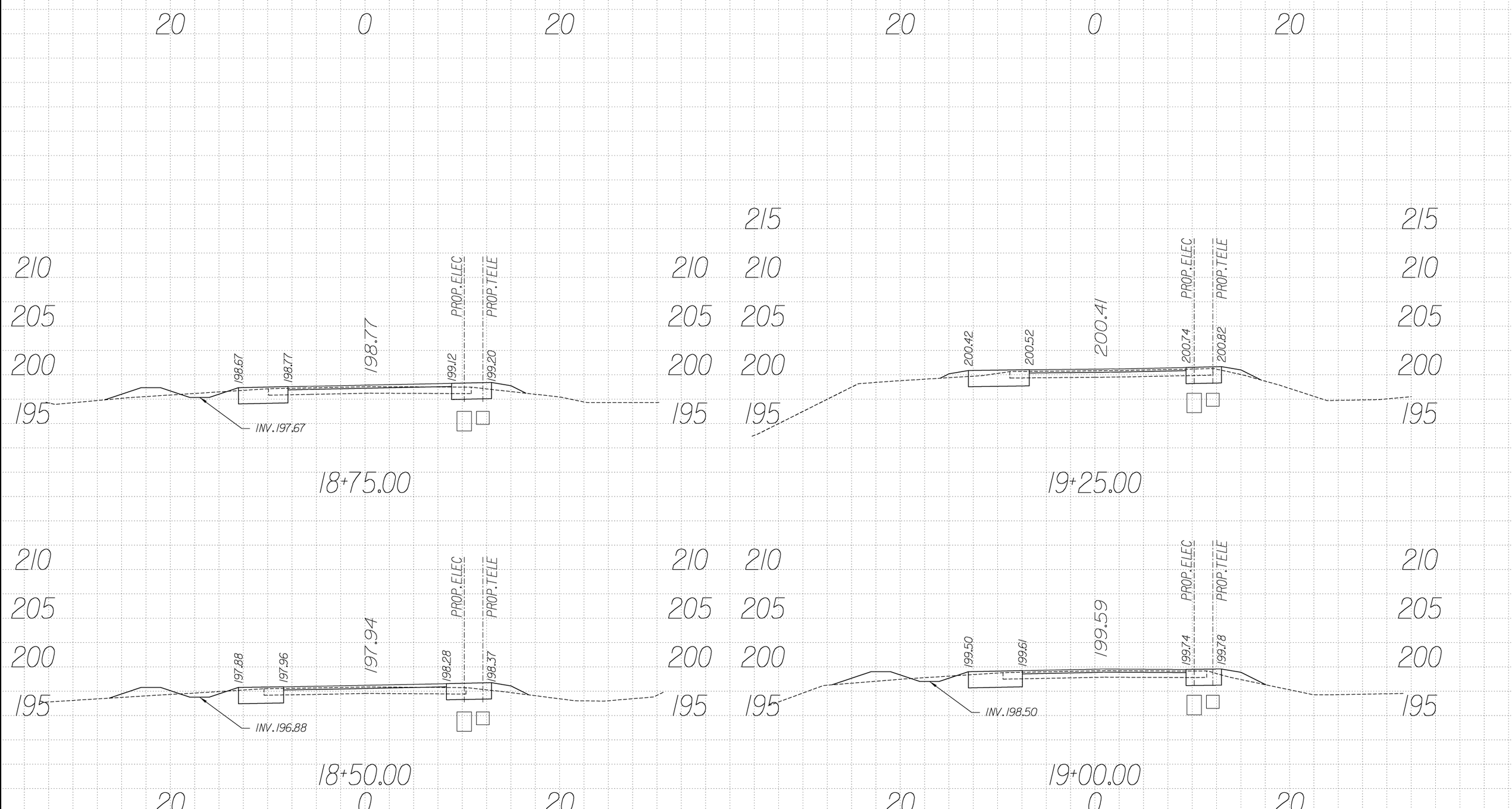

U S DEPARTMENT OF TRANSPORTATION
FEDERAL HIGHWAY ADMINISTRATION
EASTERN FEDERAL LANDS HIGHWAY DIVISION
STERLING, VIRGINIA

C&O CANAL NATIONAL HISTORIC PARK
GREAT FALL ENTRANCE ROAD & PARKING LOTS

CROSS SECTIONS
Sta. 18+50 to 19+25

0 5 10
SCALE IN FEET

NPS NO.	REG	STATE	PROJECT	SHEET NO.
412 / 41911	NCR	MD	PRA-CHOH 102 (1)	T7

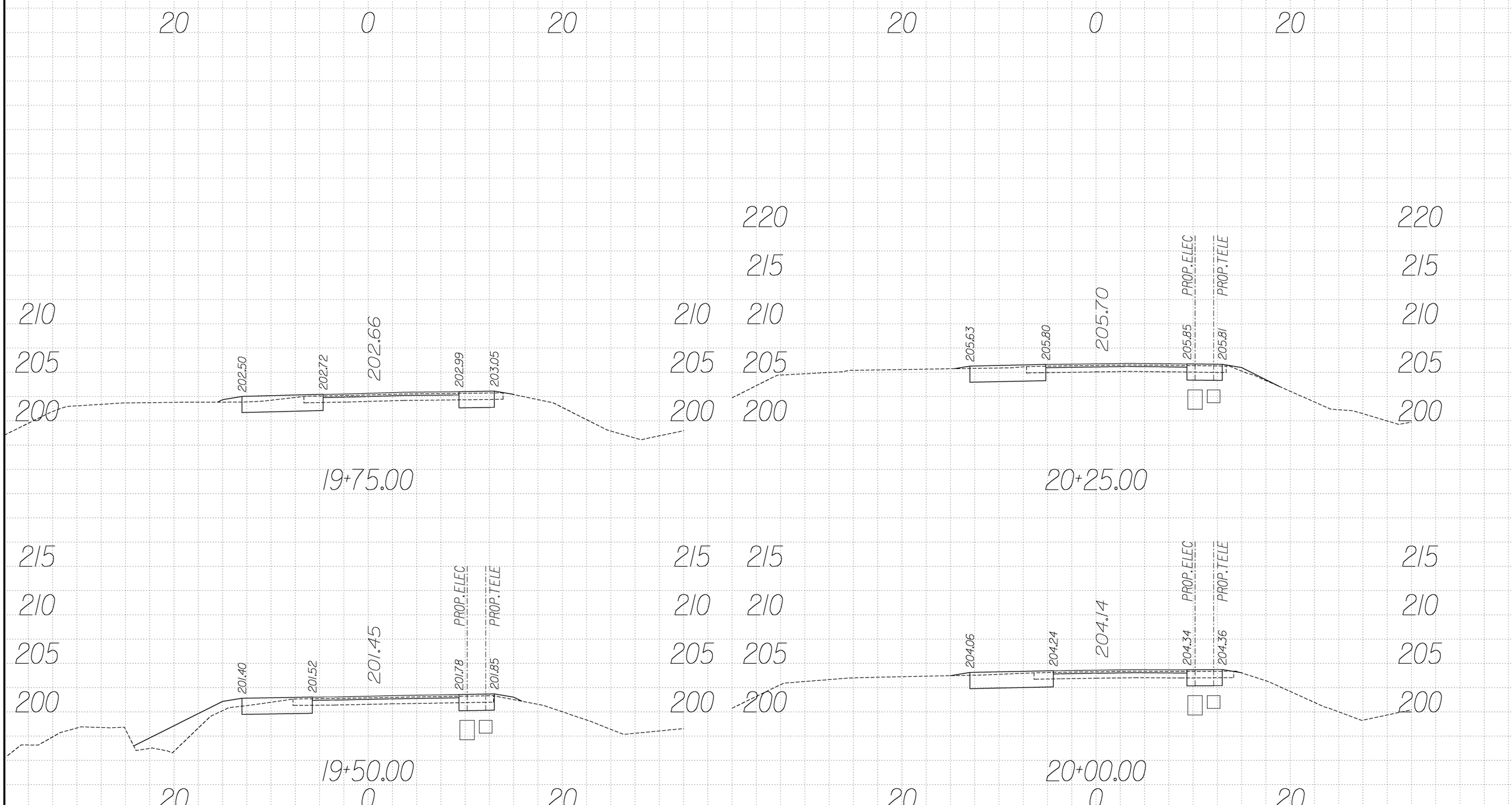

U S DEPARTMENT OF TRANSPORTATION
FEDERAL HIGHWAY ADMINISTRATION
EASTERN FEDERAL LANDS HIGHWAY DIVISION
STERLING, VIRGINIA

C&O CANAL NATIONAL HISTORIC PARK
GREAT FALL ENTRANCE ROAD & PARKING LOTS

CROSS SECTIONS
Sta. 19+50 to 20+25

0 5 10
SCALE IN FEET

NPS NO.	REG	STATE	PROJECT	SHEET NO.
412 / 41911	NCR	MD	PRA-CHOH 102 (1)	T8

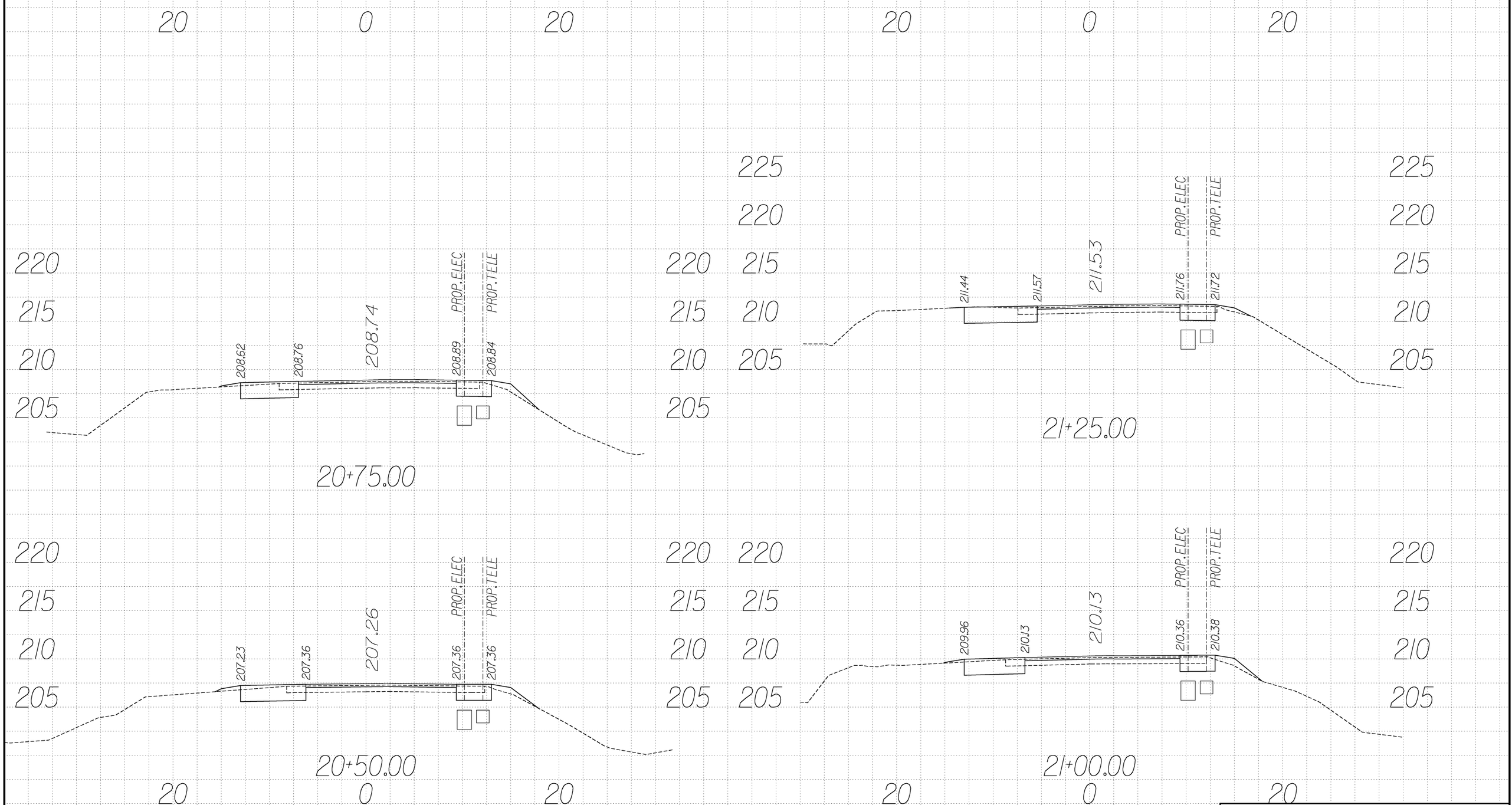

U S DEPARTMENT OF TRANSPORTATION
FEDERAL HIGHWAY ADMINISTRATION
EASTERN FEDERAL LANDS HIGHWAY DIVISION
STERLING, VIRGINIA

C&O CANAL NATIONAL HISTORIC PARK
GREAT FALL ENTRANCE ROAD & PARKING LOTS

CROSS SECTIONS
Sta. 20+50 to 21+25

0 5 10
SCALE IN FEET

NPS NO.	REG	STATE	PROJECT	SHEET NO.
412 / 41911	NCR	MD	PRA-CHOH 102 (1)	T9

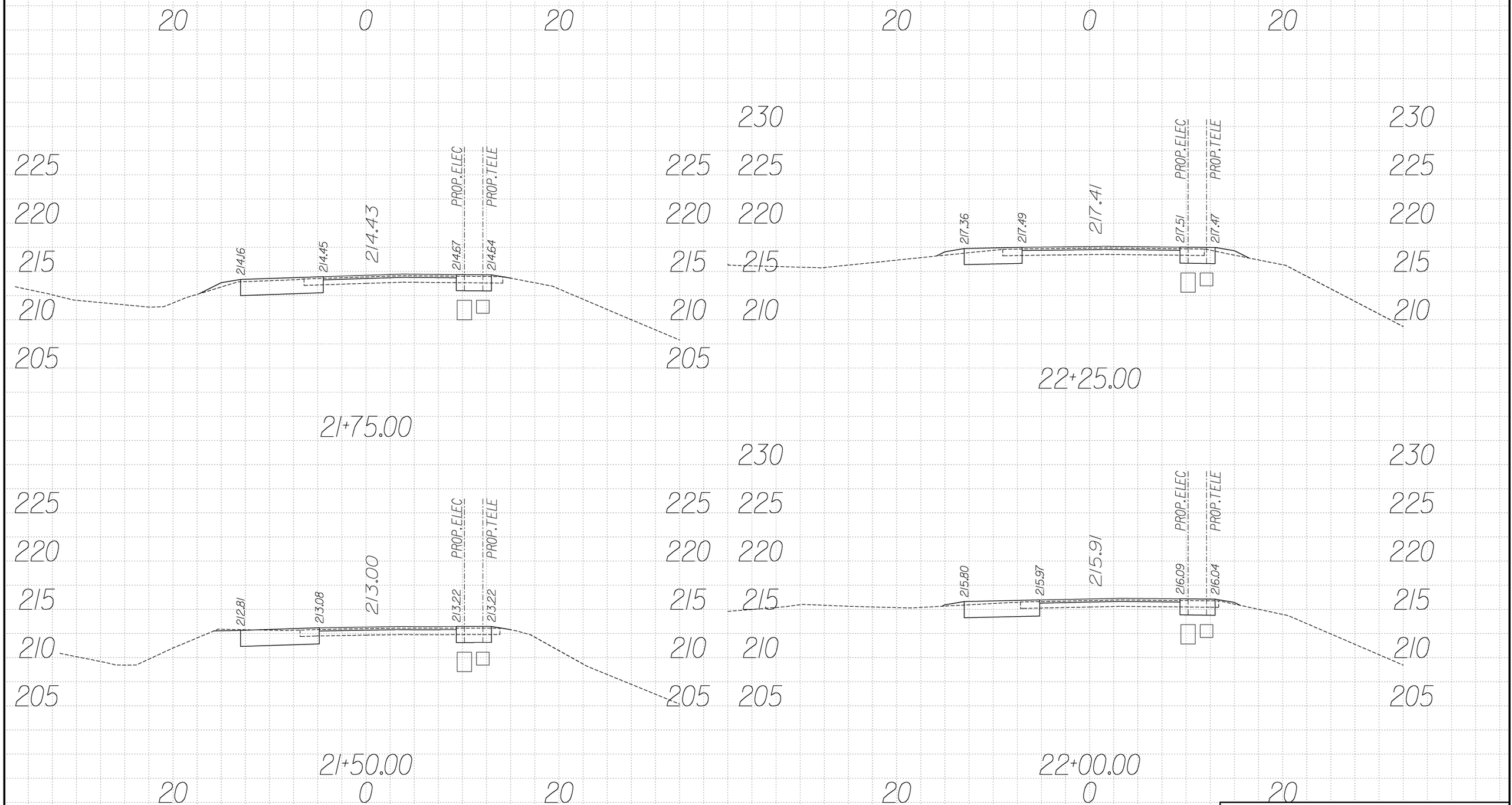

U S DEPARTMENT OF TRANSPORTATION
FEDERAL HIGHWAY ADMINISTRATION
EASTERN FEDERAL LANDS HIGHWAY DIVISION
STERLING, VIRGINIA

C&O CANAL NATIONAL HISTORIC PARK
GREAT FALL ENTRANCE ROAD & PARKING LOTS

CROSS SECTIONS

Sta. 21+50 to 22+25

0 5 10
SCALE IN FEET

NPS NO.	REG	STATE	PROJECT	SHEET NO.
412 / 41911	NCR	MD	PRA-CHOH 102 (1)	T10

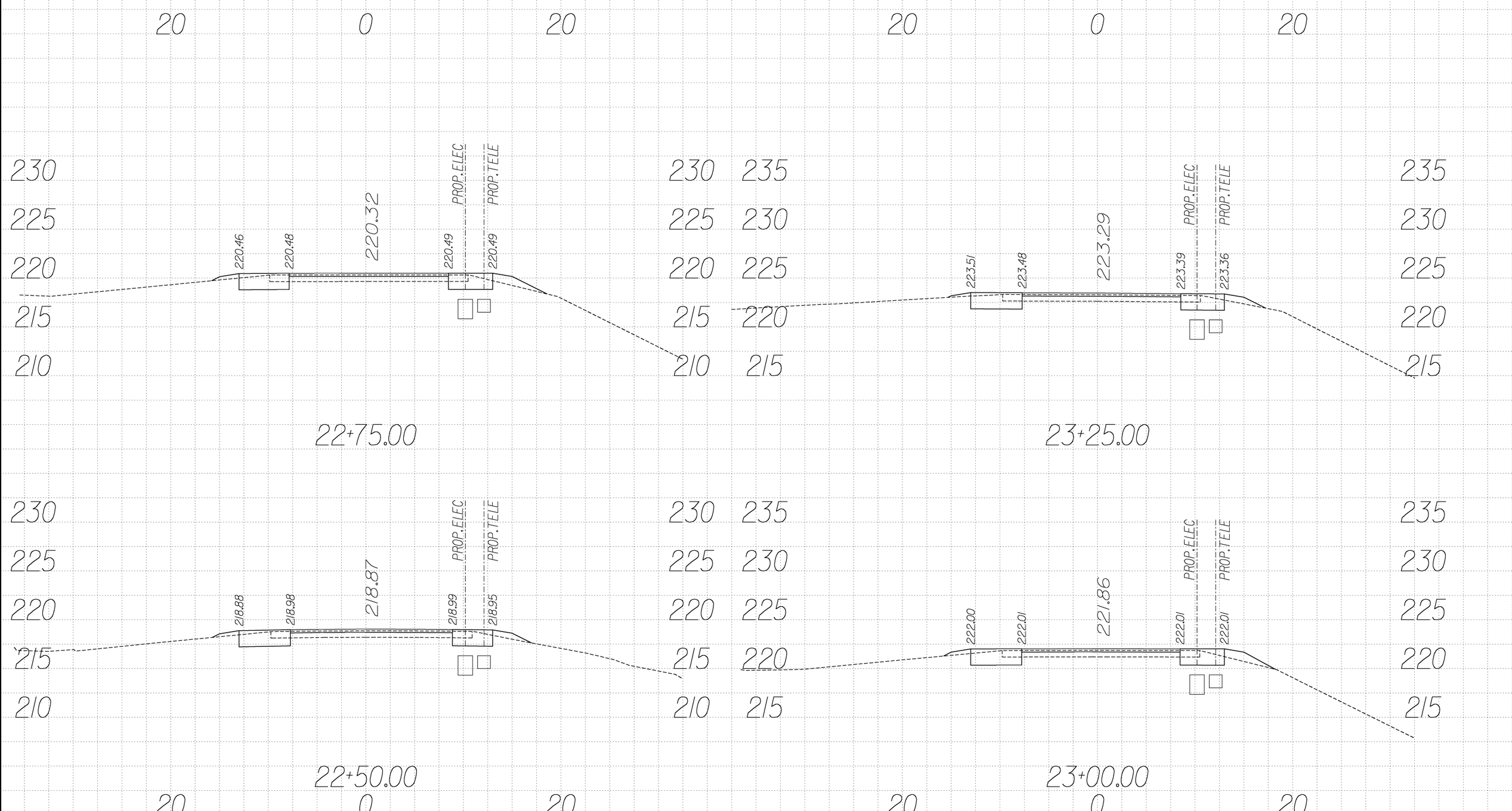

U S DEPARTMENT OF TRANSPORTATION
FEDERAL HIGHWAY ADMINISTRATION
EASTERN FEDERAL LANDS HIGHWAY DIVISION
STERLING, VIRGINIA

C&O CANAL NATIONAL HISTORIC PARK
GREAT FALL ENTRANCE ROAD & PARKING LOTS

CROSS SECTIONS
Sta. 22+50 to 23+25

0 5 10
SCALE IN FEET

NPS NO.	REG	STATE	PROJECT	SHEET NO.
412 / 41911	NCR	MD	PRA-CHOH 102 (1)	T11

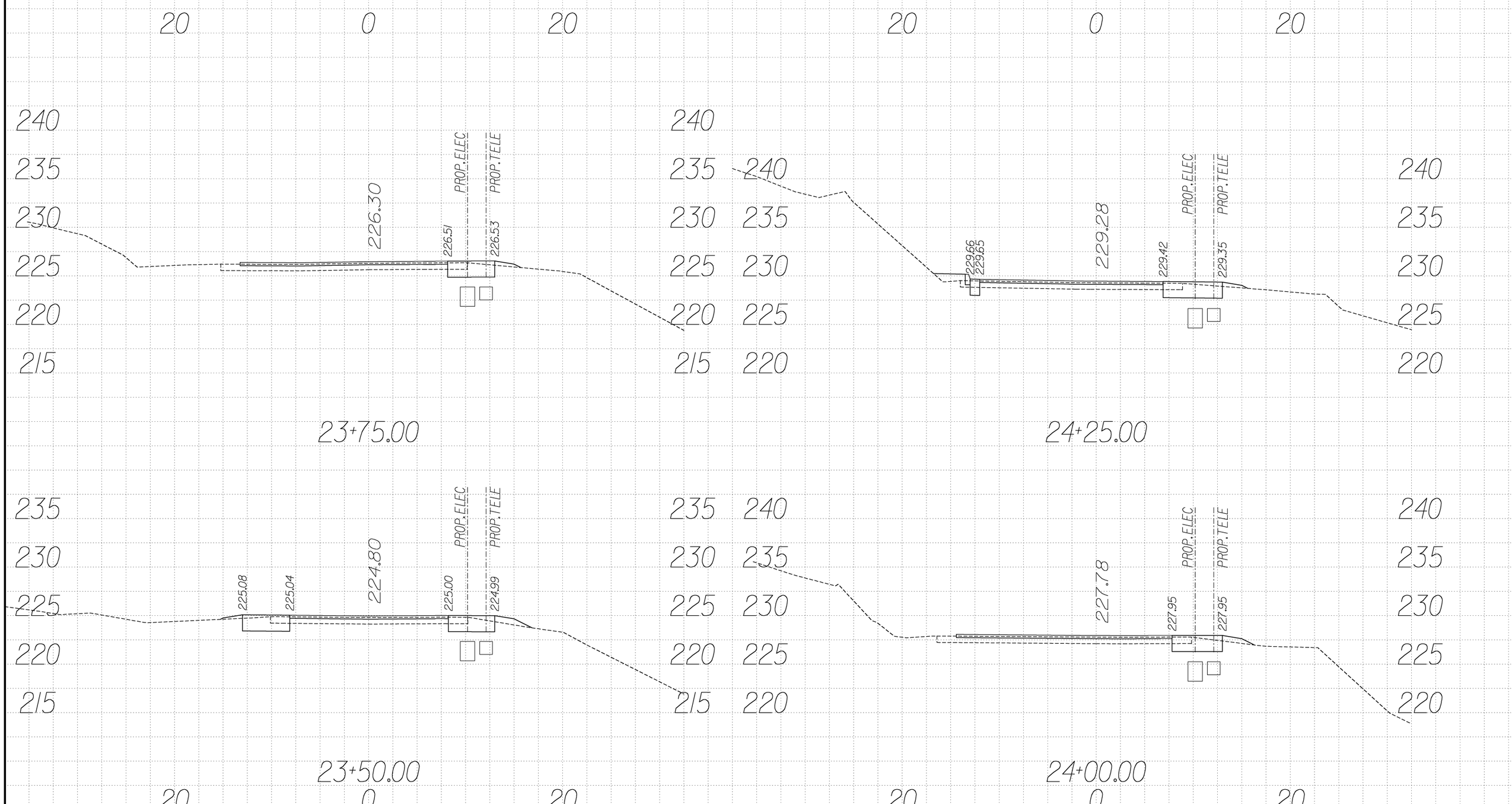

U S DEPARTMENT OF TRANSPORTATION
FEDERAL HIGHWAY ADMINISTRATION
EASTERN FEDERAL LANDS HIGHWAY DIVISION
STERLING, VIRGINIA

C&O CANAL NATIONAL HISTORIC PARK
GREAT FALL ENTRANCE ROAD & PARKING LOTS

CROSS SECTIONS
Sta. 23+50 to 24+25

0 5 10
SCALE IN FEET

NPS NO.	REG	STATE	PROJECT	SHEET NO.
412 / 41911	NCR	MD	PRA-CHOH 102 (1)	T12

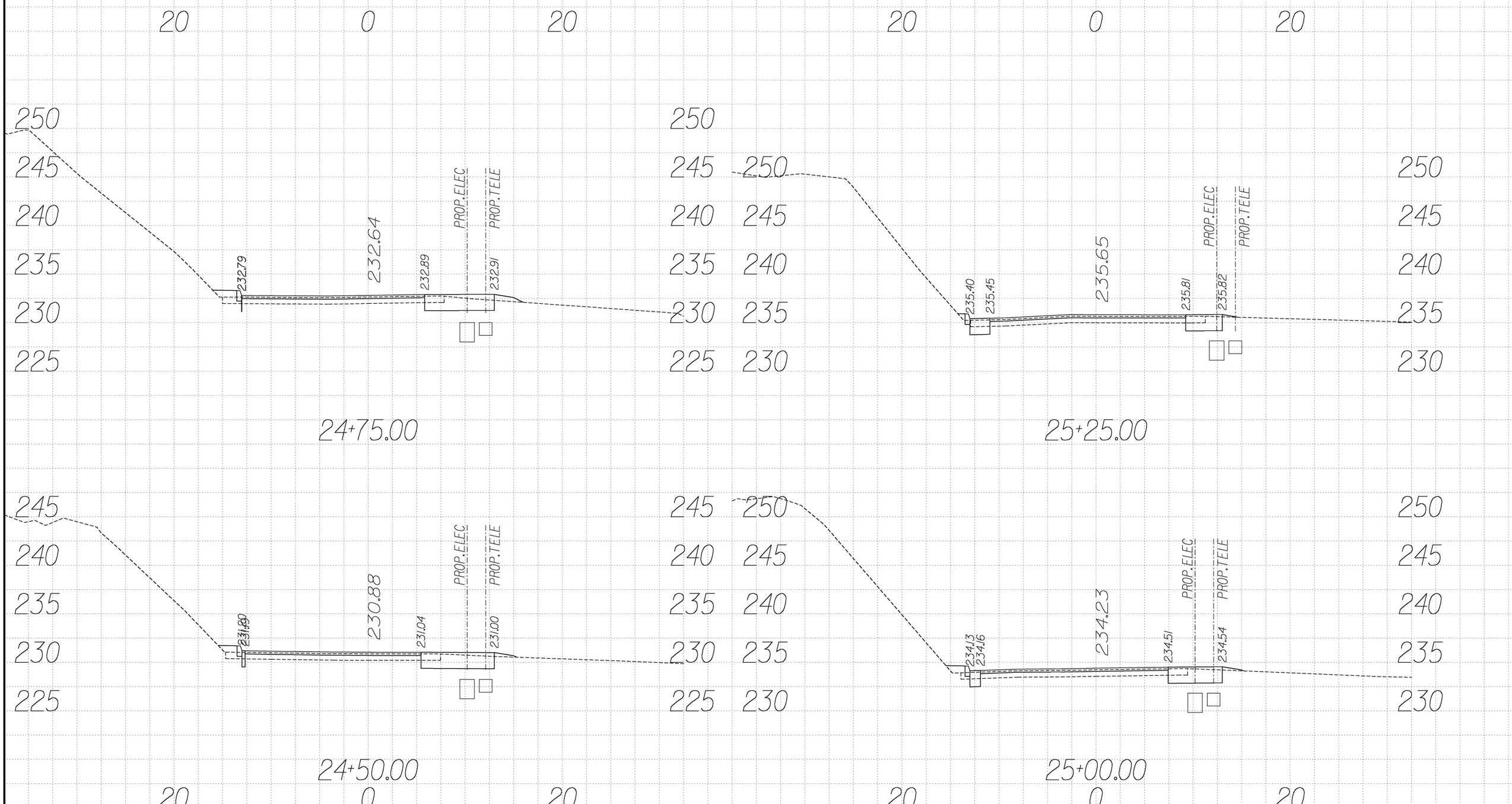

U S DEPARTMENT OF TRANSPORTATION
FEDERAL HIGHWAY ADMINISTRATION
EASTERN FEDERAL LANDS HIGHWAY DIVISION
STERLING, VIRGINIA

C&O CANAL NATIONAL HISTORIC PARK
GREAT FALL ENTRANCE ROAD & PARKING LOTS

CROSS SECTIONS
Sta. 24+50 to 25+25

0 5 10
SCALE IN FEET

NPS NO.	REG	STATE	PROJECT	SHEET NO.
412 / 41911	NCR	MD	PRA-CHOH 102 (1)	T13

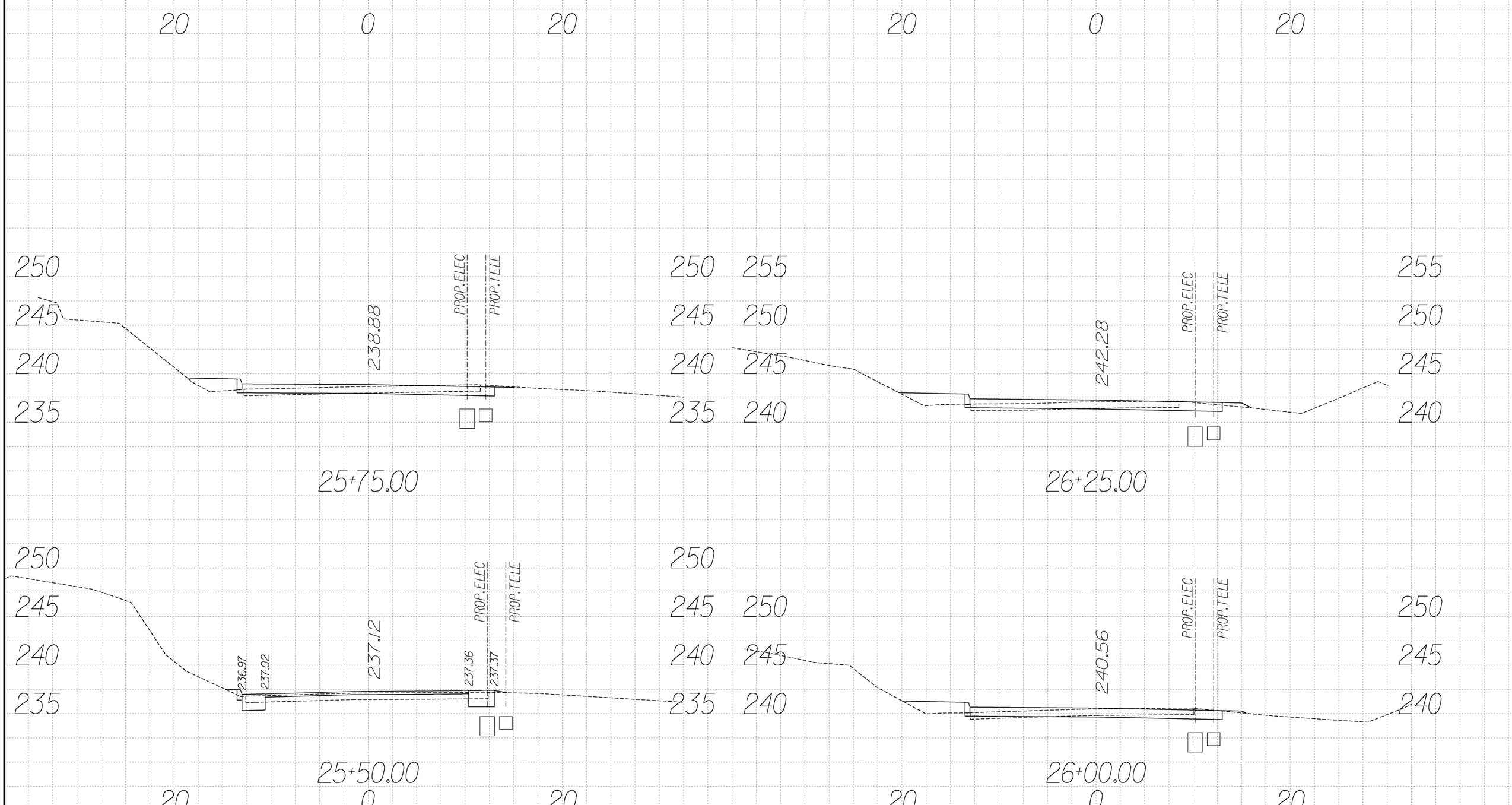

U S DEPARTMENT OF TRANSPORTATION
FEDERAL HIGHWAY ADMINISTRATION
EASTERN FEDERAL LANDS HIGHWAY DIVISION
STERLING, VIRGINIA

C&O CANAL NATIONAL HISTORIC PARK
GREAT FALL ENTRANCE ROAD & PARKING LOTS

CROSS SECTIONS
Sta. 25+50 to 26+25

0 5 10
SCALE IN FEET

NPS NO.	REG	STATE	PROJECT	SHEET NO.
412 / 41911	NCR	MD	PRA-CHOH 102 (1)	T14

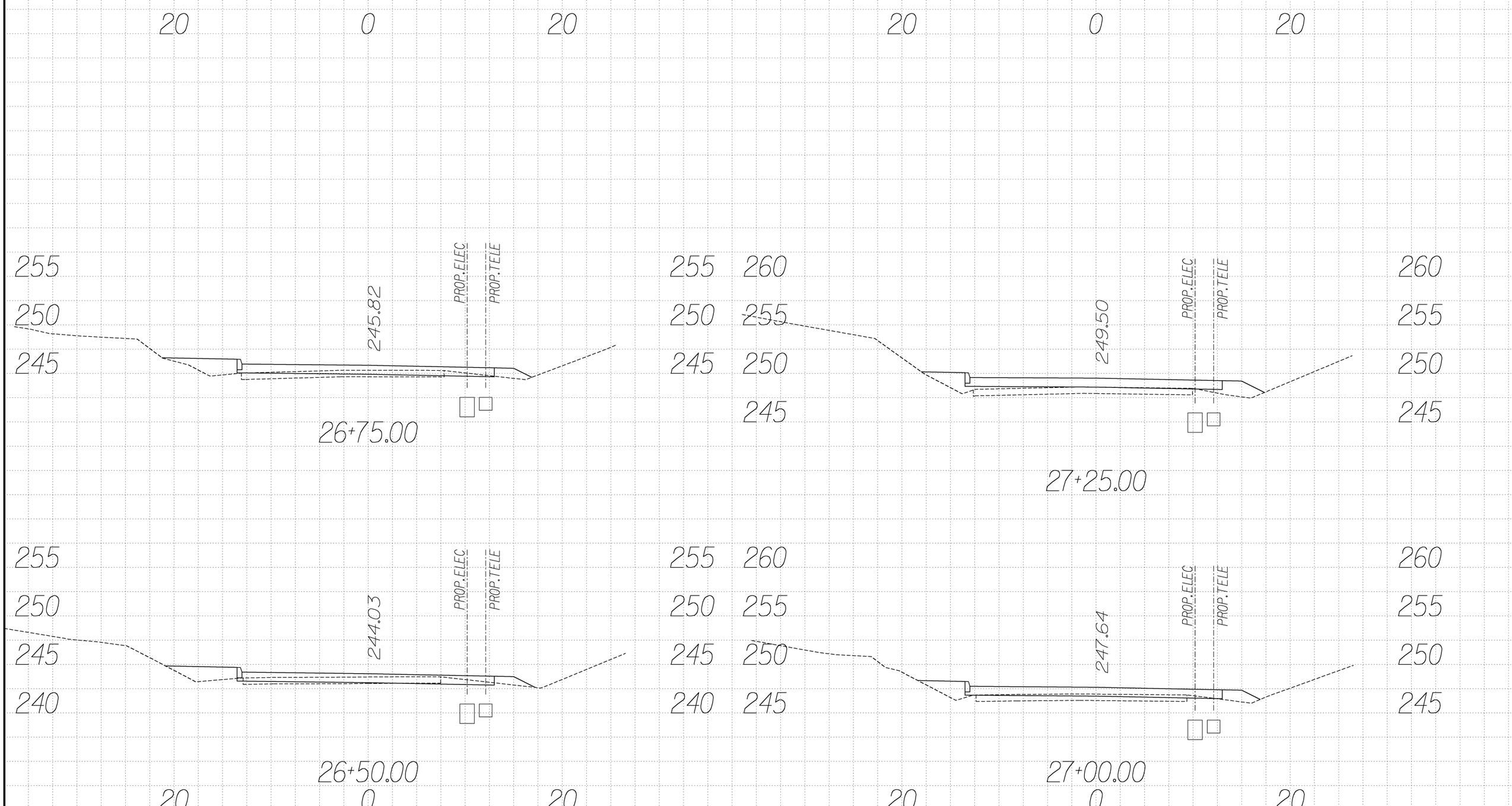

U S DEPARTMENT OF TRANSPORTATION
FEDERAL HIGHWAY ADMINISTRATION
EASTERN FEDERAL LANDS HIGHWAY DIVISION
STERLING, VIRGINIA

C&O CANAL NATIONAL HISTORIC PARK
GREAT FALL ENTRANCE ROAD & PARKING LOTS

CROSS SECTIONS
Sta. 26+50 to 27+25

0 5 10
SCALE IN FEET

NPS NO.	REG	STATE	PROJECT	SHEET NO.
412 / 41911	NCR	MD	PRA-CHOH 102 (1)	T15

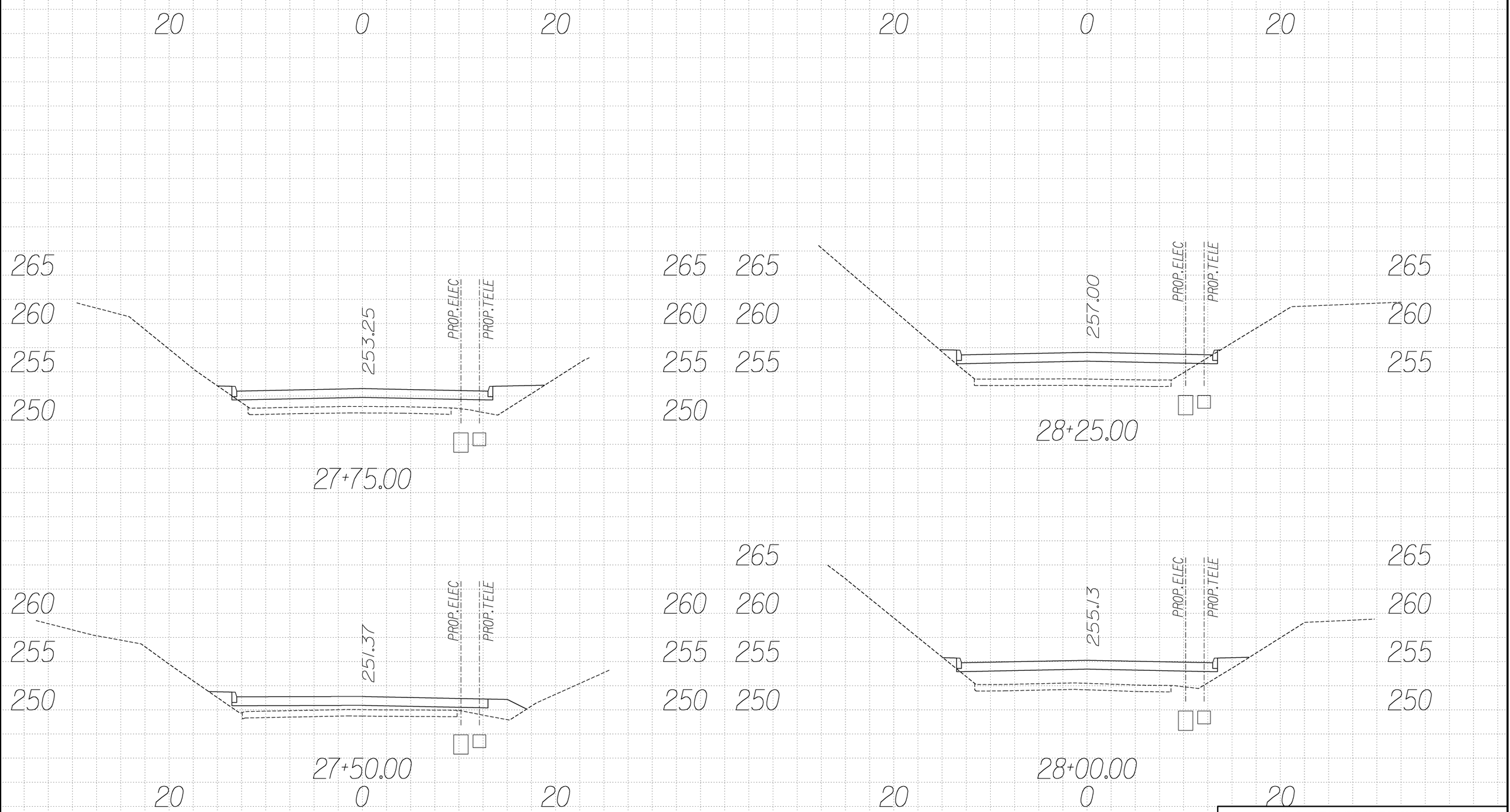

U S DEPARTMENT OF TRANSPORTATION
FEDERAL HIGHWAY ADMINISTRATION
EASTERN FEDERAL LANDS HIGHWAY DIVISION
STERLING, VIRGINIA

C&O CANAL NATIONAL HISTORIC PARK
GREAT FALL ENTRANCE ROAD & PARKING LOTS

CROSS SECTIONS
Sta. 27+50 to 28+25

0 5 10
SCALE IN FEET

NPS NO.	REG	STATE	PROJECT	SHEET NO.
412 / 41911	NCR	MD	PRA-CHOH 102 (1)	T16

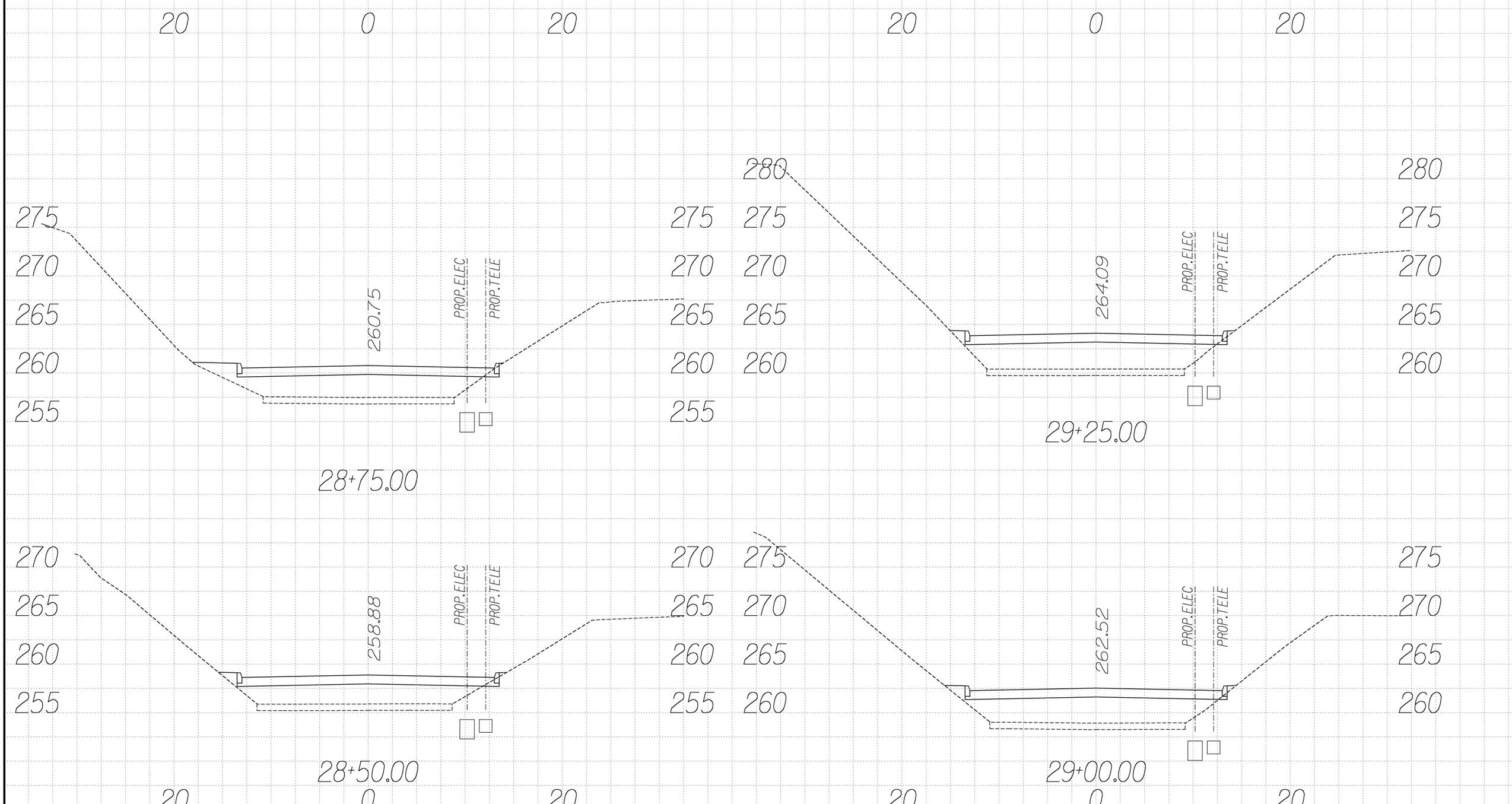

U S DEPARTMENT OF TRANSPORTATION
FEDERAL HIGHWAY ADMINISTRATION
EASTERN FEDERAL LANDS HIGHWAY DIVISION
STERLING, VIRGINIA

C&O CANAL NATIONAL HISTORIC PARK
GREAT FALL ENTRANCE ROAD & PARKING LOTS

CROSS SECTIONS
Sta. 28+50 to 29+25

0 5 10
SCALE IN FEET

NPS NO.	REG	STATE	PROJECT	SHEET NO.
412 / 41911	NCR	MD	PRA-CHOH 102 (1)	T17

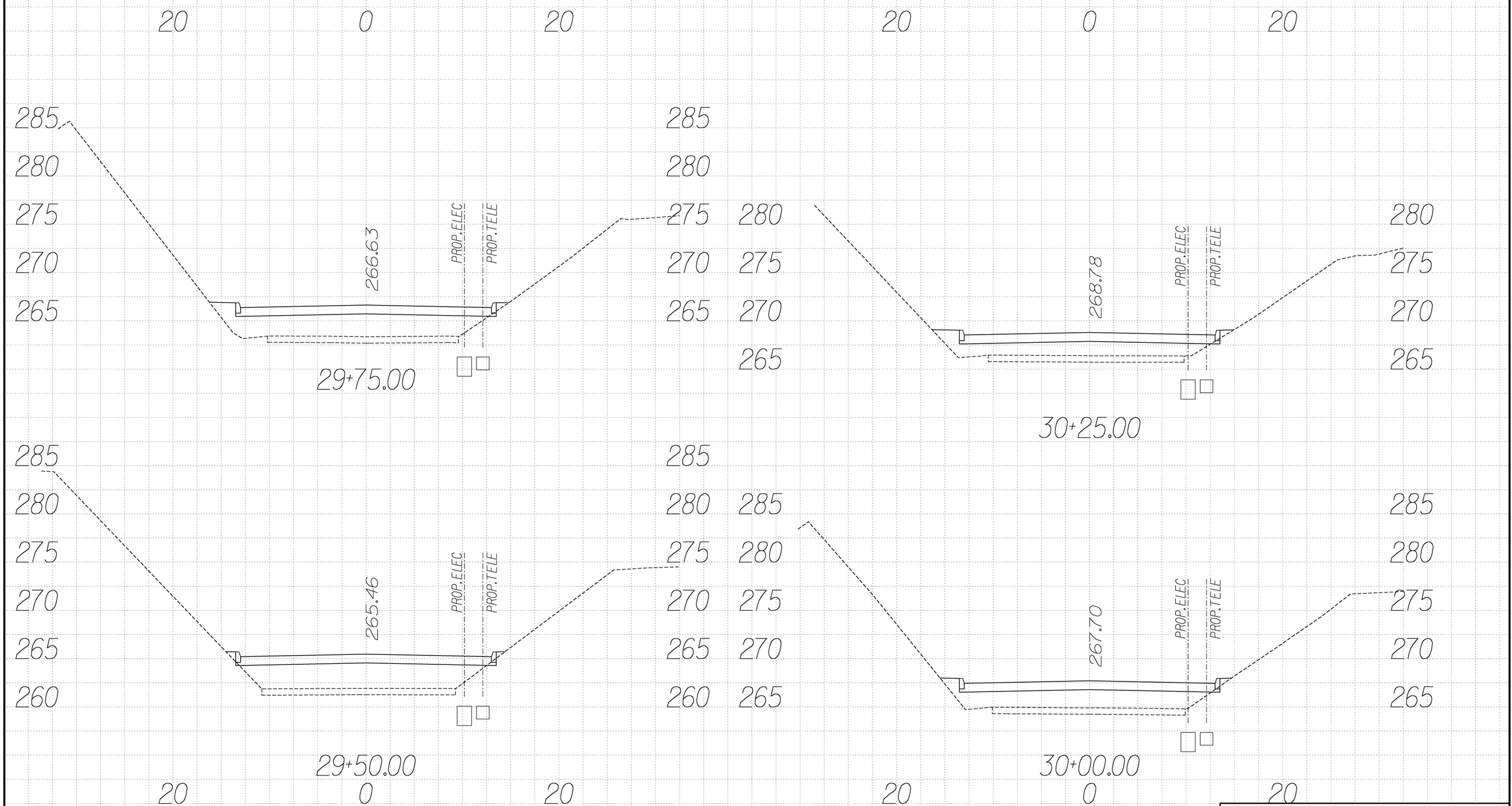

U S DEPARTMENT OF TRANSPORTATION
FEDERAL HIGHWAY ADMINISTRATION
EASTERN FEDERAL LANDS HIGHWAY DIVISION
STERLING, VIRGINIA

C&O CANAL NATIONAL HISTORIC PARK
GREAT FALL ENTRANCE ROAD & PARKING LOTS

CROSS SECTIONS

Sta. 29+50 to 30+25

0 5 10
SCALE IN FEET

NPS NO.	REG	STATE	PROJECT	SHEET NO.
412 / 41911	NCR	MD	PRA-CHOH 102 (1)	T18

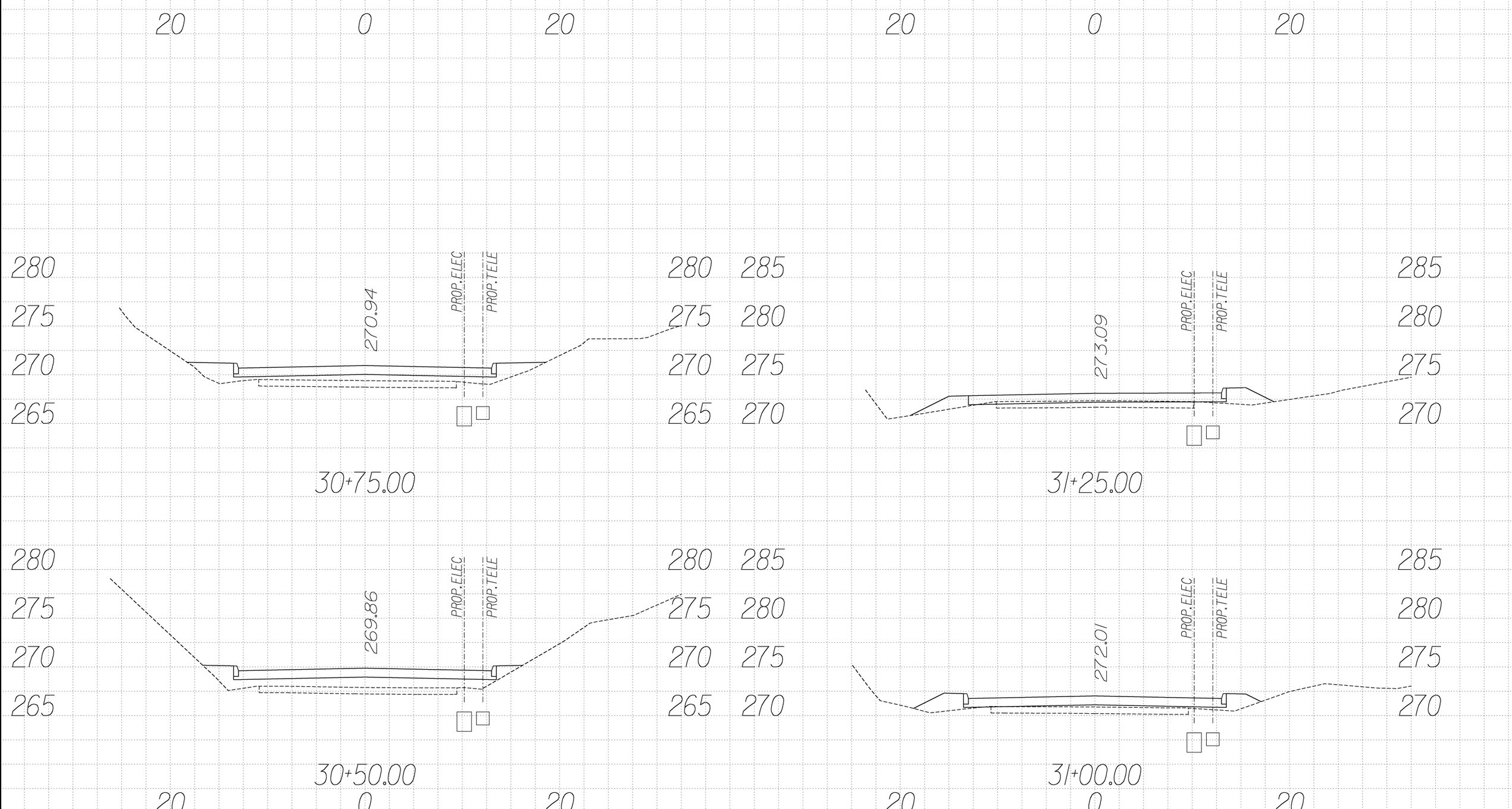

U S DEPARTMENT OF TRANSPORTATION
FEDERAL HIGHWAY ADMINISTRATION
EASTERN FEDERAL LANDS HIGHWAY DIVISION
STERLING, VIRGINIA

C&O CANAL NATIONAL HISTORIC PARK
GREAT FALL ENTRANCE ROAD & PARKING LOTS

CROSS SECTIONS
Sta. 30+50 to 31+25

0 5 10
SCALE IN FEET

NPS NO.	REG	STATE	PROJECT	SHEET NO.
412 / 41911	NCR	MD	PRA-CHOH 102 (1)	T19

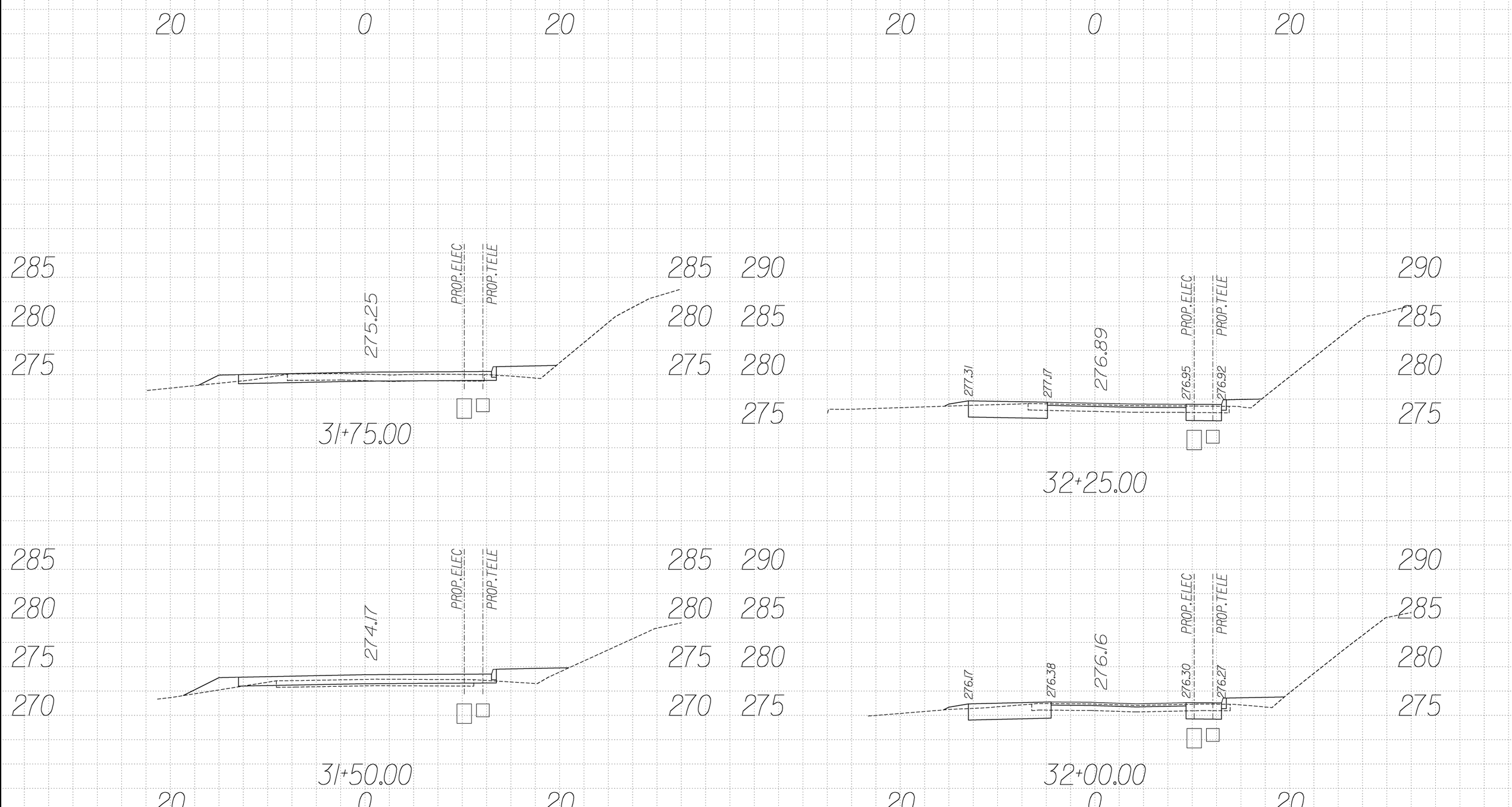

U S DEPARTMENT OF TRANSPORTATION
FEDERAL HIGHWAY ADMINISTRATION
EASTERN FEDERAL LANDS HIGHWAY DIVISION
STERLING, VIRGINIA

C&O CANAL NATIONAL HISTORIC PARK
GREAT FALL ENTRANCE ROAD & PARKING LOTS

CROSS SECTIONS
Sta. 31+50 to 32+25

0 5 10
SCALE IN FEET

NPS NO.	REG	STATE	PROJECT	SHEET NO.
412 / 41911	NCR	MD	PRA-CHOH 102 (1)	T20

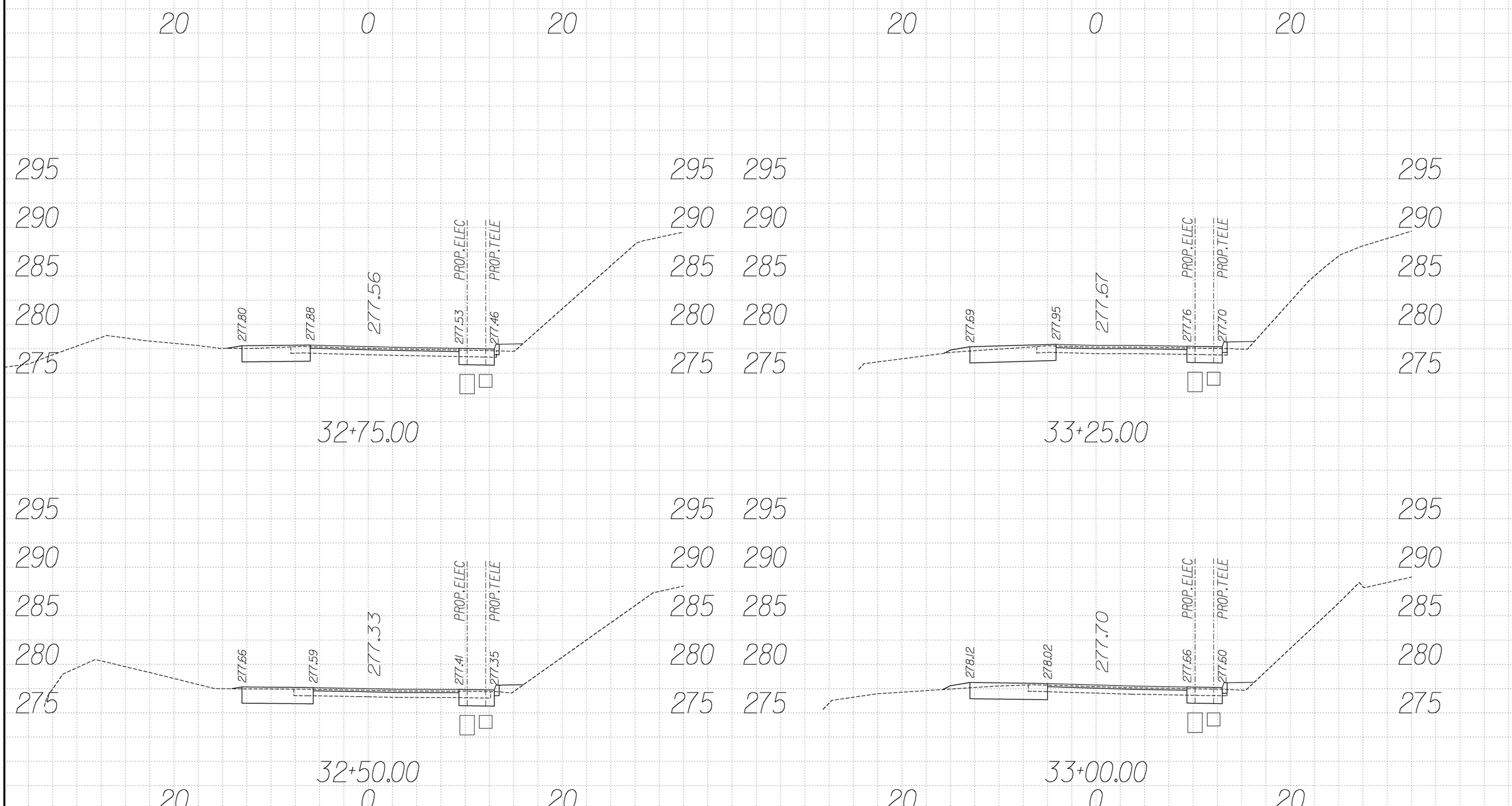

U S DEPARTMENT OF TRANSPORTATION
FEDERAL HIGHWAY ADMINISTRATION
EASTERN FEDERAL LANDS HIGHWAY DIVISION
STERLING, VIRGINIA

C&O CANAL NATIONAL HISTORIC PARK
GREAT FALL ENTRANCE ROAD & PARKING LOTS

CROSS SECTIONS
Sta. 32+50 to 33+25

0 5 10
SCALE IN FEET

NPS NO.	REG	STATE	PROJECT	SHEET NO.
412 / 41911	NCR	MD	PRA-CHOH 102 (1)	T21

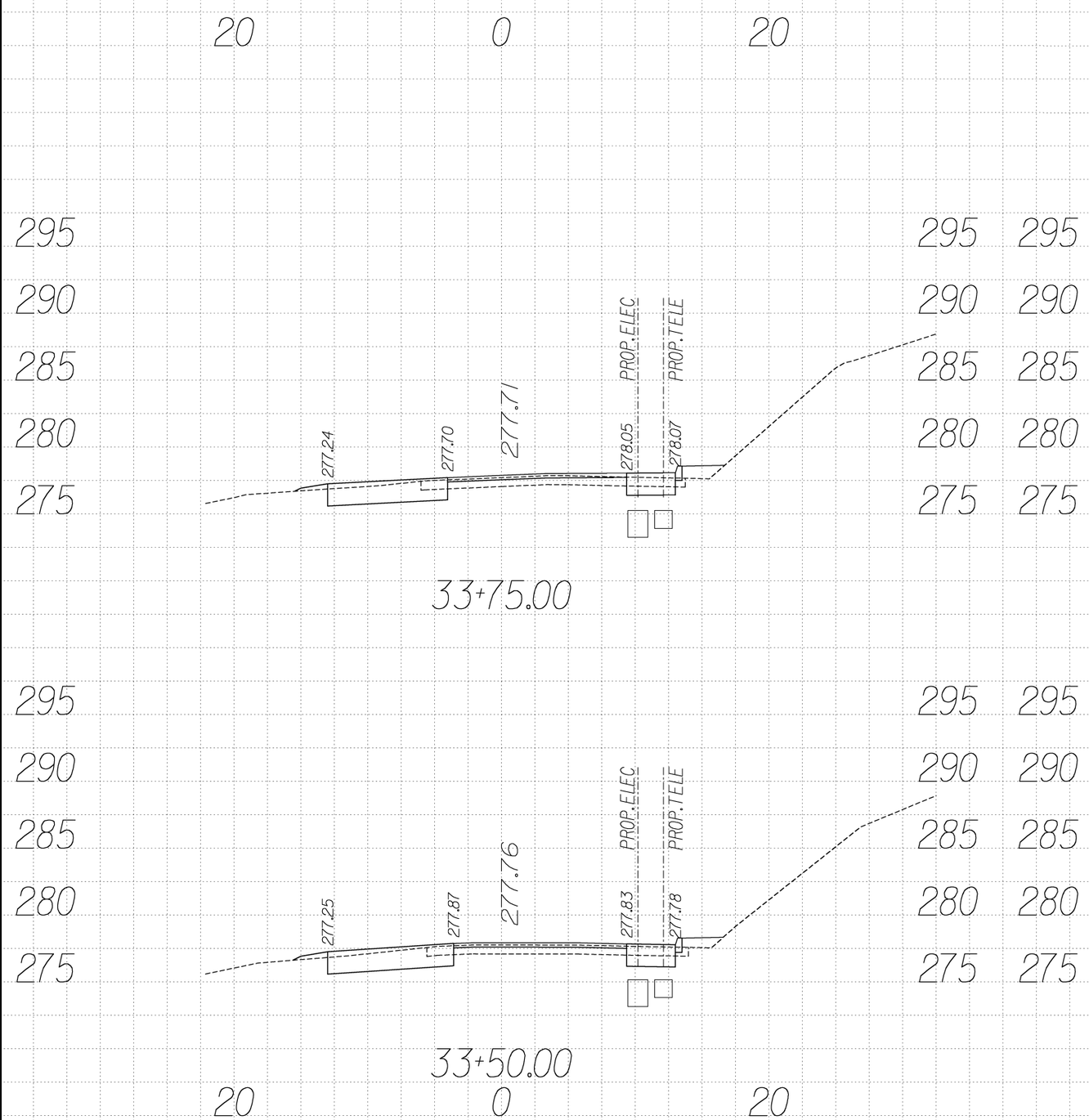

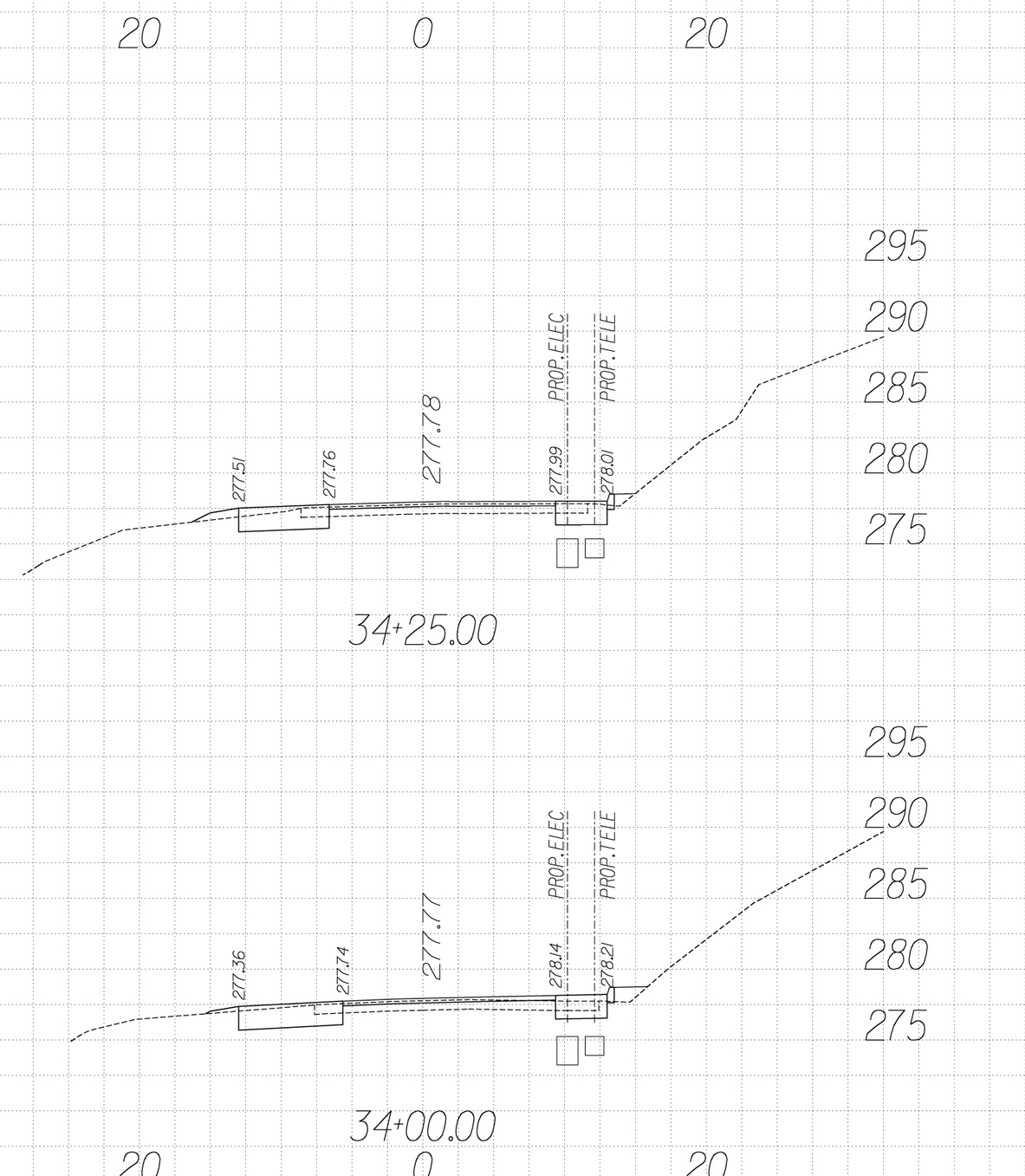

U S DEPARTMENT OF TRANSPORTATION
FEDERAL HIGHWAY ADMINISTRATION
EASTERN FEDERAL LANDS HIGHWAY DIVISION
STERLING, VIRGINIA

C&O CANAL NATIONAL HISTORIC PARK
GREAT FALL ENTRANCE ROAD & PARKING LOTS

CROSS SECTIONS
Sta. 33+50 to 34+25

0 5 10
SCALE IN FEET

NPS NO.	REG	STATE	PROJECT	SHEET NO.
412 / 41911	NCR	MD	PRA-CHOH 102 (1)	T22

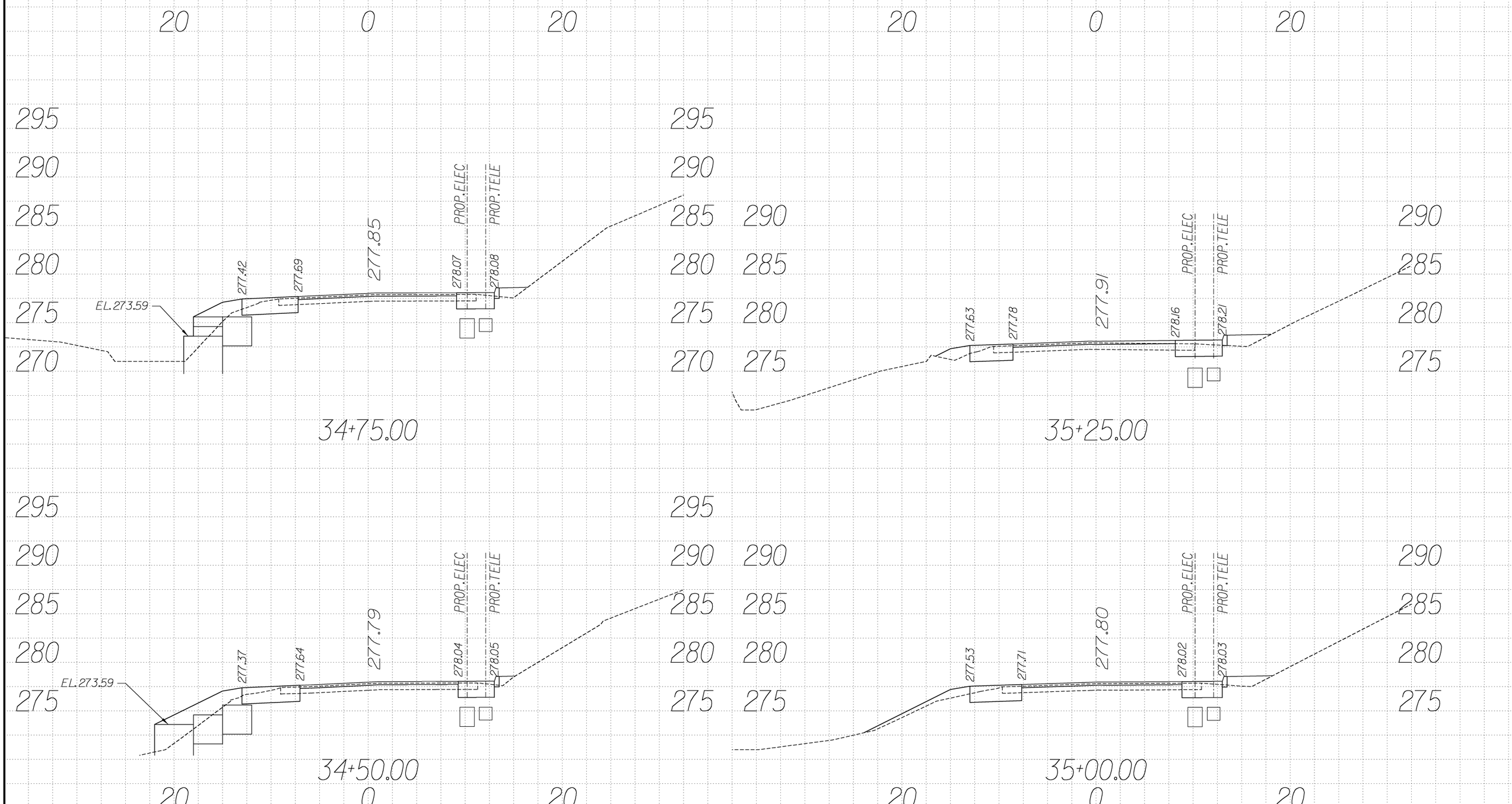

U S DEPARTMENT OF TRANSPORTATION
FEDERAL HIGHWAY ADMINISTRATION
EASTERN FEDERAL LANDS HIGHWAY DIVISION
STERLING, VIRGINIA

C&O CANAL NATIONAL HISTORIC PARK
GREAT FALL ENTRANCE ROAD & PARKING LOTS

CROSS SECTIONS
Sta. 34+50 to 35+25

0 5 10
SCALE IN FEET

NPS NO.	REG	STATE	PROJECT	SHEET NO.
412 / 41911	NCR	MD	PRA-CHOH 102 (1)	T23

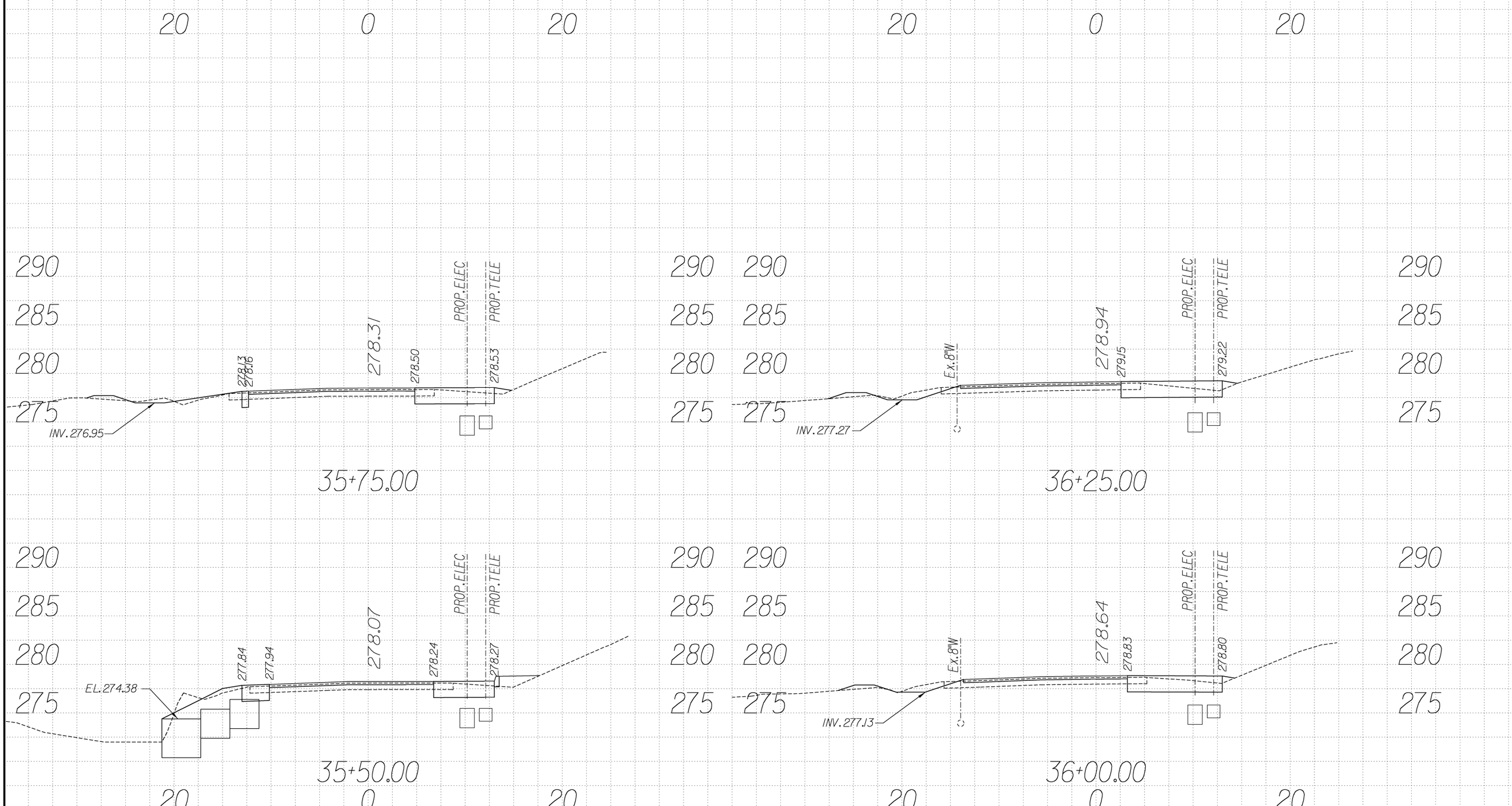

U S DEPARTMENT OF TRANSPORTATION
FEDERAL HIGHWAY ADMINISTRATION
EASTERN FEDERAL LANDS HIGHWAY DIVISION
STERLING, VIRGINIA

C&O CANAL NATIONAL HISTORIC PARK
GREAT FALL ENTRANCE ROAD & PARKING LOTS

CROSS SECTIONS
Sta. 35+50 to 36+25

0 5 10
SCALE IN FEET

NPS NO.	REG	STATE	PROJECT	SHEET NO.
412 / 41911	NCR	MD	PRA-CHOH 102 (1)	T24

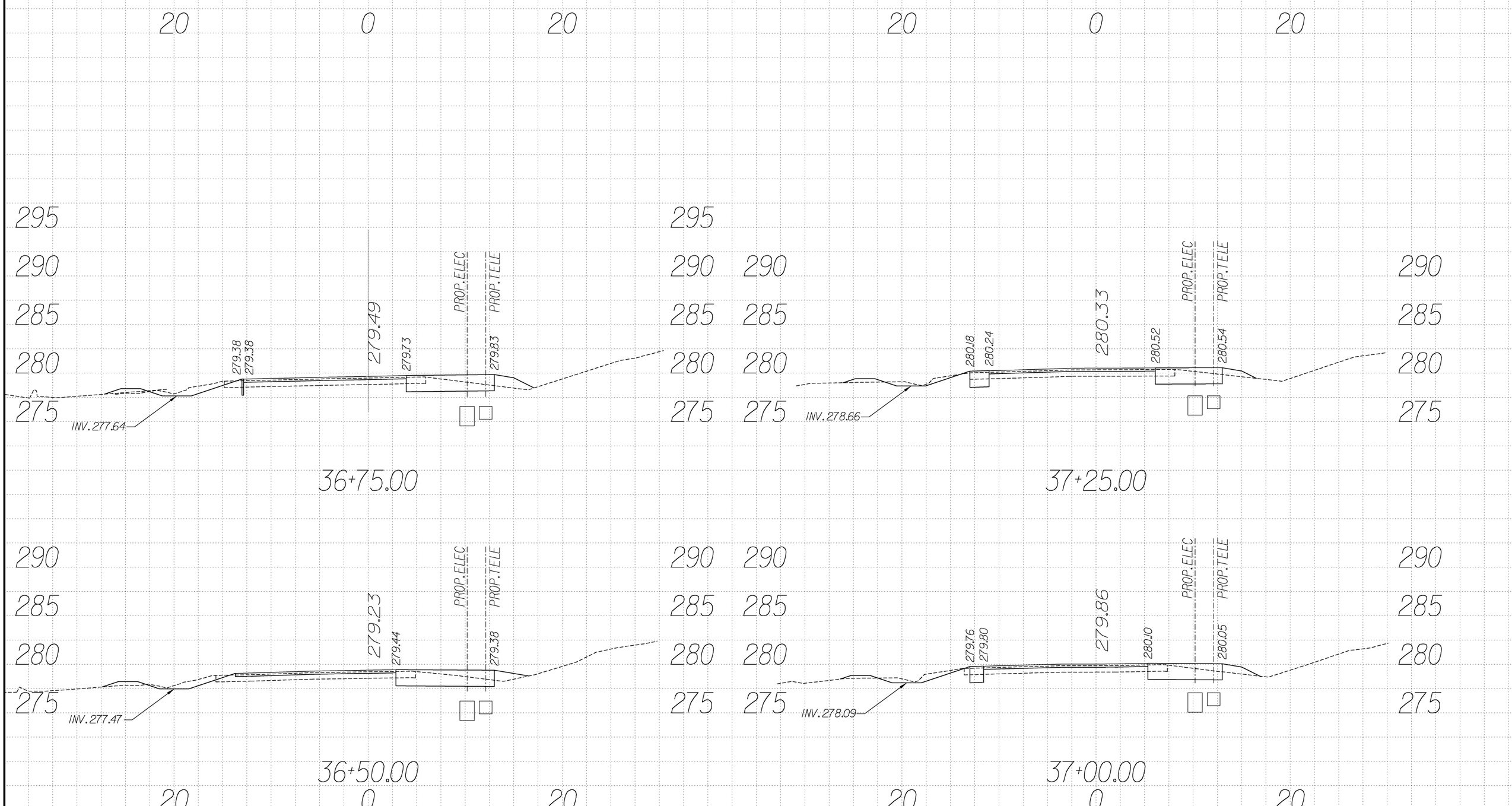

U S DEPARTMENT OF TRANSPORTATION
FEDERAL HIGHWAY ADMINISTRATION
EASTERN FEDERAL LANDS HIGHWAY DIVISION
STERLING, VIRGINIA

C&O CANAL NATIONAL HISTORIC PARK
GREAT FALL ENTRANCE ROAD & PARKING LOTS

CROSS SECTIONS
Sta. 36+50 to 37+25

0 5 10
SCALE IN FEET

NPS NO.	REG	STATE	PROJECT	SHEET NO.
412 / 41911	NCR	MD	PRA-CHOH 102 (1)	T25

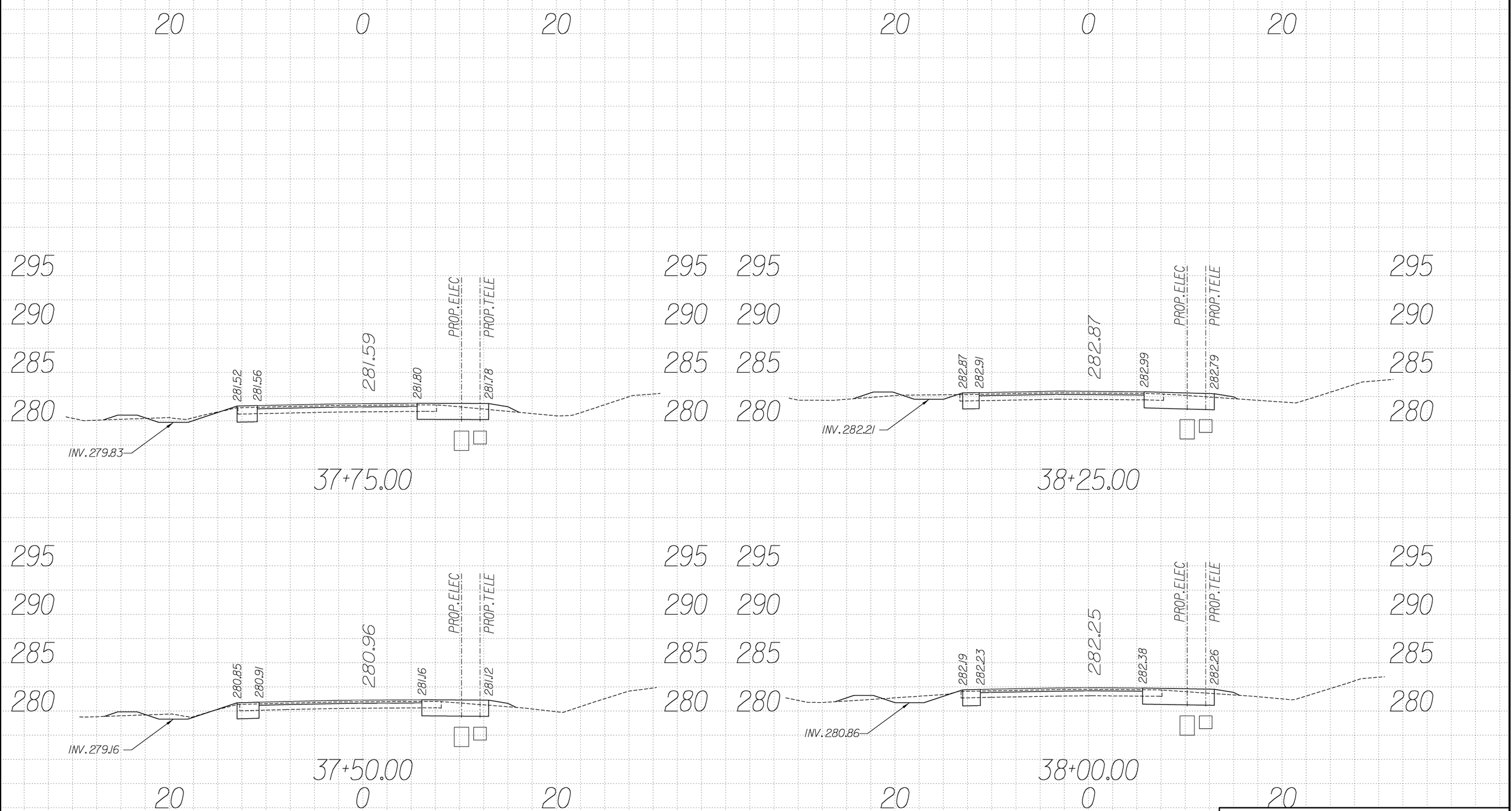

U S DEPARTMENT OF TRANSPORTATION
FEDERAL HIGHWAY ADMINISTRATION
EASTERN FEDERAL LANDS HIGHWAY DIVISION
STERLING, VIRGINIA

C&O CANAL NATIONAL HISTORIC PARK
GREAT FALL ENTRANCE ROAD & PARKING LOTS

CROSS SECTIONS

Sta. 37+50 to 38+25

0 5 10
SCALE IN FEET

NPS NO.	REG	STATE	PROJECT	SHEET NO.
412 / 41911	NCR	MD	PRA-CHOH 102 (1)	T26

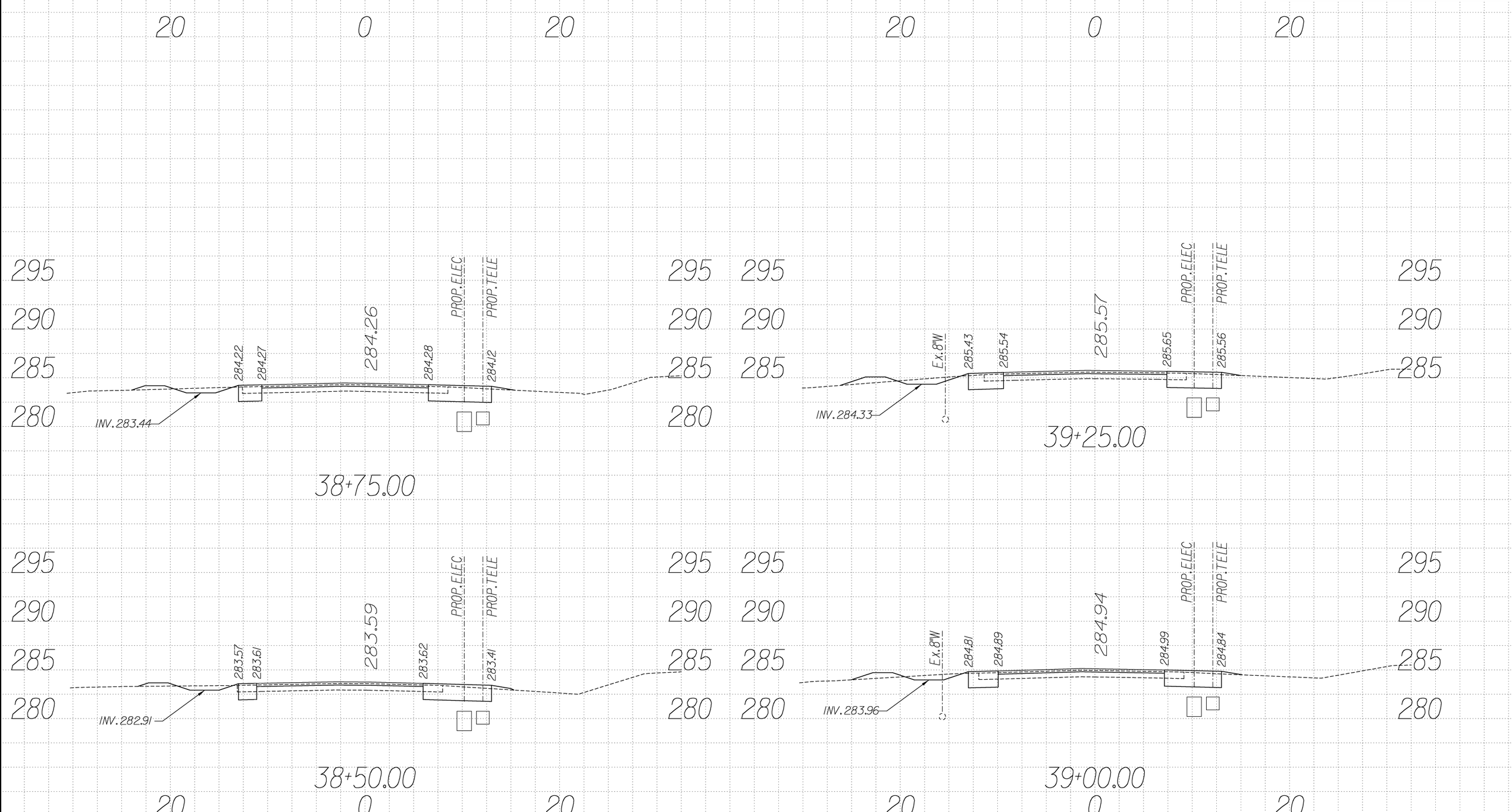

U S DEPARTMENT OF TRANSPORTATION
FEDERAL HIGHWAY ADMINISTRATION
EASTERN FEDERAL LANDS HIGHWAY DIVISION
STERLING, VIRGINIA

C&O CANAL NATIONAL HISTORIC PARK
GREAT FALL ENTRANCE ROAD & PARKING LOTS

CROSS SECTIONS
Sta. 38+50 to 39+25

0 5 10
SCALE IN FEET

NPS NO.	REG	STATE	PROJECT	SHEET NO.
412 / 41911	NCR	MD	PRA-CHOH 102 (1)	T27

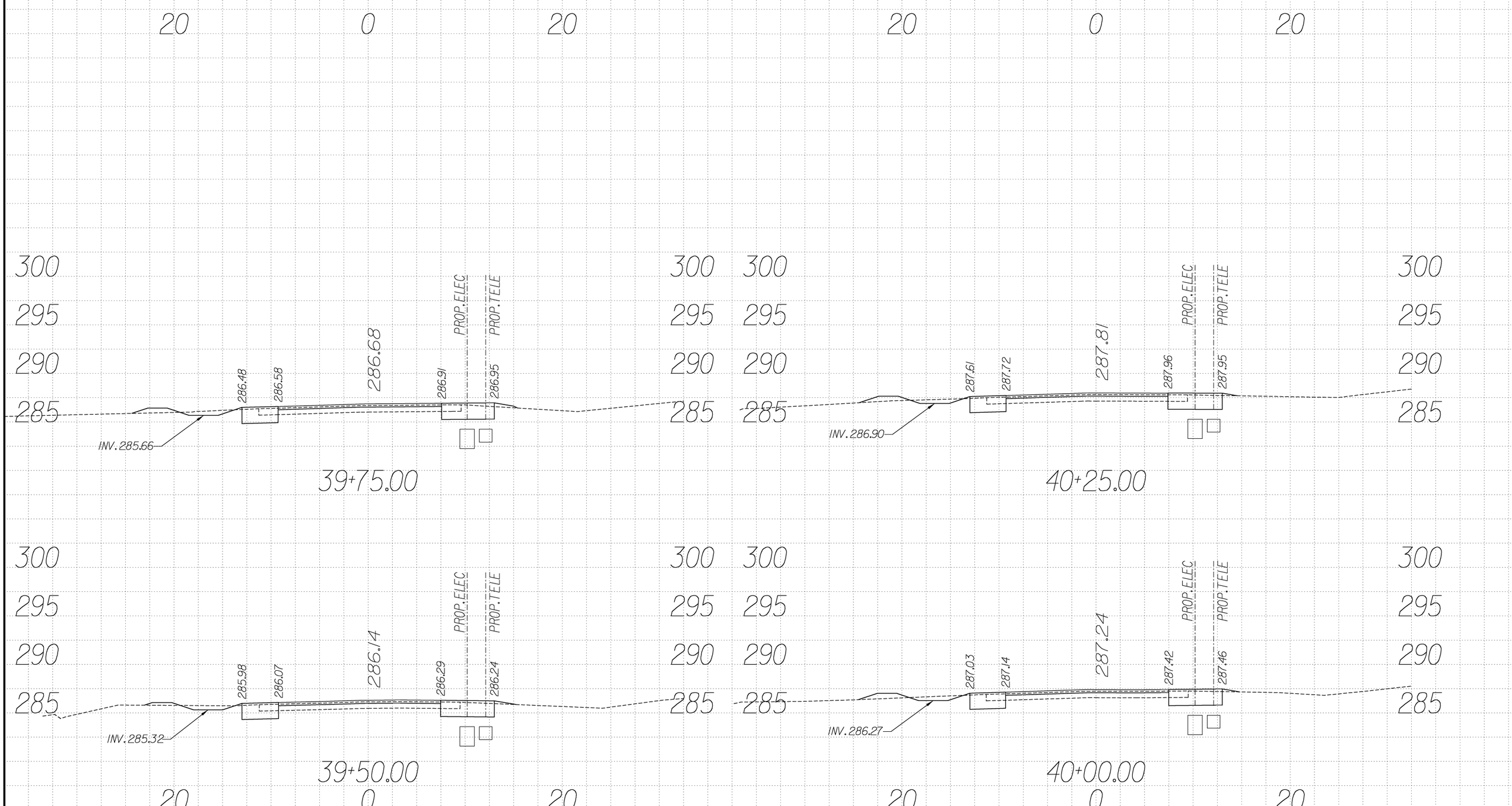

U S DEPARTMENT OF TRANSPORTATION
FEDERAL HIGHWAY ADMINISTRATION
EASTERN FEDERAL LANDS HIGHWAY DIVISION
STERLING, VIRGINIA

C&O CANAL NATIONAL HISTORIC PARK
GREAT FALL ENTRANCE ROAD & PARKING LOTS

CROSS SECTIONS
Sta. 39+50 to 40+25

0 5 10
SCALE IN FEET

NPS NO.	REG	STATE	PROJECT	SHEET NO.
412 / 41911	NCR	MD	PRA-CHOH 102 (1)	T28

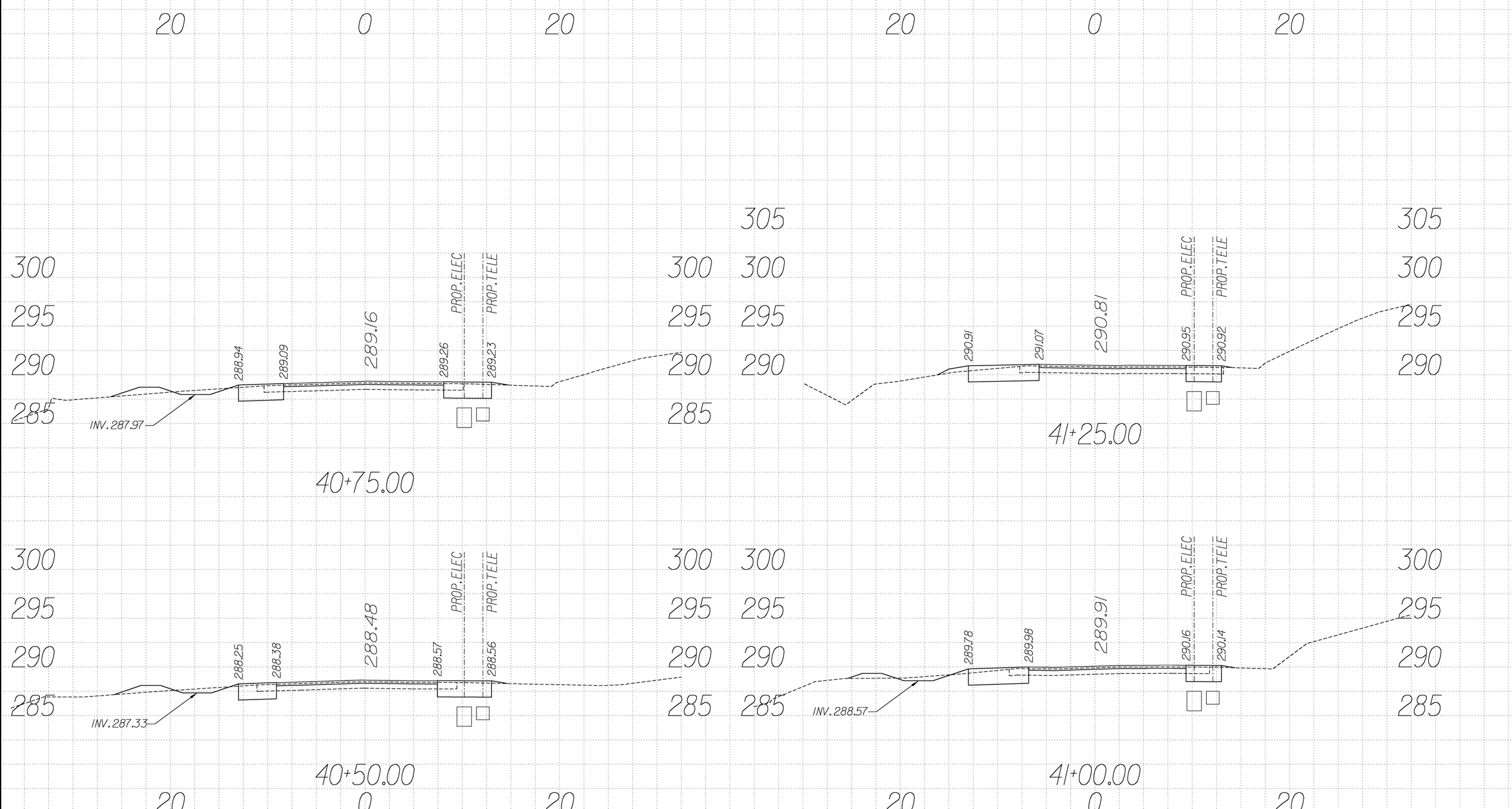

U S DEPARTMENT OF TRANSPORTATION
FEDERAL HIGHWAY ADMINISTRATION
EASTERN FEDERAL LANDS HIGHWAY DIVISION
STERLING, VIRGINIA

C&O CANAL NATIONAL HISTORIC PARK
GREAT FALL ENTRANCE ROAD & PARKING LOTS

CROSS SECTIONS
Sta. 40+50 to 41+25

0 5 10
SCALE IN FEET

NPS NO.	REG	STATE	PROJECT	SHEET NO.
412 / 41911	NCR	MD	PRA-CHOH 102 (1)	T29

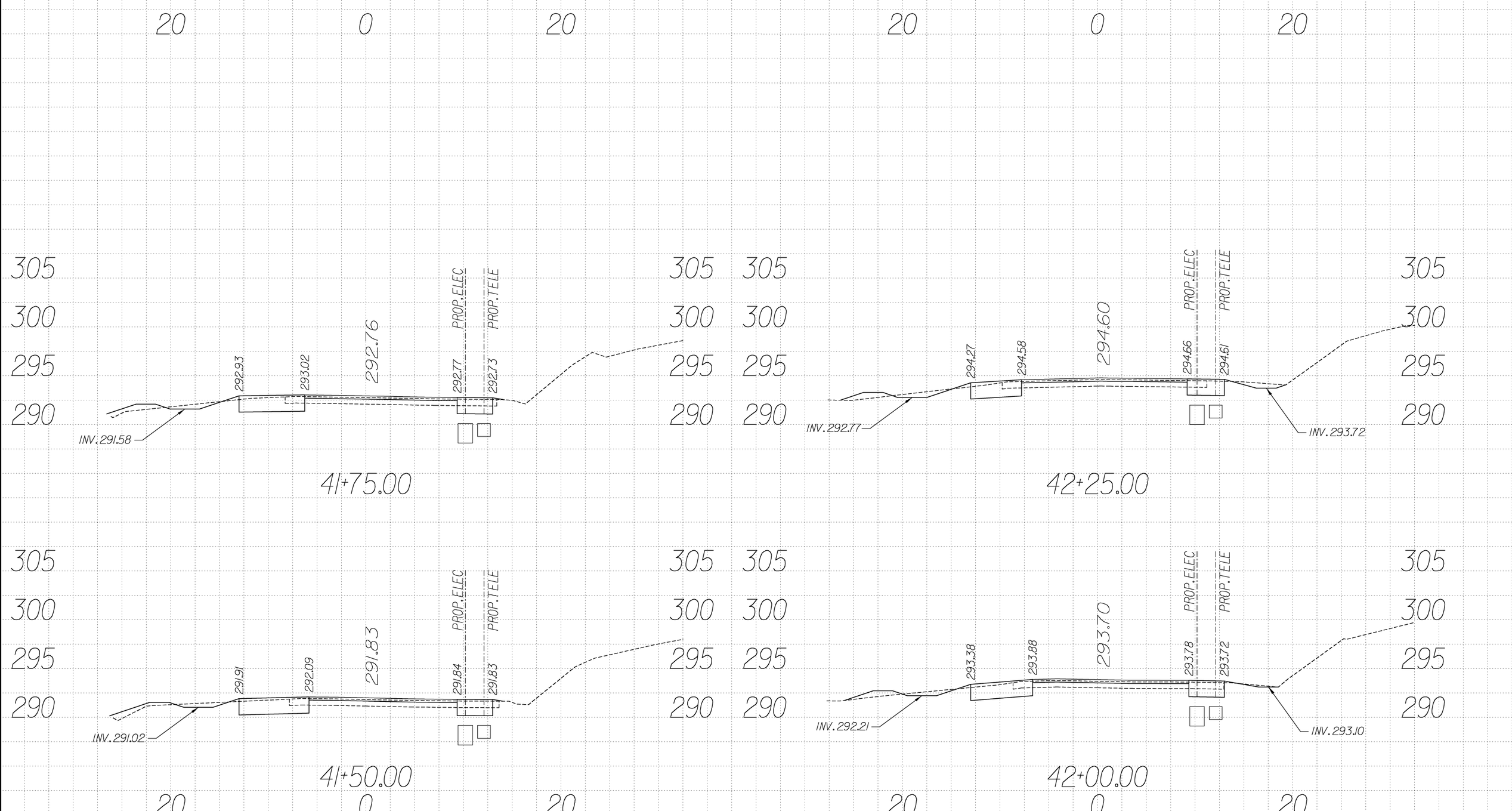

U S DEPARTMENT OF TRANSPORTATION
FEDERAL HIGHWAY ADMINISTRATION
EASTERN FEDERAL LANDS HIGHWAY DIVISION
STERLING, VIRGINIA

C&O CANAL NATIONAL HISTORIC PARK
GREAT FALL ENTRANCE ROAD & PARKING LOTS

CROSS SECTIONS
Sta. 41+50 to 42+25

0 5 10
SCALE IN FEET

NPS NO.	REG	STATE	PROJECT	SHEET NO.
412 / 41911	NCR	MD	PRA-CHOH 102 (1)	T30

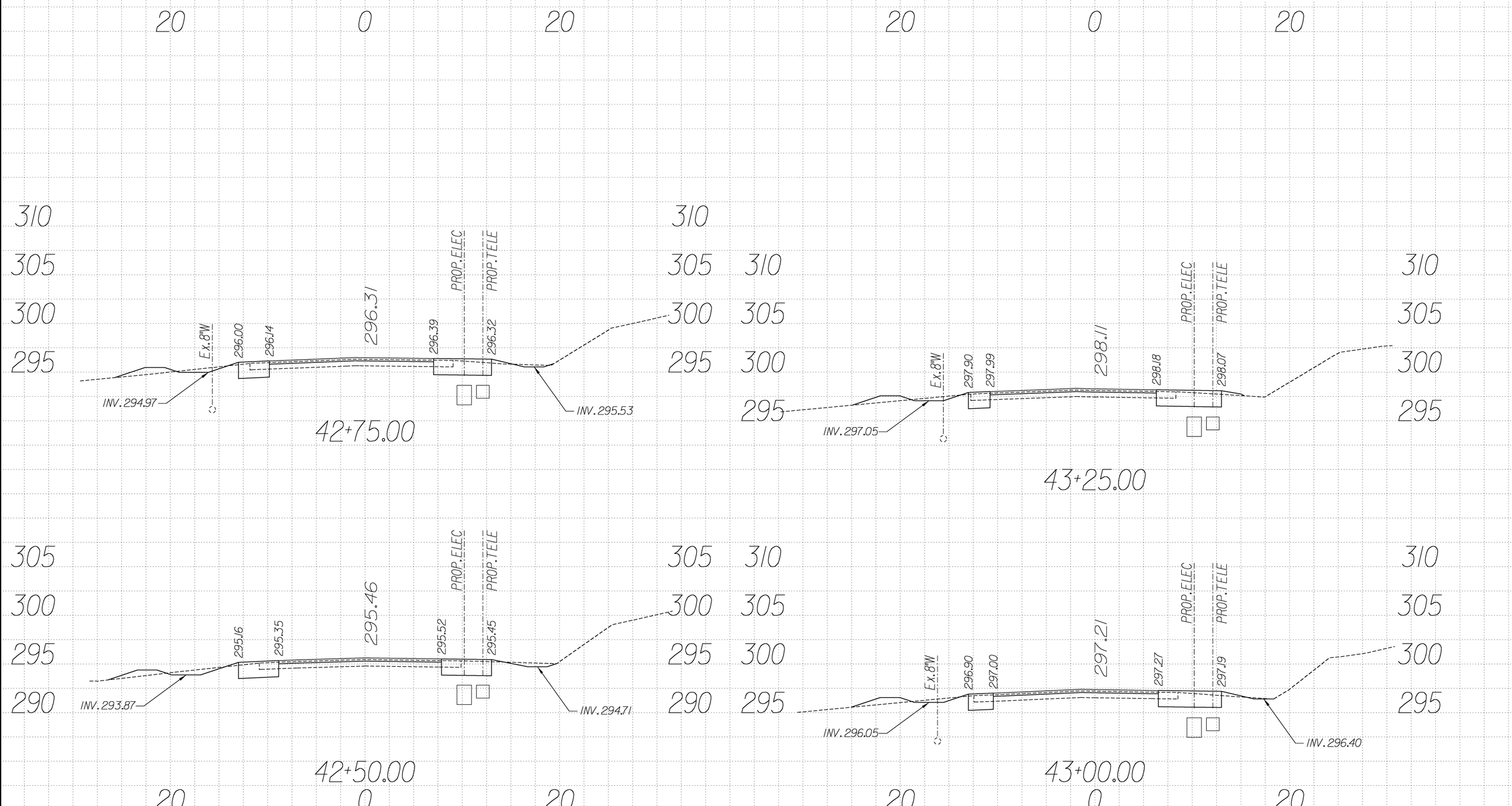

U S DEPARTMENT OF TRANSPORTATION
FEDERAL HIGHWAY ADMINISTRATION
EASTERN FEDERAL LANDS HIGHWAY DIVISION
STERLING, VIRGINIA

C&O CANAL NATIONAL HISTORIC PARK
GREAT FALL ENTRANCE ROAD & PARKING LOTS

CROSS SECTIONS
Sta. 42+50 to 43+25

0 5 10
SCALE IN FEET

NPS NO.	REG	STATE	PROJECT	SHEET NO.
412 / 41911	NCR	MD	PRA-CHOH 102 (1)	T31

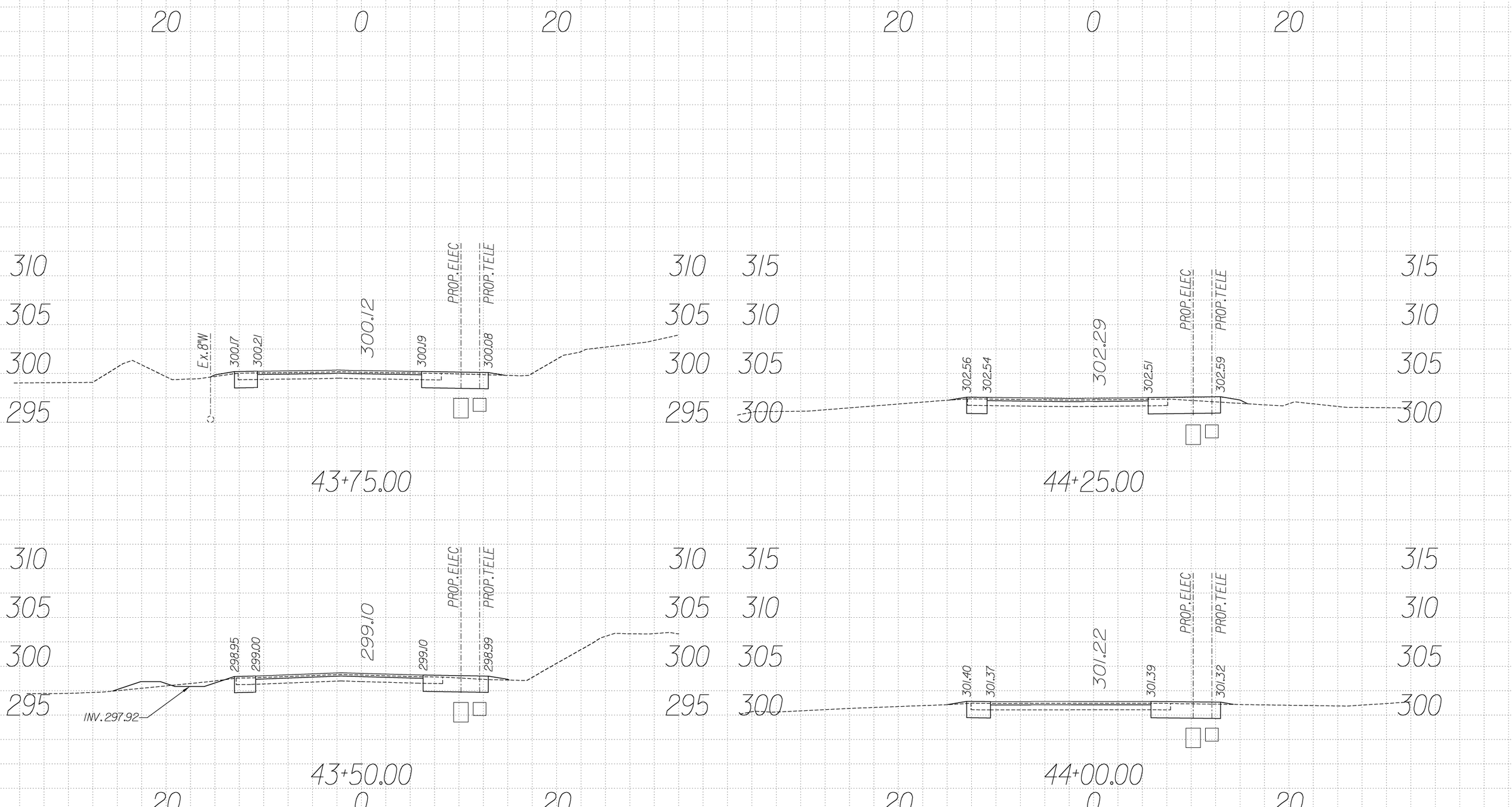

U S DEPARTMENT OF TRANSPORTATION
FEDERAL HIGHWAY ADMINISTRATION
EASTERN FEDERAL LANDS HIGHWAY DIVISION
STERLING, VIRGINIA

C&O CANAL NATIONAL HISTORIC PARK
GREAT FALL ENTRANCE ROAD & PARKING LOTS

CROSS SECTIONS
Sta. 43+50 to 44+25

0 5 10
SCALE IN FEET

NPS NO.	REG	STATE	PROJECT	SHEET NO.
412 / 41911	NCR	MD	PRA-CHOH 102 (1)	T32

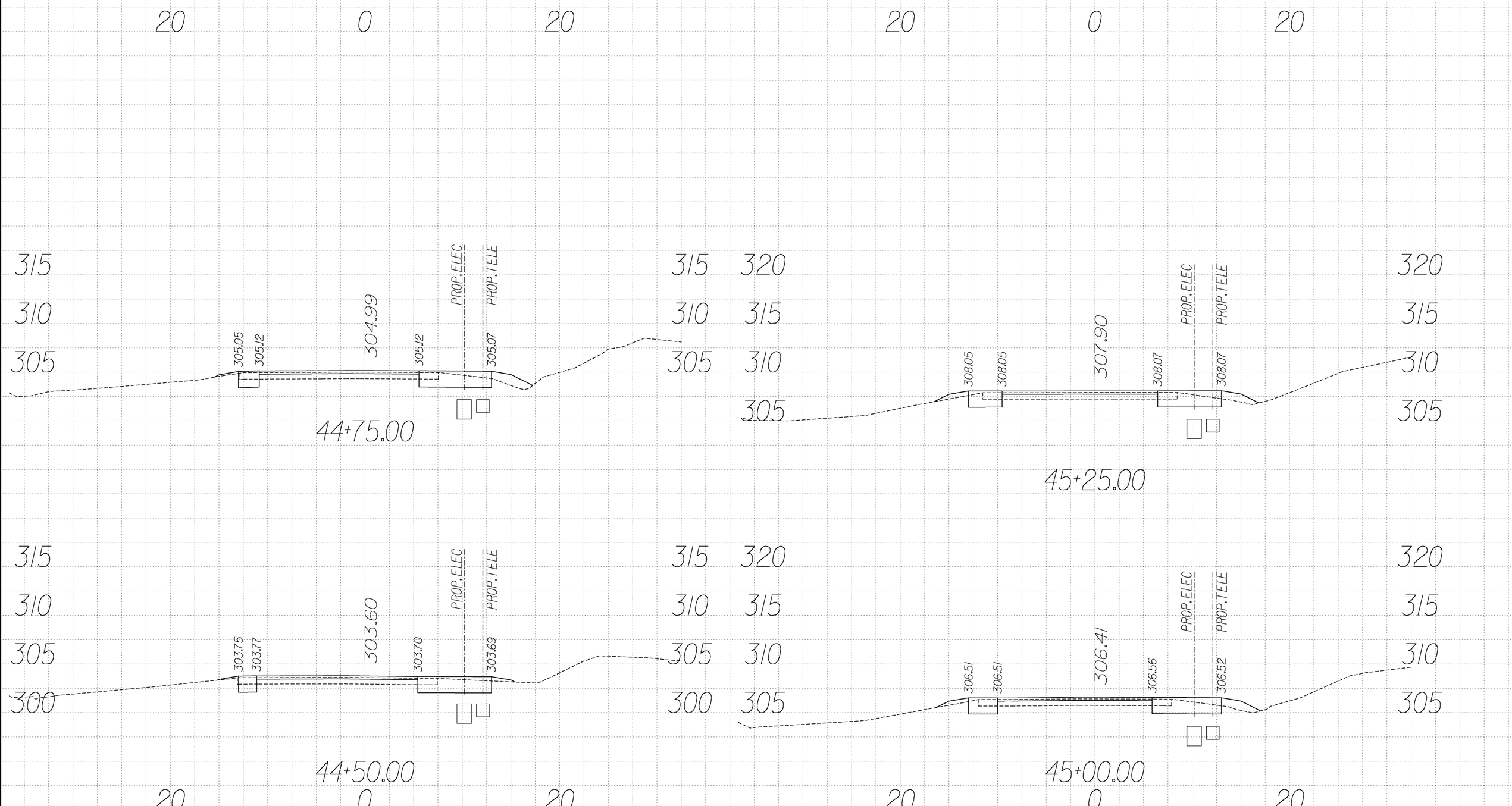

U S DEPARTMENT OF TRANSPORTATION
FEDERAL HIGHWAY ADMINISTRATION
EASTERN FEDERAL LANDS HIGHWAY DIVISION
STERLING, VIRGINIA

C&O CANAL NATIONAL HISTORIC PARK
GREAT FALL ENTRANCE ROAD & PARKING LOTS

CROSS SECTIONS
Sta. 44+50 to 45+25

0 5 10
SCALE IN FEET

NPS NO.	REG	STATE	PROJECT	SHEET NO.
412 / 41911	NCR	MD	PRA-CHOH 102 (1)	T33

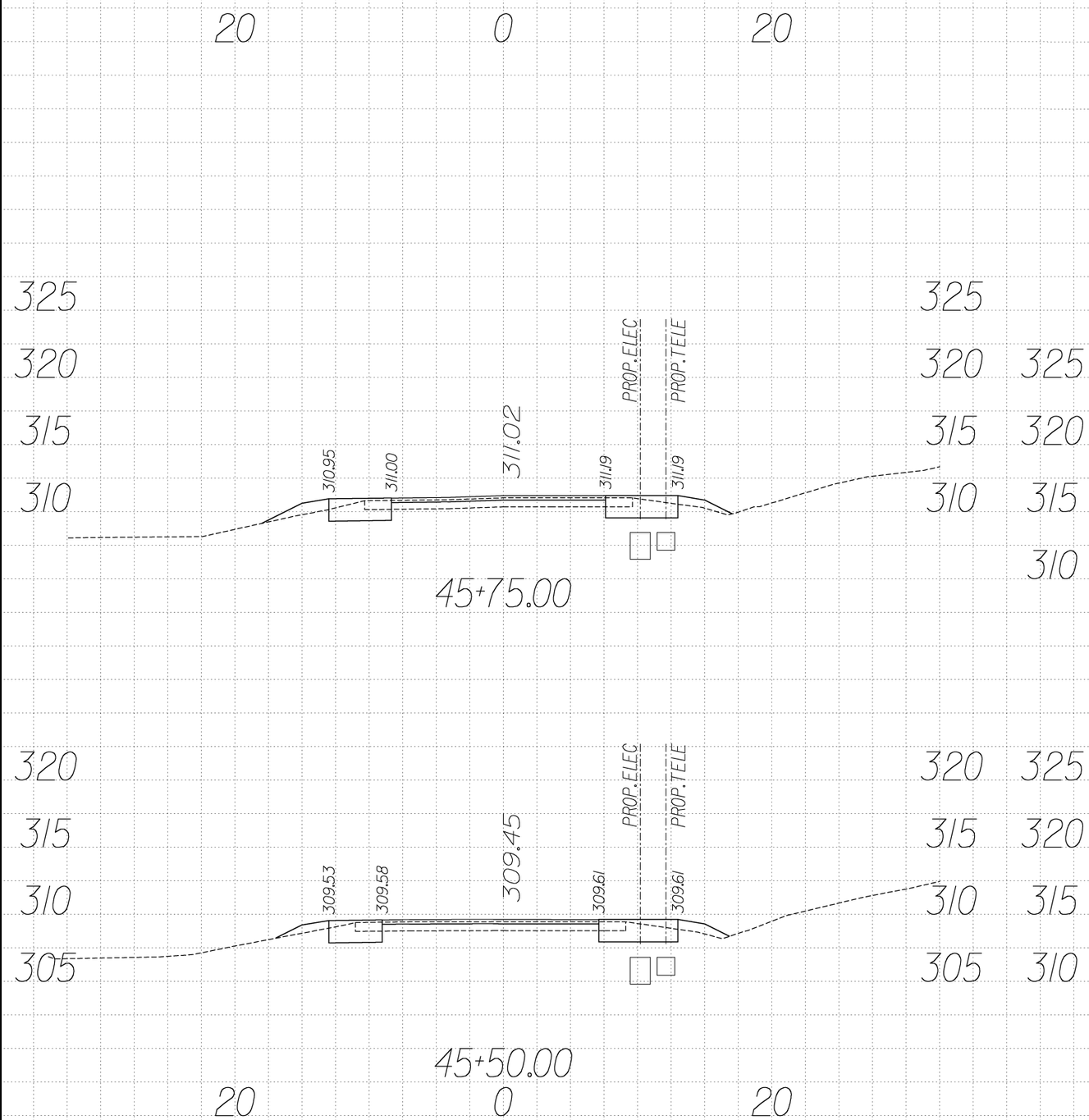

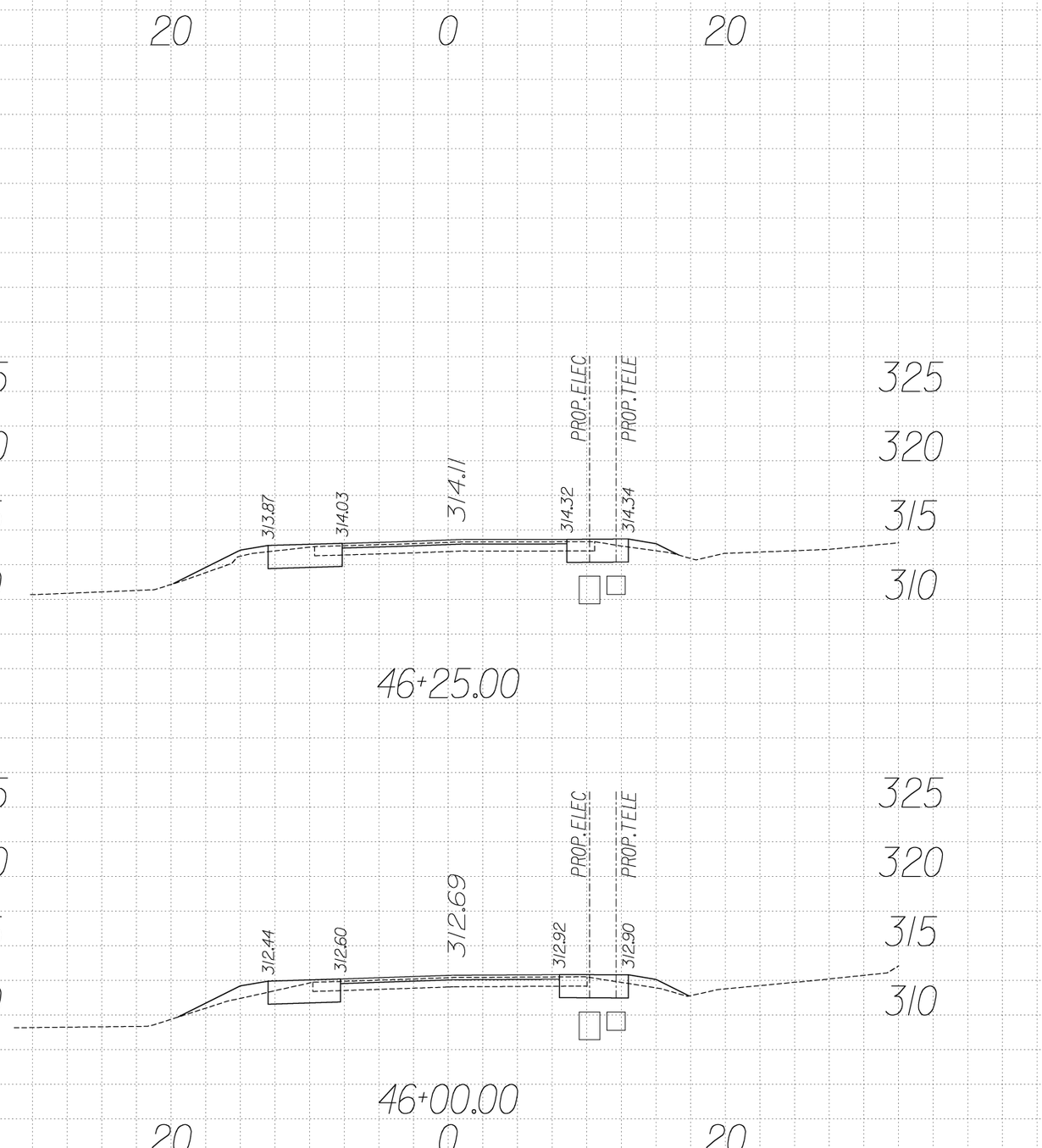

U S DEPARTMENT OF TRANSPORTATION
FEDERAL HIGHWAY ADMINISTRATION
EASTERN FEDERAL LANDS HIGHWAY DIVISION
STERLING, VIRGINIA

C&O CANAL NATIONAL HISTORIC PARK
GREAT FALL ENTRANCE ROAD & PARKING LOTS

CROSS SECTIONS
Sta. 45+50 to 46+25

0 5 10
SCALE IN FEET

NPS NO.	REG	STATE	PROJECT	SHEET NO.
412 / 41911	NCR	MD	PRA-CHOH 102 (1)	T34

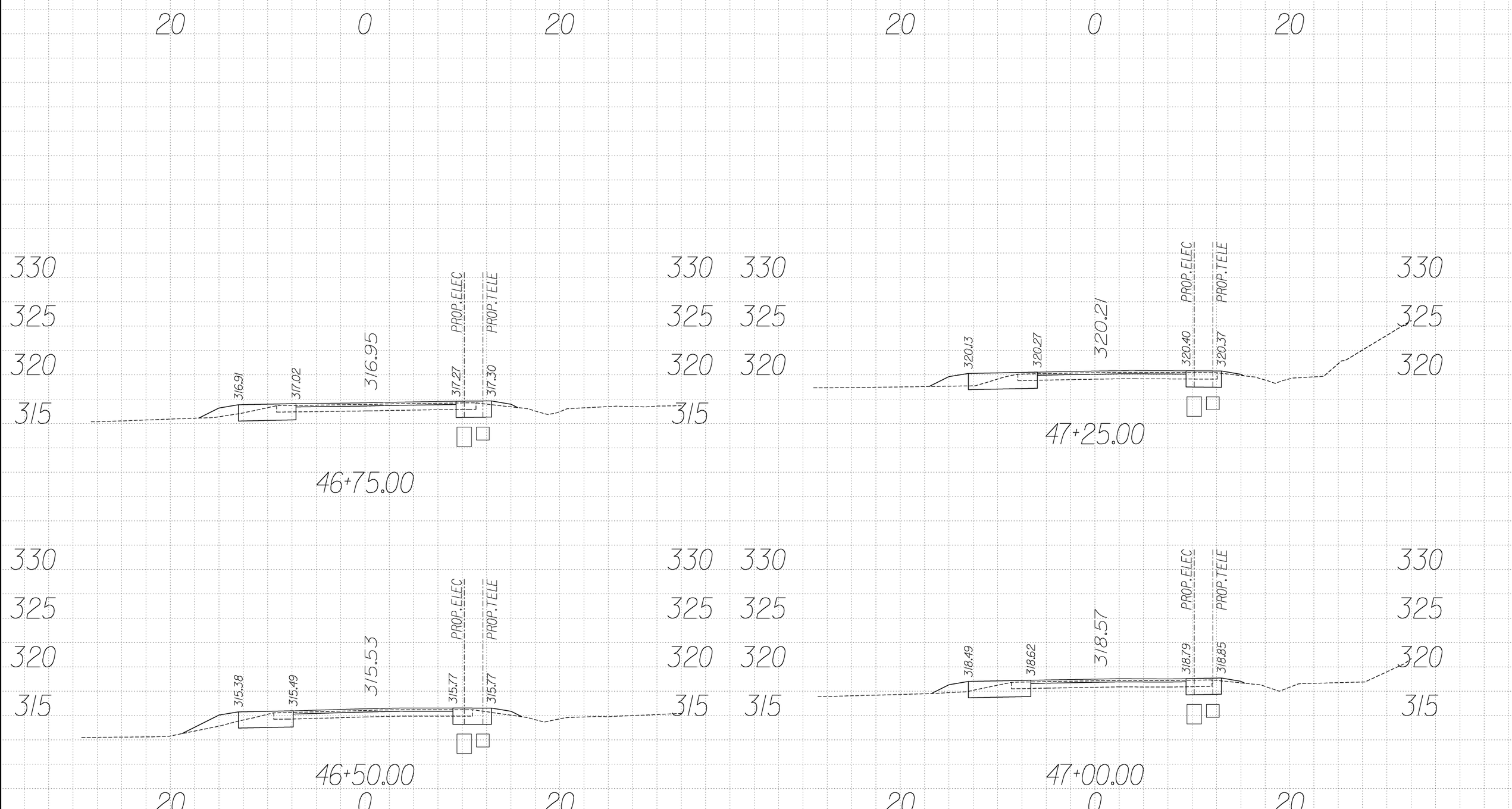

U S DEPARTMENT OF TRANSPORTATION
FEDERAL HIGHWAY ADMINISTRATION
EASTERN FEDERAL LANDS HIGHWAY DIVISION
STERLING, VIRGINIA

C&O CANAL NATIONAL HISTORIC PARK
GREAT FALL ENTRANCE ROAD & PARKING LOTS

CROSS SECTIONS
Sta. 46+50 to 47+25

0 5 10
SCALE IN FEET

NPS NO.	REG	STATE	PROJECT	SHEET NO.
412 / 41911	NCR	MD	PRA-CHOH 102 (1)	T35

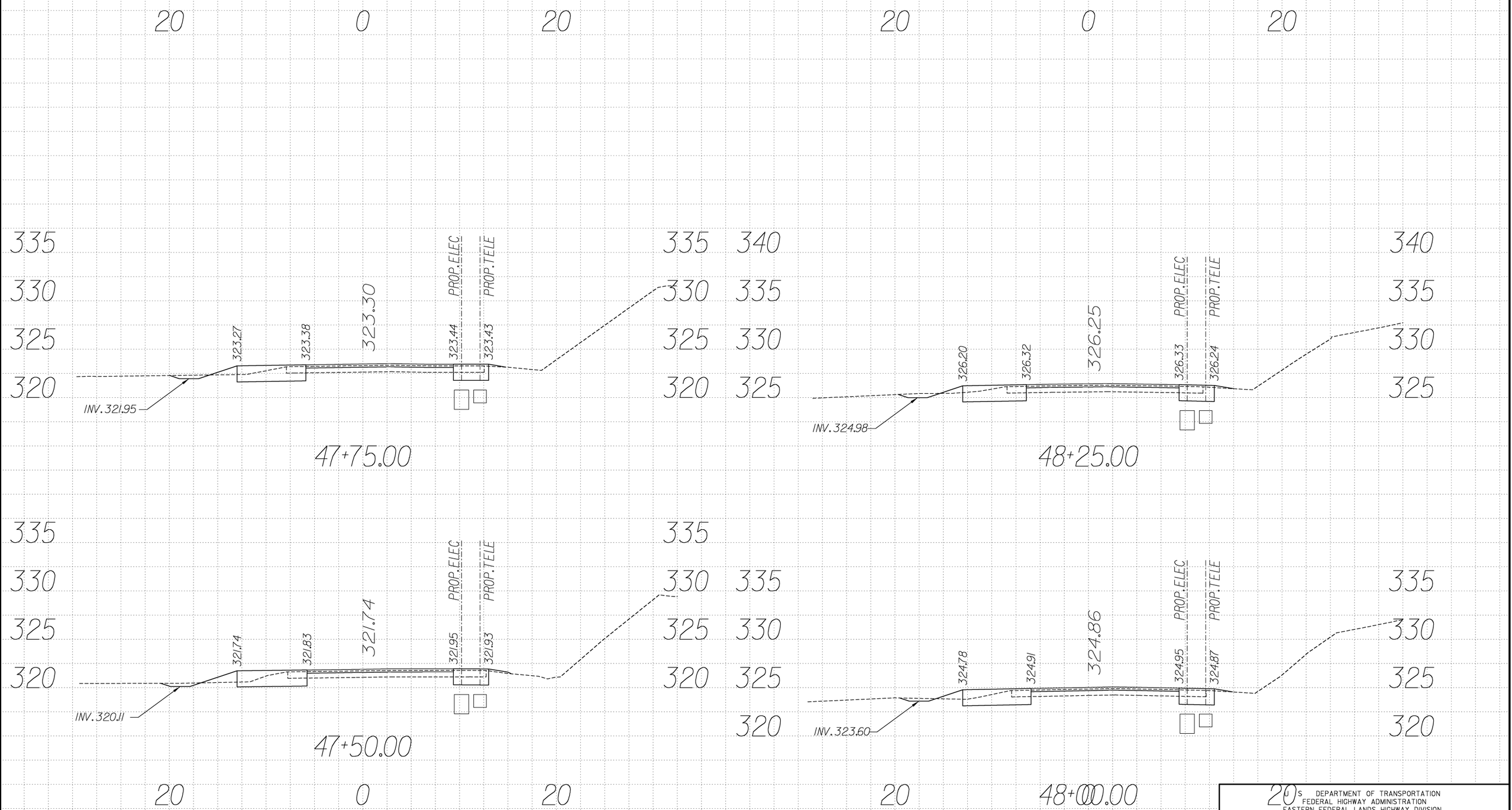

U.S. DEPARTMENT OF TRANSPORTATION
FEDERAL HIGHWAY ADMINISTRATION
EASTERN FEDERAL LANDS HIGHWAY DIVISION
STERLING, VIRGINIA

C&O CANAL NATIONAL HISTORIC PARK
GREAT FALL ENTRANCE ROAD & PARKING LOTS

CROSS SECTIONS

Sta. 47+50 to 48+25

0 5 10
SCALE IN FEET

NPS NO.	REG	STATE	PROJECT	SHEET NO.
412 / 41911	NCR	MD	PRA-CHOH 102 (1)	T36

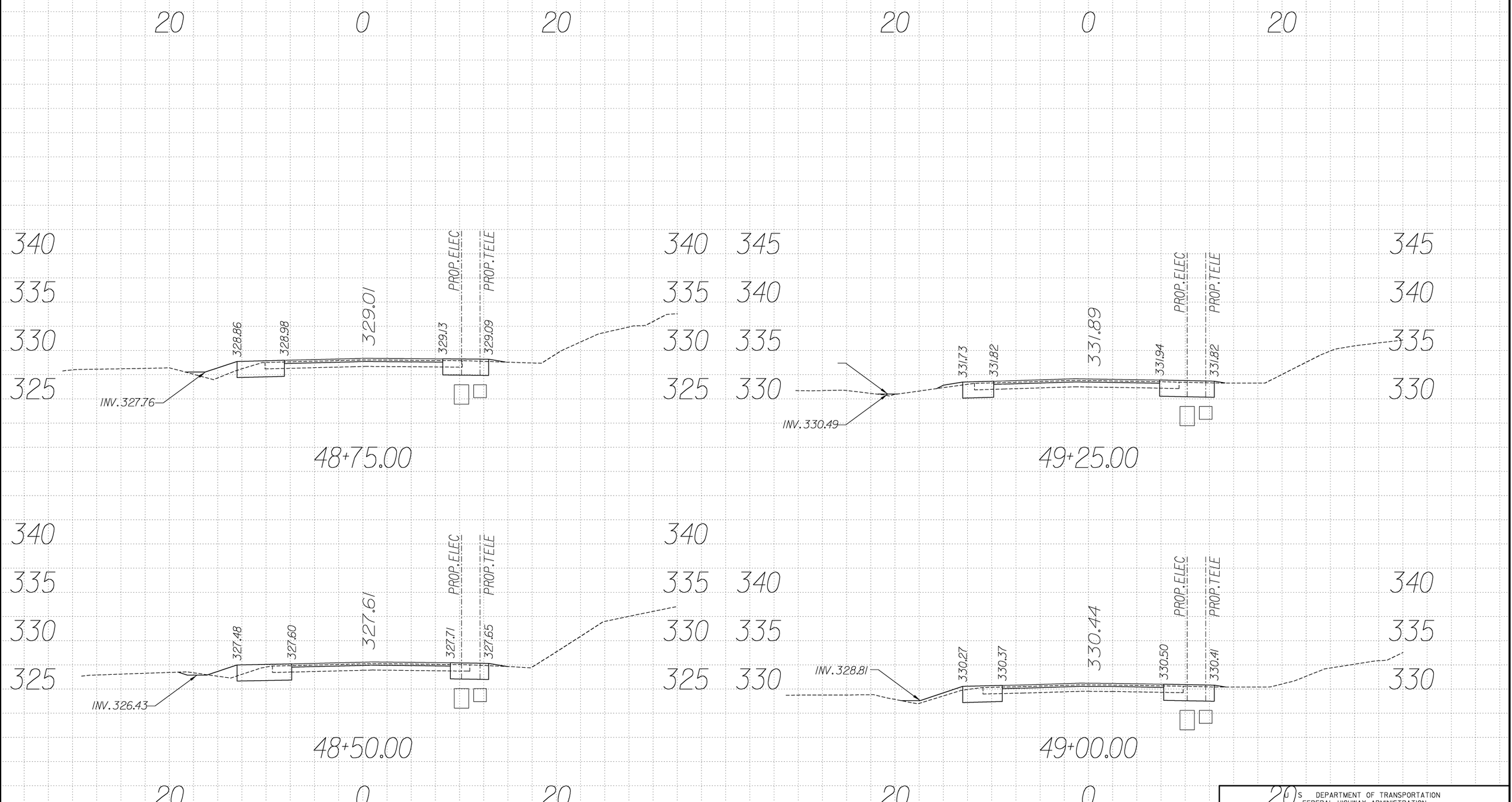

U.S. DEPARTMENT OF TRANSPORTATION
FEDERAL HIGHWAY ADMINISTRATION
EASTERN FEDERAL LANDS HIGHWAY DIVISION
STERLING, VIRGINIA

C&O CANAL NATIONAL HISTORIC PARK
GREAT FALL ENTRANCE ROAD & PARKING LOTS

CROSS SECTIONS
Sta. 48+50 to 49+25

0 5 10
SCALE IN FEET

NPS NO.	REG	STATE	PROJECT	SHEET NO.
412 / 41911	NCR	MD	PRA-CHOH 102 (1)	T37

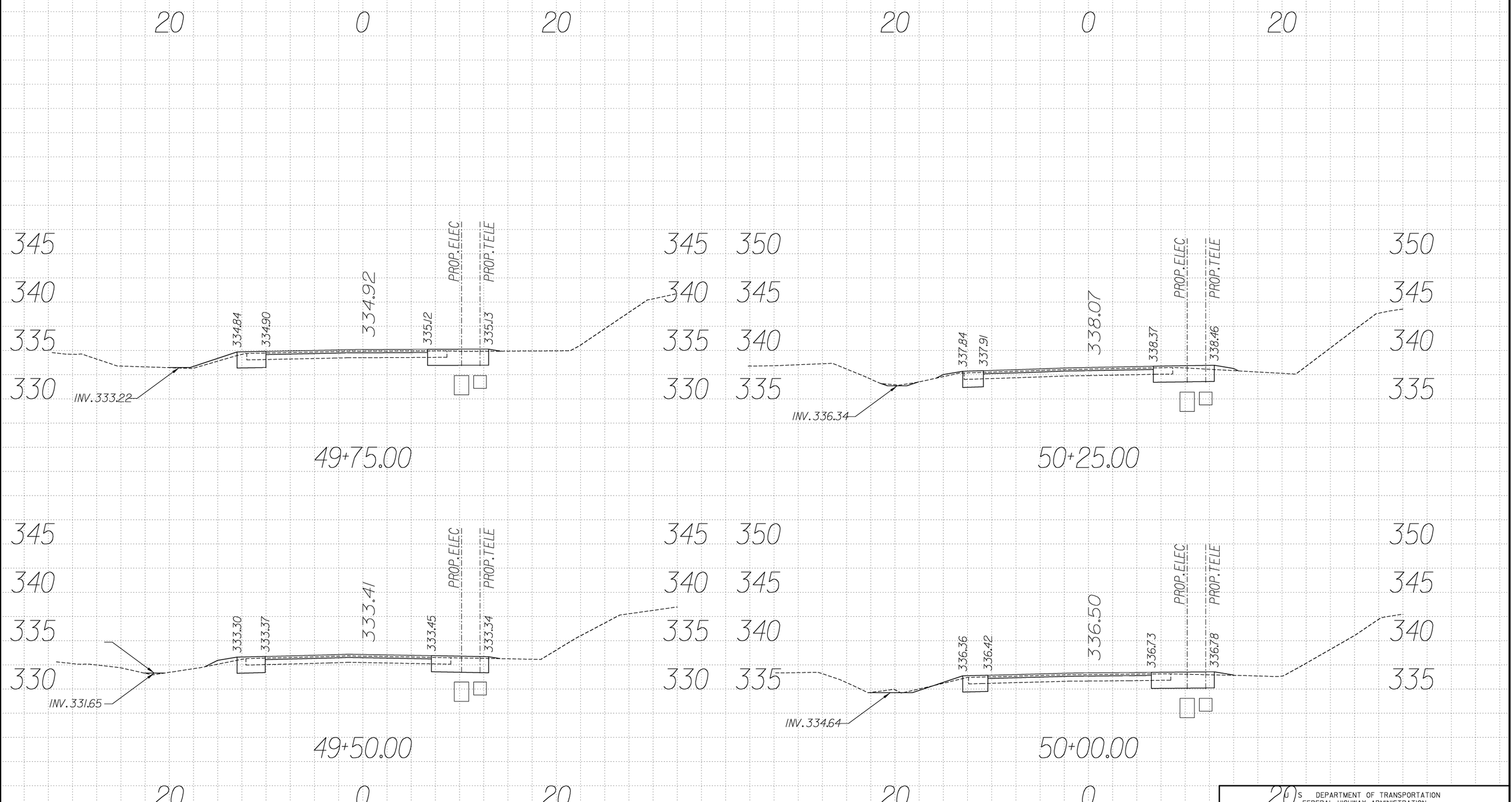

U.S. DEPARTMENT OF TRANSPORTATION
FEDERAL HIGHWAY ADMINISTRATION
EASTERN FEDERAL LANDS HIGHWAY DIVISION
STERLING, VIRGINIA

C&O CANAL NATIONAL HISTORIC PARK
GREAT FALL ENTRANCE ROAD & PARKING LOTS

CROSS SECTIONS
Sta. 49+50 to 50+25

0 5 10
SCALE IN FEET

NPS NO.	REG	STATE	PROJECT	SHEET NO.
412 / 41911	NCR	MD	PRA-CHOH 102 (1)	T38

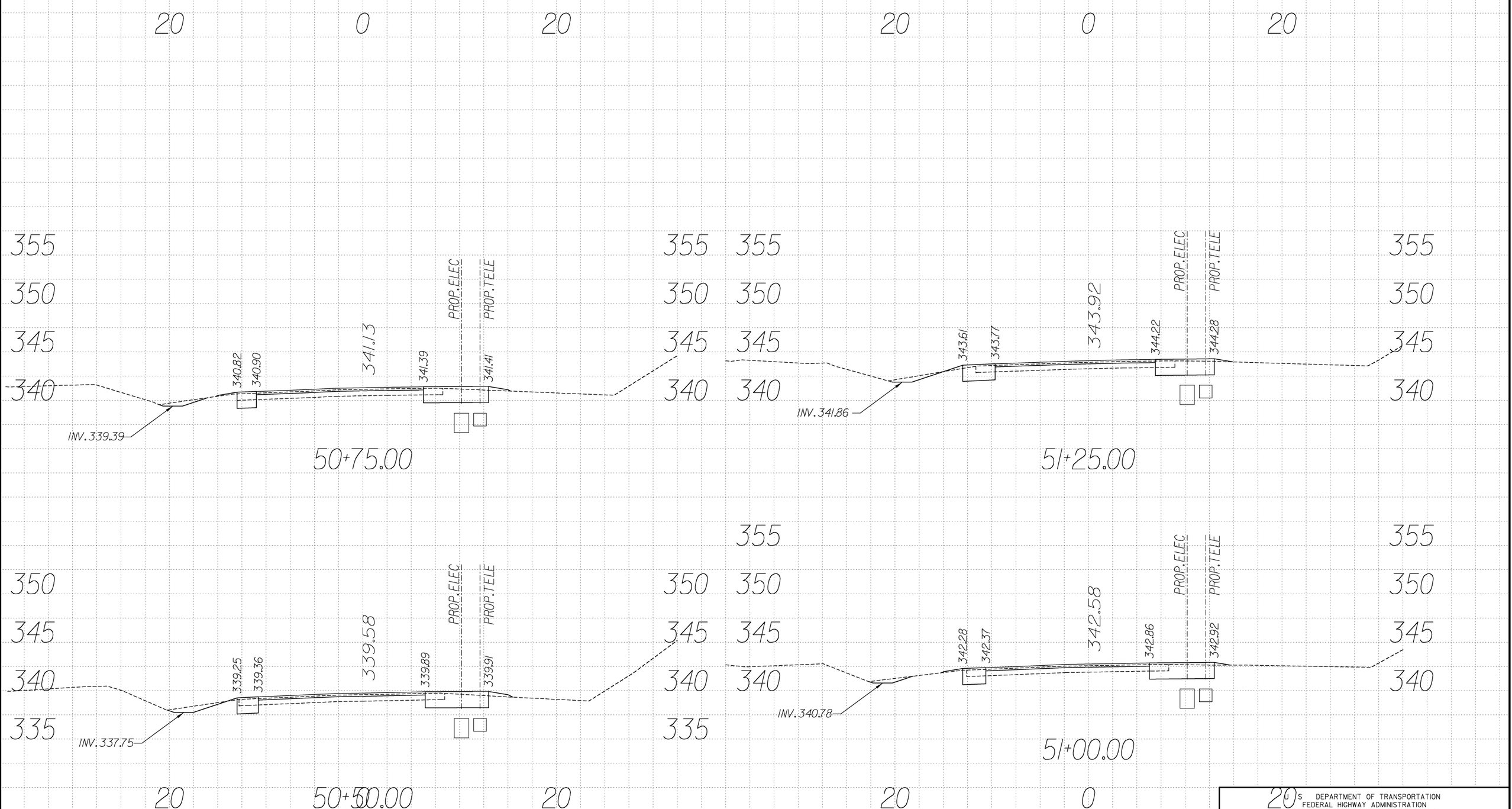

U.S. DEPARTMENT OF TRANSPORTATION
FEDERAL HIGHWAY ADMINISTRATION
EASTERN FEDERAL LANDS HIGHWAY DIVISION
STERLING, VIRGINIA

C&O CANAL NATIONAL HISTORIC PARK
GREAT FALL ENTRANCE ROAD & PARKING LOTS

CROSS SECTIONS
Sta. 50+50 to 51+25

0 5 10
SCALE IN FEET

NPS NO.	REG	STATE	PROJECT	SHEET NO.
412 / 41911	NCR	MD	PRA-CHOH 102 (1)	T39

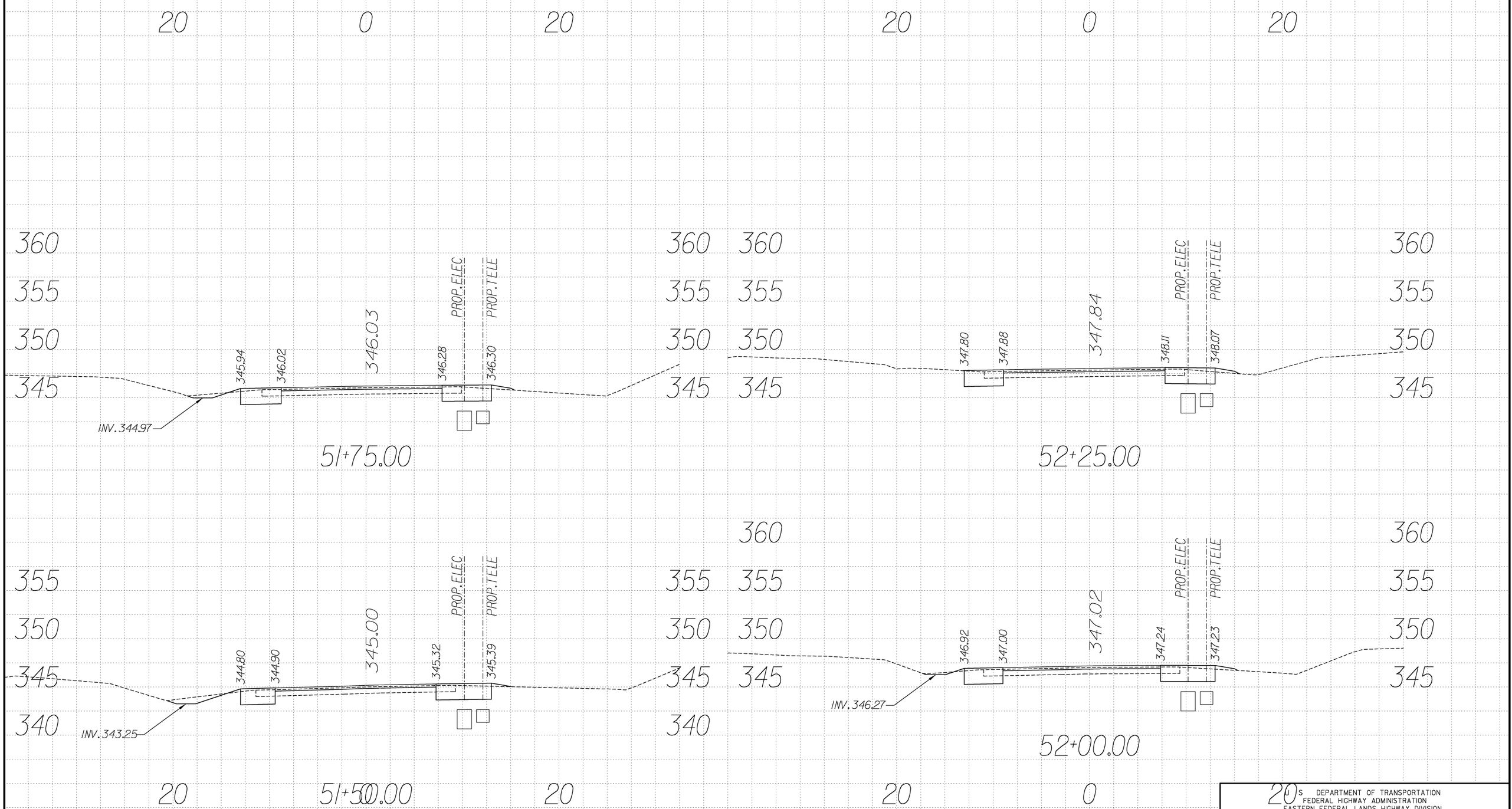

U.S. DEPARTMENT OF TRANSPORTATION
FEDERAL HIGHWAY ADMINISTRATION
EASTERN FEDERAL LANDS HIGHWAY DIVISION
STERLING, VIRGINIA

C&O CANAL NATIONAL HISTORIC PARK
GREAT FALL ENTRANCE ROAD & PARKING LOTS

CROSS SECTIONS
Sta. 51+50 to 52+25

0 5 10
SCALE IN FEET

NPS NO.	REG	STATE	PROJECT	SHEET NO.
412 / 41911	NCR	MD	PRA-CHOH 102 (1)	T40

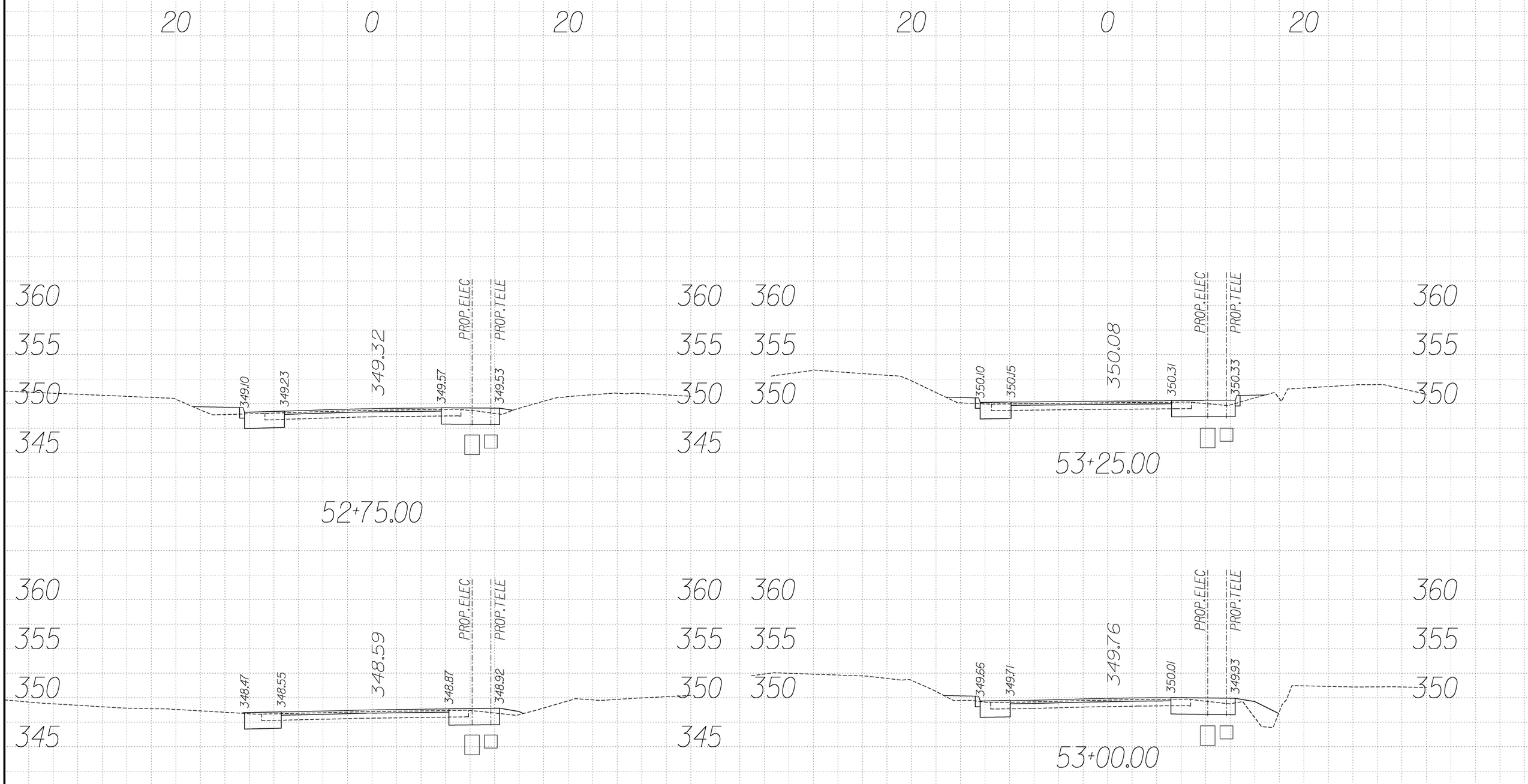

U.S. DEPARTMENT OF TRANSPORTATION
FEDERAL HIGHWAY ADMINISTRATION
EASTERN FEDERAL LANDS HIGHWAY DIVISION
STERLING, VIRGINIA

C&O CANAL NATIONAL HISTORIC PARK
GREAT FALL ENTRANCE ROAD & PARKING LOTS

CROSS SECTIONS

Sta. 52+50 to 53+25

0 5 10
SCALE IN FEET

NPS NO.	REG	STATE	PROJECT	SHEET NO.
412 / 41911	NCR	MD	PRA-CHOH 102 (1)	T41

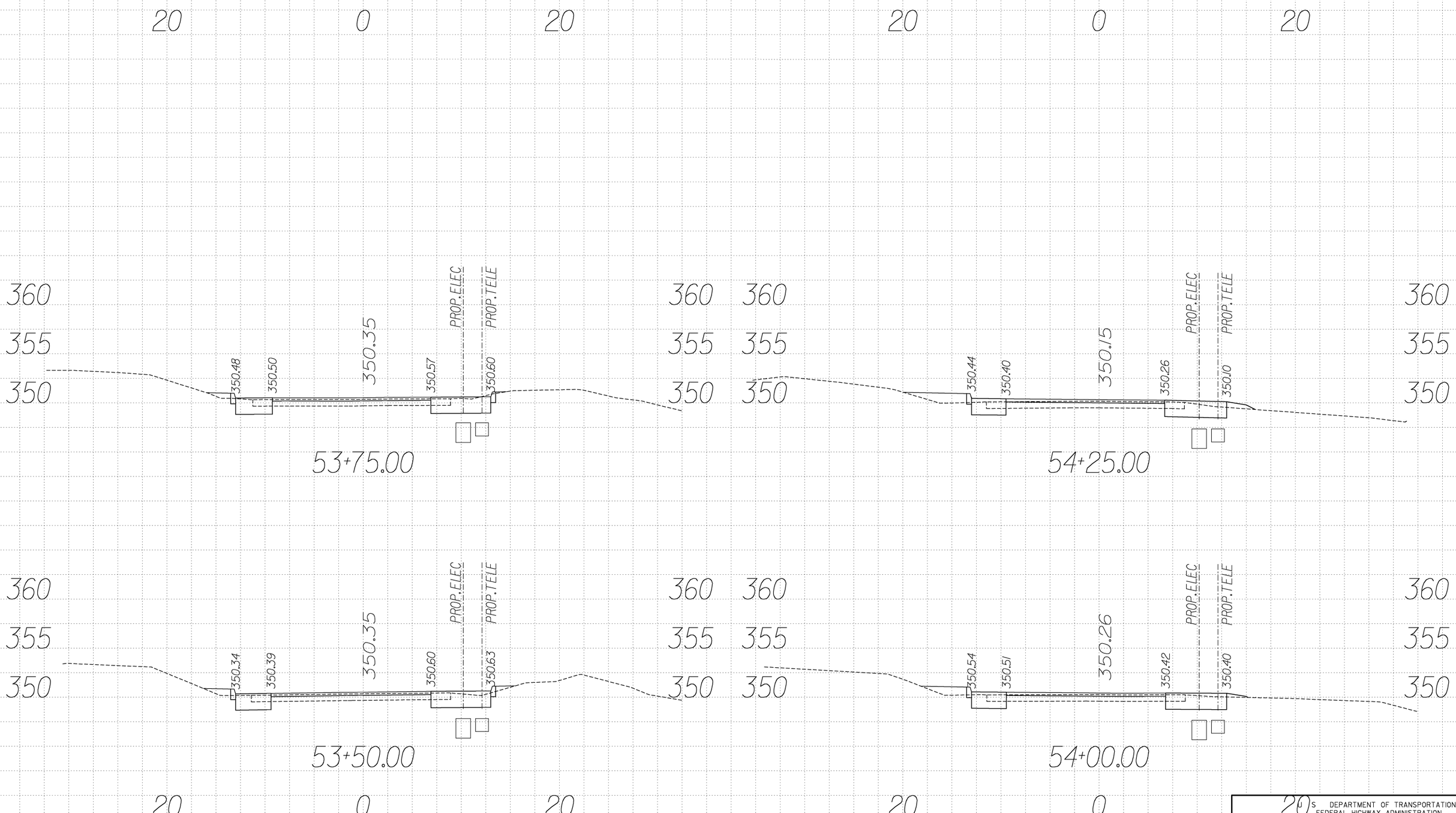

U.S. DEPARTMENT OF TRANSPORTATION
FEDERAL HIGHWAY ADMINISTRATION
EASTERN FEDERAL LANDS HIGHWAY DIVISION
STERLING, VIRGINIA

C&O CANAL NATIONAL HISTORIC PARK
GREAT FALL ENTRANCE ROAD & PARKING LOTS

CROSS SECTIONS
Sta. 53+50 to 54+25

0 5 10
SCALE IN FEET

NPS NO.	REG	STATE	PROJECT	SHEET NO.
412 / 41911	NCR	MD	PRA-CHOH 102 (1)	T42

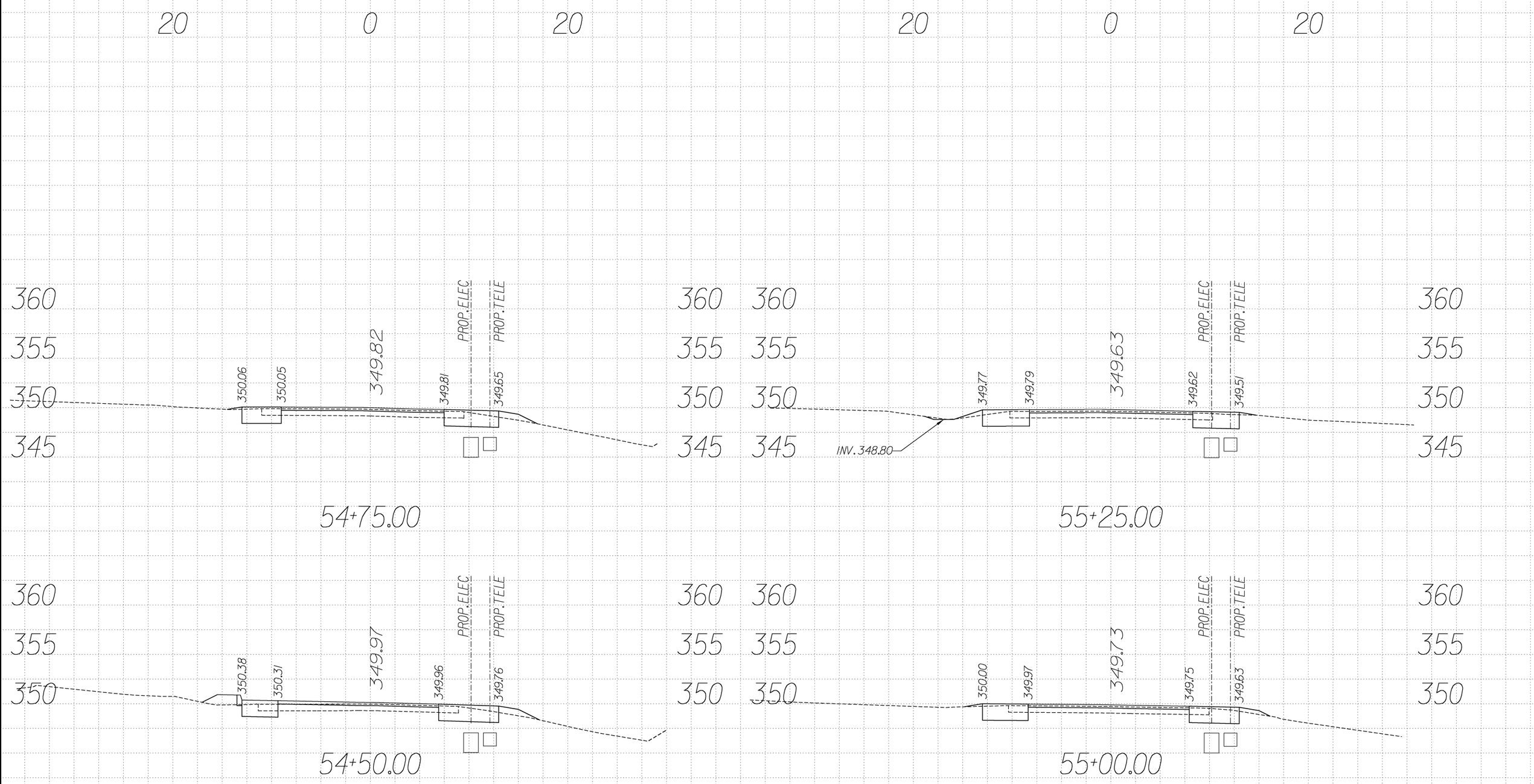

U.S. DEPARTMENT OF TRANSPORTATION
FEDERAL HIGHWAY ADMINISTRATION
EASTERN FEDERAL LANDS HIGHWAY DIVISION
STERLING, VIRGINIA

C&O CANAL NATIONAL HISTORIC PARK
GREAT FALL ENTRANCE ROAD & PARKING LOTS

CROSS SECTIONS
Sta. 54+50 to 55+25

0 5 10
SCALE IN FEET

NPS NO.	REG	STATE	PROJECT	SHEET NO.
412 / 41911	NCR	MD	PRA-CHOH 102 (1)	T43

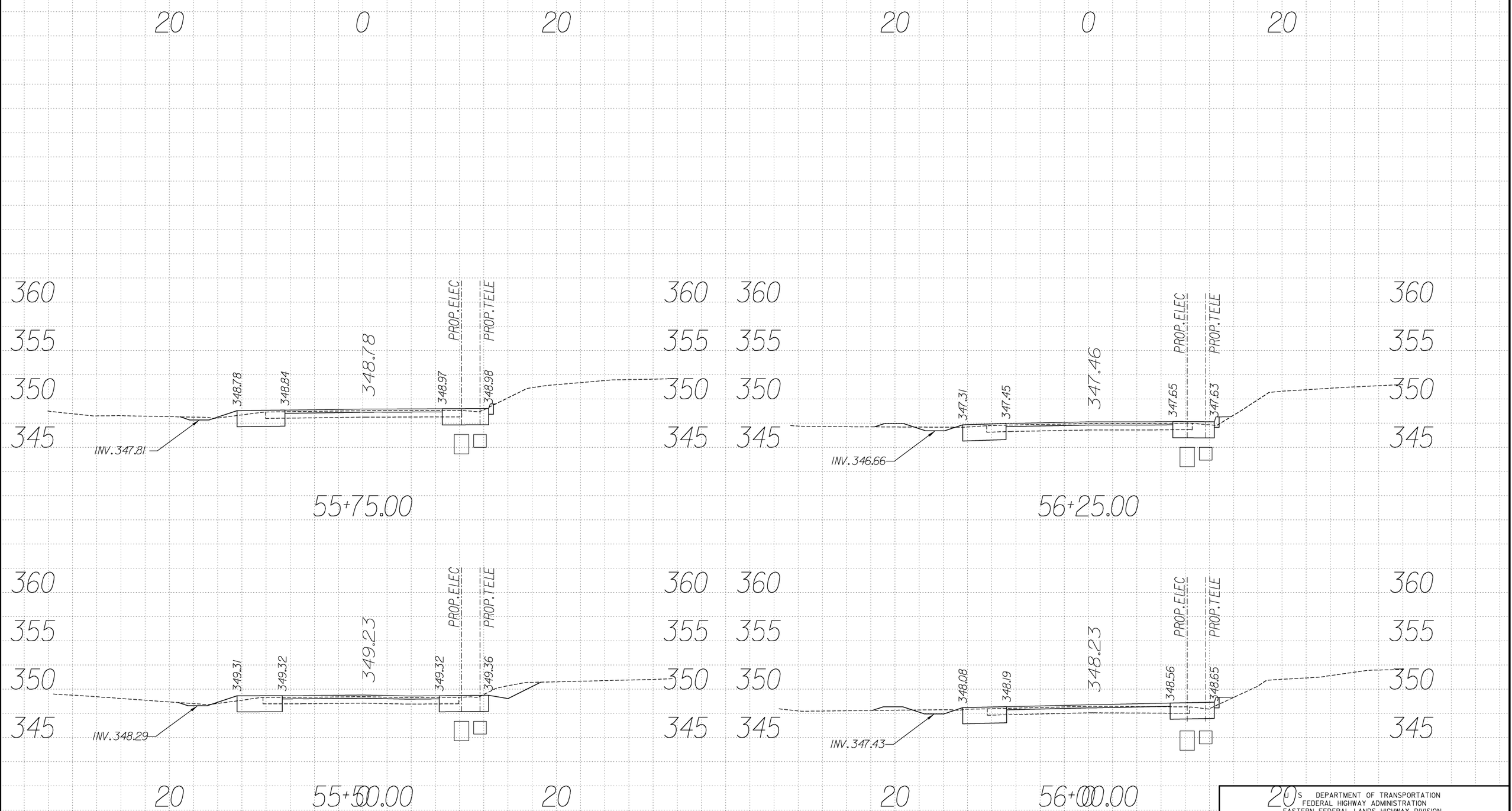

U.S. DEPARTMENT OF TRANSPORTATION
FEDERAL HIGHWAY ADMINISTRATION
EASTERN FEDERAL LANDS HIGHWAY DIVISION
STERLING, VIRGINIA

C&O CANAL NATIONAL HISTORIC PARK
GREAT FALL ENTRANCE ROAD & PARKING LOTS

CROSS SECTIONS

Sta. 55+50 to 56+25

0 5 10
SCALE IN FEET

NPS NO.	REG	STATE	PROJECT	SHEET NO.
412 / 41911	NCR	MD	PRA-CHOH 102 (1)	T44

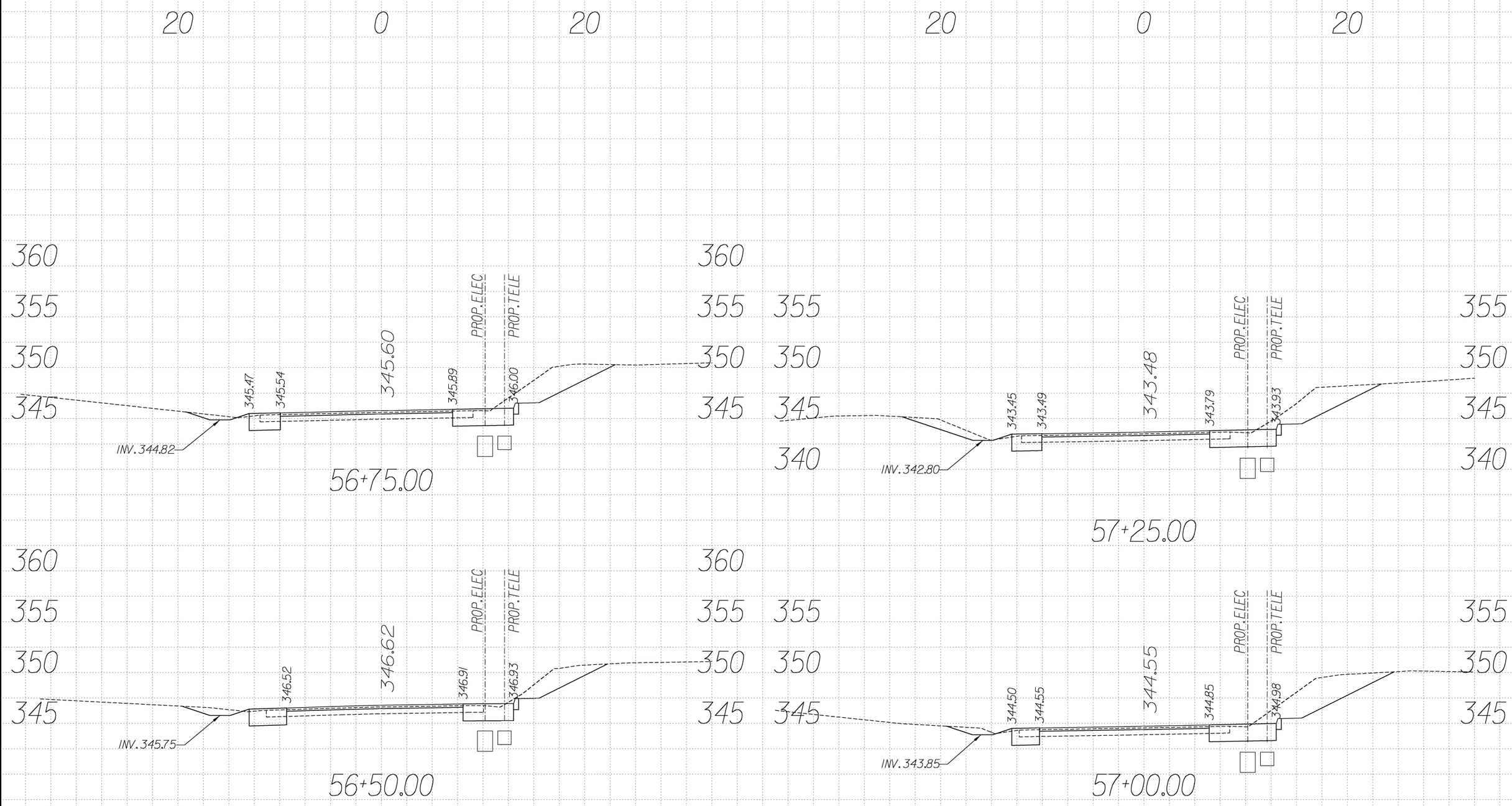

U.S. DEPARTMENT OF TRANSPORTATION
FEDERAL HIGHWAY ADMINISTRATION
EASTERN FEDERAL LANDS HIGHWAY DIVISION
STERLING, VIRGINIA

C&O CANAL NATIONAL HISTORIC PARK
GREAT FALL ENTRANCE ROAD & PARKING LOTS

CROSS SECTIONS

Sta. 56+50 to 57+25

0 5 10
SCALE IN FEET

NPS NO.	REG	STATE	PROJECT	SHEET NO.
412 / 41911	NCR	MD	PRA-CHOH 102 (1)	T45

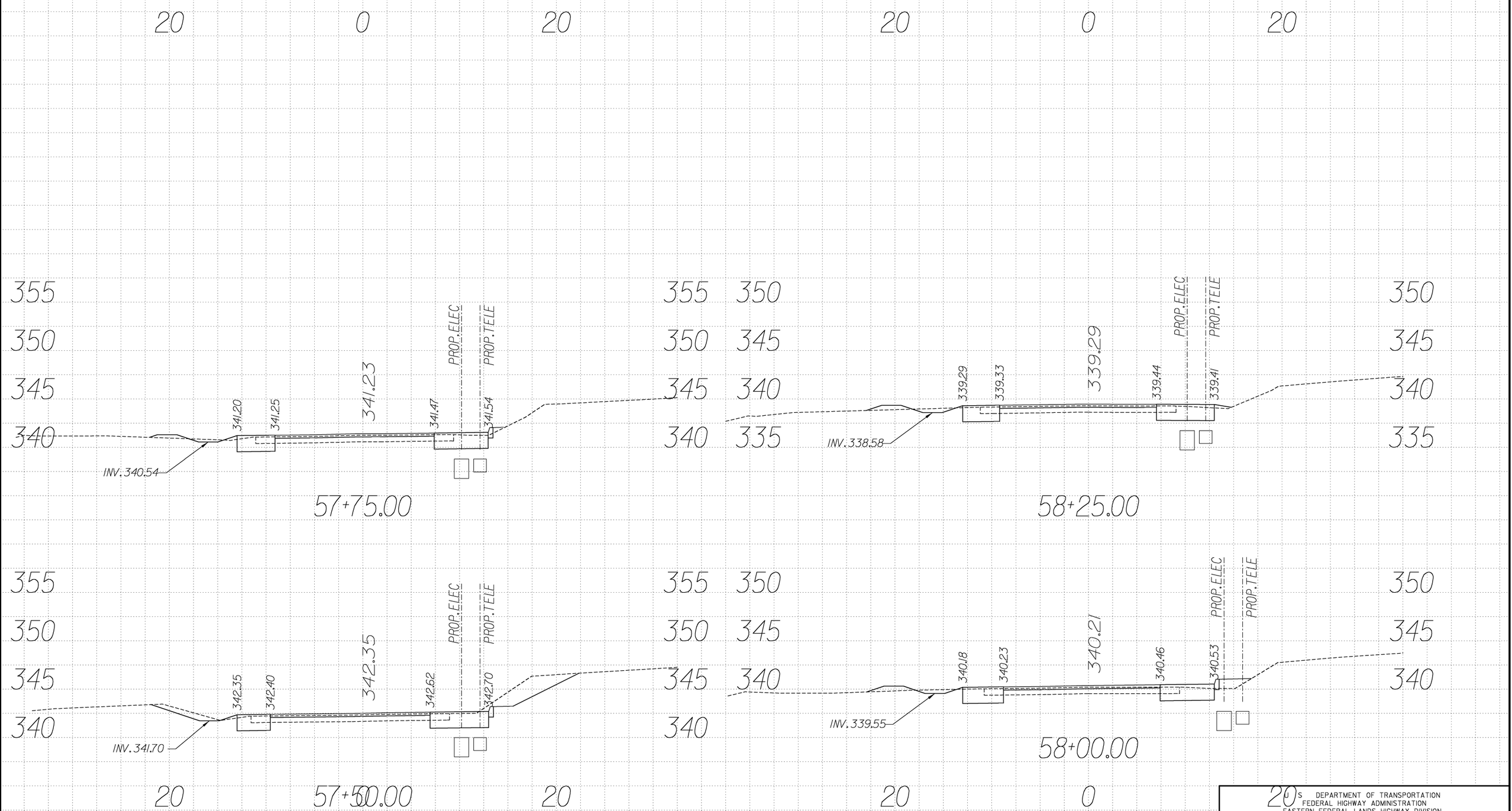

U.S. DEPARTMENT OF TRANSPORTATION
FEDERAL HIGHWAY ADMINISTRATION
EASTERN FEDERAL LANDS HIGHWAY DIVISION
STERLING, VIRGINIA

C&O CANAL NATIONAL HISTORIC PARK
GREAT FALL ENTRANCE ROAD & PARKING LOTS

CROSS SECTIONS

Sta. 57+50 to 58+25

0 5 10
SCALE IN FEET

NPS NO.	REG	STATE	PROJECT	SHEET NO.
412 / 41911	NCR	MD	PRA-CHOH 102 (1)	T46

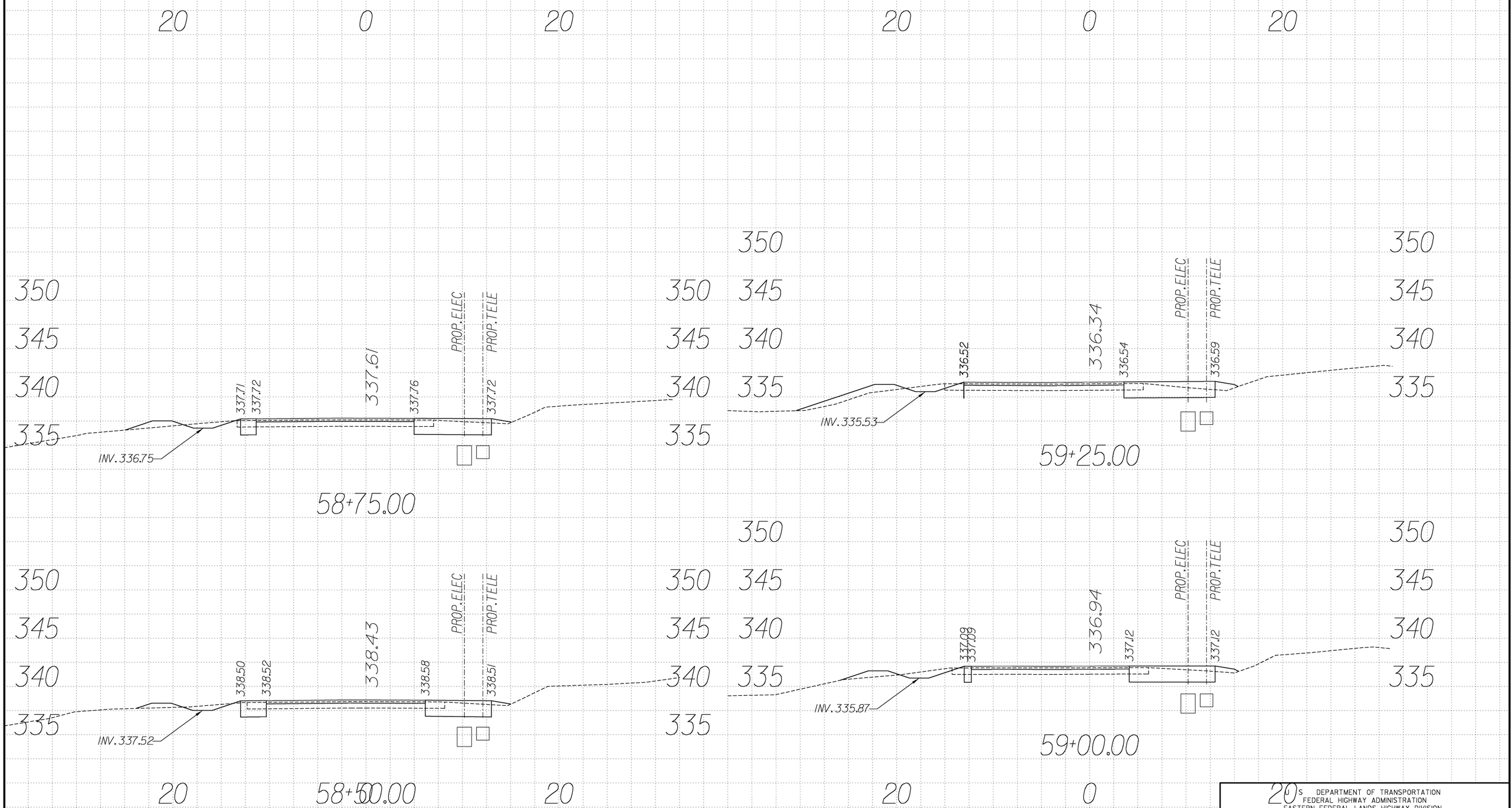

U.S. DEPARTMENT OF TRANSPORTATION
FEDERAL HIGHWAY ADMINISTRATION
EASTERN FEDERAL LANDS HIGHWAY DIVISION
STERLING, VIRGINIA

C&O CANAL NATIONAL HISTORIC PARK
GREAT FALL ENTRANCE ROAD & PARKING LOTS

CROSS SECTIONS

Sta. 58+50 to 59+25

0 5 10
SCALE IN FEET

NPS NO.	REG	STATE	PROJECT	SHEET NO.
412 / 41911	NCR	MD	PRA-CHOH 102 (1)	T47

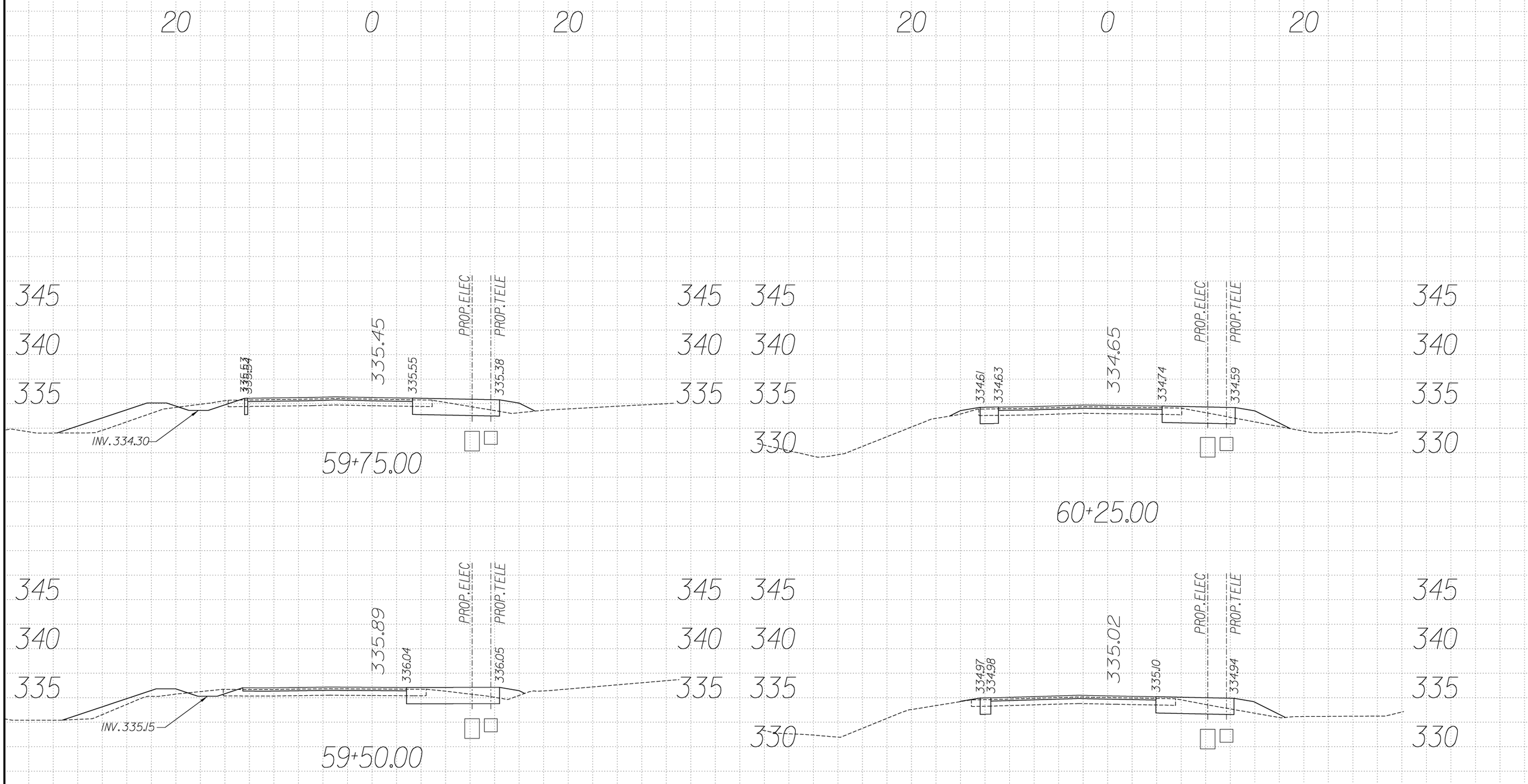

U.S. DEPARTMENT OF TRANSPORTATION
FEDERAL HIGHWAY ADMINISTRATION
EASTERN FEDERAL LANDS HIGHWAY DIVISION
STERLING, VIRGINIA

C&O CANAL NATIONAL HISTORIC PARK
GREAT FALL ENTRANCE ROAD & PARKING LOTS

CROSS SECTIONS
Sta. 59+50 to 60+25

0 5 10
SCALE IN FEET

NPS NO.	REG	STATE	PROJECT	SHEET NO.
412 / 41911	NCR	MD	PRA-CHOH 102 (1)	T48

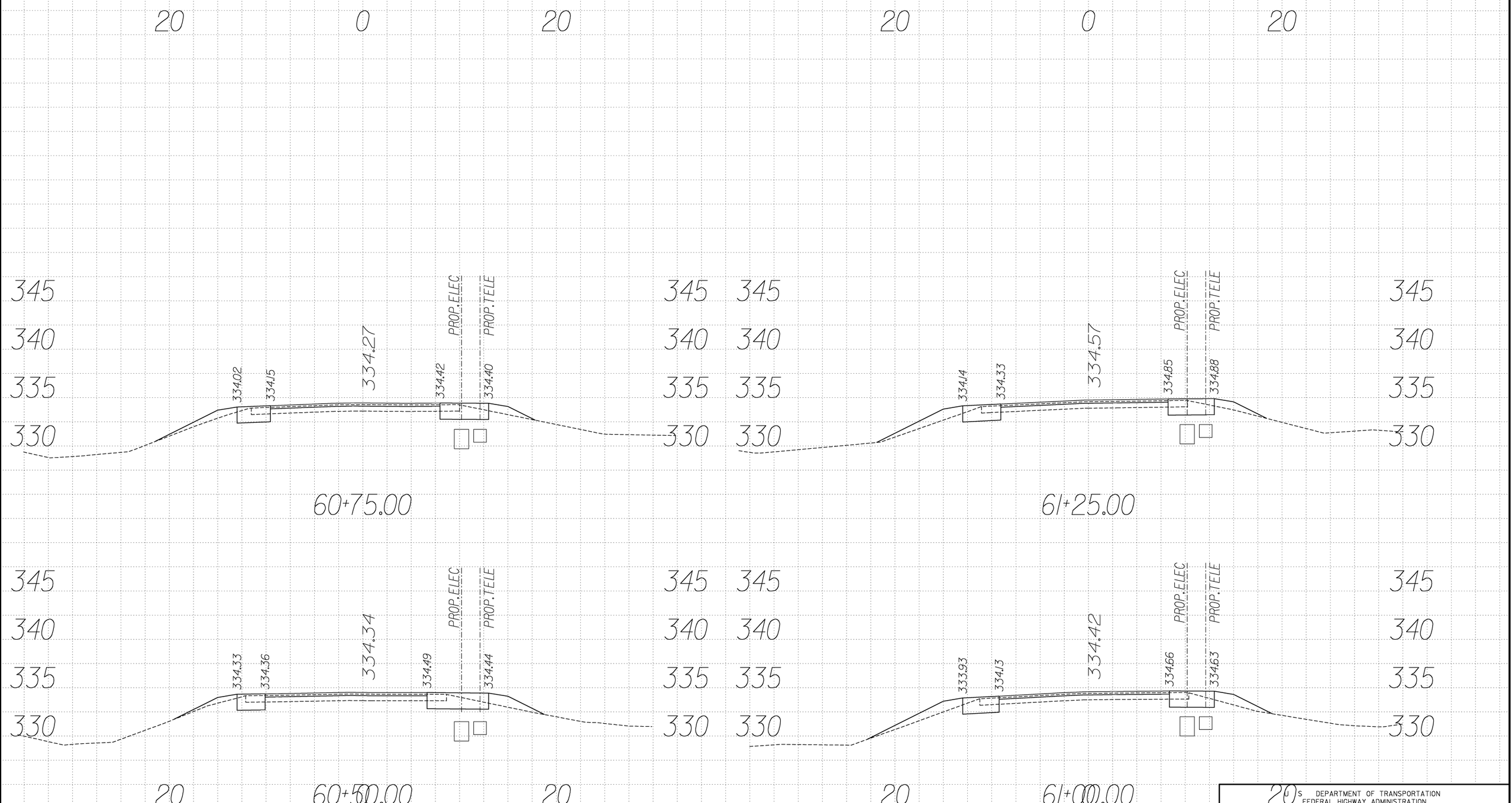

U.S. DEPARTMENT OF TRANSPORTATION
FEDERAL HIGHWAY ADMINISTRATION
EASTERN FEDERAL LANDS HIGHWAY DIVISION
STERLING, VIRGINIA

C&O CANAL NATIONAL HISTORIC PARK
GREAT FALL ENTRANCE ROAD & PARKING LOTS

CROSS SECTIONS
Sta. 60+50 to 61+25

0 5 10
SCALE IN FEET

NPS NO.	REG	STATE	PROJECT	SHEET NO.
412 / 41911	NCR	MD	PRA-CHOH 102 (1)	T49

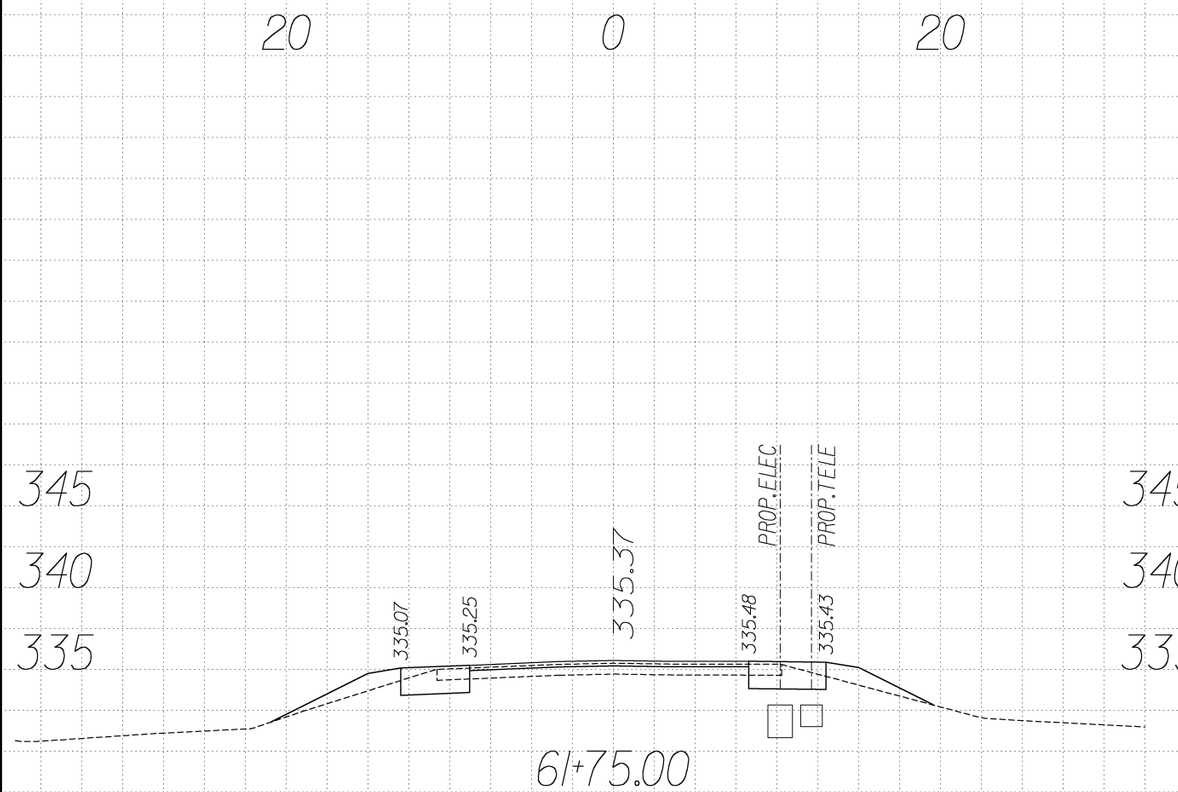

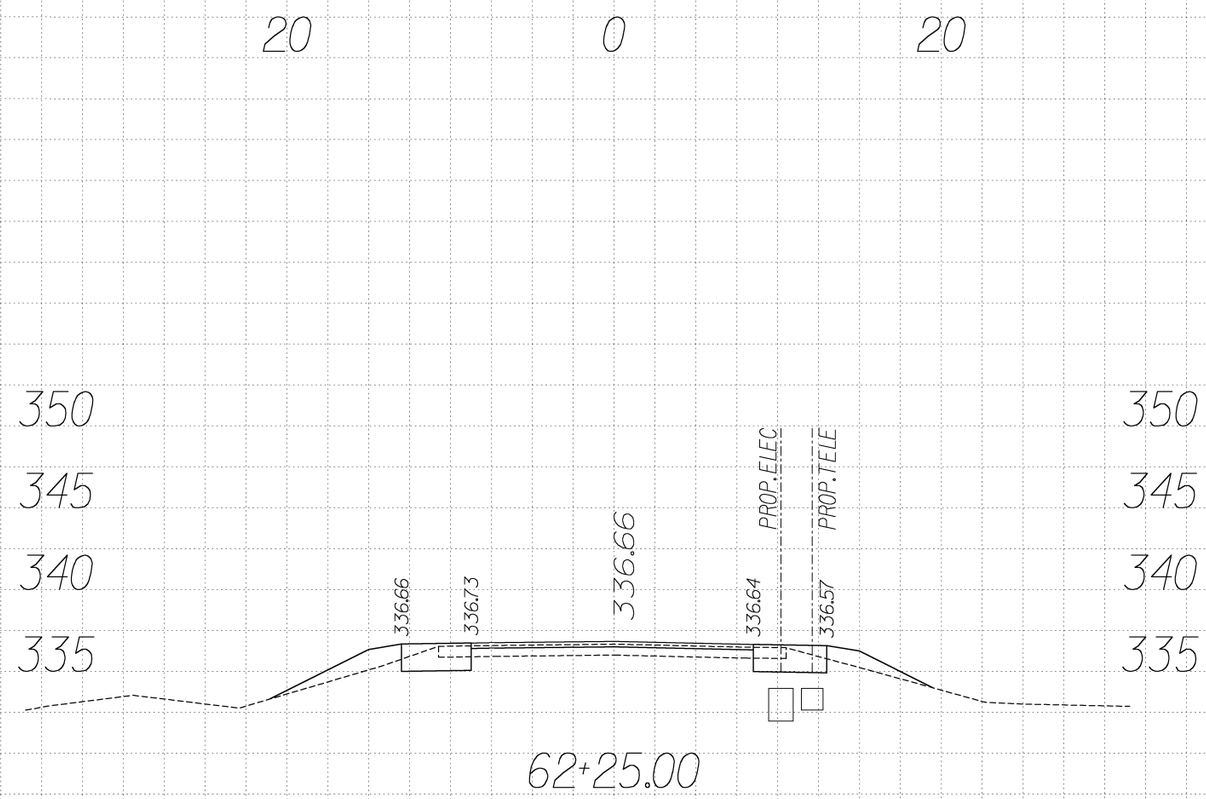

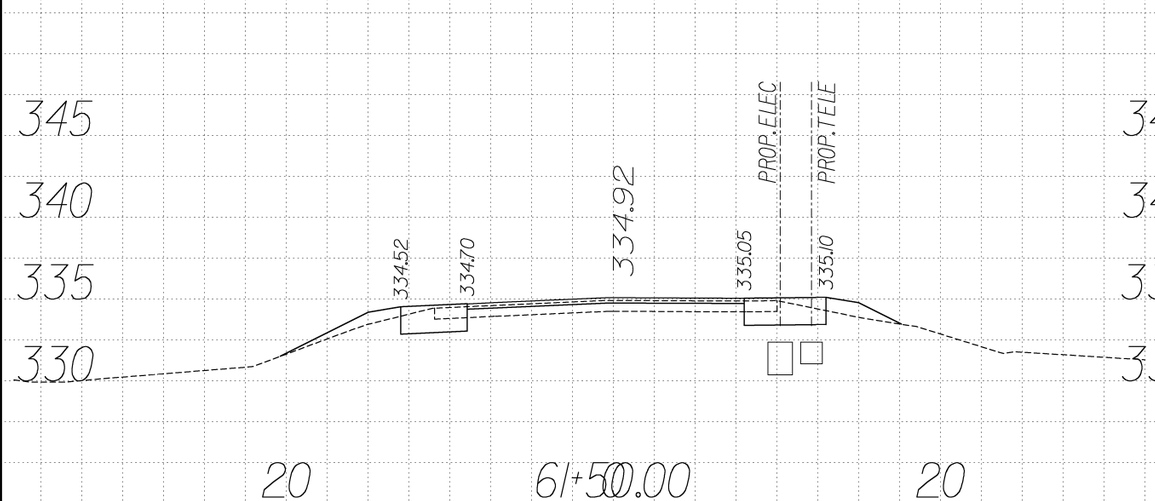

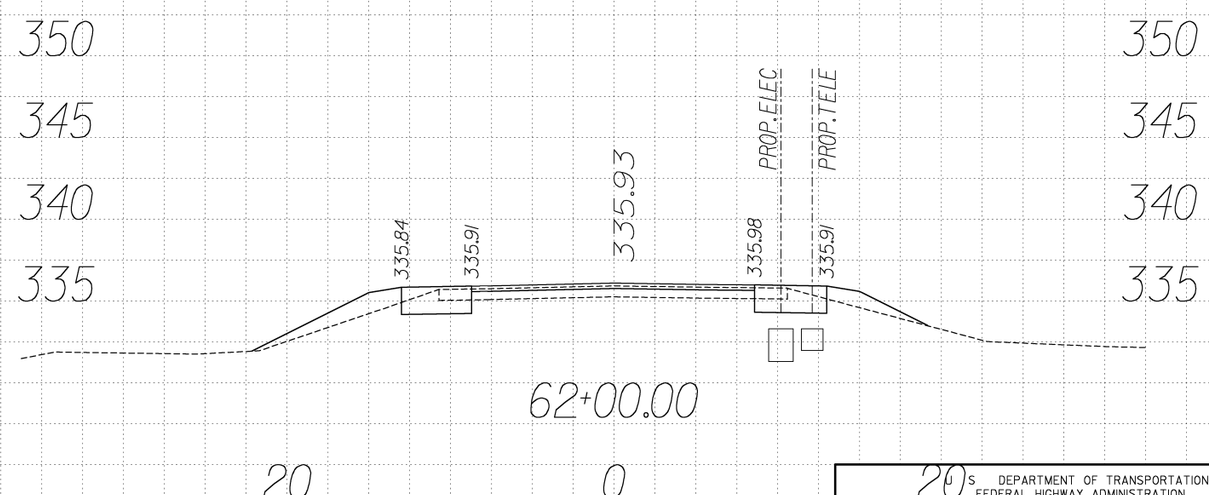

U.S. DEPARTMENT OF TRANSPORTATION
FEDERAL HIGHWAY ADMINISTRATION
EASTERN FEDERAL LANDS HIGHWAY DIVISION
STERLING, VIRGINIA

C&O CANAL NATIONAL HISTORIC PARK
GREAT FALL ENTRANCE ROAD & PARKING LOTS

CROSS SECTIONS
Sta. 61+50 to 62+25

0 5 10
SCALE IN FEET

NPS NO.	REG	STATE	PROJECT	SHEET NO.
412 / 41911	NCR	MD	PRA-CHOH 102 (1)	T50

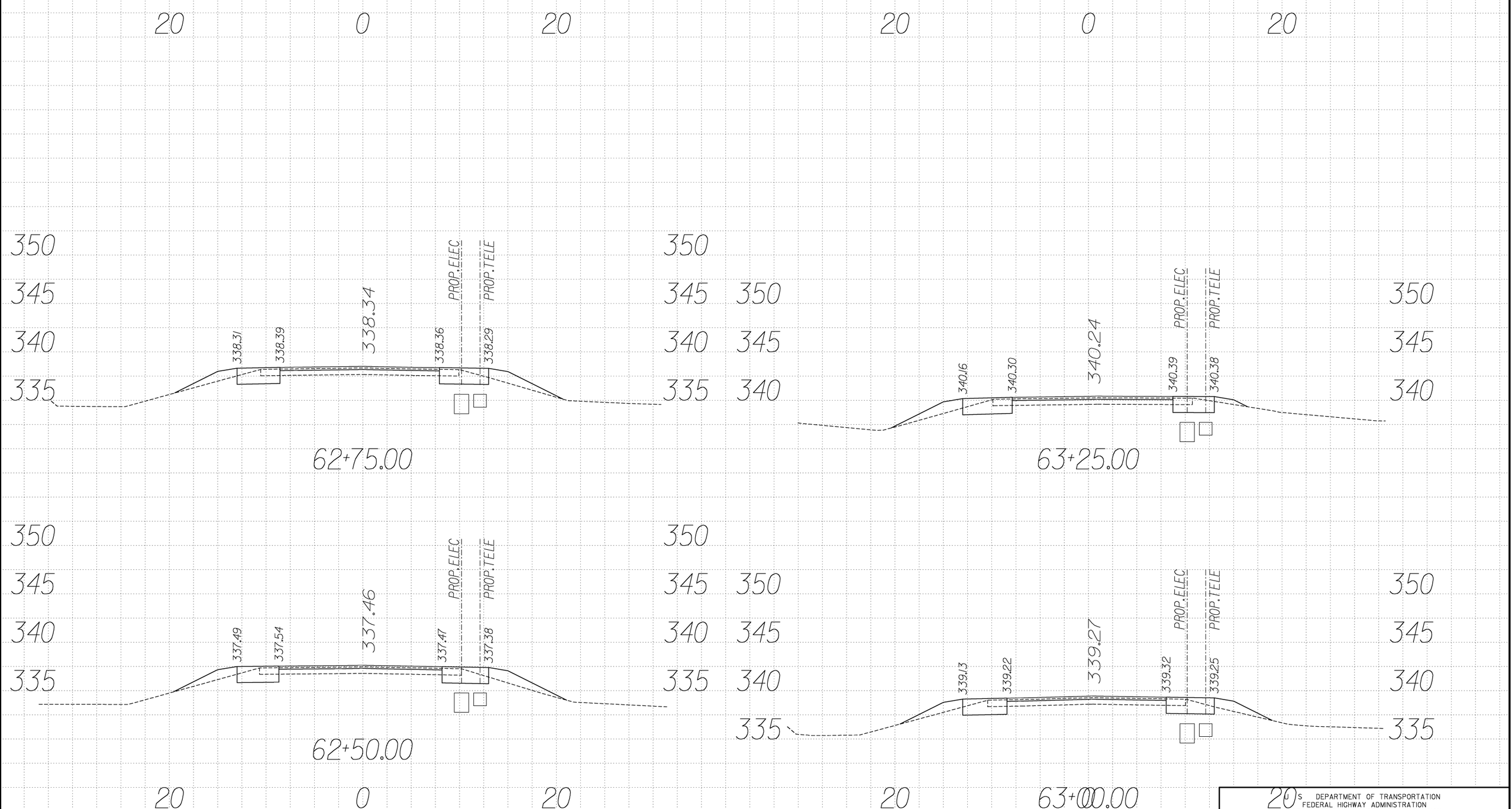

U.S. DEPARTMENT OF TRANSPORTATION
FEDERAL HIGHWAY ADMINISTRATION
EASTERN FEDERAL LANDS HIGHWAY DIVISION
STERLING, VIRGINIA

C&O CANAL NATIONAL HISTORIC PARK
GREAT FALL ENTRANCE ROAD & PARKING LOTS

CROSS SECTIONS
Sta. 62+50 to 63+25

0 5 10
SCALE IN FEET

NPS NO.	REG	STATE	PROJECT	SHEET NO.
412 / 41911	NCR	MD	PRA-CHOH 102 (1)	T51

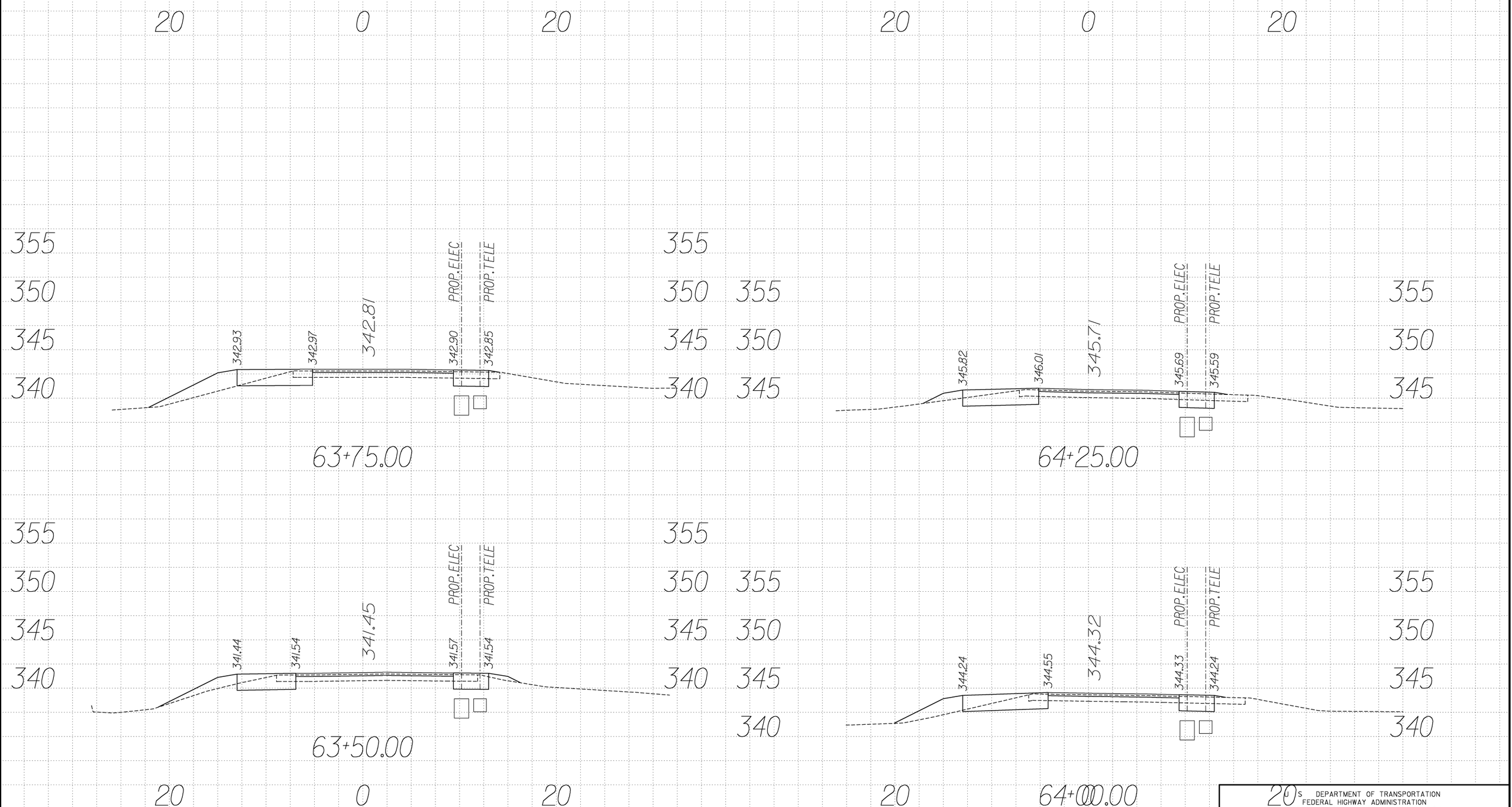

U.S. DEPARTMENT OF TRANSPORTATION
FEDERAL HIGHWAY ADMINISTRATION
EASTERN FEDERAL LANDS HIGHWAY DIVISION
STERLING, VIRGINIA

C&O CANAL NATIONAL HISTORIC PARK
GREAT FALL ENTRANCE ROAD & PARKING LOTS

CROSS SECTIONS
Sta. 63+50 to 64+25

0 5 10
SCALE IN FEET

NPS NO.	REG	STATE	PROJECT	SHEET NO.
412 / 41911	NCR	MD	PRA-CHOH 102 (1)	T52

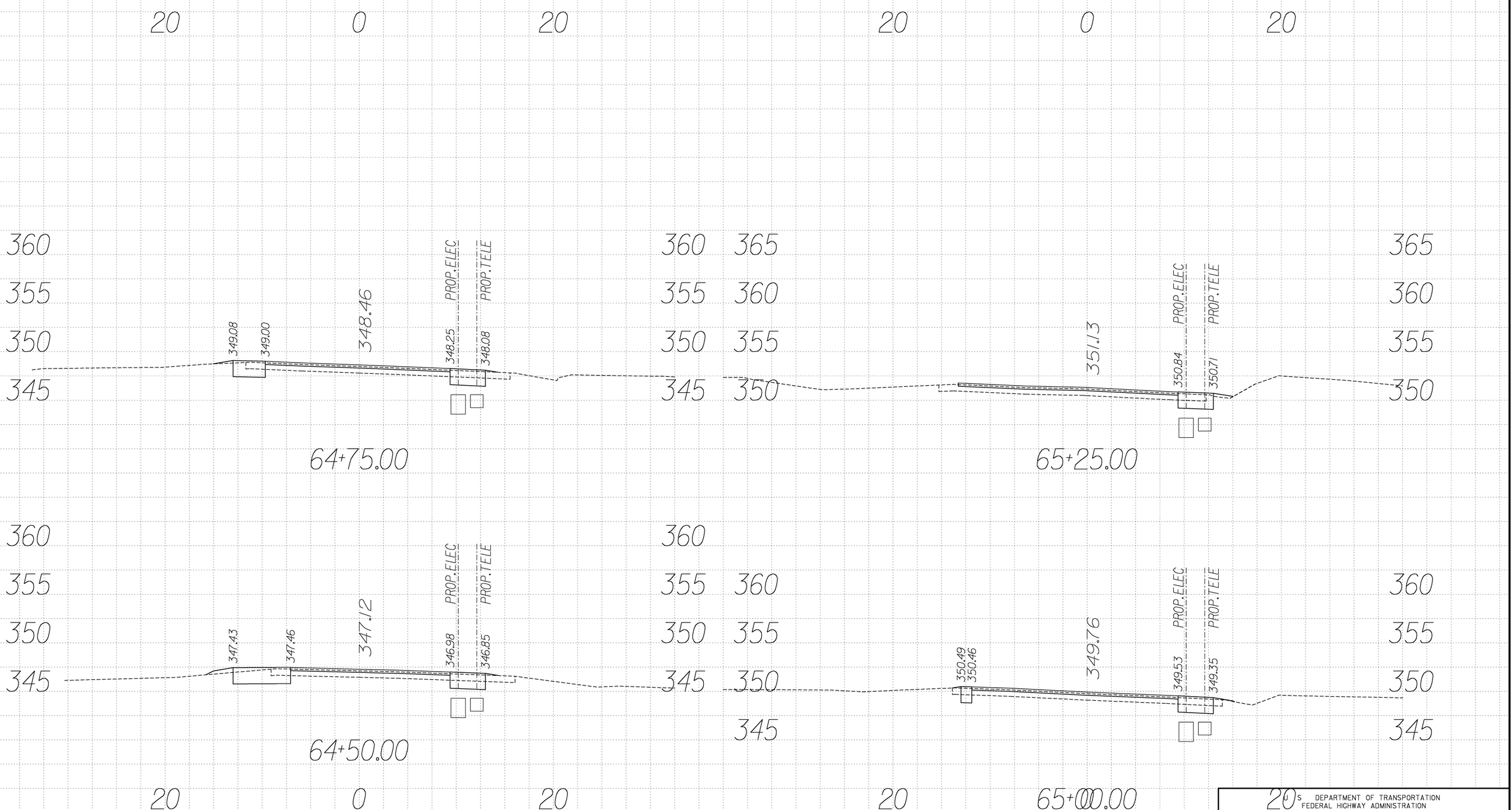

U.S. DEPARTMENT OF TRANSPORTATION
FEDERAL HIGHWAY ADMINISTRATION
EASTERN FEDERAL LANDS HIGHWAY DIVISION
STERLING, VIRGINIA

C&O CANAL NATIONAL HISTORIC PARK
GREAT FALL ENTRANCE ROAD & PARKING LOTS

CROSS SECTIONS

Sta. 64+50 to 65+25

0 5 10
SCALE IN FEET

NPS NO.	REG	STATE	PROJECT	SHEET NO.
412 / 41911	NCR	MD	PRA-CHOH 102 (1)	T53

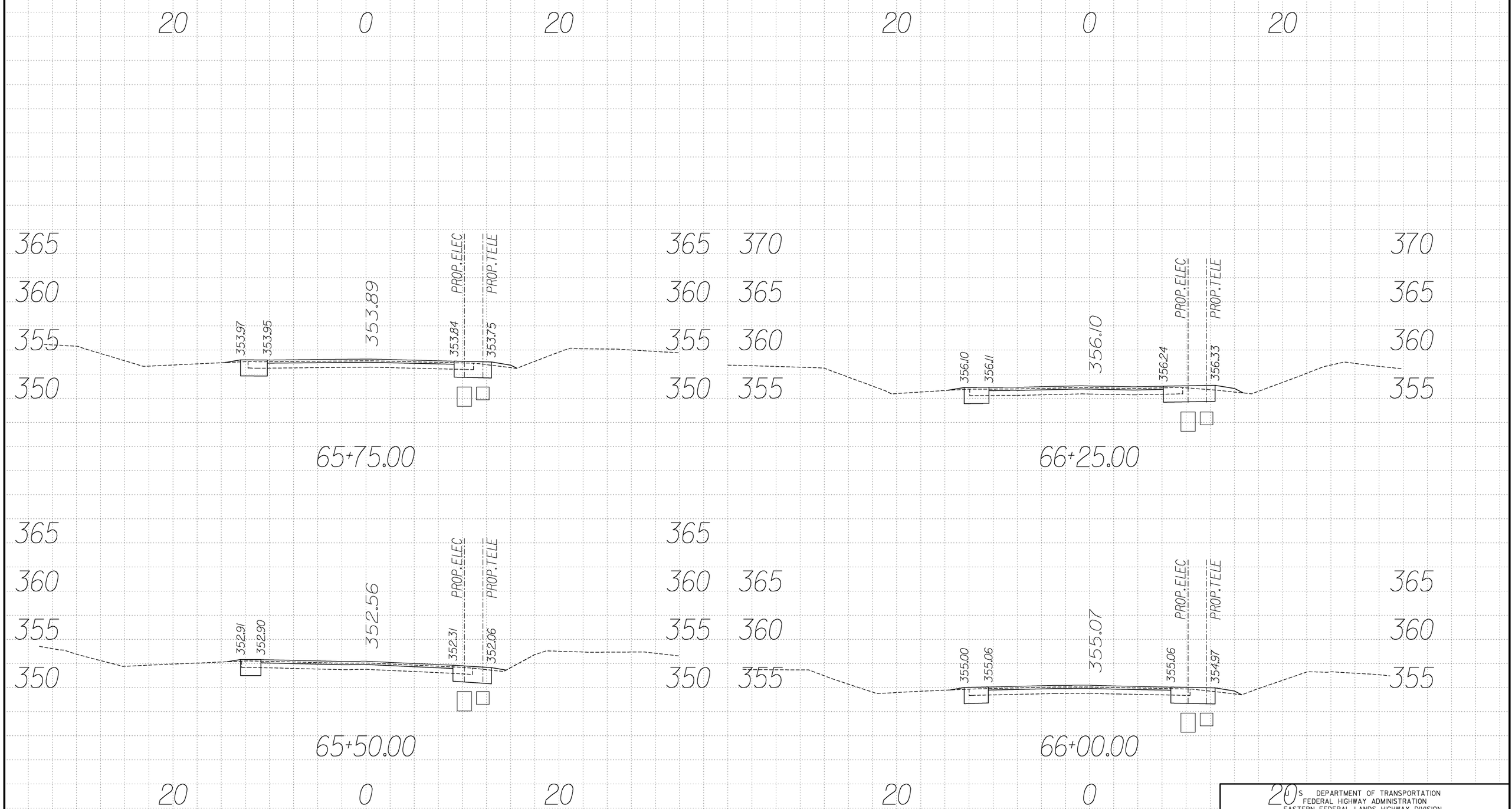

U.S. DEPARTMENT OF TRANSPORTATION
FEDERAL HIGHWAY ADMINISTRATION
EASTERN FEDERAL LANDS HIGHWAY DIVISION
STERLING, VIRGINIA

C&O CANAL NATIONAL HISTORIC PARK
GREAT FALL ENTRANCE ROAD & PARKING LOTS

CROSS SECTIONS
Sta. 65+50 to 66+25

0 5 10
SCALE IN FEET

NPS NO.	REG	STATE	PROJECT	SHEET NO.
412 / 41911	NCR	MD	PRA-CHOH 102 (1)	T54

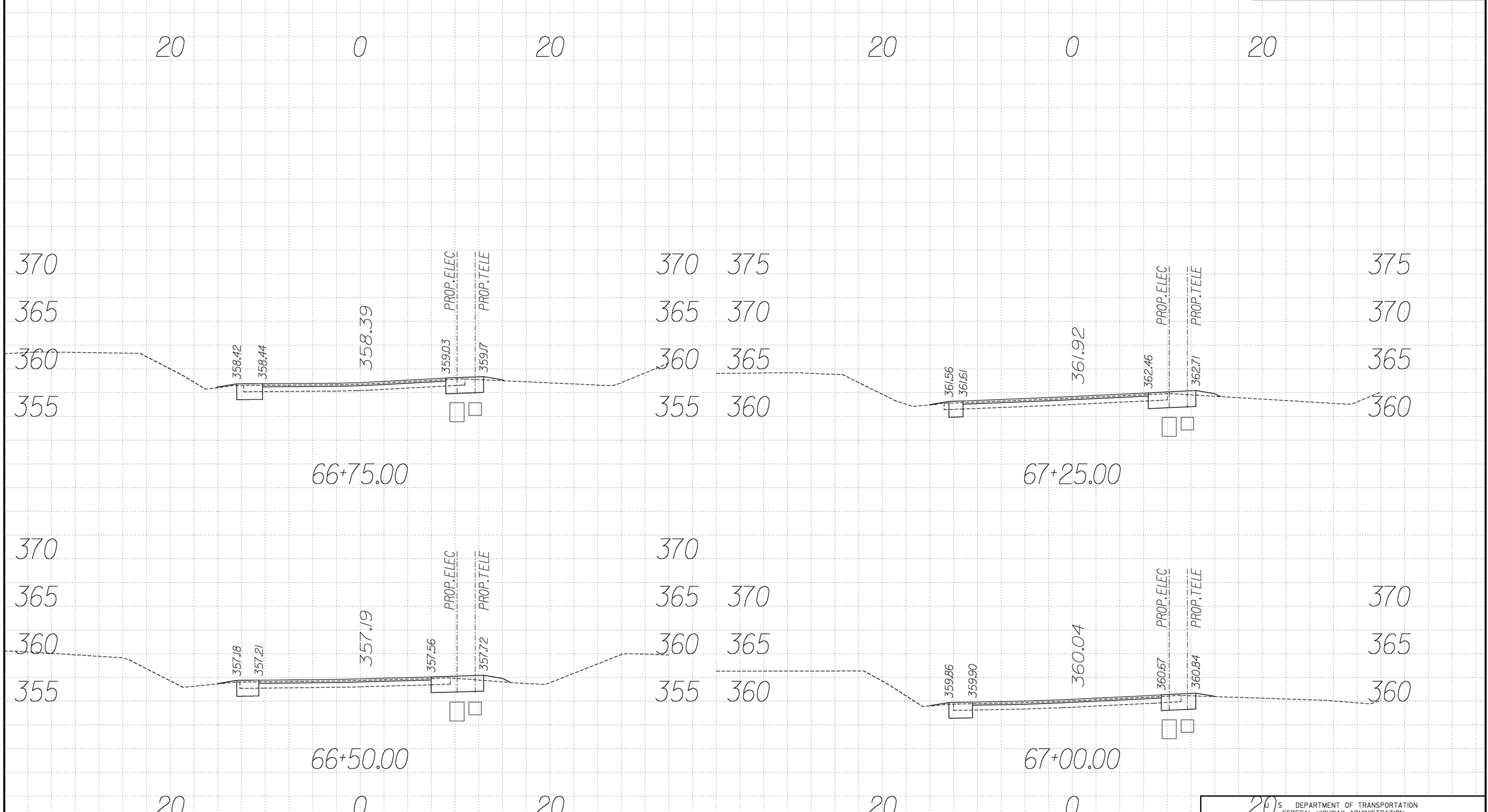

U.S. DEPARTMENT OF TRANSPORTATION
FEDERAL HIGHWAY ADMINISTRATION
EASTERN FEDERAL LANDS HIGHWAY DIVISION
STERLING, VIRGINIA

C&O CANAL NATIONAL HISTORIC PARK
GREAT FALL ENTRANCE ROAD & PARKING LOTS

CROSS SECTIONS
Sta. 66+50 to 67+25

0 5 10
SCALE IN FEET

NPS NO.	REG	STATE	PROJECT	SHEET NO.
412 / 41911	NCR	MD	PRA-CHOH 102 (1)	T55

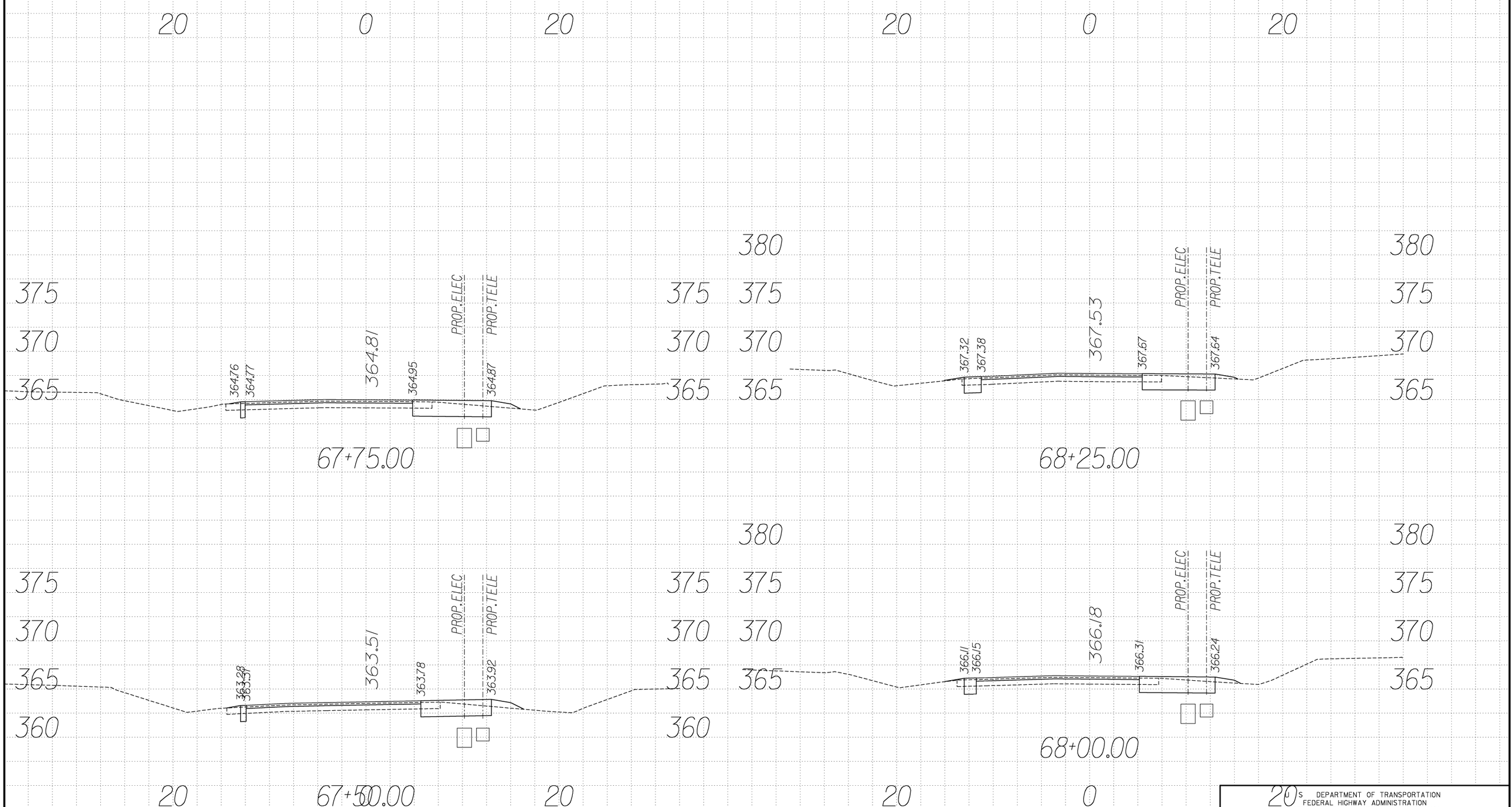

U.S. DEPARTMENT OF TRANSPORTATION
FEDERAL HIGHWAY ADMINISTRATION
EASTERN FEDERAL LANDS HIGHWAY DIVISION
STERLING, VIRGINIA

C&O CANAL NATIONAL HISTORIC PARK
GREAT FALL ENTRANCE ROAD & PARKING LOTS

CROSS SECTIONS
Sta. 67+50 to 68+25

0 5 10
SCALE IN FEET

9/20/2007 8:58:34 AM o:\dlf000117\01\cad\geopak\cs01c&o.dgn

NPS NO.	REG	STATE	PROJECT	SHEET NO.
412 / 41911	NCR	MD	PRA-CHOH 102 (1)	T56

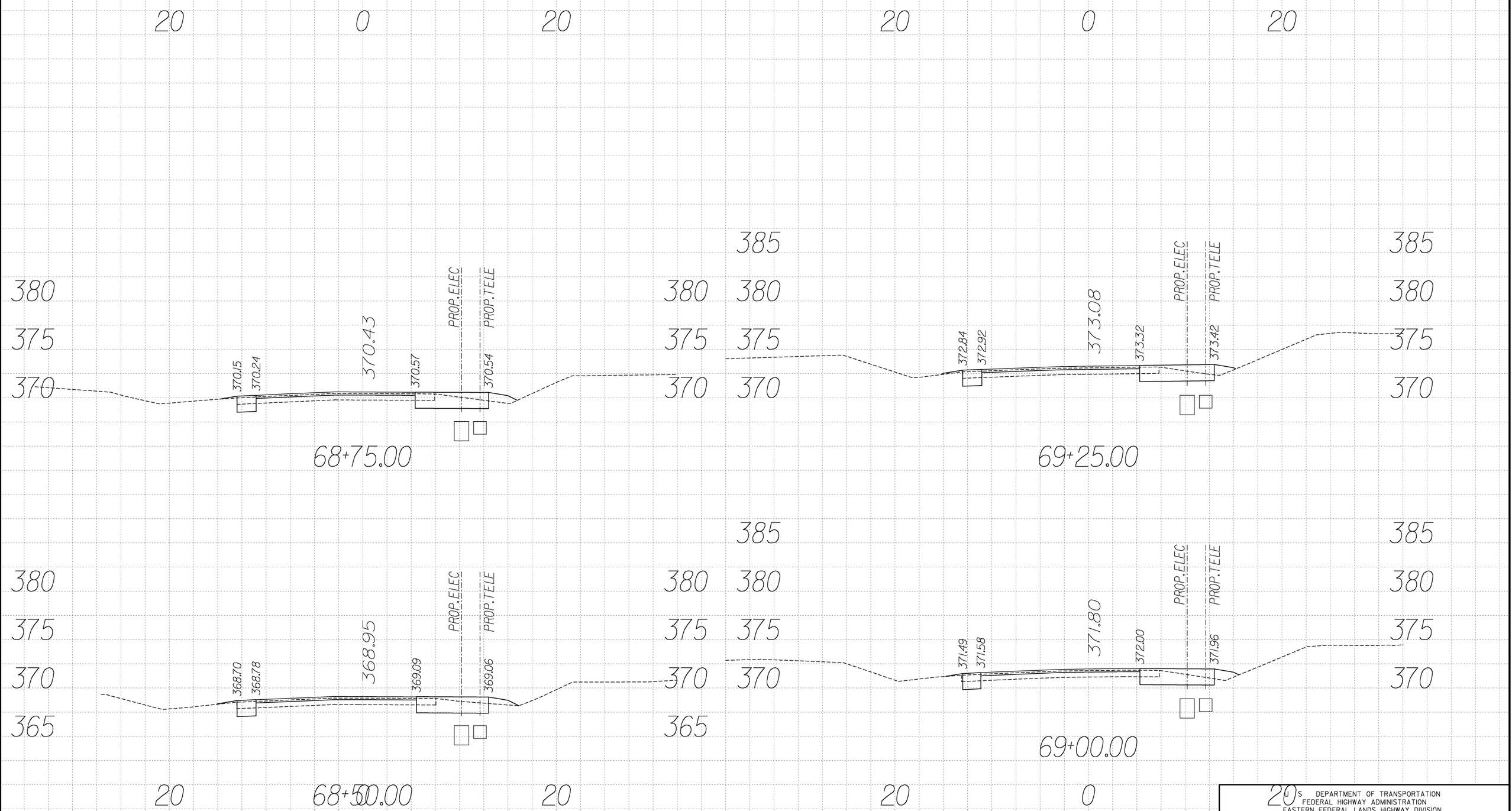

U.S. DEPARTMENT OF TRANSPORTATION
FEDERAL HIGHWAY ADMINISTRATION
EASTERN FEDERAL LANDS HIGHWAY DIVISION
STERLING, VIRGINIA

C&O CANAL NATIONAL HISTORIC PARK
GREAT FALL ENTRANCE ROAD & PARKING LOTS

CROSS SECTIONS

Sta. 68+50 to 69+25

0 5 10
SCALE IN FEET

NPS NO.	REG	STATE	PROJECT	SHEET NO.
412 / 41911	NCR	MD	PRA-CHOH 102 (1)	T57

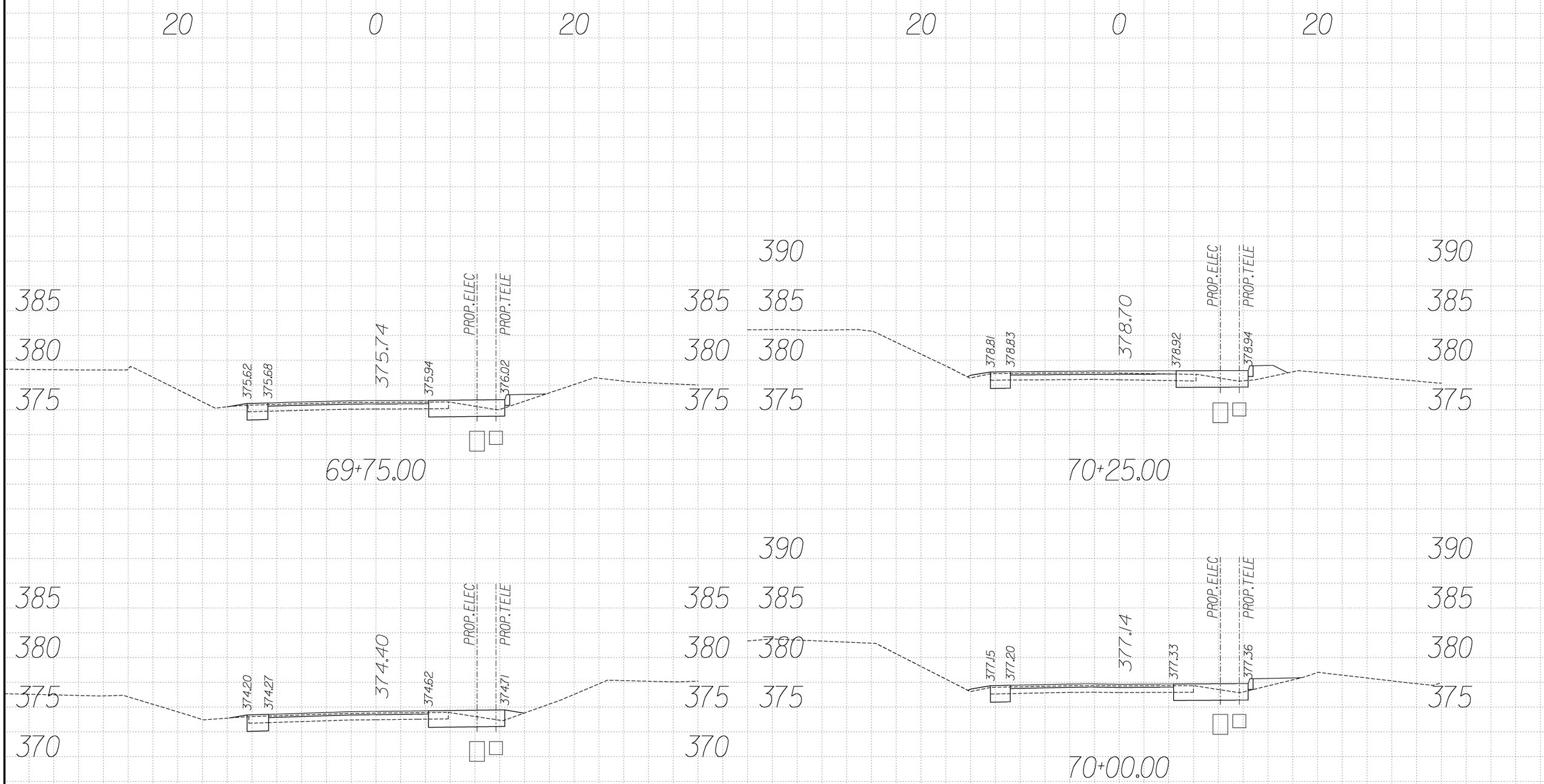

U.S. DEPARTMENT OF TRANSPORTATION
FEDERAL HIGHWAY ADMINISTRATION
EASTERN FEDERAL LANDS HIGHWAY DIVISION
STERLING, VIRGINIA

C&O CANAL NATIONAL HISTORIC PARK
GREAT FALL ENTRANCE ROAD & PARKING LOTS

CROSS SECTIONS
Sta. 69+50 to 70+25

0 5 10
SCALE IN FEET

NPS NO.	REG	STATE	PROJECT	SHEET NO.
412 / 41911	NCR	MD	PRA-CHOH 102 (1)	T58

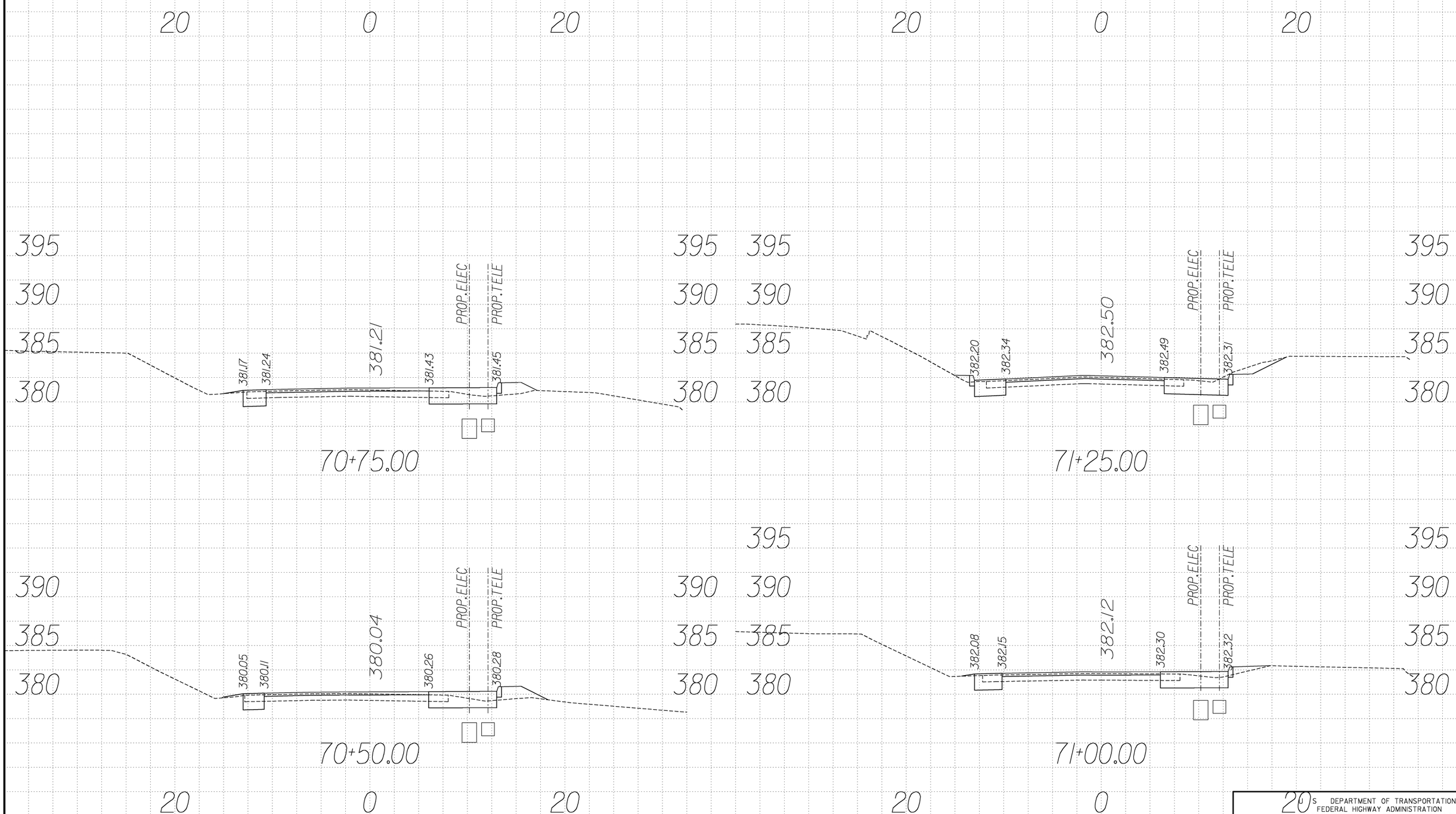

U.S. DEPARTMENT OF TRANSPORTATION
FEDERAL HIGHWAY ADMINISTRATION
EASTERN FEDERAL LANDS HIGHWAY DIVISION
STERLING, VIRGINIA

C&O CANAL NATIONAL HISTORIC PARK
GREAT FALL ENTRANCE ROAD & PARKING LOTS

CROSS SECTIONS
Sta. 70+50 to 71+25

0 5 10
SCALE IN FEET

NPS NO.	REG	STATE	PROJECT	SHEET NO.
412 / 41911	NCR	MD	PRA-CHOH 102 (1)	T59

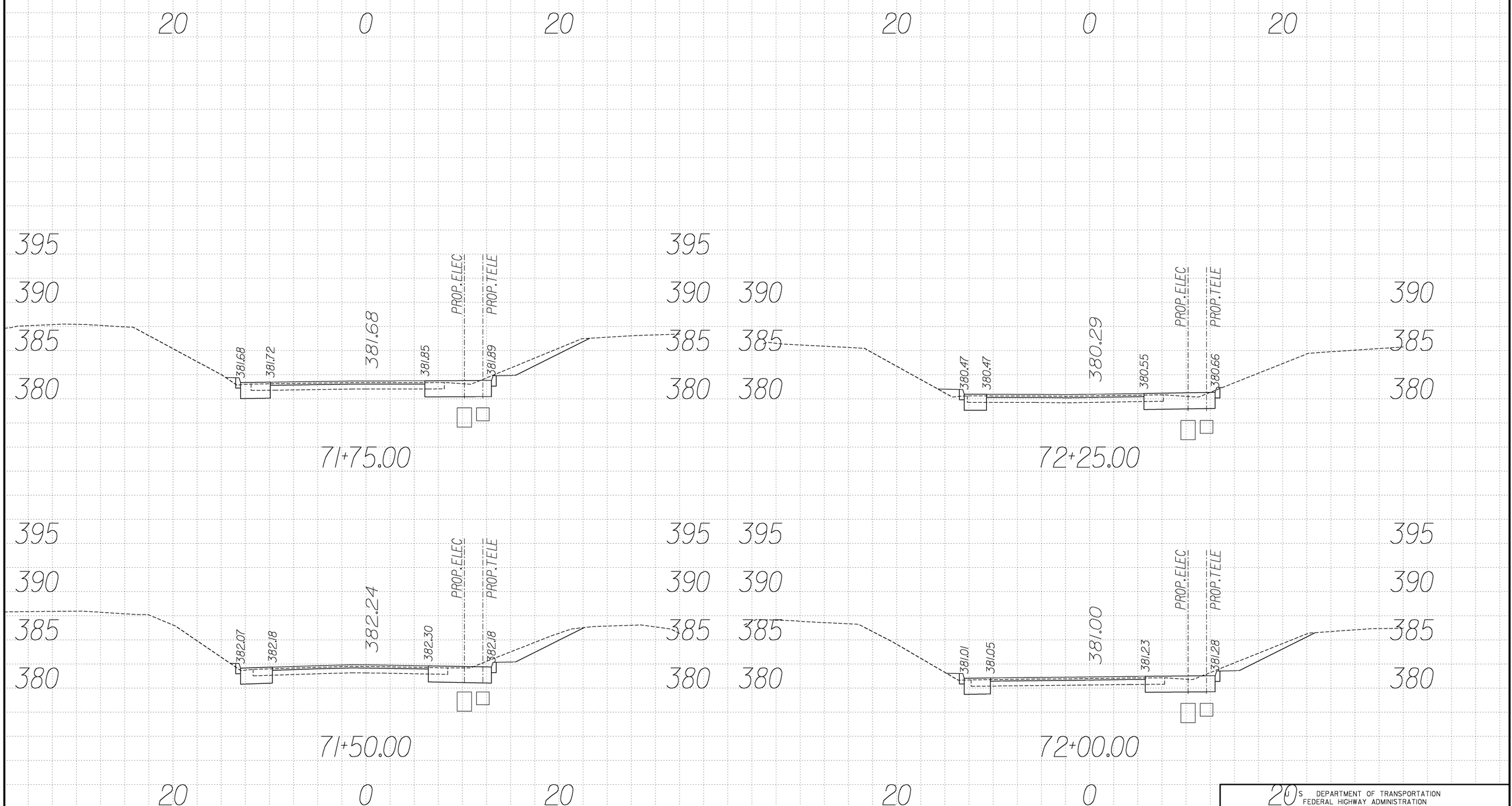

U.S. DEPARTMENT OF TRANSPORTATION
FEDERAL HIGHWAY ADMINISTRATION
EASTERN FEDERAL LANDS HIGHWAY DIVISION
STERLING, VIRGINIA

C&O CANAL NATIONAL HISTORIC PARK
GREAT FALL ENTRANCE ROAD & PARKING LOTS

CROSS SECTIONS
Sta. 71+50 to 72+25

0 5 10
SCALE IN FEET

NPS NO.	REG	STATE	PROJECT	SHEET NO.
412 / 41911	NCR	MD	PRA-CHOH 102 (1)	T60

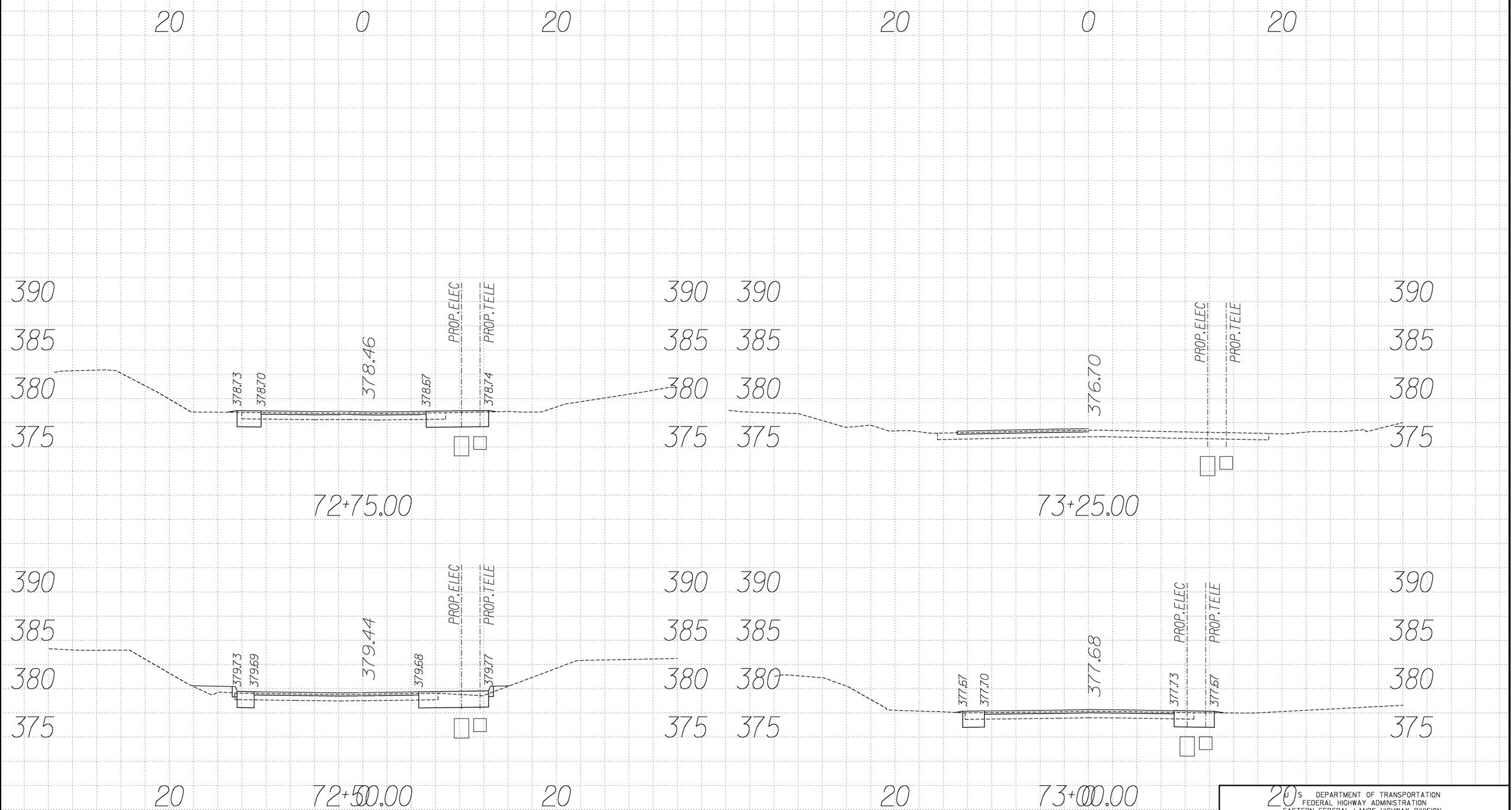

U.S. DEPARTMENT OF TRANSPORTATION
FEDERAL HIGHWAY ADMINISTRATION
EASTERN FEDERAL LANDS HIGHWAY DIVISION
STERLING, VIRGINIA

C&O CANAL NATIONAL HISTORIC PARK
GREAT FALL ENTRANCE ROAD & PARKING LOTS

CROSS SECTIONS

Sta. 72+50 to 73+25

0 5 10
SCALE IN FEET

REG	STATE	PROJECT	SHEET NO.
NCR	MD	PRA-CHOH 102 (1)	U1

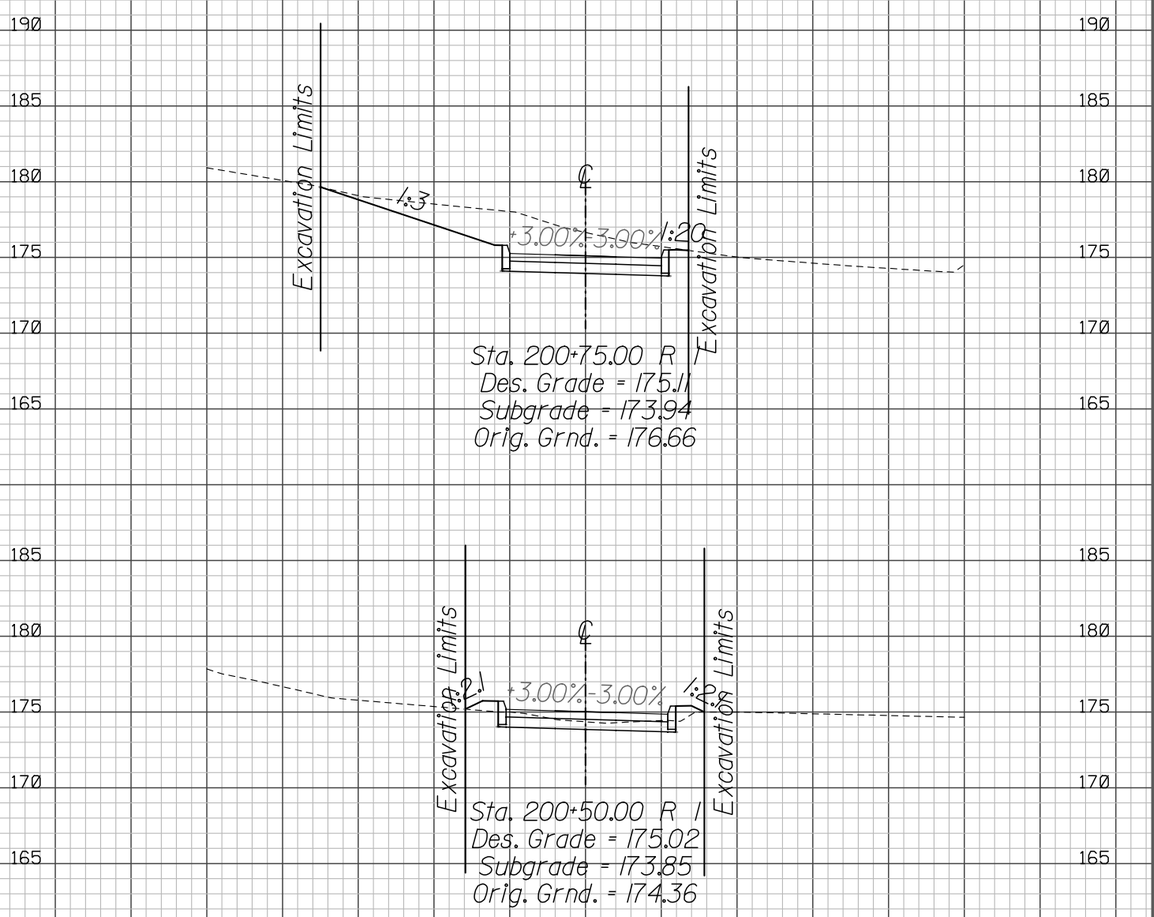

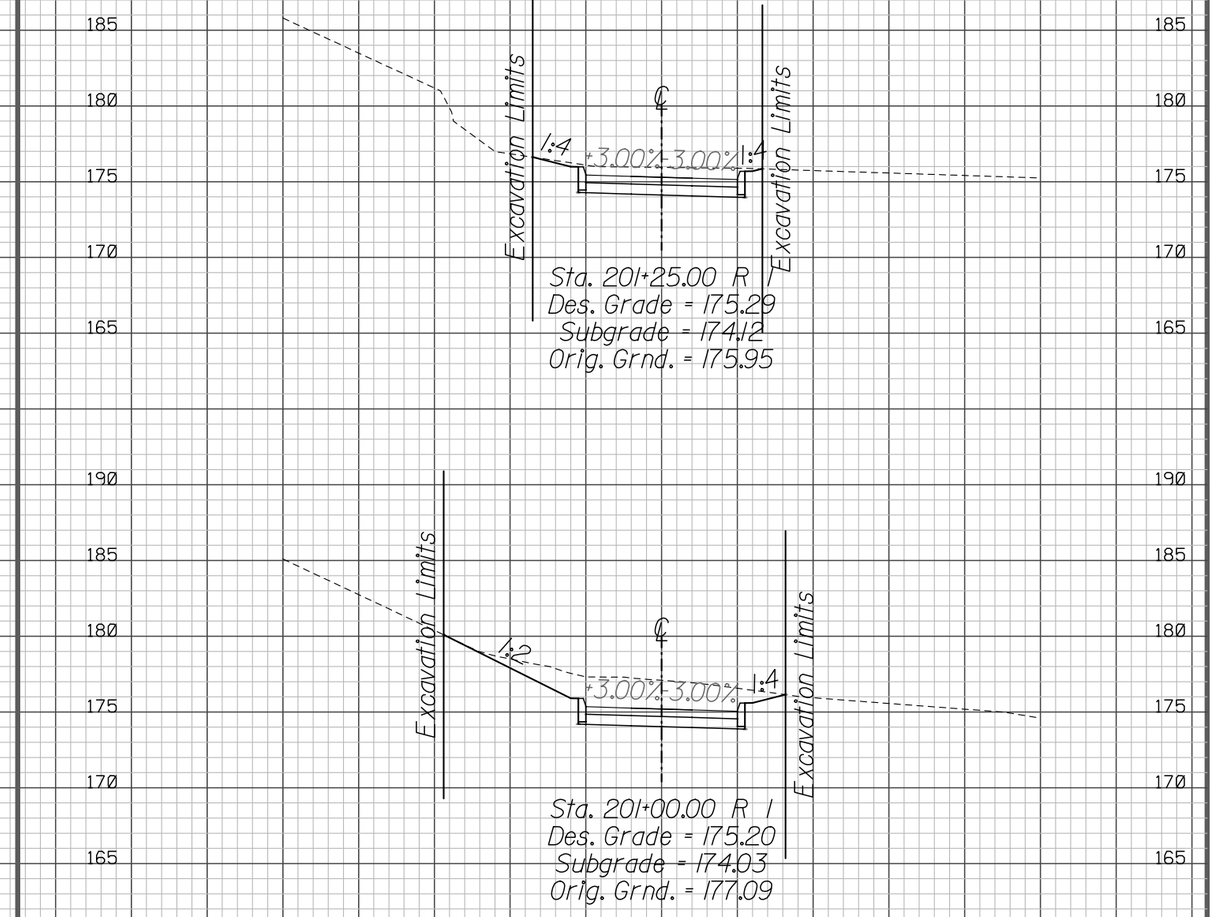

U.S. DEPARTMENT OF TRANSPORTATION
FEDERAL HIGHWAY ADMINISTRATION
EASTERN FEDERAL LANDS HIGHWAY DIVISION
STERLING, VIRGINIA

CHESAPEAKE & OHIO CANAL

CROSS SECTIONS

ACCESS ROAD

200+50.00 TO 201+25.00

7:26:37 AM\\Projects\choh\102\1\proj_dev\CADD\URS_CADD_Files_Updated\U01-choh\102\1_xss.dgn

6/5/2008

REG	STATE	PROJECT	SHEET NO.
NCR	MD	PRA-CHOH 102 (1)	U2

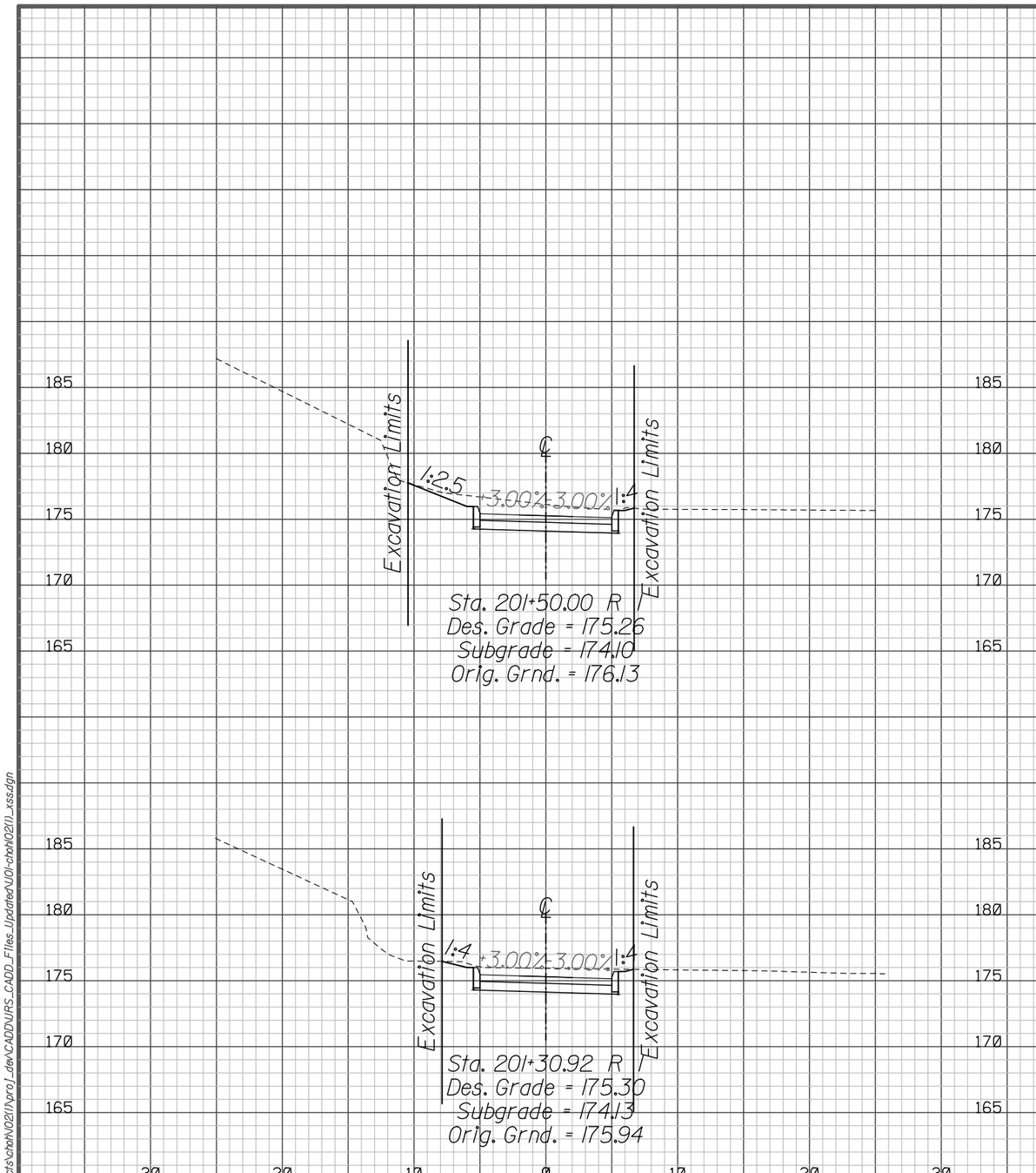

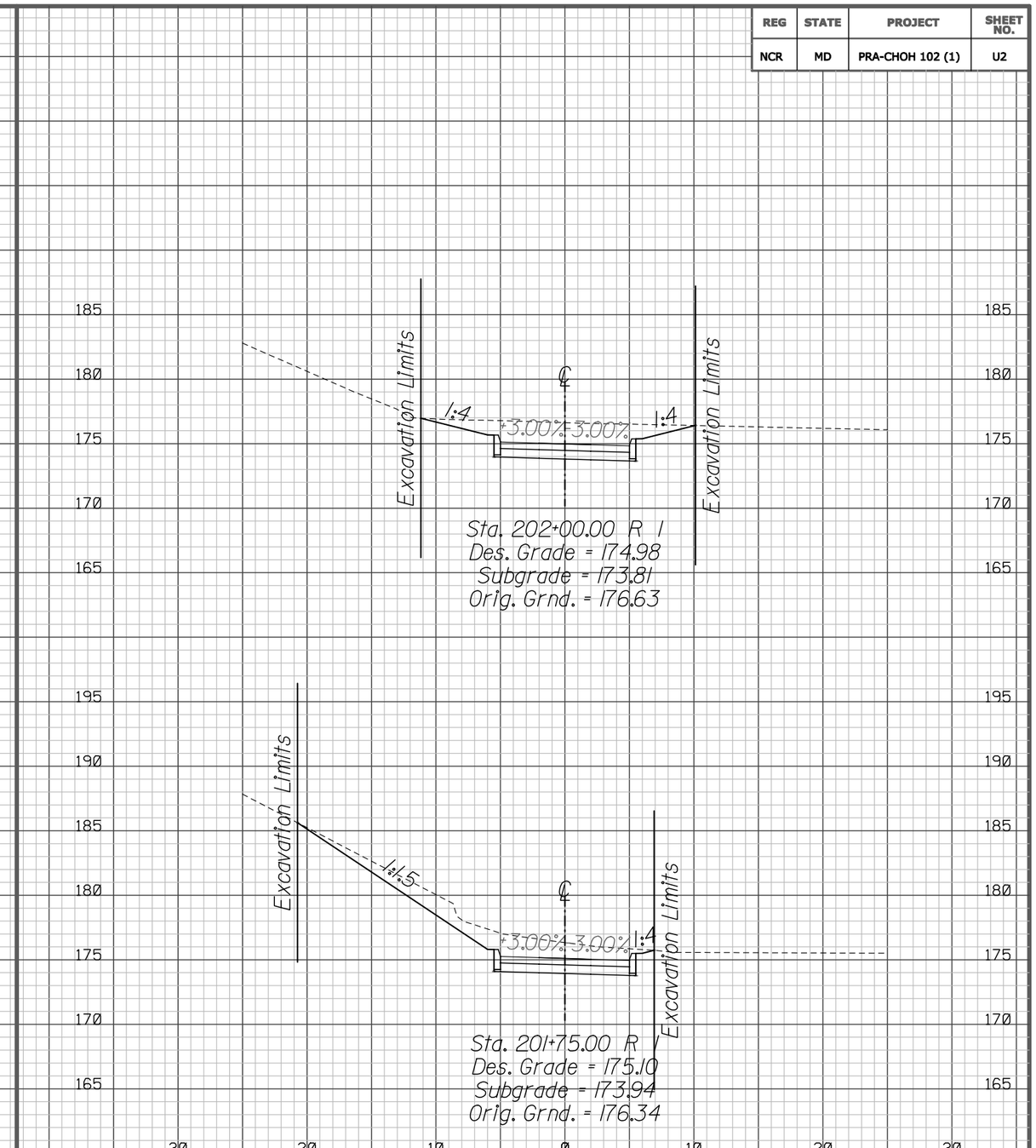

U.S. DEPARTMENT OF TRANSPORTATION
FEDERAL HIGHWAY ADMINISTRATION
EASTERN FEDERAL LANDS HIGHWAY DIVISION
STERLING, VIRGINIA

CHESAPEAKE & OHIO CANAL

CROSS SECTIONS

ACCESS ROAD

201+30.92 TO 202+00.00

6/5/2008 7:26:38 AM:\Projects\choh\U02\I\proj_dir\CADD\UR5_CADD_Files_Updated\U01-choh\U02\I_xss.dgn

REG	STATE	PROJECT	SHEET NO.
NCR	MD	PRA-CHOH 102 (1)	U3

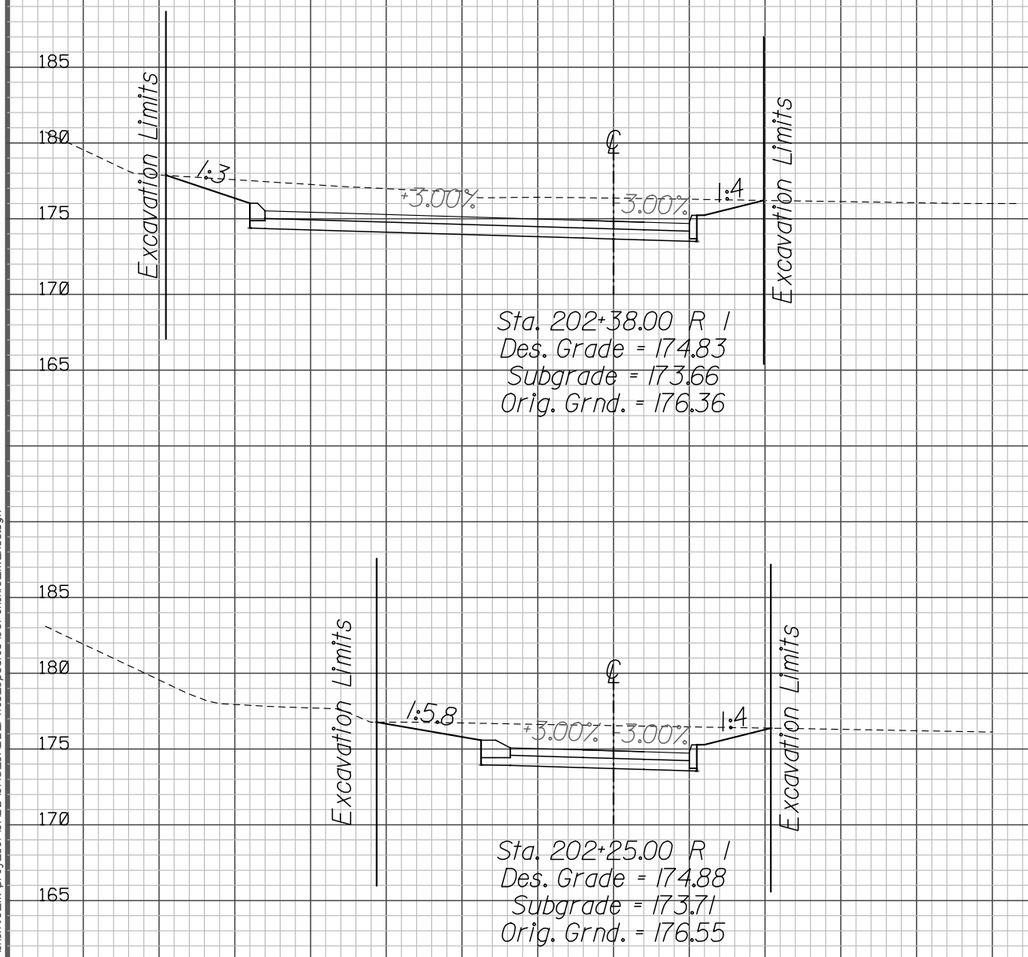

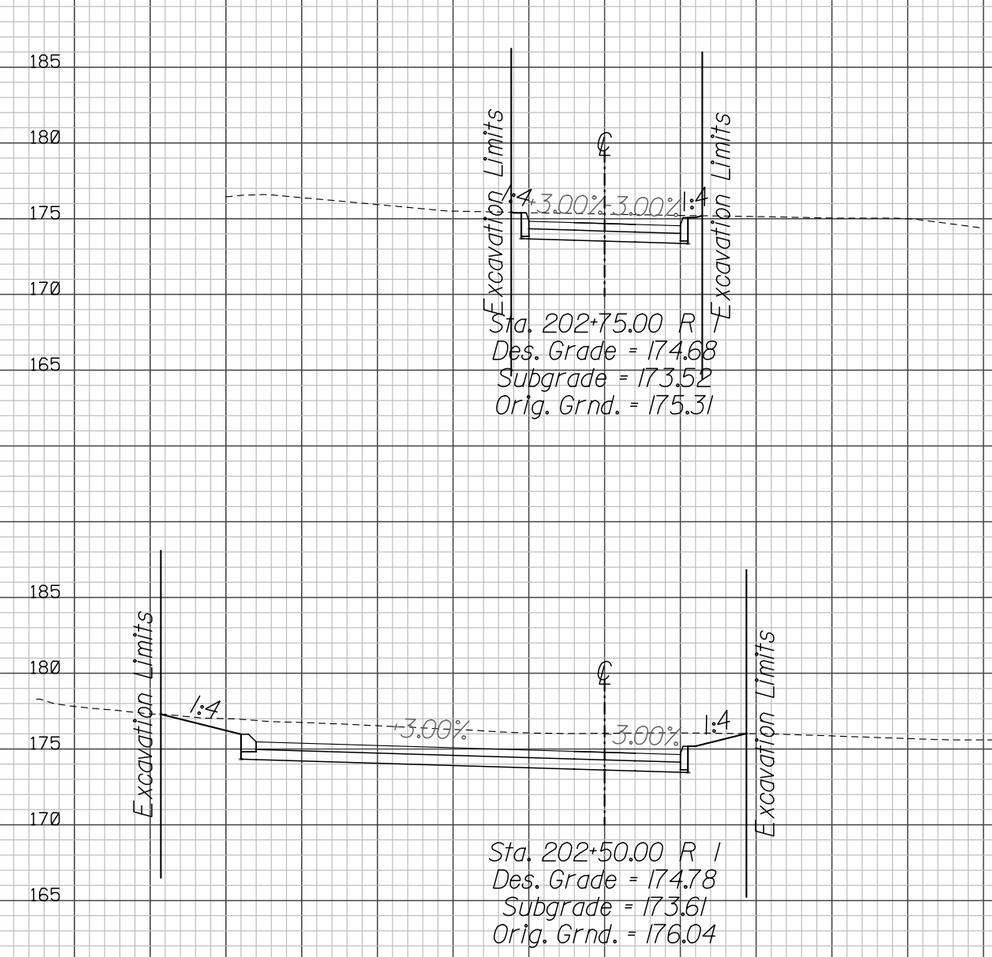

U.S. DEPARTMENT OF TRANSPORTATION
FEDERAL HIGHWAY ADMINISTRATION
EASTERN FEDERAL LANDS HIGHWAY DIVISION
STERLING, VIRGINIA

CHESAPEAKE & OHIO CANAL

CROSS SECTIONS

ACCESS ROAD

202+25.00 TO 202+75.00

6/5/2008 7:26:39 AM(A:\Projects\choh\N021\proj_dev\CADD\URS_CADD_Files_Updated\U01-choh\N021_xss.dgn

REG	STATE	PROJECT	SHEET NO.
NCR	MD	PRA-CHOH 102 (1)	U4

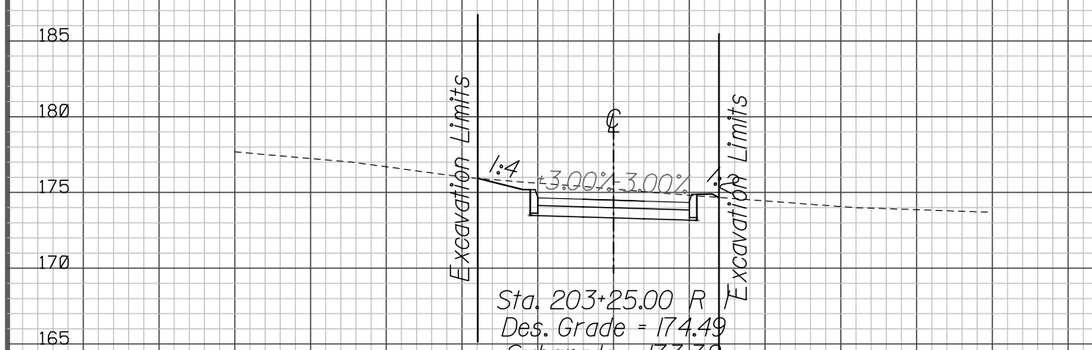

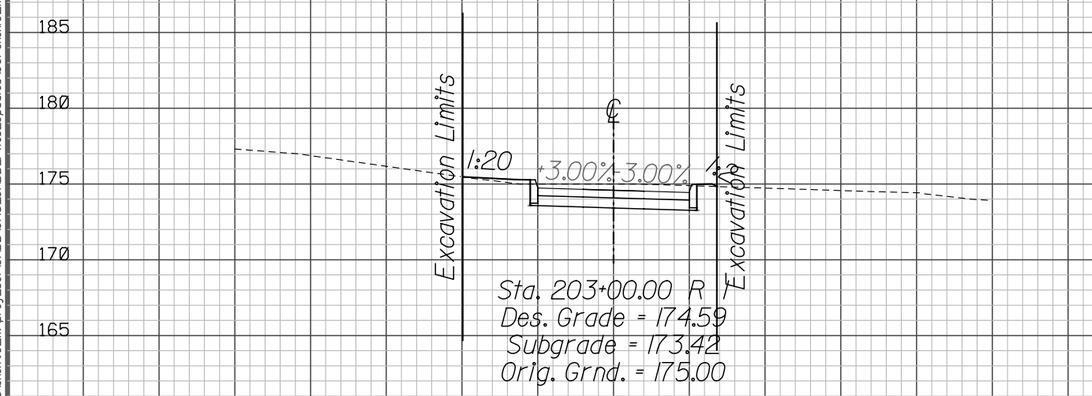

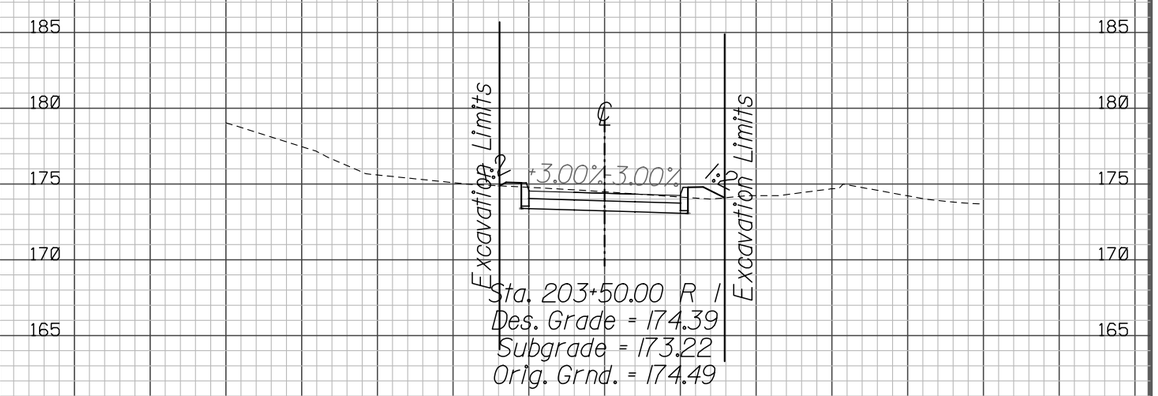

U.S. DEPARTMENT OF TRANSPORTATION
FEDERAL HIGHWAY ADMINISTRATION
EASTERN FEDERAL LANDS HIGHWAY DIVISION
STERLING, VIRGINIA

CHESAPEAKE & OHIO CANAL

CROSS SECTIONS

ACCESS ROAD

203+00.00 TO 203+50.00

6/5/2008 7:26:40 AM\:\Projects\choh\102\1\proj_dir\CADD\RS_CADD_Files_Updated\U01-choh102i1_xss.dgn