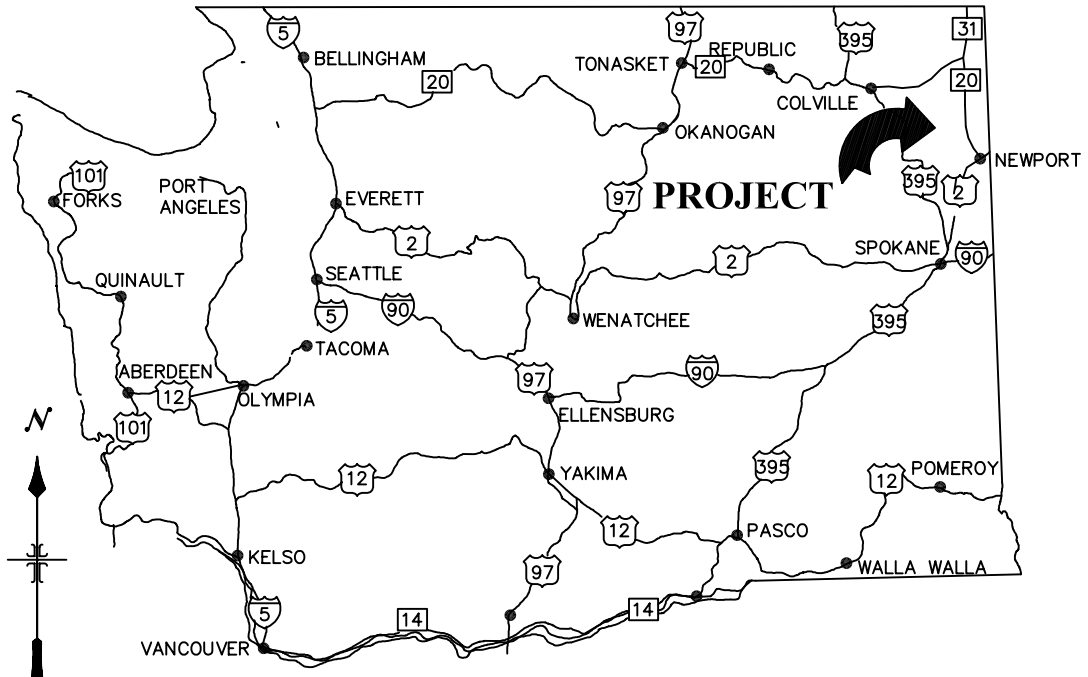

KEY MAP OF WASHINGTON SHOWING LOCATION OF PROJECT

UNITED STATES DEPARTMENT OF AGRICULTURE

FOREST SERVICE – REGION SIX

COLVILLE NATIONAL FOREST

NEWPORT RANGER DISTRICT

DRAWINGS FOR PROPOSED

RUBY CREEK CULVERT REPLACEMENT

INDEX TO SHEETS

NO.	DESCRIPTION
1	TITLE SHEET
2	VICINITY MAP
3	ESTIMATE OF QUANTITIES
4	TYPICAL ROADWAY SECTION
5	RUBY CREEK ROAD PLAN AND PROFILE
6	STREAM DIVERSION AND WORK AREA EXCAVATION DETAILS
7	BYPASS ROAD PLAN AND PROFILE
8	RIPRAP AND STREAMBED RECONSTRUCTION DETAILS

RECONSTRUCTION MILES 0.08

ROAD NUMBER	LENGTH mi	RECONST CONST	SHEET NUMBER	DESIGN VEHICLE	CRITICAL VEHICLE
CO. RD. 2489	0.08	RECONST	5-8	LOGTRUCK	LOWBOY

CONTRACT PACKAGE BY:

B. BAILEY **11-22-08**

NAME DATE

PEER REVIEWED BY:

NAME DATE

DISTRICT RANGER:

NAME DATE

FOREST ENGINEER:

NAME DATE

VICINITY MAP

SCALE:

0 1/2 MILE 1 MILE

LEGEND

● 1 = PROJECT LOCATION AT MP 7.0 ON CO. RD. 2489

MATERIAL SOURCES

▲ A = RUBY QUARRY, WEIR ROCK AND RIPRAP SOURCE

CONSTRUCTION SIGNS

◆ = TRUCKS 36" X 36"

△ = CONSTRUCTION AHEAD 36" X 36"

➡ = ROAD DETOUR SIGN M4-10, 18" X 48" 1 LEFT, 1 RIGHT

▨ = ROAD CLOSURE BARRICADE, TYPE III, WITH "ROAD CLOSED" SIGN, 30"X18", GOV'T SUPPLIED AND CONTRACTOR INSTALLED AND MAINTAINED.

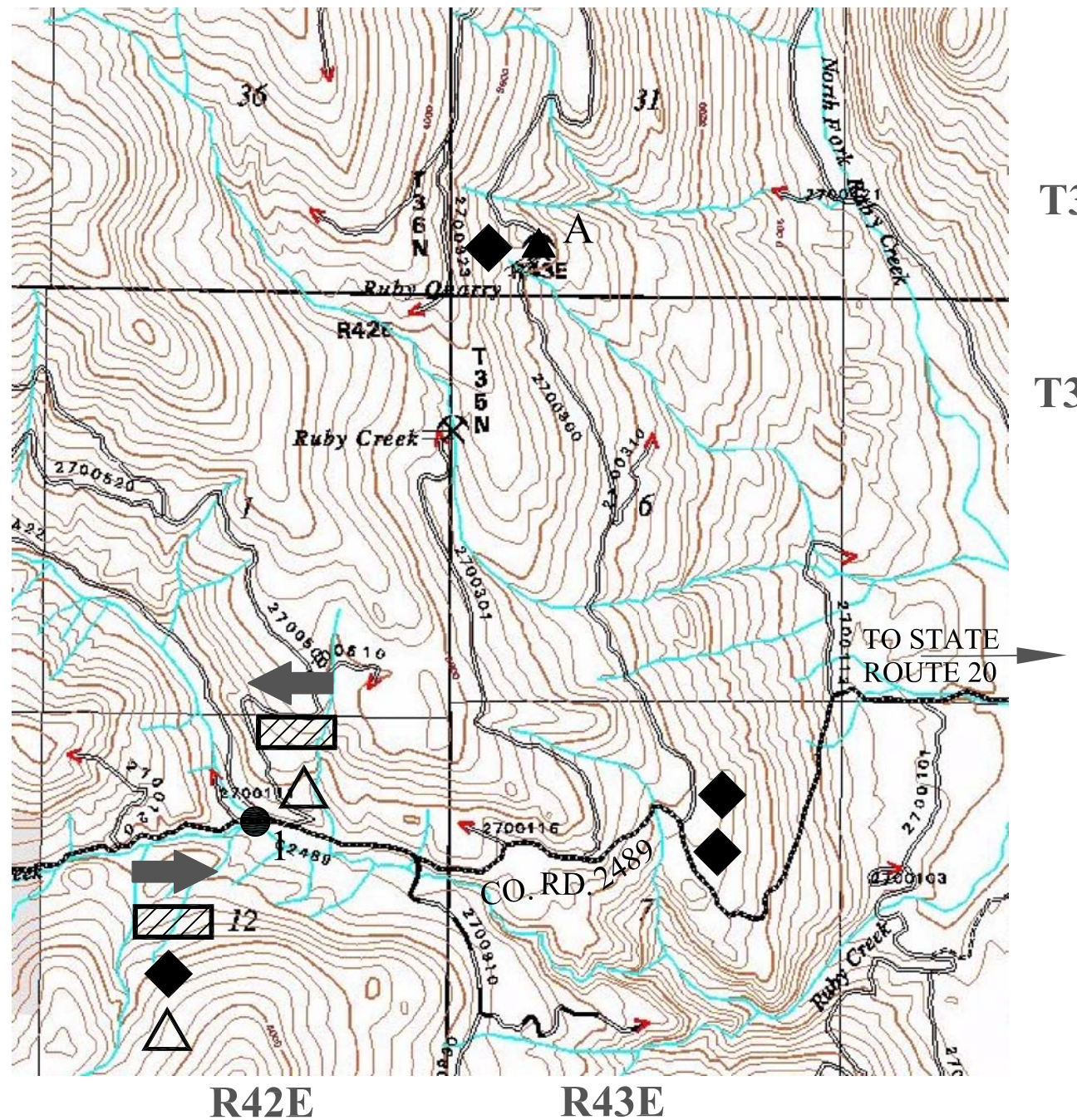

NOTE:

1) **PLACE CONSTRUCTION SIGNS AT LOCATIONS STAKED BY THE CO.**
2) **DEVELOPMENT LIMITS FOR THE RUBY QUARRY ARE THE EXISTING QUARRY DEVELOPMENT AREA, INCLUDING STOCKPILE AREAS. MAINTAIN PIT SIDES IN A SAFE CONFIGURATION WITH NO OVERHANGING SLOPES.**
3) **CLEARING LIMITS FOR THE PROJECT SITE BORROW SOURCE WILL BE MARKED IN GLO-PINK FLAGGING BY THE CO.**
4) **DISPOSE OF UNSUITABLE EXCAVATION IN THE PROJECT SITE BORROW SOURCE.**

ITEM NUMBER	DESCRIPTION	PAY UNIT	ESTIMATED QUANTITY	REMARKS
15101	MOBILIZATION	LUMP SUM	ALL	
15702	SILT FENCE	LINEAR FEET	40	FOR SEDIMENT BASIN
15723	INSTALL AND REMOVE DIVERSION CULVERT	LINEAR FEET	122	
15724	CONSTRUCT AND REMOVE PLASTIC LINED DIVERSION TRENCH	LINEAR FEET	45	
20101	CLEARING AND GRUBBING	ACRE	0.64 *	DISPOSAL METHOD L, EXCEPT PROJECT SITE BORROW SOURCE, METHOD F
20301	REMOVAL OF CULVERT	EACH	2	DISPOSAL METHOD A, INCLUDES BYPASS ROAD CULVERT REMOVAL
20491	ROADWAY EXCAVATION, COMPACTION METHOD B	CUBIC YARD	2836 *	550 CY BYPASS ROAD, 670 CY TOTAL FROM BORROW SOURCE
25101A	PLACED RIPRAP, CLASS 2	CUBIC YARD	50 *	CULVERT OUTLET RIPRAP
25101B	PLACED RIPRAP, CLASS 4a	CUBIC YARD	85 *	CULVERT INLET RIPRAP
32235	PLACE CONSERVED AGGREGATE SURFACING, COMPACTION METHOD B	CUBIC YARD	113 *	
60265A	18 INCH CORRUGATED STEEL PIPE, 0.064 INCH THICKNESS	LINEAR FOOT	52	BYPASS ROAD CULVERT, COMPACTION METHOD A
60265B	144 INCH CORRUGATED STEEL PIPE, 0.138 INCH THICKNESS	LINEAR FOOT	66	COMPACTION METHOD C
62501	SEEDING, DRY METHOD	ACRE	1.0 *	
63535	TEMPORARY TRAFFIC CONTROL – SIGNS AND BARRICADES	EACH	10	
64851A	PLACE WEIR ROCK, WR5	EACH	11	WEIR ROCK AT WEIR INSIDE CULVERT
64851B	PLACE WEIR ROCK, WR7	EACH	50	WEIR ROCK AT CULVERT OUTLET
64852	PLACED MANUFACTURED STREAMBED MATERIAL	CUBIC YARD	120	COMMERCIAL SOURCE
64853	GRAVEL EQUIPMENT RUNNING SURFACE	CUBIC YARD	40 *	COMMERCIAL SOURCE

* CONTRACT QUANTITY

U.S. DEPARTMENT OF AGRICULTURE
FOREST SERVICE
THE PACIFIC NORHTWEST REGION — COLVILLE NATIONAL FOREST

FOREST ENGINEER
DIST. RANGER
FOREST SUPV

DRAWN BB DATE: 10-05-08
DESIGNED DATE:
CHECKED DATE:
SUBMITTED DATE:

ESTIMATE OF QUANTITIES

SHEET **3 OF 8**

SHEET NO.	TOTAL SHEETS
4	8

SLOPE RATIOS – VERT:HORIZ

TYPICAL ROADWAY SECTION

(NOT TO SCALE)

ROAD STRUCTURE DETAILS

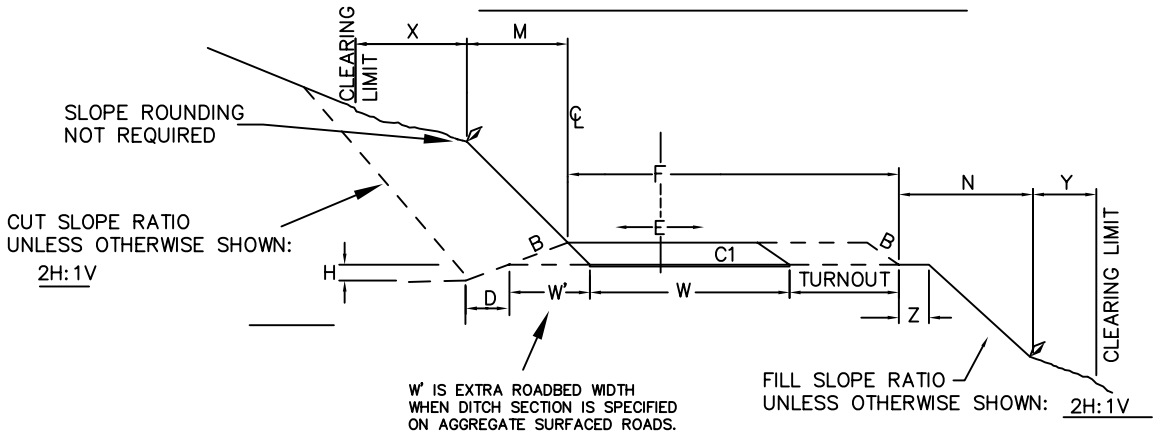

FOOTNOTES

1/ WIDTH VARIES AS SHOWN ON THE DRAWINGS.

2/ AT LOCATIONS SHOWN ON THE DRAWINGS.

3/ DEPTHS AS SHOWN ON THE PLANS

4/ AS SHOWN ON THE PLANS

5/ FINISH FOR SURFACED ROADS

6/ SEED ALL DISTURBED AREAS (INCLUDING BORROW SOURCES) WITHIN THE CLEARING LIMITS

7/ AS EXISTS

8/ SEED ALL DISTURBED AREAS (INCLUDING BORROW SOURCES) WITHIN THE CLEARING LIMITS AND OUTSIDE THE ROADBED

GENERAL NOTES

1. CUT AND FILL SLOPE RATIOS SHALL BE AS SPECIFIED ON THE STAKES.
2. TURNOUTS, CURVE WIDENING, & EXTRA WIDTH SHALL BE SURFACED TO SAME DEPTH AS THE TRAVELED WAY AND TO THE DIMENSIONS SPECIFIED IN THE DRAWINGS.
3. WHERE SHOWN ON DRAWINGS AS SLASH DISPOSAL METHOD (L), SLASH DEPTH SHALL BE 1' AND MATTED DOWN WITH CONSTRUCTION EQUIPMENT.
4. ALL DITCHES SHALL BE SLOPED TO DRAIN.
5. SEED BORROW SOURCES AFTER USE IS COMPLETE.
6. SEED THE BYPASS ROAD ONCE ROAD IS REMOVED.

ABBREVIATIONS

DD = Drain Dip
OSD = Outslope drain
TO = Turnout
CW = Curve Widening
TA = Turnaround
Rt = Right
Lt = Left
EOP = End of Project
TYP = tYpical

W/ = With
W/O = Without
Const = Construct
agg = aggregate
F.S. = Forest Service

ROAD NUMBER	STATION or KM POST	TO STATION or KM POST	GRADING: FINISH METHOD	CONSTRUCTION TOLERANCE	OUTSLOPE (O) INSLOPE (I) CROWN (C) 2 %	ROADBED WIDTH 1/ ft	DITCH 2/ DIMENSIONS ft		"J" TURN AROUND: TAPER WIDTH ft	LENGTH ft	WIDTH ft	TURNOUTS: WIDTH ft	LENGTH ft	TAPER ft	AGGREGATE: MIN TRAVEL WAY WIDTH 1/ ft	GRADATION	COMPACTED DEPTH inch	SLOPE RATIO	REVEGETATION: SEEDING, FERTILIZING and/or MULCHING AREA					CLEARING WHICHEVER IS GREATER: MINIMUM CLEARING WIDTH	BEYOND SLOPE STAKE	
					E	W	D	H	K	L	S	R	U	T	F	C1	C1	B							X	Y
CO. RD. 2489	0+000	4+15.91	5/	E	O	26	3'	1'							24'		7/	2H:1V	8/					4/	4'	4'
BYPASS ROAD	0+000	3+09.71	A	E	O	16													6/					4/	4'	4'

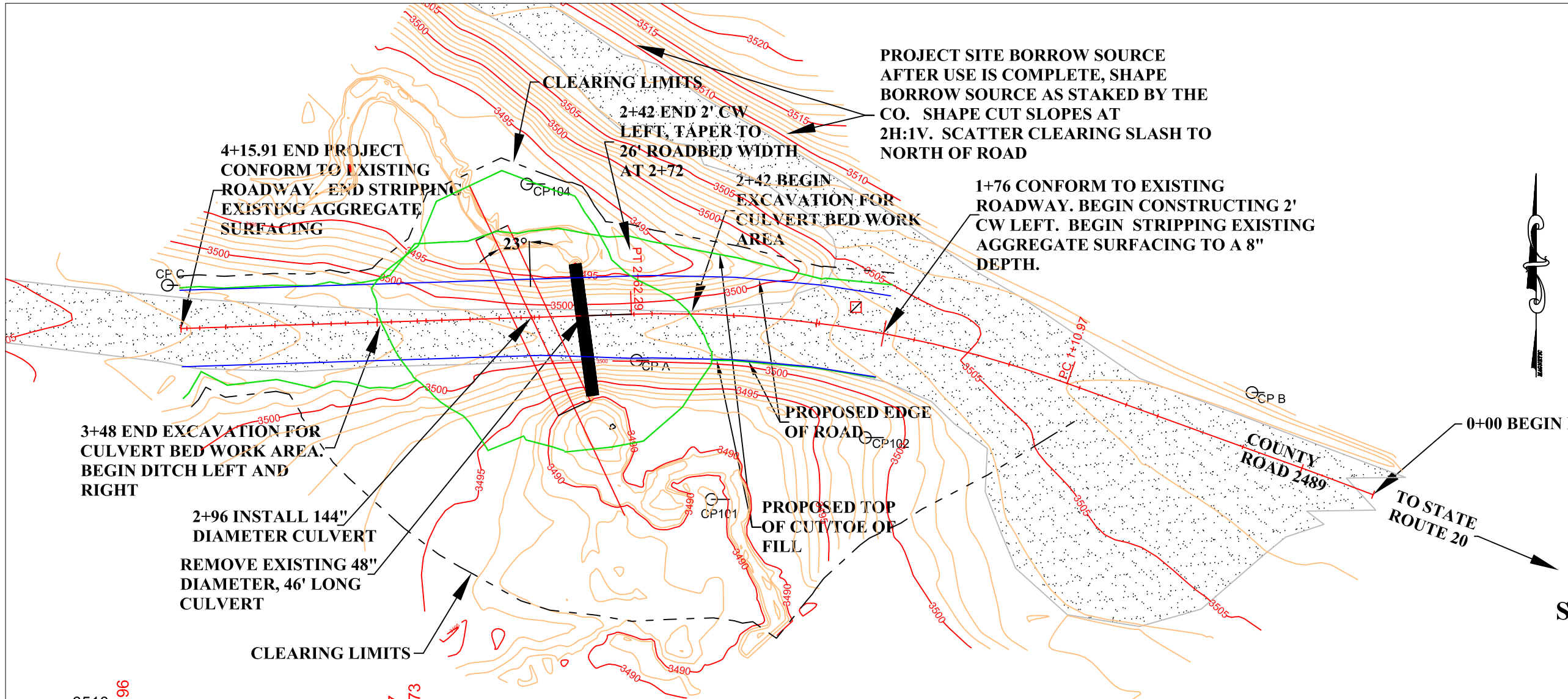

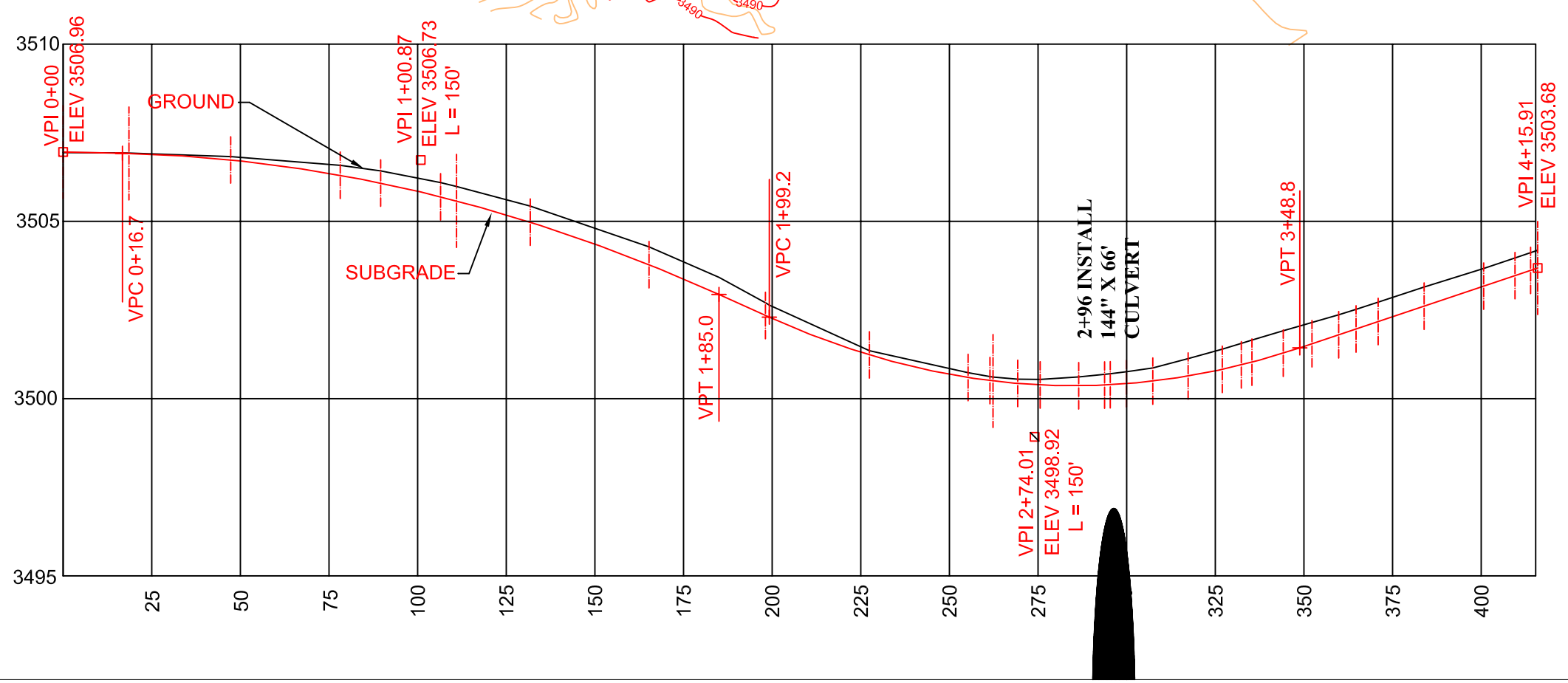

CENTERLINE INFORMATION

0+00 COORDINATES: 4954.1801N 10251.0748E

TANGENT 110.97', N 70° 08' 45"W

C1 DELTA =21° 40' 28", RADIUS = 400', LENGTH = 151.32'

TANGENT 153.62', S 88° 10' 48"W

SURVEY CONTROL POINTS

CONTROL POINT NO.	NORTHING	EASTING	ELEVATION	DESCRIPTION
CP A	5000.0000	10000.0000	3500.00	NAIL
CP B	4989.0040	10209.8155	3508.25	NAIL
CP C	5025.5721	9840.0801	3503.46	NAIL
CP 101	4952.5648	10025.5303	3491.22	REBAR
CP102	4973.6305	10078.0036	3498.02	REBAR
CP103	5125.3826	9940.7356	3509.88	REBAR
CP104	5060.0973	9962.6061	3493.31	REBAR

U.S. DEPARTMENT OF AGRICULTURE
FOREST SERVICE
THE PACIFIC NORHTWEST REGION — COLVILLE NATIONAL FOREST

FOREST ENGINEER
DIST. RANGER
FOREST SUPV

DRAWN BB DATE: 02/4/08
DESIGNED DATE:
CHECKED DATE:
SUBMITTED DATE:

RUBY CREEK ROAD PLAN AND PROFILE

SHEET 5 OF 8

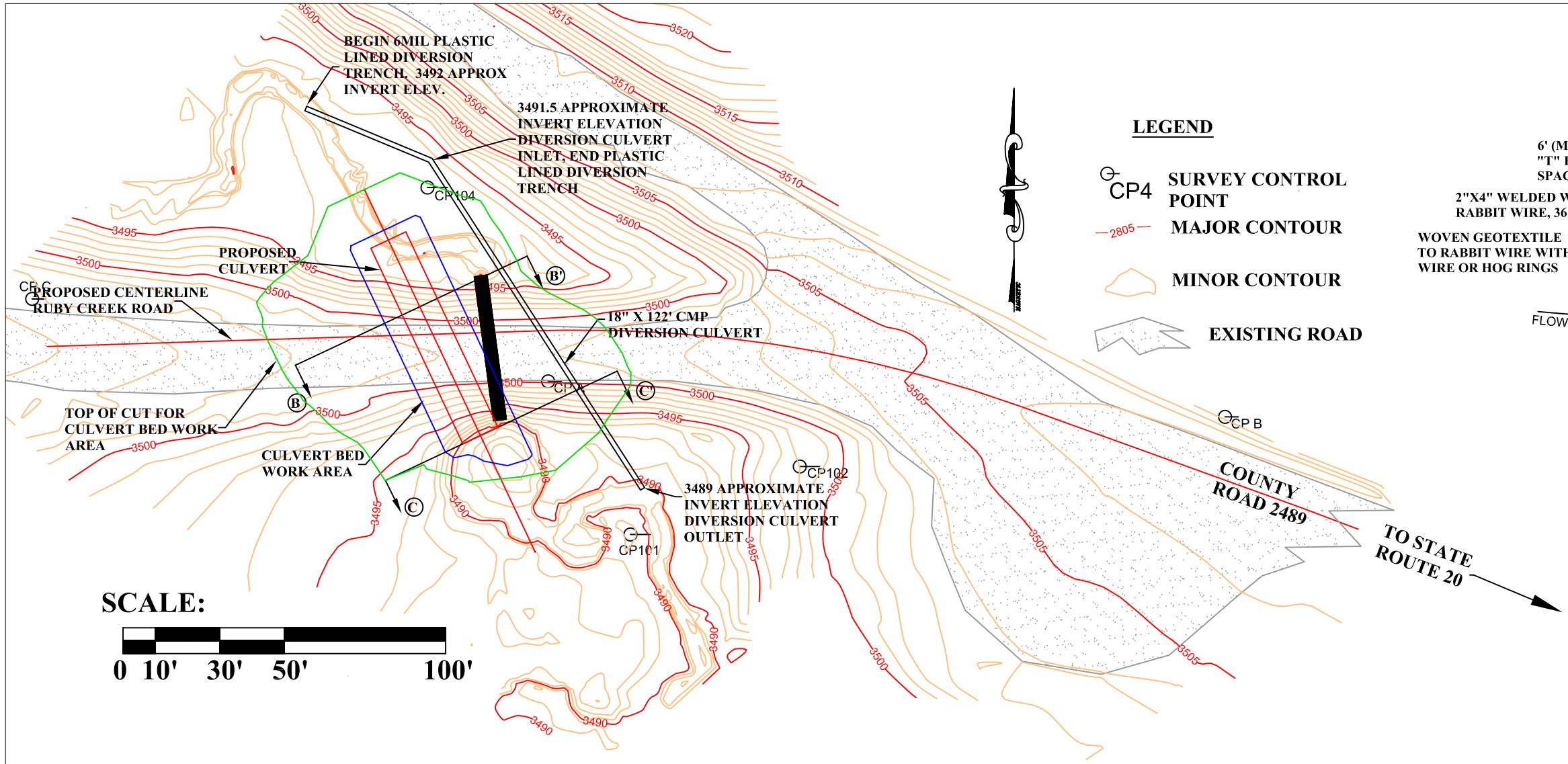

LEGEND

- CP4 SURVEY CONTROL POINT
- 2805 MAJOR CONTOUR
- MINOR CONTOUR
- EXISTING ROAD

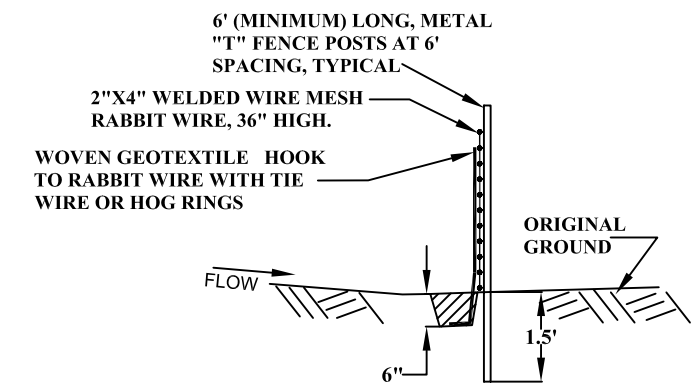

SEDIMENT BASIN SILT FENCE

NOT TO SCALE

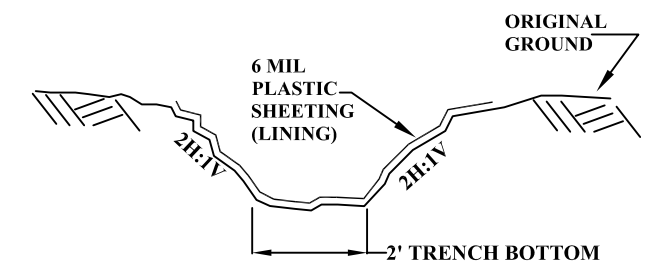

PLASTIC LINED DIVERSION TRENCH

NOT TO SCALE

NOTE: TIE OFF PLASTIC SHEET WITH ROPE OR TIE WIRE TO STAKES OR OTHER FASTENERS LOCATED ON THE TRENCH SIDES.

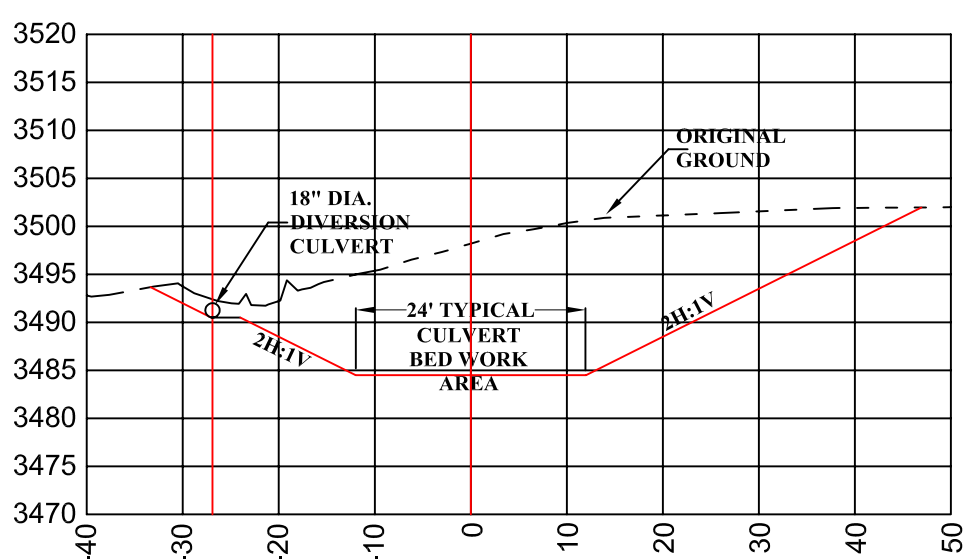

SECTION Ⓑ - Ⓑ'

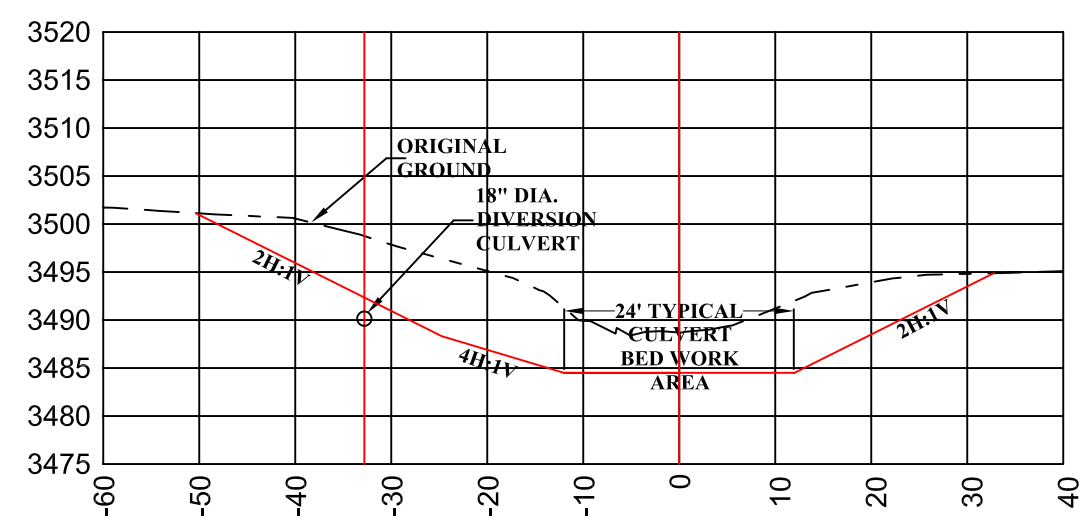

SECTION Ⓒ - Ⓒ'

U.S. DEPARTMENT OF AGRICULTURE FOREST SERVICE THE PACIFIC NORHTWEST REGION	COLVILLE NATIONAL FOREST	STREAM DIVERSION AND WORK AREA EXCAVATION DETAILS
FOREST ENGINEER	DRAWN BB DATE: 2-05-08	
DIST. RANGER	DESIGNED DATE:	
FOREST SUPV	CHECKED DATE:	SHEET
	SUBMITTED DATE:	SHEET 6 OF 8

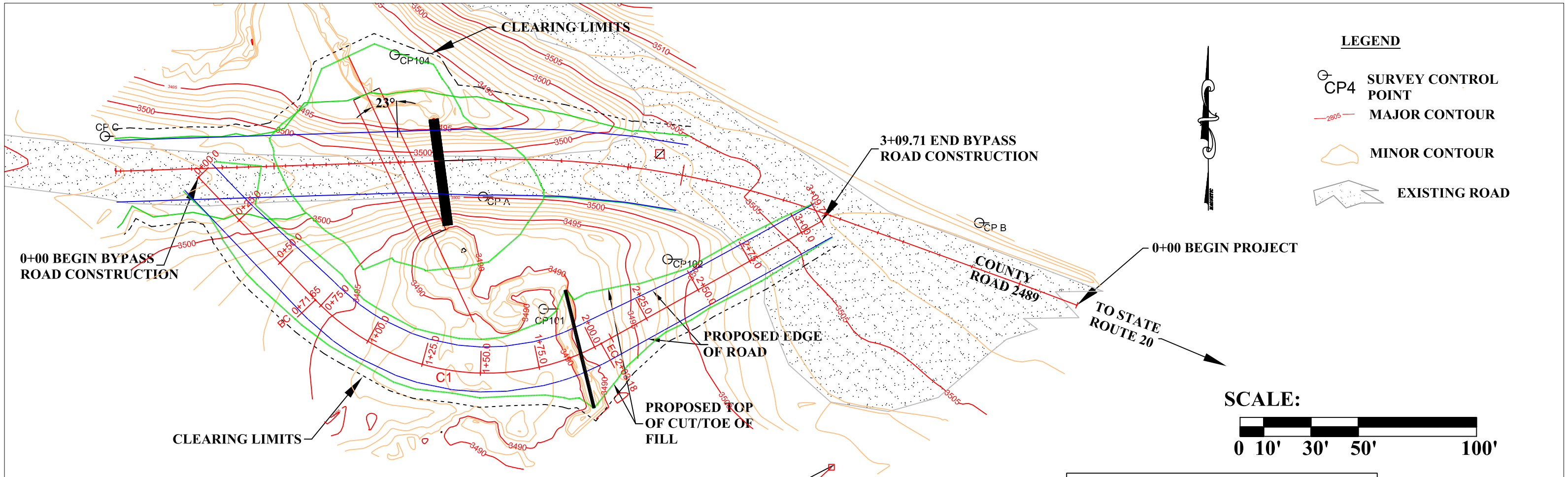

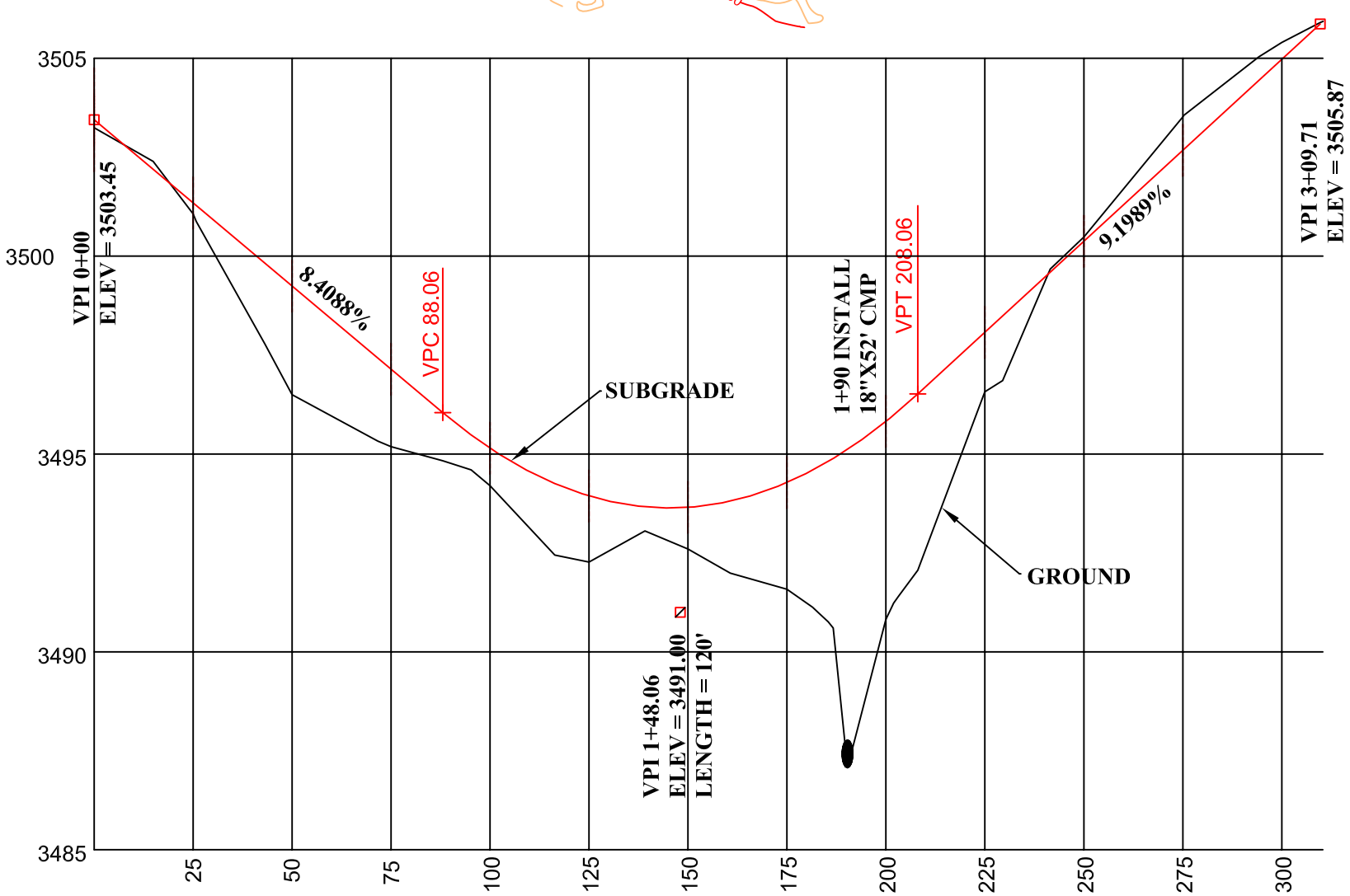

BYPASS ROAD CENTERLINE INFORMATION

0+00 COORDINATES: 5008.2950N 9879.6180E

TANGENT 71.65', S 43° 38' 34" E

C1 DELTA =75° 21' 38", RADIUS = 100', LENGTH = 131.53'

TANGENT 106.53', N 60° 59' 48"E

SURVEY CONTROL POINTS

CONTROL POINT NO.	NORTHING	EASTING	ELEVATION	DESCRIPTION
CP A	5000.0000	10000.0000	3500.00	NAIL
CP B	4989.0040	10209.8155	3508.25	NAIL
CP C	5025.5721	9840.0801	3503.46	NAIL
CP 101	4952.5648	10025.5303	3491.22	REBAR
CP102	4973.6305	10078.0036	3498.02	REBAR
CP103	5125.3826	9940.7356	3509.88	REBAR
CP104	5060.0973	9962.6061	3493.31	REBAR

U.S. DEPARTMENT OF AGRICULTURE
FOREST SERVICE
THE PACIFIC NORHTWEST REGION — COLVILLE NATIONAL FOREST

FOREST ENGINEER _____ DRAWN BB DATE: 02/4/08
DISTRICT RANGER _____ DESIGNED _____ DATE: _____
FOREST SUPV _____ CHECKED _____ DATE: _____
SUBMITTED _____ DATE: _____

BYPASS ROAD PLAN AND PROFILE

SHEET 7 OF 8

U.S. DEPARTMENT OF AGRICULTURE FOREST SERVICE THE PACIFIC NORHTWEST REGION	COLVILLE NATIONAL FOREST	RIPRAP AND STREAMBED RECONSTRUCTION DETAILS
FOREST ENGINEER	DRAWN BB DATE: 10-05-08	
DIST. RANGER	DESIGNED DATE:	SHEET 8 OF 8
FOREST SUPV	CHECKED DATE:	
	SUBMITTED DATE:	

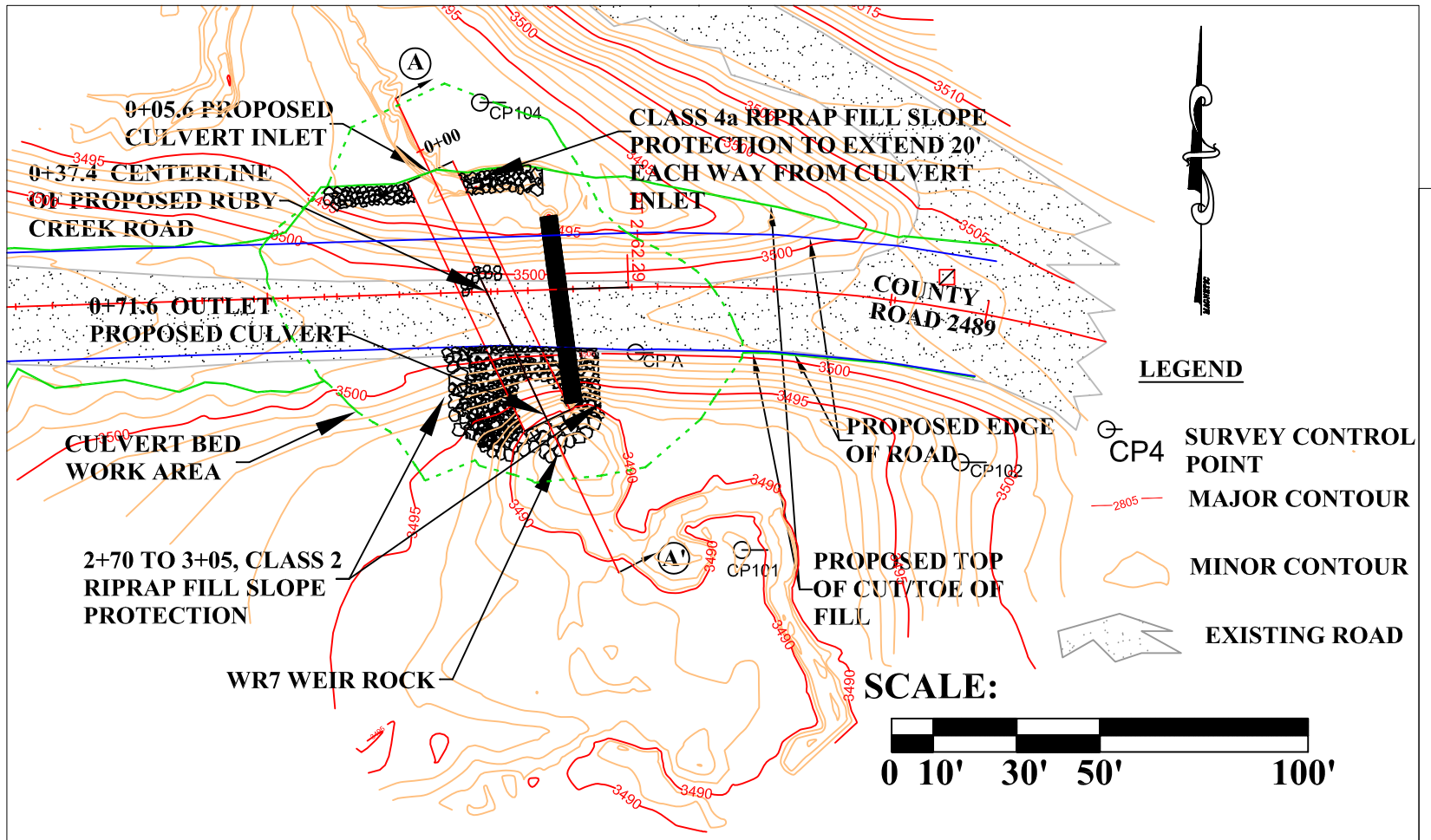

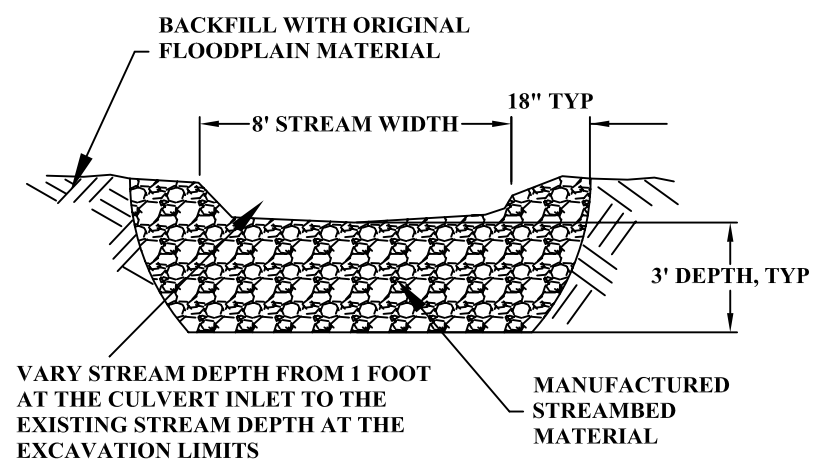

SECTION D - D'
SCALE: 1"=5'

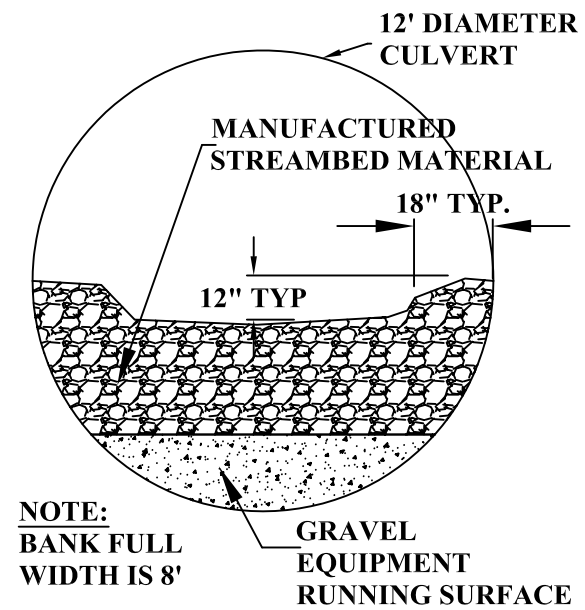

SECTION C - C'
SCALE: 1"=5'

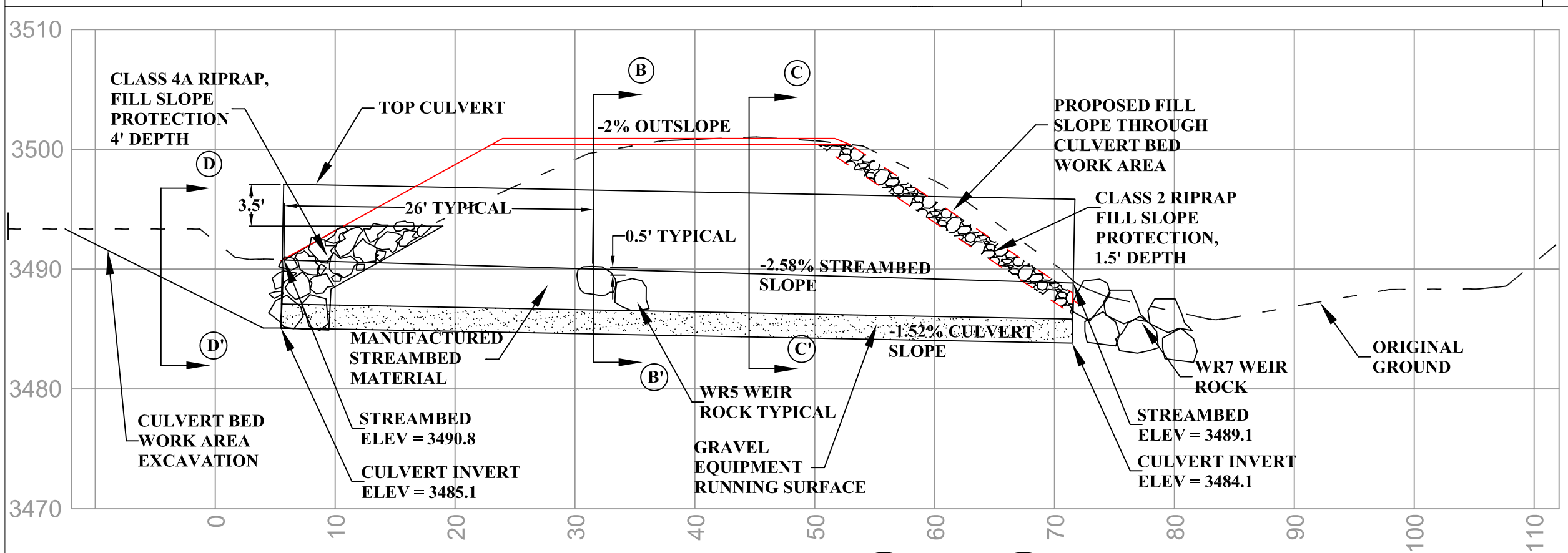

SECTION A - A'

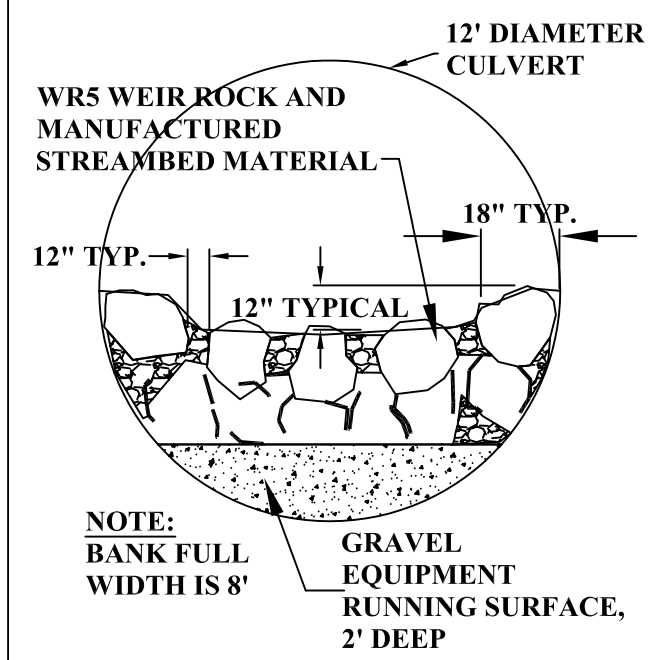

SECTION B - B'
SCALE: 1"=5'