NPS NO.	REG	STATE	PROJECT	SHEET NO.
306 / 41,918	SE	MS	PRA-VICK 10(2),12(2),19(1)	F10

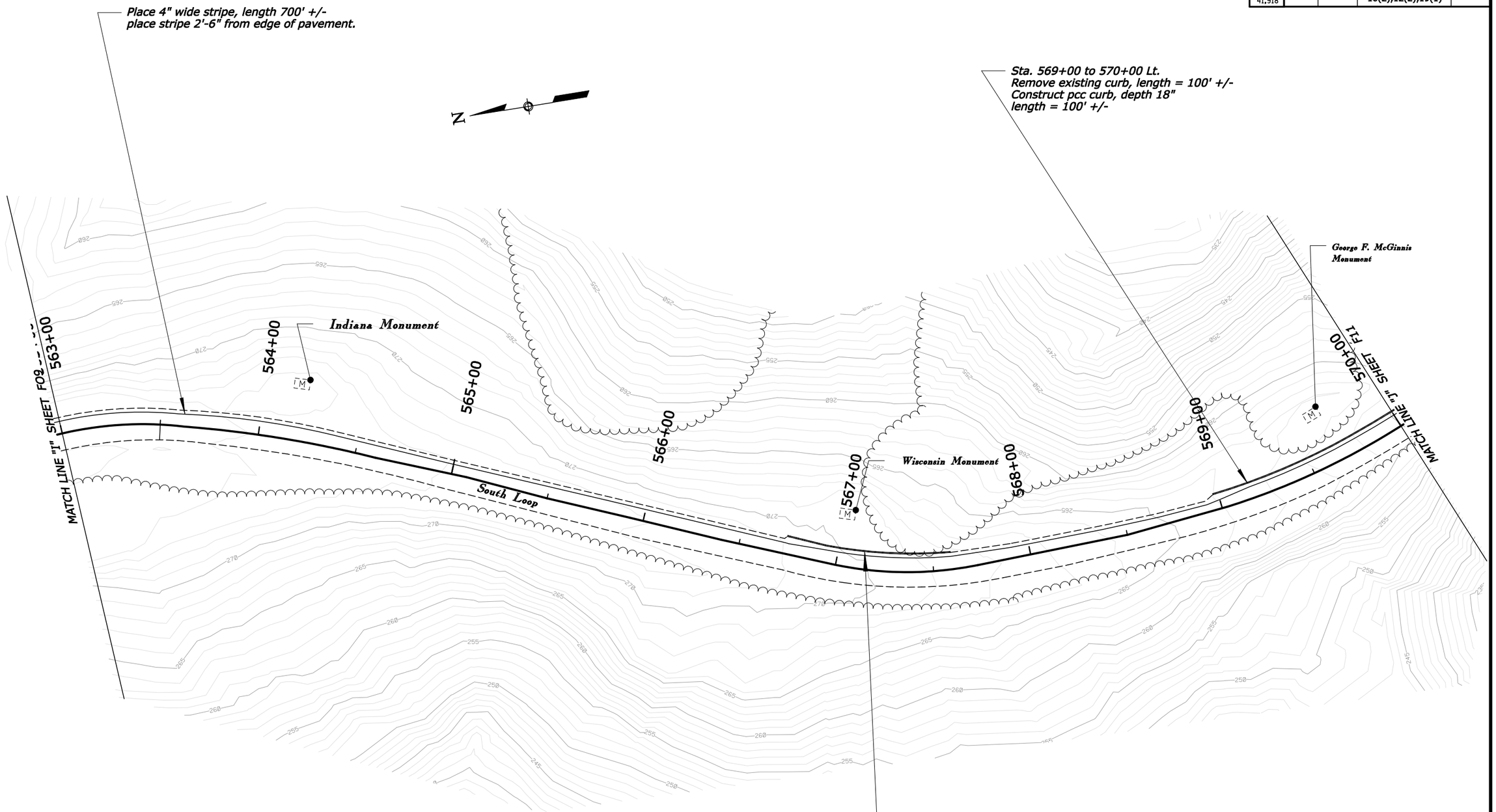

U.S. DEPARTMENT OF TRANSPORTATION
FEDERAL HIGHWAY ADMINISTRATION
EASTERN FEDERAL LANDS HIGHWAY DIVISION
STERLING, VIRGINIA

Vicksburg National Military Park

CONSTRUCTION PLAN

SOUTH LOOP

STA. 563+00 TO 570+00

0 25 50
SCALE IN FEET

5/20/2008 12:25:12 \\Server2008\projects\CM\LTECH\JOBS\CADD\07-008\Design\022208\F-VICK(SK)1-prp.dgn

NPS NO.	REG	STATE	PROJECT	SHEET NO.
306 / 41,918	SE	MS	PRA-VICK 10(2),12(2),19(1)	F11

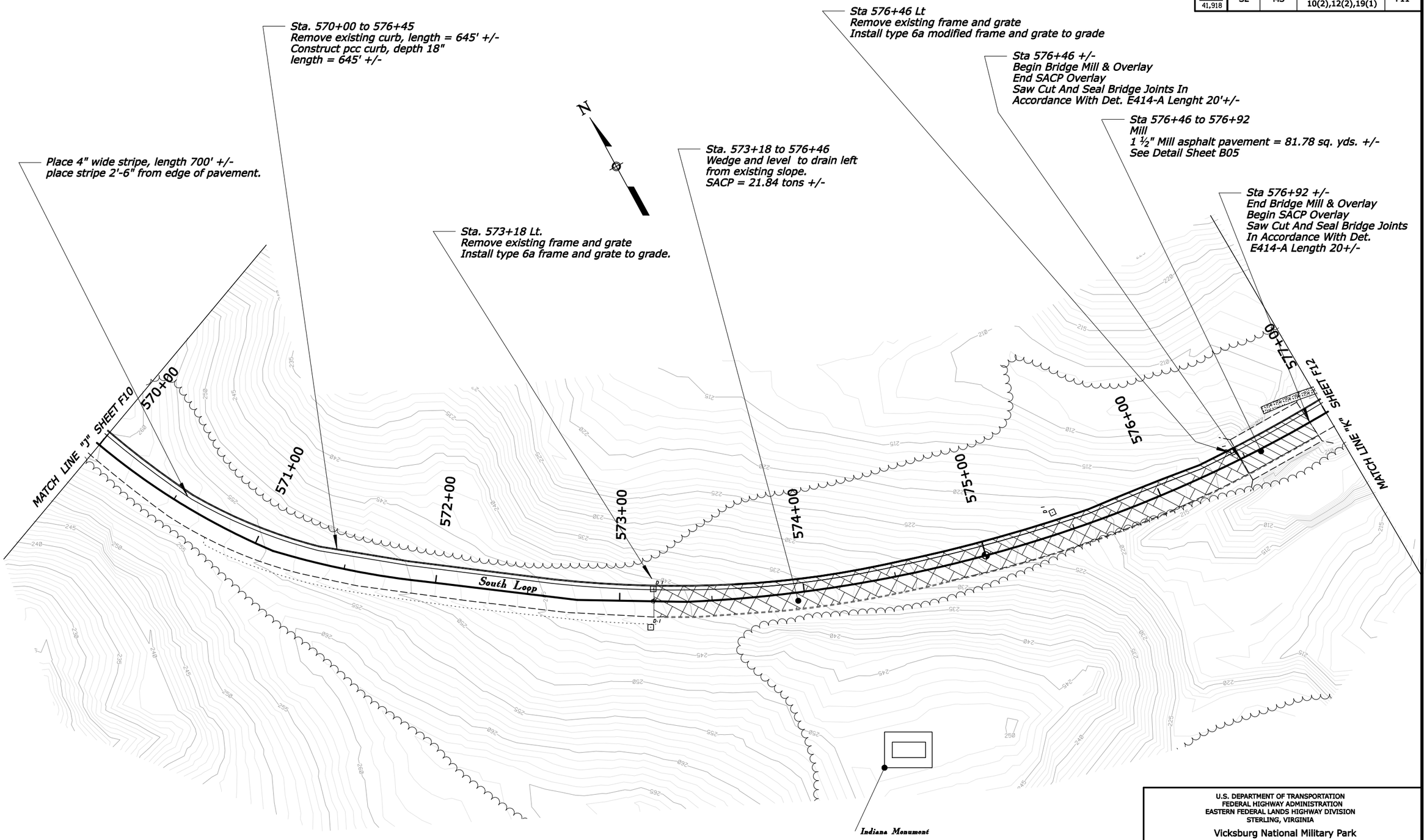

U.S. DEPARTMENT OF TRANSPORTATION
FEDERAL HIGHWAY ADMINISTRATION
EASTERN FEDERAL LANDS HIGHWAY DIVISION
STERLING, VIRGINIA

Vicksburg National Military Park

CONSTRUCTION PLAN

SOUTH LOOP

STA. 570+00 TO 577+00

0 25 50
SCALE IN FEET

5/21/2008 14:46:12 \\Server2004\projects\CIVILTECH\JOBS\CADD\07-001\Design\022206F-VICKI9(1)-pnp.dgn

NPS NO.	REG	STATE	PROJECT	SHEET NO.
306 / 41,918	SE	MS	PRA-VICK 10(2),12(2),19(1)	F12

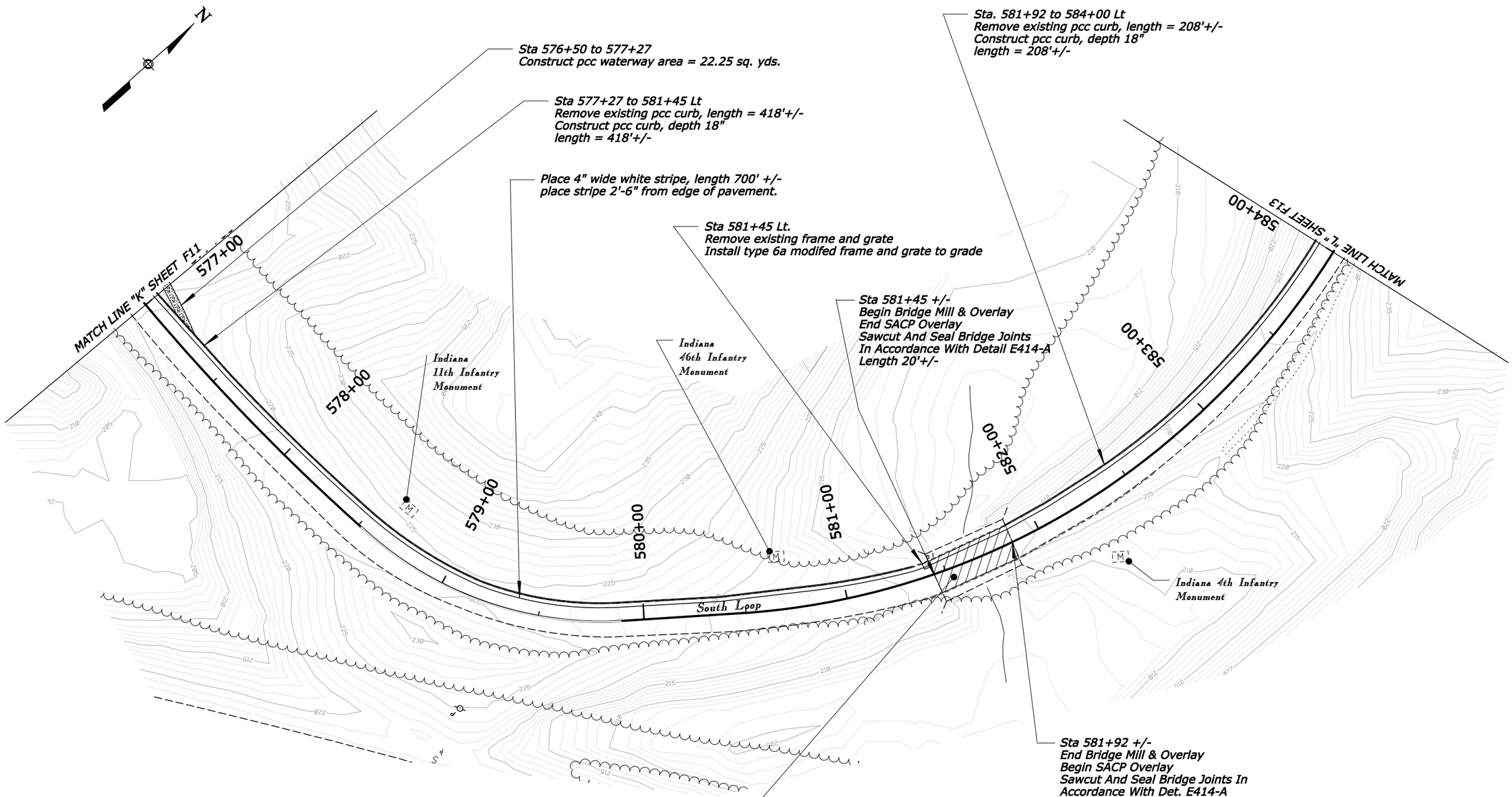

U.S. DEPARTMENT OF TRANSPORTATION
FEDERAL HIGHWAY ADMINISTRATION
EASTERN FEDERAL LANDS HIGHWAY DIVISION
STERLING, VIRGINIA

Vicksburg National Military Park

CONSTRUCTION PLAN

SOUTH LOOP

STA. 577+00 TO 584+00

0 25 50
SCALE IN FEET

5/20/2008 12:26:34 \\Server2004\projects\CIVILTECH\JOBS\CADD\07-00\Design\022206\F-VICK(9)\pnp.dgn

NPS NO.	REG	STATE	PROJECT	SHEET NO.
306 / 41,918	SE	MS	PRA-VICK 10(2),12(2),19(1)	F13

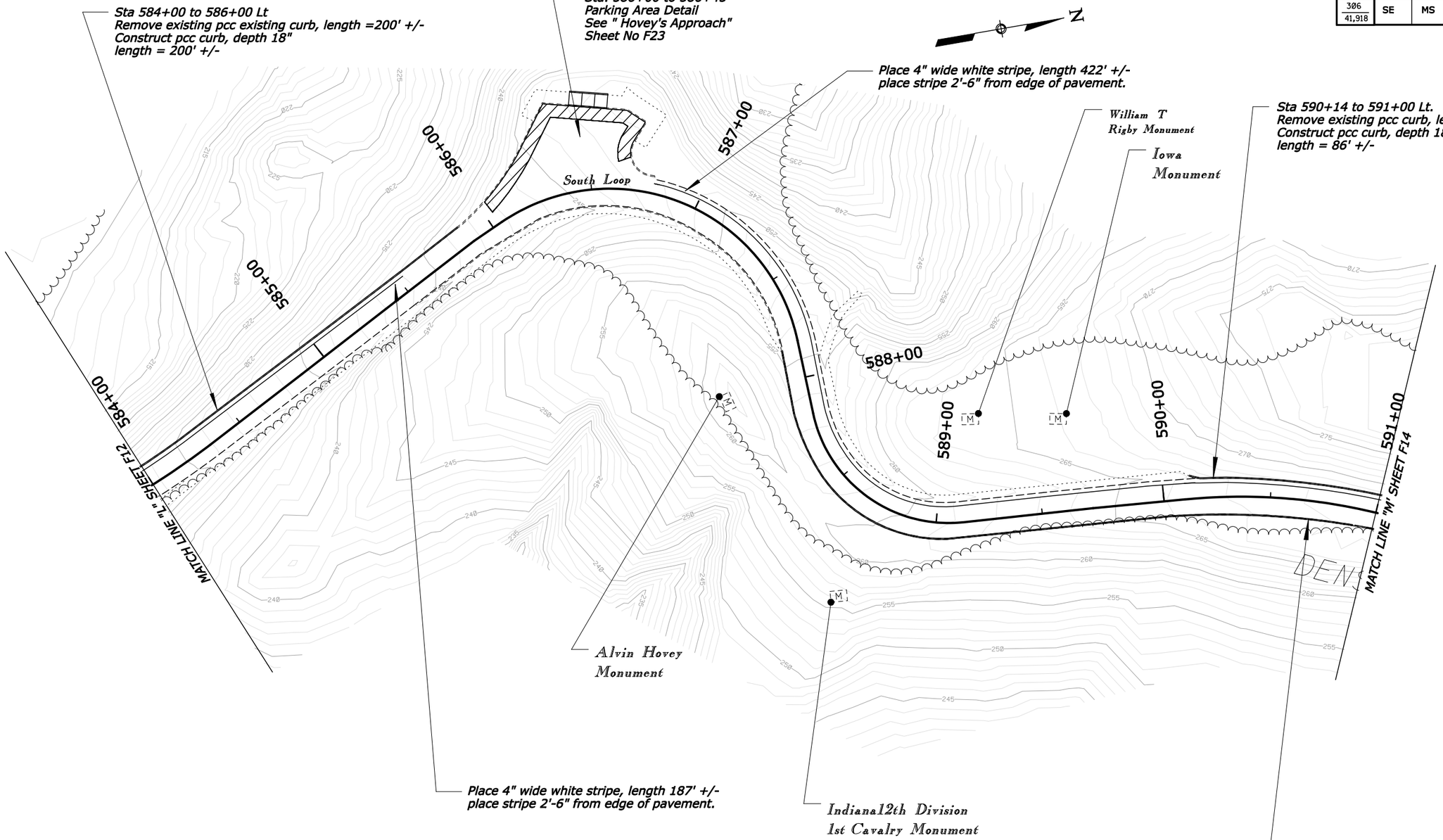

U.S. DEPARTMENT OF TRANSPORTATION
FEDERAL HIGHWAY ADMINISTRATION
EASTERN FEDERAL LANDS HIGHWAY DIVISION
STERLING, VIRGINIA

Vicksburg National Military Park

CONSTRUCTION PLAN

SOUTH LOOP

STA. 584+00 TO 591+00

0 25 50
SCALE IN FEET

5/20/2008 12:27:37 \\Server2000A\projects\CIV\LTECH\JOBS\CADD\07-001\Design\022208\F-VICK(9)1-pnp.dgn

NPS NO.	REG	STATE	PROJECT	SHEET NO.
306 / 41,918	SE	MS	PRA-VICK 10(2),12(2),19(1)	F14

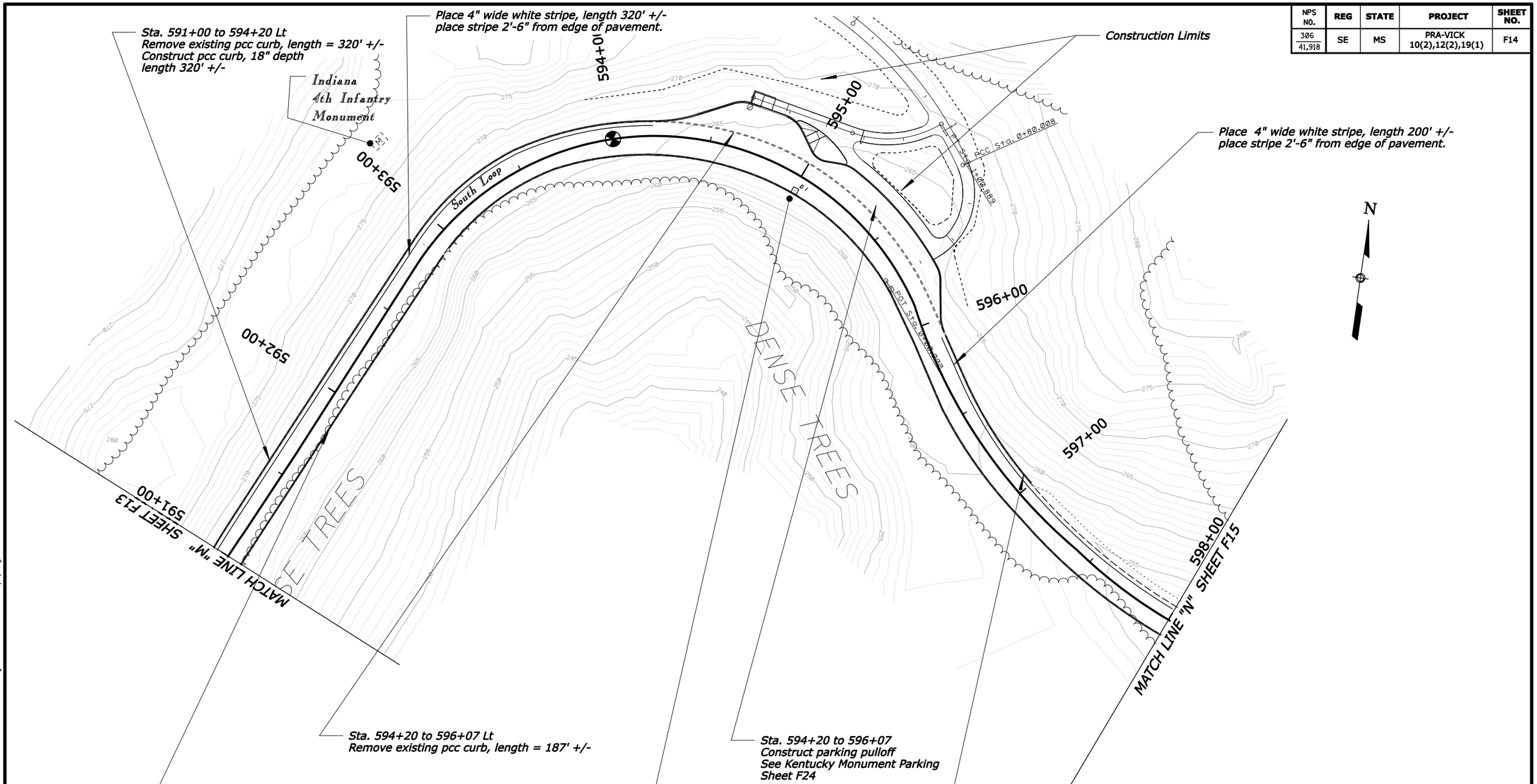

U.S. DEPARTMENT OF TRANSPORTATION
FEDERAL HIGHWAY ADMINISTRATION
EASTERN FEDERAL LANDS HIGHWAY DIVISION
STERLING, VIRGINIA

Vicksburg National Military Park

CONSTRUCTION PLAN

SOUTH LOOP

STA. 591+00 TO 598+00

0 25 50
SCALE IN FEET

5/20/2008 12:28:25 \\Server2008\projects\CN\LTECH\JOBS\CADD\07-00\Design\0222206\F-VICK(9)\l-pnp.dgn

NPS NO.	REG	STATE	PROJECT	SHEET NO.
306 / 41,918	SE	MS	PRA-VICK 10(2),12(2),19(1)	F15

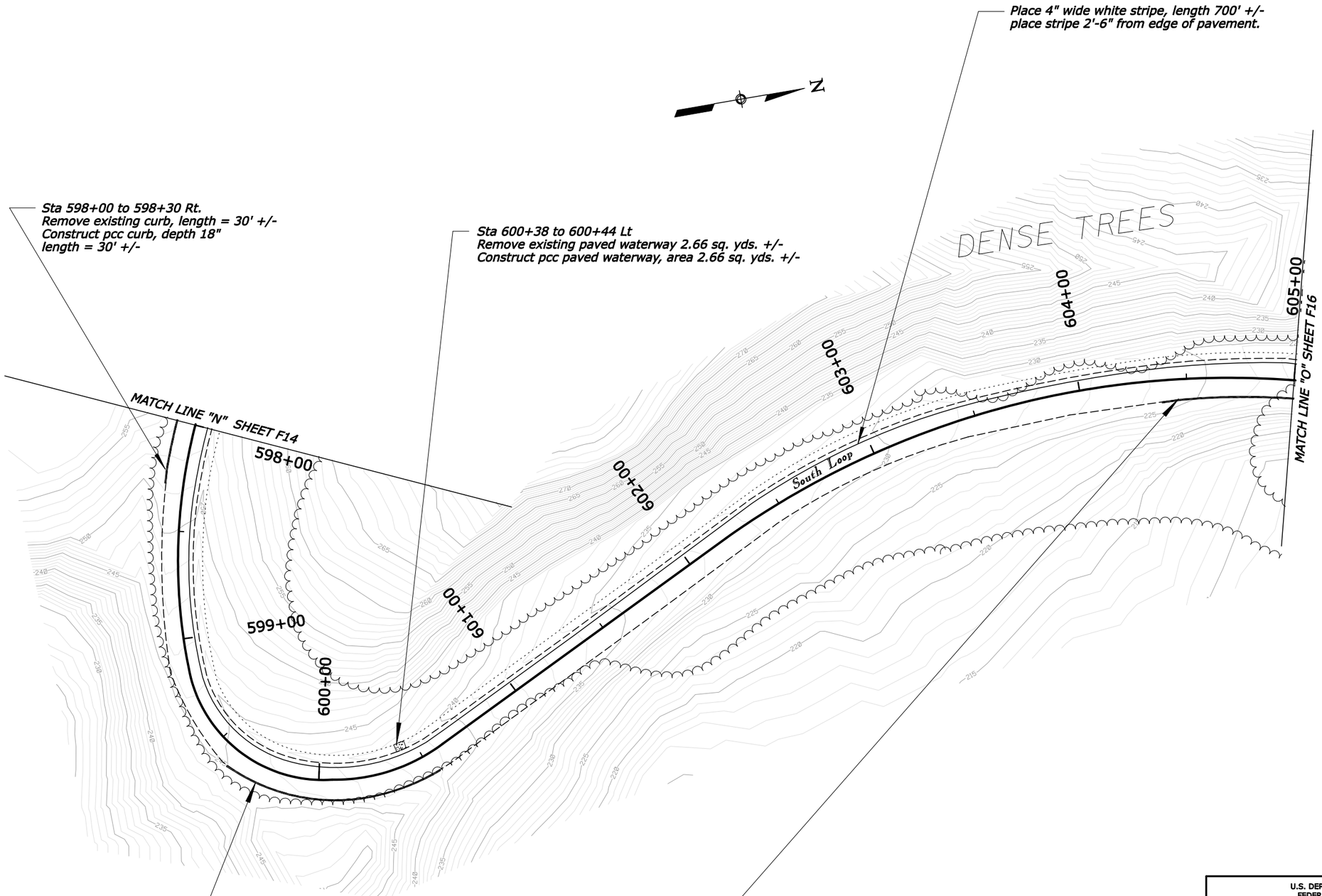

U.S. DEPARTMENT OF TRANSPORTATION
FEDERAL HIGHWAY ADMINISTRATION
EASTERN FEDERAL LANDS HIGHWAY DIVISION
STERLING, VIRGINIA

Vicksburg National Military Park

CONSTRUCTION PLAN

SOUTH LOOP

STA. 598+00 TO 605+00

0 25 50
SCALE IN FEET

5/20/2008 12:29:14 \\Server2008\projects\CIVILTECH\JOBS\CADD\07-008\Design\022208\F-VICKSKV1-pnp.dgn

NPS NO.	REG	STATE	PROJECT	SHEET NO.
306 / 41,918	SE	MS	PRA-VICK 10(2),12(2),19(1)	F16

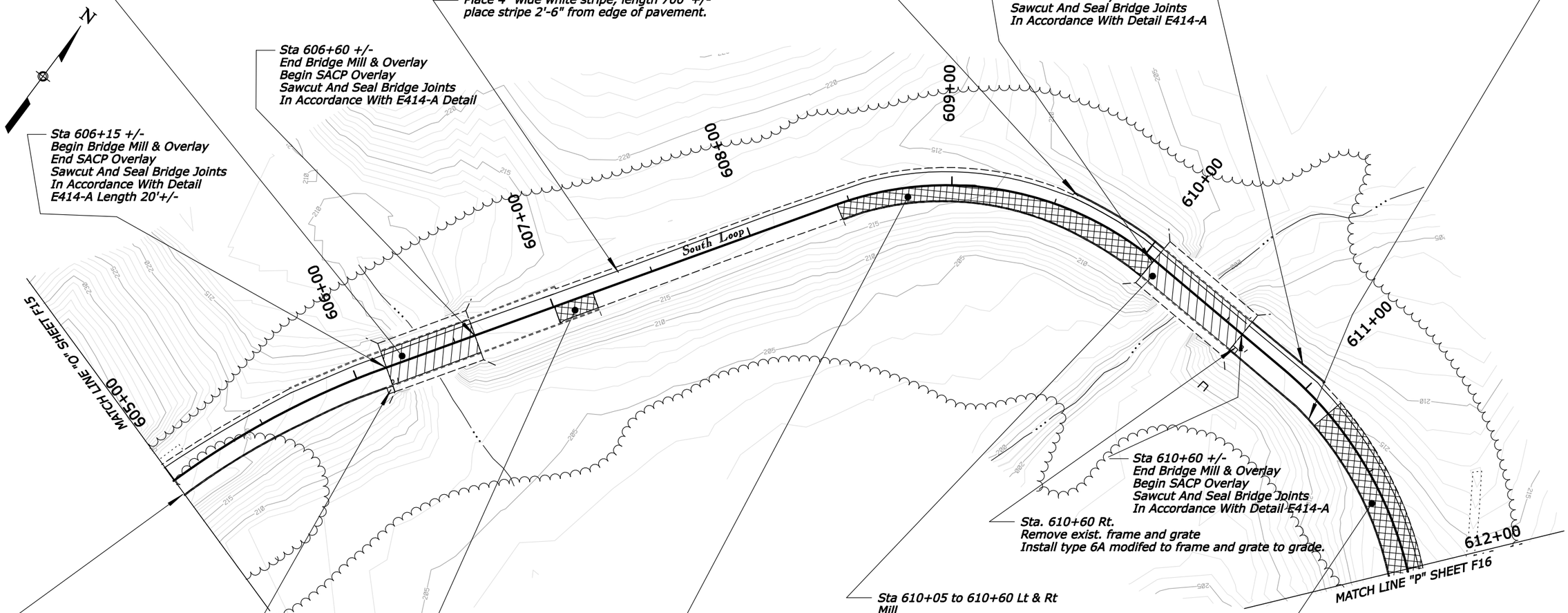

Sta 606+15 to 606+60 Lt & Rt
Mill
1 ½" Mill asphalt pavement = 83 sq. yds. +/-
See Detail Sheet No. B05.

Sta 606+60 +/-
End Bridge Mill & Overlay
Begin SACP Overlay
Sawcut And Seal Bridge Joints
In Accordance With E414-A Detail

Sta 606+15 +/-
Begin Bridge Mill & Overlay
End SACP Overlay
Sawcut And Seal Bridge Joints
In Accordance With Detail
E414-A Length 20'+/-

Sta 605+00 to 606+15 Rt
Remove exist. ppc curb = 115'
Construct pcc curb, 18" depth = 115'

Sta. 606+15 Rt
Remove existing frame and grate grate
Install type 6a modifed to frame and grade

Sta 607+00 to 607+20 Rt
Remove existing asphalt, area = 18 sq. yds.+/-
Reconstruct roadway, SACP = 2.00 tons
aggregate base = 5.7 tons

Place 4" wide white stripe, length 700' +/-
place stripe 2'-6" from edge of pavement.

Sta 609+53 to 610+05
Remove existing pcc curb, length = 52'+/-
Construct pcc curb, 18" depth
length = 52' +/-

Sta 608+44 to 610+05 Rt
Remove existing asphalt, area = 143 sq. yds. +/-
Remove existing pcc curb, length = 161'+/-
Reconstruct roadway, SACP pavement = 16.10 tons+/-
aggregate base = 45.0 tons+/-
Construct pcc curb, 18" depth
length =161' +/-

Sta 610+05 to 610+60 Lt & Rt
Mill
1 ½" Mill asphalt pavement = 101.08 sq. yds.+/-
See Detail Sheet No. B05

Sta 610+60 to 611+05 Lt
Remove existing pcc curb, length = 45'+/-
Construct pcc curb, 18" depth
length = 45' +/-

Sta 610+05 +/-
Begin Bridge Mill & Overlay
End SACP Overlay
Sawcut And Seal Bridge Joints
In Accordance With Detail E414-A

Sta. 610+60 Rt.
Remove exist. frame and grate
Install type 6A modifed to frame and grate to grade.

Sta 610+60 +/-
End Bridge Mill & Overlay
Begin SACP Overlay
Sawcut And Seal Bridge Joints
In Accordance With Detail E414-A

Sta 610+60 to 612+00 Rt
Remove existing pcc curb, length = 140'+/-
Construct pcc curb, 18" depth
length = 140' +/-

Sta 611+16 to 612+00 Lt & Rt
Remove existing asphalt pavement, area = 149 sq. yds.
Reconstruct roadway, SACP = 16.80 tons
aggregate base = 47.00 tons

U.S. DEPARTMENT OF TRANSPORTATION
FEDERAL HIGHWAY ADMINISTRATION
EASTERN FEDERAL LANDS HIGHWAY DIVISION
STERLING, VIRGINIA

Vicksburg National Military Park

CONSTRUCTION PLAN

SOUTH LOOP

STA. 605+00 TO 612+00

0 25 50
SCALE IN FEET

6/12/2008 3:51:08 PM T:\HWY\AK\Vicksmilpark\VICK (02)\(12)\(19)\RECEIVEDFROMCN\LTECH\6-3-08\CADDFILES\022208\F-VICK19\1-pnpdgn

NPS NO.	REG	STATE	PROJECT	SHEET NO.
306 / 41,918	SE	MS	PRA-VICK 10(2),12(2),19(1)	F17

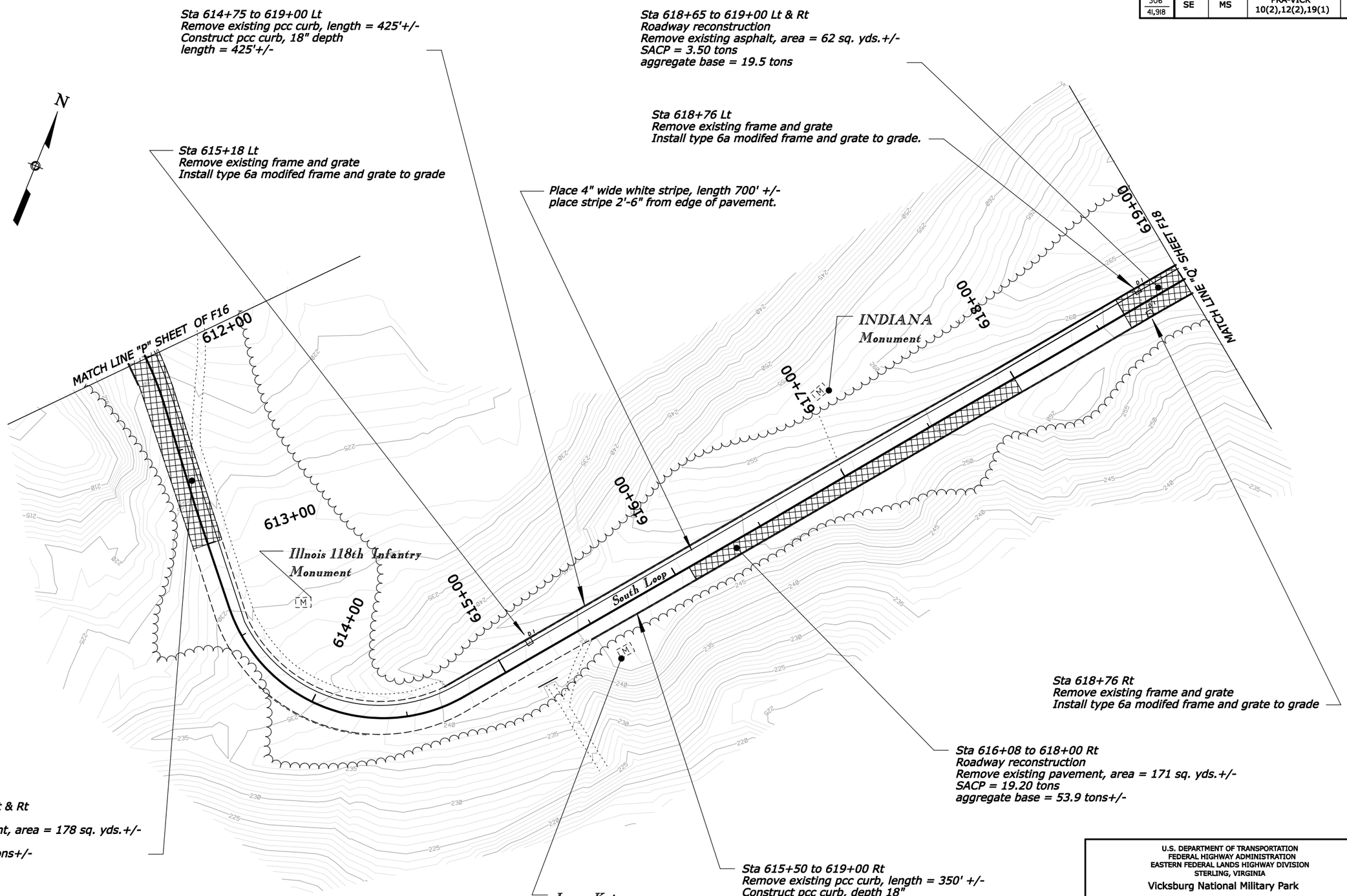

U.S. DEPARTMENT OF TRANSPORTATION
FEDERAL HIGHWAY ADMINISTRATION
EASTERN FEDERAL LANDS HIGHWAY DIVISION
STERLING, VIRGINIA

Vicksburg National Military Park

CONSTRUCTION PLAN

SOUTH LOOP

STA. 612+00 TO 619+00

0 25 50
SCALE IN FEET

6/12/2008 3:51:33 PM T:\HWY\AK\Vicksw\IPark\VICK 10(2)\12(2)\19(1)\RECEIVEDFROMCN\ILTECH\6-3-08\CADDFILES\022208\F-VICK19(1)-pnpdgn

NPS NO.	REG	STATE	PROJECT	SHEET NO.
306 / 41,918	SE	MS	PRA-VICK 10(2),12(2),19(1)	F18

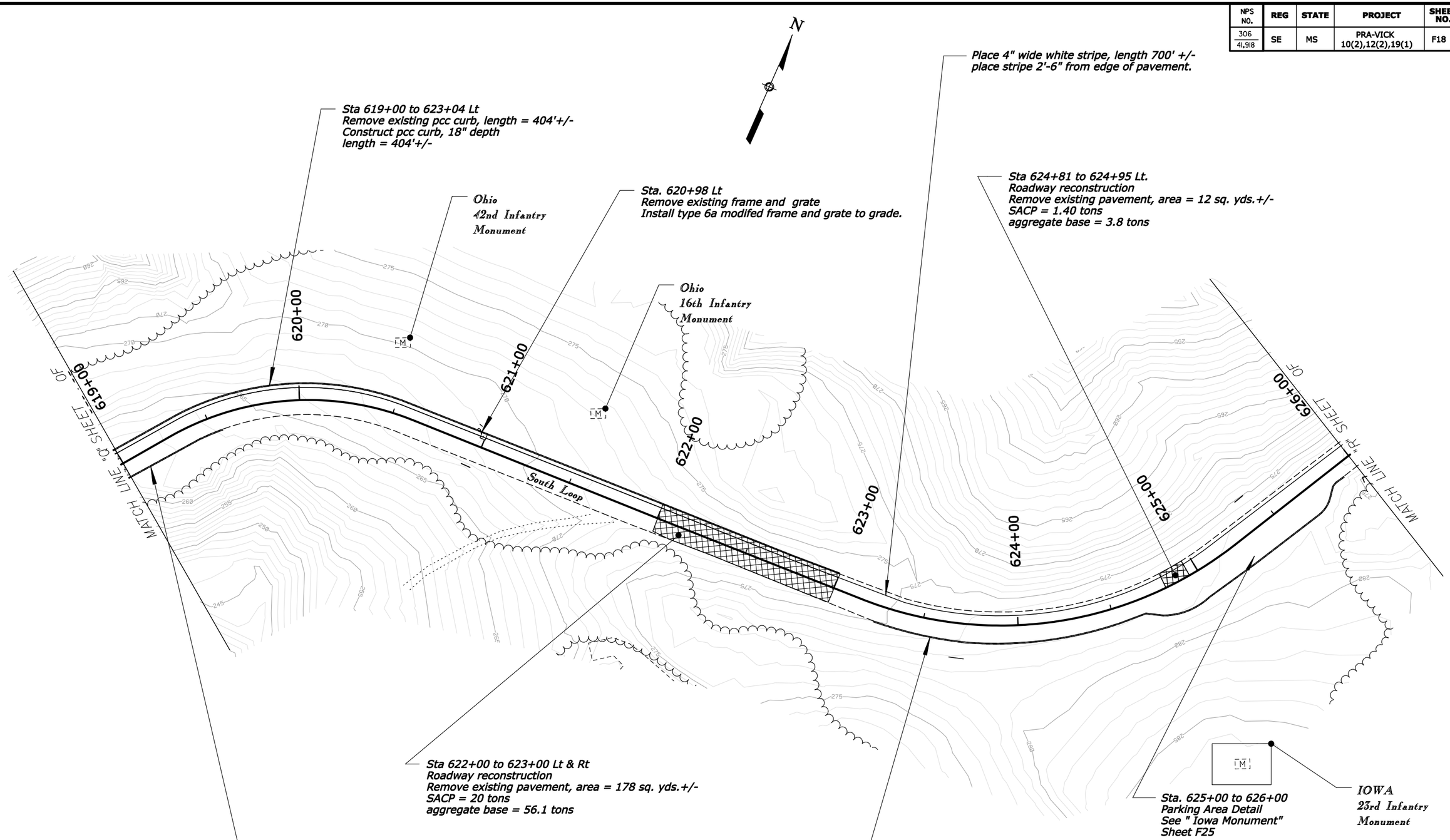

U.S. DEPARTMENT OF TRANSPORTATION
FEDERAL HIGHWAY ADMINISTRATION
EASTERN FEDERAL LANDS HIGHWAY DIVISION
STERLING, VIRGINIA

Vicksburg National Military Park

CONSTRUCTION PLAN

SOUTH LOOP

STA. 619+00 TO 626+00

0 25 50
SCALE IN FEET

6/12/2008 3:51:57 PM T:\HWY\AK\V\icksMilPark\VICK 10(2)-12(2)-19(1)\RECEIVEDFROMCIVILTECH\6-3-08\CADDFILES\022208\F-VICK19(1)-pnpdgn

NPS NO.	REG	STATE	PROJECT	SHEET NO.
306 / 41,918	SE	MS	PRA-VICK 10(2),12(2),19(1)	F19

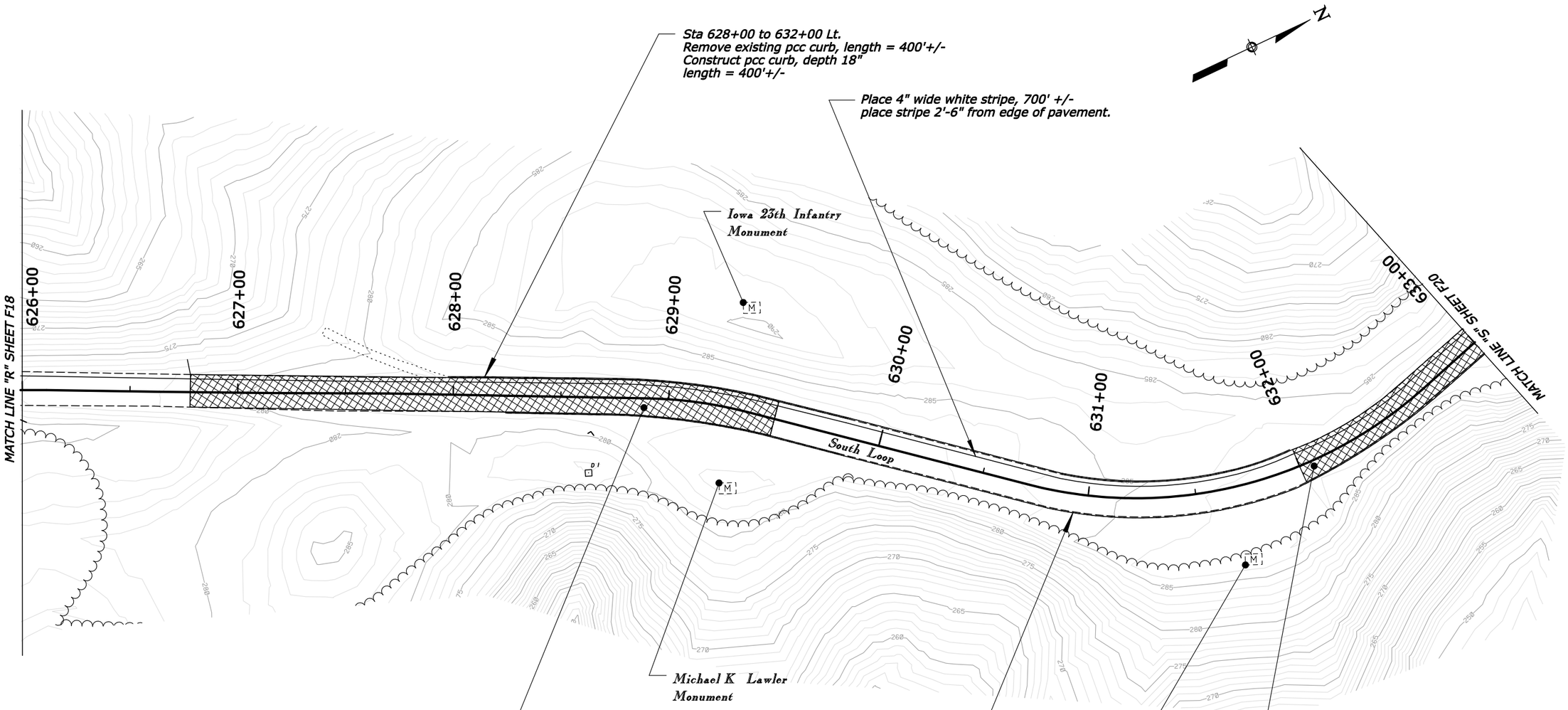

Sta 628+00 to 632+00 Lt.
Remove existing pcc curb, length = 400'+/-
Construct pcc curb, depth 18"
length = 400'+/-

Place 4" wide white stripe, 700' +/-
place stripe 2'-6" from edge of pavement.

Sta 628+81 to 632+00 Rt
Remove existing curb, length = 319'+/-
Construct pcc curb, 18" depth
length = 319'+/-

Sta 632+00 to 633+00 Lt & Rt
Roadway reconstruction
Remove existing pavement, area = 178 sq. yds.+/-
SACP = 20 tons
aggregate base = 56.1 tons+/-

Sta 626+78 to 629+50 Lt. & Rt.
Roadway reconstruction
Remove existing asphalt pavement, area = 484 sq. yds.+/-
SACP = 54.40 tons
aggregate base = 152.5 tons+/-

U.S. DEPARTMENT OF TRANSPORTATION
FEDERAL HIGHWAY ADMINISTRATION
EASTERN FEDERAL LANDS HIGHWAY DIVISION
STERLING, VIRGINIA

Vicksburg National Military Park

CONSTRUCTION PLAN

SOUTH LOOP

STA. 626+00 TO 633+00

0 25 50
SCALE IN FEET

6/12/2008 3:52:18 PM T:\HWY\AK\Vicksmilpark\VICK (02)\12(2)\19(1)\RECEIVEDFROMCN\LTECH\6-3-08\CADDFILES\022208\F-VICK19(1)-pnpdgn

NPS NO.	REG	STATE	PROJECT	SHEET NO.
306 / 41,918	SE	MS	PRA-VICK 10(2),12(2),19(1)	F20

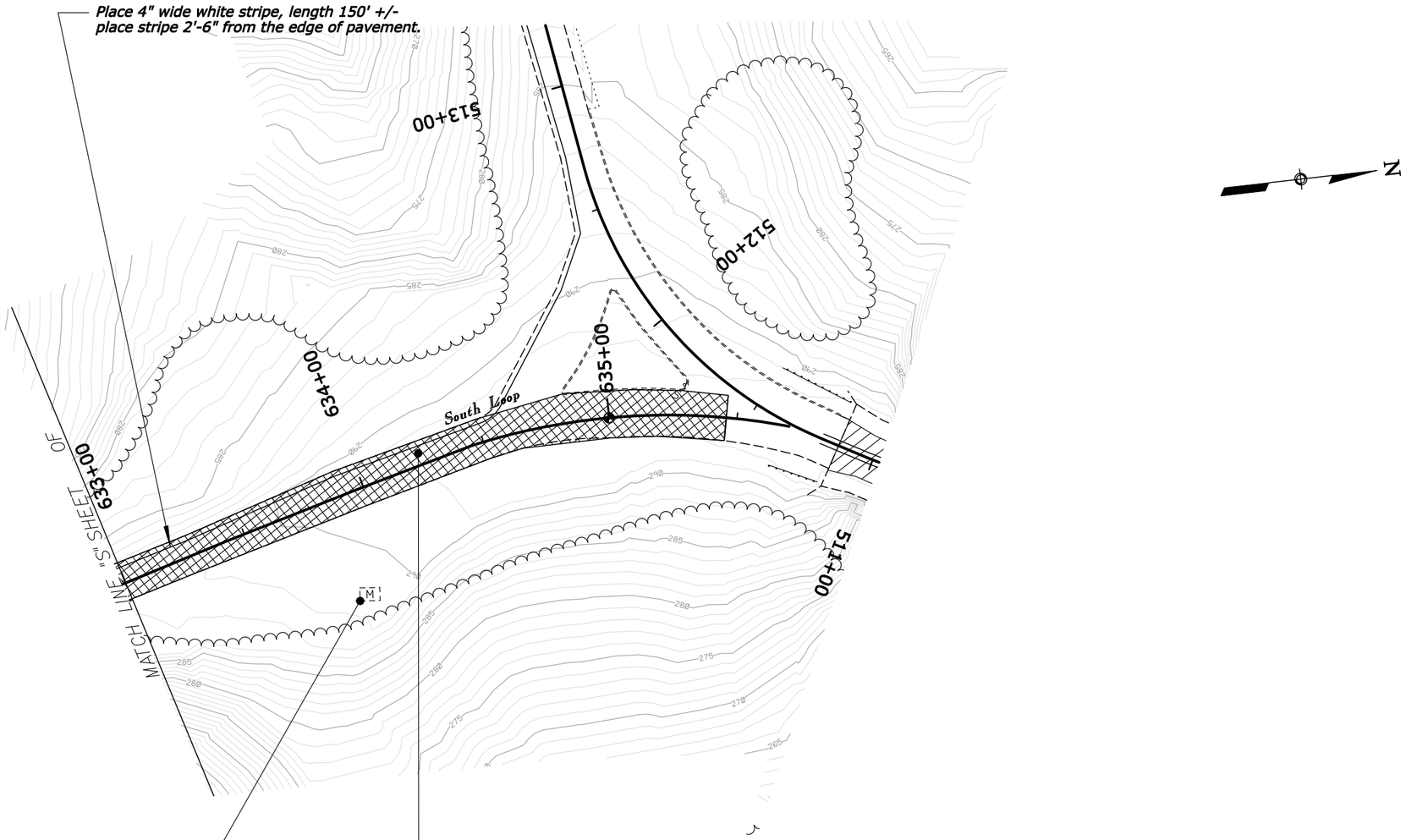

Sta 633+00 to 635+46 Lt & Rt
Roadway reconstruction
Remove existing pavement,area = 437 sq. yds.+/-
SACP = 49.17 tons
aggregate base = 193.7 tons

U.S. DEPARTMENT OF TRANSPORTATION
FEDERAL HIGHWAY ADMINISTRATION
EASTERN FEDERAL LANDS HIGHWAY DIVISION
STERLING, VIRGINIA

Vicksburg National Military Park

CONSTRUCTION PLAN

SOUTH LOOP

STA. 633+00 TO 635+46

0 25 50
SCALE IN FEET

6/12/2008 3:52:39 PM T:\HWY\AK\Vicksburg\Park\VICK (X(2)\12(2)\19(1)\RECEIVEDFROMCN\ILTECH\6-3-08\CADDFILES\022208\F-VICK19(1)-pnpdgn

NPS NO.	REG	STATE	PROJECT	SHEET NO.
306 / 41,918	SE	MS	PRA-VICK 10(2),12(2),19(1)	F21

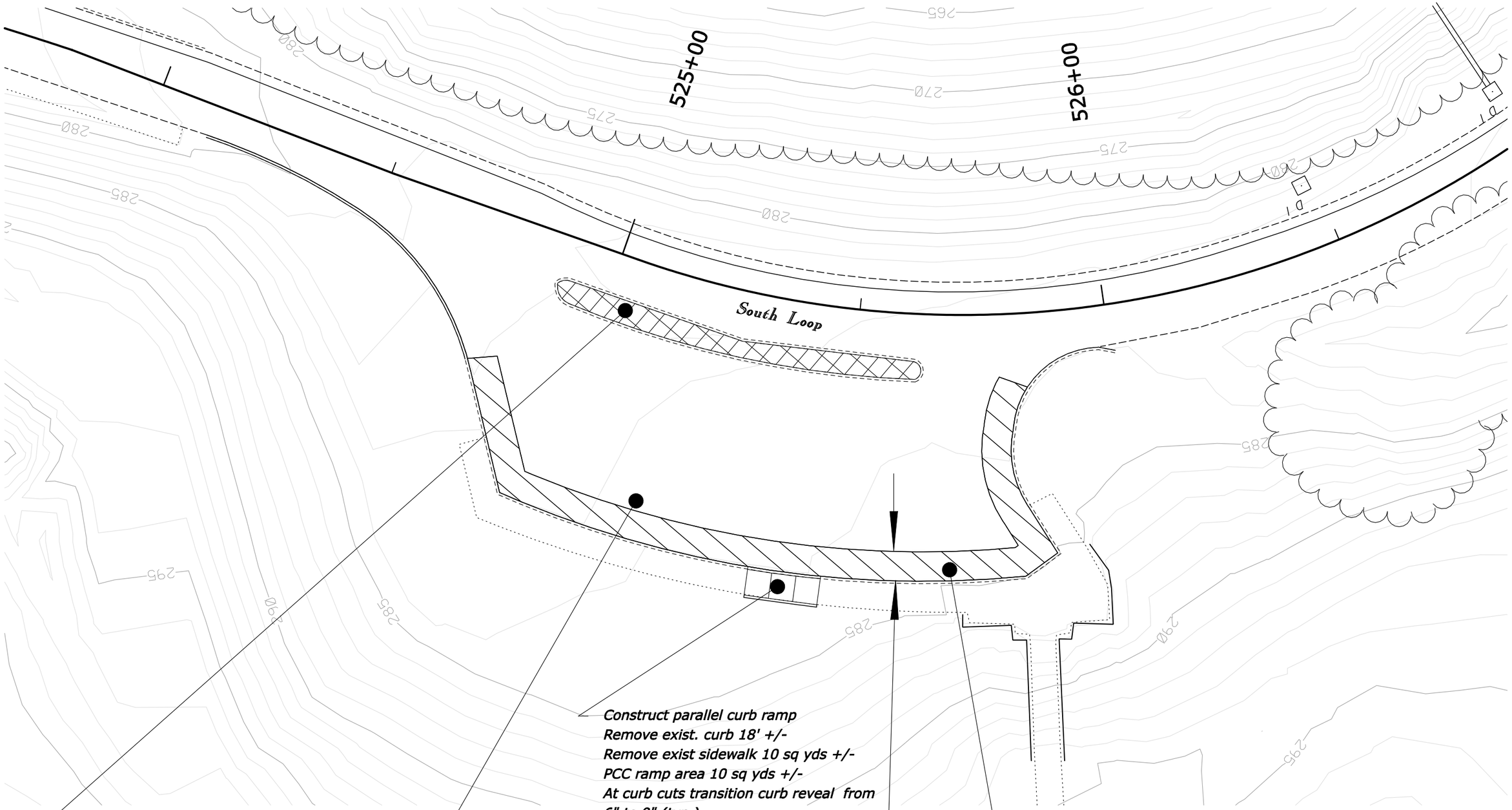

U.S. DEPARTMENT OF TRANSPORTATION
FEDERAL HIGHWAY ADMINISTRATION
EASTERN FEDERAL LANDS HIGHWAY DIVISION
STERLING, VIRGINIA

Vicksburg National Military Park

CONSTRUCTION PLAN

TEXAS MONUMENT

STA. 521+00 TO 528+00

0 10 20
SCALE IN FEET

6/12/2008 3:53:03 PM T:\HWY\AK\VicksMilPark\VICK 10(2)-12(2)-19(1)\RECEIVEDFROMCN\LTECH\6-3-08\CADDFILES\022208\F-VICK19(1)-prpd.dgn

NPS NO.	REG	STATE	PROJECT	SHEET NO.
306 / 41,918	SE	MS	PRA-VICK 10(2),12(2),19(1)	F22

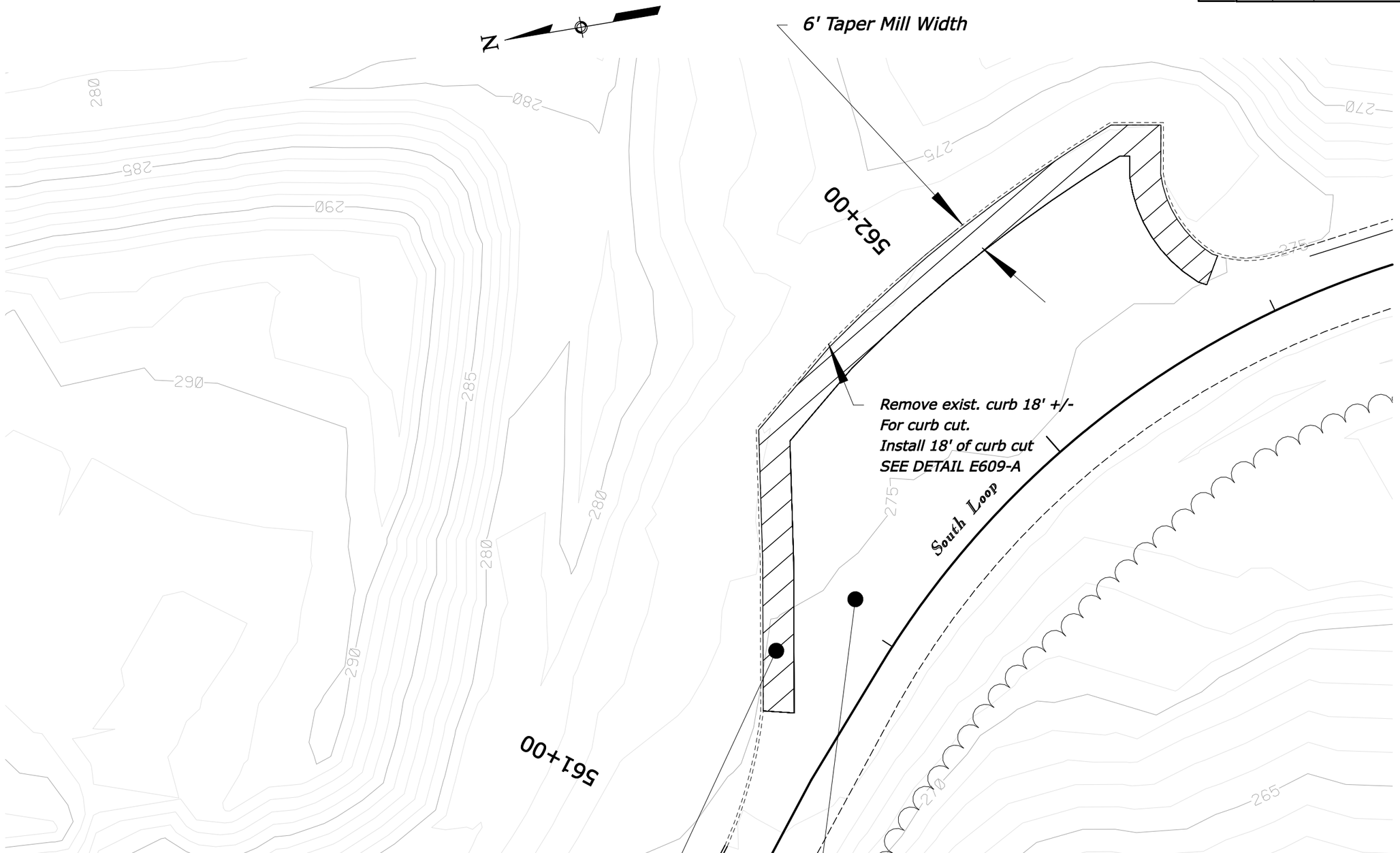

U.S. DEPARTMENT OF TRANSPORTATION
FEDERAL HIGHWAY ADMINISTRATION
EASTERN FEDERAL LANDS HIGHWAY DIVISION
STERLING, VIRGINIA

Vicksburg National Military Park

CONSTRUCTION PLAN
FORT GARROTT
STA. 561+00 TO 562+20

0 10 20
SCALE IN FEET

5/20/2008 12:33:44 \\Server2004\projects\CIV\LTECH\JOBS\CADD\07-008\Design\022208\F-VICK(9)\I-prp.dgn

NPS NO.	REG	STATE	PROJECT	SHEET NO.
306 / 41,918	SE	MS	PRA-VICK 10(2),12(2),19(1)	F23

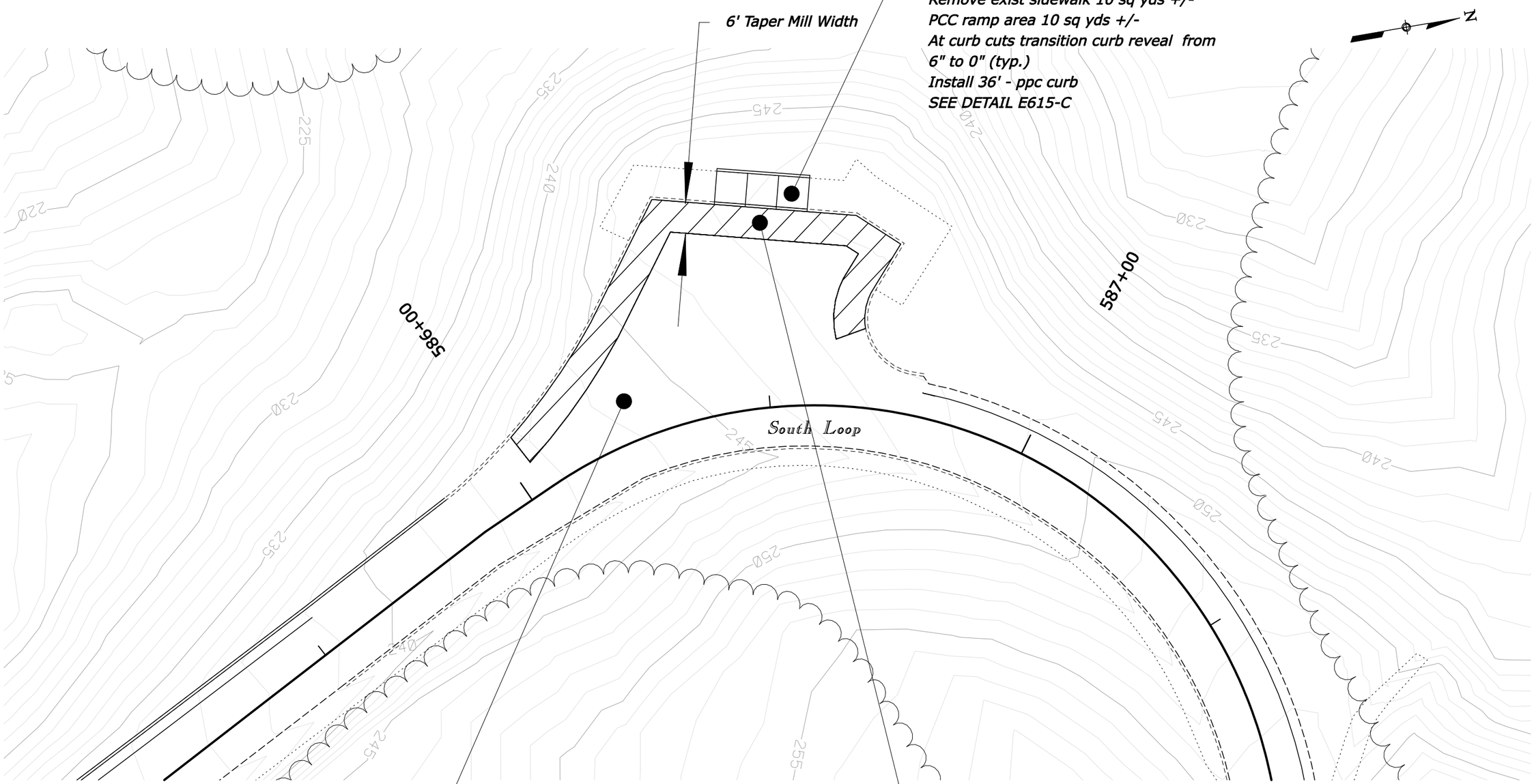

U.S. DEPARTMENT OF TRANSPORTATION
FEDERAL HIGHWAY ADMINISTRATION
EASTERN FEDERAL LANDS HIGHWAY DIVISION
STERLING, VIRGINIA

Vicksburg National Military Park

CONSTRUCTION PLAN

HOVEY'S APPROACH

STA. 586+00 TO 586+75

0 10 20
SCALE IN FEET

5/20/2008 12:34:26 \\Server2004\projects\CIVILTECH\JOBS\CADD\07-001\Design\022206\F-VICK19(1)-prop.dgn

REG	STATE	PROJECT	SHEET NO.
SE	MS	PRA-VICK 10(2),12(2),19(1)	F24

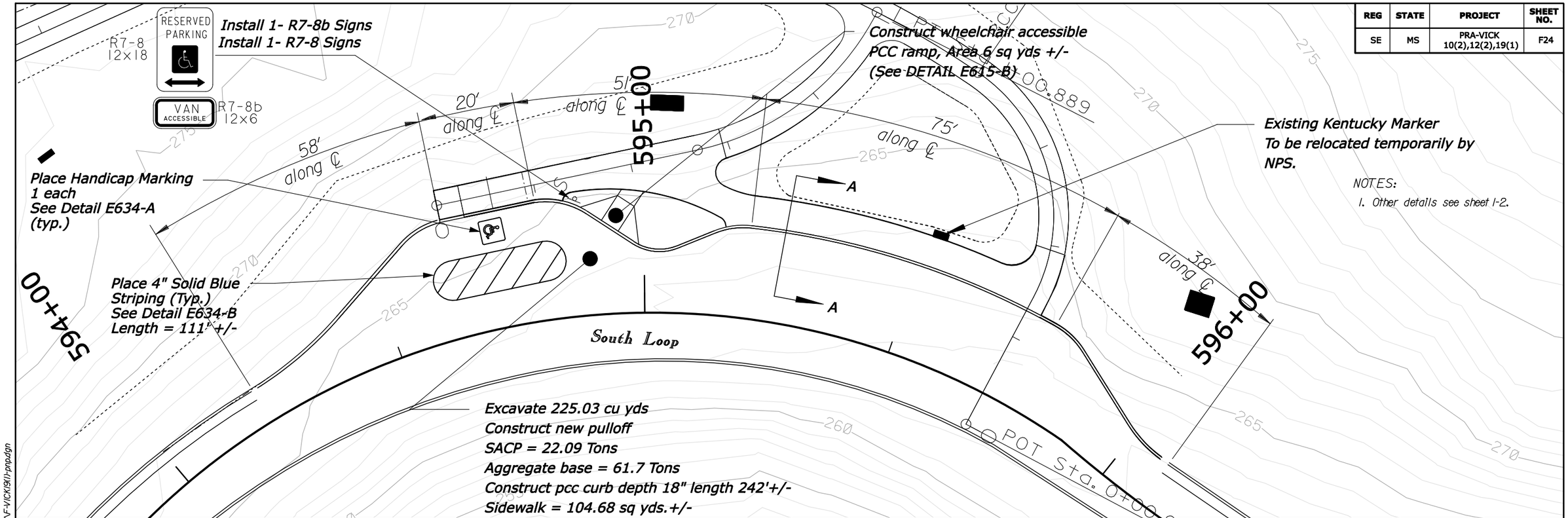

NOTES:

1. Other details see sheet I-2.

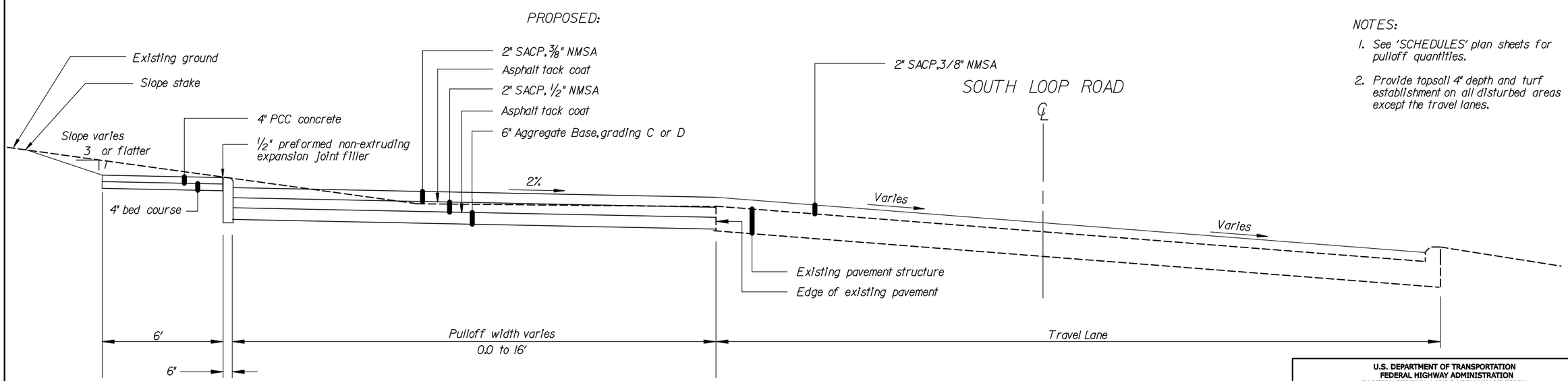

NOTES:

1. See 'SCHEDULES' plan sheets for pulloff quantities.
2. Provide topsoil 4" depth and turf establishment on all disturbed areas except the travel lanes.

SECTION A-A

U.S. DEPARTMENT OF TRANSPORTATION
FEDERAL HIGHWAY ADMINISTRATION
EASTERN FEDERAL LANDS HIGHWAY DIVISION
STERLING, VIRGINIA

Vicksburg National Military Park

CONSTRUCTION PLAN

KENTUCKY MONUMENT PULLOFF

STA. 594+20 TO 596+07

0 10 20
SCALE IN FEET

6/12/2008 3:53:27 PM T:\HMM\AK\Vicks\MilPark\VICK 10(2)-12(2)-19(1)\RECEIVED FROM CIVIL TECH\6-3-08\CADD FILES\02220BV-VICK19(1)-pnp.dgn

NPS NO.	REG	STATE	PROJECT	SHEET NO.
306 / 41,918	SE	MS	PRA-VICK 10(2),12(2),19(1)	F25

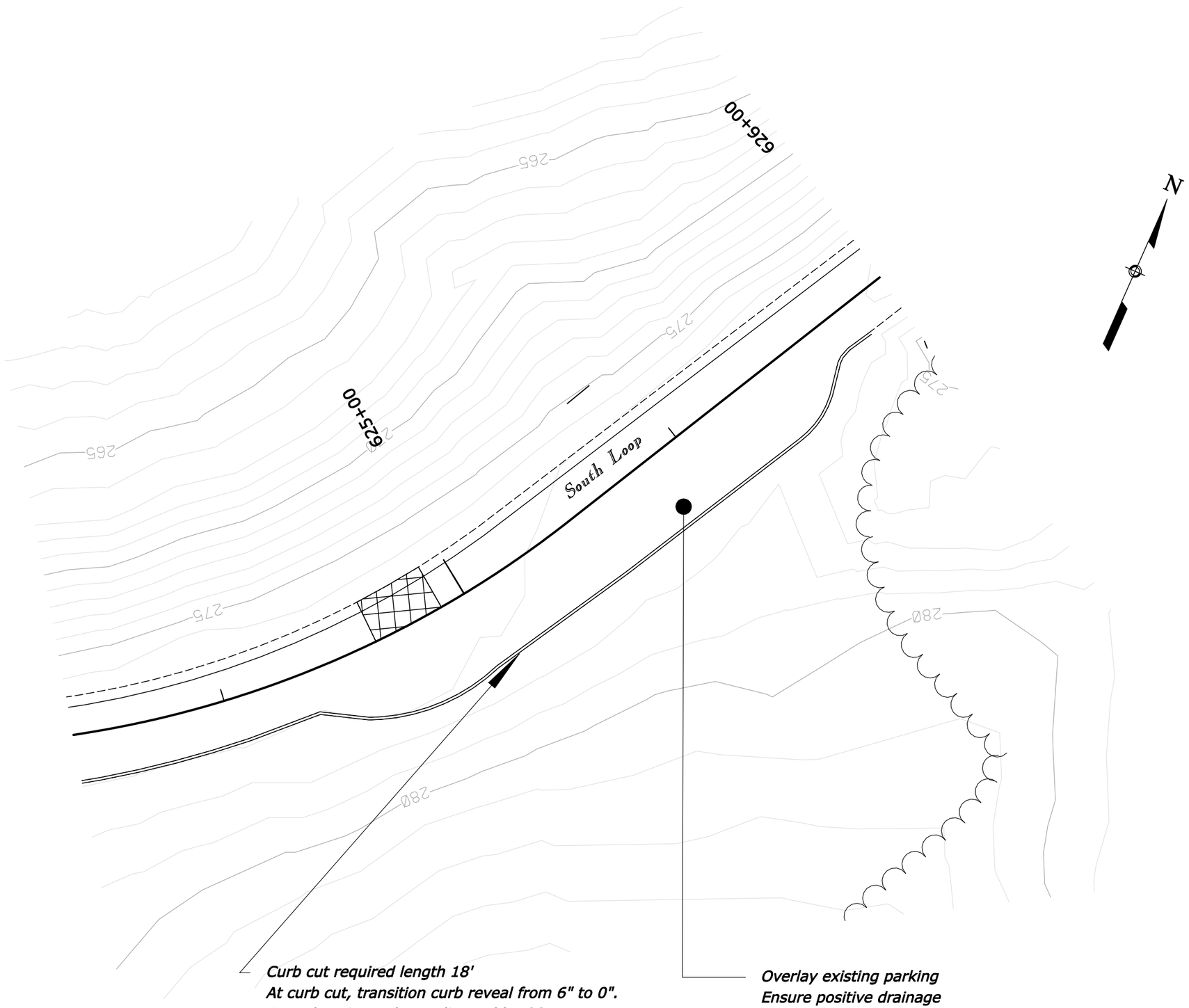

Curb cut required length 18'
At curb cut, transition curb reveal from 6" to 0".
Exact location to be as directed by CO
SEE DETAIL E609-A

Overlay existing parking
Ensure positive drainage
SACP = 8.03 Tons

U.S. DEPARTMENT OF TRANSPORTATION
FEDERAL HIGHWAY ADMINISTRATION
EASTERN FEDERAL LANDS HIGHWAY DIVISION
STERLING, VIRGINIA

Vicksburg National Military Park

CONSTRUCTION PLAN
IOWA MONUMENT
STA. 625+00 TO 626+00

0 10 20
SCALE IN FEET

6/12/2008 3:53:58 PM T:\HWY\AK\Vicksburg\Park\VICK 10(2)-12(2)-19(1)\RECEIVED FROM CIVIL TECH\6-3-08\CADD FILES\02220\F-VICK19(1)-pnp.dgn

NPS NO.	REG	STATE	PROJECT	SHEET NO.
306 / 41,918	SE	MS	PRA-VICK 10(2),12(2),19(1)	G01

Note:

1. Stake proposed sidewalk alignment for approval by CO prior to construction of sidewalk.

2. For typical section of sidewalk see detail E615-A. Width = 6' (typ.)

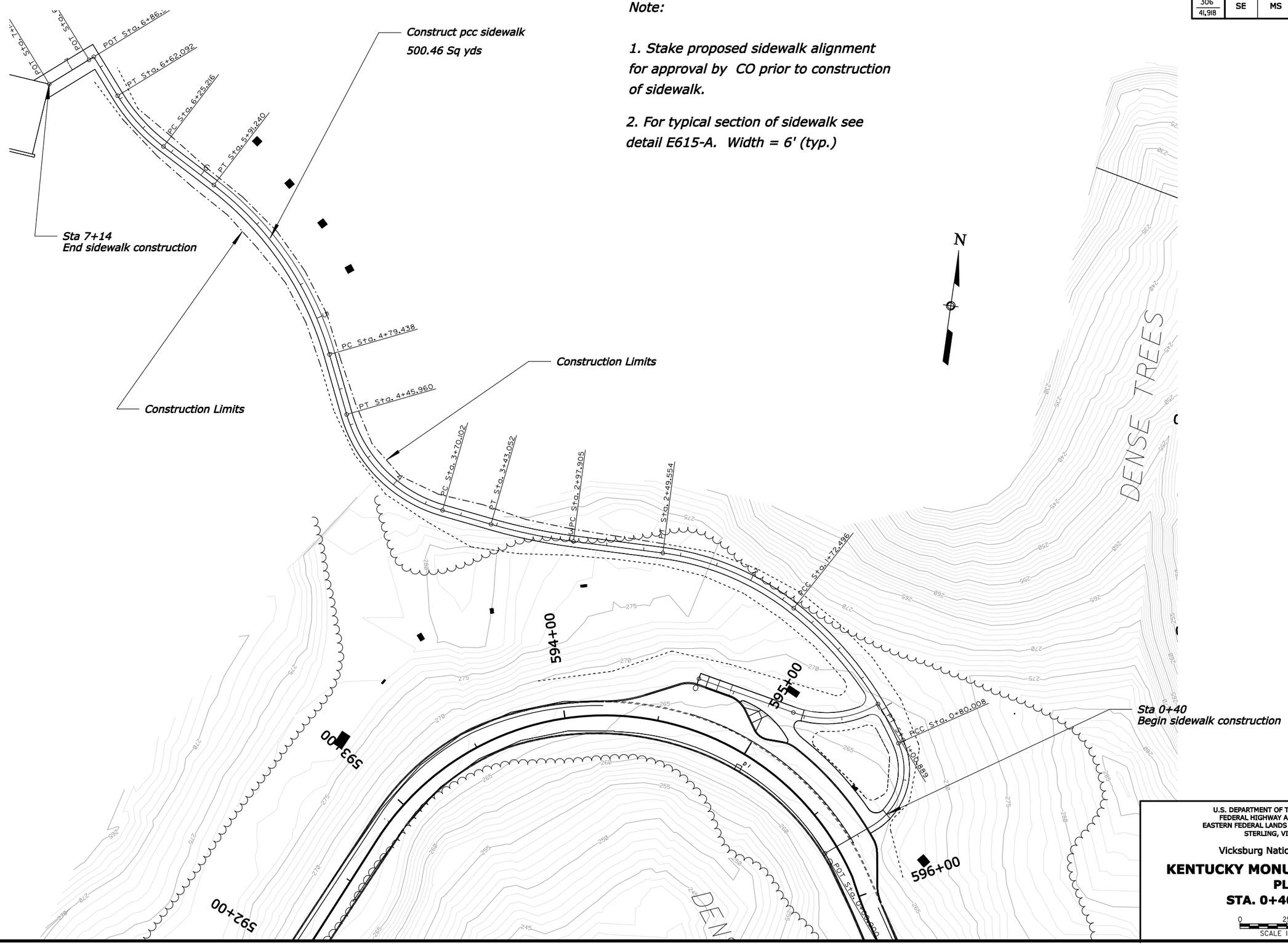

U.S. DEPARTMENT OF TRANSPORTATION
FEDERAL HIGHWAY ADMINISTRATION
EASTERN FEDERAL LANDS HIGHWAY DIVISION
STERLING, VIRGINIA

Vicksburg National Military Park

KENTUCKY MONUMENT SIDEWALK PLAN

STA. 0+40 TO 6+75

0 25 50
SCALE IN FEET

6/12/2008 4:07:35 PM T:\HWY\AK\Vicksburg\Park\VICK 10(2)-12(2)-19(1)\RECEIVED FROM CIV\LTECH\6-3-08\CADD FILES\022208\G-VICK19(1)_plnadgn

NPS NO.	REG	STATE	PROJECT	SHEET NO.
306 / 41,918	SE	MS	PRA-VICK 10(2),12(2),19(1)	G02

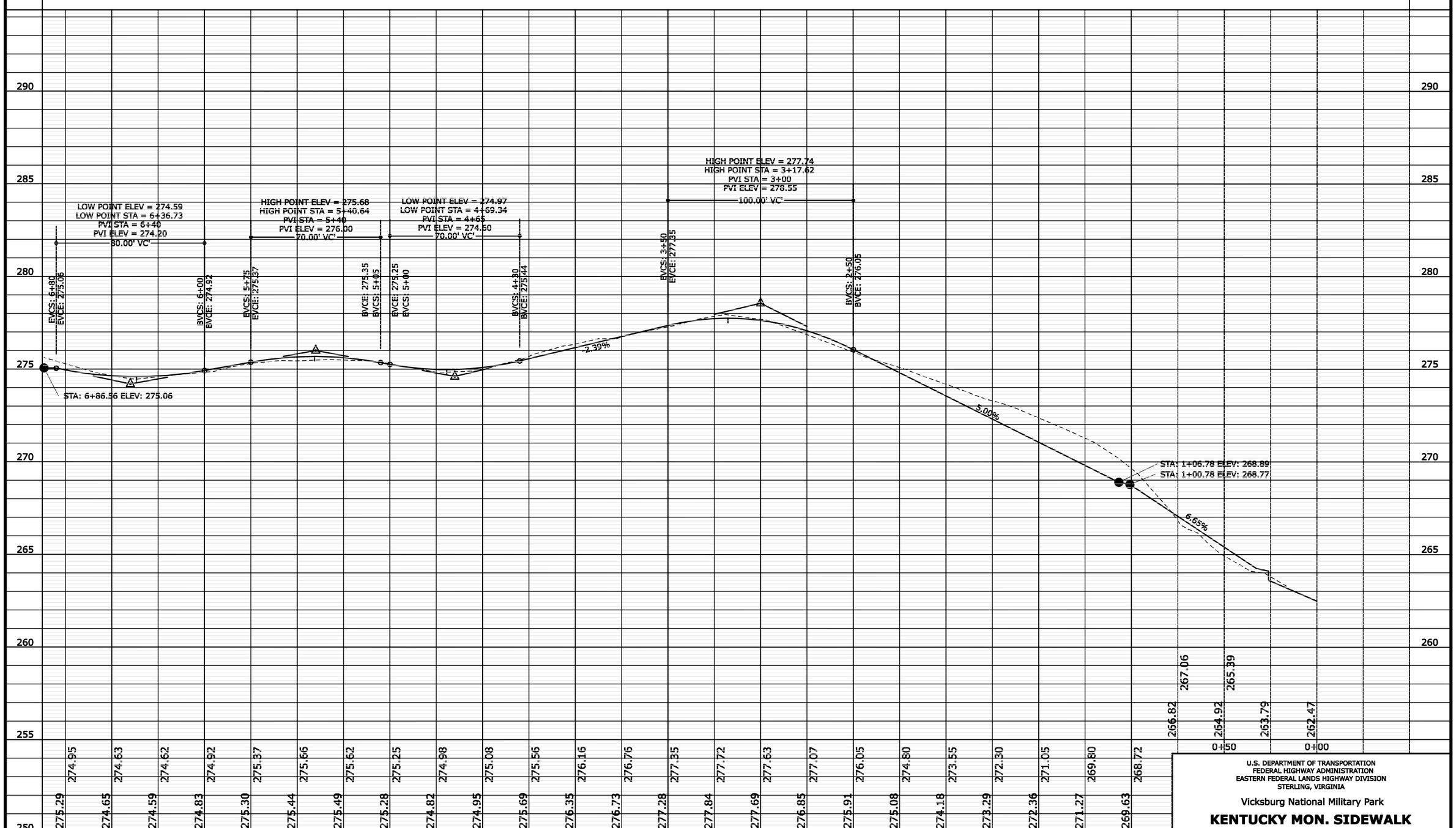

U.S. DEPARTMENT OF TRANSPORTATION
FEDERAL HIGHWAY ADMINISTRATION
EASTERN FEDERAL LANDS HIGHWAY DIVISION
STERLING, VIRGINIA

Vicksburg National Military Park

KENTUCKY MON. SIDEWALK
PROFILE
STA. 0+00 TO 6+86

0 25 50
SCALE IN FEET

NPS NO.	REG	STATE	PROJECT	SHEET NO.
306 / 41,918	SE	MS	PRA-VICK 10(2),12(2),19(1)	GO3

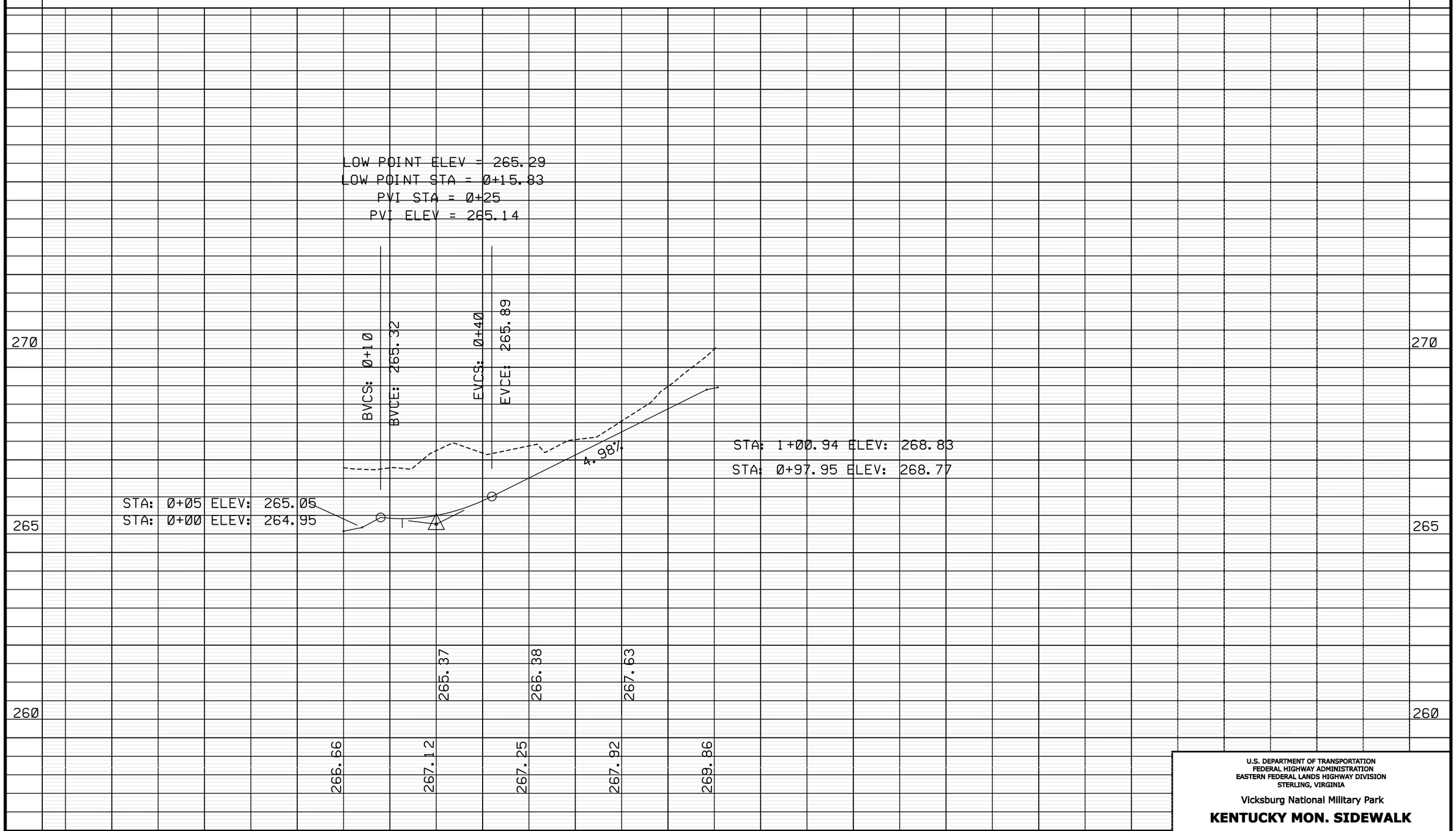

U.S. DEPARTMENT OF TRANSPORTATION
FEDERAL HIGHWAY ADMINISTRATION
EASTERN FEDERAL LANDS HIGHWAY DIVISION
STERLING, VIRGINIA

Vicksburg National Military Park

KENTUCKY MON. SIDEWALK

STA. 0+00 TO 6+86

0 25 50
SCALE IN FEET

NPS NO.	REG	STATE	PROJECT	SHEET NO.
306 / 41,918	SE	MS	PRA-VICK 10(2),12(2),19(1)	G04

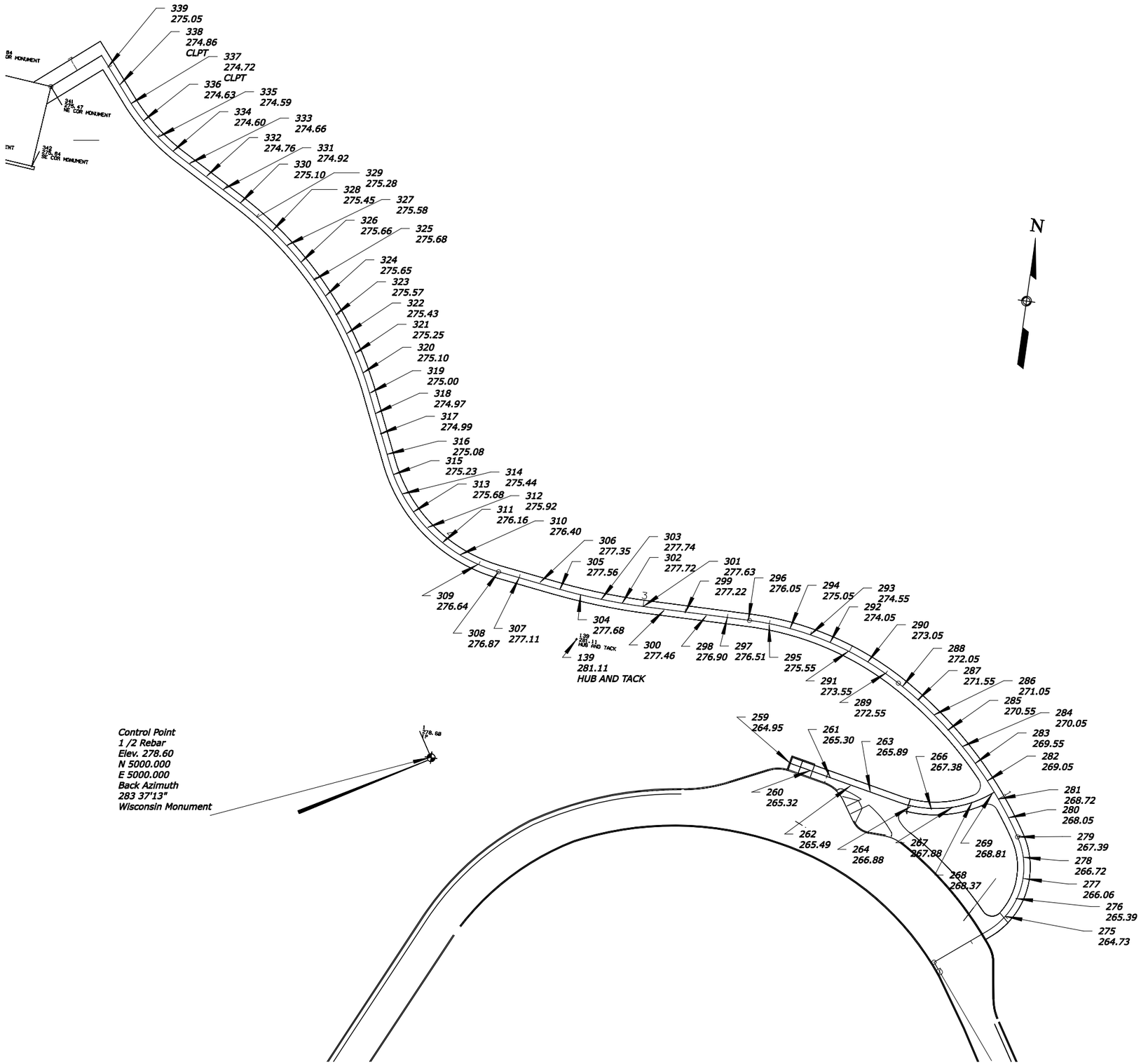

U.S. DEPARTMENT OF TRANSPORTATION
FEDERAL HIGHWAY ADMINISTRATION
EASTERN FEDERAL LANDS HIGHWAY DIVISION
STERLING, VIRGINIA

Vicksburg National Military Park

KENTUCKY MONUMENT SIDEWALK
CONTROL POINTS
STA. 0+40 TO 6+75

0 25 50
SCALE IN FEET

5/20/2008 12:42:22 \\Server2004\projects\CIVILTECH\JOBS\CADD\07-001\Design\022208\G-VICKIS(1_pln.dgn

NPS NO.	REG	STATE	PROJECT	SHEET NO.
306 / 41,918	SE	MS	PRA-VICK 10(2),12(2),19(1)	G05

RADIAL STAKEOUT OPTION

Occ. Pt. 1 N 5000.0000 IP
E 5000.0000 278.60

Back Pt. 345 N 4947.9292 Back Azimuth
E 4914.6265

Stake Pt.	Angle Right	Distance	Desc/Elev	
259	204-43-15	169.19'	264.95	CLPT
260	205-45-26	178.69'	265.32	CLPT
261	206-41-19	188.23'	265.30	CLPT
262	207-31-48	197.82'	265.49	CLPT
263	208-17-37	207.45'	265.89	CLPT
264	208-59-21	217.11'	266.38	CLPT
265	209-31-58	226.88'	266.88	CLPT
266	209-36-34	236.86'	267.38	CLPT
267	209-14-39	246.73'	267.88	CLPT
268	208-29-54	256.16'	268.37	CLPT
269	207-25-56	264.89'		CLPT
270	207-19-01	265.67'		CLPT
271	225-56-50	255.64'	262.47	CLPT
272	224-12-44	261.85'	262.91	CLPT
273	222-33-33	268.30'	263.34	CLPT
274	220-58-58	274.94'	264.18	CLPT
275	219-16-04	280.44'	264.73	CLPT
276	217-21-09	283.67	265.39	CLPT
277	215-20-55	284.46'	266.06	CLPT
278	213-21-53	282.75'	266.72	CLPT
279	211-30-39	278.65'	267.39	CLPT
280	209-45-16	273.32'	268.05	CLPT
281	207-59-16	267.80'	268.72	CLPT
282	206-12-35	262.11'	269.05	CLPT
283	204-25-10	256.25'	269.55	CLPT
284	202-36-55	250.21'	270.05	CLPT
285	200-47-46	244.01'	270.55	CLPT
286	198-57-37	237.65'	271.05	CLPT
287	197-06-21	231.14'	271.55	CLPT
288	195-13-51	224.47'	272.05	CLPT
289	193-20-30	217.63'	272.55	CLPT
290	191-27-33	210.52'	273.05	CLPT
291	189-35-07	203.16'	273.55	CLPT
292	187-43-17	195.55'	274.05	CLPT
293	185-52-08	187.70'	274.55	CLPT
294	184-01-48	179.62'	275.05	CLPT
295	182-12-25	171.33'	275.55	CLPT
296	180-24-08	162.83'	276.05	CLPT
297	178-29-57	154.33'	276.51	CLPT
298	176-22-36	146.01'	276.90	CLPT
299	174-00-07	137.93'	277.22	CLPT
300	171-20-11	130.11'	277.46	CLPT
301	168-20-06	122.61'	277.63	CLPT
302	164-52-34	115.65'	277.72	CLPT
303	160-53-05	109.44'	277.74	CLPT
304	156-20-37	104.11'	277.68	CLPT
305	151-16-09	99.80'	277.56	CLPT
306	145-44-29	96.58'	277.35	CLPT
307	139-53-23	94.34'	277.11	CLPT
308	133-49-10	93.12'	276.87	CLPT
309	127-41-32	93.61'	276.64	CLPT
310	121-54-40	96.45'	276.40	CLPT
311	116-52-14	101.37'	276.16	CLPT
312	112-47-09	108.02'	275.92	CLPT
313	109-42-10	115.99'	275.68	CLPT
314	107-33-25	124.91'	275.44	CLPT
315	106-13-55	134.44'	275.23	CLPT
316	105-33-28	144.30'	275.08	CLPT
317	105-03-24	154.22'	274.99	CLPT
318	104-36-58	164.14'	274.97	CLPT
319	104-13-32	174.08'	275.00	CLPT
320	103-46-45	183.98'	275.10	CLPT
321	103-12-43	193.80'	275.25	CLPT
322	102-32-30	203.53'	275.43	CLPT
323	101-47-01	213.14'	275.57	CLPT
324	100-57-01	222.62'	275.65	CLPT
325	100-03-07	231.96'	275.68	CLPT
326	99-05-48	241.15'	275.66	CLPT
327	98-05-30	250.17'	275.58	CLPT
328	97-02-35	259.02'	275.45	CLPT
329	95-57-22	267.68'	275.28	CLPT
330	94-50-06	276.15'	275.10	CLPT
331	93-43-13	284.53'	274.92	CLPT
332	92-40-09	293.01'	274.76	CLPT
333	91-40-38	301.59'	274.66	CLPT
334	90-45-33	310.30'	274.60	CLPT
335	90-01-53	319.46'	274.59	CLPT
336	89-30-29	329.01'	274.63	CLPT
337	89-10-43	338.82'	274.72	CLPT
338	88-58-45	348.75'	274.86	CLPT
339	88-47-39	358.68'	275.05	CLPT
340	88-40-42	365.20'		CLPT

U.S. DEPARTMENT OF TRANSPORTATION
FEDERAL HIGHWAY ADMINISTRATION
EASTERN FEDERAL LANDS HIGHWAY DIVISION
STERLING, VIRGINIA

Vicksburg National Military Park

KENTUCKY MONUMENT SIDEWALK PLAN

STA. 0+32 TO 6+75

0 25 50
SCALE IN FEET

5/20/2008 12:42:51 \\Server2004\projects\CIVILTECH\JOBS\CADD\07-008\Design\022206\G-VICKIGII_pln.dgn

NPS NO.	REG	STATE	PROJECT	SHEET NO.
306 / 41,918	SE	MS	PRA-VICK 10(2),12(2),19(1)	H1

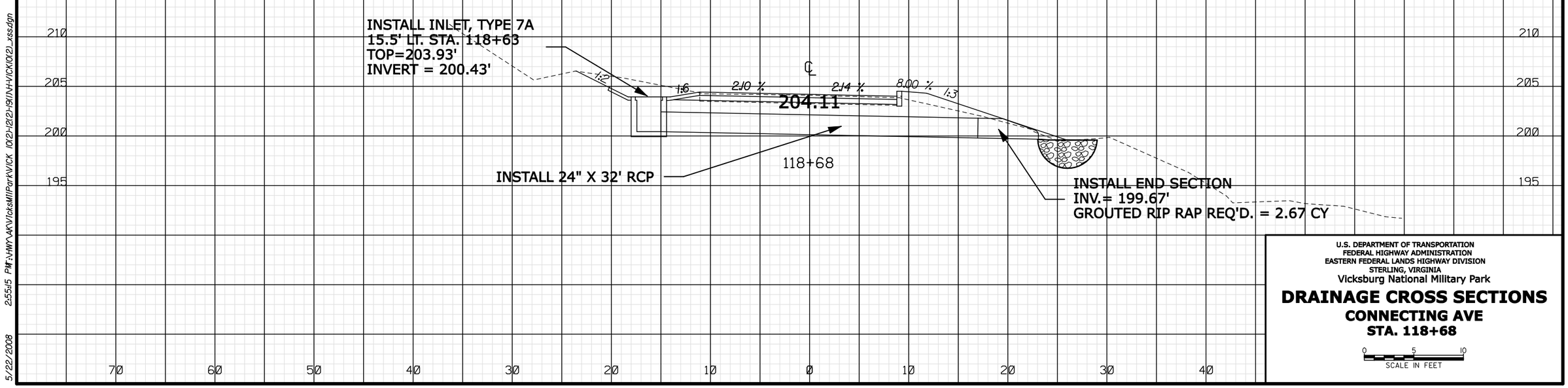

U.S. DEPARTMENT OF TRANSPORTATION
FEDERAL HIGHWAY ADMINISTRATION
EASTERN FEDERAL LANDS HIGHWAY DIVISION
STERLING, VIRGINIA

Vicksburg National Military Park

DRAINAGE CROSS SECTIONS
CONNECTING AVE
STA. 118+68

0 5 10
SCALE IN FEET

5/22/2008 2:55:15 PM F:\HMY\AKV\Vicksburg\ParkV\ICK 10(2)-12(2)-19(1)\H-V\ICK10(2)_xss.dgn

NPS NO.	REG	STATE	PROJECT	SHEET NO.
306 41,918	SE	MS	PRA-VICK 10(2),12(2),19(1)	H2

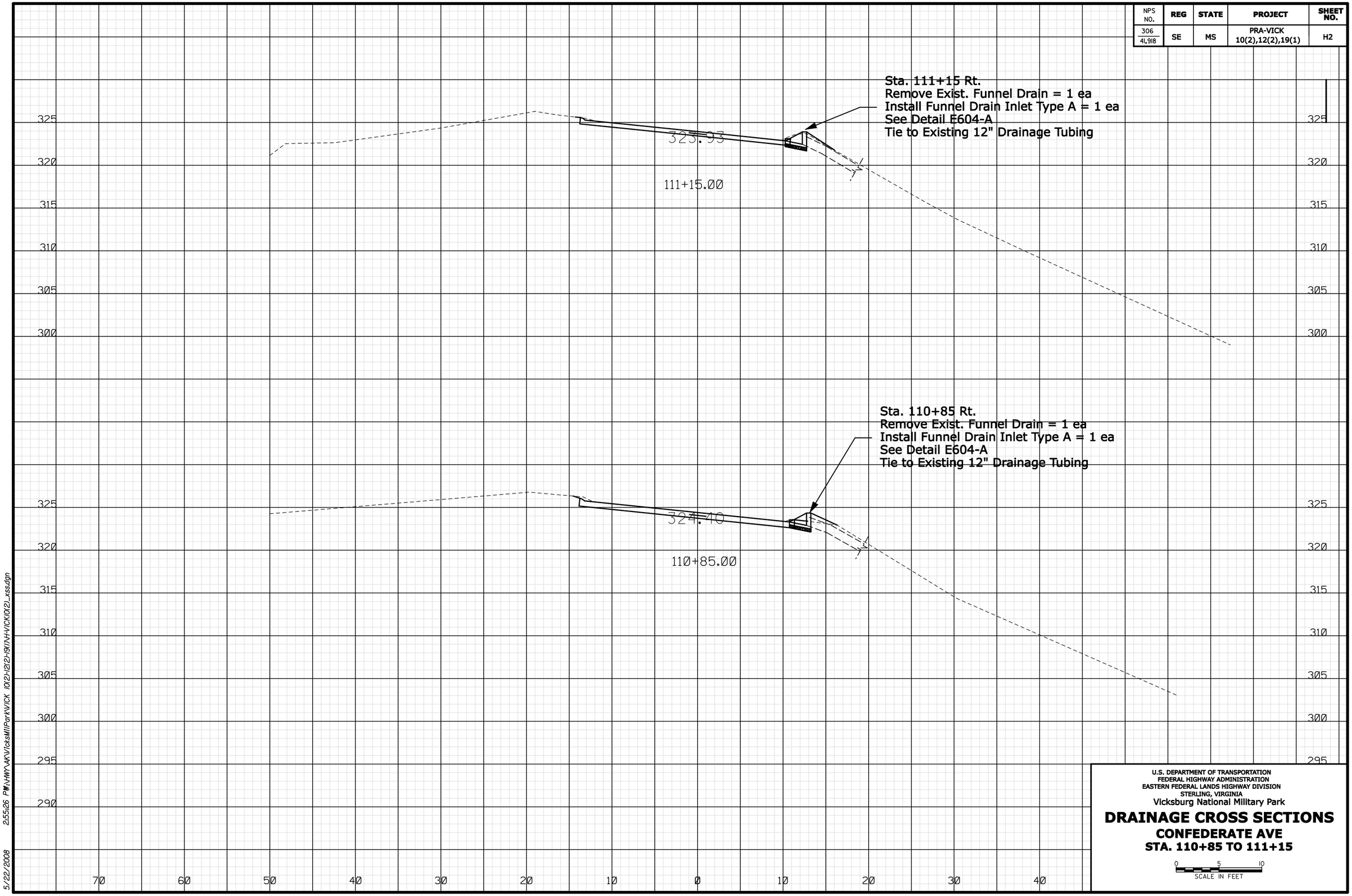

U.S. DEPARTMENT OF TRANSPORTATION
FEDERAL HIGHWAY ADMINISTRATION
EASTERN FEDERAL LANDS HIGHWAY DIVISION
STERLING, VIRGINIA

Vicksburg National Military Park

DRAINAGE CROSS SECTIONS

CONFEDERATE AVE

STA. 110+85 TO 111+15

0 5 10
SCALE IN FEET

5/22/2008 2:55:26 PM:\\HWY\AKV\VicksMilPark\VICK_10(2)+12(2)+19(1)\H+VICK10(2)_xss.dgn

NPS NO.	REG	STATE	PROJECT	SHEET NO.
306 41,918	SE	MS	PRA-VICK 10(2),12(2),19(1)	H3

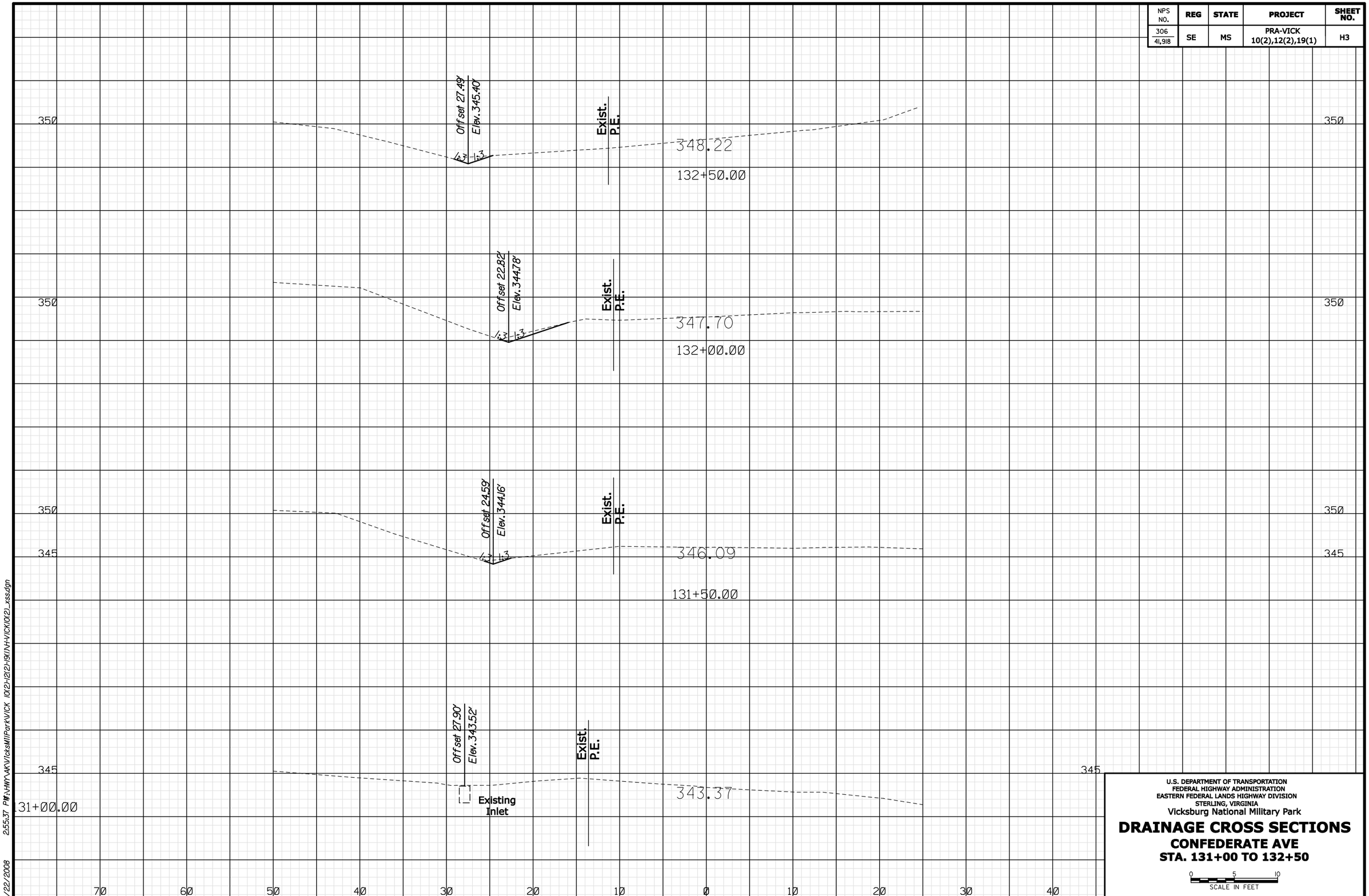

U.S. DEPARTMENT OF TRANSPORTATION
FEDERAL HIGHWAY ADMINISTRATION
EASTERN FEDERAL LANDS HIGHWAY DIVISION
STERLING, VIRGINIA

Vicksburg National Military Park

DRAINAGE CROSS SECTIONS
CONFEDERATE AVE
STA. 131+00 TO 132+50

0 5 10
SCALE IN FEET

5/22/2008 2:55:37 PM P:\HMM\AKV\VicksMilPark\VICK 10(2)\12(2)\19(1)\H\VICK10(2)_xss.dgn

NPS NO.	REG	STATE	PROJECT	SHEET NO.
306 41,918	SE	MS	PRA-VICK 10(2),12(2),19(1)	H4

NOTES:

1. *Maximum amout of fill allowed over flexible drainage pipe will be 1'.*

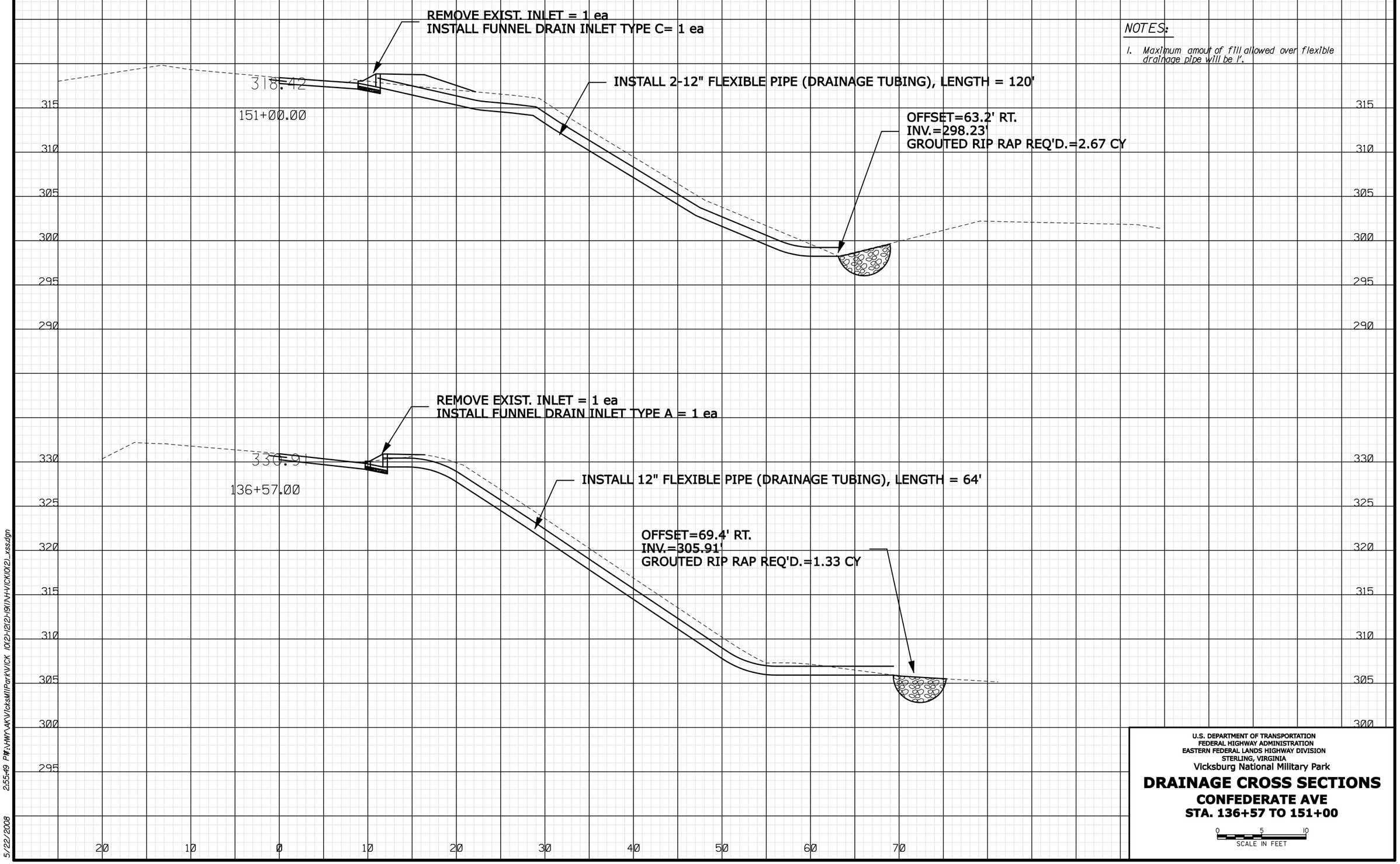

U.S. DEPARTMENT OF TRANSPORTATION
FEDERAL HIGHWAY ADMINISTRATION
EASTERN FEDERAL LANDS HIGHWAY DIVISION
STERLING, VIRGINIA

Vicksburg National Military Park

DRAINAGE CROSS SECTIONS

CONFEDERATE AVE

STA. 136+57 TO 151+00

0 5 10
SCALE IN FEET

5/22/2008 2:55:49 PM f:\HMY\AKV\VicksMilPark\VICK 10(2)-12(2)-19(1)\H-VICK10(2)_xss.dgn

NPS NO.	REG	STATE	PROJECT	SHEET NO.
306 41,918	SE	MS	PRA-VICK 10(2),12(2),19(1)	H5

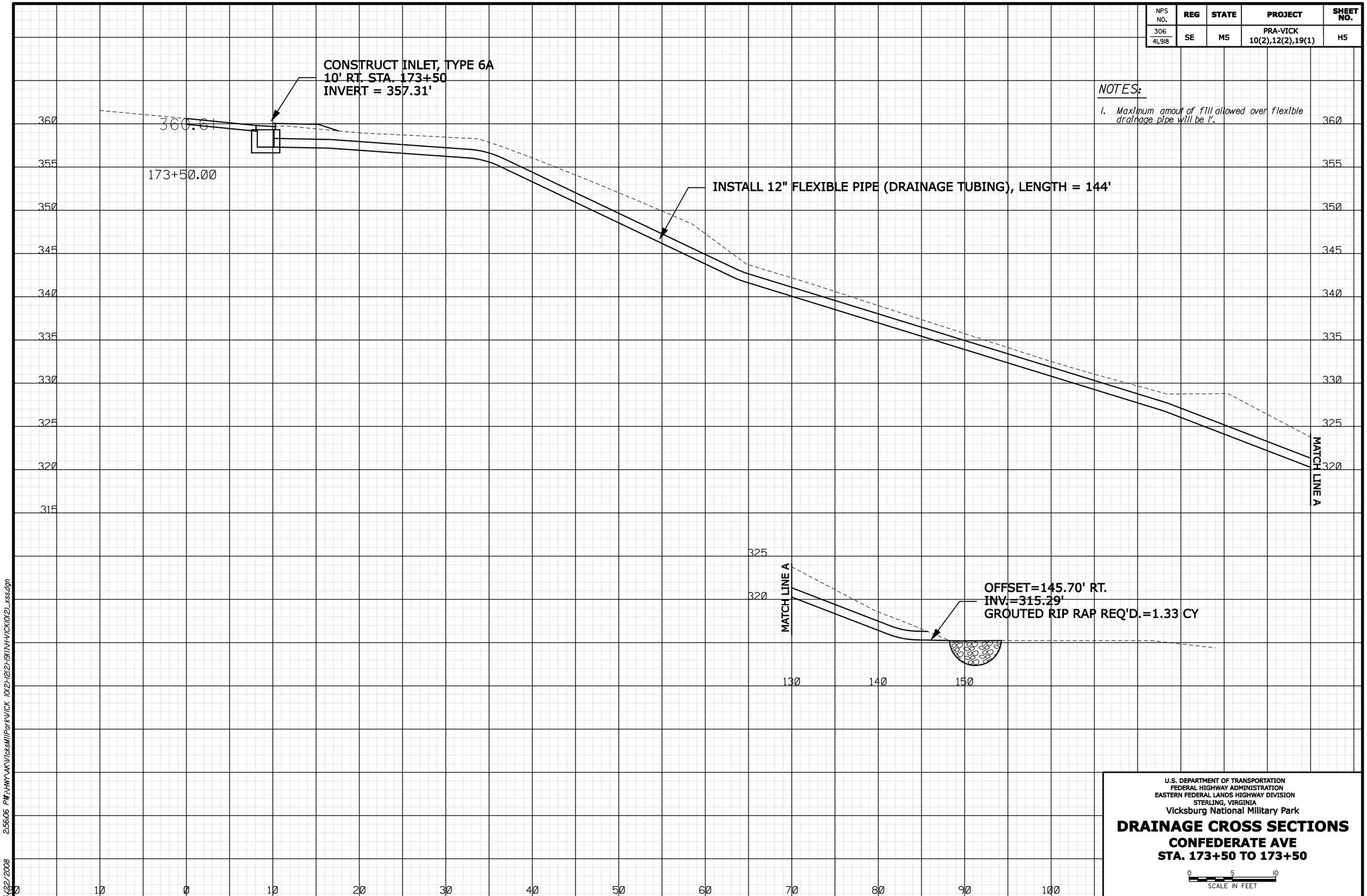

NOTES:

1. Maximum amout of fill allowed over flexible drainage pipe will be 1'.

U.S. DEPARTMENT OF TRANSPORTATION
FEDERAL HIGHWAY ADMINISTRATION
EASTERN FEDERAL LANDS HIGHWAY DIVISION
STERLING, VIRGINIA

Vicksburg National Military Park

DRAINAGE CROSS SECTIONS

CONFEDERATE AVE
STA. 173+50 TO 173+50

0 5 10
SCALE IN FEET

5/22/2008 2:56:06 P:\FLHW\MA\Vicksburg\Park\VICK 10(2)-12(2)-19(1)\H-VICK(10(2)_xss.dgn

NPS NO.	REG	STATE	PROJECT	SHEET NO.
306 41,918	SE	MS	PRA-VICK 10(2),12(2),19(1)	H6

NOTES:

1. Maximum amout of fill allowed over flexible drainage pipe will be 1'.

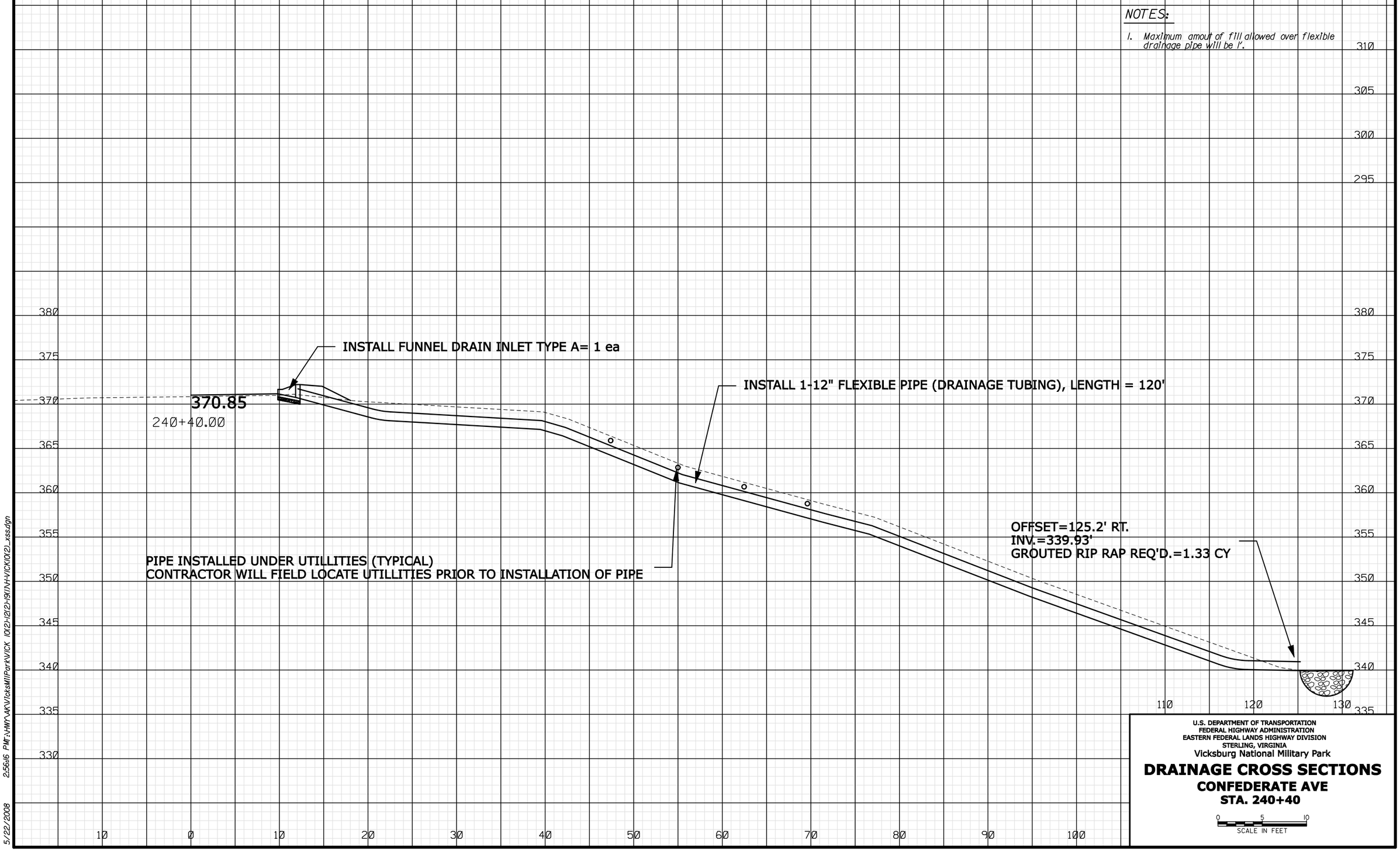

U.S. DEPARTMENT OF TRANSPORTATION
FEDERAL HIGHWAY ADMINISTRATION
EASTERN FEDERAL LANDS HIGHWAY DIVISION
STERLING, VIRGINIA

Vicksburg National Military Park

DRAINAGE CROSS SECTIONS

CONFEDERATE AVE

STA. 240+40

0 5 10
SCALE IN FEET

5/22/2008 2:56:16 PM F:\HWY\AK\VicksMilPark\VICK 10(2)-12(2)-19(1)\H-\VICK10(2)_xss.dgn

NPS NO.	REG	STATE	PROJECT	SHEET NO.
306 41,918	SE	MS	PRA-VICK 10(2),12(2),19(1)	H7

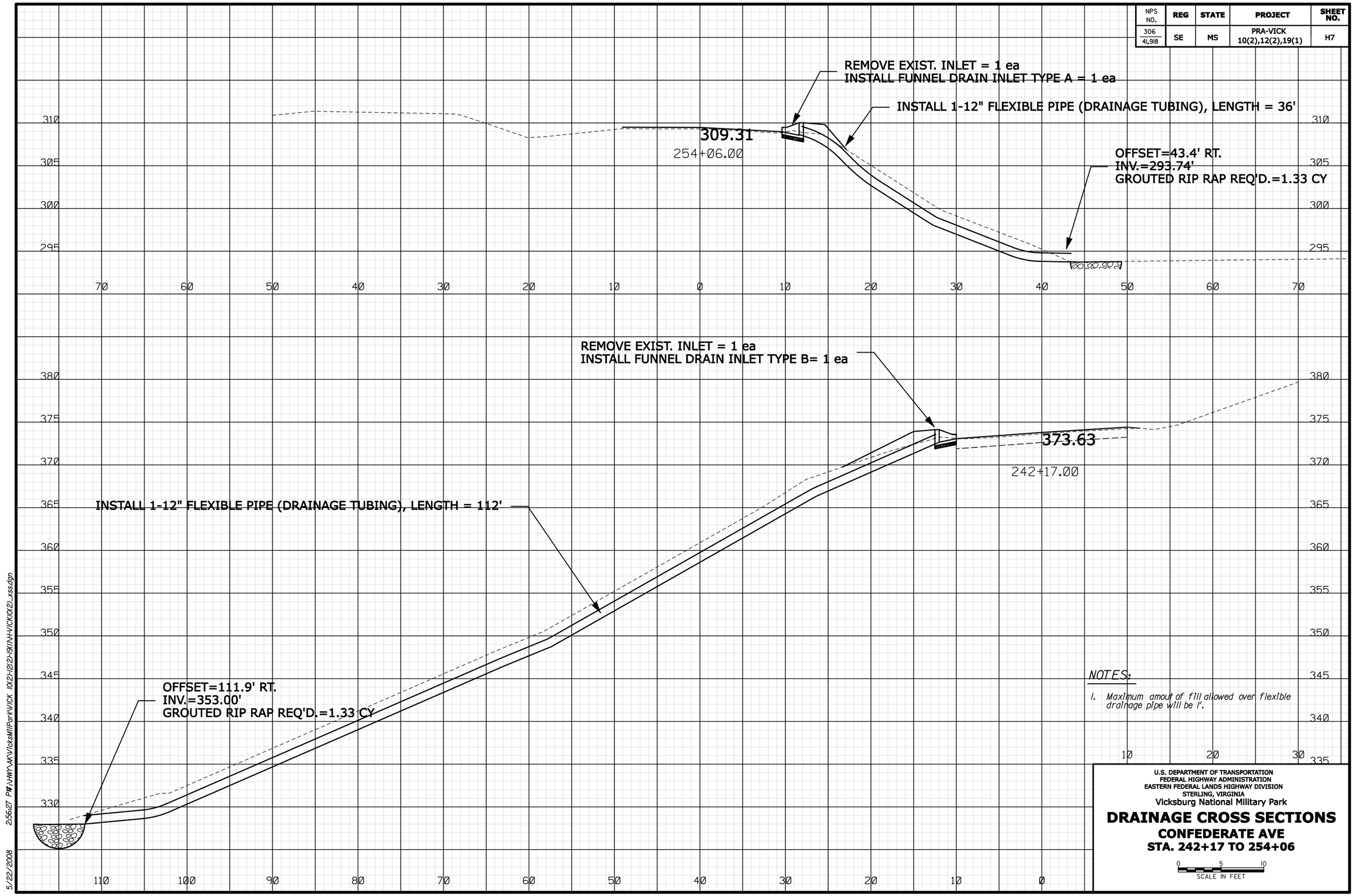

NPS NO.	REG	STATE	PROJECT	SHEET NO.
306 41,918	SE	MS	PRA-VICK 10(2),12(2),19(1)	H8

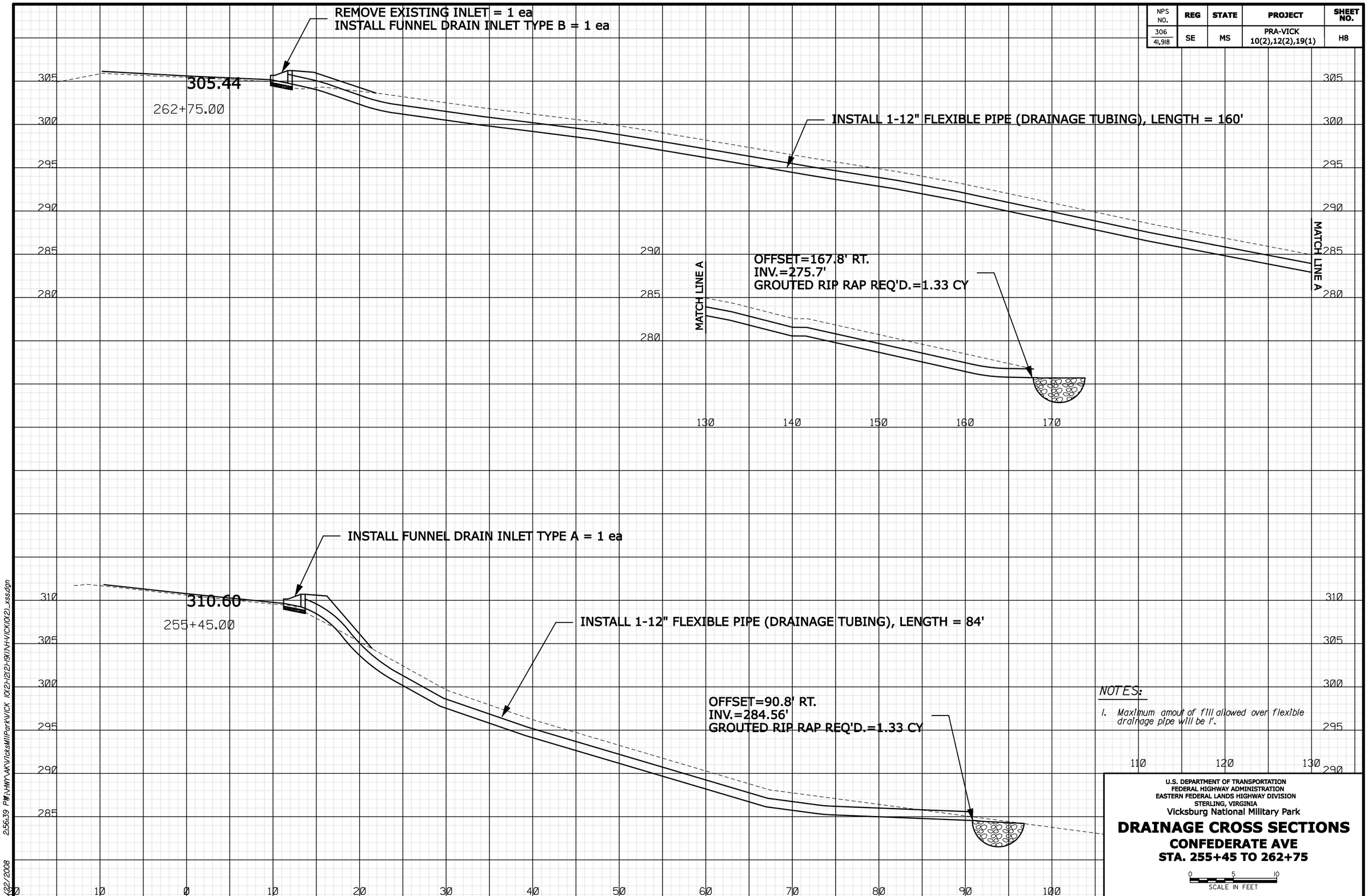

NPS NO.	REG	STATE	PROJECT	SHEET NO.
306 41,918	SE	MS	PRA-VICK 10(2),12(2),19(1)	H9

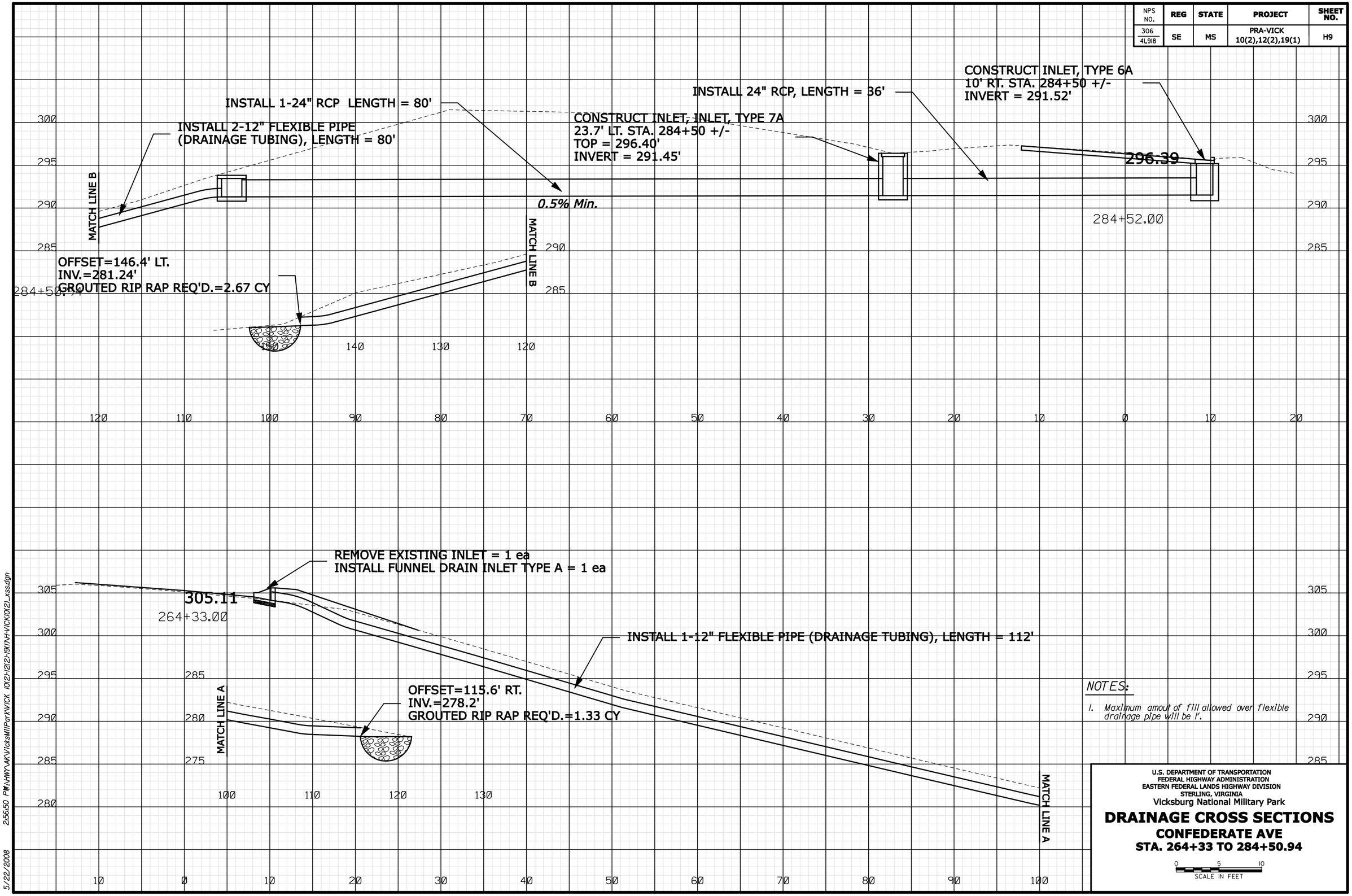

NOTES:

1. Maximum amout of fill allowed over flexible drainage pipe will be 1'.

U.S. DEPARTMENT OF TRANSPORTATION
FEDERAL HIGHWAY ADMINISTRATION
EASTERN FEDERAL LANDS HIGHWAY DIVISION
STERLING, VIRGINIA

Vicksburg National Military Park

DRAINAGE CROSS SECTIONS

CONFEDERATE AVE

STA. 264+33 TO 284+50.94

0 5 10
SCALE IN FEET

5/22/2008 2:56:50 PM:\\HWY\AK\Vicksburg\Park\Vick 10(2)\12(2)\H9(1)\H-Vick\0(2)_xss.dgn

NPS NO.	REG	STATE	PROJECT	SHEET NO.
306 41,918	SE	MS	PRA-VICK 10(2),12(2),19(1)	H10

NOTES:

1. *Maximum amout of fill allowed over flexible drainage pipe will be 1'.*

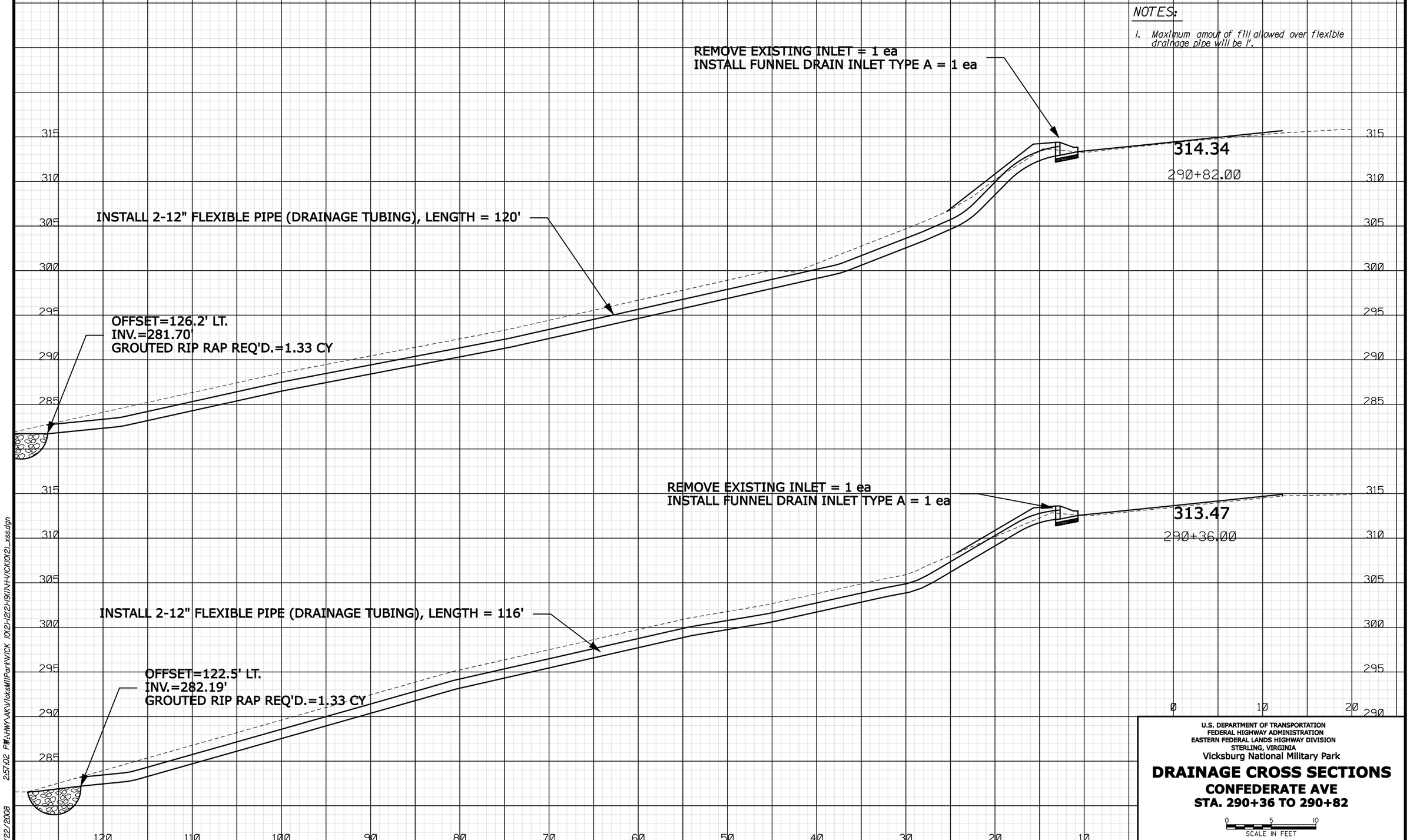

U.S. DEPARTMENT OF TRANSPORTATION
FEDERAL HIGHWAY ADMINISTRATION
EASTERN FEDERAL LANDS HIGHWAY DIVISION
STERLING, VIRGINIA

Vicksburg National Military Park

DRAINAGE CROSS SECTIONS

CONFEDERATE AVE

STA. 290+36 TO 290+82

0 5 10
SCALE IN FEET

5/22/2008 2:57:02 PM P:\HMP\AKV\ticksMilPark\VICK 10(2)-12(2)-19(1)\H-VICK10(2)_xss.dgn

NPS NO.	REG	STATE	PROJECT	SHEET NO.
306 / 41,918	SE	MS	PRA-VICK 10(2),12(2),19(1)	H11

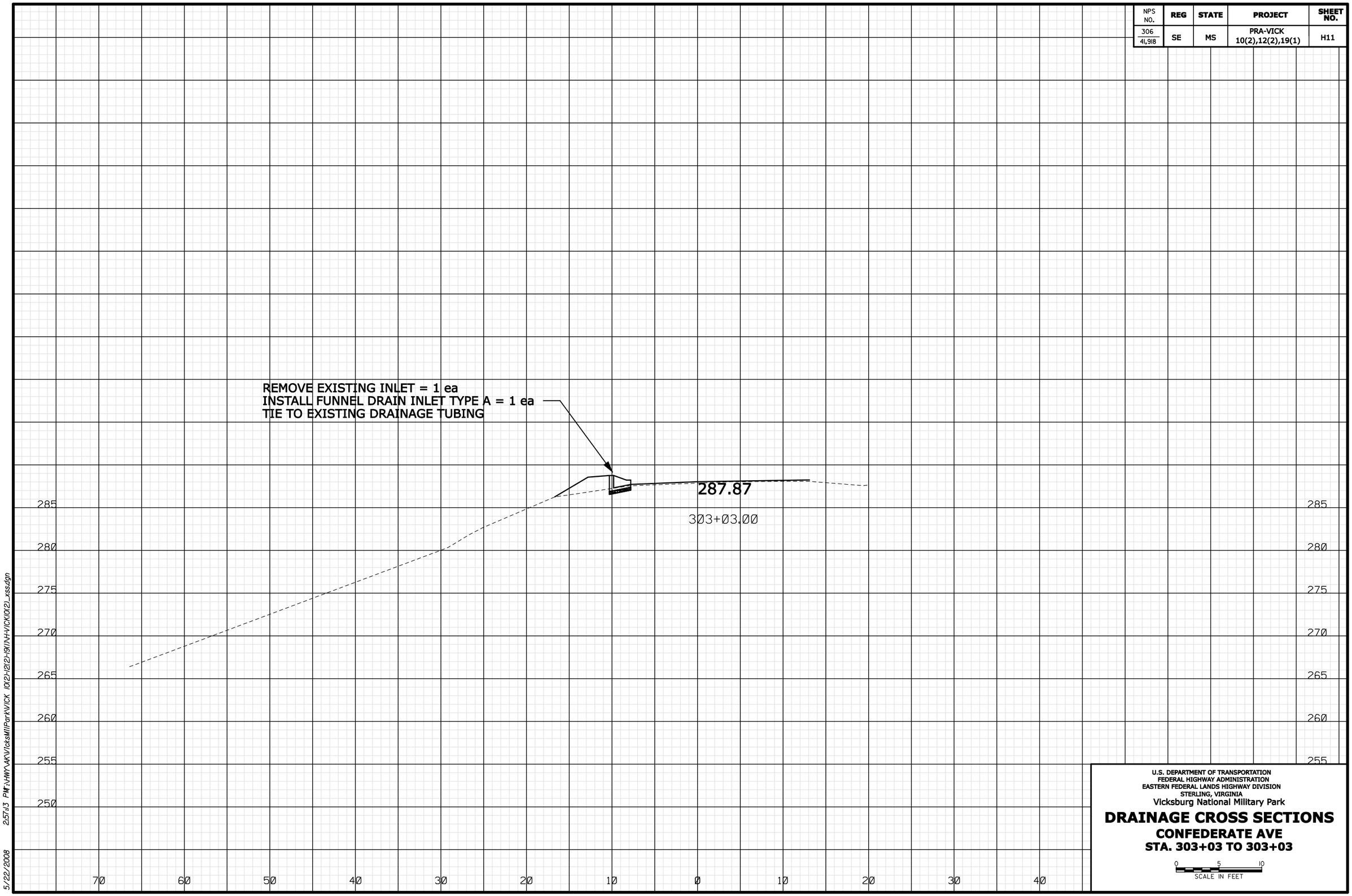

U.S. DEPARTMENT OF TRANSPORTATION
FEDERAL HIGHWAY ADMINISTRATION
EASTERN FEDERAL LANDS HIGHWAY DIVISION
STERLING, VIRGINIA
Vicksburg National Military Park

DRAINAGE CROSS SECTIONS
CONFEDERATE AVE
STA. 303+03 TO 303+03

0 5 10
SCALE IN FEET

5/22/2008 2:57:13 PM F:\WWW\AK\VicksMilPark\VICK 10(2)-12(2)-19(1)\H-VICK10(2)_xss.dgn

NPS NO.	REG	STATE	PROJECT	SHEET NO.
306 / 41,918	SE	MS	PRA-VICK 10(2),12(2),19(1)	H12

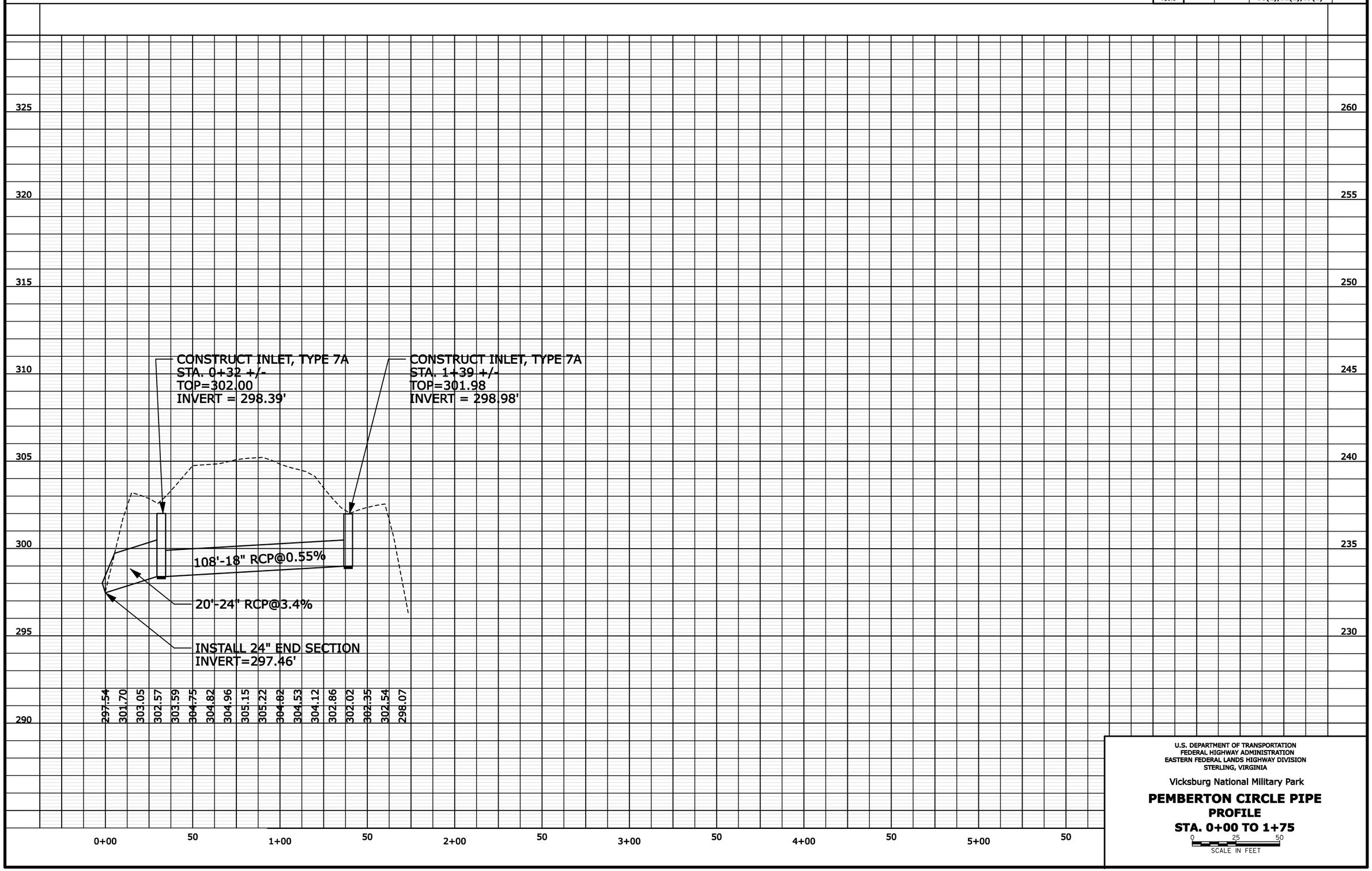

U.S. DEPARTMENT OF TRANSPORTATION
FEDERAL HIGHWAY ADMINISTRATION
EASTERN FEDERAL LANDS HIGHWAY DIVISION
STERLING, VIRGINIA

Vicksburg National Military Park

PEMBERTON CIRCLE PIPE PROFILE

STA. 0+00 TO 1+75

0 25 50
SCALE IN FEET

NPS NO.	REG	STATE	PROJECT	SHEET NO.
306 41,918	SE	MS	PRA-VICK 10(2),12(2),19(1)	H13

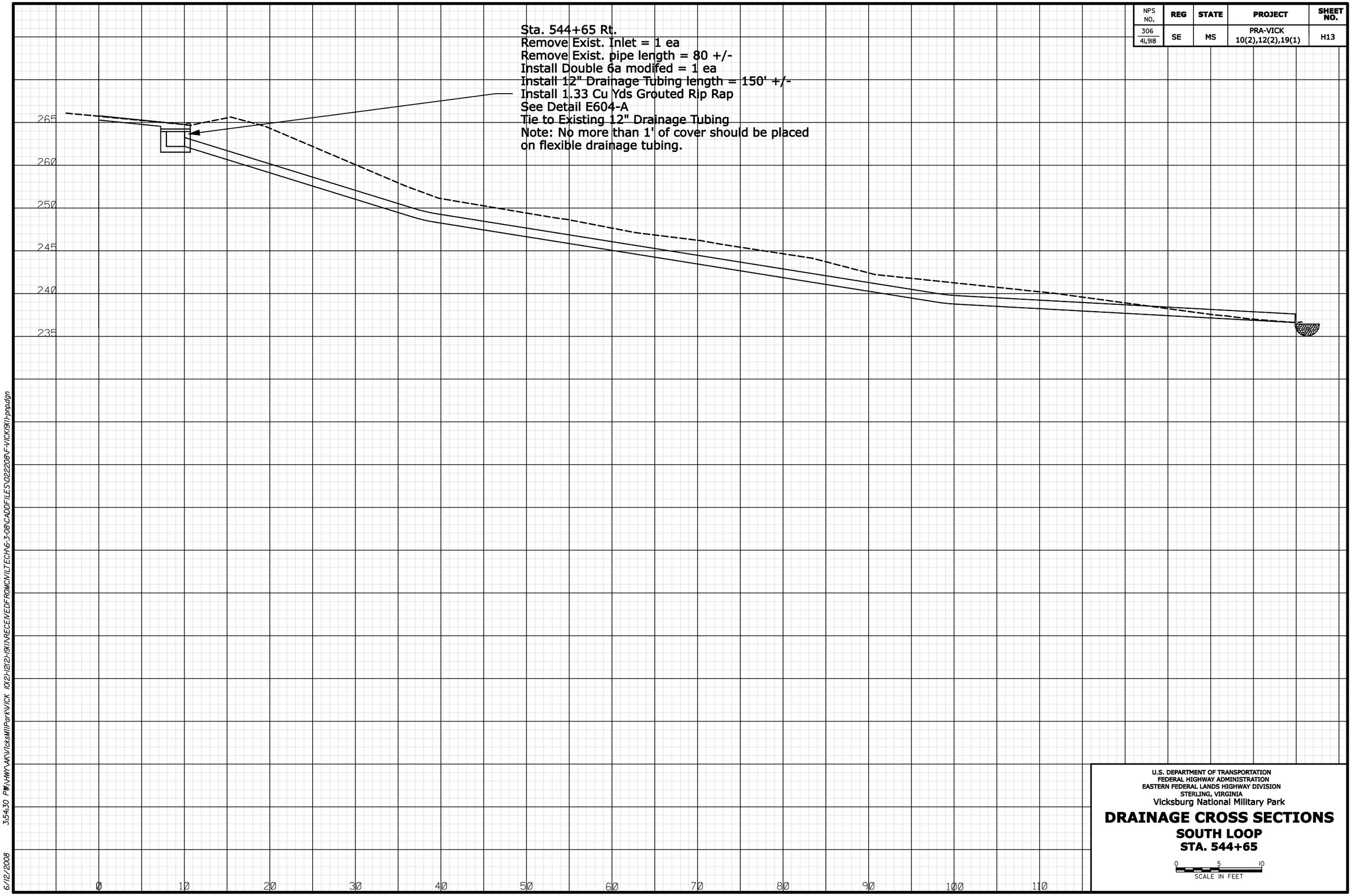

U.S. DEPARTMENT OF TRANSPORTATION
FEDERAL HIGHWAY ADMINISTRATION
EASTERN FEDERAL LANDS HIGHWAY DIVISION
STERLING, VIRGINIA

Vicksburg National Military Park

DRAINAGE CROSS SECTIONS
SOUTH LOOP
STA. 544+65

0 5 10
SCALE IN FEET

6/12/2008 3:54:30 PM:\VMW\AKV\VicksMilPark\VICK 10(2)-12(2)-19(1)\RECEIVEDFROMCIV\LTECH\6-3-08\CADDFILES\022208\F-VICK19(1)-ppp.dgn

NPS NO.	REG	STATE	PROJECT	SHEET NO.
306 / 41,918	SE	MS	PRA-VICK 10(2),12(2),19(1)	I1

Curve = LRGRVRD-1
PI 10+39.07
Δ= 62° 18' 14" (LT)
R = 45.00'
T = 27.20'
L = 48.93'

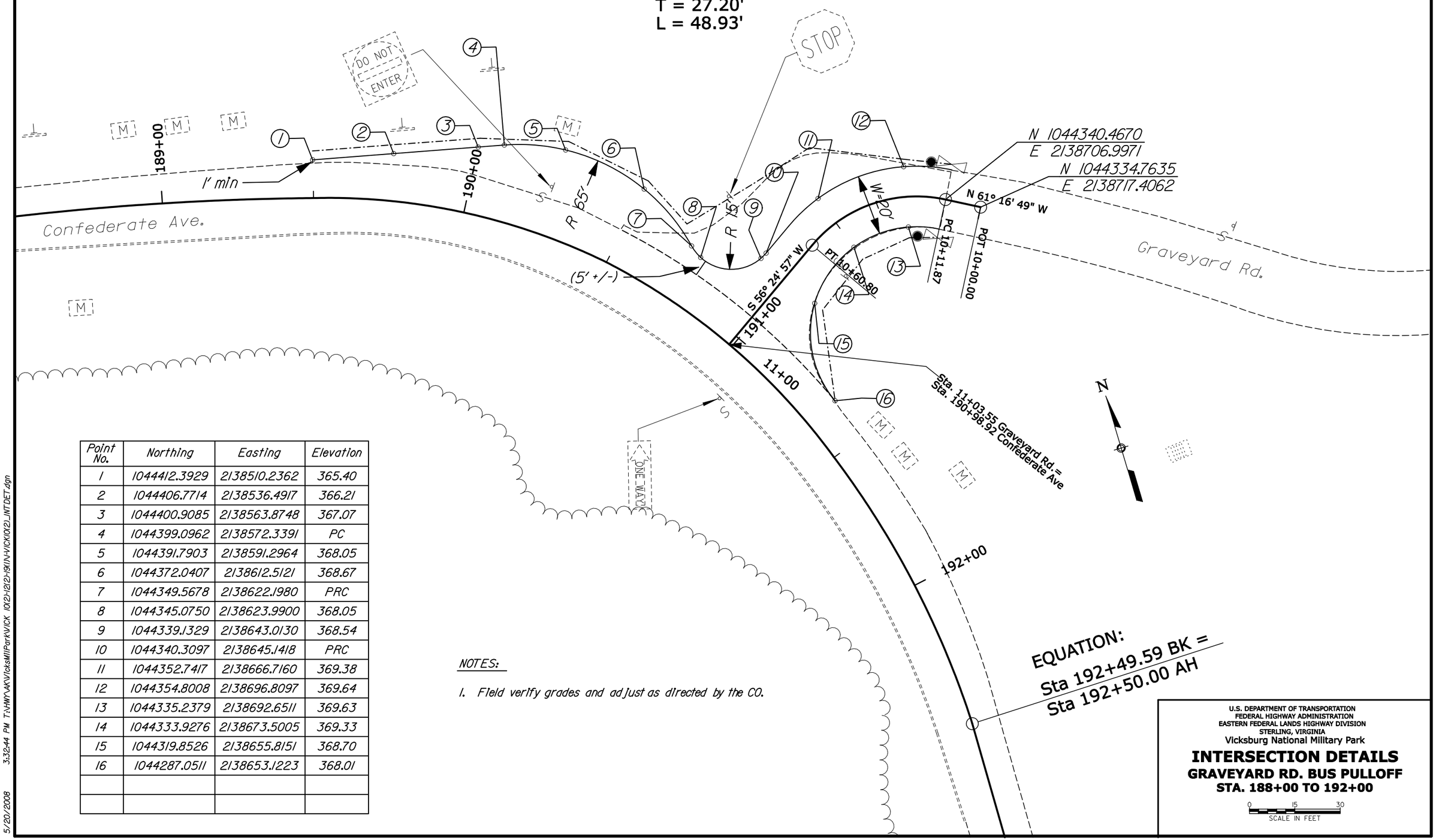

Point No.	Northing	Easting	Elevation
1	1044412.3929	2138510.2362	365.40
2	1044406.7714	2138536.4917	366.21
3	1044400.9085	2138563.8748	367.07
4	1044399.0962	2138572.3391	PC
5	1044391.7903	2138591.2964	368.05
6	1044372.0407	2138612.5121	368.67
7	1044349.5678	2138622.1980	PRC
8	1044345.0750	2138623.9900	368.05
9	1044339.1329	2138643.0130	368.54
10	1044340.3097	2138645.1418	PRC
11	1044352.7417	2138666.7160	369.38
12	1044354.8008	2138696.8097	369.64
13	1044335.2379	2138692.6511	369.63
14	1044333.9276	2138673.5005	369.33
15	1044319.8526	2138655.8151	368.70
16	1044287.0511	2138653.1223	368.01

NOTES:

1. Field verify grades and adjust as directed by the CO.

U.S. DEPARTMENT OF TRANSPORTATION
FEDERAL HIGHWAY ADMINISTRATION
EASTERN FEDERAL LANDS HIGHWAY DIVISION
STERLING, VIRGINIA
Vicksburg National Military Park

INTERSECTION DETAILS
GRAVEYARD RD. BUS PULLOFF
STA. 188+00 TO 192+00

0 15 30
SCALE IN FEET

5/20/2008 3:32:44 PM T:\HWY\AKV\VicksMilPark\VICK 10(2)-12(2)-19(1)\V1\VICK10(2)_INTDET.dgn

NPS NO.	REG	STATE	PROJECT	SHEET NO.
306 / 41,918	SE	MS	PRA-VICK 10(2),12(2),19(1)	I-2

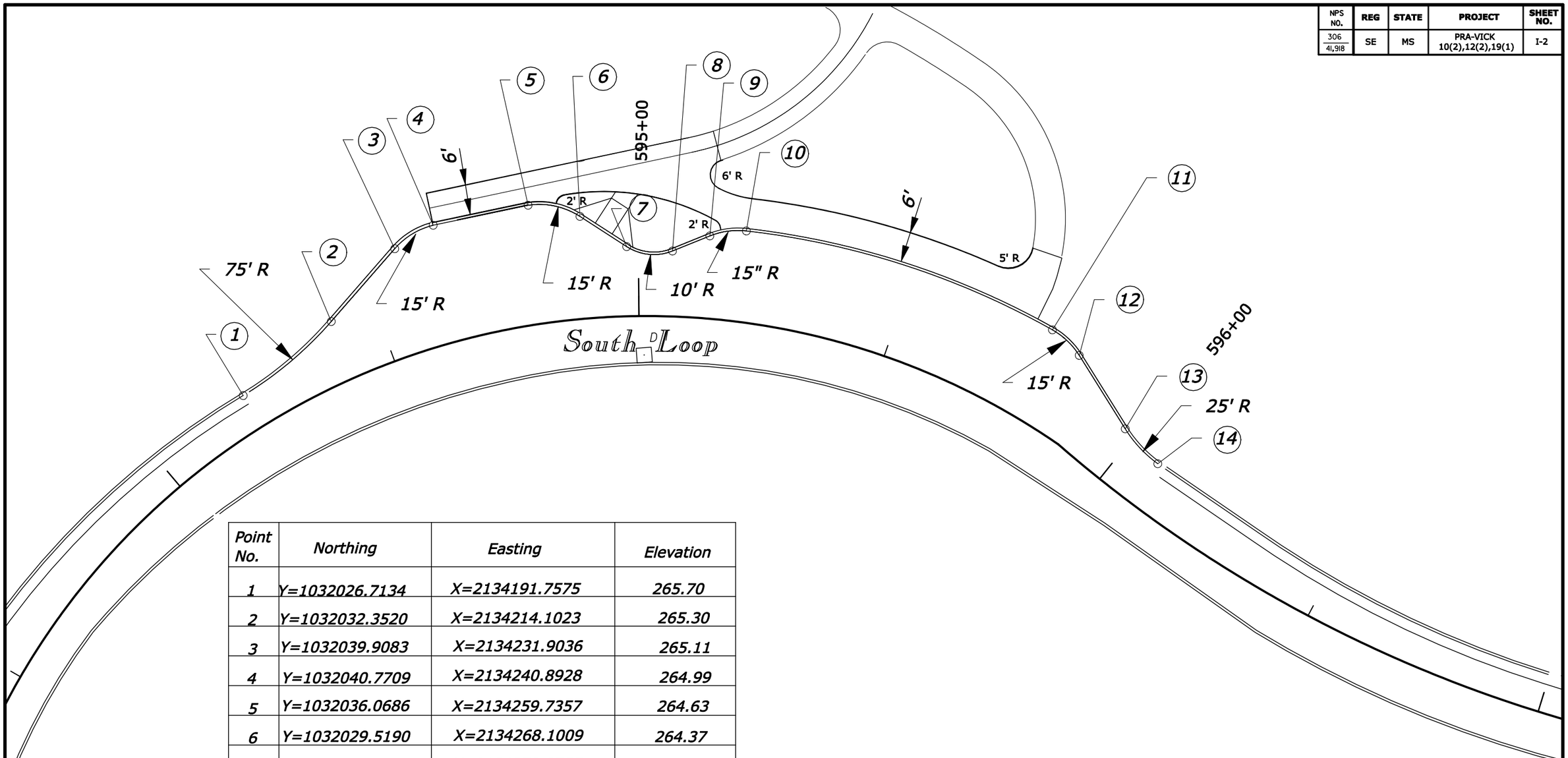

Point No.	Northing	Easting	Elevation
1	Y=1032026.7134	X=2134191.7575	265.70
2	Y=1032032.3520	X=2134214.1023	265.30
3	Y=1032039.9083	X=2134231.9036	265.11
4	Y=1032040.7709	X=2134240.8928	264.99
5	Y=1032036.0686	X=2134259.7357	264.63
6	Y=1032029.5190	X=2134268.1009	264.37
7	Y=1032019.9837	X=2134273.8755	264.06
8	Y=1032015.1875	X=2134281.7424	263.93
9	Y=1032014.6333	X=2134289.7929	263.92
10	Y=1032012.3312	X=2134296.8039	263.88
11	Y=1031967.7356	X=2134343.2841	263.20
12	Y=1031960.7814	X=2134345.8791	263.02
13	Y=1031943.5197	X=2134347.7356	262.66
14	Y=1031934.3955	X=2134350.5509	262.49

NOTES:

1. Field verify grades and adjust as directed by the CO.

U.S. DEPARTMENT OF TRANSPORTATION
FEDERAL HIGHWAY ADMINISTRATION
EASTERN FEDERAL LANDS HIGHWAY DIVISION
STERLING, VIRGINIA

Vicksburg National Military Park

INTERSECTION DETAILS

KENTUCKY MONUMENT PULLOFF

STA. 594+20 TO 597+07

0 10 20
SCALE IN FEET

NPS NO.	REG	STATE	PROJECT	SHEET NO.
306 / 41,918	SE	MS	PRA-VICK 10(2),12(2),19(1)	M01

1. GENERAL GUIDELINES

The Erosion Control Plan (ECP) is meant as a guideline for preventing erosion and controlling sediment. Install all erosion sediment control devices as shown in the plans or as directed by the Contracting Officer (CO). Do not modify the type, size or location of any control or practice without approval from the CO.

Inspect all erosion and sediment control devices once every seven calendar days and within 24 hours after any storm event of greater than 0.5 inches. Repair devices (silt fence) when they become half full of sediment or as directed by the CO. Dispose of sediment by spreading on the site at locations approved by the CO, or by hauling offsite.

Preventing initial soil erosion is much more effective than trying to control eroded sediment. Therefore, stabilize all disturbed areas as soon as practical, but no more than 14 days after construction activity has temporarily or permanently ceased. Stabilization will be in the form of permanent turf establishment.

Do not allow construction vehicles to track sediment offsite of the project limits.

Vegetation should be preserved as much as possible. If overhanging trees must be removed, they should be cut near the ground level, leaving the stump and roots in the bank for stability and to possibly sprout.

In general, do not disturb or clear areas located outside the limits of work indicated on the plans, preserve existing vegetation, trees and shrubs when possible, and where specifically shown in the plans or as directed by the CO.

2. EROSION AND SEDIMENT CONTROL

A. ESTABLISH PERIMETER CONTROLS

Prior to any clearing, grubbing and excavation, construct termporary silt fence to ensure that disturbed sediment does not leave the project site.

B. FINAL CONTROLS/STABILIZATION

After completion of roadway construction and landscaping, do the following as directed by the CO:

Finish grading, pave and apply permanent turf establishment to any remaining disturbed areas which have not revceifed final seeding and mulch.

Remove silt fence only after all upslope areas are stabilized and vegetation is well established and after obtaining approval from the CO.

U.S. DEPARTMENT OF TRANSPORTATION
FEDERAL HIGHWAY ADMINISTRATION
EASTERN FEDERAL LANDS HIGHWAY DIVISION
STERLING, VIRGINIA

Vicksburg National Military Park

EROSION CONTROL NARRATIVE

5/20/2008 3:30:40 PM T:\HWY\AK\VicksMilPark\VICK 10(2)-12(2)-19(1)\M-V(CK10(2)_EROS.dgn

NPS NO.	REG	STATE	PROJECT	SHEET NO.
306 / 41,918	SE	MS	PRA-VICK 10(2),12(2),19(1)	M02

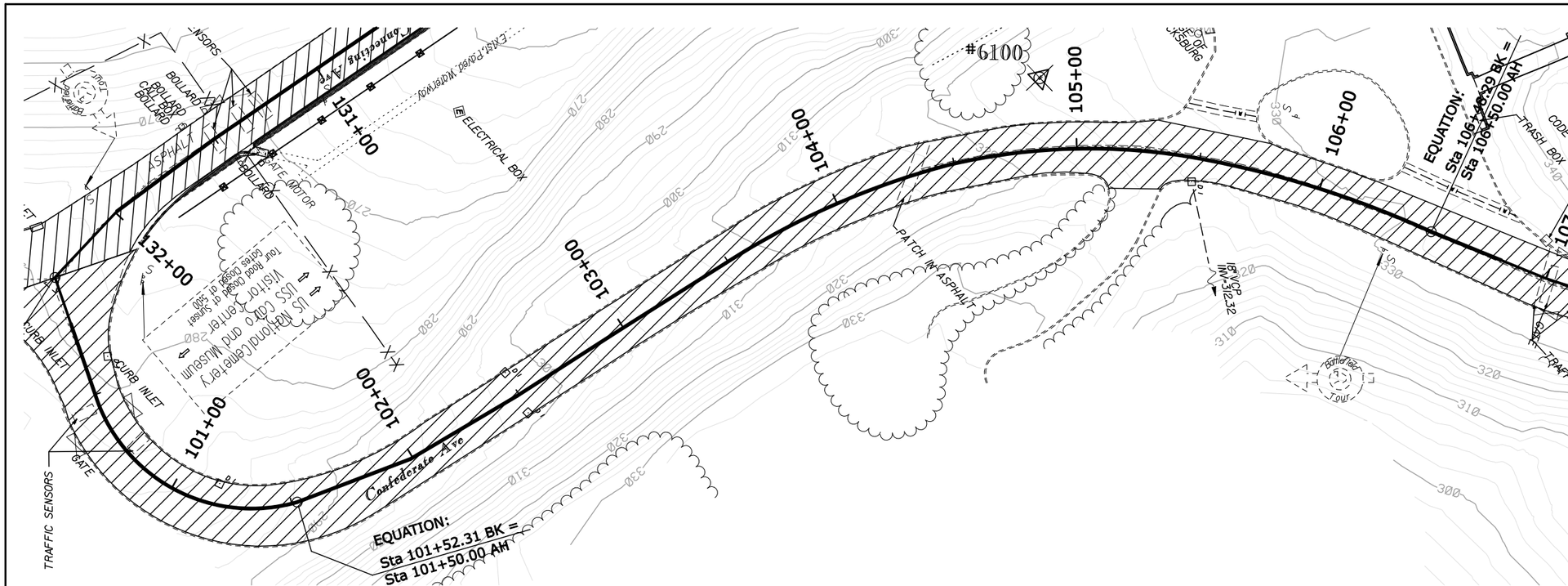

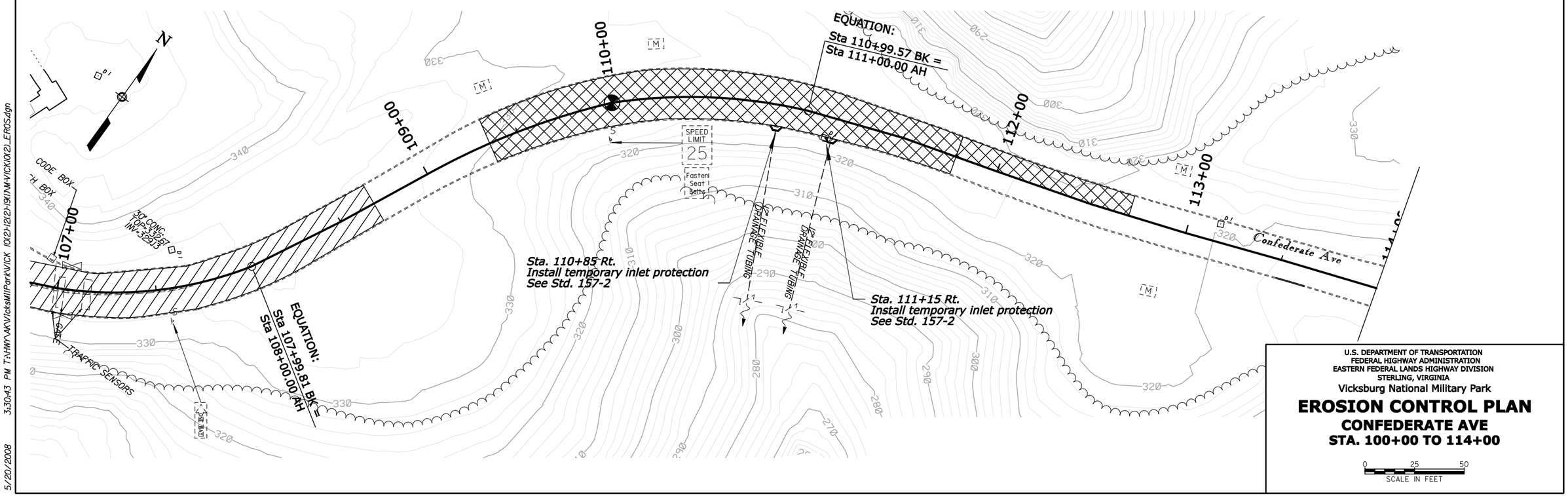

U.S. DEPARTMENT OF TRANSPORTATION
FEDERAL HIGHWAY ADMINISTRATION
EASTERN FEDERAL LANDS HIGHWAY DIVISION
STERLING, VIRGINIA

Vicksburg National Military Park

EROSION CONTROL PLAN

CONFEDERATE AVE
STA. 100+00 TO 114+00

0 25 50
SCALE IN FEET

5/20/2008 3:30:43 PM T:\HWY\AK\Vicksburg\ParkVICK 10(2)-12(2)-19(1)\M-VICK10(2)_EROS.dgn

NPS NO.	REG	STATE	PROJECT	SHEET NO.
306 / 41,918	SE	MS	PRA-VICK 10(2),12(2),19(1)	M03

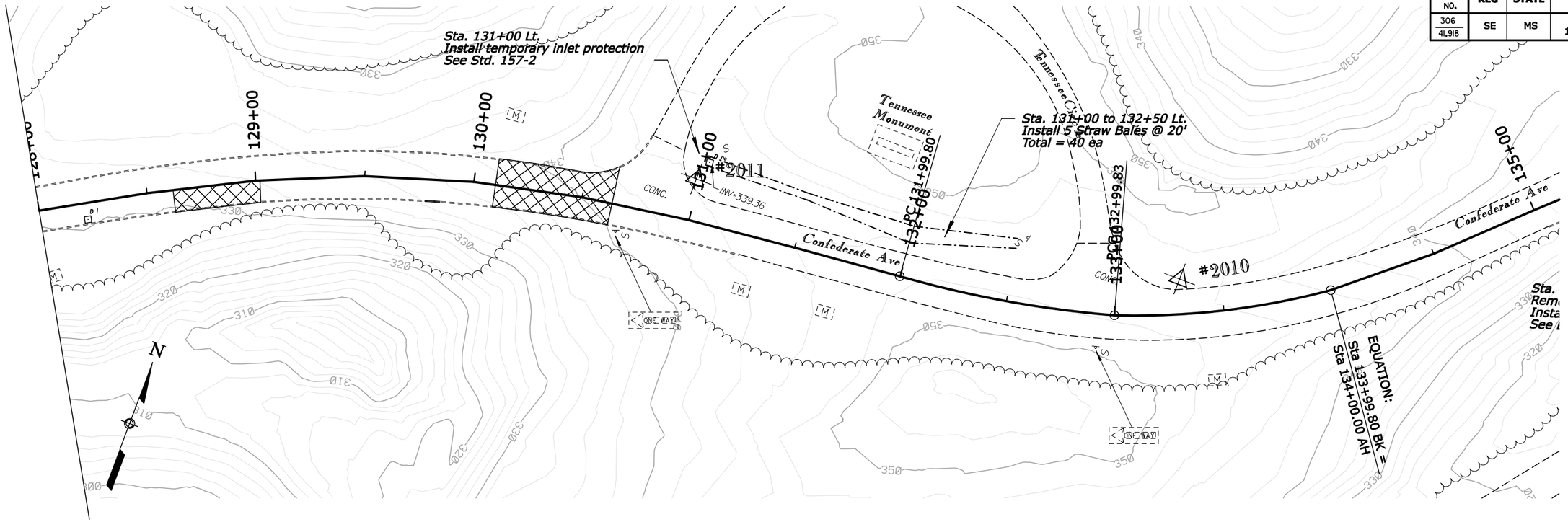

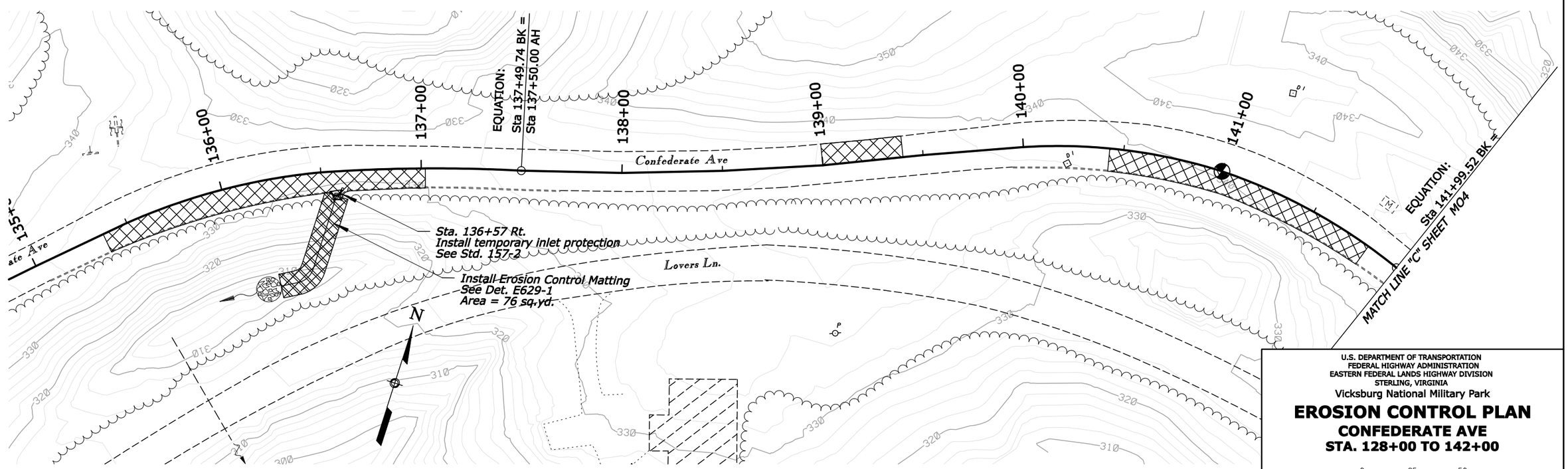

U.S. DEPARTMENT OF TRANSPORTATION
FEDERAL HIGHWAY ADMINISTRATION
EASTERN FEDERAL LANDS HIGHWAY DIVISION
STERLING, VIRGINIA

Vicksburg National Military Park

EROSION CONTROL PLAN

CONFEDERATE AVE
STA. 128+00 TO 142+00

0 25 50
SCALE IN FEET

5/20/2008 3:30:45 PM T:\HWY\AK\Vicksburg\ParkV\ICK (0(2)-12(2)-19)\INV-VICK(0(2)_EROS.dgn

NPS NO.	REG	STATE	PROJECT	SHEET NO.
306 / 41,918	SE	MS	PRA-VICK 10(2),12(2),19(1)	M04

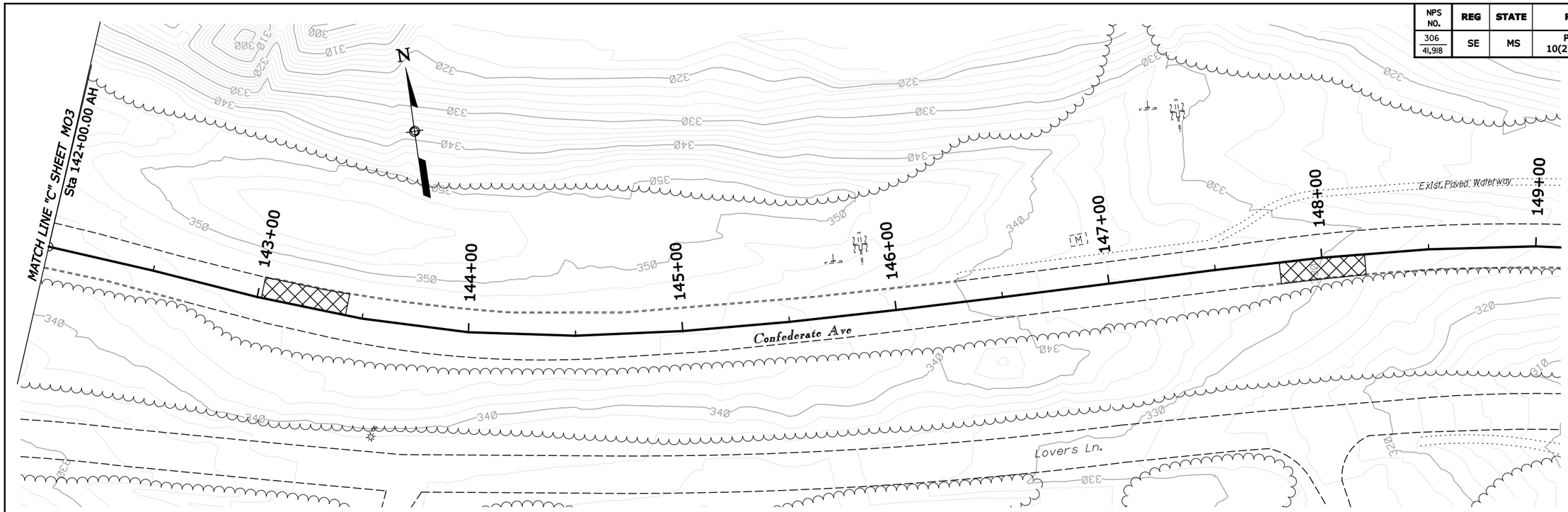

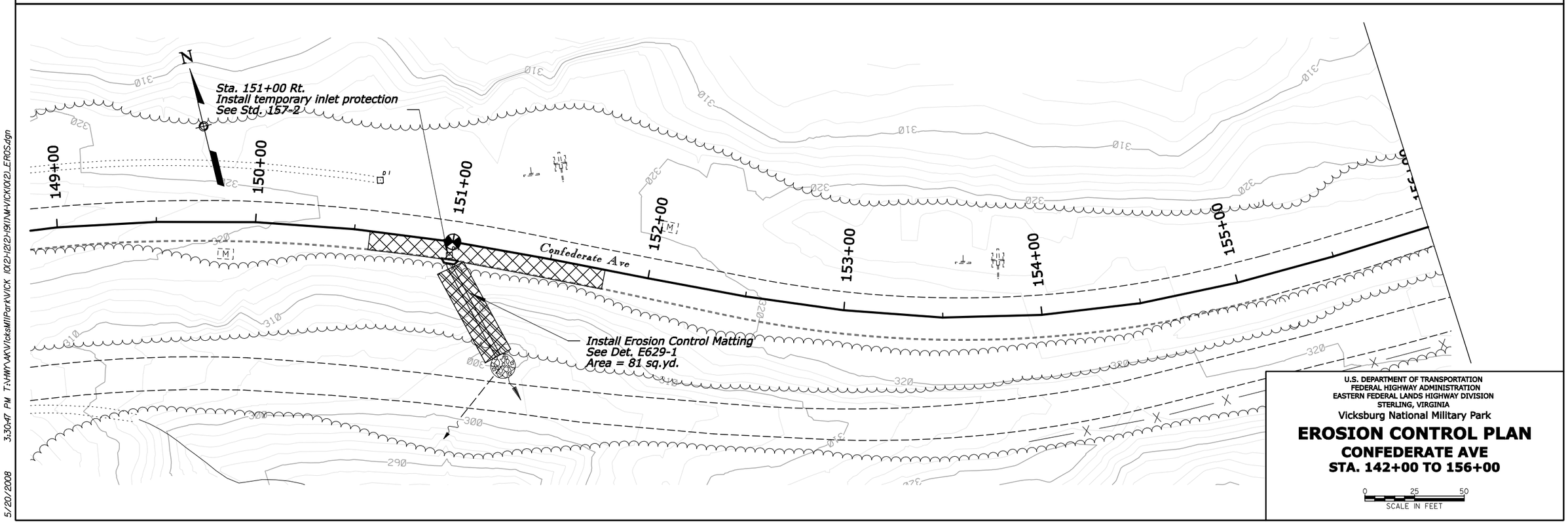

U.S. DEPARTMENT OF TRANSPORTATION
FEDERAL HIGHWAY ADMINISTRATION
EASTERN FEDERAL LANDS HIGHWAY DIVISION
STERLING, VIRGINIA

Vicksburg National Military Park

EROSION CONTROL PLAN

CONFEDERATE AVE
STA. 142+00 TO 156+00

0 25 50
SCALE IN FEET

5/20/2008 3:30:47 PM T:\HWY\AK\VicksMilPark\VICK (0(2)+12(2)+19(1)\M+VICK(0(2)_EROS.dgn

NPS NO.	REG	STATE	PROJECT	SHEET NO.
306 / 41,918	SE	MS	PRA-VICK 10(2),12(2),19(1)	M05

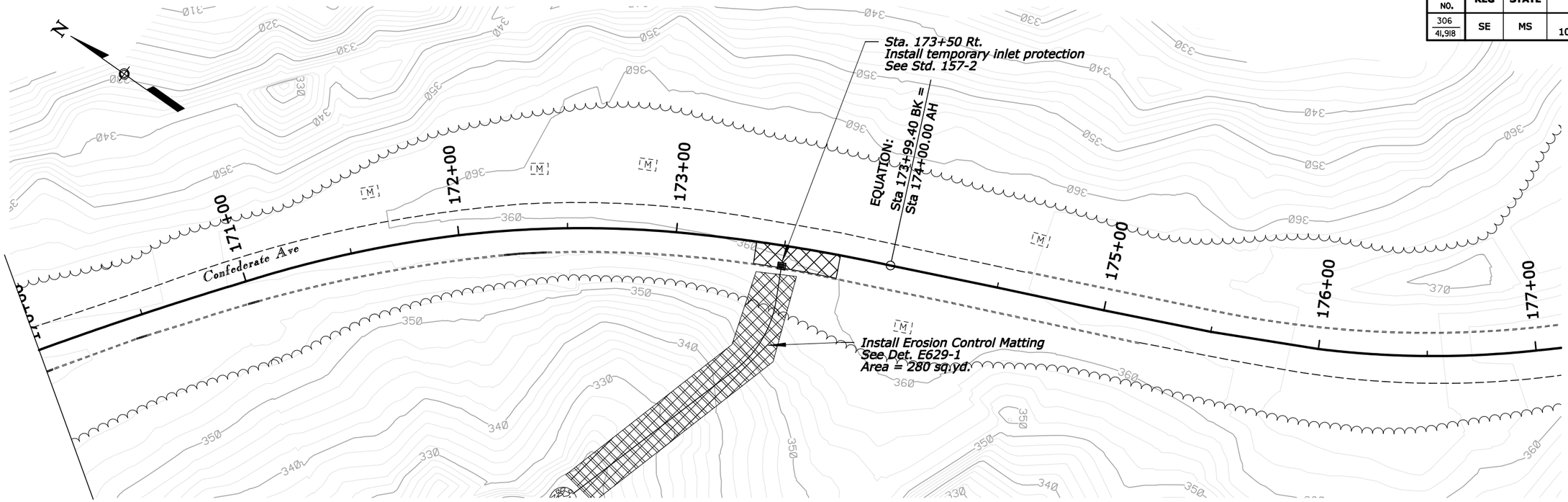

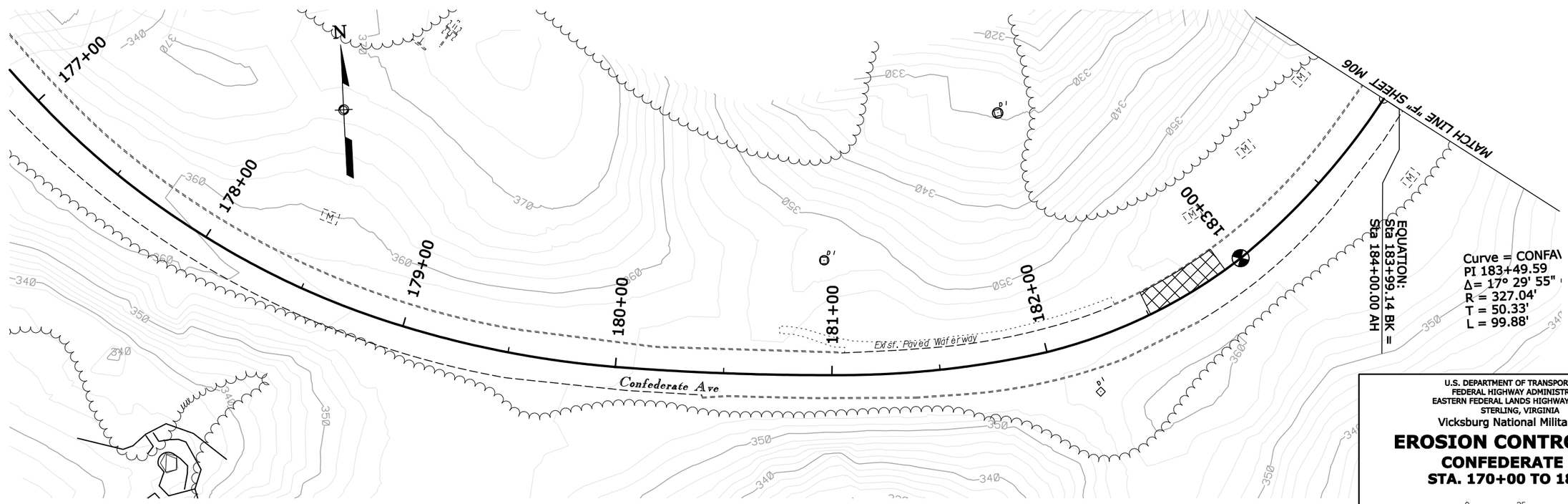

U.S. DEPARTMENT OF TRANSPORTATION
FEDERAL HIGHWAY ADMINISTRATION
EASTERN FEDERAL LANDS HIGHWAY DIVISION
STERLING, VIRGINIA

Vicksburg National Military Park

EROSION CONTROL PLAN

CONFEDERATE AVE
STA. 170+00 TO 184+00

0 25 50
SCALE IN FEET

5/20/2008 3:30:49 PM T:\HWY\AK\Vicksburg\Park\VICK 10(2)-12(2)-19(1)\M-V\VICK10(2)_EROS.dgn

NPS NO.	REG	STATE	PROJECT	SHEET NO.
306 / 41,918	SE	MS	PRA-VICK 10(2),12(2),19(1)	M06

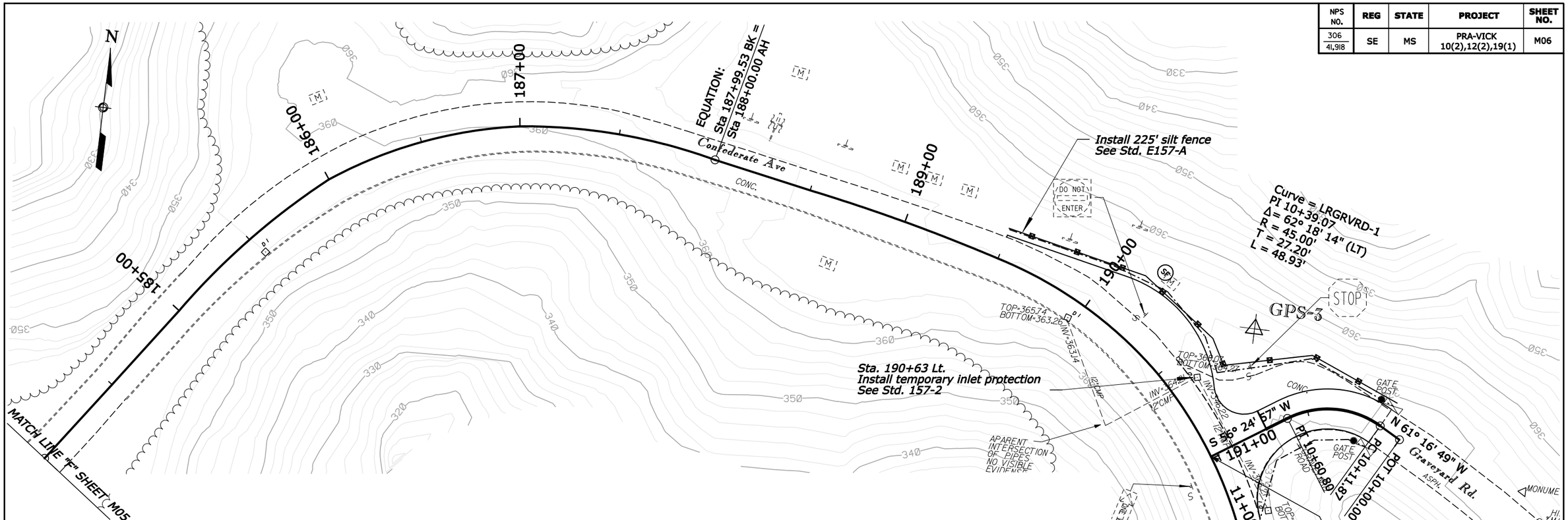

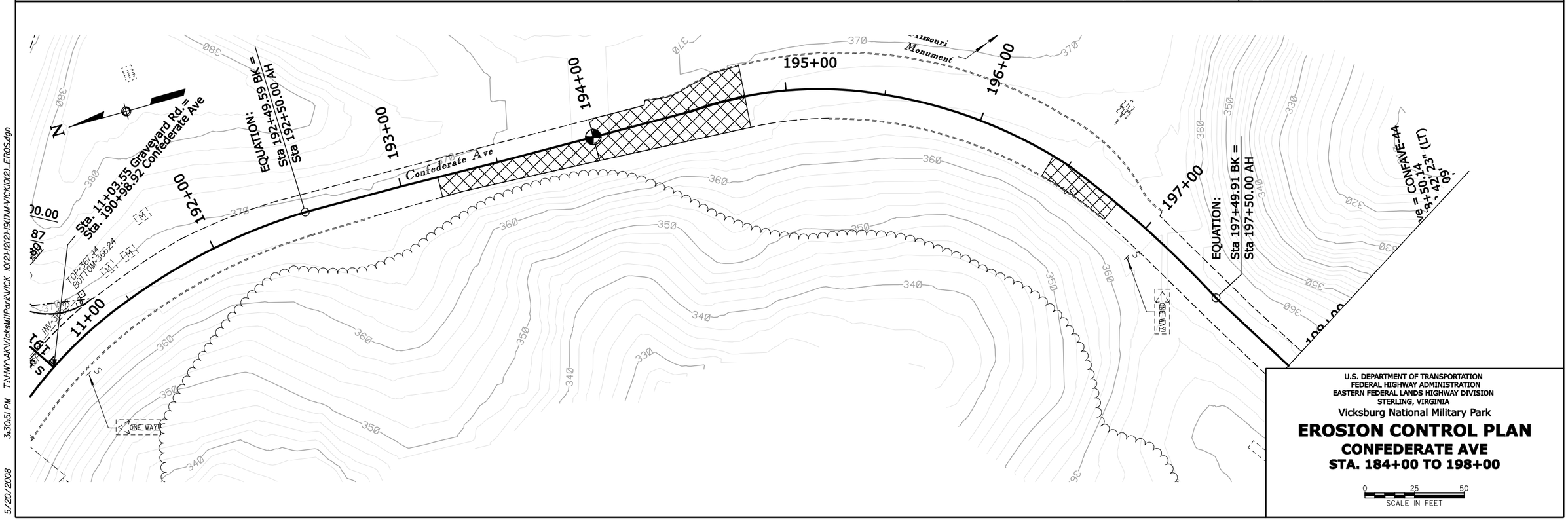

5/20/2008 3:30:51 PM T:\MWY\AK\Vicksmilpark\VICK 10(2)-12(2)-19(1)\MWVICK10(2)_EROS.dgn

NPS NO.	REG	STATE	PROJECT	SHEET NO.
306 / 41,918	SE	MS	PRA-VICK 10(2),12(2),19(1)	M07

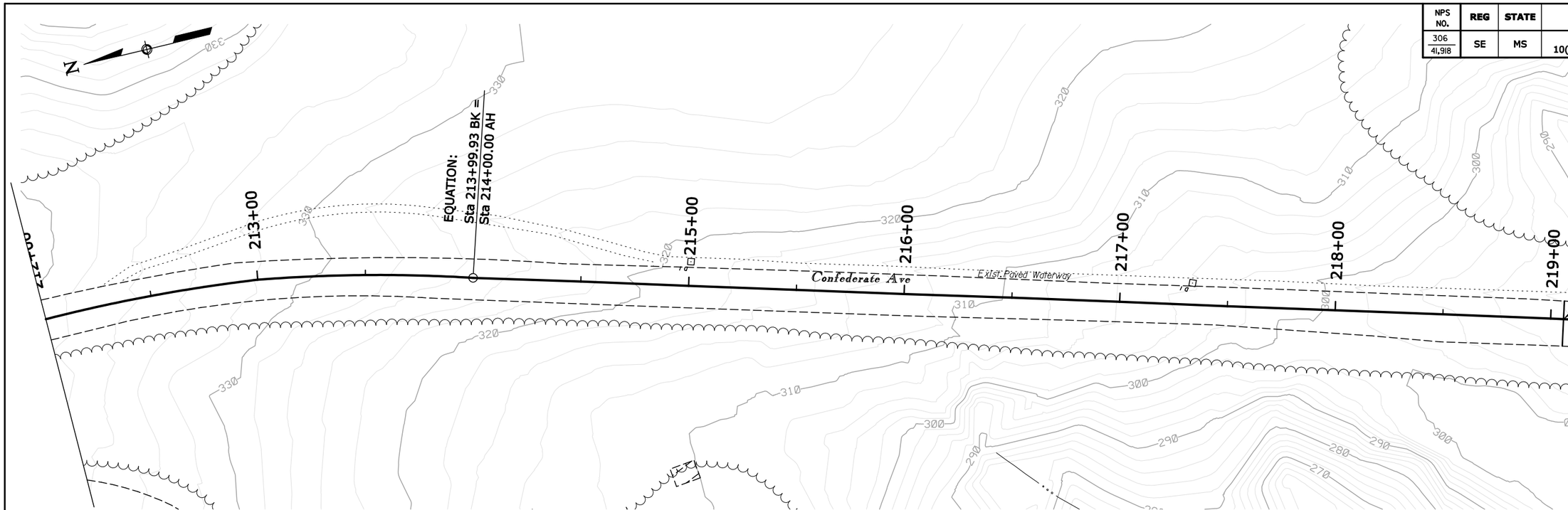

U.S. DEPARTMENT OF TRANSPORTATION
FEDERAL HIGHWAY ADMINISTRATION
EASTERN FEDERAL LANDS HIGHWAY DIVISION
STERLING, VIRGINIA

Vicksburg National Military Park

EROSION CONTROL PLAN

CONFEDERATE AVE
STA. 212+00 TO 226+00

0 25 50
SCALE IN FEET

5/20/2008 3:30:53 PM T:\HWY\AK\Vicksburg\Park\VICK 10(2)+12(2)+19(1)\M-VICK10(2)_EROS.dgn

NPS NO.	REG	STATE	PROJECT	SHEET NO.
306 / 41,918	SE	MS	PRA-VICK 10(2),12(2),19(1)	M08

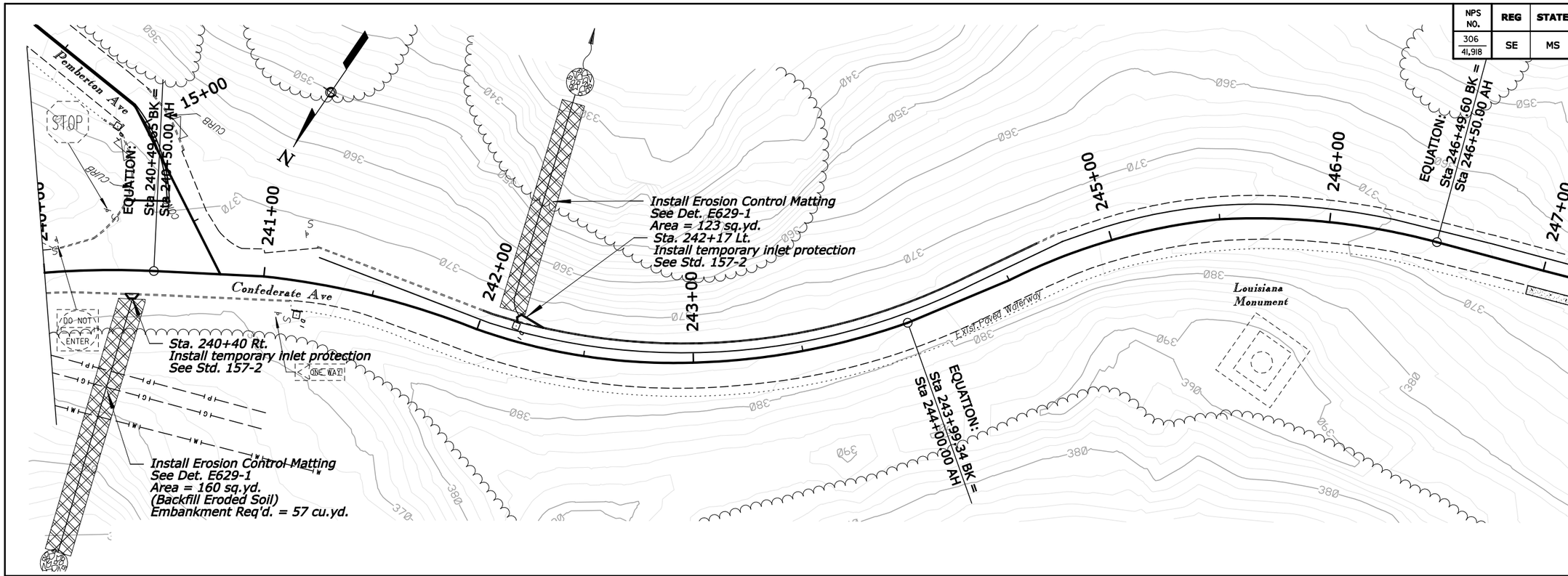

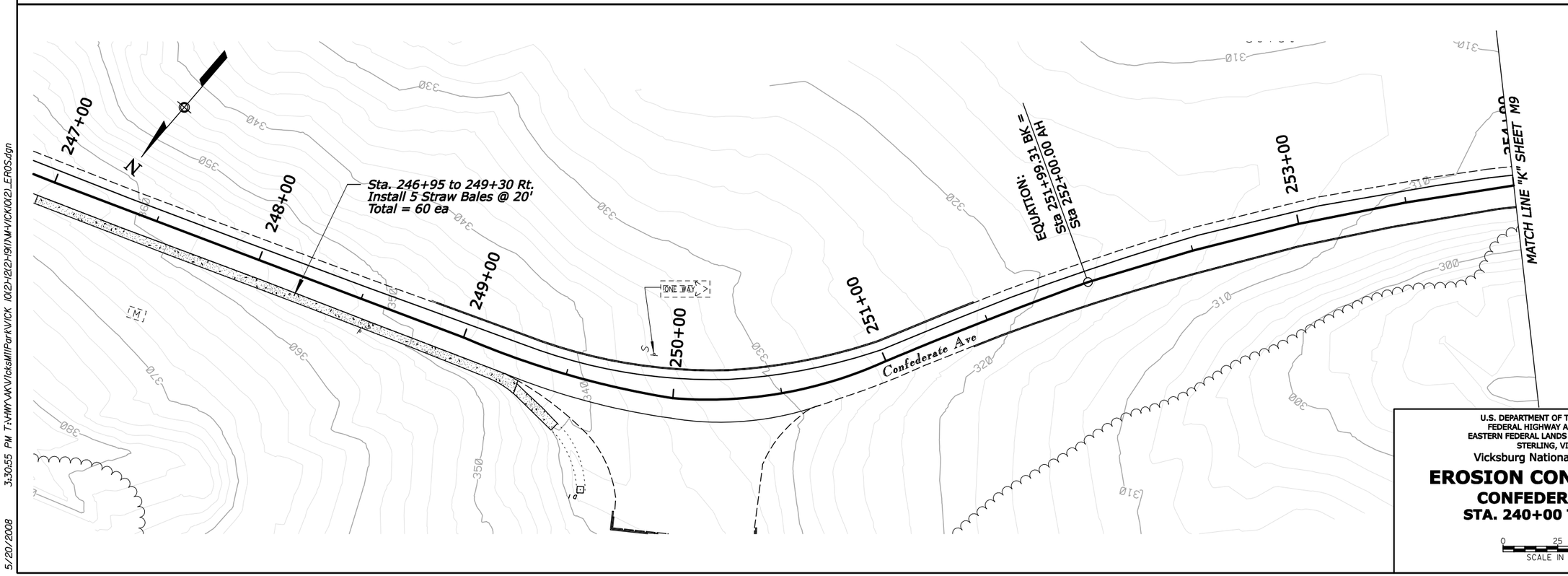

U.S. DEPARTMENT OF TRANSPORTATION
FEDERAL HIGHWAY ADMINISTRATION
EASTERN FEDERAL LANDS HIGHWAY DIVISION
STERLING, VIRGINIA

Vicksburg National Military Park

EROSION CONTROL PLAN

CONFEDERATE AVE
STA. 240+00 TO 254+00

0 25 50
SCALE IN FEET

5/20/2008 3:30:55 PM T:\HWY\AK\Vicksburg\Park\VICK (0(2)+12(2)+19(1)\M+VICK(0(2)_EROS.dgn

NPS NO.	REG	STATE	PROJECT	SHEET NO.
306 / 41,918	SE	MS	PRA-VICK 10(2),12(2),19(1)	M09

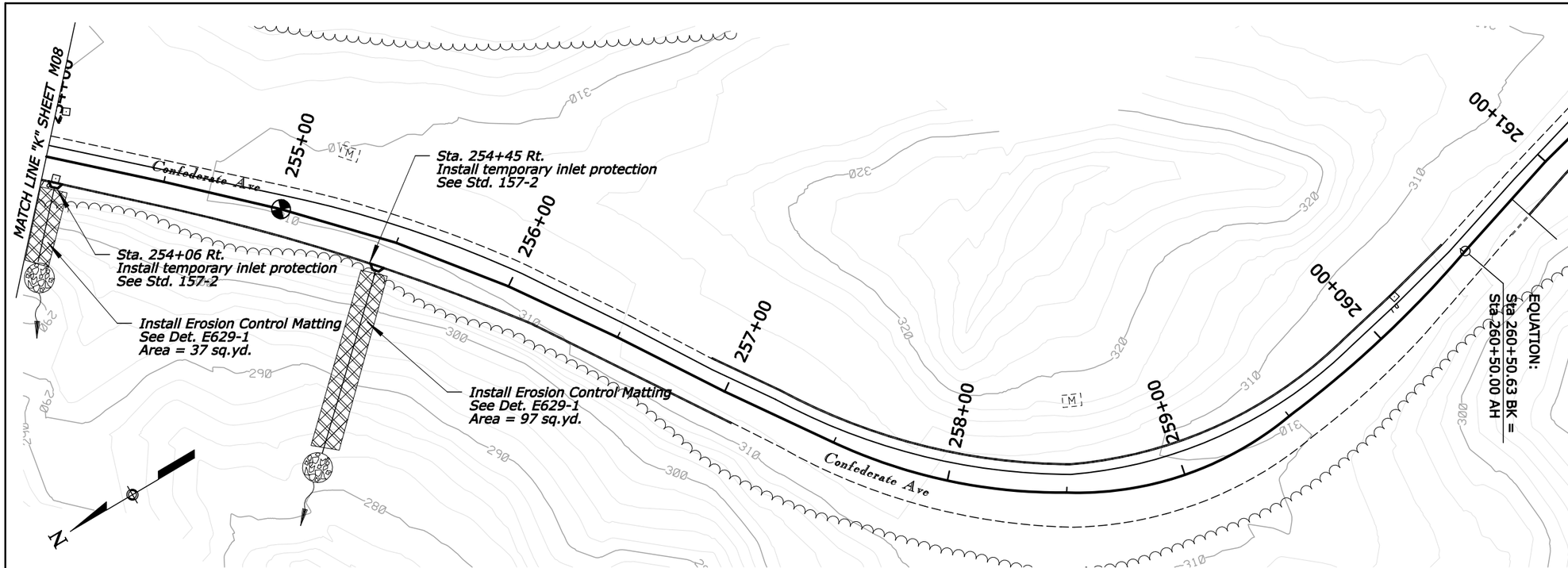

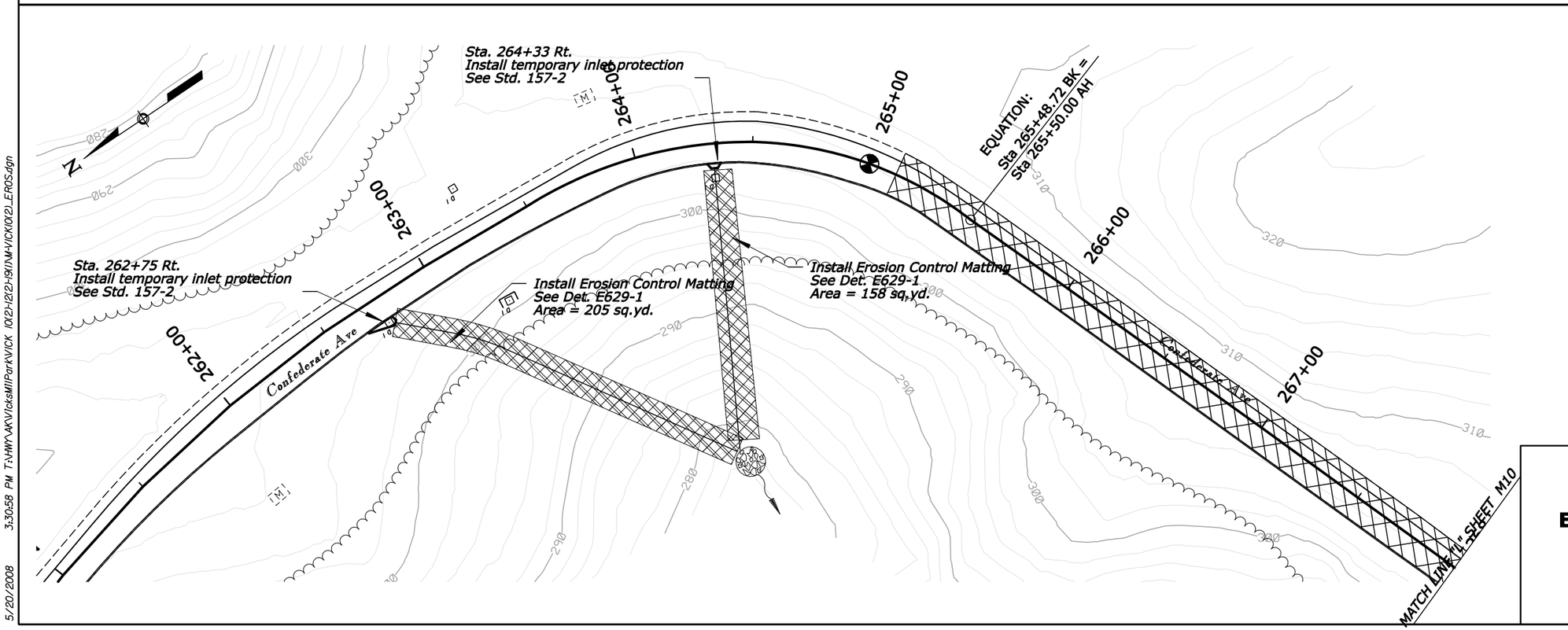

U.S. DEPARTMENT OF TRANSPORTATION
FEDERAL HIGHWAY ADMINISTRATION
EASTERN FEDERAL LANDS HIGHWAY DIVISION
STERLING, VIRGINIA

Vicksburg National Military Park

EROSION CONTROL PLAN

CONFEDERATE AVE
STA. 254+00 TO 268+00

0 25 50
SCALE IN FEET

5/20/2008 3:30:58 PM T:\HWY\AK\Vicksburg\Park\VICK (0(2)+12(2)+19(1)M+V\VICK(0(2)_EROS.dgn

NPS NO.	REG	STATE	PROJECT	SHEET NO.
306 / 41,918	SE	MS	PRA-VICK 10(2),12(2),19(1)	M10

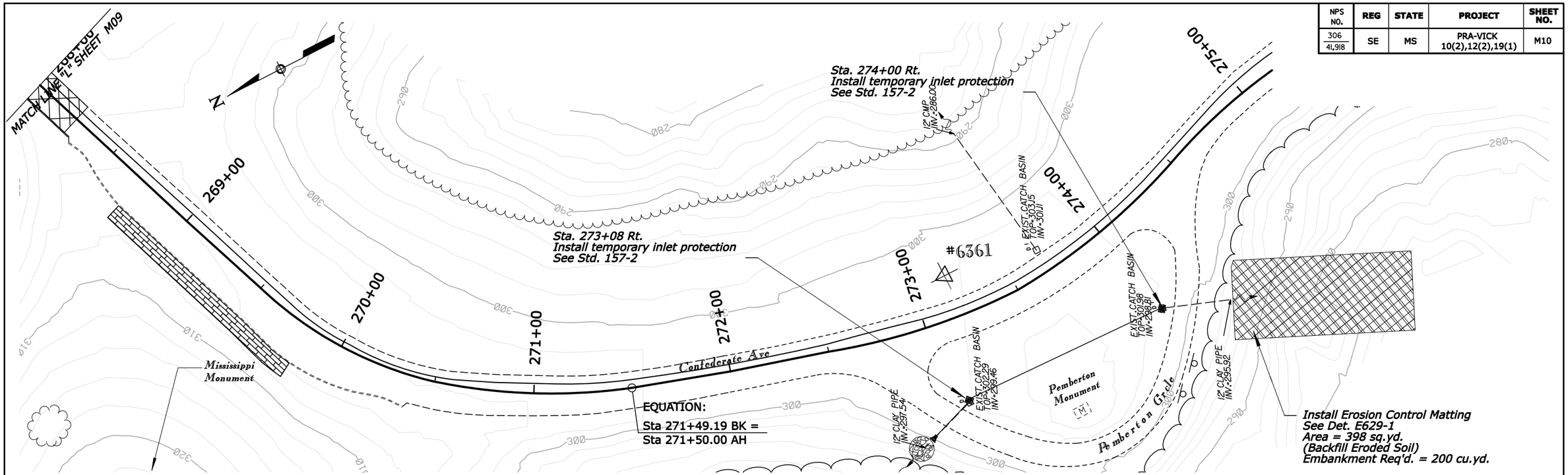

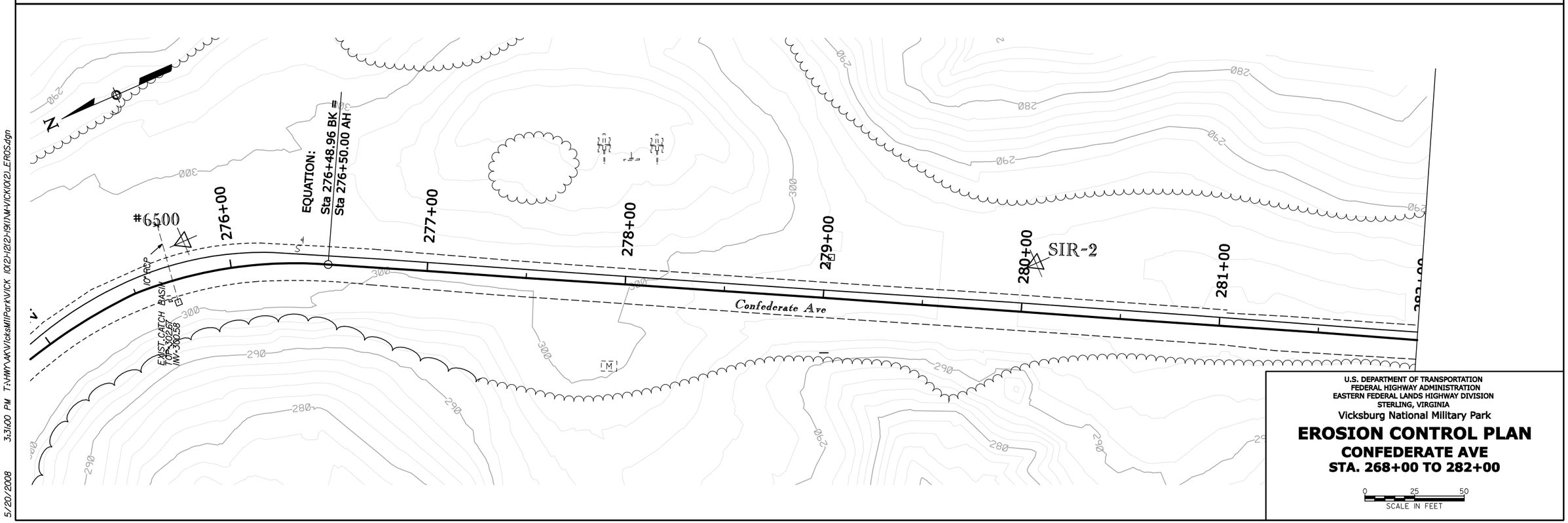

U.S. DEPARTMENT OF TRANSPORTATION
FEDERAL HIGHWAY ADMINISTRATION
EASTERN FEDERAL LANDS HIGHWAY DIVISION
STERLING, VIRGINIA

Vicksburg National Military Park

EROSION CONTROL PLAN

CONFEDERATE AVE
STA. 268+00 TO 282+00

0 25 50
SCALE IN FEET

5/20/2008 3:31:00 PM T:\HWY\AK\VicksMilPark\VICK I0(2)-12(2)-19(1)\M-VICK(0(2)_EROS.dgn

NPS NO.	REG	STATE	PROJECT	SHEET NO.
306 / 41,918	SE	MS	PRA-VICK 10(2),12(2),19(1)	M11

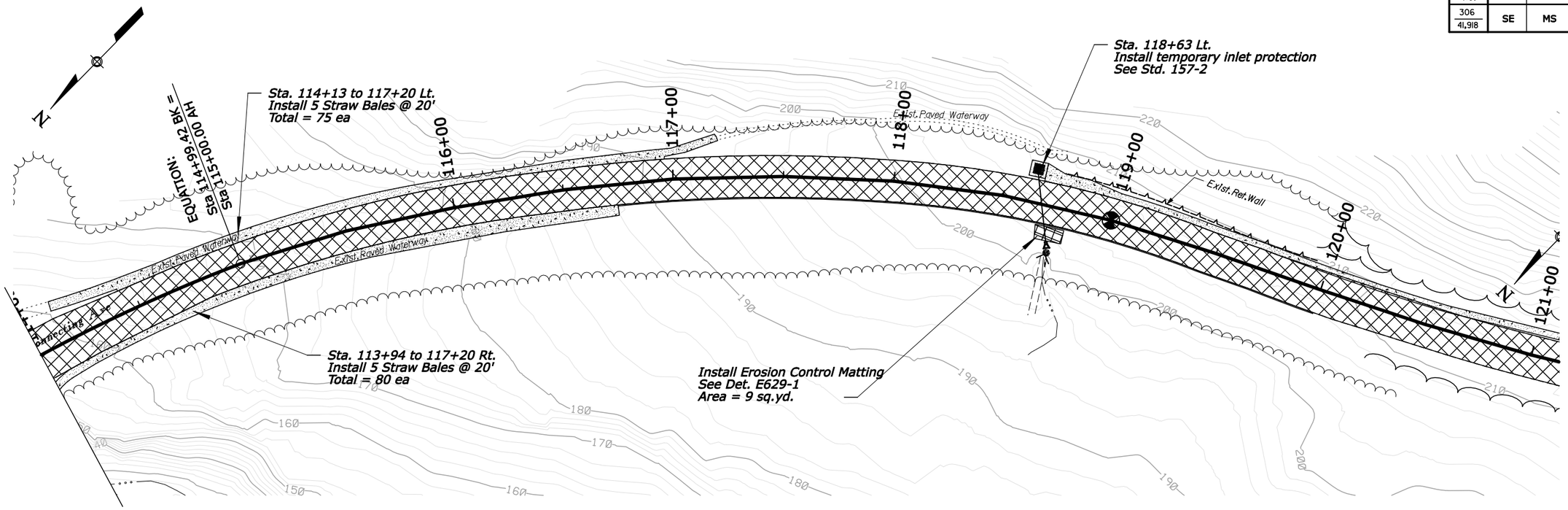

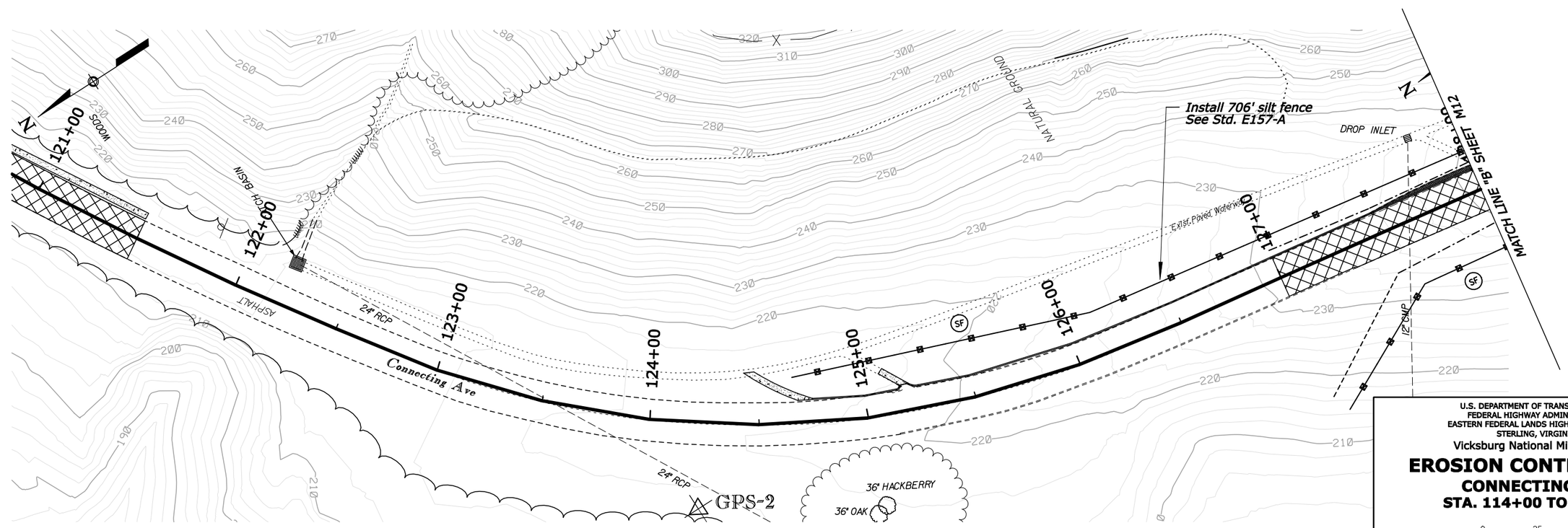

U.S. DEPARTMENT OF TRANSPORTATION
FEDERAL HIGHWAY ADMINISTRATION
EASTERN FEDERAL LANDS HIGHWAY DIVISION
STERLING, VIRGINIA

Vicksburg National Military Park

EROSION CONTROL PLAN

CONNECTING AVE
STA. 114+00 TO 128+00

0 25 50
SCALE IN FEET

5/20/2008 3:31:02 PM T:\HWY\AK\Vicksburg\Park\VICK 10(2)-12(2)-19(1)\M-V\CK10(2)_EROS.dgn

NPS NO.	REG	STATE	PROJECT	SHEET NO.
306 / 41,918	SE	MS	PRA-VICK 10(2),12(2),19(1)	M12

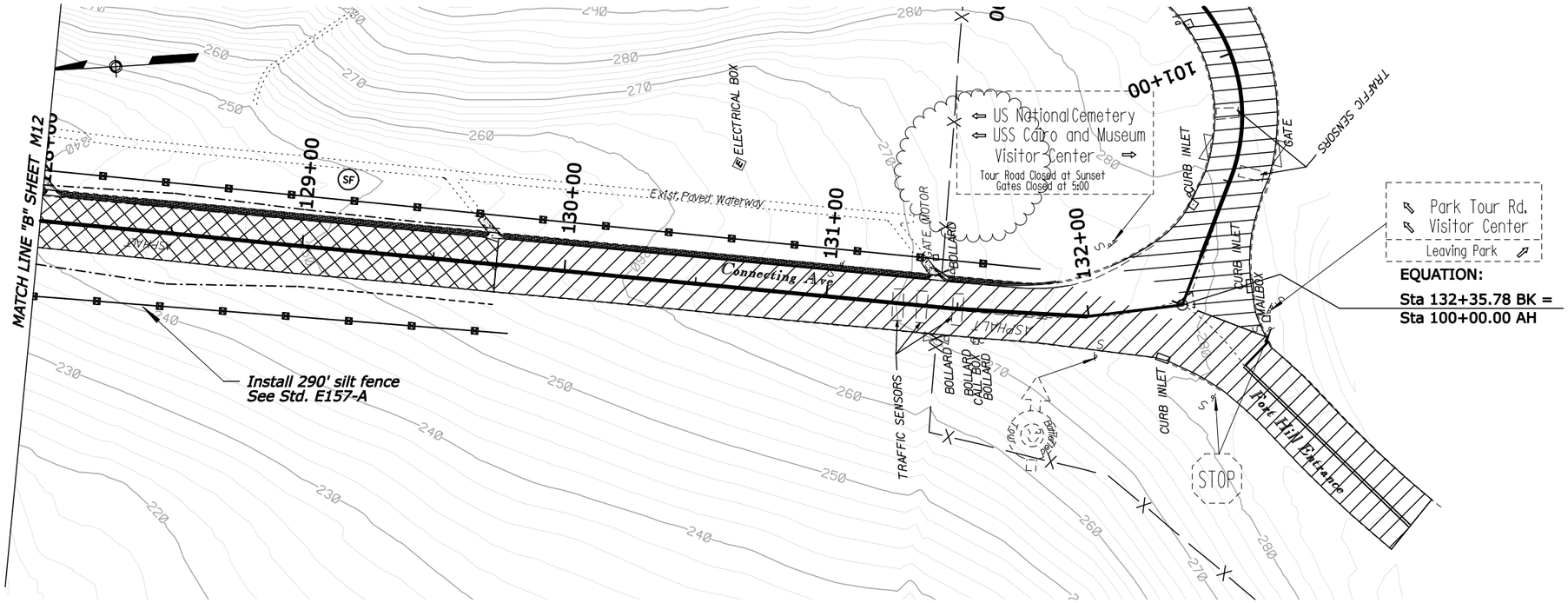

U.S. DEPARTMENT OF TRANSPORTATION
FEDERAL HIGHWAY ADMINISTRATION
EASTERN FEDERAL LANDS HIGHWAY DIVISION
STERLING, VIRGINIA

Vicksburg National Military Park

EROSION CONTROL PLAN

CONNECTING AVE

STA. 128+00 TO 132+35.78

0 25 50
SCALE IN FEET

5/20/2008 3:31:04 PM T:\HWY\AK\VicksMilParK\VICK 10(2)+12(2)+19(1)M+VICK10(2)_EROS.dgn

NPS NO.	REG	STATE	PROJECT	SHEET NO.
306 / 41,918	SE	MS	PRA-VICK 10(2),12(2),19(1)	M13

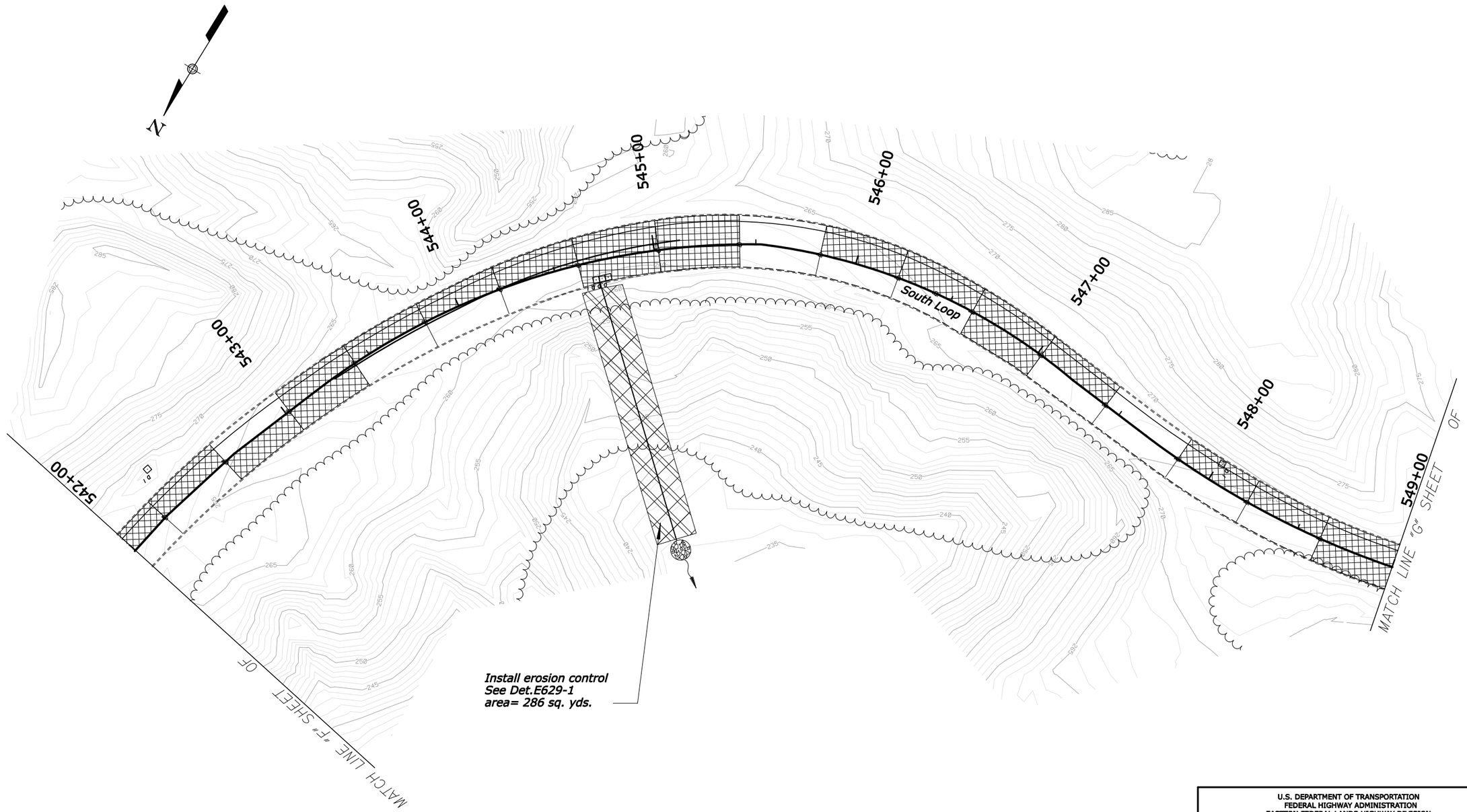

U.S. DEPARTMENT OF TRANSPORTATION
FEDERAL HIGHWAY ADMINISTRATION
EASTERN FEDERAL LANDS HIGHWAY DIVISION
STERLING, VIRGINIA

Vicksburg National Military Park

EROSION CONTROL

SOUTH LOOP

STA. 542+00 TO 549+00

0 25 50
SCALE IN FEET

5/21/2008 11:11:40 \\Server2004\projects\CIV\LTECH\JOBS\CADD\07-001\Design\022206\MVICK(9)-e8s.dgn

NPS NO.	REG	STATE	PROJECT	SHEET NO.
306 / 41,918	SE	MS	PRA-VICK 10(2),12(2),19(1)	M14

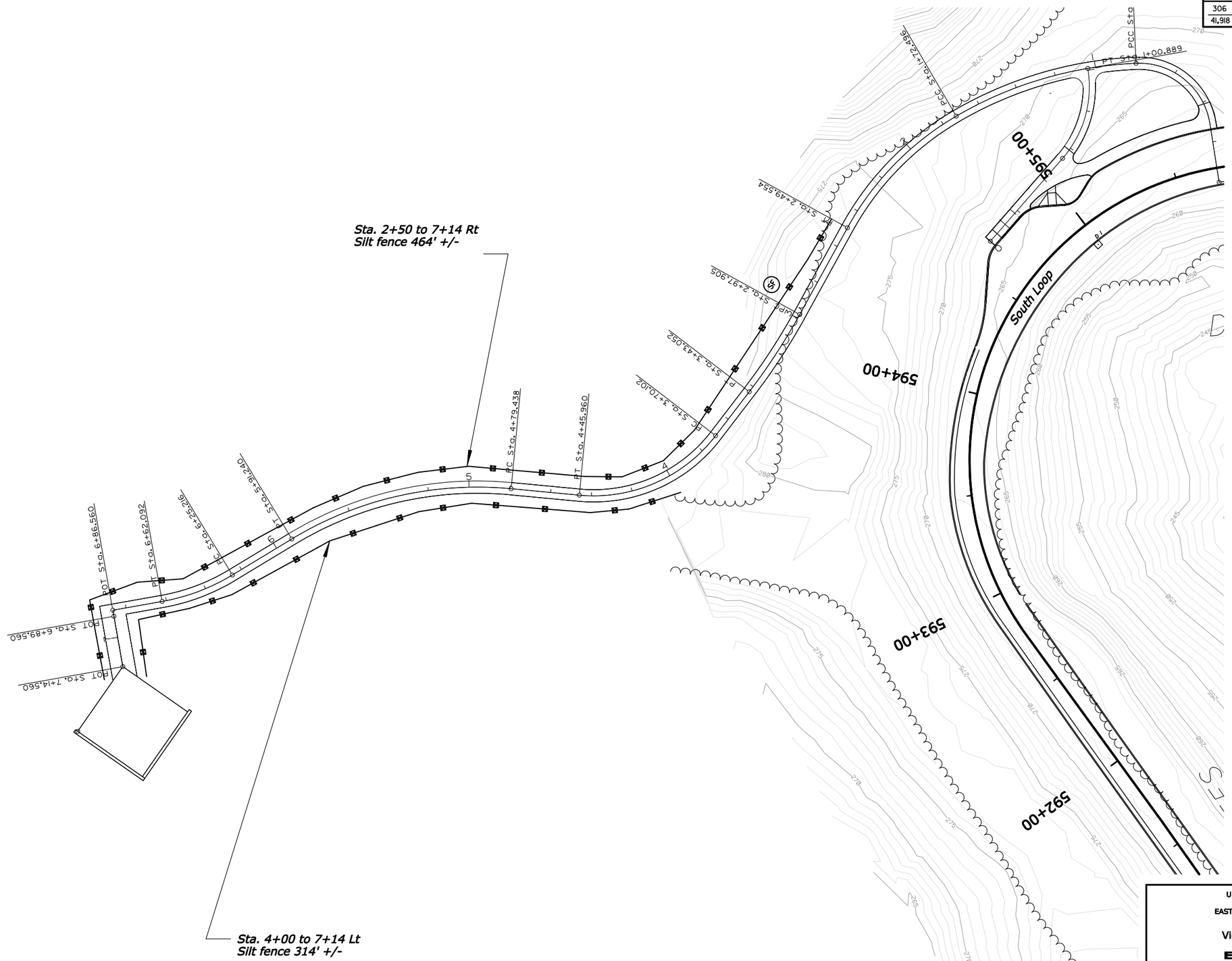

U.S. DEPARTMENT OF TRANSPORTATION
FEDERAL HIGHWAY ADMINISTRATION
EASTERN FEDERAL LANDS HIGHWAY DIVISION
STERLING, VIRGINIA

Vicksburg National Military Park

EROSION CONTROL

KENTUCKY MONUMENT

STA. 0+40 TO 6+75

0 25 50
SCALE IN FEET

6/12/2008 4:12:03 PM T:\HWY\AK\Vicksburg\Park\VICK 10(2)-12(2)-19(1)\RECEIVED FROM CV\LTECH\6-3-08\CADDFILES\022208\M-V-VICK(9)-e&s.dgn

NPS NO.	REG	STATE	PROJECT	SHEET NO.
306 / 41,918	SE	MS	PRA-VICK 10(2),12(2),19(1)	N01

TRAFFIC CONTROL GENERAL NOTES

1. *The Contractor will perform all traffic control work, in accordance with the Traffic Control Narrative, MUTCD, Sections 103, 156 and 635, with approval by the CO at least 30 days before intended use.*
2. *The CO will approve the final location and spacings of all traffic control devices.*

SOUTH LOOP ROAD (RTE 19) (SCHEDULE A)

1. *Restrict all vehicle, bicycle, and pedestrian traffic on South Loop Road during construction operations.*
2. *Construction signs and locations see sheet no. N02*
3. *Project haul route see sheet no. N02.*

CONFEDERATE AVENUE & PEMBERTON AVE (RTE 12) (SCHEDULE B)

1. *At least one lane must remain open at all times during construction operations on Confederate Ave. Traffic control see Detail E635-5A.*
2. *Contractor allowed to close Pemberton Avenue to traffic during construction operations.*
3. *Restrict all vehicle, bicycle, and pedestrian traffic within each pull-off or parking area during its construction operations. Install traffic/pedestrian control devices as approved by the CO.*
4. *Project haul route see sheet no. N03.*

CONNECTING AVENUE (RTE 10) (SCHEDULE C)

1. *No construction allowed on Connecting Ave Prior to completion of all items of work on Confederate Ave.*
2. *Closing of Connecting Ave will be allowed during reconstruction of pavement in accordance with the traffic control plan as shown on sheet no. N03.*
3. *Construction signs and locations see sheet no. N03 and Detail E635-6A*
4. *Project haul route see sheet no. N03.*

U.S. DEPARTMENT OF TRANSPORTATION
FEDERAL HIGHWAY ADMINISTRATION
EASTERN FEDERAL LANDS HIGHWAY DIVISION
STERLING, VIRGINIA
Vicksburg National Military Park

TRAFFIC CONTROL NARRATIVE

6/13/2008 8:59:39 AM T:\MWP\AK\Vicksburg\Park\VICK 10(2)-12(2)-19(1)\N-VICK(10(2)_tcp.dgn

NPS NO.	REG	STATE	PROJECT	SHEET NO.
306 / 41,918	SE	MS	PRA-VICK 10(2),12(2),19(1)	N02

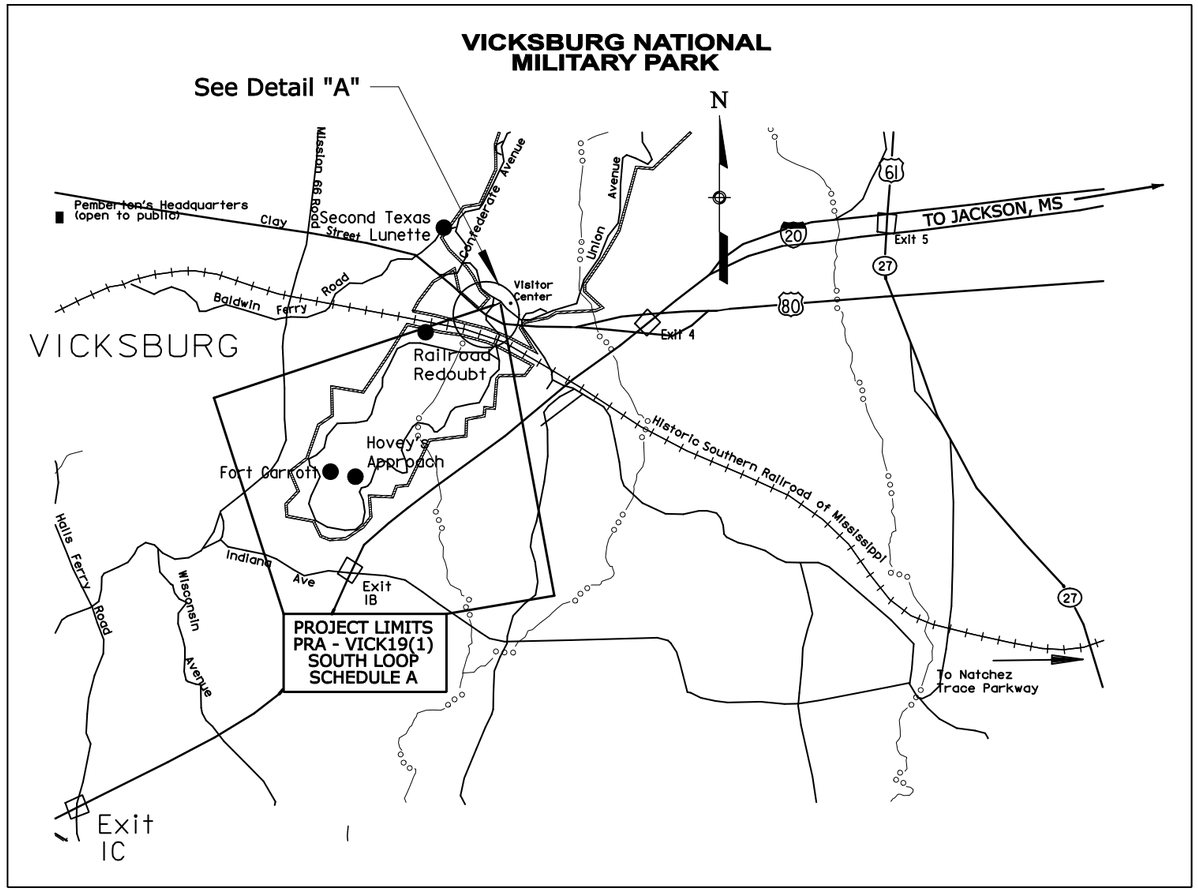

LEGEND:

Vicksburg National Military Park limits

NOTES:

1. Remove Haul Rd. and 30' metal gate upon completion of South Loop and Kentucky Monument parking area and sidewalk construction.
2. Provide turf establishment on all disturbed areas upon removal of Haul Rd.

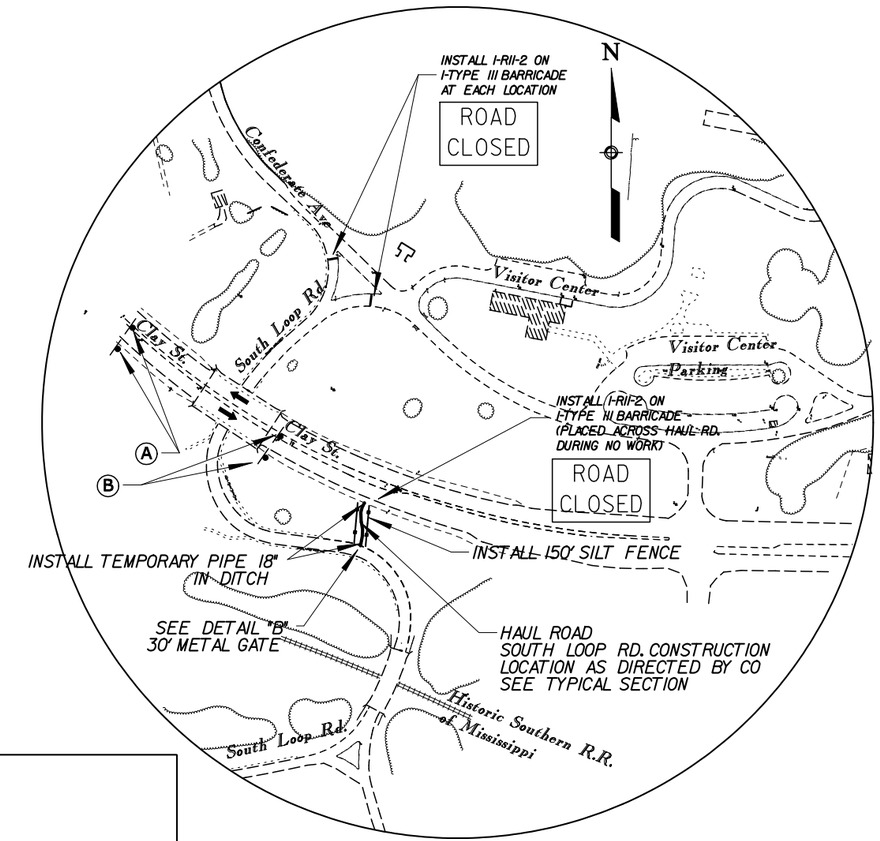

DETAIL "A"

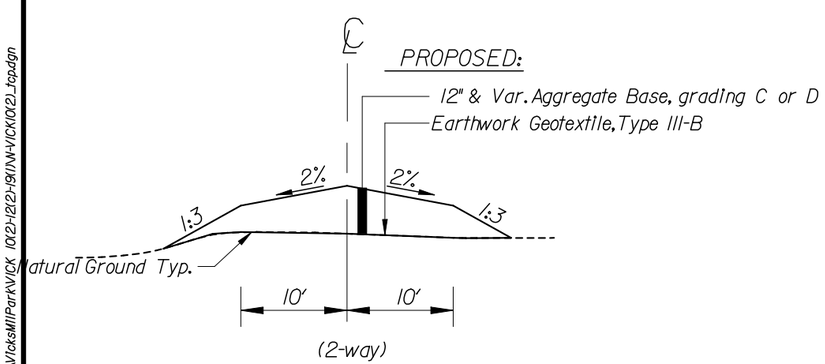

TYPICAL SECTION

HAUL ROAD

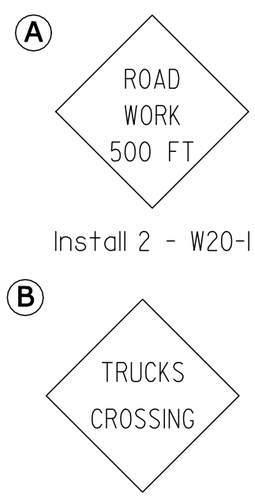

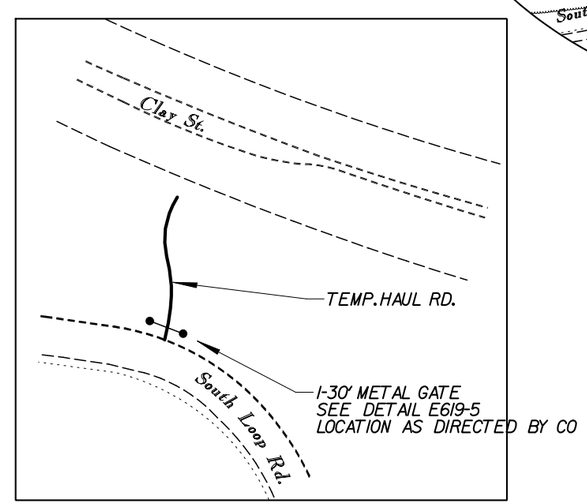

DETAIL "B"

U.S. DEPARTMENT OF TRANSPORTATION
FEDERAL HIGHWAY ADMINISTRATION
EASTERN FEDERAL LANDS HIGHWAY DIVISION
STERLING, VIRGINIA

VICKSBURG NATIONAL MILITARY PARK

TRAFFIC CONTROL PLAN & HAUL ROUTE

SCHEDULE A - SOUTH LOOP RD.
SCHEDULE D - KENTUCKY MONUMENT AREA

N.T.S.

5/20/2008 3:27:33 PM T:\HWY\AK\VicksMilPark\VICK 10(2)-12(2)-19(1)\N-V\VICK10(2)_topdgn

NPS NO.	REG	STATE	PROJECT	SHEET NO.
306 / 41,918	SE	MS	PRA-VICK 10(2),12(2),19(1)	N03

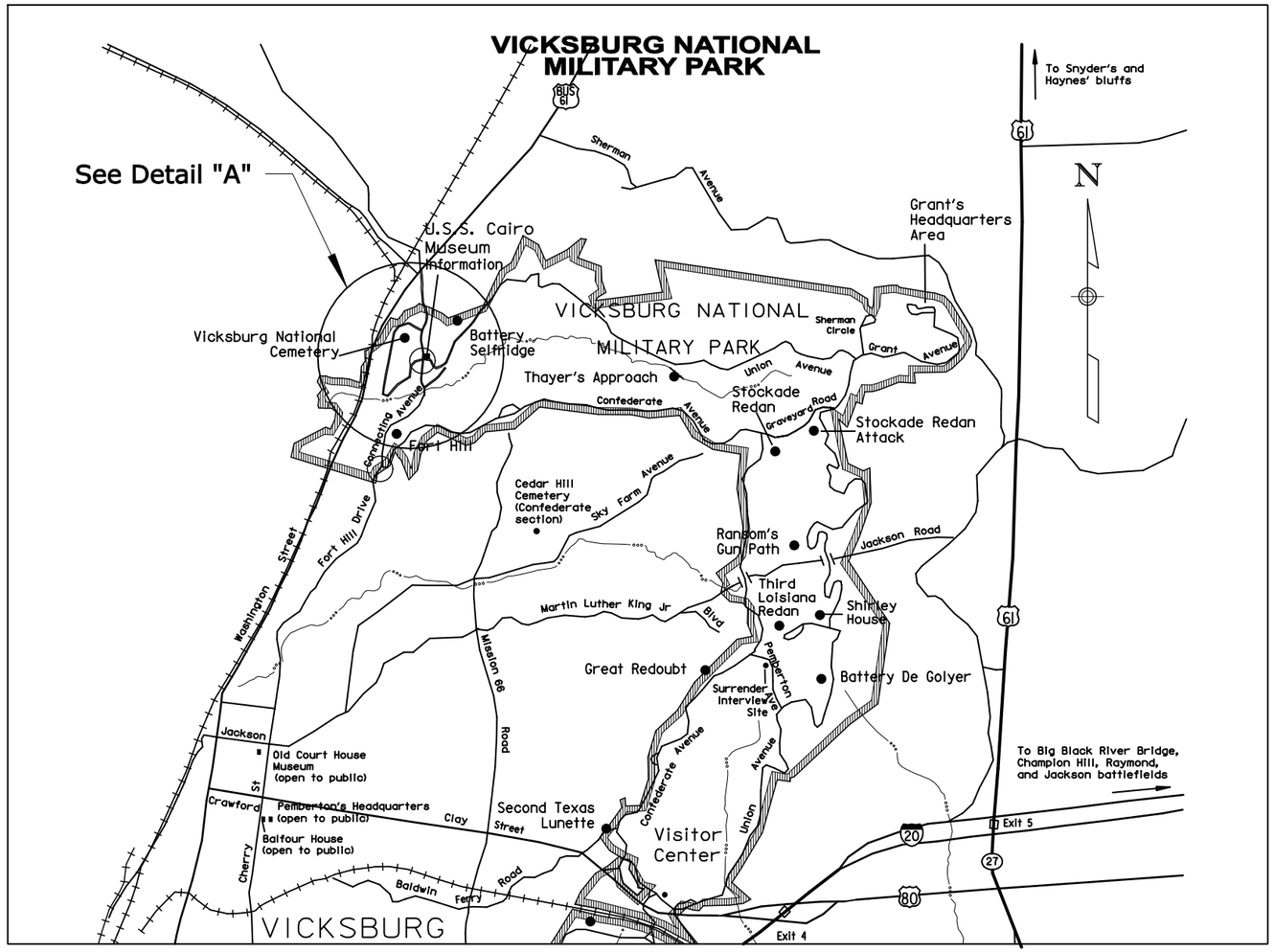

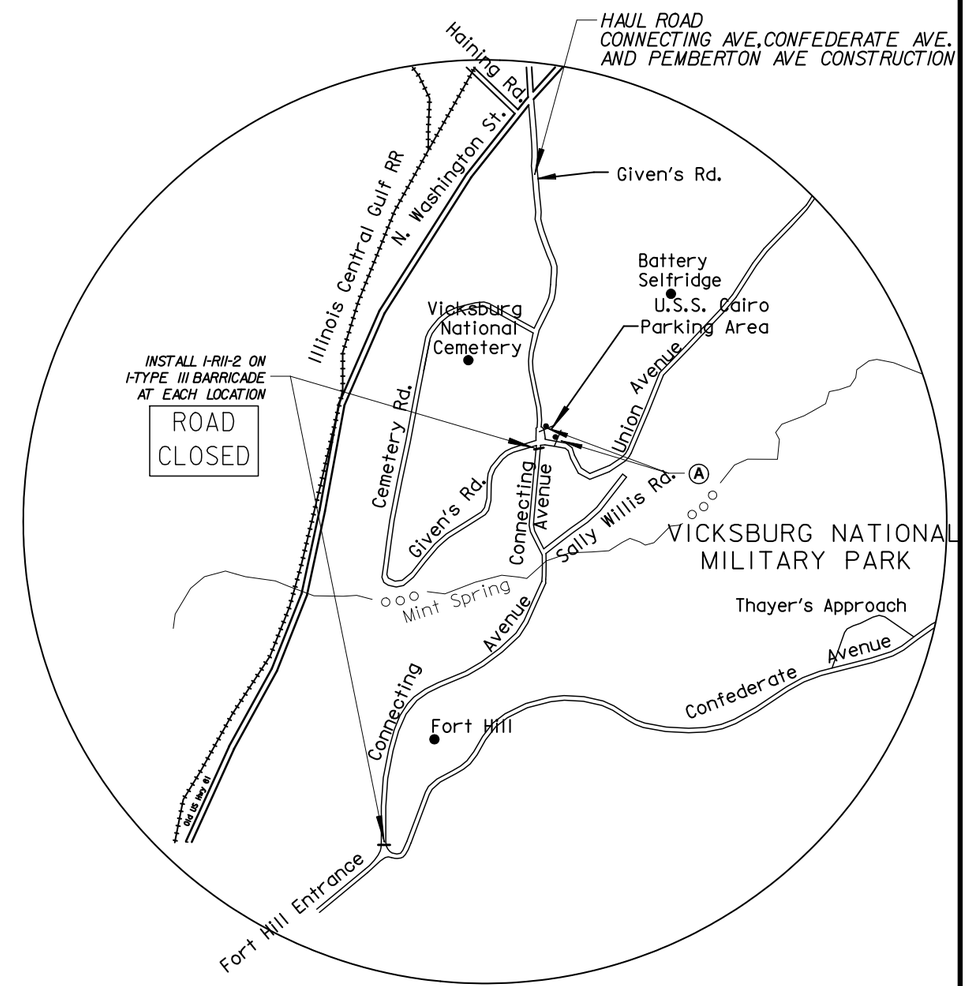

DETAIL "A"

(A)

TRUCKS CROSSING

Install 2 - W8-6
Location in parking area as directed by CO.

U.S. DEPARTMENT OF TRANSPORTATION
FEDERAL HIGHWAY ADMINISTRATION
EASTERN FEDERAL LANDS HIGHWAY DIVISION
STERLING, VIRGINIA

VICKSBURG NATIONAL MILITARY PARK

TRAFFIC CONTROL PLAN & HAUL ROUTE

SCHEDULE B - CONFEDERATE AVE & PEMBERTON AVE
SCHEDULE C - CONNECTING AVE

N.T.S.

5/20/2008 3:27:47 PM T:\HWY\AK\VicksMilPark\VICK 10(2)-12(2)-19(1)\N-VICK10(2)_top.dgn

NPS NO.	REG	STATE	PROJECT	SHEET NO.
306 / 41,918	SE	MS	PRA - VICK 10(2),12(2),19(1)	S01

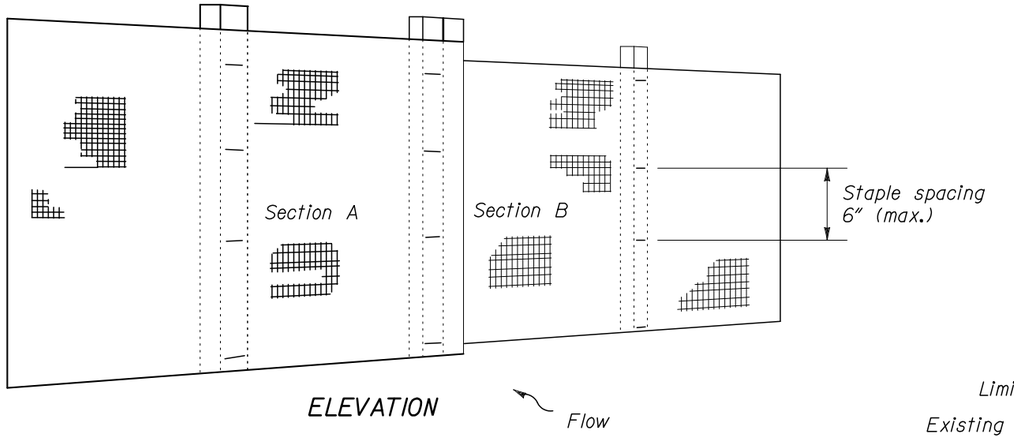

ELEVATION

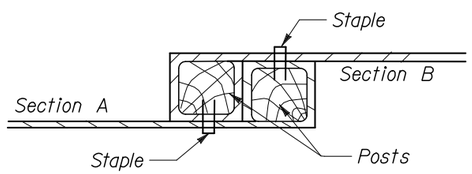

PLAN

JOINING TWO ADJACENT SILT FENCE SECTIONS

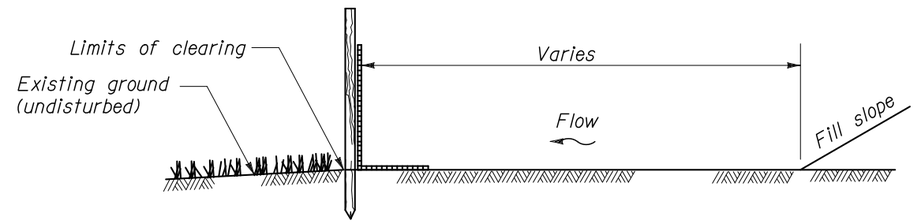

ELEVATION

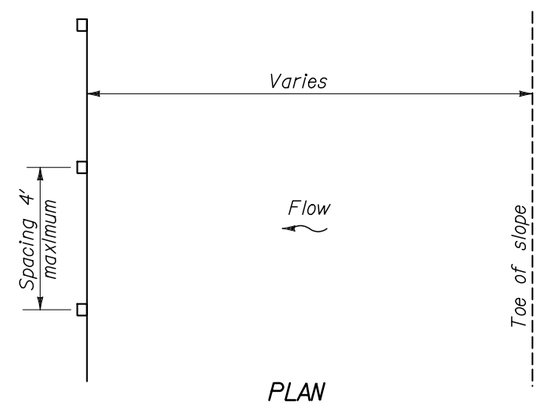

PLAN

SILT FENCE INSTALLATION AT TOE OF FILL

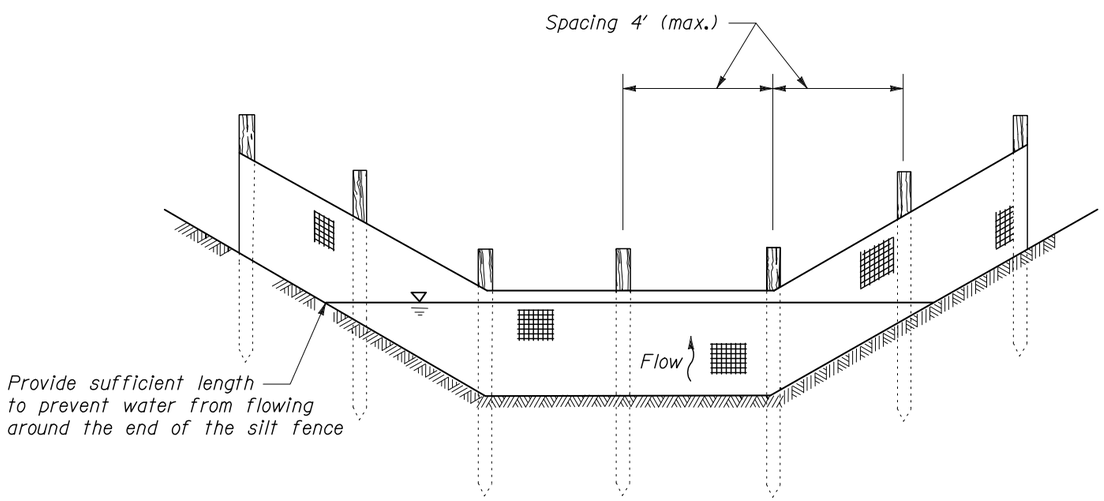

SILT FENCE INSTALLATION IN A DRAINAGE DITCH

(See note 1)

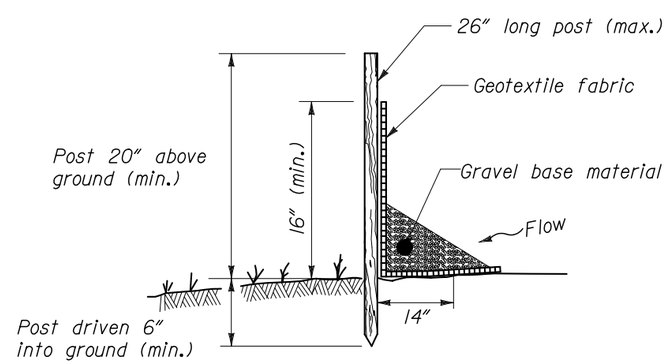

(not to scale)

U.S. DEPARTMENT OF TRANSPORTATION
FEDERAL HIGHWAY ADMINISTRATION
EASTERN FEDERAL LANDS HIGHWAY DIVISION

DETAIL

SILT FENCE
(NON-OBTRUSIVE)

STANDARD APPROVED FOR USE --/----

REVISED:

DETAIL
E157-A

5/20/2008 3:08:50 PM T:\HWY\AK\VicksMillPark\VICK 10(2)-12(2)-19(1)\S-VICK10(2)_std.dgn

NPS NO.	REG	STATE	PROJECT	SHEET NO.
306 / 41,918	SE	MS	PRA - VICK 10(2),12(2),19(1)	S02

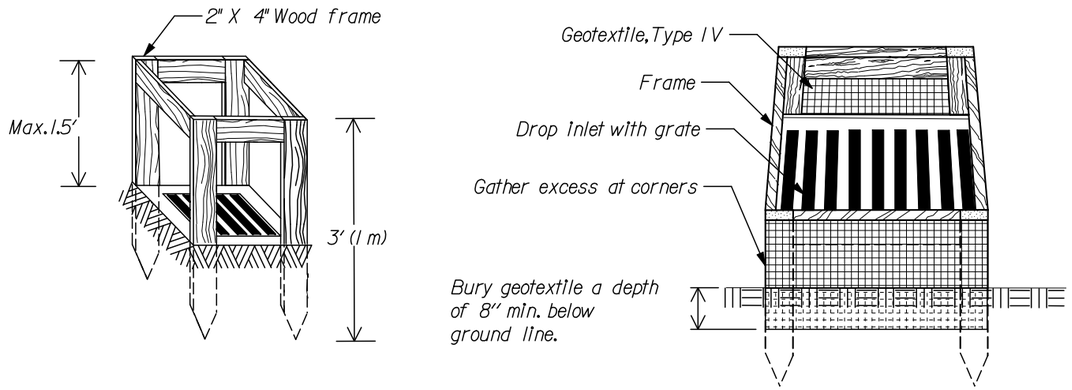

SILT FENCE DROP INLET PROTECTION (TYPE A)

Note: Use Type A inlet protection in sump locations only.

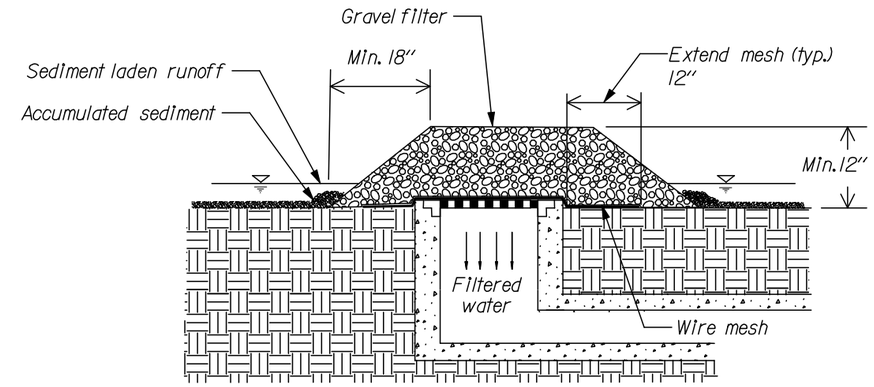

GRAVEL AND WIRE MESH DROP INLET PROTECTION (TYPE B)

Note: Use Type B inlet protection only in sump locations where heavy concentrated flows are not expected. Do not use where ponding around the structure might cause inconvenience or damage.

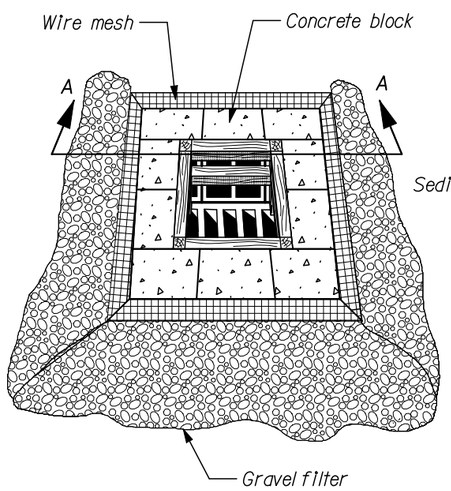

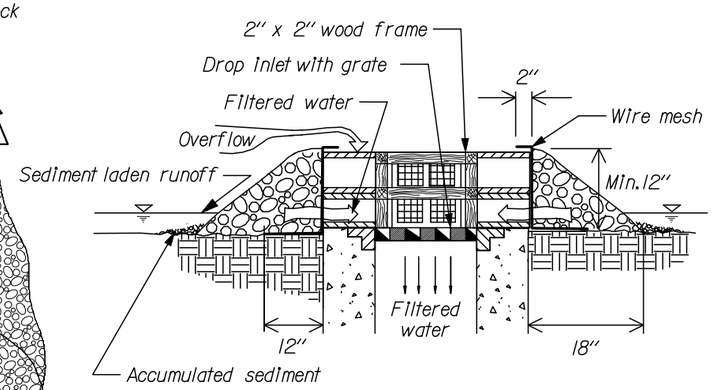

SECTION A-A

BLOCK AND GRAVEL DROP INLET PROTECTION (TYPE C)

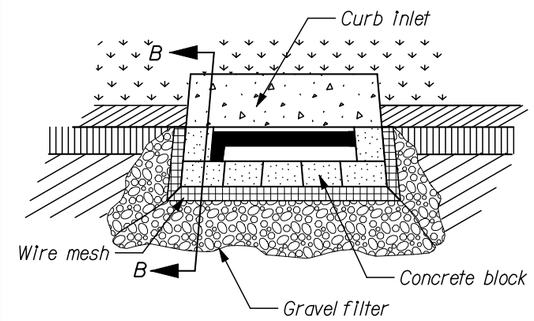

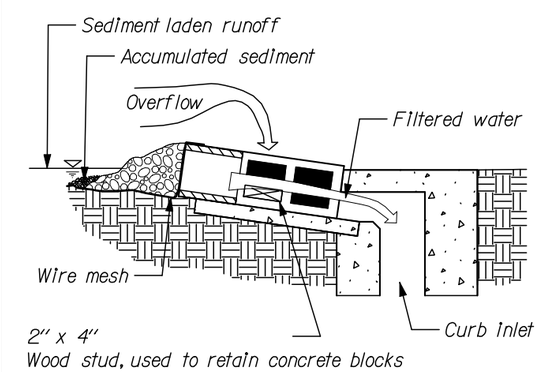

SECTION B-B

CURB INLET PROTECTION, BLOCK AND GRAVEL (TYPE D)

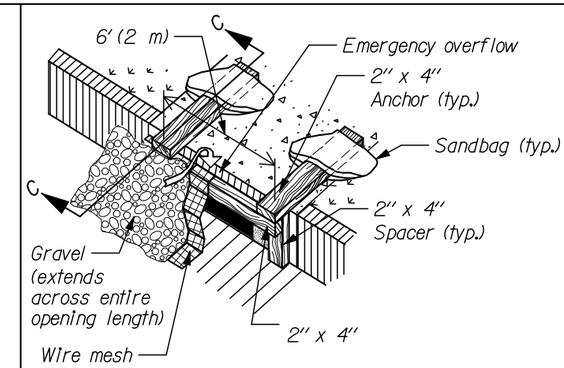

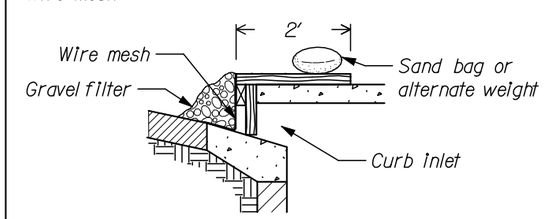

SECTION C-C

CURB INLET PROTECTION, WOODEN WEIR (TYPE E)

General Notes:

1. For gravel filters use 2" - 3" diameter coarse aggregate.
2. Use wire mesh with 1/2" x 1/2" openings.

(not to scale)

U.S. DEPARTMENT OF TRANSPORTATION
FEDERAL HIGHWAY ADMINISTRATION
FEDERAL LANDS HIGHWAY

STANDARD

TEMPORARY INLET PROTECTION

STANDARD APPROVED FOR USE --/----

REVISED:

STANDARD 157-2

5/20/2008 3:09:12 PM T:\NWP\AKV\Vicksburg\ParkVICK 10(2)-12(2)-19(1)\S-VICK10(2)_std.dgn

NPS NO.	REG	STATE	PROJECT	SHEET NO.
306 / 41,918	SE	MS	PRA - VICK 10(2),12(2),19(1)	S03

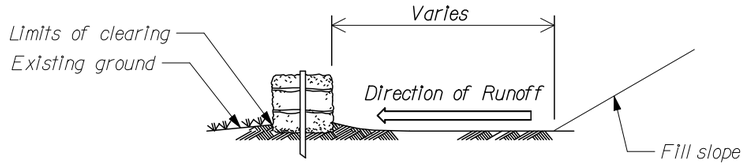

ELEVATION

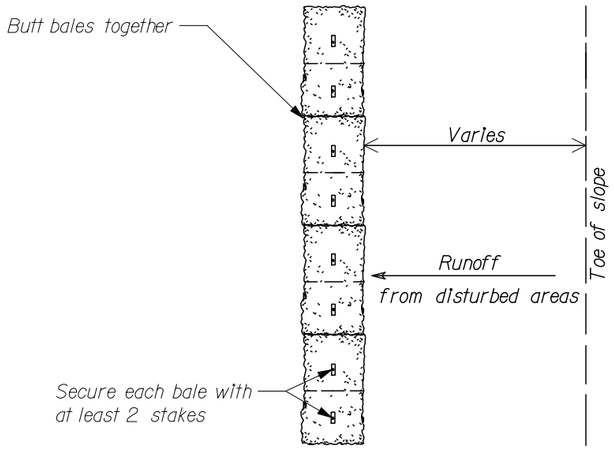

PLAN

INSTALLATION OF A STRAW BALE BARRIER AT TOE OF FILL

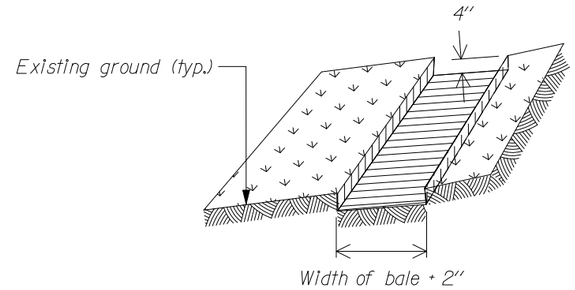

Step 1: Excavate trench

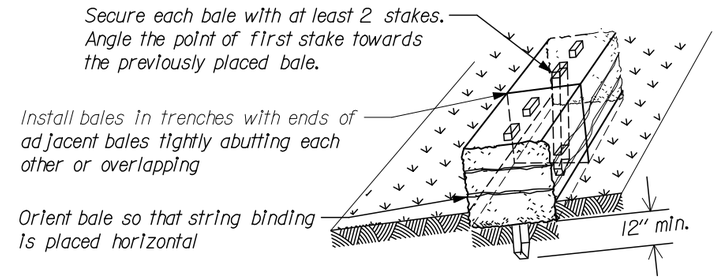

Step 2: Install bales

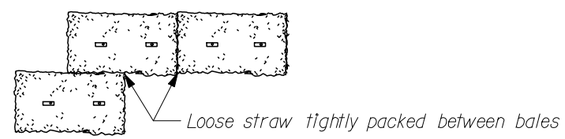

Step 3: Tightly pack straw between bales
(plan view of bales)

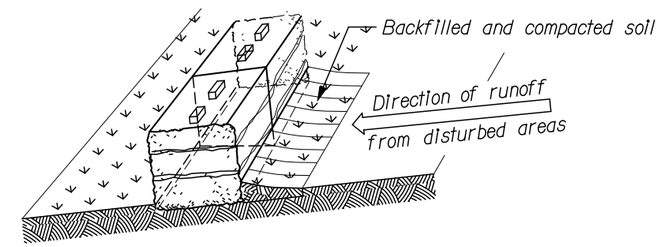

Step 4: Backfill soil against bales

PROPERLY STAKED AND ENTRENCHED STRAW BALES

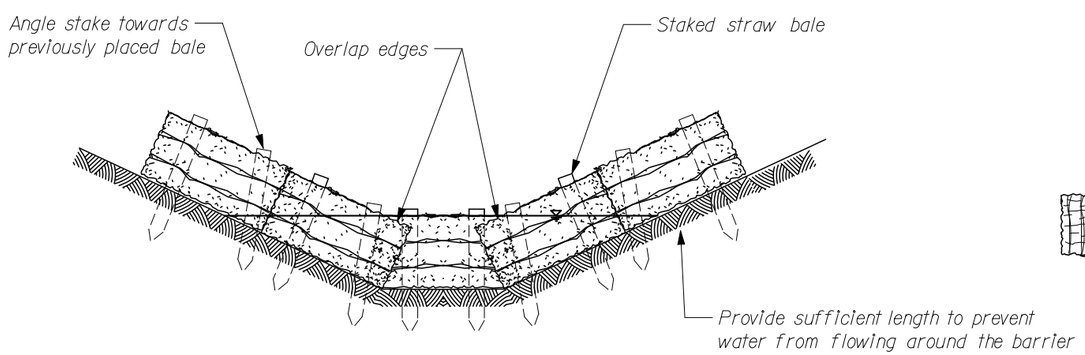

ELEVATION

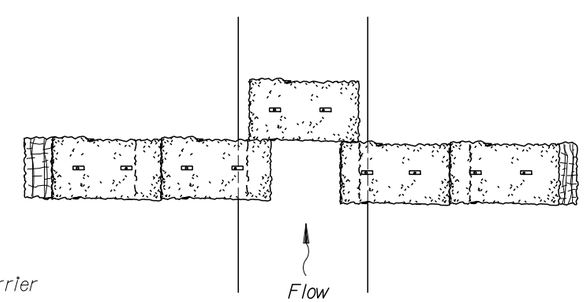

PLAN

INSTALLATION OF A STRAW BALE BARRIER IN DITCH

(not to scale)

Note:

Use straw bales in drainage ditches only for low flow conditions and when specified on the Erosion Control Plans.

U.S. DEPARTMENT OF TRANSPORTATION
FEDERAL HIGHWAY ADMINISTRATION
FEDERAL LANDS HIGHWAY

STANDARD

STRAW BALES

STANDARD APPROVED FOR USE --/----

REVISED:

STANDARD 157-3

5/20/2008 3c0925 PW T:\HWY\AK\VicksMillPark\VICK 10(2)-12(2)-19(1)\S-VICK10(2)_std.dgn

NPS NO.	REG	STATE	PROJECT	SHEET NO.
306 / 41,918	SE	MS	PRA - VICK 10(2),12(2),19(1)	S04

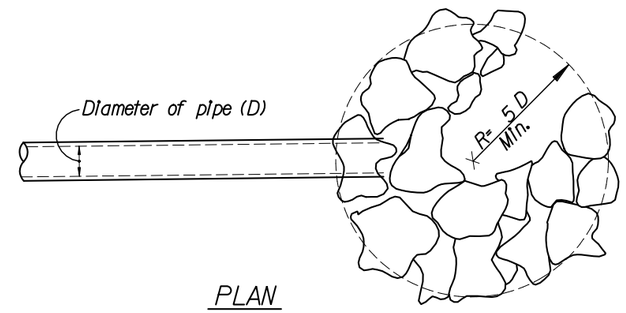

PLAN

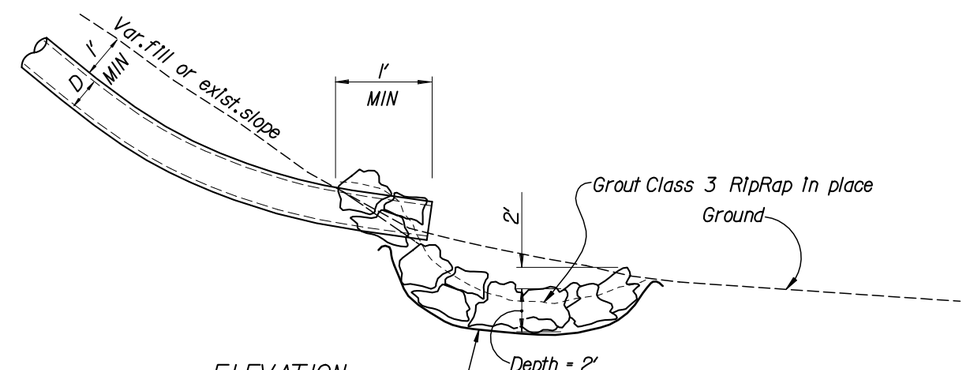

ELEVATION

CULVERT WITH NO END TREATMENT

NOT TO SCALE

U.S. DEPARTMENT OF TRANSPORTATION
FEDERAL HIGHWAY ADMINISTRATION
EASTERN FEDERAL LANDS HIGHWAY DIVISION

DETAIL

GROUTED RIPRAP AT CULVERT

DETAIL APPROVED FOR USE --/----

REVISED:

DETAIL E251-A

5/20/2008 3:13:31 PM T:\HWY\AK\Vicksburg\ParkV\ICK 10(2)-12(2)-19(1)\S-V\ICK10(2)_std.dgn

NPS NO.	REG	STATE	PROJECT	SHEET NO.
306 / 41,918	SE	MS	PRA-VICK 10(2), 12(2), 19(1)	S05

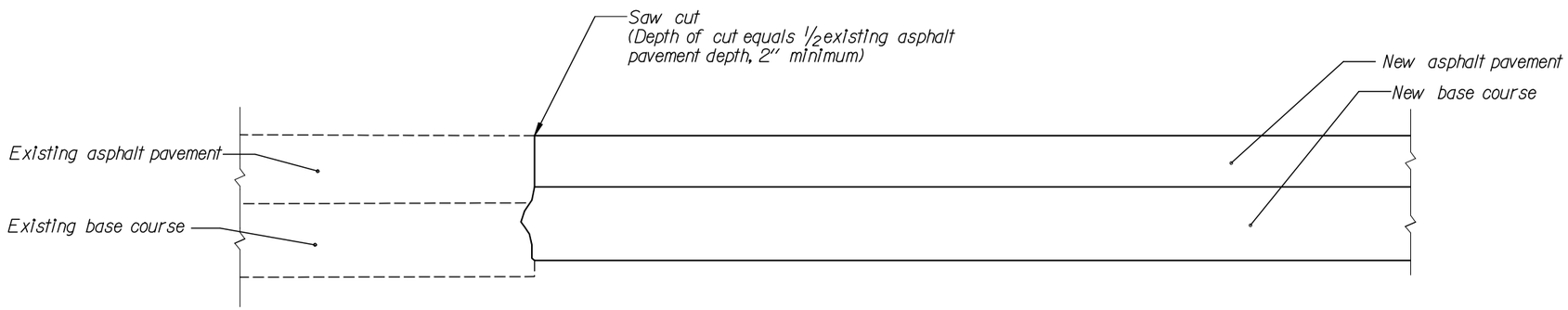

NEW PAVEMENT

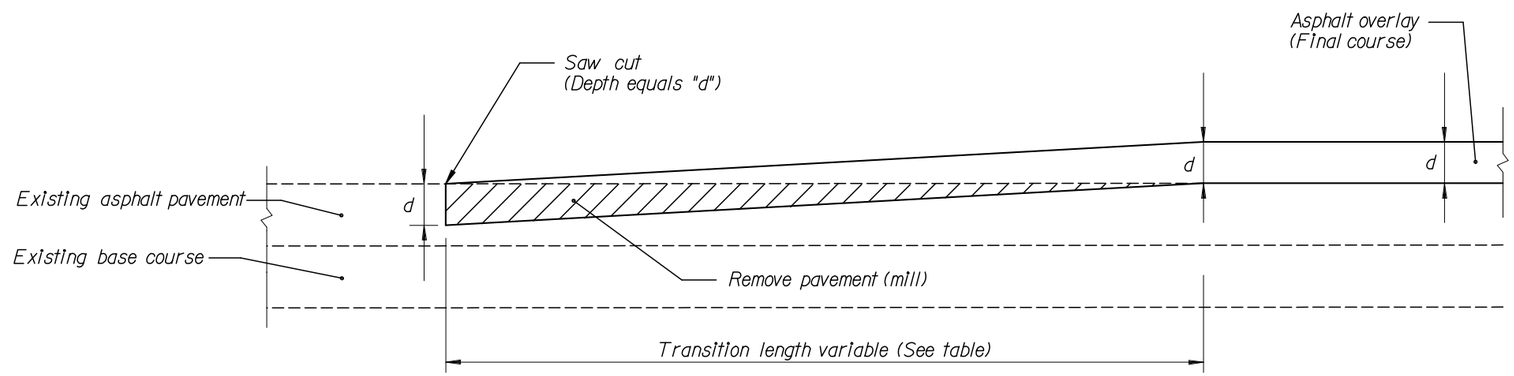

OVERLAY

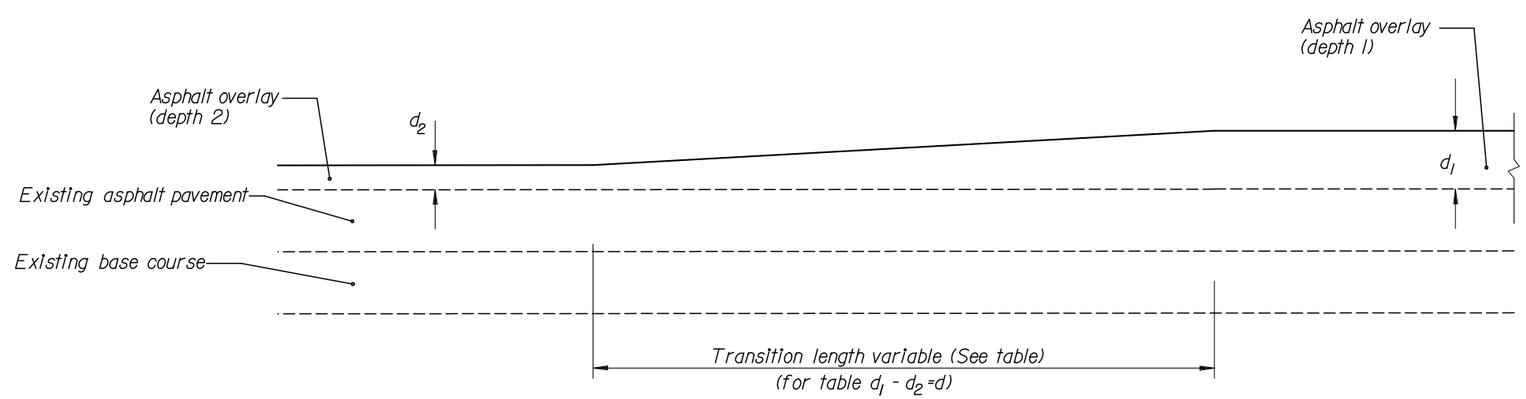

OVERLAY - DEPTH TRANSITIONS

d - Inches	Transition Length - Feet
1	20
1.5	30
2	40
2.5	50
3	60

NOT TO SCALE

U.S. DEPARTMENT OF TRANSPORTATION
FEDERAL HIGHWAY ADMINISTRATION
EASTERN FEDERAL LANDS HIGHWAY DIVISION

DETAIL

PAVEMENT TRANSITIONS

DETAIL APPROVED FOR USE --/----

REVISED:

DETAIL E401-1

5/20/2008 3:13:44 PM T:\HWY\AK\Vicksburg\ParkVICK 10(2)-12(2)-19(1)\S-VICK10(2)_std.dgn

NPS NO.	REG	STATE	PROJECT	SHEET NO.
306 / 41,918	SE	MS	PRA-VICK 10(2), 12(2), 19(1)	S06

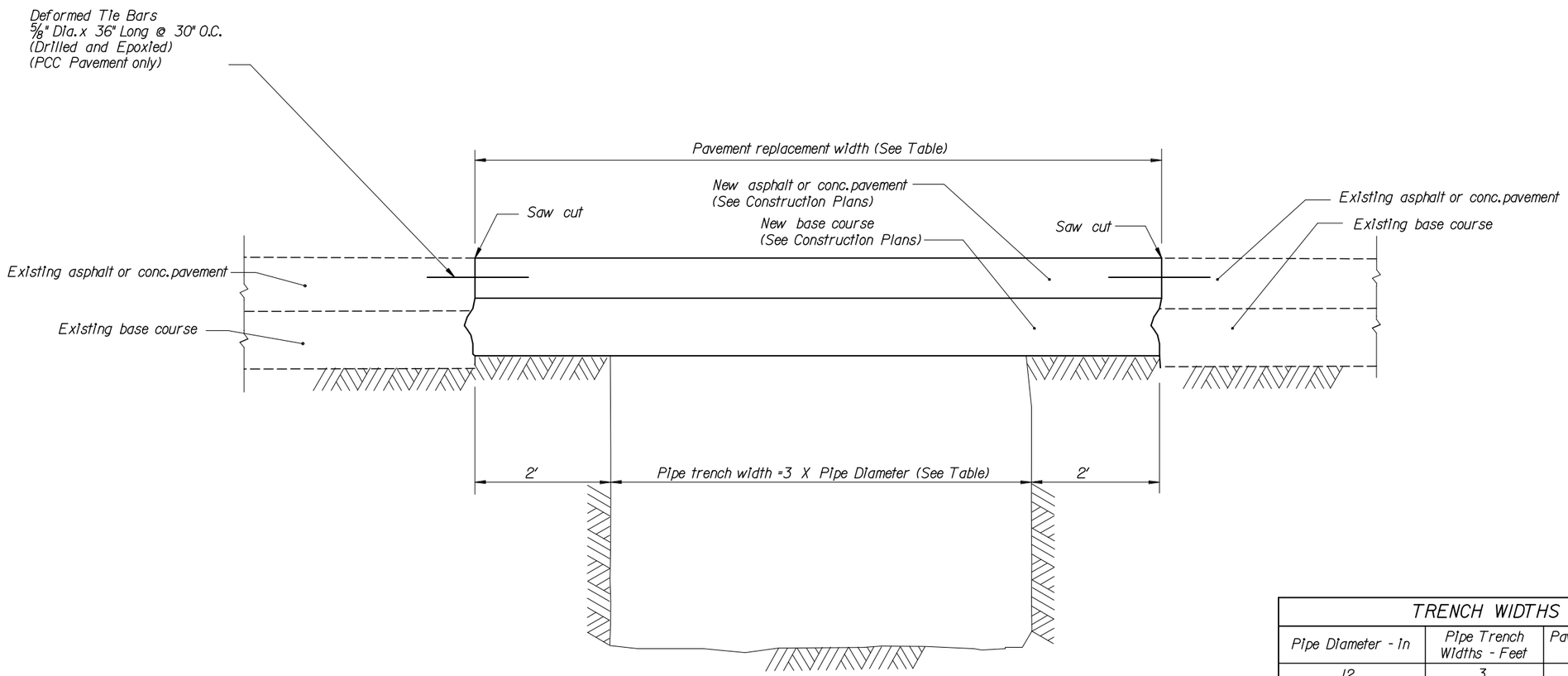

TRENCH WIDTHS		
Pipe Diameter - in	Pipe Trench Widths - Feet	Pavement Replacement Widths - Feet
12	3	7
18	4.5	8.5
24	6	10
36 (single culvert)	9	13
36 (double culvert)	14	18

NOT TO SCALE

U.S. DEPARTMENT OF TRANSPORTATION
FEDERAL HIGHWAY ADMINISTRATION
EASTERN FEDERAL LANDS HIGHWAY DIVISION

DETAIL

PAVEMENT REPLACEMENT DETAIL WHERE PIPE WORK IS PERFORMED

DETAIL APPROVED FOR USE --/----

REVISED:

DETAIL
E401-A

5/20/2008 3:15:24 PM T:\HWY\AK\VicksMill\Part\VICK 10(2)-12(2)-19(1)\S-VICK10(2)_std.dgn

NPS NO.	REG	STATE	PROJECT	SHEET NO.
306 / 41,918	SE	MS	PRA-VICK 10(2), 12(2), 19(1)	S07

NOTES:

1. Install joint sealer & compatible backer rod in accordance with manufacturer's instructions & recommendations.

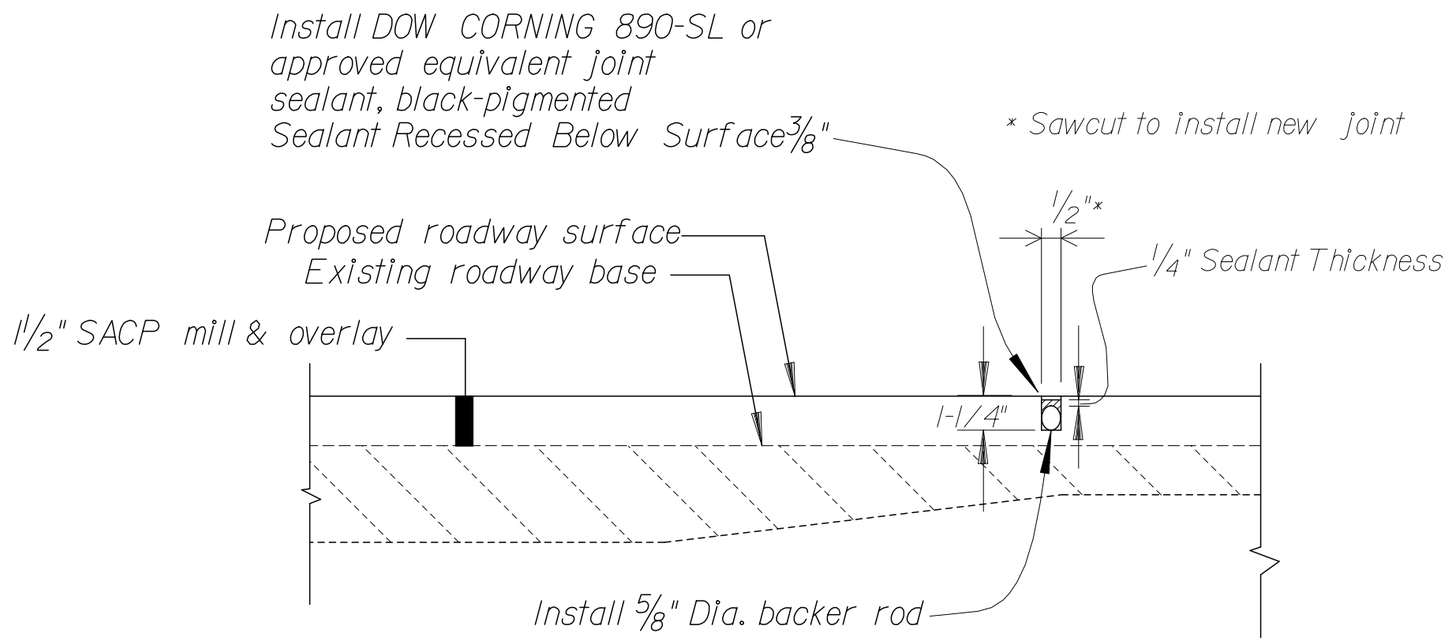

SAWCUTTING AND JOINT SEALING AT BRIDGE ENDS, BRIDGE APPROACH SLABS AND BRIDGE EXPANSION JOINTS

NOT TO SCALE

U.S. DEPARTMENT OF TRANSPORTATION
FEDERAL HIGHWAY ADMINISTRATION
EASTERN FEDERAL LANDS HIGHWAY DIVISION

DETAIL

SAWCUTTING AND JOINT SEALING AT BRIDGE APPROACH SLABS, BRIDGE ENDS AND BRIDGE EXPANSION JOINTS

DETAIL APPROVED FOR USE --/----

REVISED:

DETAIL E414-A

5/20/2008 3:15:34 PM T:\HWY\AK\VicksMillPark\VICK 10(2)-12(2)-19(1)\S-VICK10(2)_std.dgn

NPS NO.	REG	STATE	PROJECT	SHEET NO.
306 / 41,918	SE	MS	PRA-VICK 10(2),12(2),19(1)	S08

NOTE:

1. Lap longitudinal reinforcement not less than 13-inches.
2. Lap transverse reinforcement not less than 9-inches.
3. Eliminate all longitudinal and transverse reinforcing steel, wire, or bars where plain portland cement concrete pavement or base is required.
4. Provide the same type of dowel assemblies and tie bars for joints in plain portland cement concrete pavement as shown for joints in reinforced pavement.
5. Space transverse expansion joints at a minimum of 40 feet.
6. See Standard 501-2A for joint details and joint sealing details.

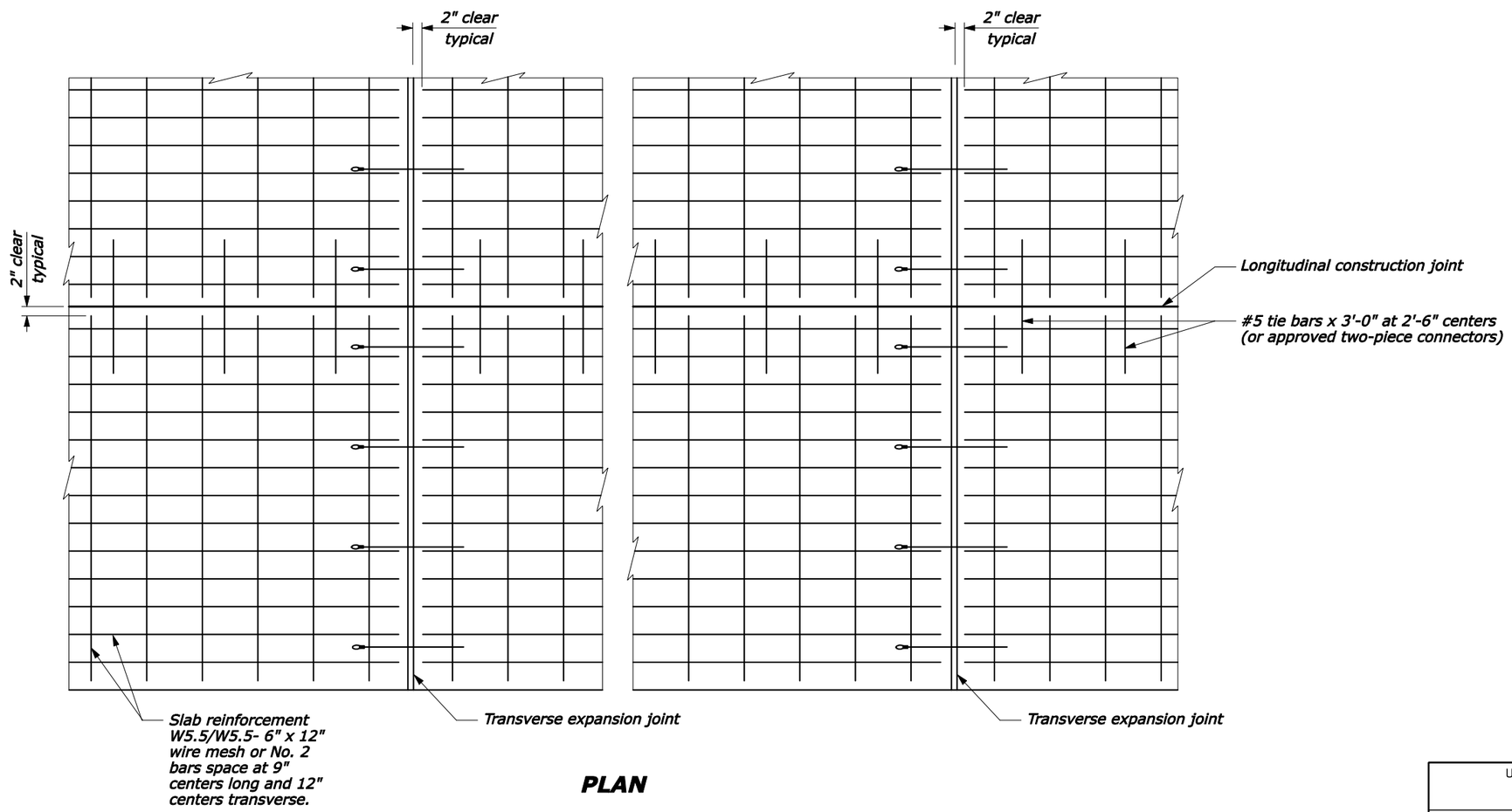

PLAN

NO SCALE

U.S. DEPARTMENT OF TRANSPORTATION
FEDERAL HIGHWAY ADMINISTRATION
FEDERAL LANDS HIGHWAY

U.S. CUSTOMARY STANDARD

PORTLAND CEMENT CONCRETE PAVEMENT

STANDARD APPROVED FOR USE --/----

REVISED:
DRAFT: 9/2004

STANDARD 501-1A

5/20/2008 3:15:46 PM

NPS NO.	REG	STATE	PROJECT	SHEET NO.
306 / 41,918	SE	MS	PRA-VICK 10(2),12(2),19(1)	S09

NOTE:

1. Anchor tie bars and dowels into existing concrete pavement with epoxy resin adhesive.
2. Space expansion joints a minimum of 40 feet.
3. W= 3/8" for longitudinal contraction joints and 3/4" for transverse expansion and contraction joints field conditions require larger openings.
4. Maintain joint sealant shape factor of 1:1 except that when silicone sealant is used, the width to depth (W:D) shape factor is 1:2.

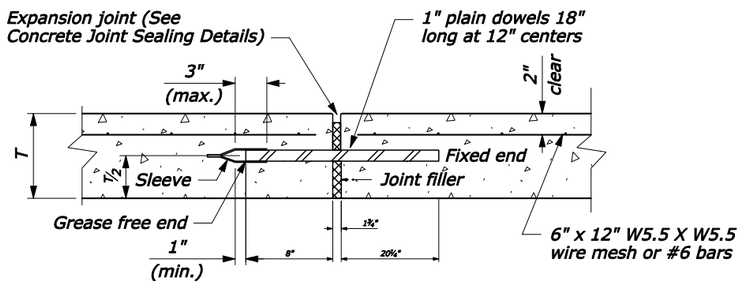

TRANSVERSE EXPANSION JOINT

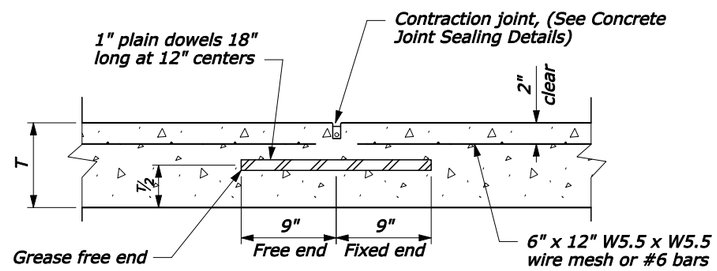

TRANSVERSE CONTRACTION JOINT

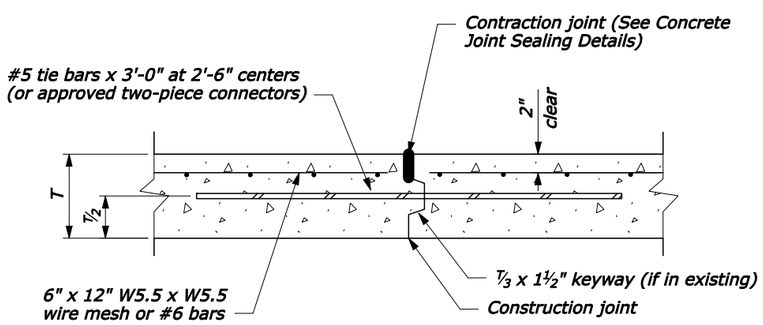

LONGITUDINAL CONSTRUCTION JOINT

REINFORCED PORTLAND CEMENT CONCRETE PAVEMENT JOINT DETAILS

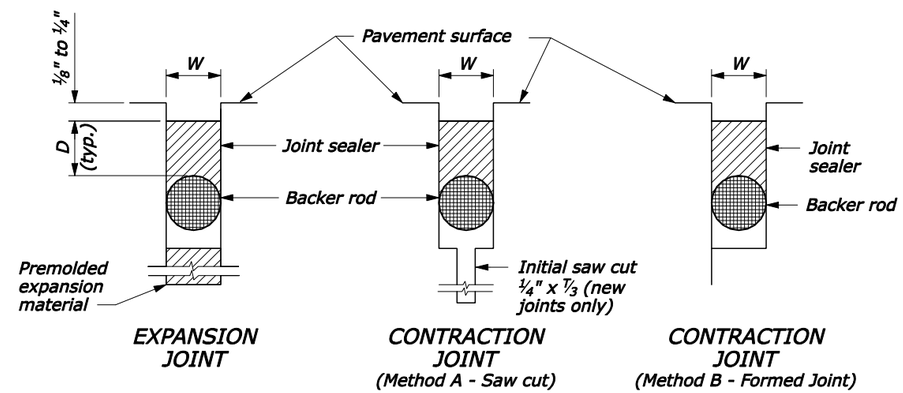

REINFORCED PORTLAND CEMENT CONCRETE PAVEMENT JOINT SEALING DETAILS

U.S. DEPARTMENT OF TRANSPORTATION
FEDERAL HIGHWAY ADMINISTRATION
FEDERAL LANDS HIGHWAY

U.S. CUSTOMARY STANDARD

PORTLAND CEMENT CONCRETE PAVEMENT JOINTS

STANDARD APPROVED FOR USE --/----

REVISED:

DRAFT: 9/2004

STANDARD 501-2A

5/20/2008 3:16:08 PM T:\HWY\AK\VicksMilPark\VICK 10(2)-12(2)-19(1)\S-VICK10(2)_std.dgn

NPS NO.	REG	STATE	PROJECT	SHEET NO.
306 / 41,918	SE	MS	PRA-VICK 10(2),12(2),19(1)	S10

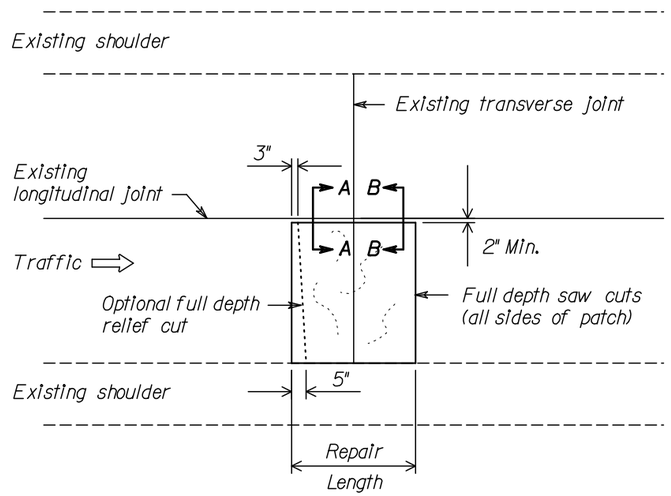

Notes:

1. Shoulder joints may be cut directly into the existing joint.
2. Make cuts running parallel and adjacent to a lane of traffic a minimum of 2-inches from the existing joint.
3. Saw cuts may be made into the shoulder.
4. If it is determined that the keyway is formed in the adjacent pavement section, the subsequent full depth saw cut may be made on the longitudinal joint.

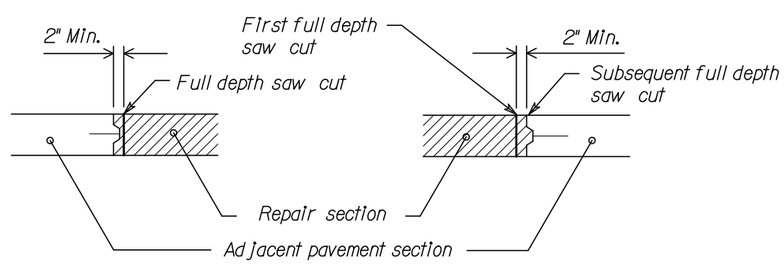

SECTION A-A

KEYWAY IN REPAIR SECTION

SECTION B-B

KEYWAY IN ADJACENT PAVEMENT SECTION

REINFORCED PORTLAND CEMENT CONCRETE PAVEMENT
SAW CUTS FOR LIFT OUT METHOD

U.S. DEPARTMENT OF TRANSPORTATION
FEDERAL HIGHWAY ADMINISTRATION
FEDERAL LANDS HIGHWAY

STANDARD

CONCRETE PAVEMENT REMOVAL METHODS

STANDARD APPROVED FOR USE --/----

REVISED:

STANDARD 501-4

5/20/2008 3:16:18 PM T:\HWY\AK\VicksMillPark\VICK 10(2)-12(2)-19(1)\S-VICK10(2)_std.dgn

NPS NO.	REG	STATE	PROJECT	SHEET NO.
306 / 41,918	SE	MS	PRA - VICK 10(2),12(2),19(1)	S11

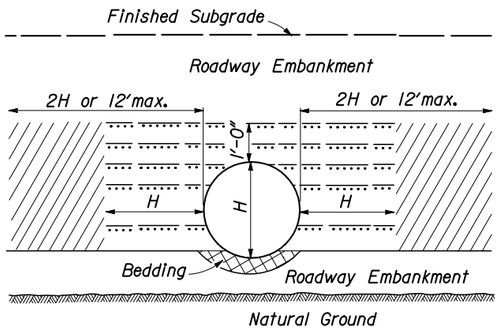

ABOVE NATURAL GROUND

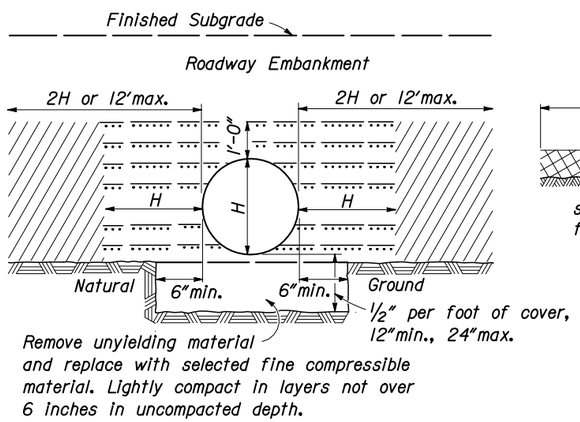

ON UNYIELDING MATERIAL

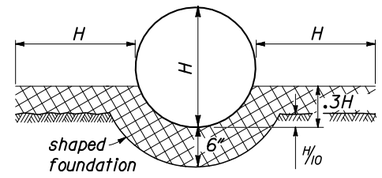

CLASS B BEDDING

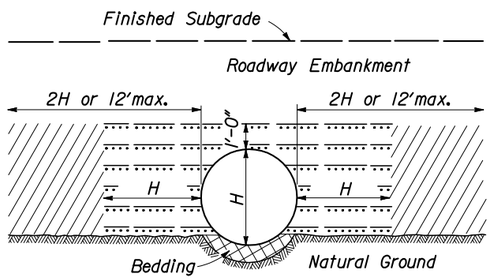

ON NATURAL GROUND

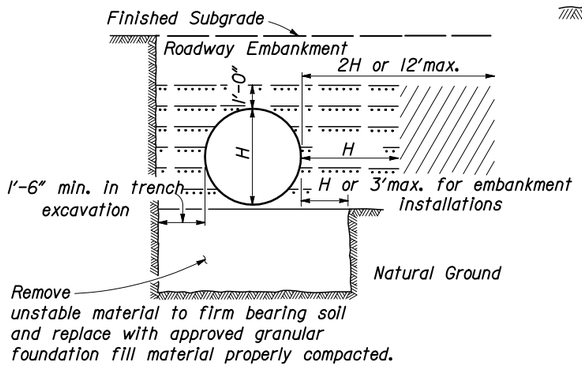

ON UNSTABLE MATERIAL

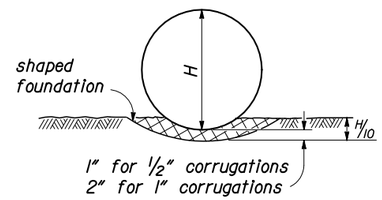

CLASS C BEDDING

NOTES:

1. When directed, camber pipe culverts upward from a chord through the inlet and outlet inverts an ordinate amount equal to 1% of the pipe length. Develop camber on a parabolic curve. If the midpoint elevation on the parabolic curve as designed exceeds the elevation of the inlet invert, reduce the amount of camber or increase the pipe culvert gradient.

2. H equals the diameter of all round pipe culverts or the rise dimension of all pipe arch culverts.

3. Bed pipe culverts 48 inches and larger in diameter and pipe arch culverts 38 inches and greater in rise in Class B Bedding. Bed smaller pipe culverts in Class B or C Bedding.

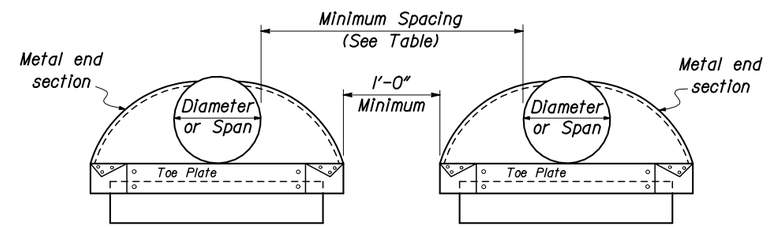

MINIMUM SPACING	
DIAMETER or SPAN INCHES	SPACING INCHES
UP to 48	24
48 and UP	1/2 Diameter or Span or 36 whichever is less

MULTIPLE PIPE INSTALLATION

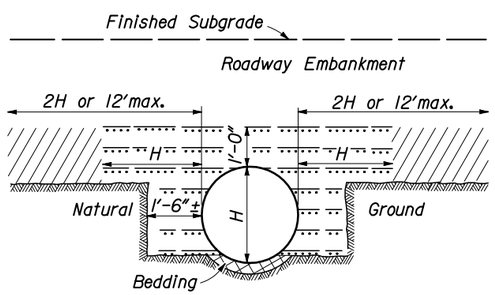

ABOVE AND BELOW
NATURAL GROUND

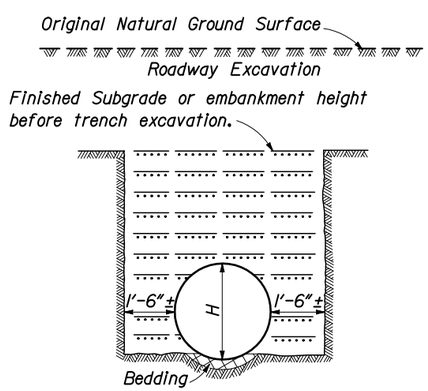

BELOW NATURAL GROUND OR
TRENCH EXCAVATION IN EMBANKMENT

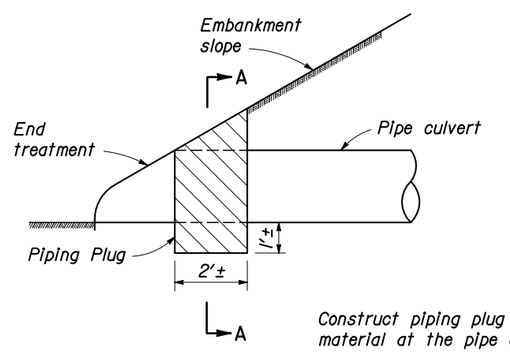

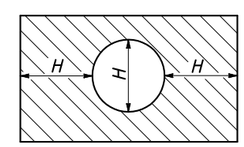

SECTION A-A

Construct piping plug of impermeable backfill material at the pipe culvert inlet where granular material is used for backfill.

PIPING PLUG

Bedding Material

Embankment material placed in layers not exceeding 6" compacted depth.

Approved granular material or fine compactable soil placed in layers not exceeding 6" compacted depth.

NO SCALE

U.S. DEPARTMENT OF TRANSPORTATION
FEDERAL HIGHWAY ADMINISTRATION
EASTERN FEDERAL LANDS HIGHWAY DIVISION

STANDARD

METAL AND PLASTIC PIPE CULVERT BEDDING

STANDARD APPROVED FOR USE --/----

REVISED:

STANDARD 602-3

5/20/2008 3:16:29 PM T:\HWY\AKV\Vicksburg\ParkV\ICK 10(2)-12(2)-19(1)\S-V\ICK10(2)_std.dgn

NPS NO.	REG	STATE	PROJECT	SHEET NO.
306 / 41,918	SE	MS	PRA - VICK 10(2),12(2),19(1)	S12

POLYETHYLENE (PE) PLASTIC ROUND PIPE CULVERT

FILL HEIGHT TABLE AND MINIMUM CELL CLASSIFICATION NUMBER PER ASTM D 3350

SMOOTH WALL, CORRUGATED AND RIBBED PIPE CULVERT

PIPE SIZE DIAMETER INCHES	MINIMUM COVER INCHES	SMOOTH WALL (SOLID WALL) CELL CLASSIFICATION NUMBER 335434C MINIMUM WALL THICKNESS IN INCHES 0.607	0.857	0.923	1.154	1.385	1.292	1.477
		MAXIMUM FILL HEIGHT IN FEET						
12	12	57						
18	12		52					
24	12			38				
30	12				38			
36	12					38		
42	12						27	
48	12							27

PIPE SIZE DIAMETER INCHES	MINIMUM COVER INCHES	CORRUGATED CELL CLASS. NO. 315412C MAX. FILL HEIGHT IN FT.	CELL CLASS. NO. 324420C MAX. FILL HEIGHT IN FT.
12	12	11	10
15	12	11	10
18	12	12	10
24	12	12	10
30	12	12	10
36	12	11	10

PIPE SIZE DIAMETER INCHES	MINIMUM COVER INCHES	RIBBED CELL CLASS. NO. 334433C MAX. FILL HEIGHT IN FEET	CELL CLASS. NO. 335434C MAX. FILL HEIGHT IN FEET
18	12	18	24
24	12	22	28
30	12	22	28
36	12	25	31
42	12	21	27
48	12	21	26

POLYVINYL CHLORIDE (PVC) PLASTIC ROUND PIPE CULVERT

FILL HEIGHT TABLE AND MINIMUM CELL CLASSIFICATION NUMBER PER ASTM D 1784

SMOOTH WALL AND RIBBED PIPE CULVERT

PIPE SIZE DIAMETER INCHES	MINIMUM COVER INCHES	SMOOTH WALL (SOLID WALL) CELL CLASS. NO. 12454C MIN. WALL THICKNESS IN INCHES 0.358	0.438	CELL CLASS. NO. 12364C MIN. WALL THICKNESS IN INCHES 0.358	0.438
		MAX. FILL HEIGHT IN FEET			
12	12	65		69	
15	12		62		66

PIPE SIZE DIAMETER INCHES	MINIMUM COVER INCHES	RIBBED CELL CLASS. NO. 12454C MAX. FILL HEIGHT IN FEET	CELL CLASS. NO. 12364C MAX. FILL HEIGHT IN FEET
12	12	37	26
15	12	32	22
18	12	33	23
24	12	29	21
30	12	28	20
36	12	27	19
42	12	26	18
48	12	24	17

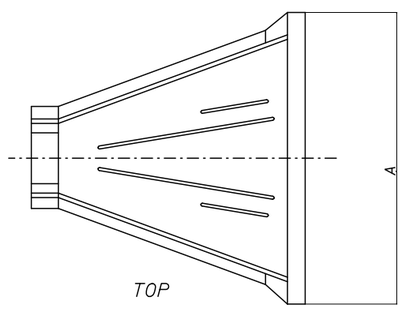

TOP

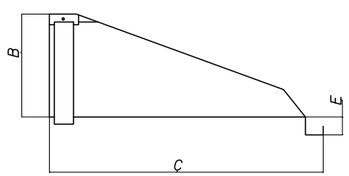

SIDE

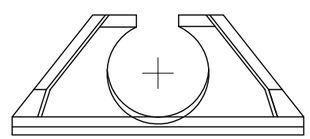

FRONT

PLASTIC PIPE END SECTION				
PIPE SIZE DIAMETER	DIMENSIONS A	B	C	E
12	42	15	33	6
15	46	25	45	6
18	54	29	55	6
24	64	37	65	6
30	88	36	64	6
36	88	43	67	6

NOTES:

1. When directed, camber pipe culverts upward from a chord through the inlet and outlet inverts an ordinate amount equal to 1% of the pipe length. Develop camber on a parabolic curve. If the midpoint elevation on the parabolic curve as designed exceeds the elevation of the inlet invert, reduce the amount of camber or increase the pipe culvert gradient.

2. Measure minimum cover from the top of the pipe culvert to the subgrade for flexible pavements, and to the top of the pavement for rigid pavements. Measure maximum fill height from the top of the pipe to the top of the pavement for both flexible and rigid pavement.

U.S. DEPARTMENT OF TRANSPORTATION
FEDERAL HIGHWAY ADMINISTRATION
EASTERN FEDERAL LANDS HIGHWAY DIVISION

STANDARD

PLASTIC PIPE CULVERT

STANDARD APPROVED FOR USE --/----

REVISED:

STANDARD 602-5

5/20/2008 3:16:44 PM T:\HWY\AK\Vicksburg\Park\VICK (02)\H2(2)-19(1)\S4\Q602(02)_std.dgn

NPS NO.	REG	STATE	PROJECT	SHEET NO.
306 / 41,918	SE	MS	PRA - VICK 10(2),12(2),19(1)	S13

CONCRETE ROUND PIPE CULVERT

FILL HEIGHT AND PIPE CLASS TABLE

PIPE SIZE DIAMETER INCHES	MINIMUM COVER INCHES	EMBANKMENT CLASS II	EMBANKMENT CLASS III	EMBANKMENT CLASS IV	EMBANKMENT CLASS V	TRENCH CLASS II	TRENCH CLASS III	TRENCH CLASS IV	TRENCH CLASS V
		MAXIMUM FILL HEIGHT ABOVE TOP OF PIPE IN FEET							
12	12	11	11	16	23	18	18	26	37
18	12	10	10	25	39	14	14	31	45
24	12	11	11	15	31	15	15	22	40
30	12	9	13	16	35	13	17	20	46
36	12	9	9	20	41	11	14	26	56
48	12	12	14	26	44	16	17	31	50
60	12	15	17	28	44	15	20	32	50
72	12	13	17	31	41	16	20	35	49
84	12	13	19	31		15	23	37	
96	12	13	20			16	24		
108	12	16	20			19	26		

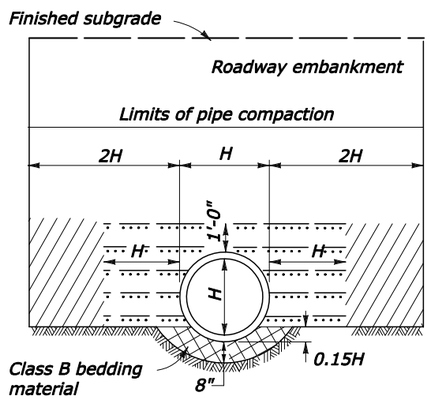

EMBANKMENT INSTALLATION

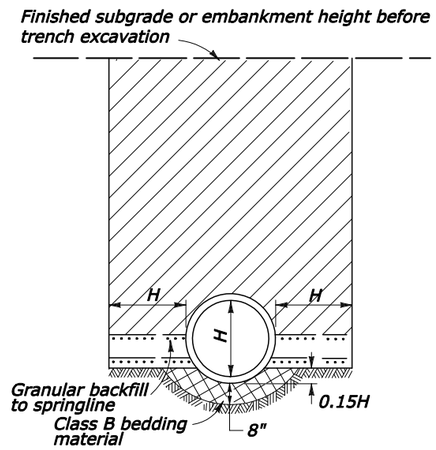

TRENCH INSTALLATION

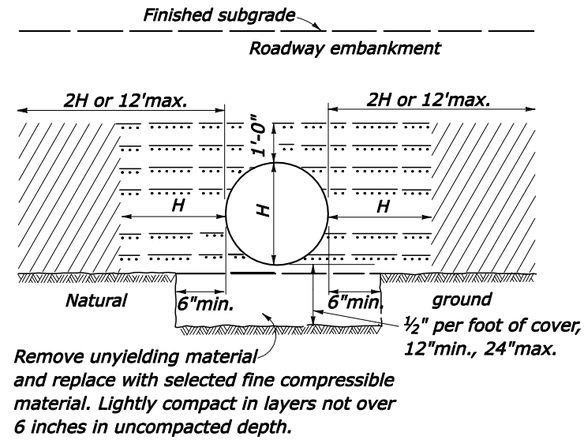

ON UNYIELDING MATERIAL

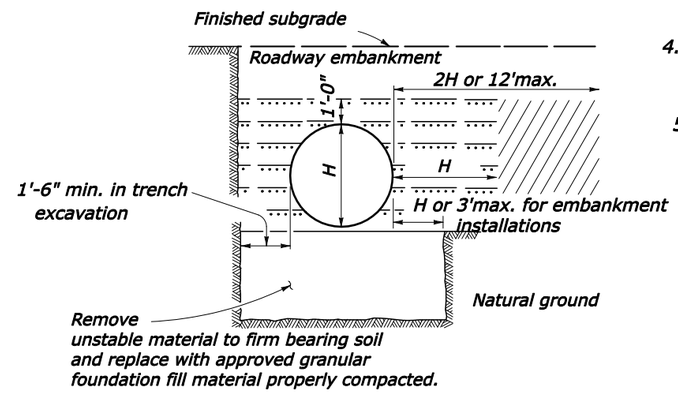

ON UNSTABLE MATERIAL

NOTE:

1. When directed, camber pipe culverts upward from a chord through the inlet and outlet inverts an ordinate amount equal to 1% of the pipe length. Develop camber on a parabolic curve. If the midpoint elevation on the parabolic curve as designed exceeds the elevation of the inlet invert, reduce the amount of camber or increase the pipe culvert gradient.
2. Measure minimum cover from the top of the pipe culvert to the subgrade for flexible pavements, and to the top of the pavement for rigid pavements. Measure maximum fill height from the top of the pipe to the top of the pavement for both flexible and rigid pavements.
3. Pipe compaction limits shown are for pipe installation in an embankment. For pipe installation in a trench, the compaction limits shall be the walls of the trench.
4. When grades exceed 10%, install supplemental concrete pipe ties on pipe culvert or install bell and spigot pipe.
5. Maximum fill heights for pipe culvert installations may be increased on approval of site-specific structural pipe designs meeting the criteria of AASHTO Standard Specifications for Highway Bridges.

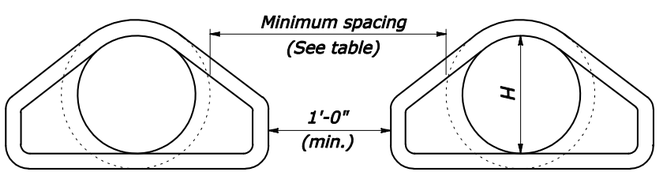

MINIMUM SPACING		
DIAMETER INCHES	EMBANKMENT	TRENCH
12-36	15"	2H
36-96	H/2	72"
OVER 96	48"	72"

MULTIPLE ROUND PIPE INSTALLATION

LEGEND:

- Bedding material
- Embankment material placed in layers not exceeding 6" compacted depth.
- Approved granular material or fine compactable soil placed in layers not exceeding 6" compacted depth.

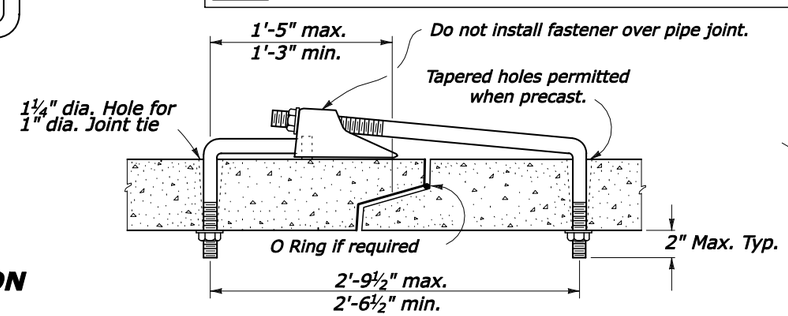

SUPPLEMENTAL CONCRETE PIPE TIE

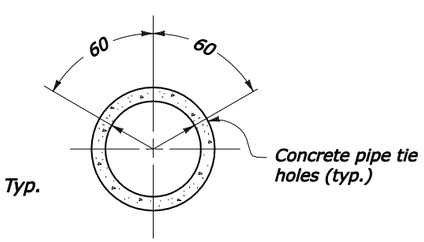

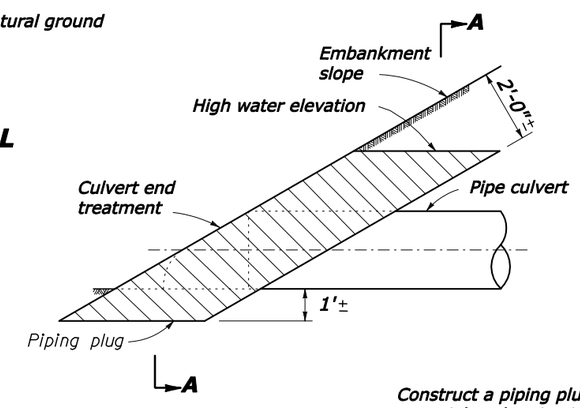

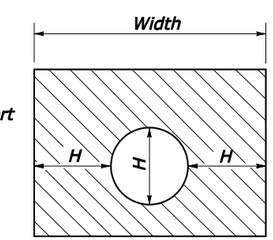

SECTION A-A

Construct a piping plug of impermeable backfill material at the pipe inlet where granular material is used for backfill. Width may be adjusted to tie into impervious material.

PIPING PLUG

NO SCALE

U.S. DEPARTMENT OF TRANSPORTATION
FEDERAL HIGHWAY ADMINISTRATION
EASTERN FEDERAL LANDS HIGHWAY DIVISION

DETAIL

CONCRETE PIPE CULVERT INSTALLATION

STANDARD APPROVED FOR USE --/----

REVISED:

DETAIL E602-7

5/20/2008 3:16:56 PM T:\HWY\AK\VicksMillPark\VICK 10(2)-12(2)-19(1)\S-V\CK10(2)_std.dgn

NPS NO.	REG	STATE	PROJECT	SHEET NO.
306 / 41,918	SE	MS	PRA - VICK 10(2),12(2),19(1)	S14

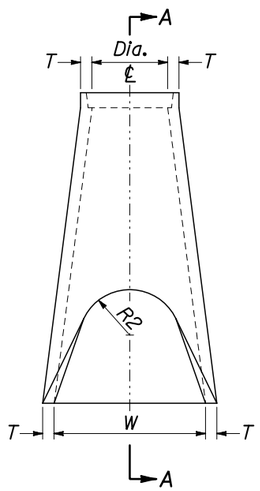

PLAN

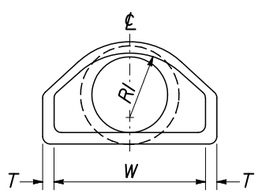

ELEVATION

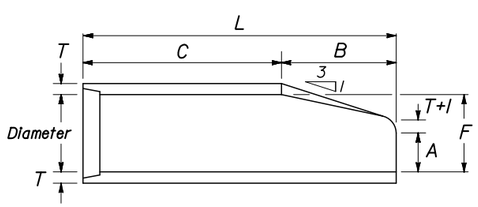

SECTION A-A

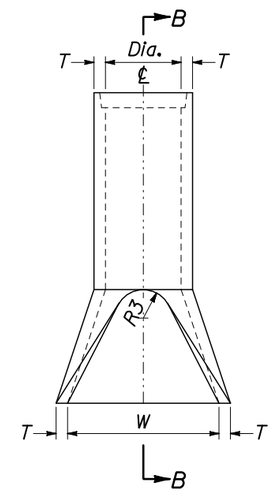

PLAN

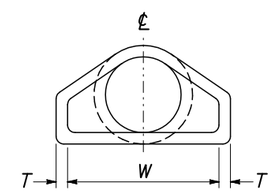

ELEVATION

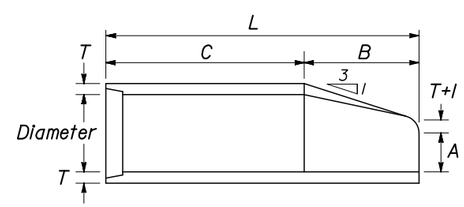

SECTION B-B

NOTES:

1. *Variations in design and dimensions are permitted to allow for manufacturer's standards.*
2. *Fabricate the outlet end section with a groove end and the inlet end section with a tongue end.*
3. *Warp embankment slopes to match the slope of the flared end section.*

END SECTIONS FOR ROUND PIPE CULVERT

PIPE SIZE	DIMENSIONS									
DIAMETER INCHES	T INCHES	A INCHES	B INCHES	C INCHES	L INCHES	W INCHES	F INCHES	R1 INCHES	R2 INCHES	R3 INCHES
12	2	4	24	48 7/8	72 7/8	24	13	10 1/8	9	4
15	2 1/4	6	27	46	73	30	16	12 1/2	11	6
18	2 1/2	9	27	46	73	36	19	15 1/2	12	7 1/2
21	2 3/4	9	36	37	73	42	22	16 1/2	13	5
24	3	9 1/2	43 1/2	30	73 1/2	48	25	16 13/16	14	8
27	3 1/4	10 1/2	48	25 1/2	73 1/2	54	28	--	14 1/2	9
30	3 1/2	12	54	19 3/4	73 3/4	60	31	18 1/2	15	8
33	3 3/4	13 1/2	58 1/2	37 1/2	96	66	34	23 3/4	17 1/2	9
36	4	15	63	33	96	72	37	23 3/16	20	11
42	4 1/2	21	63	33	96	78	43	--	22	11
48	5	24	72	24	96	84	49	--	22	12

NO SCALE

U.S. DEPARTMENT OF TRANSPORTATION
FEDERAL HIGHWAY ADMINISTRATION
EASTERN FEDERAL LANDS HIGHWAY DIVISION

STANDARD

CONCRETE END SECTION FOR ROUND PIPE

STANDARD APPROVED FOR USE --/----

REVISED:

STANDARD 602-8

5/20/2008 3:17:08 PM T:\HWY\AK\VicksMillPark\VICK 10(2)-12(2)-19(1)\S-VICK10(2)_std.dgn

NPS NO.	REG	STATE	PROJECT	SHEET NO.
306 / 41,918	SE	MS	PRA - VICK 10(2),12(2),19(1)	S15

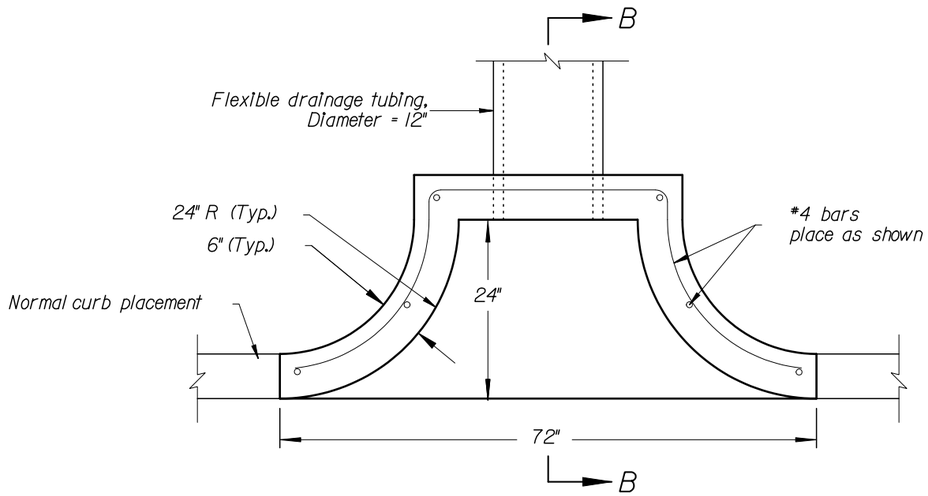

PLAN

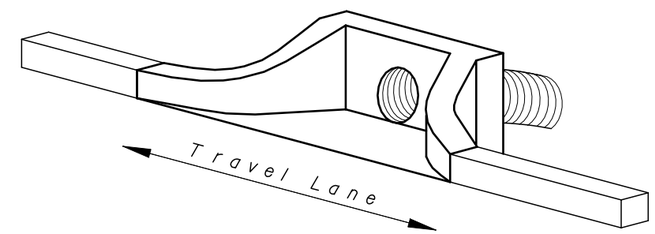

ISOMETRIC VIEW

NOTES:

1. Unless otherwise shown, dimensions are in inches.
2. Chamfer all exposed corners 3/4".
3. Concrete cover measured from the face of the concrete to the face of any reinforcing bar is minimum 2" unless shown otherwise.

$h_{approach\ curb}$	wing height
3"	9"
6"	6"

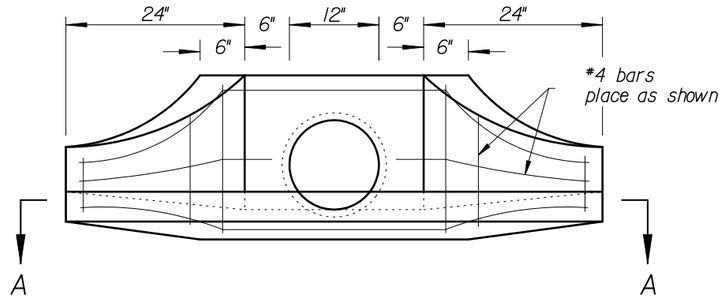

ELEVATON

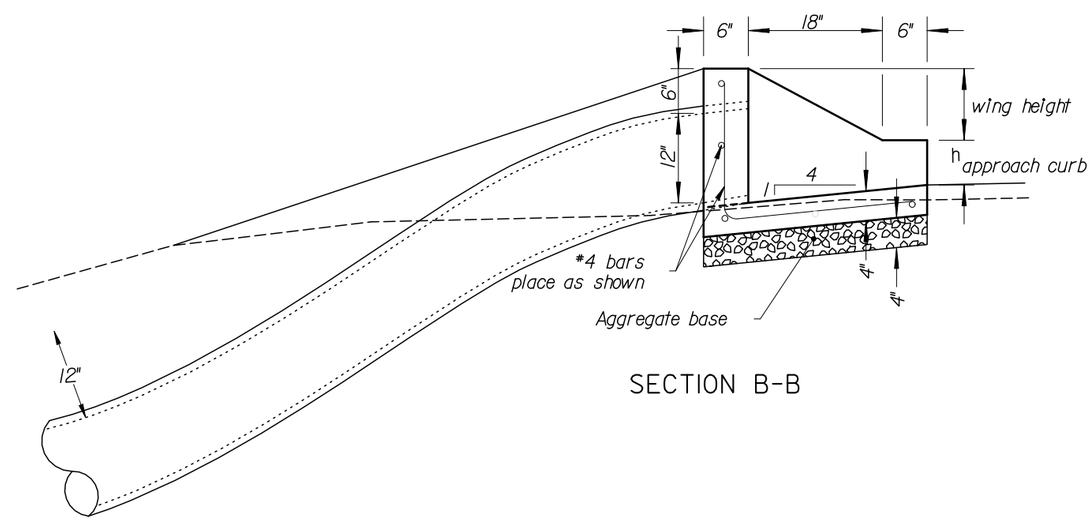

SECTION B-B

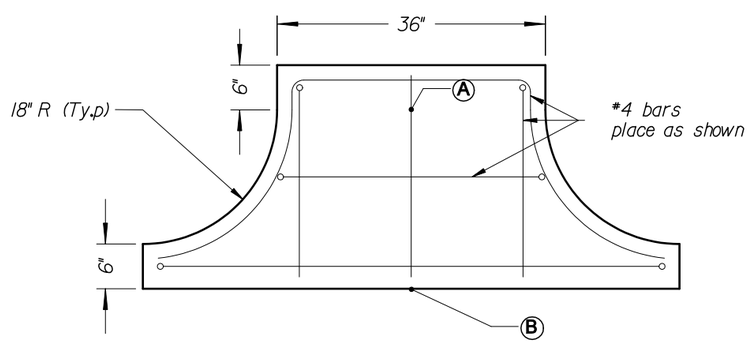

SECTION A-A
BOTTOM POUR

NOTE: POINT Ⓐ IS 6" LOWER THAN POINT Ⓑ .

NO SCALE

U.S. DEPARTMENT OF TRANSPORTATION
FEDERAL HIGHWAY ADMINISTRATION
EASTERN FEDERAL LANDS HIGHWAY DIVISION

DETAIL

FUNNEL DRAIN INLET, TYPE A

STANDARD APPROVED FOR USE --/----

REVISED:

DETAIL E604-A

5/20/2008 3:17:27 PM T:\HWY\ARK\Vicksburg\Park\VICK 10(2)-12(2)-19(1)\S-VICK10(2)_std.dgn

NPS NO.	REG	STATE	PROJECT	SHEET NO.
306 / 41,918	SE	MS	PRA - VICK 10(2),12(2),19(1)	S16

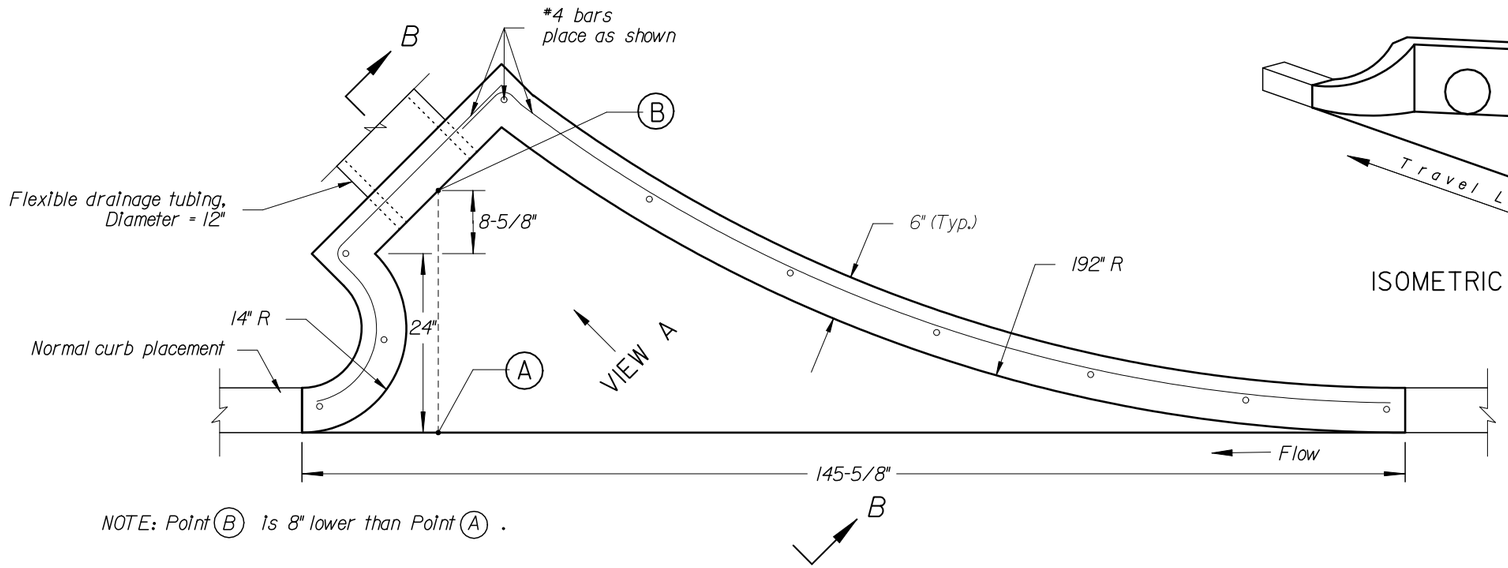

NOTE: Point (B) is 8" lower than Point (A) .

PLAN

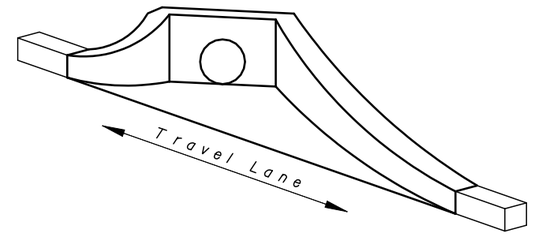

ISOMETRIC VIEW

NOTES:

1. Unless otherwise shown, dimensions are in inches.
2. Chamfer all exposed corners 3/4".
3. Concrete cover measured from the face of the concrete to the face of any reinforcing bar is minimum 2" unless shown otherwise.

$h_{approach\ curb}$	wing height
3"	9"
6"	6"

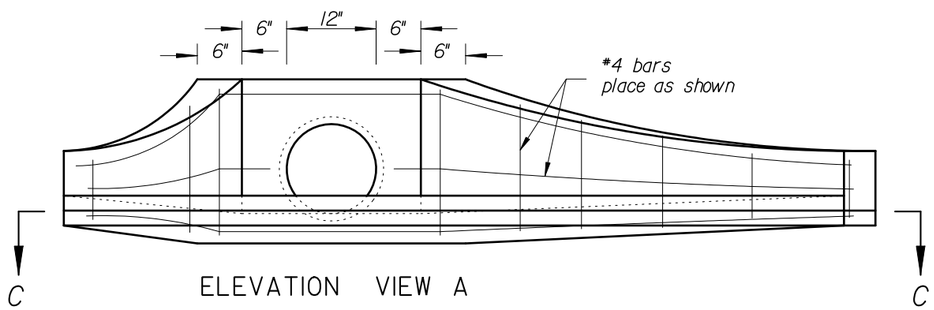

ELEVATION VIEW A

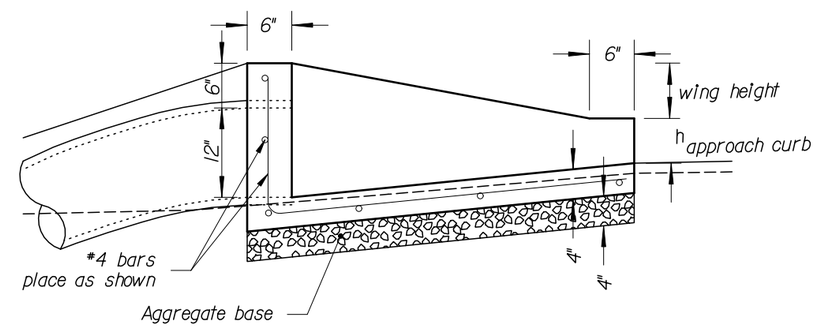

SECTION B-B

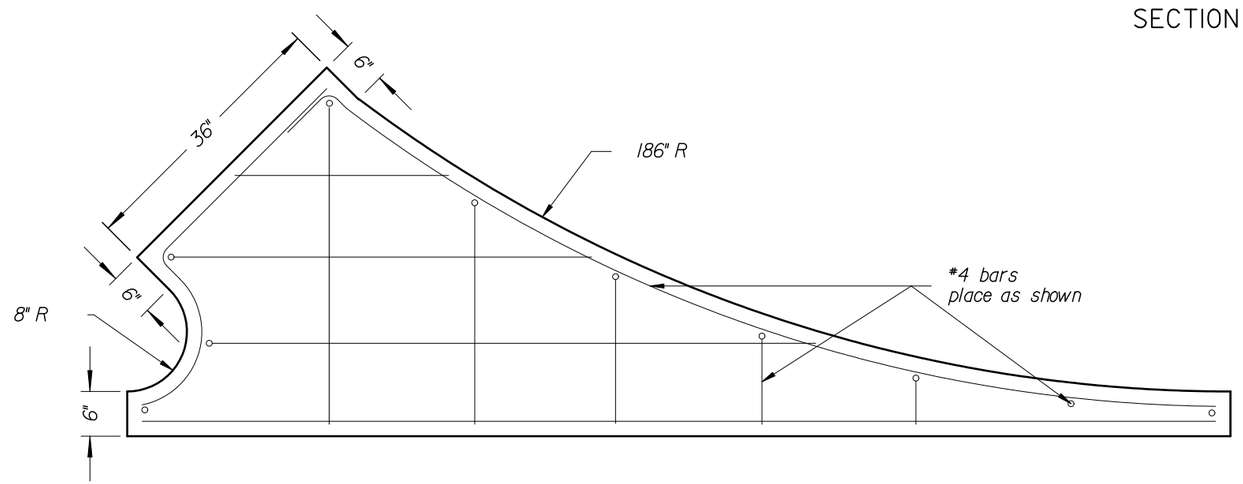

SECTION C-C

NO SCALE

U.S. DEPARTMENT OF TRANSPORTATION
FEDERAL HIGHWAY ADMINISTRATION
EASTERN FEDERAL LANDS HIGHWAY DIVISION

DETAIL
FUNNEL DRAIN INLET,
TYPE B

STANDARD APPROVED FOR USE --/----

REVISED:

DETAIL
E604-B

5/20/2008 3:17:38 PM T:\HWY\AK\Vicksburg\ParkV\ICK 10(2)-12(2)-19(1)\S-V1CK10(2)_std.dgn

NPS NO.	REG	STATE	PROJECT	SHEET NO.
306 41,918	SE	MS	PRA - VICK 10(2),12(2),19(1)	S17

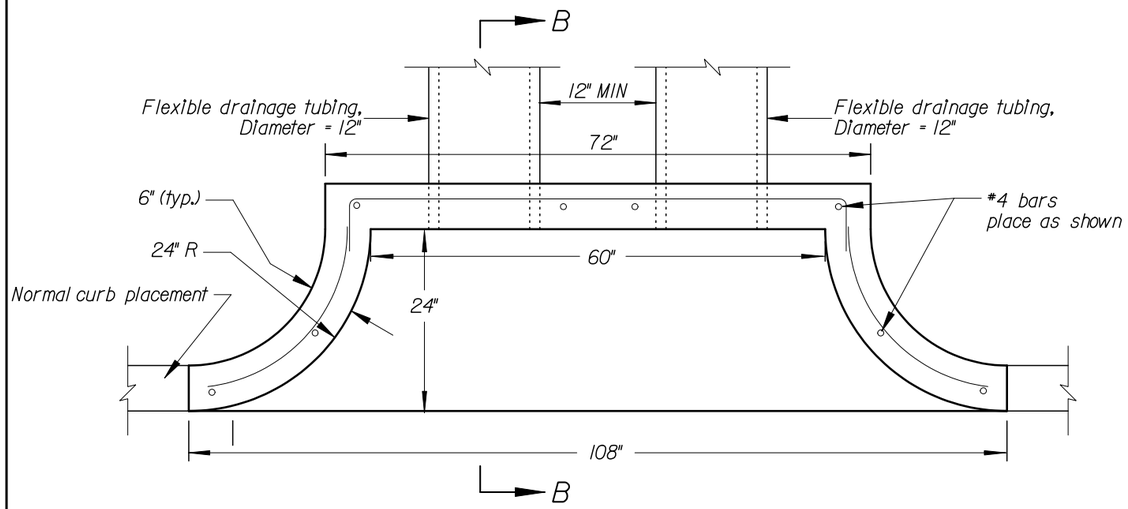

PLAN

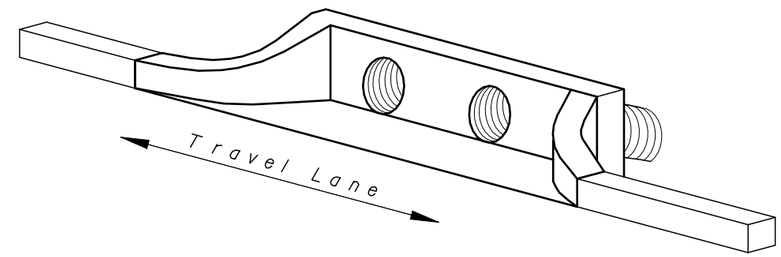

ISOMETRIC VIEW

NOTES:

1. Unless otherwise shown, dimensions are in inches.
2. Chamfer all exposed corners 3/4".
3. Concrete cover measured from the face of the concrete to the face of any reinforcing bar is minimum of 2" unless shown otherwise.

$h_{approach\ curb}$	wing height
3"	9"
6"	6"

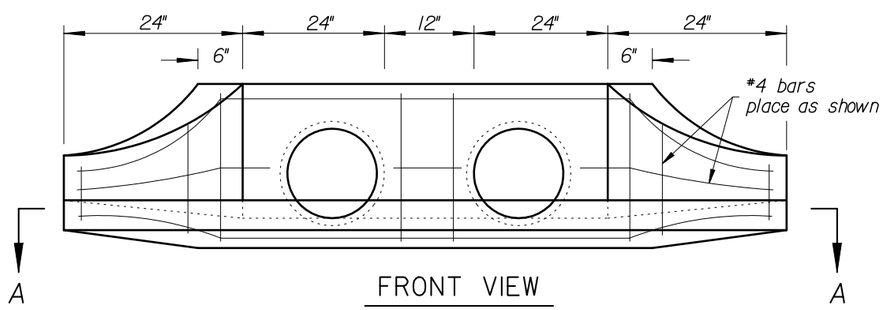

FRONT VIEW

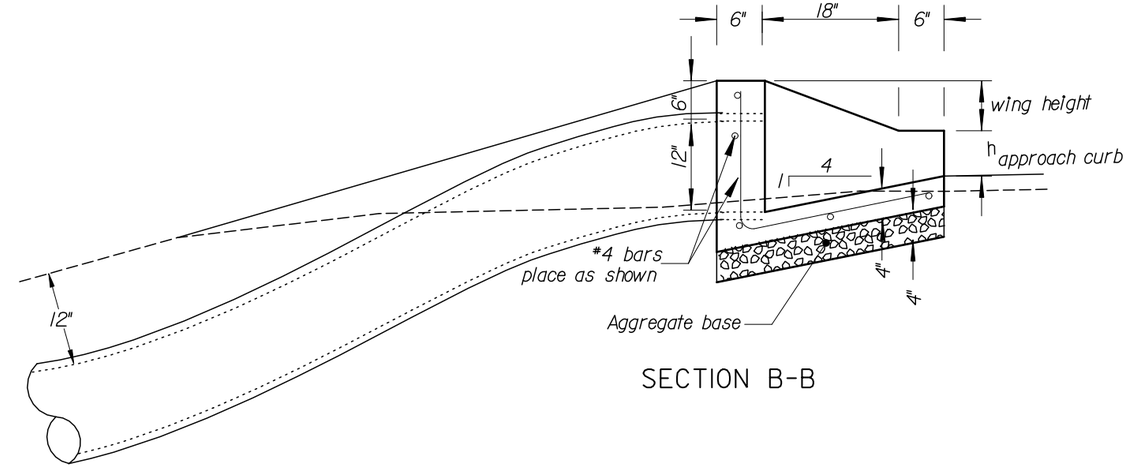

SECTION B-B

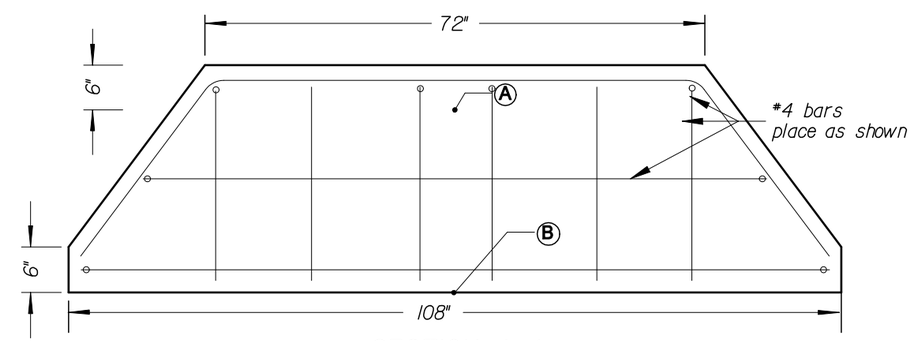

SECTION A-A
BOTTOM POUR

NOTE: POINT Ⓐ IS 6" LOWER THAN POINT Ⓑ .

NO SCALE

U.S. DEPARTMENT OF TRANSPORTATION
FEDERAL HIGHWAY ADMINISTRATION
EASTERN FEDERAL LANDS HIGHWAY DIVISION

DETAIL
FUNNEL DRAIN INLET, TYPE C

STANDARD APPROVED FOR USE --/----

REVISED:

DETAIL
E604-C

5/20/2008 3:17:49 PM T:\HWY\AK\Vicksburg\ParkV\ICK 10(2)-12(2)-19\INS-V\ICK10(2)_std.dgn

NPS NO.	REG	STATE	PROJECT	SHEET NO.
306 / 41,918	SE	MS	PRA - VICK 10(2),12(2),19(1)	S18

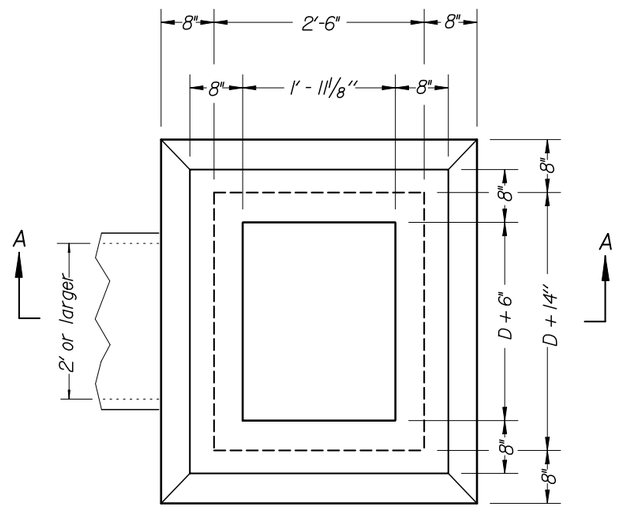

Notes:

1. At the option of the Contractor walls less than 4 feet may be of either concrete block or concrete as shown.
2. Construct Type 6A-6 inlets for pipes 24 inch and larger for "Limited Headroom", unless otherwise directed by the CO.
3. Construct inlets parallel to the roadway centerline and grade. For pipes on skew, adapt inlets as directed by the CO.
4. Construct ladder rungs of 3/4" round or square steel or wrought iron where depth exceeds 4'.
5. For frames and gratings, minor variations in design and dimensions are permitted to allow manufacturers standards. All grates are to be bicycle safe.
6. Orient curved vanes toward direction of stormwater flow. In a sump condition, orientation of curved vanes can be in either direction. Contractor is responsible for correct grate orientation towards stormwater flow.
7. Construct Type 6A-6 metal frame and grating for 6" reveal, unless otherwise directed by the CO.
8. See Detail E604-D SH.2 for metal frame and grate, Type 6A-6 (curved vane grate) details.

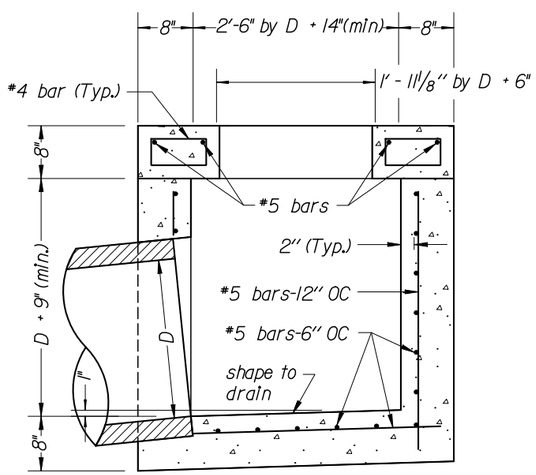

Limited Headroom

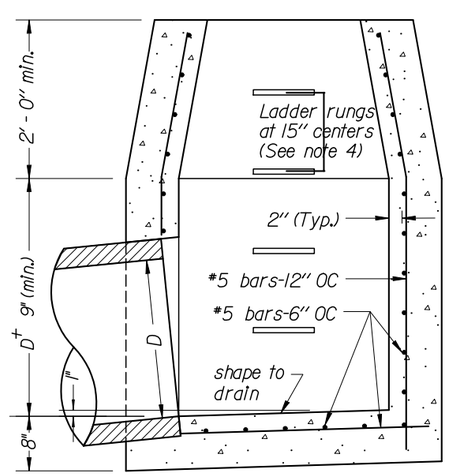

Ample Headroom

SECTION A-A

TYPE 6A-A INLET
(for 2' or larger pipes)

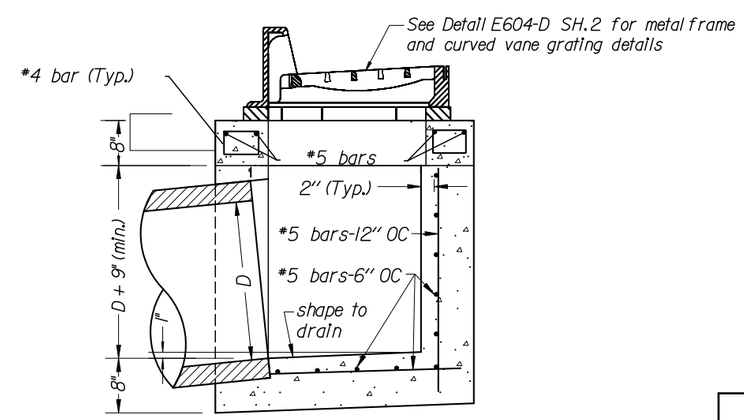

SECTION A-A

TYPE 6A-6 INLET

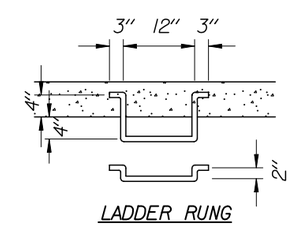

LADDER RUNG

NO SCALE

SHEET 1 OF 2

U.S. DEPARTMENT OF TRANSPORTATION
FEDERAL HIGHWAY ADMINISTRATION
EASTERN FEDERAL LANDS HIGHWAY DIVISION

DETAIL

INLET, TYPE 6A

STANDARD APPROVED FOR USE --/----

REVISED:

DETAIL
E604-D

5/20/2008 3:18:02 PM T:\HWY\AK\Vicksburg\Park\VICK 10(2)-12(2)-19(1)\S-V(CK10(2)_std.dgn

NPS NO.	REG	STATE	PROJECT	SHEET NO.
306 / 41,918	SE	MS	PRA - VICK 10(2),12(2),19(1)	S19

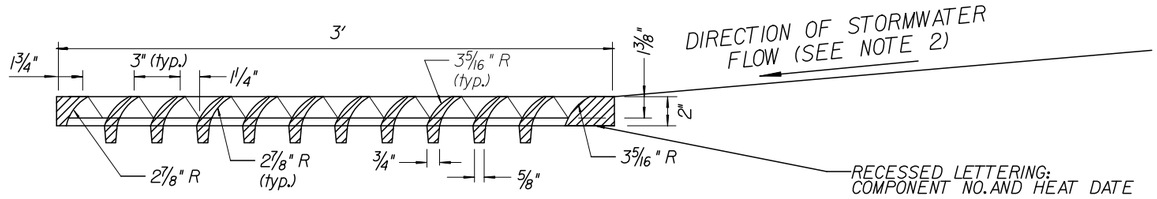

FRONT ELEVATION GRATE TYPE 6A-6 MODIFIED (CURVED VANE GRATINGS)

Notes:

1. For frames and gratings, minor variations in design and dimensions are permitted to allow manufacturers standards. All grates are to be bicycle safe.
2. Orient curved vanes toward direction of stormwater flow. In a sump condition, orientation of curved vanes can be in either direction. Contractor is responsible for correct grate orientation towards stormwater flow.

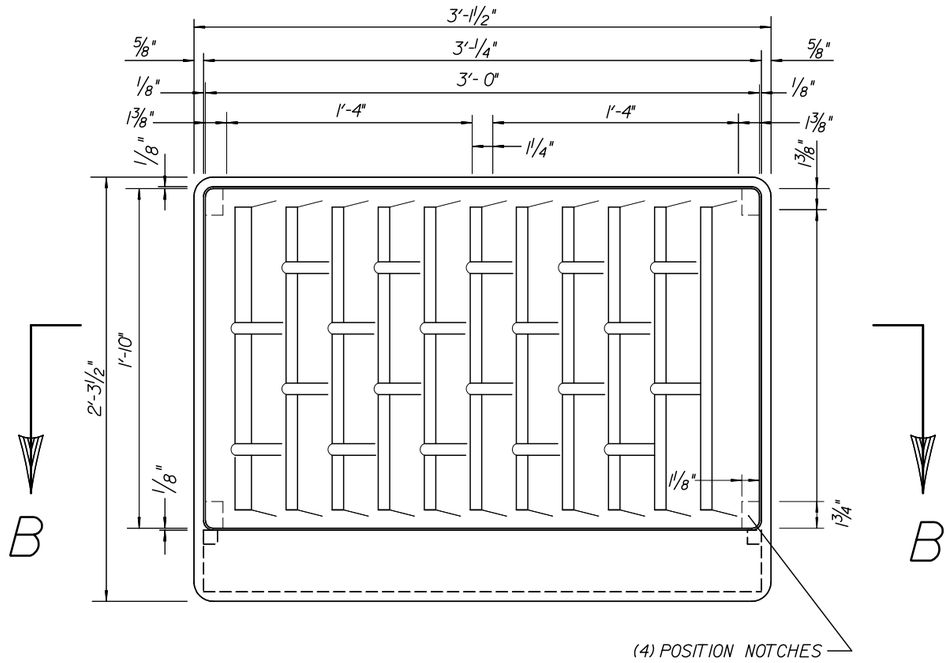

TOP VIEW FRAME AND GRATE TYPE 6A-6 MODIFIED (CURVED VANE GRATINGS)

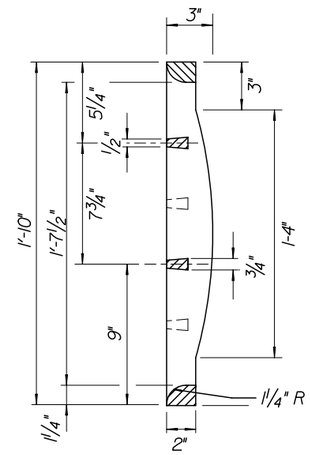

SIDE ELEVATION GRATE TYPE 6A-6 MODIFIED (CURVED VANE GRATINGS)

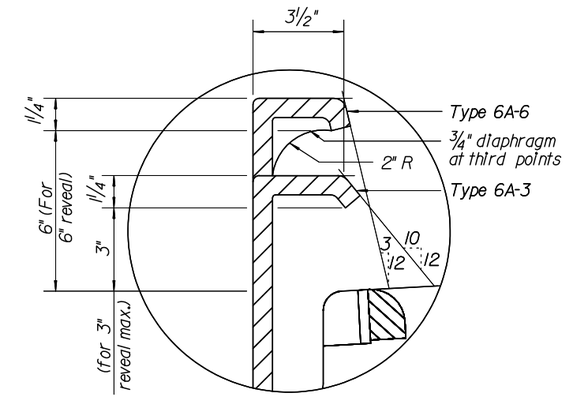

DETAIL A

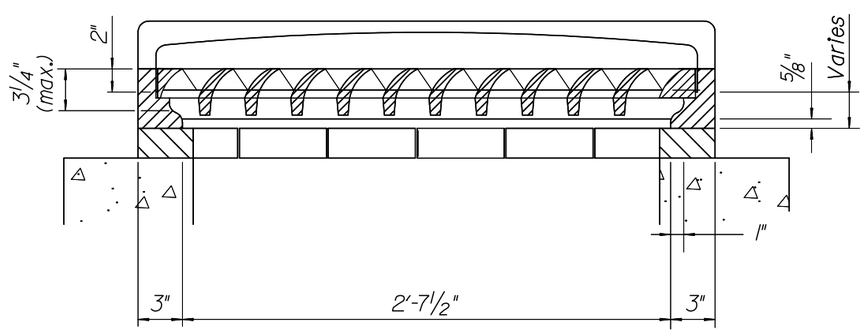

SECTION B-B

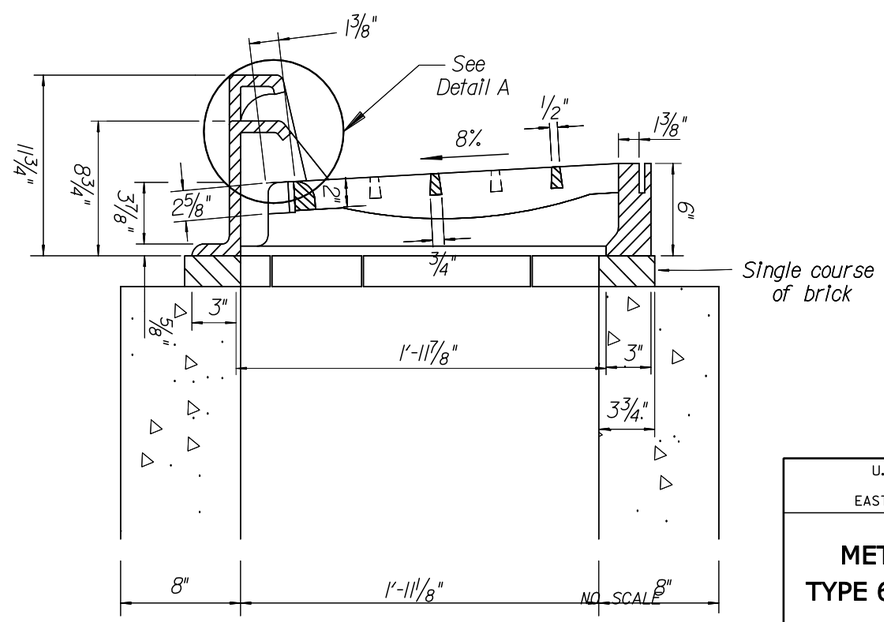

METAL FRAMES AND GRATINGS TYPE 6A-6 MODIFIED

U.S. DEPARTMENT OF TRANSPORTATION
FEDERAL HIGHWAY ADMINISTRATION
EASTERN FEDERAL LANDS HIGHWAY DIVISION

DETAIL

METAL FRAME AND GRATE, TYPE 6A (CURVED VANE GRATE)

SHEET 2 OF 2

STANDARD APPROVED FOR USE --/----

REVISED:

DETAIL E604-D

5/20/2008 3:18:15 PM T:\HWY\AK\Vicksburg\Park\VICK 10(2)-12(2)-19(1)\S-V1CK10(2)_std.dgn

NPS NO.	REG	STATE	PROJECT	SHEET NO.
306 41,918	SE	MS	PRA - VICK 10(2),12(2),19(1)	S20

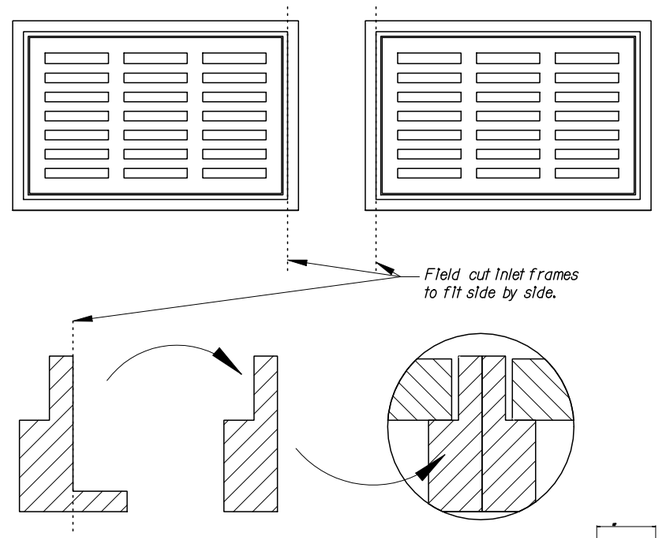

DETAIL A

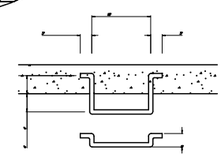

LADDER RUNG

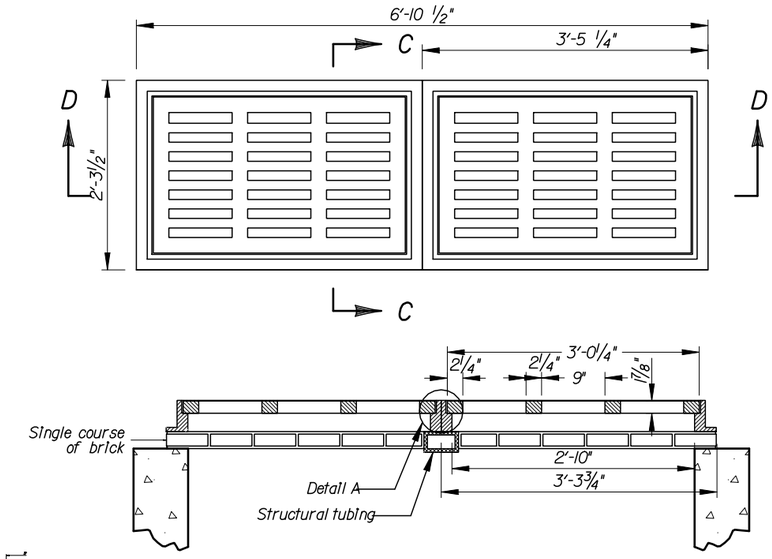

SECTION D-D

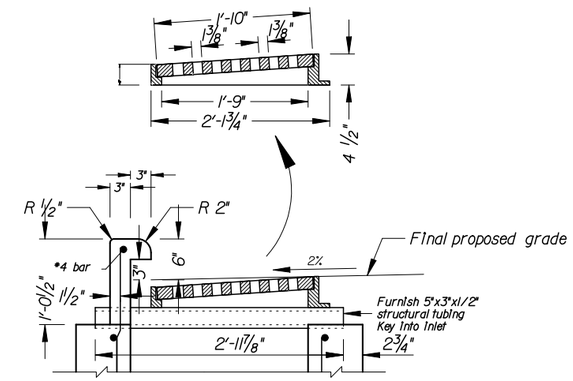

SECTION C-C

METAL FRAMES AND BICYCLE SAFE DOUBLE GRATES, TYPE 6A

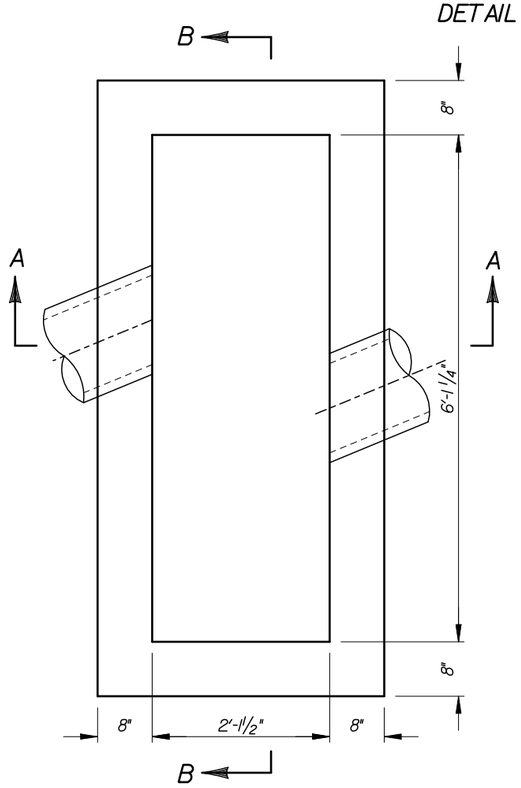

INLET, TYPE 6A

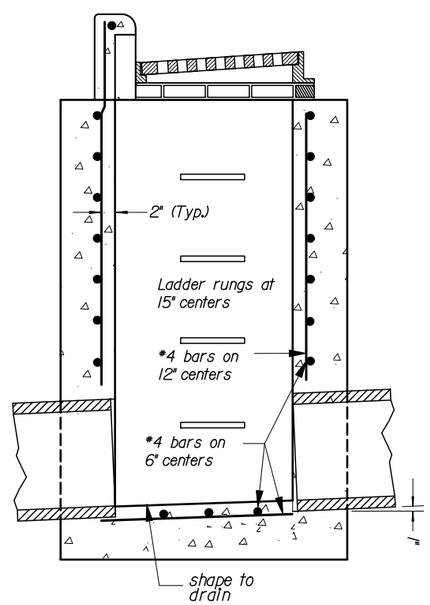

SECTION A-A

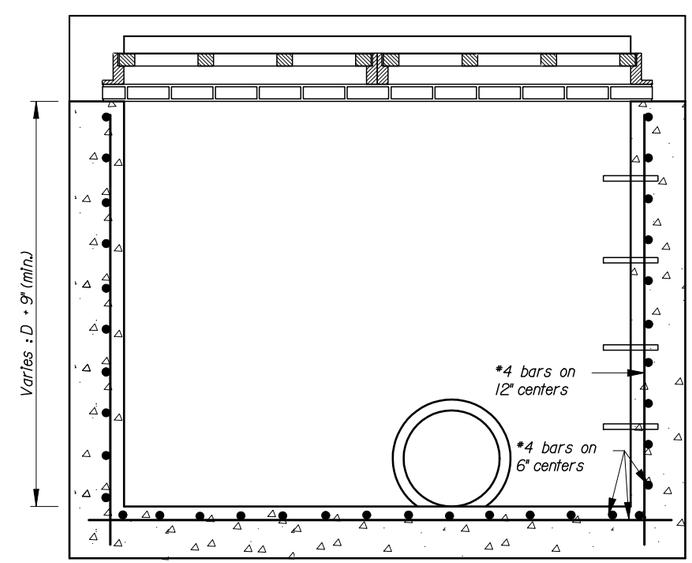

SECTION B-B

NOTE:

1. Construct inlet parallel to the roadway centerline and grade.
2. Construct ladder rungs of #6 round or square steel or wrought iron where depth exceeds 4'-0".
3. For frames and bicycle safe gratings, minor variations in design and dimensions are permitted to allow manufacturers standards as approved by the CO.

NO SCALE

U.S. DEPARTMENT OF TRANSPORTATION
FEDERAL HIGHWAY ADMINISTRATION
EASTERN FEDERAL LANDS HIGHWAY DIVISION

DETAIL

INLET, TYPE 6A MODIFIED W/BICYCLE SAFE DOUBLE GRATE

SHEET 2 OF 2

STANDARD APPROVED FOR USE --/----

REVISED:

DETAIL E604-E

5/20/2008 3:18:30 PM T:\HWY\AKV\IcksMillPark\VICK 10(2)-12(2)-19(1)\S-VICK10(2)_std.dgn

NPS NO.	REG	STATE	PROJECT	SHEET NO.
306 / 41,918	SE	MS	PRA - VICK 10(2),12(2),19(1)	S21

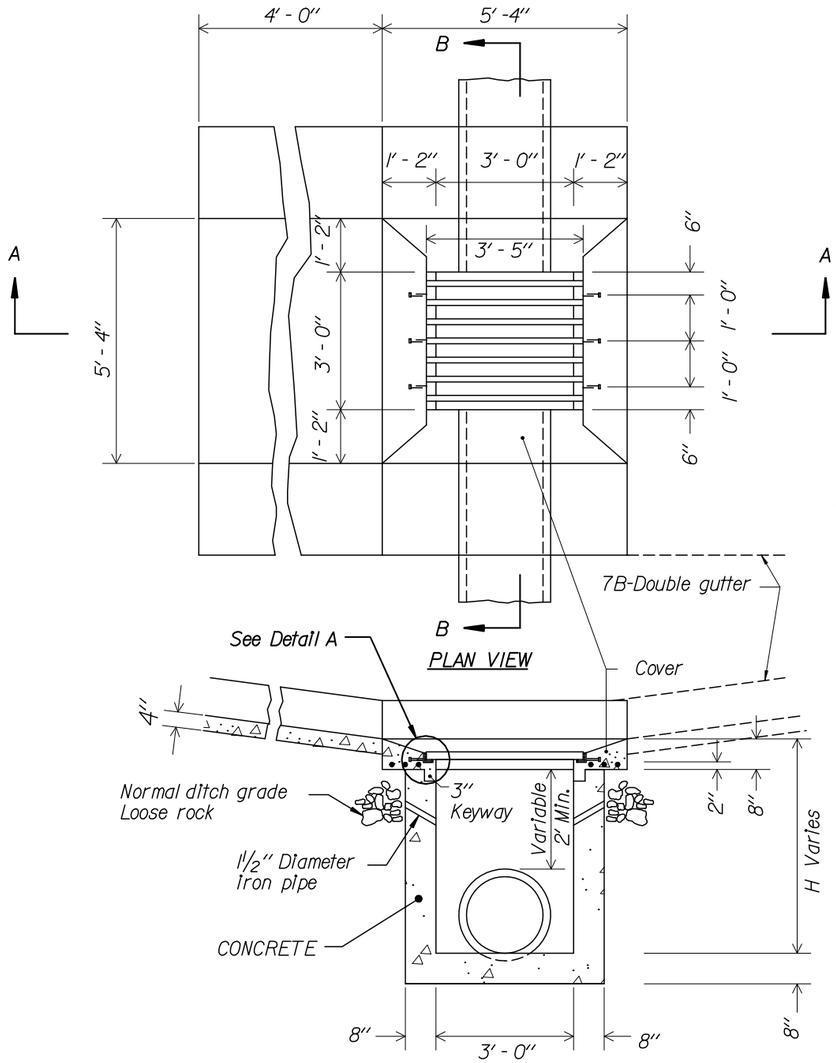

SECTION A-A

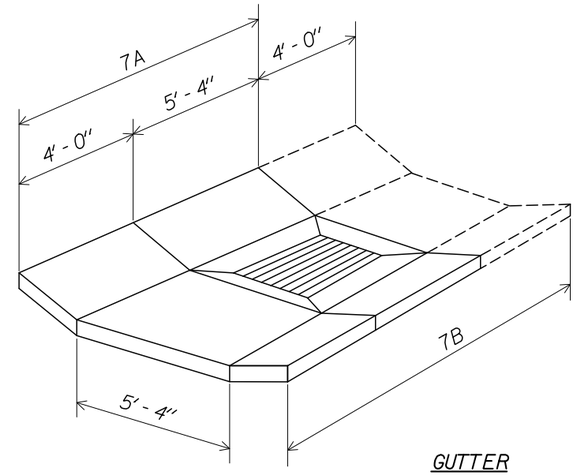

GUTTER

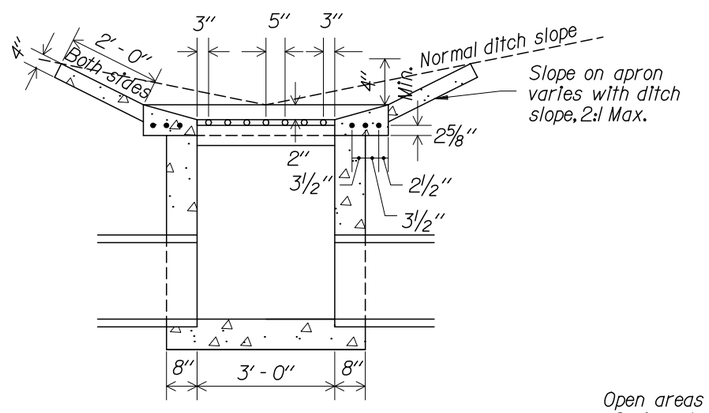

SECTION B-B

Notes:

1. 7A = single gutter when inlet is on a grade.
2. 7B = double gutter when inlet is in a sag between two grades
3. All concrete quantities are calculated without pipe areas deducted.
4. Ditch to be warped to tie smoothly into inlet gutter.
5. Transition all paved ditches to meet inlet gutter.
6. Outside dimensions of grate to be 3' - 4" X 2' - 11 3/4"
7. Maximum depth (H) to be 12' - 8"
8. Fabricate galvanized grate in accordance with AASHTO-M111.
9. Alternate methods of anchoring angle iron will be acceptable if approved by the CO.

APPROXIMATE QUANTITIES

Pipe Size	12"	15"	18"	24"	30"	36"
Min. depth H	2'-0"	2'-3 1/4"	2'-6 1/2"	3'-1"	3'-7 1/2"	4'-2"
C.Y. Conc. Inlet	0.947	1.045	1.143	1.339	1.535	1.731

Increment per foot of additional depth, (H)=0.362 Cu.Yds.

Cu.Yds. Concrete for gutter 7A=0.724, & B=1.84

Cu.Yds. Concrete for Cover=0.423 (Not included above)

Reinforcing Steel For Cover=63 lbs.

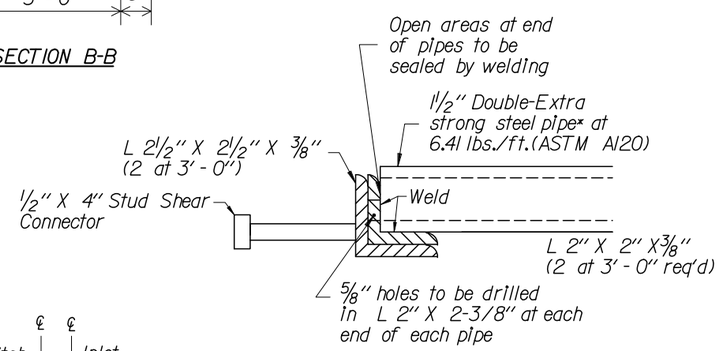

DETAIL A

* 2" Dia. Solid Steel Bar at 10.68 lbs/ft may be substituted.

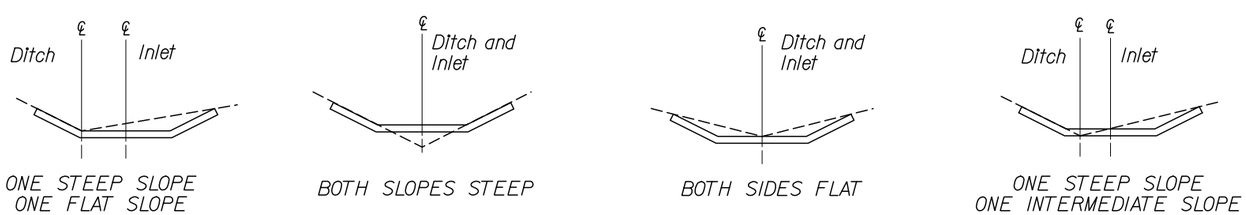

TYPICAL GUTTER PLACEMENT

U.S. DEPARTMENT OF TRANSPORTATION
FEDERAL HIGHWAY ADMINISTRATION
FEDERAL LANDS HIGHWAY

STANDARD

INLET TYPE 7A AND 7B
FOR USE WITH 12" to 36" PIPES

STANDARD APPROVED FOR USE --/----

REVISED:

STANDARD
604-8

5/20/2008 3:18:45 PM T:\HWY\AK\Vicksburg\ParkVICK 10(2)-12(2)-19(1)\S-VICK10(2)_std.dgn

NPS NO.	REG	STATE	PROJECT	SHEET NO.
306 / 41,918	SE	MS	PRA - VICK 10(2),12(2),19(1)	S22

Notes:

1. At the option of the Contractor, walls less than 4 feet may be of concrete or concrete block.

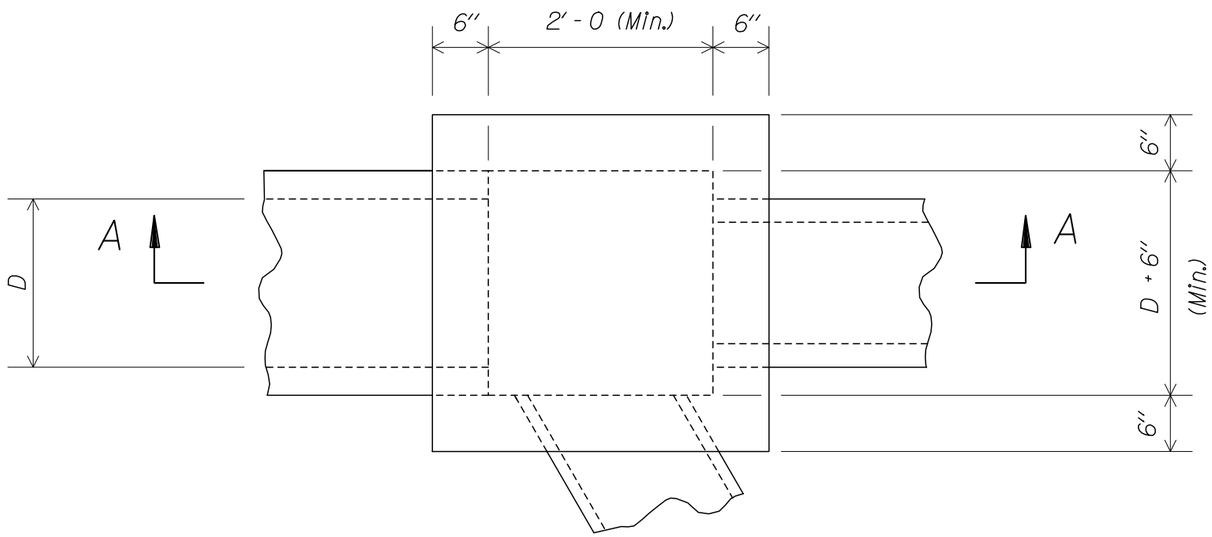

PLAN

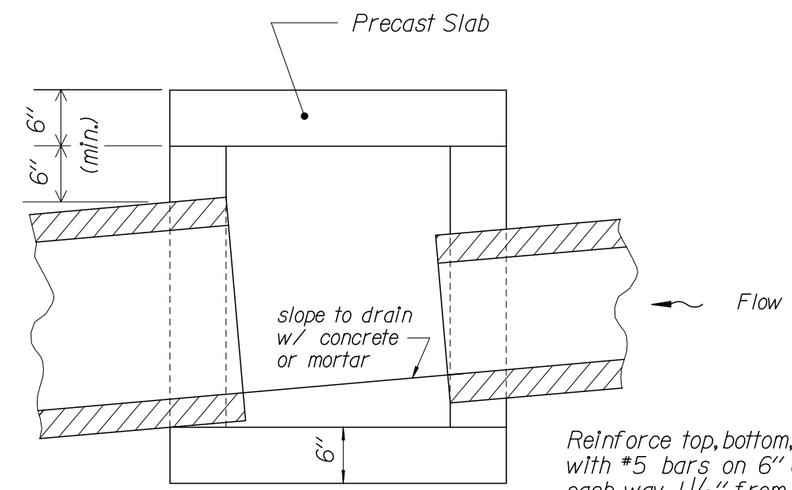

Reinforce top, bottom, and sides with #5 bars on 6" centers each way, $1\frac{1}{2}$" from inside of junction box.

SECTION A-A

U.S. DEPARTMENT OF TRANSPORTATION
FEDERAL HIGHWAY ADMINISTRATION
EASTERN FEDERAL LANDS HIGHWAY DIVISION

DETAIL

JUNCTION BOX

DETAIL APPROVED FOR USE --/----

REVISED:

DETAIL E604-6

5/20/2008 3:19:01 PM T:\HWY\AKV\IcksMII\Part\VICK 10(2)-12(2)-19(1)\S-VICK(012)_std.dgn

NPS NO.	REG	STATE	PROJECT	SHEET NO.
306 / 41,918	SE	MS	PRA-VICK 10(2), 12(2), 19(1)	S23

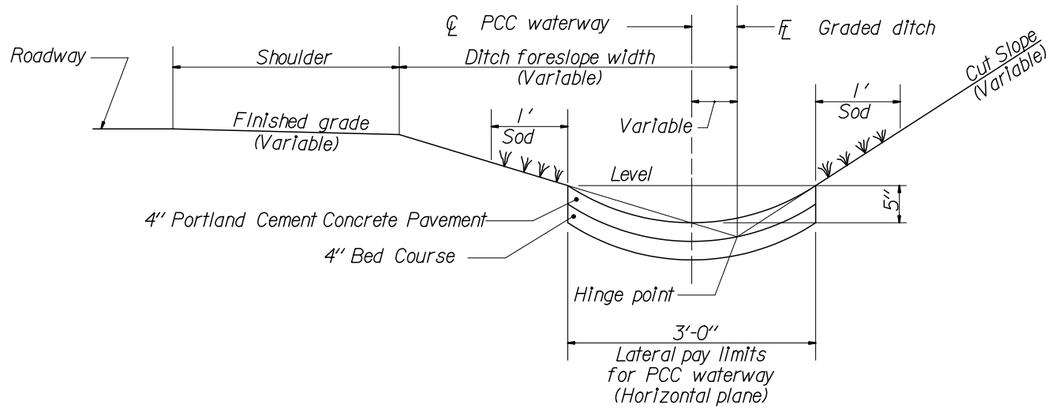

PORTLAND CEMENT CONCRETE WATERWAY

NOTES:

1. The approximate shape of the Portland Cement Concrete waterway is an arc with a radius of 2.9 feet.
2. At inlets and other special locations, widen and shape paved waterway to drain.
3. Construct Portland Cement Concrete waterway in uniform sections 20 feet in length, except closure sections are not less than 5 feet in length. Place expansion joints, with curtain walls at 100 foot intervals.
4. At the outlet end of each Portland Cement Concrete waterway, construct a curtain wall on the downstream end of the last section of waterway.

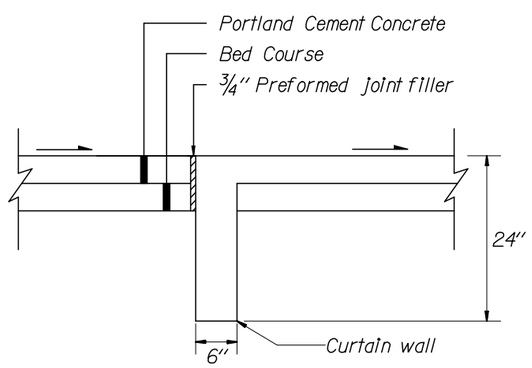

SECTION A-A

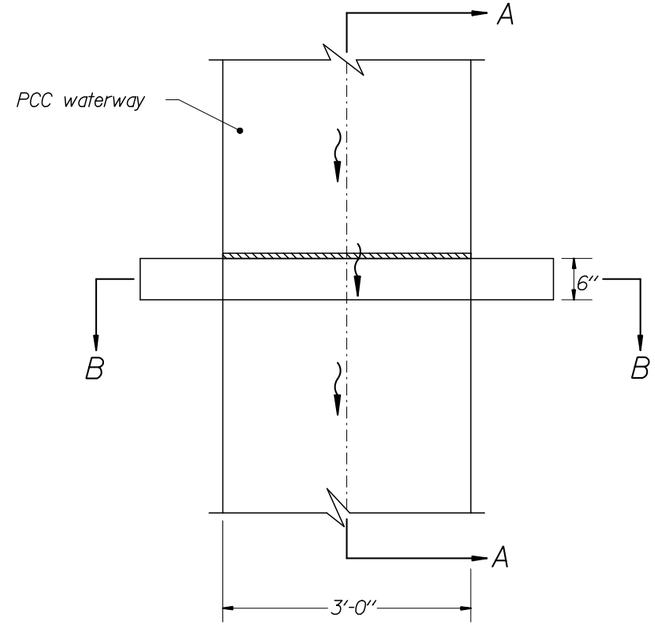

PLAN

EXPANSION JOINT FOR PORTLAND CEMENT CONCRETE WATERWAY

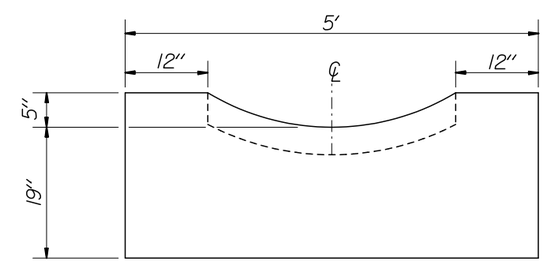

SECTION B-B

NOT TO SCALE

U.S. DEPARTMENT OF TRANSPORTATION
FEDERAL HIGHWAY ADMINISTRATION
EASTERN FEDERAL LANDS HIGHWAY DIVISION

DETAIL

PORTLAND CEMENT CONCRETE WATERWAY
TYPE 4

DETAIL APPROVED FOR USE --/----

REVISED: 4/29/02

DETAIL
E608-1

5/20/2008 3:19:19 PM T:\HWY\AK\VicksMill\Park\VICK 10(2)-12(2)-19(1)\S-VICK10(2)_std.dgn

NPS NO.	REG	STATE	PROJECT	SHEET NO.
306 / 41,918	SE	MS	PRA-VICK 10(2), 12(2), 19(1)	S24

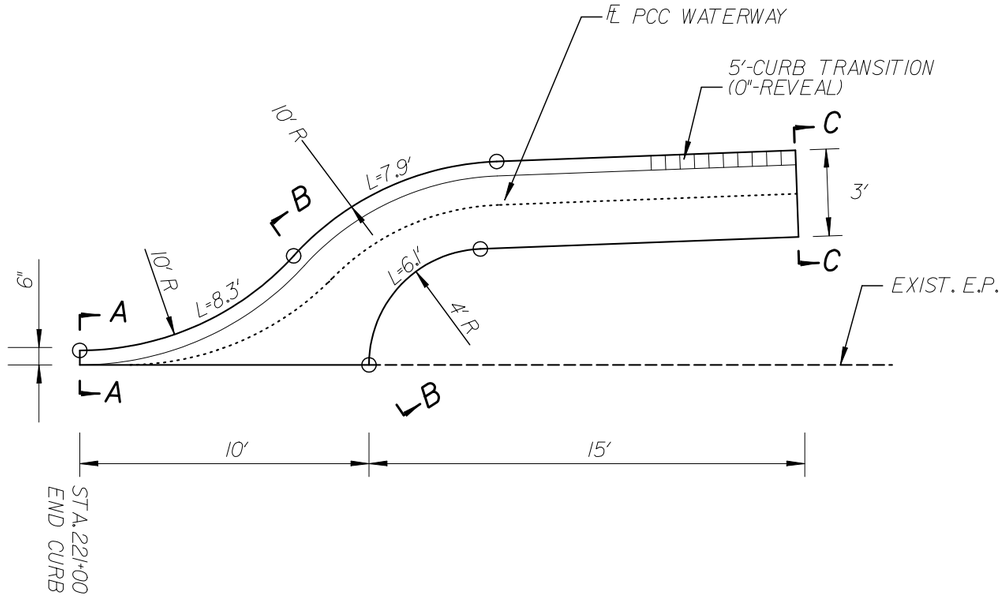

PLAN

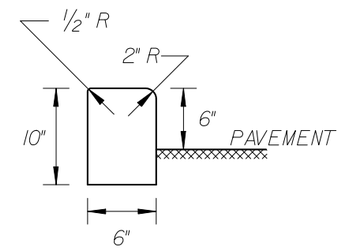

SEC. A-A

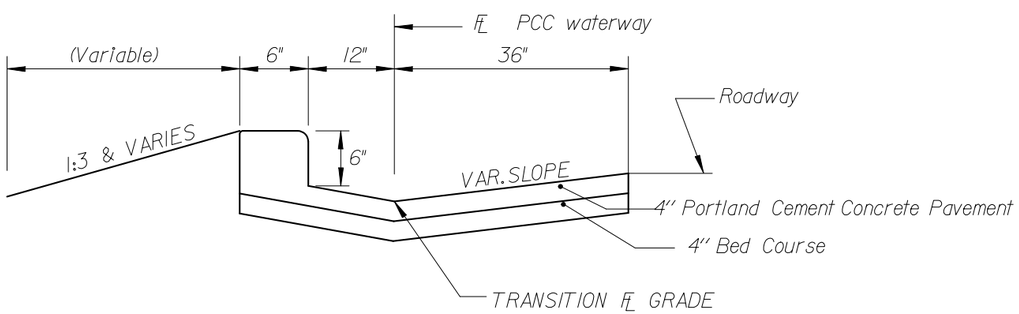

SEC. B-B

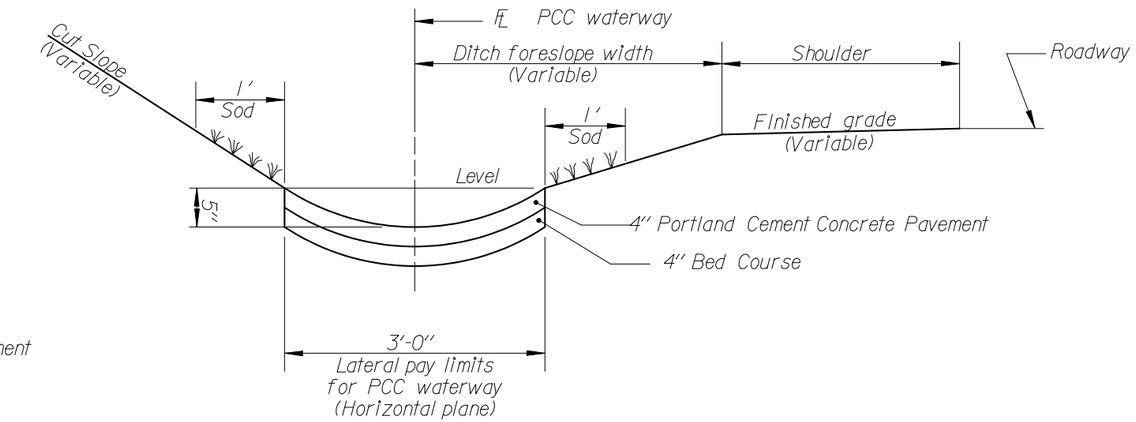

SEC. C-C

NOT TO SCALE

U.S. DEPARTMENT OF TRANSPORTATION
FEDERAL HIGHWAY ADMINISTRATION
EASTERN FEDERAL LANDS HIGHWAY DIVISION

DETAIL

PORTLAND CEMENT CONCRETE WATERWAY PAVED FLUME TRANSITION

DETAIL APPROVED FOR USE --/----

REVISED: 4/29/02

DETAIL E608-A

5/20/2008 3:19:31 PM T:\HWY\AK\Vicksburg\Park\VICK 10(2)-12(2)-19(1)\S-VICK10(2)_std.dgn

NPS NO.	REG	STATE	PROJECT	SHEET NO.
306 / 41,918	SE	MS	PRA-VICK 10(2), 12(2), 19(1)	S25

Notes:

1. PCC curb to conform to Section 609.
2. Level spreader (Drainage chute) to conform to Section 608.

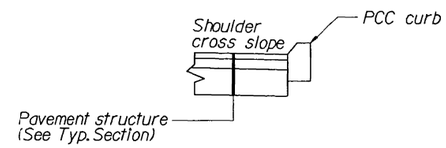

SECTION A-A

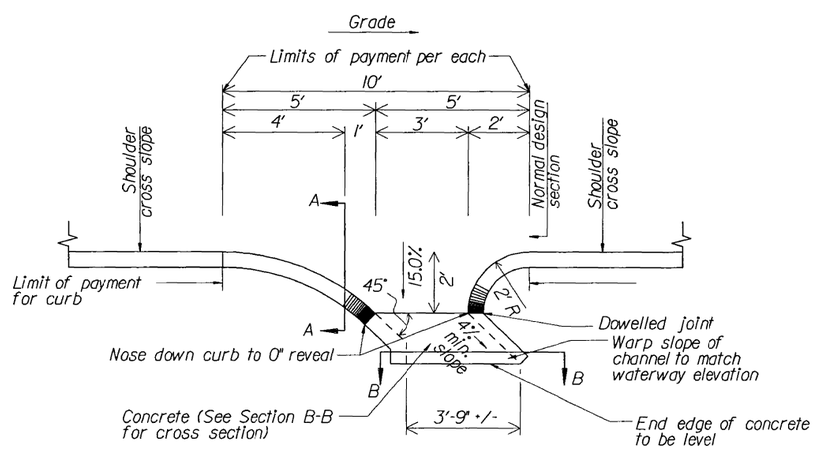

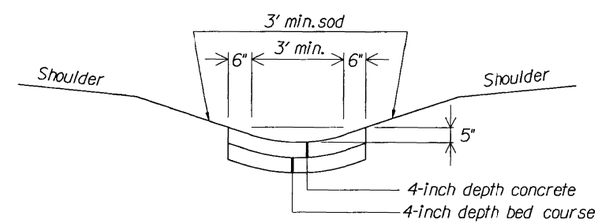

SECTION B-B

U.S. DEPARTMENT OF TRANSPORTATION
FEDERAL HIGHWAY ADMINISTRATION
EASTERN FEDERAL LANDS HIGHWAY DIVISION

DETAIL
CURB CUT OPENING AND LEVEL SPREADER (DRAINAGE CHUTE)

DETAIL APPROVED FOR USE --/----
REVISED:

DETAIL
E608-B

5/20/2008 3:19:58 PM T:\HWY\AK\V\ICKSMILPARK\VICK 10(2)-12(2)-19(1)\S-VICK10(2)_std.dgn

NPS NO.	REG	STATE	PROJECT	SHEET NO.
306 / 41,918	SE	MS	PRA - VICK 10(2),12(2),19(1)	S26

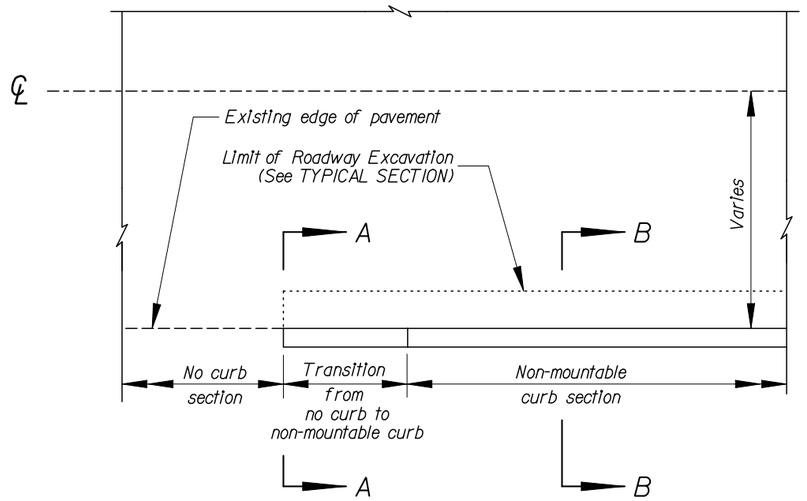

PLAN CURB TRANSITION

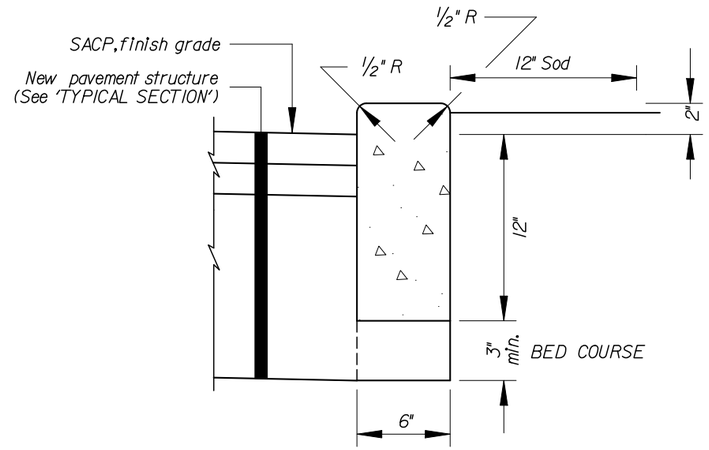

SECTION A-A

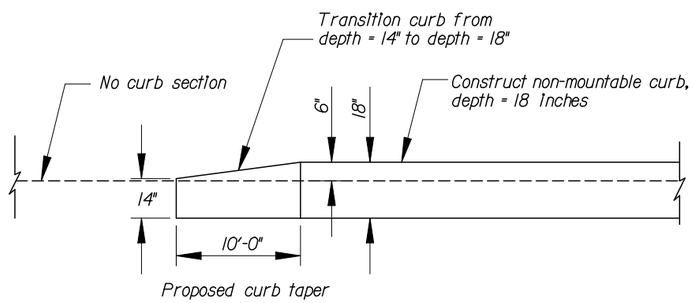

PROFILE CURB TRANSITION

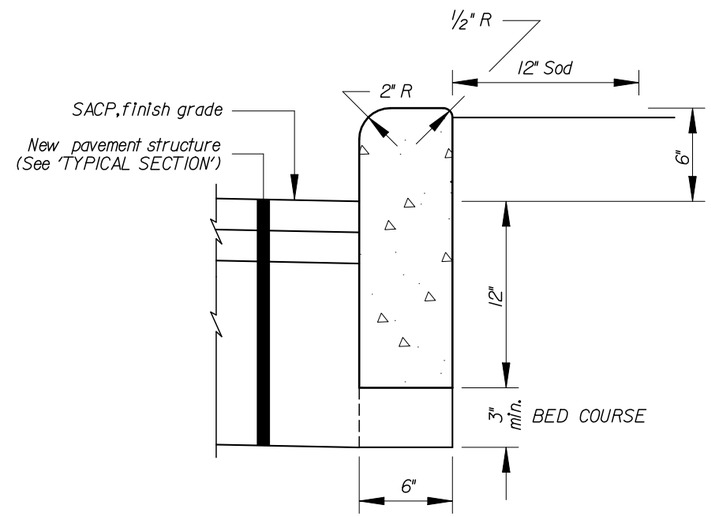

SECTION B-B

PORTLAND CEMENT CONCRETE CURB
18" DEPTH
(NON- MOUNTABLE)

NOTE:

1. Place 3 inches minimum aggregate bed course under all curb.
2. Preformed expansion joint filler shall be placed at intervals not more than 40 feet.

CURB ALTERNATES

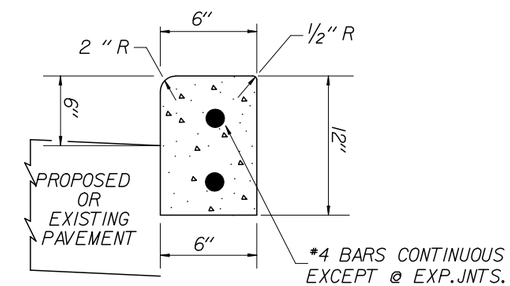

(SLIPFORM METHOD)
ALTERNATE A

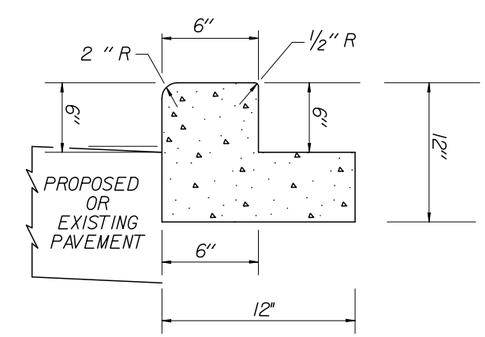

(SLIPFORM METHOD)
ALTERNATE B

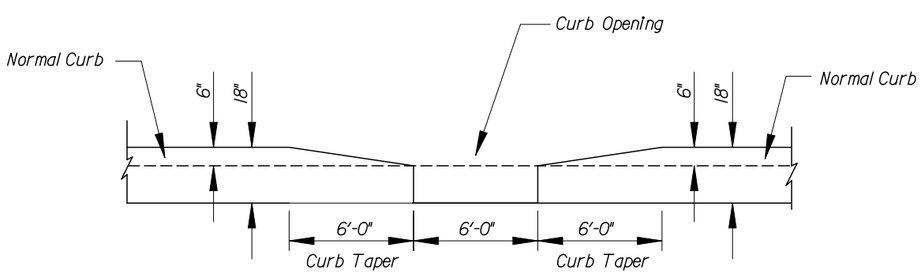

PROFILE CURB CUT

NO SCALE

U.S. DEPARTMENT OF TRANSPORTATION
FEDERAL HIGHWAY ADMINISTRATION
EASTERN FEDERAL LANDS HIGHWAY DIVISION

DETAIL

CURBS, CURB TRANSITIONS & CURB CUTS

DETAIL APPROVED FOR USE --/----

REVISED:

DETAIL
E609-A

5/20/2008 3:20:18 PM T:\HWY\AK\Vicksburg\ParkVICK (10(2)-12(2)-19(1))S-V(CK(10(2)_std.dgn

NPS NO.	REG	STATE	PROJECT	SHEET NO.
306 / 41,918	SE	MS	PRA - VICK 10(2),12(2),19(1)	S27

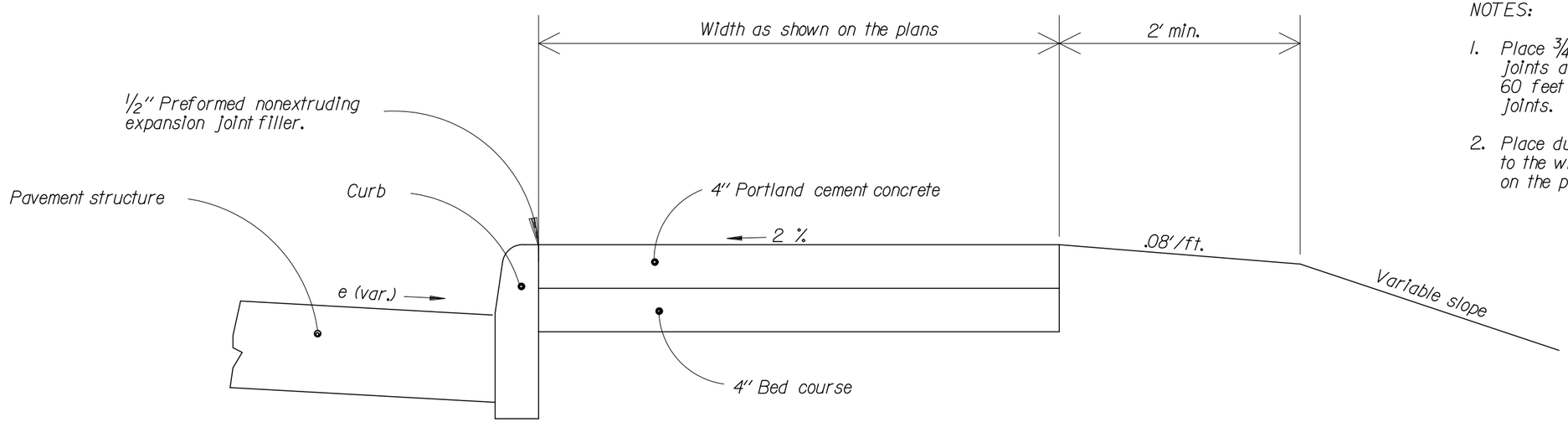

SIDEWALK WITH CURB

NOTES:

1. Place 3/4-inch transverse expansion joints at intervals of not more than 60 feet to match adjacent curb expansion joints.
2. Place dummy joints at intervals equal to the width of the sidewalk as shown on the plans.

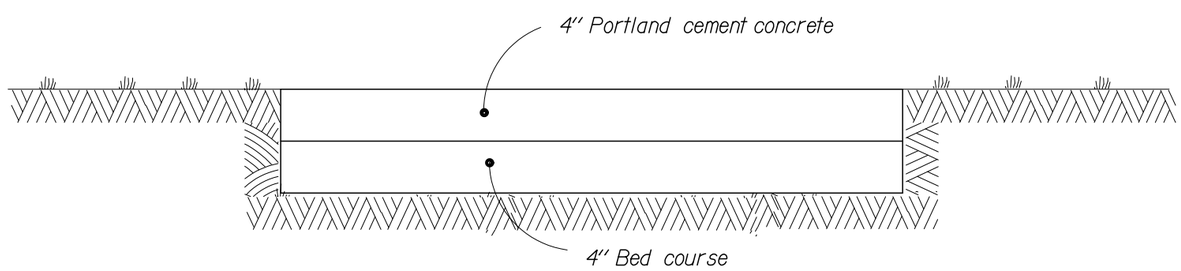

SIDEWALK

NO SCALE

U.S. DEPARTMENT OF TRANSPORTATION
FEDERAL HIGHWAY ADMINISTRATION
EASTERN FEDERAL LANDS HIGHWAY DIVISION

DETAIL

PORTLAND CEMENT CONCRETE SIDEWALK

DETAIL APPROVED FOR USE --/----

REVISED:

DETAIL E615-A

5/20/2008 3:20:32 PM T:\HWY\AKV\IcksMill\Park\VICK 10(2)-12(2)-19(1)\S-VICK10(2)_std.dgn

NPS NO.	REG	STATE	PROJECT	SHEET NO.
306 / 41,918	SE	MS	PRA - VICK 10(2),12(2),19(1)	S28

NOTE:

1. Install recycled shredded rubber surface material as directed by the manufacturer

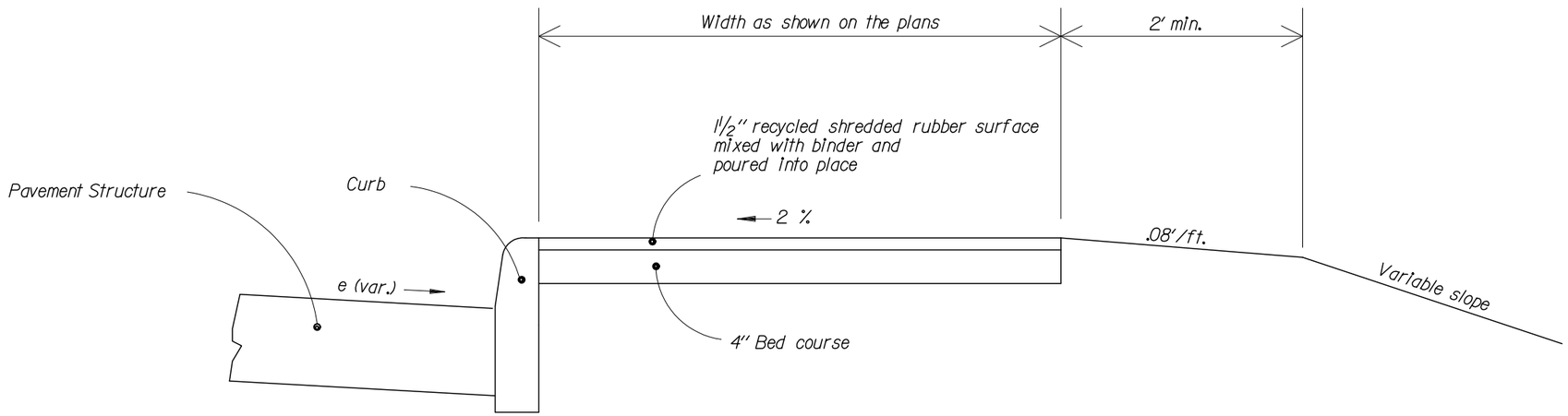

SIDEWALK WITH CURB

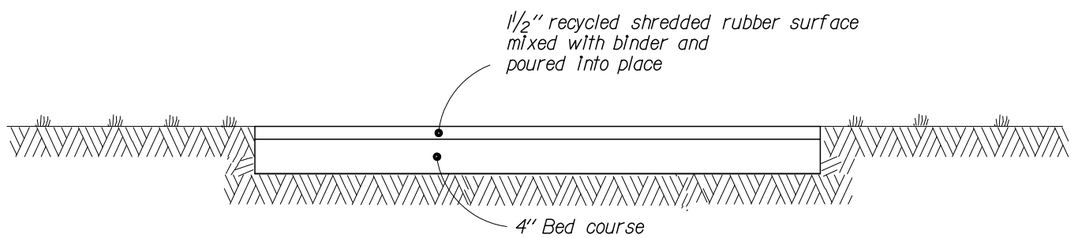

SIDEWALK

NO SCALE

U.S. DEPARTMENT OF TRANSPORTATION
FEDERAL HIGHWAY ADMINISTRATION
EASTERN FEDERAL LANDS HIGHWAY DIVISION

DETAIL

AGGREGATE SIDEWALK

DETAIL APPROVED FOR USE --/----

REVISED:

DETAIL E615-A

5/20/2008 3:20:44 PM T:\HWY\AK\Vicksburg\Park\VICK 10(2)-12(2)-19(1)\S-V\CK10(2)_std.dgn

NPS NO.	REG	STATE	PROJECT	SHEET NO.
306 / 41,918	SE	MS	PRA - VICK 10(2),12(2),19(1)	S29

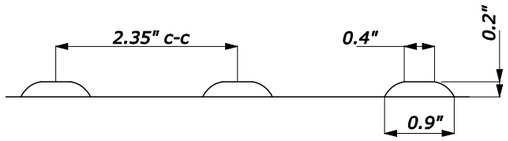

SECTION
TRUNCATED DOME

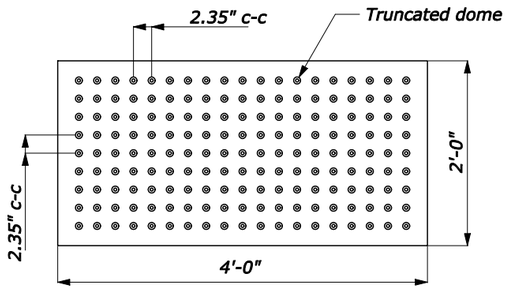

PLAN

DETECTABLE WARNING FIELD WITH TRUNCATED DOMES

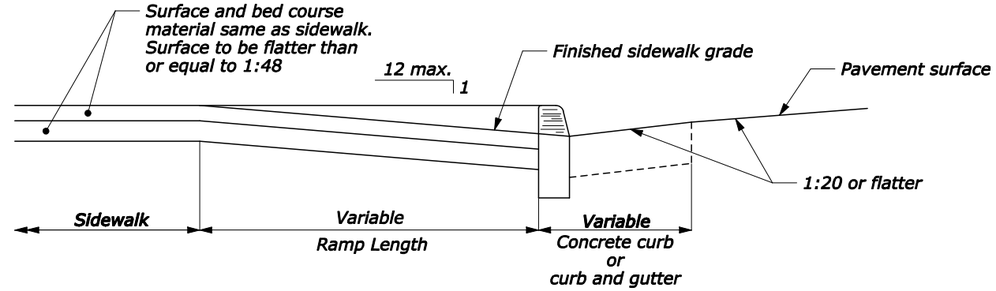

RAMP - TYPICAL SECTION

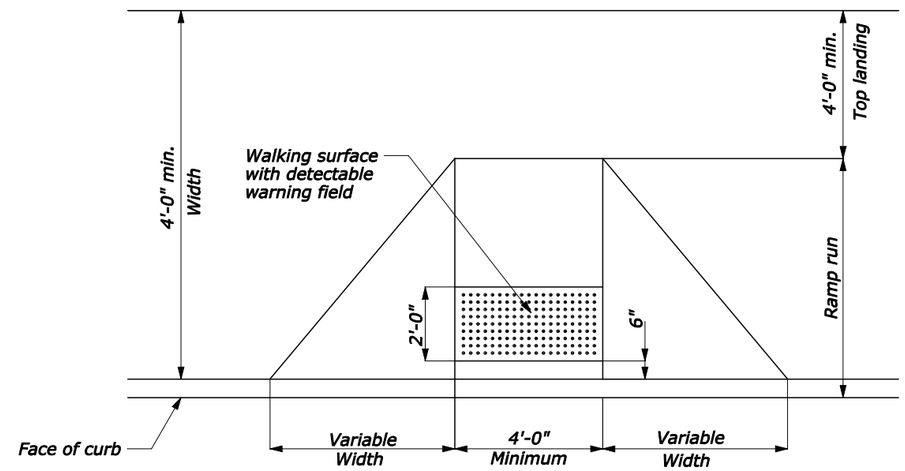

PERPENDICULAR CURB RAMP

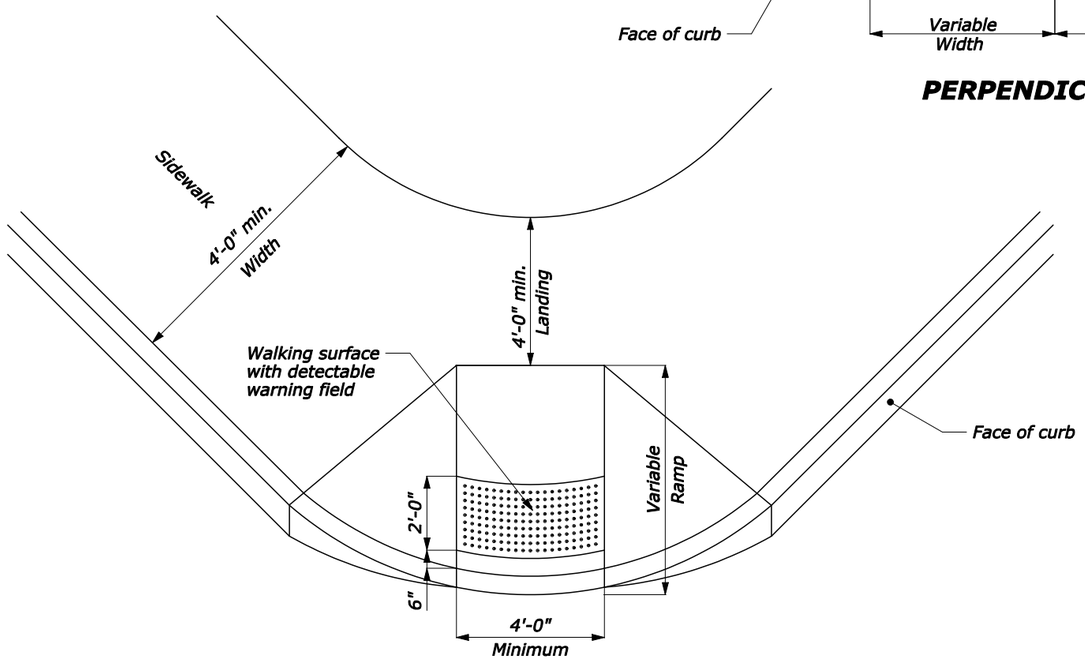

DIAGONAL CURB RAMP

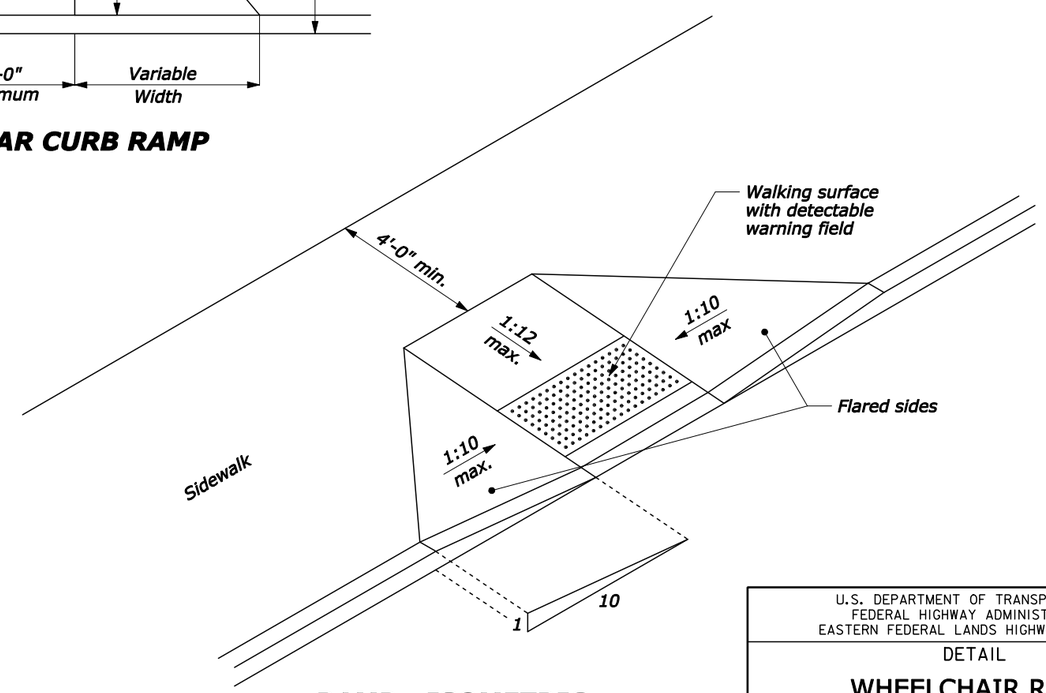

RAMP - ISOMETRIC

NO SCALE

NOTE:

1. The maximum cross slopes of ramps must not exceed 2% in any direction.
2. Use a coarse broom finish running perpendicular to the slope to create a slip resistant surface on concrete ramp surfaces, exclusive of the detectable warning fields.
3. Construct curb ramp perpendicular to the curb. Avoid skewing the ramp face.
4. Construct ramp transitions between walks, gutters, or streets that are flush and free of abrupt vertical changes not to exceed 2.5 inches.
5. Locate drainage inlets and manholes outside of ramp walking surfaces or landings.

U.S. DEPARTMENT OF TRANSPORTATION
FEDERAL HIGHWAY ADMINISTRATION
EASTERN FEDERAL LANDS HIGHWAY DIVISION

DETAIL

WHEELCHAIR RAMP CURB CUT

DETAIL APPROVED FOR USE --/----

REVISED:

DETAIL
E615-B

5/20/2008 3:20:57 PM T:\HWY\AK\Vicksburg\Park\VICK 10(2)-12(2)-19(1)\S-V(CK10(2)_std.dgn

NPS NO.	REG	STATE	PROJECT	SHEET NO.
306 / 41,918	SE	MS	PRA - VICK 10(2),12(2),19(1)	S30

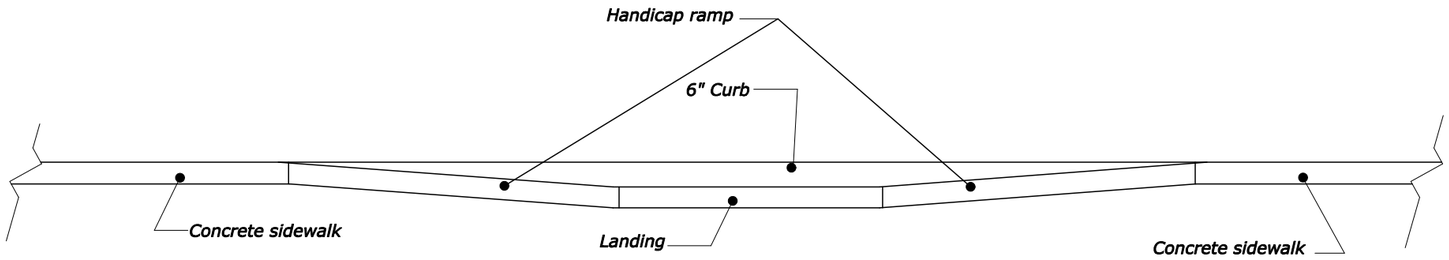

ELEVATION

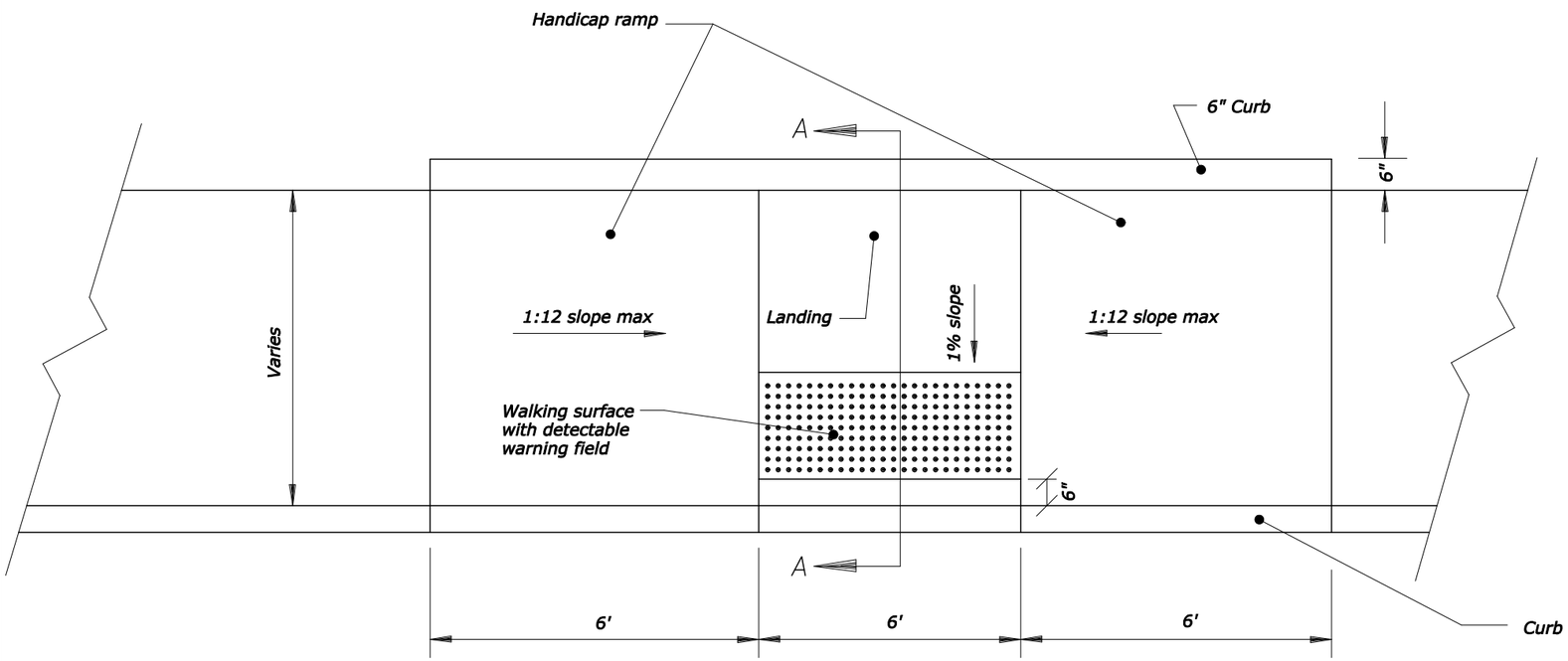

PLAN

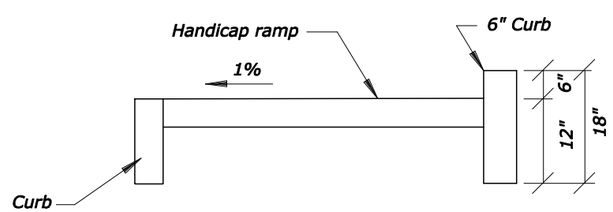

SECTION A-A

NOTE:

1. The maximum cross slopes of ramps must not exceed 2% in any direction.
2. Use a coarse broom finish running perpendicular to the slope to create a slip resistant surface on concrete ramp surfaces, exclusive of the detectable warning fields.
3. Construct curb ramp perpendicular to the curb. Avoid skewing the ramp face.
4. Construct ramp transitions between walks, gutters, or streets that are flush and free of abrupt vertical changes not to exceed 2.5 inches.
5. Locate drainage inlets and manholes outside of ramp walking surfaces or landings.

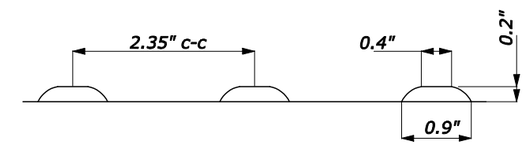

SECTION
TRUNCATED DOME

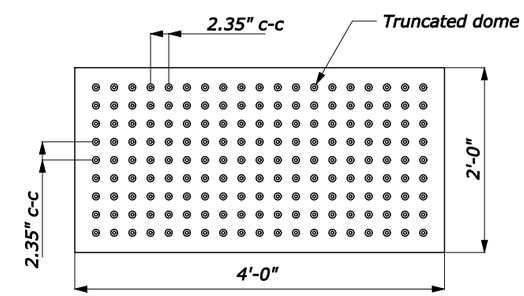

PLAN

DETECTABLE WARNING FIELD WITH TRUNCATED DOMES

NO SCALE

U.S. DEPARTMENT OF TRANSPORTATION
FEDERAL HIGHWAY ADMINISTRATION
EASTERN FEDERAL LANDS HIGHWAY DIVISION

DETAIL
PARALLEL WHEELCHAIR RAMP CURB CUT

DETAIL APPROVED FOR USE --/----
REVISED:

DETAIL
E615-C

5/20/2008 3:21:12 PM T:\FWY\AK\VicksMillPark\VICK 10(2)-12(2)-19(1)\S-VICK10(2)_std.dgn

NPS NO.	REG	STATE	PROJECT	SHEET NO.
306 / 41,918	SE	MS	PRA - VICK 10(2),12(2),19(1)	S31

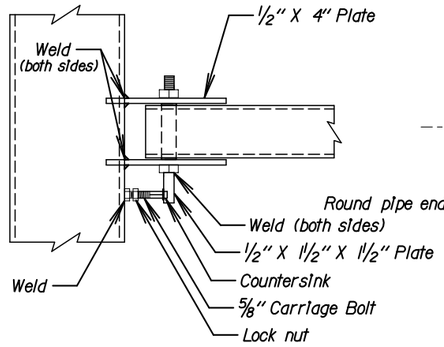

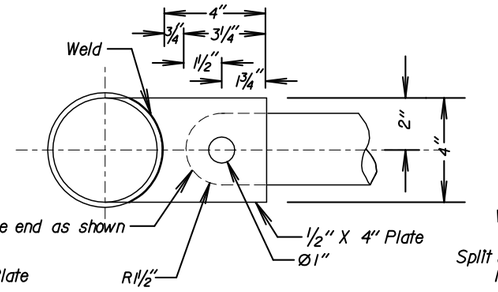

SECTION A-A
(TOP HANGER)

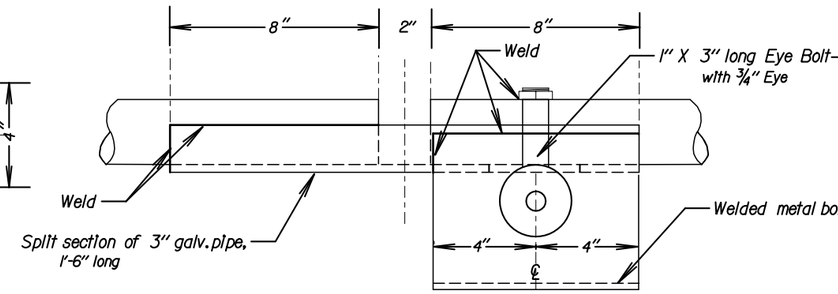

VIEW B-B

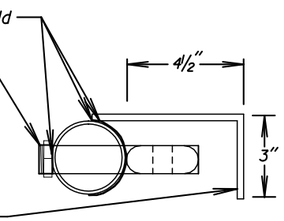

SECTION C-C

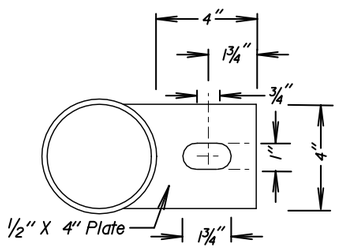

DETAIL "D"
(BOTTOM HANGER)

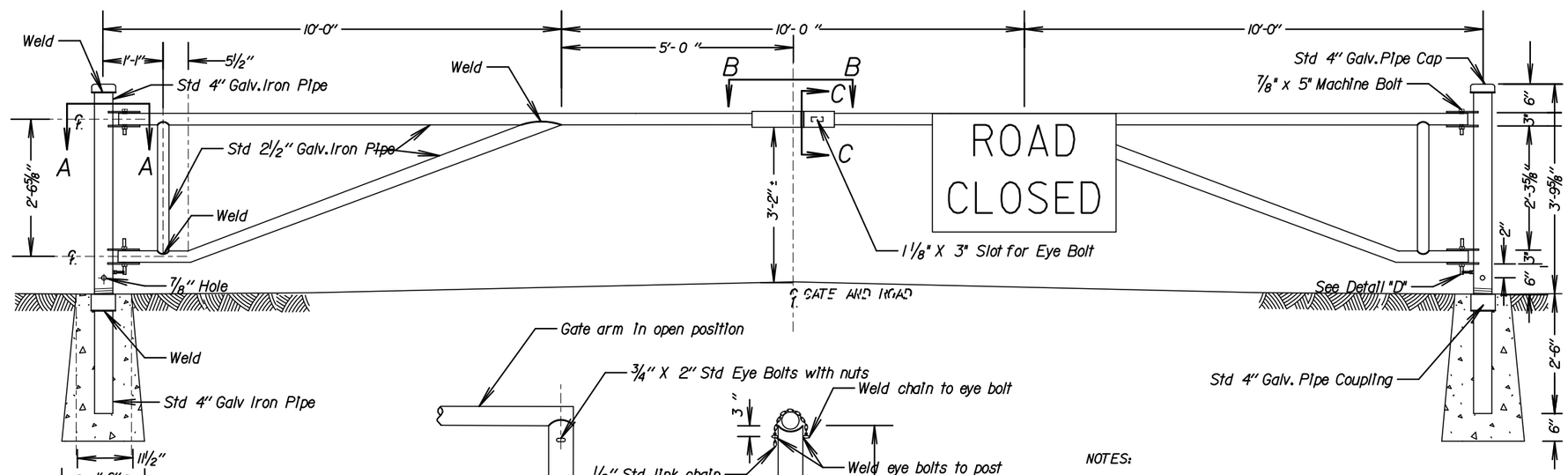

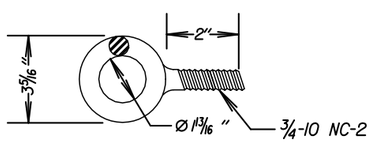

STD.EYE BOLT DETAIL

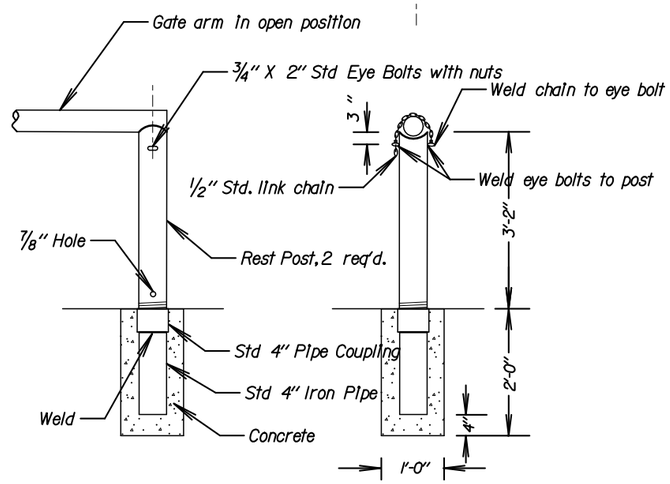

REST POST DETAIL

NOTES:

1. Close top end of Rest Posts with 4 1/2" dia. X 1/8" thick steel plate, form to fit and weld in place.
2. Gates and posts to be painted, alternating black and reflectorized white 4-inch stripes at 45°, as directed by CO.
3. Use galvanized metal parts.
4. Mount one "Road Closed" sign on gate as shown. Center the sign over the lane carrying the incoming traffic.

NO SCALE

U.S. DEPARTMENT OF TRANSPORTATION
FEDERAL HIGHWAY ADMINISTRATION
EASTERN FEDERAL LANDS HIGHWAY DIVISION

DETAIL

METAL GATE
30 FEET

DETAIL APPROVED FOR USE --/----

REVISED:

DETAIL
E619-5

5/20/2008 3:21:25 PM T:\HWY\AK\Vicksburg\Park\VICK 10(2)\12(2)\19(1)\S-VICK(02)_std.dgn

NPS NO.	REG	STATE	PROJECT	SHEET NO.
306 / 41,918	SE	MS	PRA - VICK 10(2),12(2),19(1)	S32

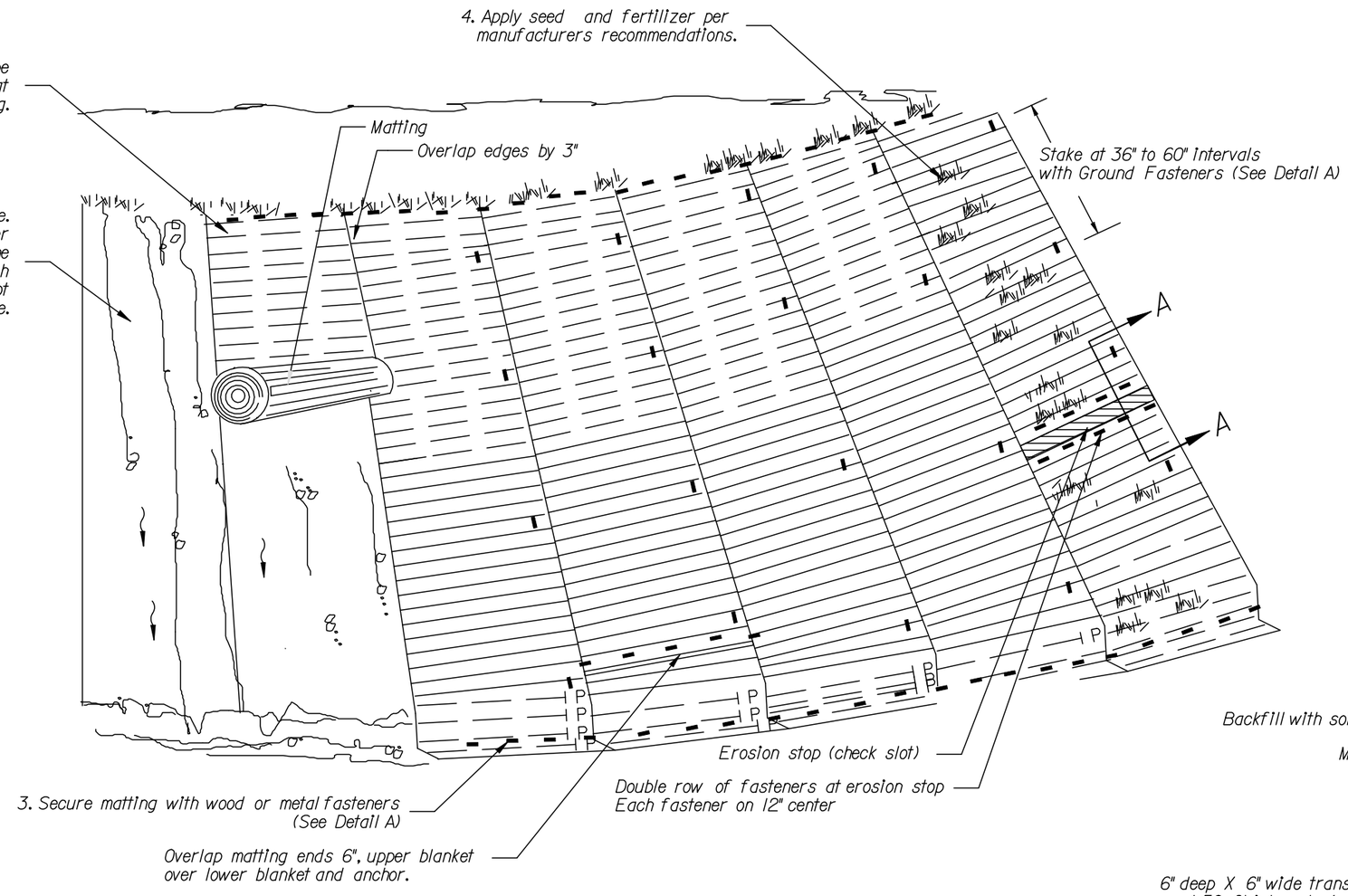

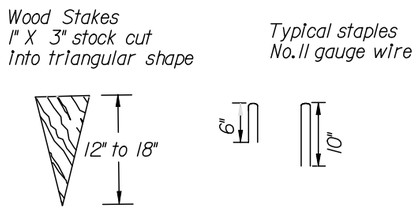

DETAIL A
Typical Ground Fasteners

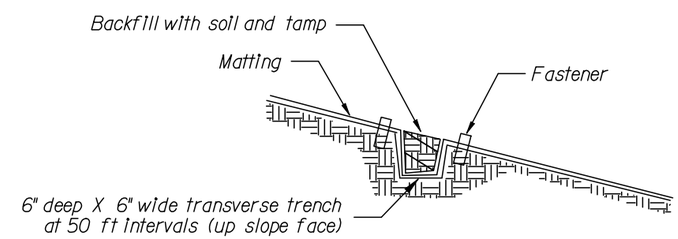

SECTION A-A
Erosion Stop (Check Slot) Detail

DETAIL FOR STABILIZING SLOPES WITH MATTING

NO SCALE

U.S. DEPARTMENT OF TRANSPORTATION
FEDERAL HIGHWAY ADMINISTRATION
EASTERN FEDERAL LANDS HIGHWAY DIVISION

DETAIL

SLOPE STABILIZATION WITH MATTING

DETAIL APPROVED FOR USE --/----

REVISED:

DETAIL E629-1

5/20/2008 3:21:37 PM T:\HWY\AK\VicksMillPark\VICK 10(2)-12(2)-19(1)\S-VICK10(2)_std.dgn

NPS NO.	REG	STATE	PROJECT	SHEET NO.
306 / 41,918	SE	MS	PRA - VICK 10(2),12(2),19(1)	S33

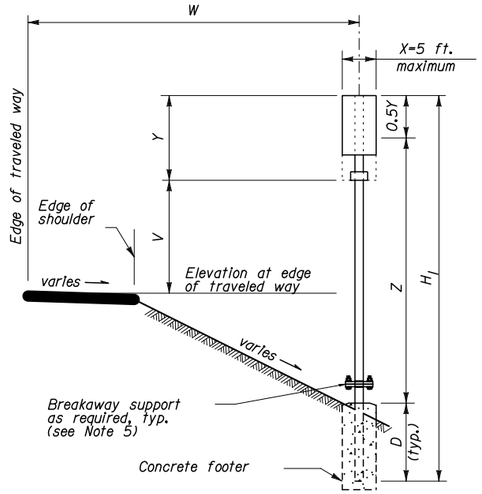

SINGLE POST SIGNS

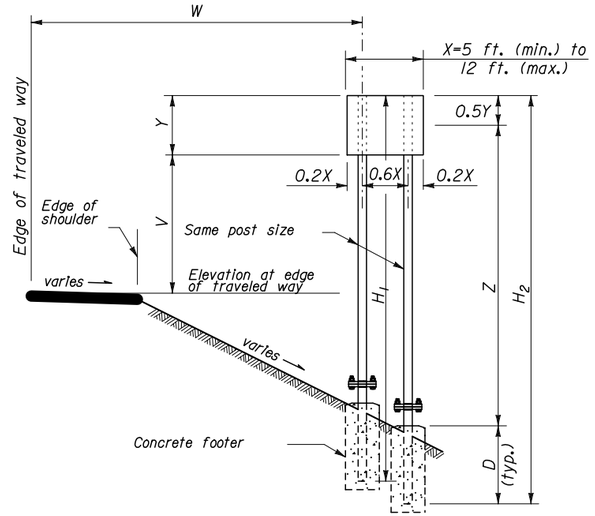

TWO POST SIGNS

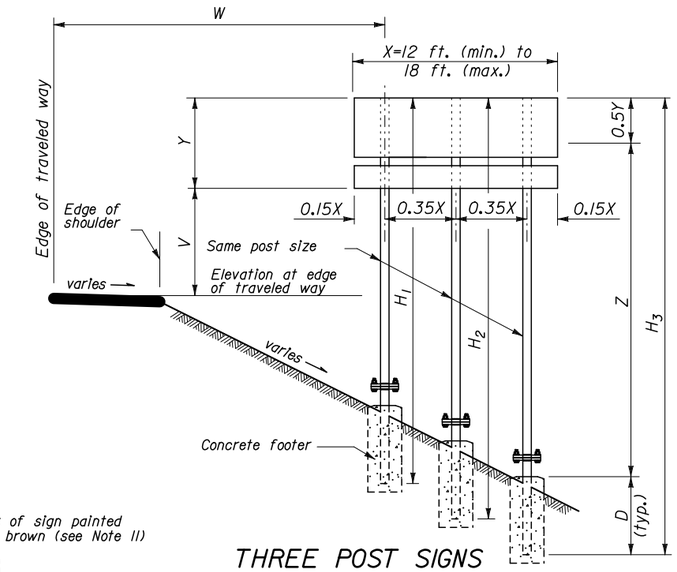

THREE POST SIGNS

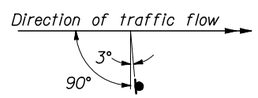

For all retroreflectorized signs where W is more than 30 inches.

SIGN INSTALLATION ANGLE

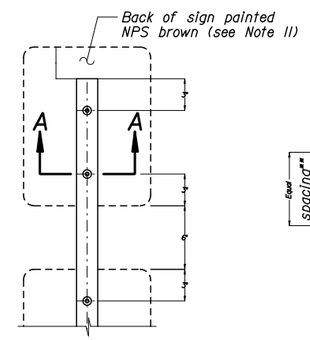

MULTIPLE SIGN ASSEMBLY
(SINGLE POST, TYP.)

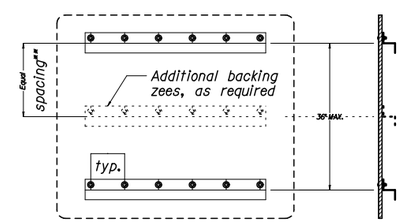

SIGN ASSEMBLY
(WITH BACKING ZEES)

** Maximum spacing between backing zees is 36-inches

NOTES:

1. Install signs in relation to the road: W= 6 to 12 feet; V= 5 feet rural, 7 feet urban.
2. H_1 thru H_4 = Overall post length. Select post lengths to fit field conditions.
3. D= Minimum post embedded depth for average soil conditions. See steel post selection table below.
4. Z= the height from ground line to mid-height of sign at the longest post.
5. Signs erected within the clear zone require breakaway supports as illustrated in Detail E633-2.
6. Table values shown for the product of XYZ are the maximum permitted, except for D.
7. The long side of post runs parallel to flow of traffic, short side of post is perpendicular to flow traffic.
8. For the purpose of post selection- X and Y are as follows: Single sign, or back to back signs- X and Y are the overall dimensions of the signs. Multiple sign installations- X and Y are the dimensions of a rectangle enclosing all the signs.
9. Metal tubing (weathering steel). Hot rolled, flashing, welded mechanical steel tubing meeting ASTMA 500. Do not paint weathering steel posts.
10. Backing zees are required for signs having a minimum size of 42" wide by 36" high.
11. For all permanent signs, paint the back of signs and other specified hardware with two coats of Benjamin Moore, Moorgard, exterior latex low luster paint, Federal Standard 595B Color No. 20059 (NPS Brown).
12. Provide aluminum sign panel with retroreflective sheeting.

STEEL POST SELECTION TABLE

POST SIZE		NUMBER OF POSTS			CONCRETE FOOTING		
		1	2	3			
Nominal Size	Gauge	Product of X-Y-Z (ft3)			D	Dia.	Depth
2" x 2"	13	69	139	208	30"	12"	36"
4" x 2.5"	11	262	524	786	30"	15"	36"
6" x 4"	6	1027	2054	3081	30"	15"	36"

ANCHOR/CARRIAGE BOLT SIZING TABLE

STEEL POST	BOLT SIZE	NUT SIZE*	WASHER SIZE
2" x 2"	3/8" x 3 1/2"	3/8"	1" O.D., ** I.D.
4" x 2.5"	3/8" x 5 1/2"	3/8"	1" O.D., ** I.D.
6" x 4"	3/8" x 7"	3/8"	1" O.D., ** I.D.

* Use vandal resistant hardware where possible

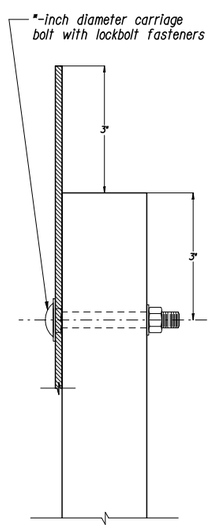

SIGN MOUNTING WITHOUT STIFFENERS

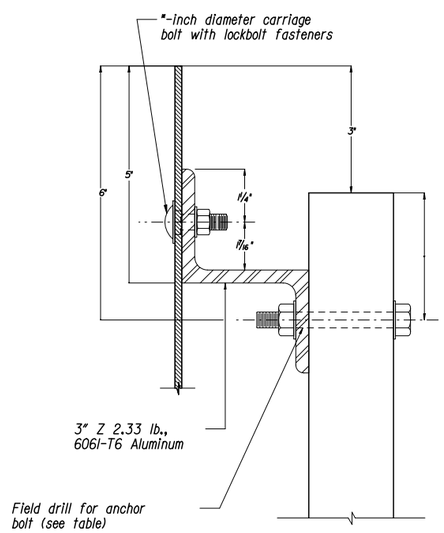

SIGN MOUNTING WITH STIFFENERS
(ALUMINUM BACKING ZEES)

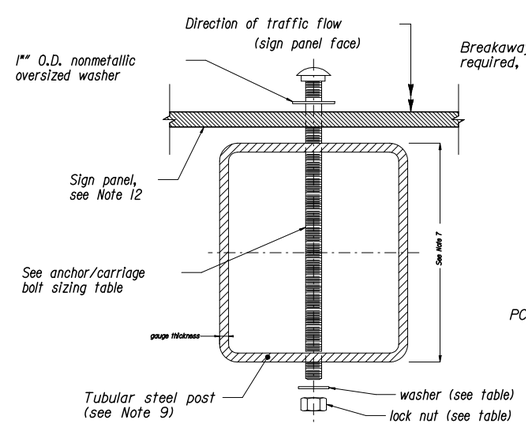

SECTION A-A

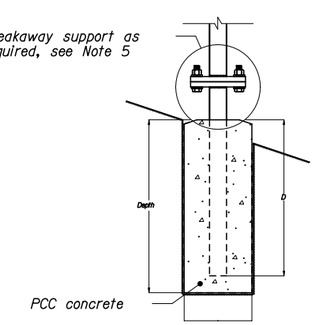

FOOTING DETAIL
(SEE STEEL POST SELECTION TABLE FOR DIMENSIONS)

U.S. DEPARTMENT OF TRANSPORTATION
FEDERAL HIGHWAY ADMINISTRATION
EASTERN FEDERAL LANDS HIGHWAY DIVISION
STERLING, VIRGINIA

U.S. CUSTOMARY DETAIL

PERMANENT SIGN INSTALLATION STEEL POSTS

DETAIL APPROVED FOR USE

REVISED:

DETAIL E633-B

5/20/2008 3:21:57 PM T:\HWY\ARK\Vicksall\Park\VICK 10(2)-12(2)-19(1)\S-VICK10(2)_std.dgn

NPS NO.	REG	STATE	PROJECT	SHEET NO.
306 41,918	SE	MS	PRA - VICK 10(2),12(2),19(1)	S34

STEEL POST FOOTING DATA TABLE

POST SIZE	NOMINAL SIZE (IN.)	STUB		FOOTING	
		PROJ.	LENGTH	DIA.	MINIMUM DEPTH
a	2 X 2	4"	2'	12"	3'
b	3 X 4	4"	2'	15"	3'
c	4 X 6	4"	2'	15"	3'

STEEL POSTS FOR GROUND MOUNTED SIGNS

POST SIZE	NOMINAL SIZE (IN.)	BOLT SPECIFICATIONS	BASE CONNECTION DATA TABLE (Inches)									
			A	B	C	D	E	F	t_1	t_2	w	R
a	2 X 2	5/8"/0 X 2 1/2" HS 450 IN. - LBS.	6½	4	5	1¾	¾	1⅛	⅝	3/16	3/16	11/16
b	3 X 4		8½	4	7	1¾	¾	1⅛	⅝	3/16	¼	11/16
c	4 X 6	5/8"/0 X 3" HS 450 IN - LB	10	5	8½	2½	¾	1¼	¾	¼	5/16	11/16

FUSE PLATE DATA TABLE (Inches)

POST SIZE	G	H	J	K	L	M	N	d_1	t_3	c_1	BOLT DIAM.	TORQUE FT.-LBS.
a	4	2¼	1⅛	2	⅞	9/16	⅝	7/16	¼	¼	⅜	200
b	4	2¼	1⅛	3	1¼	⅞	⅝	9/16	5/16	¼	½	200
c	4½	2⅜	1¼	4	1¾	1⅛	⅞	11/16	⅜	⅜	⅝	200

NOTES:

1. Breakaway design is not required for signs placed behind protective barriers.
2. Breakaway assembly to be installed in the direction of major traffic.
3. The multiple post breakaway detail to be used on single posts in medians where exposed to opposing lanes of traffic.
4. Fuse plates are to be used on multiple post installations only.
5. The breakaway plates, only are to be painted brown to match the final appearance of the weathering steel posts.

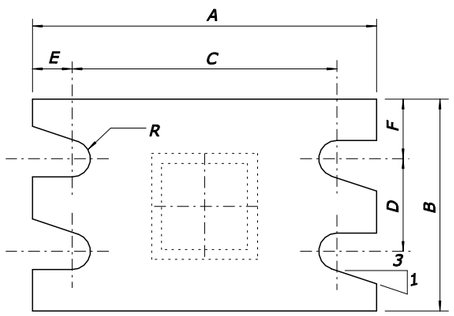

SECTION A-A

BREAKAWAY PLATE

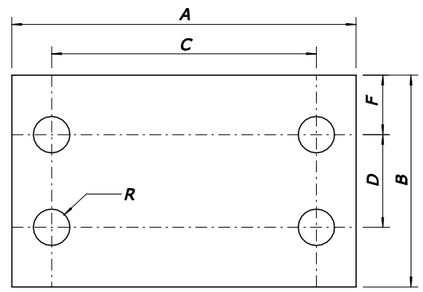

BOND BREAKING PLATE

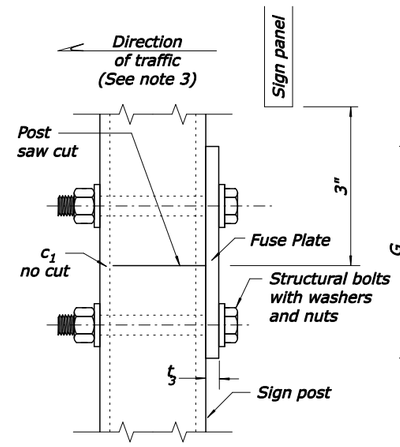

SIDE ELEVATION

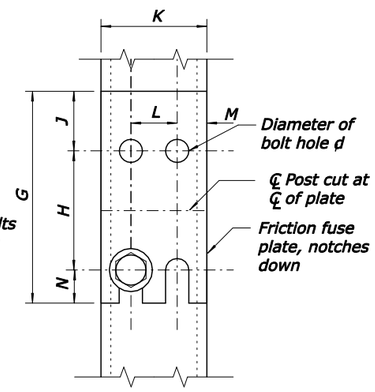

FRONT ELEVATION
(See Note 5)

FUSE PLATE

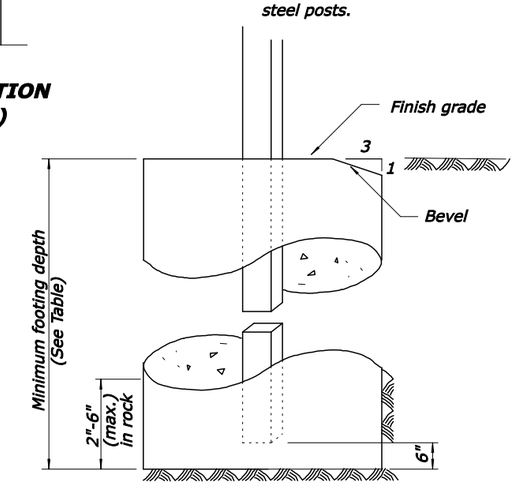

CONCRETE FOOTING DETAILS

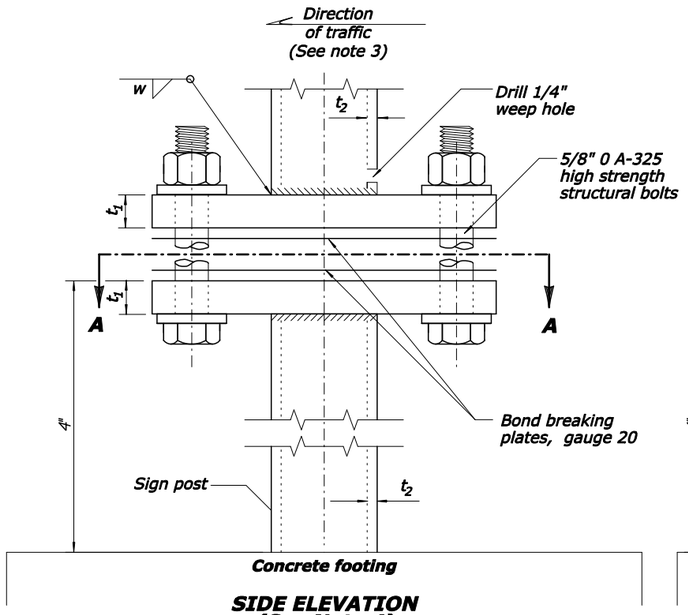

SIDE ELEVATION
(See Note 4)

MULTIPLE POST

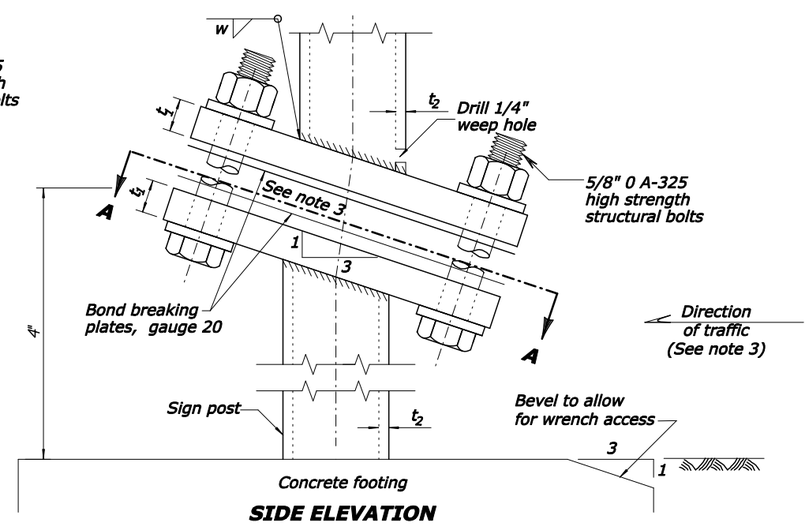

SIDE ELEVATION

SINGLE POST

NO SCALE

U.S. DEPARTMENT OF TRANSPORTATION
FEDERAL HIGHWAY ADMINISTRATION
EASTERN FEDERAL LANDS HIGHWAY DIVISION
STERLING, VIRGINIA

U.S. CUSTOMARY DETAIL

BREAKAWAY SIGN SUPPORT, WEATHERING STEEL

DETAIL APPROVED FOR USE

REVISED: 07/98 03/07

DETAIL E633-02

5/20/2008 3:22:09 PM T:\HWY\AK\VicksMillParkVICK 10(2)-12(2)-19(1)S-VICK(02)_std.dgn

NPS NO.	REG	STATE	PROJECT	SHEET NO.
306 / 41,918	SE	MS	PRA - VICK 10(2),12(2),19(1)	S35

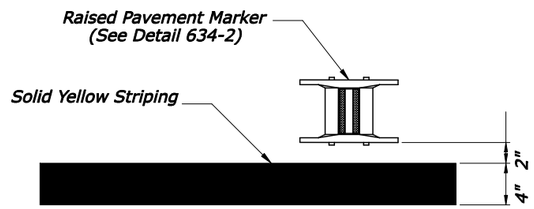

DETAIL A

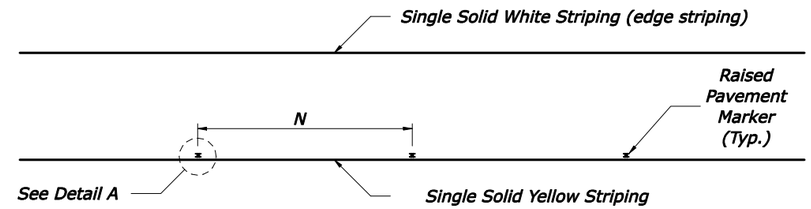

SINGLE SOLID YELLOW STRIPING WITH RAISED PAVEMENT MARKERS

NOTES:

1. All striping shall be in accordance with the Manual on Uniform Traffic Control Devices (MUTCD) latest edition.
2. Space and install Raised Pavement Markers in accordance with the MUTCD and as shown in this detail or as directed by the CO.

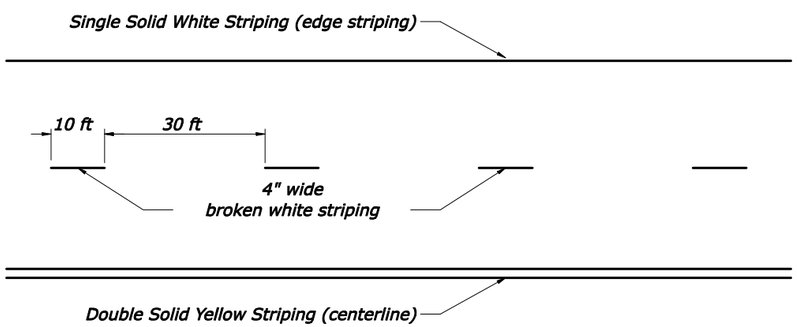

BROKEN SINGLE WHITE AND DOUBLE SOLID YELLOW STRIPING

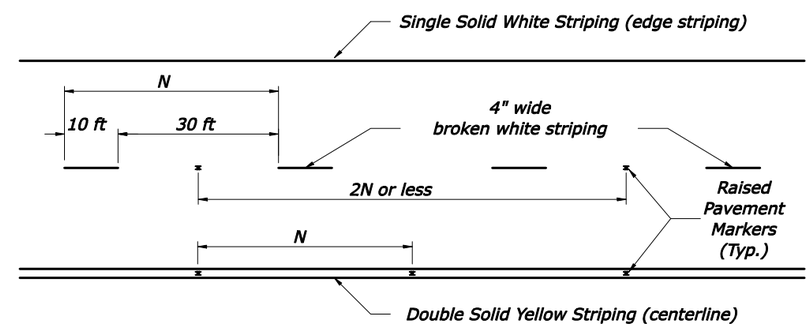

BROKEN SINGLE WHITE AND DOUBLE SOLID YELLOW STRIPING WITH RAISED PAVEMENT MARKERS

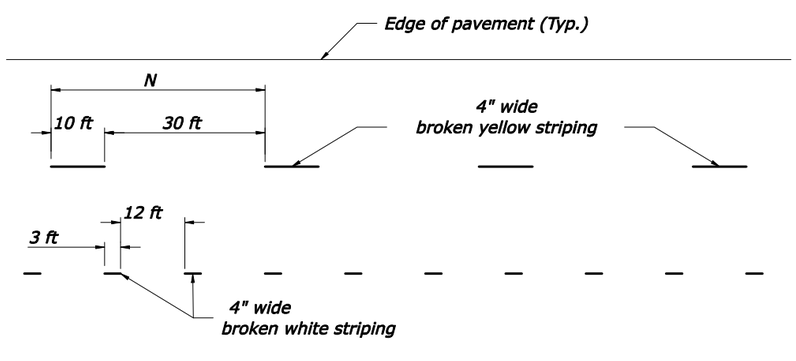

BROKEN SINGLE YELLOW AND DOTTED WHITE STRIPING

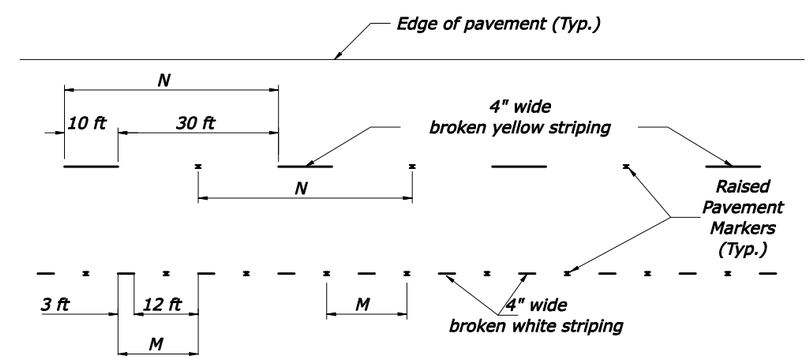

BROKEN SINGLE YELLOW AND DOTTED WHITE STRIPING WITH RAISED PAVEMENT MARKERS

NO SCALE

U.S. DEPARTMENT OF TRANSPORTATION
FEDERAL HIGHWAY ADMINISTRATION
EASTERN FEDERAL LANDS HIGHWAY DIVISION
STERLING, VIRGINIA

U.S. CUSTOMARY DETAIL

PAVEMENT MARKINGS WITH AND WITHOUT RAISED PAVEMENT MARKERS

DETAIL APPROVED FOR USE 3/2003
REVISED: 06/2007

DETAIL E634-03

5/20/2008 3:22:21 PM T:\HWY\AK\Vicks\MilPark\VICK 10(2)-12(2)-19(1)\S-VICK10(2)_sfd.dgn

NPS NO.	REG	STATE	PROJECT	SHEET NO.
306 / 41,918	SE	MS	PRA - VICK 10(2),12(2),19(1)	S36

NOTE:

1. Place pavement word and symbol markings in accordance with the "Manual on Uniform Traffic Control Devices" (MUTCD), current edition.
2. All letters, numerals and symbols shall conform with the "Standard Highway Signs", current edition.
3. The Accessibility Parking Space marking only includes the accessibility symbol unless a border is indicated in the Striping Plans.

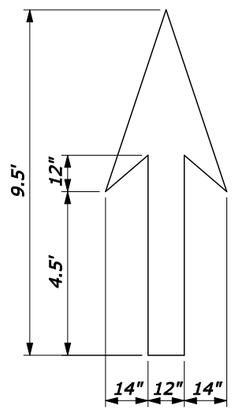

THROUGH LANE-USE ARROW

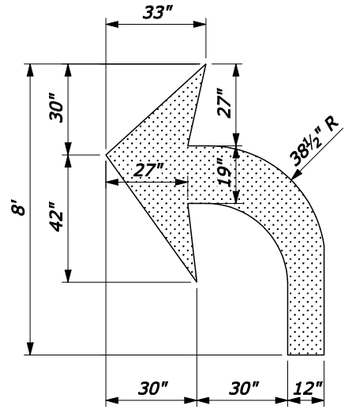

TURN LANE-USE ARROW

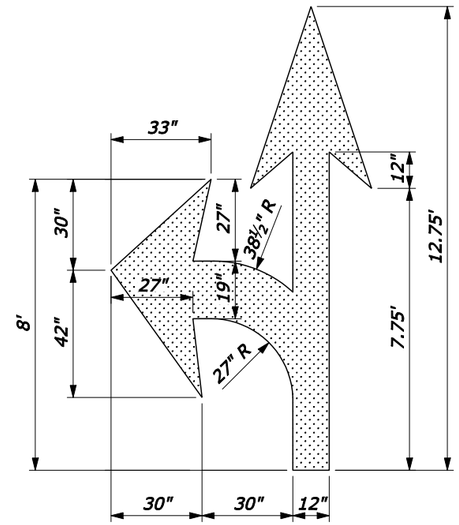

TURN AND THROUGH LANE-USE ARROW

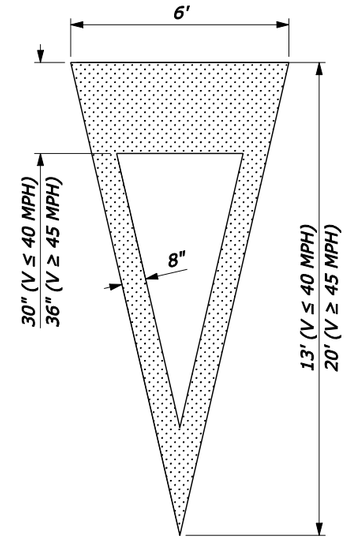

YIELD AHEAD TRIANGLE SYMBOL

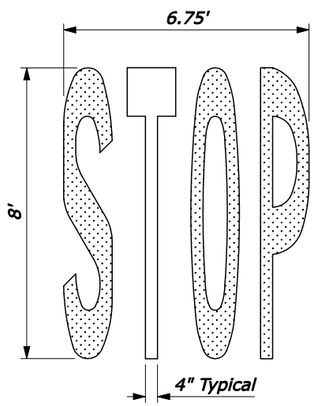

"STOP" WORD MARKING

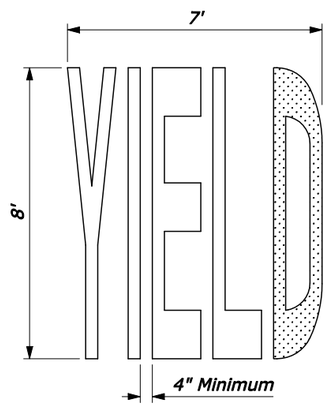

"YIELD" WORD MARKING

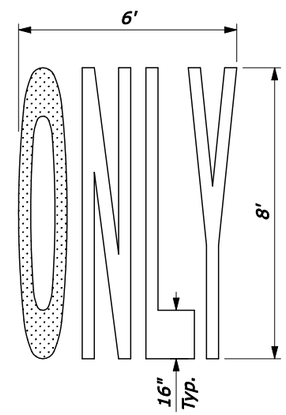

"ONLY" WORD MARKING

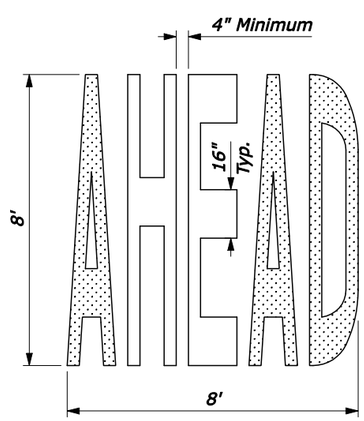

"AHEAD" WORD MARKING

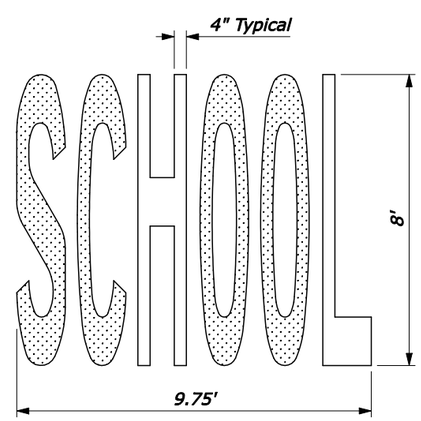

"SCHOOL" WORD MARKING

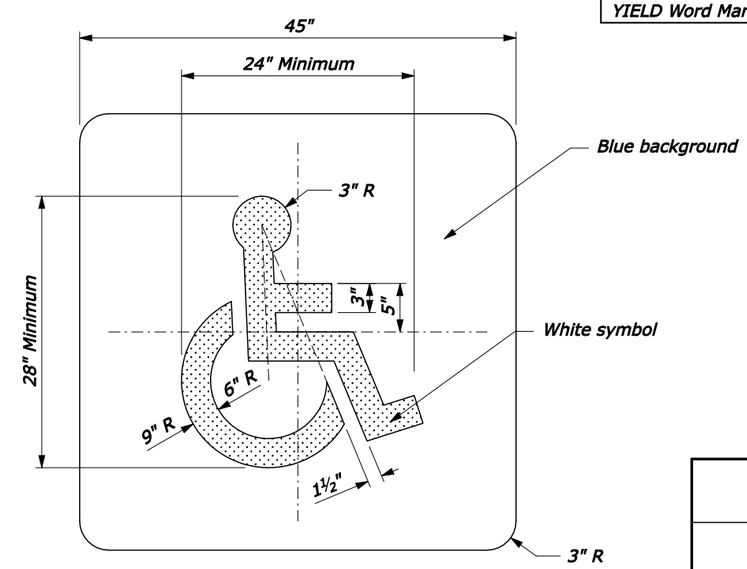

ACCESSIBILITY PARKING SPACE MARKING

NO SCALE

PAVEMENT MARKING AREAS

TYPE	SQFT
Through Lane-Use Arrow	12
Turn Lane-Use Arrow	16
Turn and Through Lane-Use Arrow	26
Yield Ahead Arrow (V<70 km/h)	26
Yield Ahead Arrow (V≥70 km/h)	37
Accessibility Marking (symbol only)	2
Accessibility Marking w/ border (White)	5
Accessibility Marking w/ border (Blue)	9
AHEAD Word Marking	30
ONLY Word Marking	21
SCHOOL Word Marking	33
STOP Word Marking	22
YIELD Word Marking	24

U.S. DEPARTMENT OF TRANSPORTATION
FEDERAL HIGHWAY ADMINISTRATION
EASTERN FEDERAL LANDS HIGHWAY DIVISION
STERLING, VIRGINIA

U.S. CUSTOMARY DETAIL

PAVEMENT MARKINGS SYMBOLS AND WORDS

DETAIL APPROVED FOR USE 3/2003

REVISED: 06/2007

DETAIL E634-A

5/20/2008 3:22:35 PM T:\HWY\ARK\Vicksb\ParkVICK 10(2)\2(2)\9\IS-V\CK10(2)_std.dgn

NPS NO.	REG	STATE	PROJECT	SHEET NO.
306 / 41,918	SE	MS	PRA - VICK 10(2),12(2),19(1)	S37

NOTES:

1. Place pavement word and symbol markings in accordance with the "Manual on Uniform Traffic Control Devices" (MUTCD), current edition.
2. All letters, numerals and symbols shall conform with the "Standard Alphabets for Highway Signs and Pavement Markings".

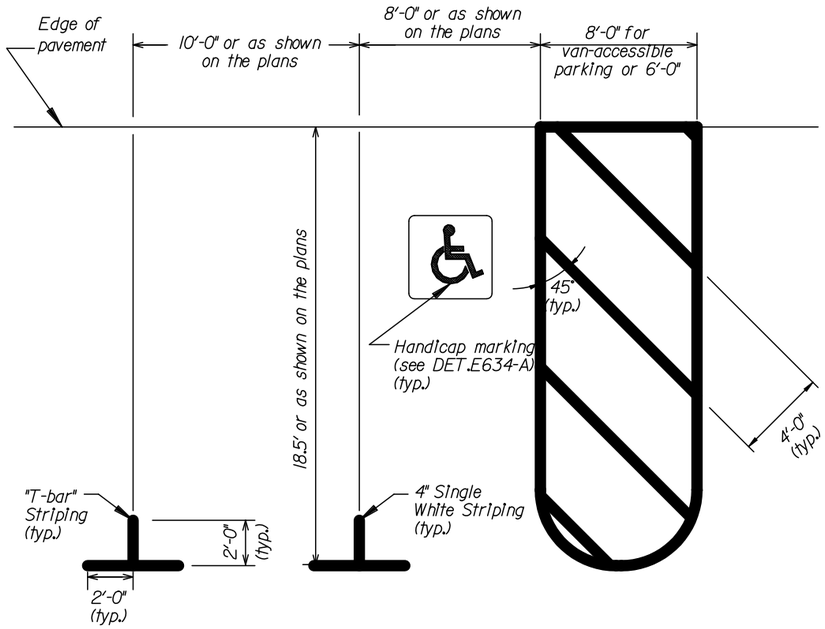

PARKING STALL "T-BAR" STRIPING

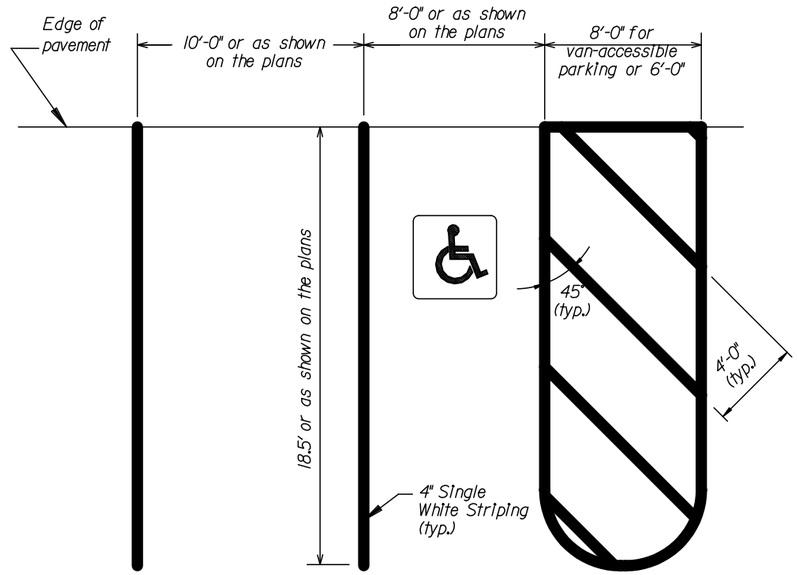

PARKING STALL STRIPING

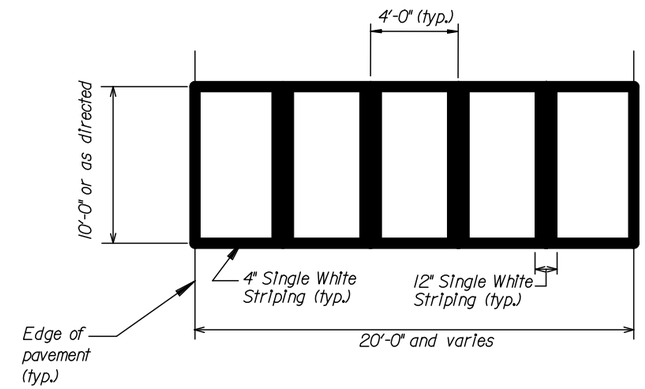

CROSSWALK STRIPING

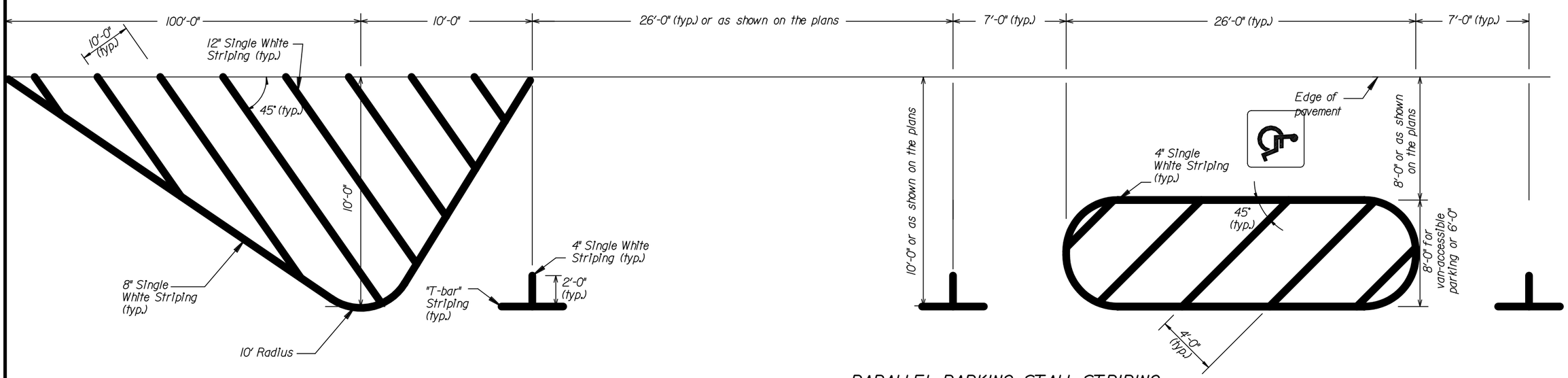

PARALLEL PARKING STALL STRIPING

NO SCALE

U.S. DEPARTMENT OF TRANSPORTATION
FEDERAL HIGHWAY ADMINISTRATION
EASTERN FEDERAL LANDS HIGHWAY DIVISION
STERLING, VIRGINIA

U.S. CUSTOMARY DETAIL

PARKING STALL AND CROSS-WALK PAVEMENT MARKINGS

DETAIL APPROVED FOR USE

REVISED:

DETAIL E634-B

5/20/2008 3:22:47 PM T:\HWY\AK\Vicksburg\Park\VICK 10(2)-12(2)-19(1)\S-VICK10(2)_std.dgn

NPS NO.	REG	STATE	PROJECT	SHEET NO.
306 / 41,918	SE	MS	PRA - VICK 10(2),12(2),19(1)	S38

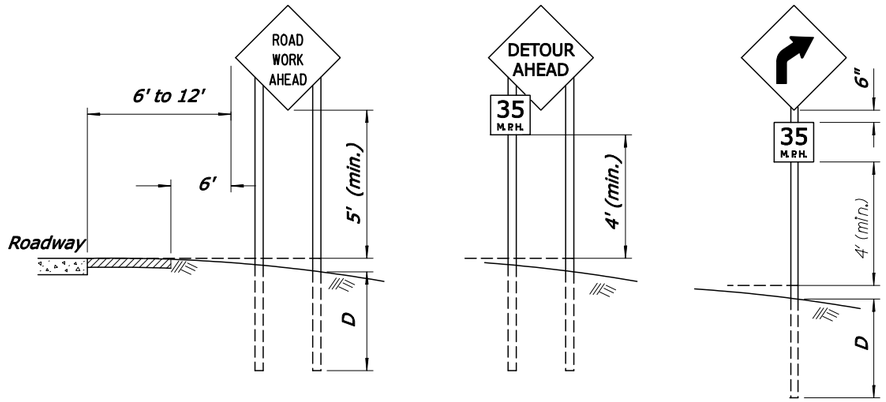

RURAL AREA

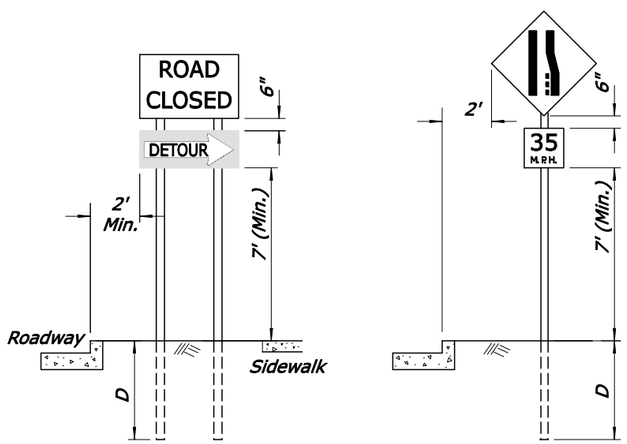

URBAN AREA

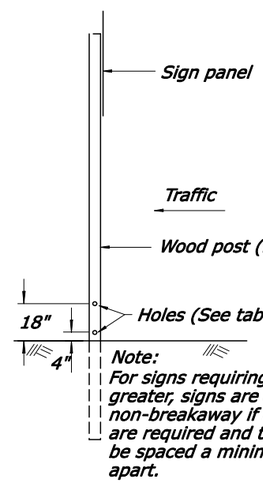

Note:
For signs requiring 6"x6" posts and greater, signs are considered to be non-breakaway if multiple posts are required and the posts cannot be spaced a minimum of 7 feet apart.

BREAKAWAY SUPPORT DETAIL
(FIXED SIGNS - 4" x 6" AND GREATER POSTS)

FIXED ROADWAY SIGNS

Post size	D	Hole Dia.	Maximum Sign Area - Sq. ft.			
			1 Post	2 Posts	3 Posts	4 Posts
4" x 4"	4'	None Req'd	10	20		
4" x 6"	4'	1.5"		35	50	70
6" x 6"	5'	2"		50	75	100
6" x 8"	5'	3"		85	125	165

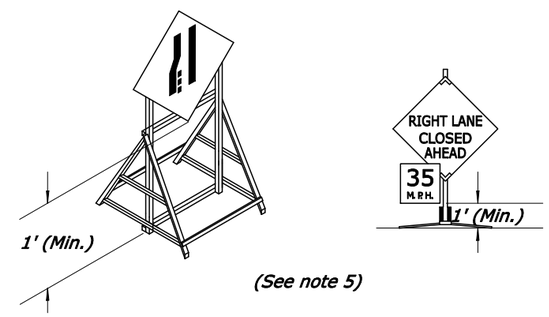

(See note 5)

PORTABLE SIGNS
(See note 4)

Notes:

1. Wood posts are 4"x 4" unless otherwise indicated.
2. Mount signs that are wider than 3-feet or larger than 10 square feet on double posts.
3. All lumber dimensions are nominal.
4. The Contractor may submit alternate details for portable signs, however, sign mounts hold the sign face in a vertical plane. Portable signs may be mounted lower than fixed signs when approved by the CO. Ensure all portable sign supports meet the requirements of NCHRP-350 for crashworthiness.
5. When parking is permitted within 200 feet of the sign, mount the sign a minimum of 7 feet above the pavement surface.
6. When approved by the CO and the Utility Company, utility poles may be used for sign mounting.
7. For posts greater than 4" x 4" see the Breakaway Support Detail. If breakaway design cannot be used, due to post spacing, the sign should be placed outside the clearzone or be shielded by barrier. Do not place holes in posts of non-breakaway signs

NO SCALE

U.S. DEPARTMENT OF TRANSPORTATION
FEDERAL HIGHWAY ADMINISTRATION
EASTERN FEDERAL LANDS HIGHWAY DIVISION
STERLING, VIRGINIA

DETAIL

CONSTRUCTION TRAFFIC CONTROL SIGN MOUNTING

DETAIL APPROVED FOR USE
REVISED: 02/07 06/07

DETAIL
E635-01

5/20/2008 3:23:01 PM T:\HWY\AK\Vicksburg\Park\VICK 10(2)-12(2)-19(1)\S-VICK10(2)_std.dgn

NPS NO.	REG	STATE	PROJECT	SHEET NO.
306 / 41,918	SE	MS	PRA - VICK 10(2),12(2),19(1)	S39

TYPICAL APPLICATION: ONE WAY, TWO LANE ROADWAY, CLOSING PARTIAL LANE

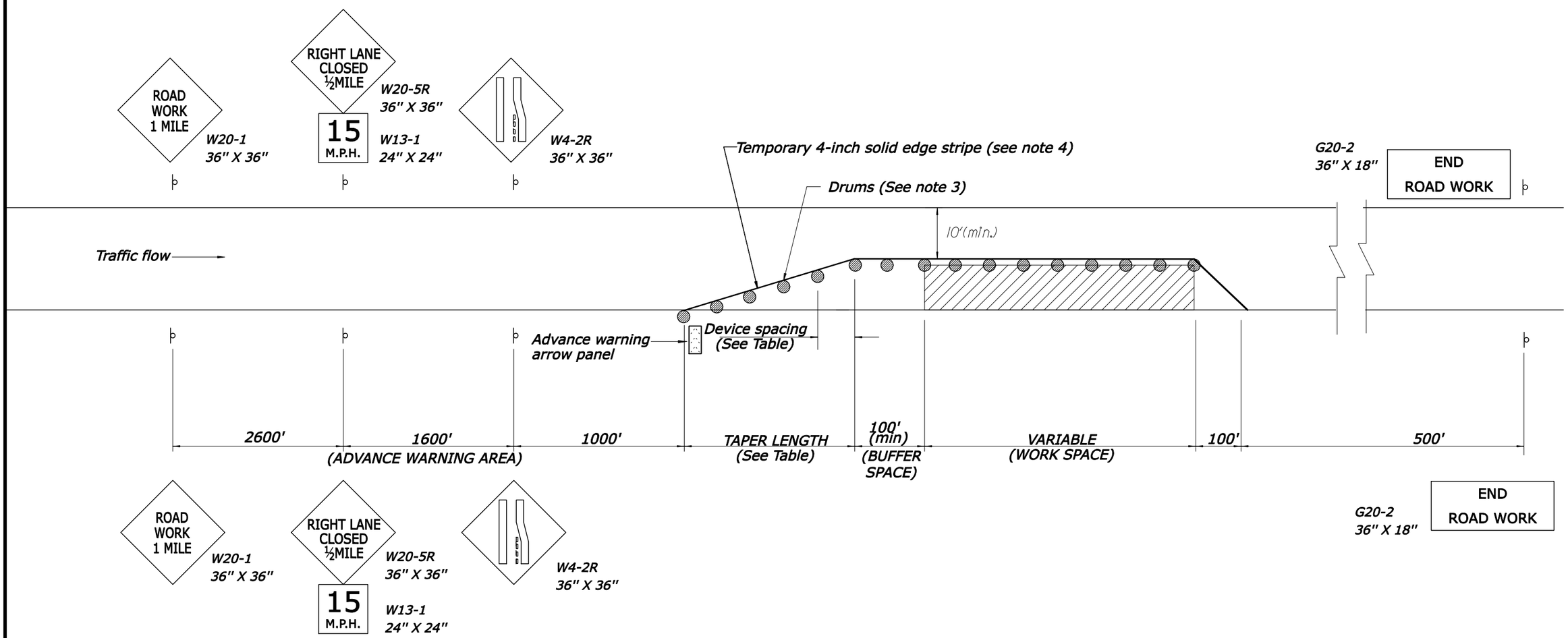

APPROACH SPEED (MPH)	MINIMUM TAPER LENGTH (FT) LANE WIDTH			CHANNELIZING DEVICE SPACING (FT)	
	10 ft.	11 ft.	12 ft.	TAPER AREA	WORK AREA
25	105	115	125	25	50
30	150	165	180	30	60
35	205	225	245	35	70
40	270	295	320	40	80
45	450	495	540	45	90
50	500	550	600	50	100
55	550	605	660	55	100

** Speed is based on the regulatory posted speed and not the traffic control warning speed.*

NOTES:

1. Final location and spacing of signs and devices may be changed to fit field conditions as approved by the CO.
2. For operations that require a lane closure for a day or less, drums may be substituted with cones, type A in the work area.
3. Right lane closure is shown. For left lane closure, substitute W20-5R and W4-2R with W20-5L and W4-2L.
4. For long-term operations (operations where the lane is continuously closed for more than three days) remove conflicting pavement markings and place edge line as shown.

NO SCALE

U.S. DEPARTMENT OF TRANSPORTATION
FEDERAL HIGHWAY ADMINISTRATION
EASTERN FEDERAL LANDS HIGHWAY DIVISION
STERLING, VIRGINIA

U.S. CUSTOMARY DETAIL

CONSTRUCTION TRAFFIC CONTROL PARTIAL LANE CLOSURE LAYOUT

DETAIL APPROVED FOR USE

REVISED:

DETAIL E635-5A

5/20/2008 3:23:17 PM T:\HWY\ARK\Vicksburg\Park\VICK 10(2)\12(2)\19(1)\S-VICK10(2)_std.dgn

NPS NO.	REG	STATE	PROJECT	SHEET NO.
306 / 41,918	SE	MS	PRA - VICK 10(2),12(2),19(1)	S40

LENGTH AND SPACING TABLE

APPROACH SPEED*	LENGTH OF BUFFER SPACE	CHANNELIZING DEVICE		
		TAPER AREA	BUFFER SPACE	WORK SPACE
MPH	FEET	SPACING IN FEET		
25	155	20	50	50
30	200	20	60	60
35	250	20	70	70
40	305	20	80	80
45	360	20	90	90
50	425	20	100	100
55	495	20	110	110

* Approach speed based on the regulatory posted speed, not the advisory speed.

SIGN SPACING TABLE

ROAD TYPE	DISTANCE BETWEEN SIGNS IN FEET		
	A	B	C
Urban 40 MPH and less	100	100	100
Urban 45 MPH and greater	350	350	350
Rural	500	500	500
Expressway/Freeway	1000	1500	2640

NOTE:

1. Signs are shown for one direction of travel only. Place devices similar to those depicted for the opposite direction of travel.
2. Final location and spacing of signs and devices may be changed to fit field conditions as approved by the CO.
3. For pilot car operation, mount the PILOT CAR FOLLOW ME (G20-4) sign at a conspicuous location on the rear of vehicle. Prominently display the name of the contractor on the pilot car.
4. If closure is completely within the project limits, eliminate the "ROAD WORK AHEAD" (W20-1) and "END ROAD WORK" (G20-2) signs.
5. For night time flagging operation, provide floodlighting at flagger stations.
6. For project specific minimum width, refer to Special Contract Requirements, Section 156.
7. Do not allow equipment, materials, or vehicles to be parked or stored in the buffer space.
8. If signs will be in place more than 72 consecutive hours, use ground-mounted post.

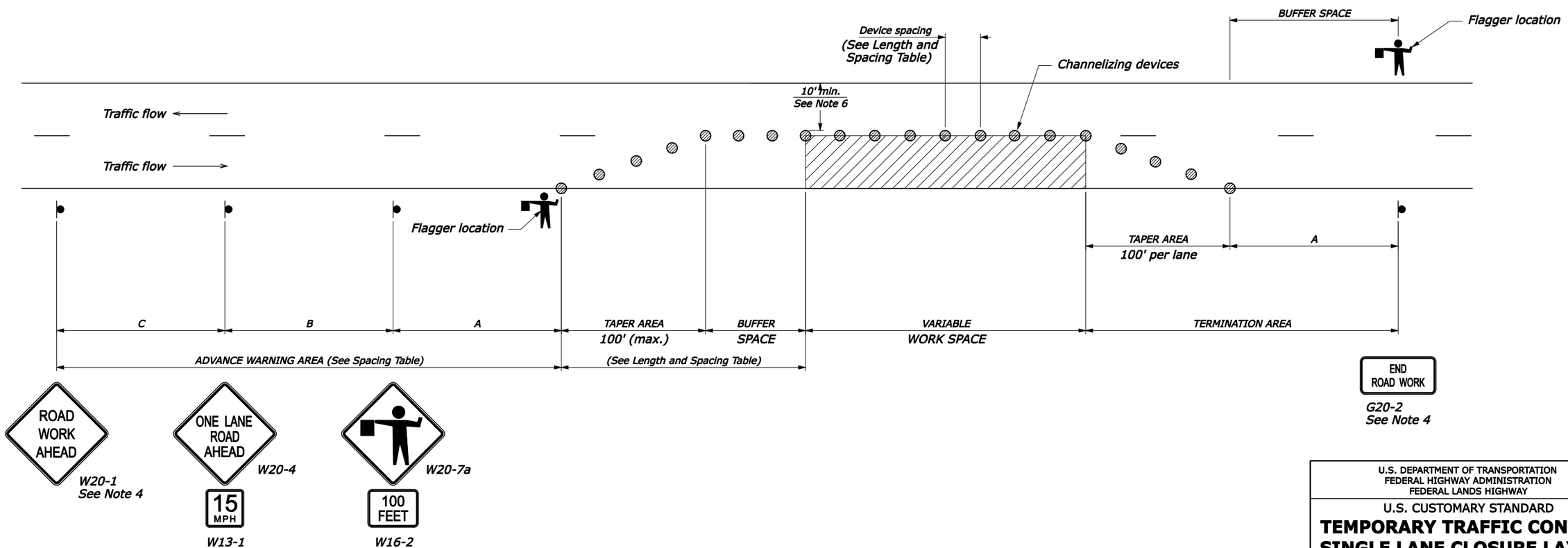

NO SCALE

U.S. DEPARTMENT OF TRANSPORTATION
FEDERAL HIGHWAY ADMINISTRATION
FEDERAL LANDS HIGHWAY

U.S. CUSTOMARY STANDARD

TEMPORARY TRAFFIC CONTROL SINGLE LANE CLOSURE LAYOUT (WITH FLAGGERS)

STANDARD APPROVED FOR USE 6/2005

REVISED:
DRAFT: 1/2007

STANDARD 635-6A

5/20/2008 3:23:29 PM T:\HWY\AK\Vicksburg\Park\VICK 10(2)-12(2)-19(1)\S-VICK10(2)_std.dgn

NPS NO.	REG	STATE	PROJECT	SHEET NO.
306 / 41,918	SE	MS	PRA - VICK 10(2),12(2),19(1)	S41

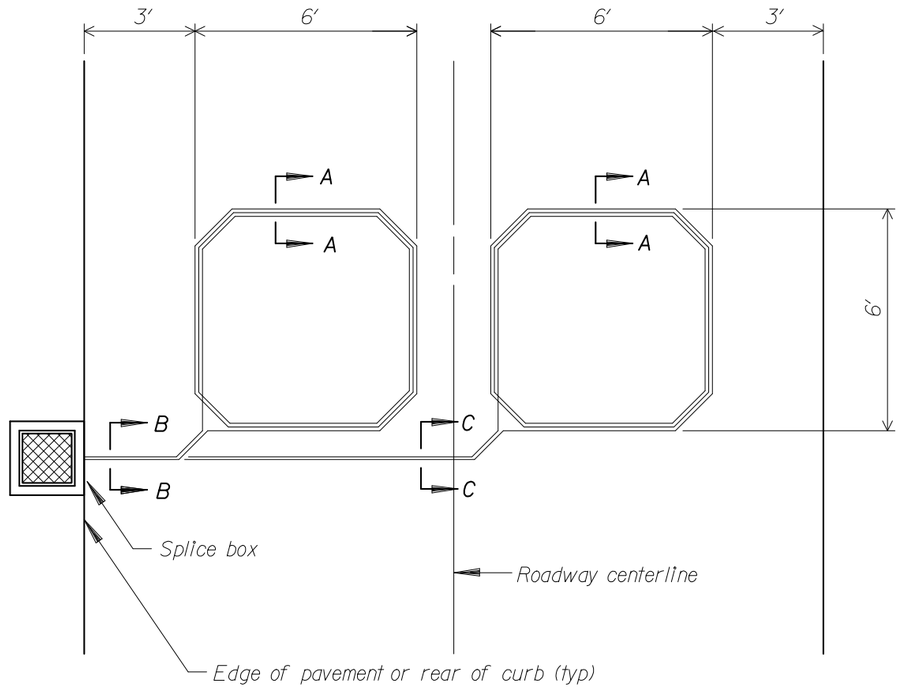

SCHEMATIC OF VEHICLE LOOP DETECTORS

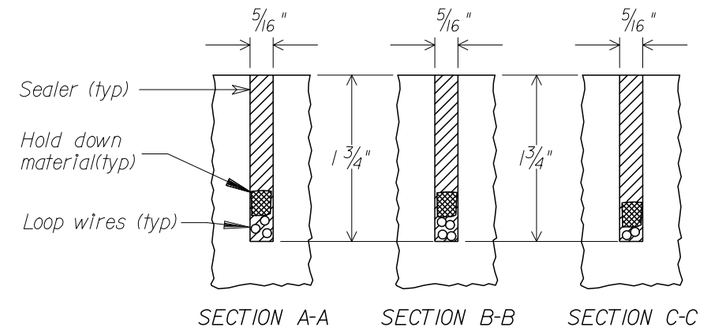

SECTIONS

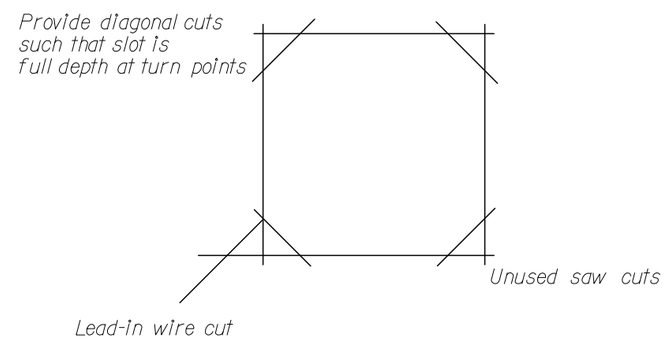

SAW CUT LAYOUT

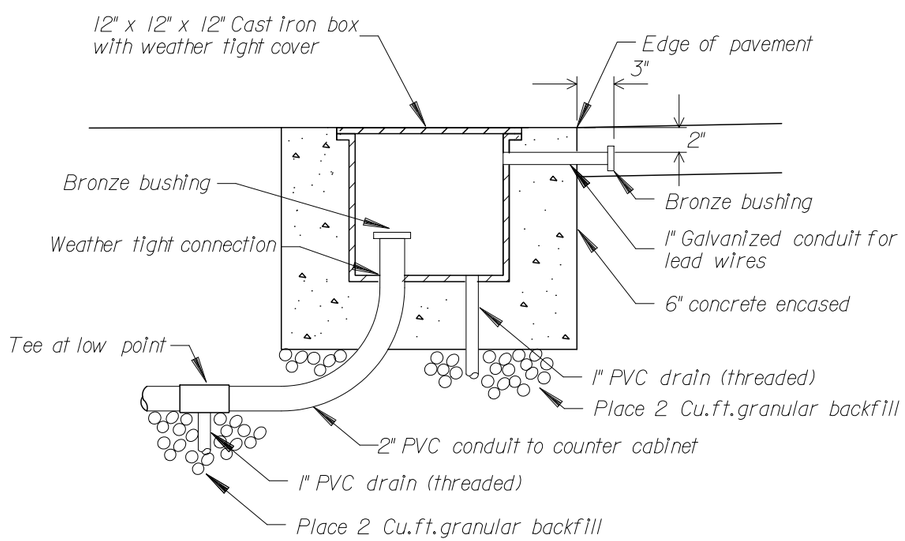

SPLICE BOX - WITHOUT CURB

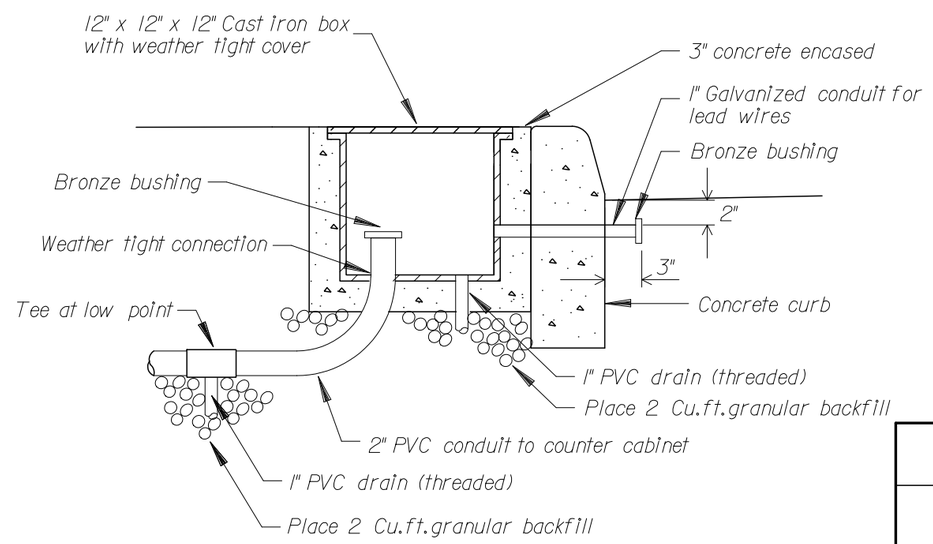

SPLICE BOX - WITH CURB

NO SCALE

U.S. DEPARTMENT OF TRANSPORTATION
FEDERAL HIGHWAY ADMINISTRATION
EASTERN FEDERAL LANDS HIGHWAY DIVISION
STERLING, VIRGINIA

DETAIL

TRAFFIC DETECTION DEVICES

DETAIL APPROVED FOR USE

REVISED: 08/00

DETAIL E636-1

5/20/2008 3:23:43 PM T:\HWY\AKV\IcksMillParkVICK 10(2)-12(2)-19(1)\S-VICK10(2)_std.dgn

NPS NO.	REG	STATE	PROJECT	SHEET NO.
306 41,918	SE	MS	PRA-VICK 10(2),12(2),19(1)	U1

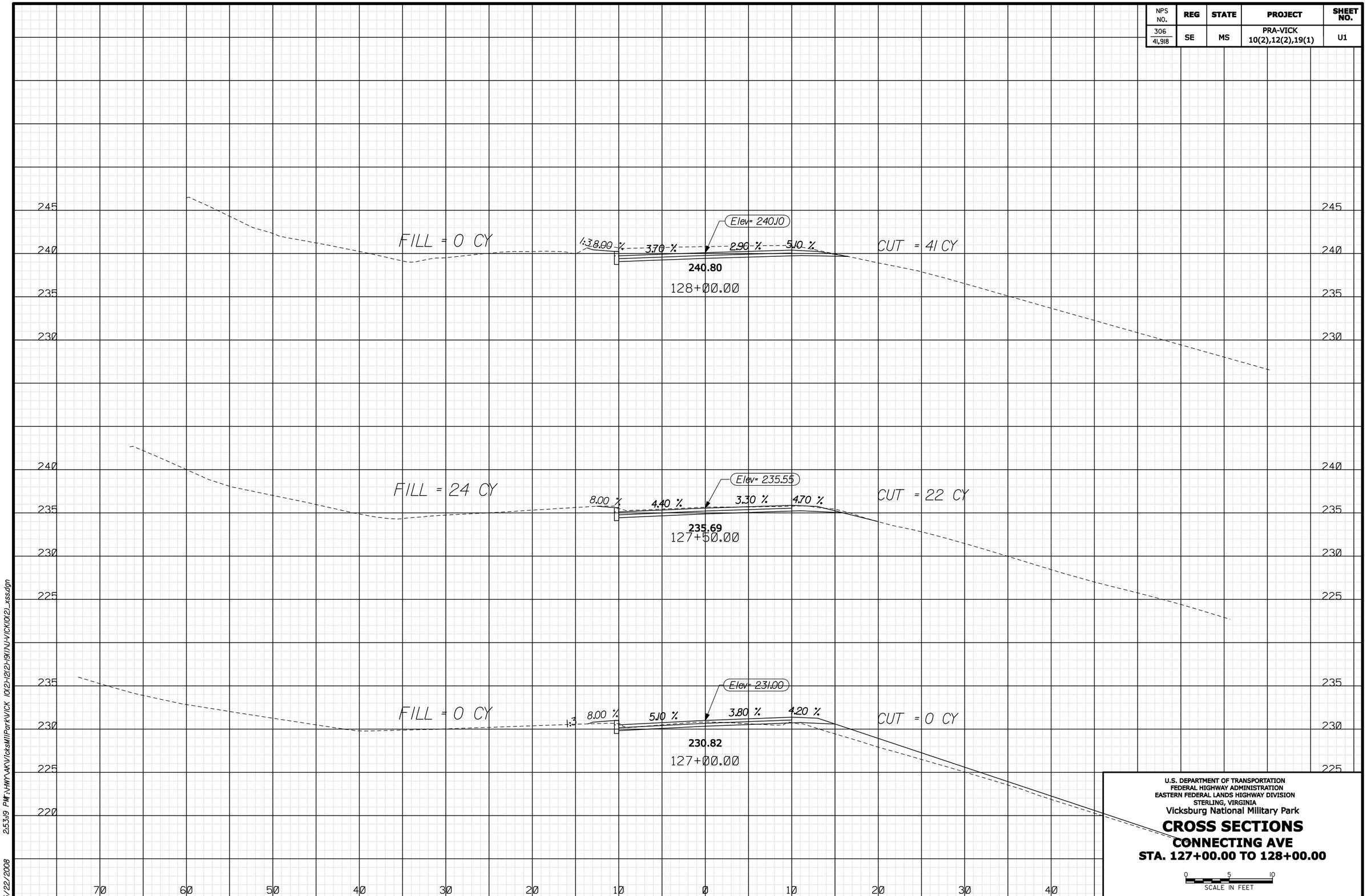

U.S. DEPARTMENT OF TRANSPORTATION
FEDERAL HIGHWAY ADMINISTRATION
EASTERN FEDERAL LANDS HIGHWAY DIVISION
STERLING, VIRGINIA

Vicksburg National Military Park

CROSS SECTIONS
CONNECTING AVE
STA. 127+00.00 TO 128+00.00

0 5 10
SCALE IN FEET

5/22/2008 2:53:19 PM F:\HMP\AKV\VicksMilPark\VICK 10(2)-12(2)-19(1)\U-VICK10(2)_xss.dgn

NPS NO.	REG	STATE	PROJECT	SHEET NO.
306 41,918	SE	MS	PRA-VICK 10(2),12(2),19(1)	U2

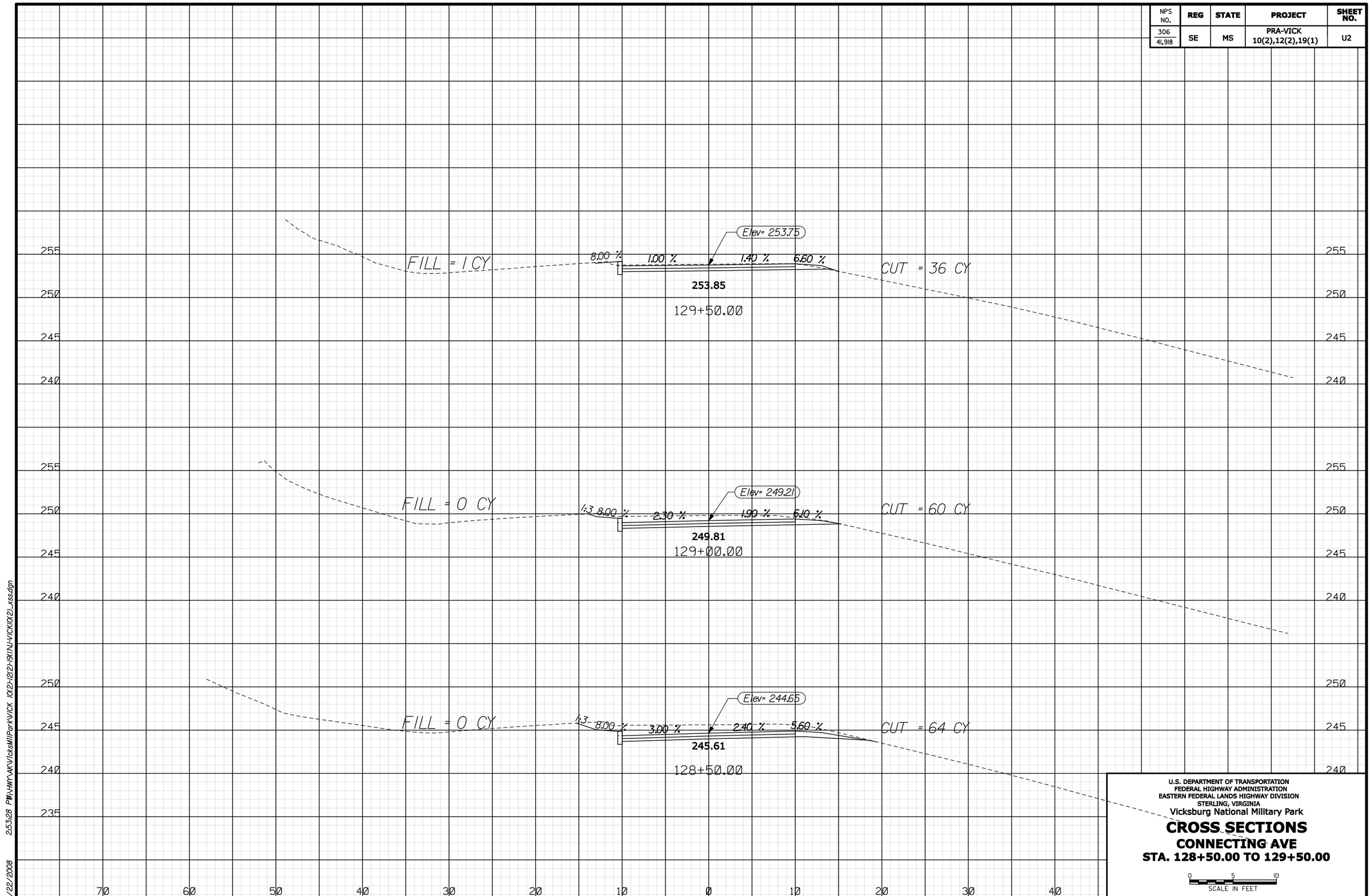

U.S. DEPARTMENT OF TRANSPORTATION
FEDERAL HIGHWAY ADMINISTRATION
EASTERN FEDERAL LANDS HIGHWAY DIVISION
STERLING, VIRGINIA

Vicksburg National Military Park

CROSS SECTIONS
CONNECTING AVE
STA. 128+50.00 TO 129+50.00

0 5 10
SCALE IN FEET

5/22/2008 2:53:28 PM P:\HMP\AKV\VicksMilPark\VICK 10(2)-12(2)-19(1)\U-VICK10(2)_xss.dgn

NPS NO.	REG	STATE	PROJECT	SHEET NO.
306 / 41,918	SE	MS	PRA-VICK 10(2),12(2),19(1)	U3

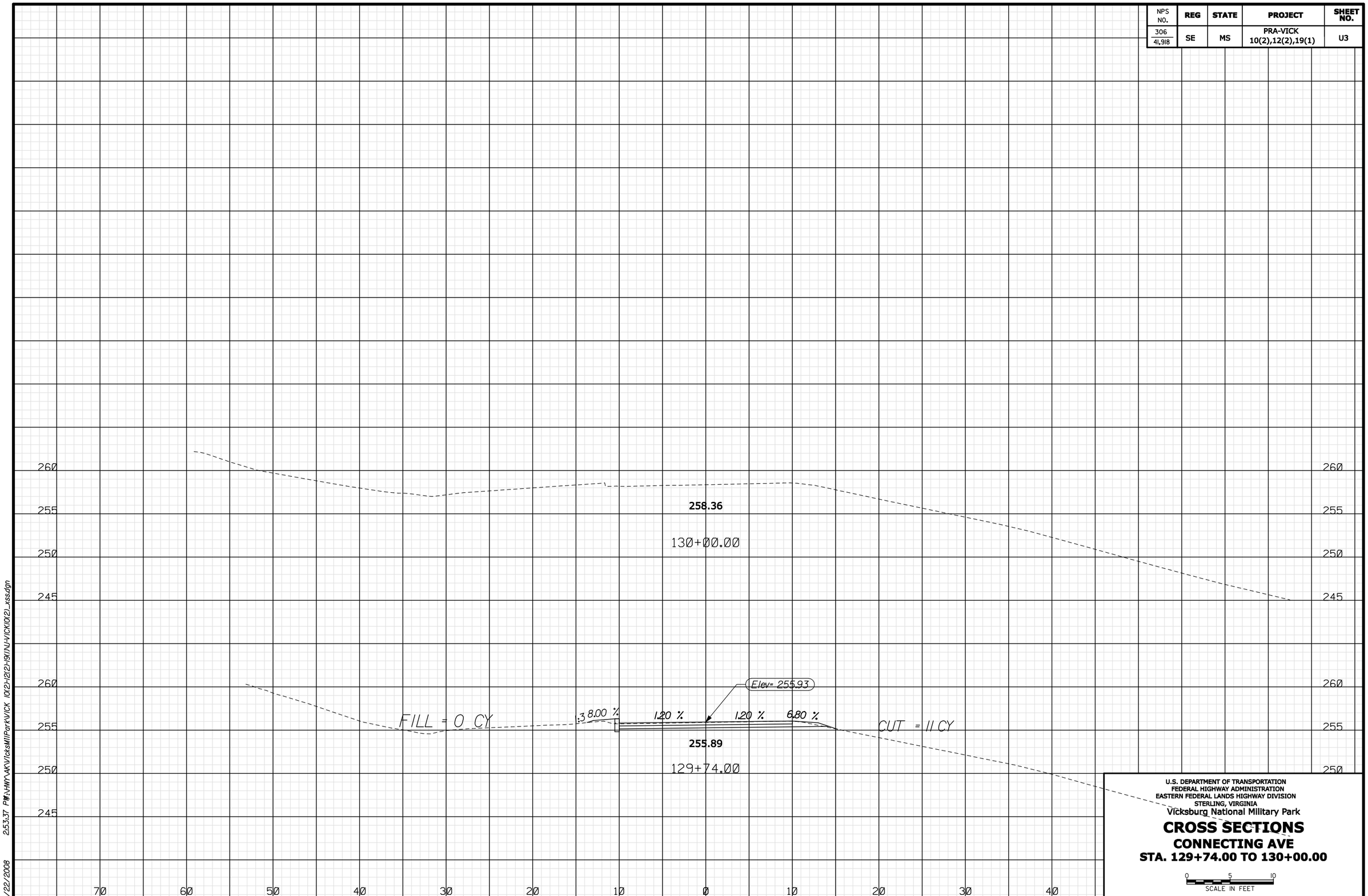

U.S. DEPARTMENT OF TRANSPORTATION
FEDERAL HIGHWAY ADMINISTRATION
EASTERN FEDERAL LANDS HIGHWAY DIVISION
STERLING, VIRGINIA

Vicksburg National Military Park

CROSS SECTIONS
CONNECTING AVE
STA. 129+74.00 TO 130+00.00

0 5 10
SCALE IN FEET

5/22/2008 2:53:37 PM F:\HMY\AK\Vicksburg\Park\VICK 10(2)-12(2)-19(1)\U-VICK10(2)_xss.dgn

NPS NO.	REG	STATE	PROJECT	SHEET NO.
306 41,918	SE	MS	PRA-VICK 10(2),12(2),19(1)	U4

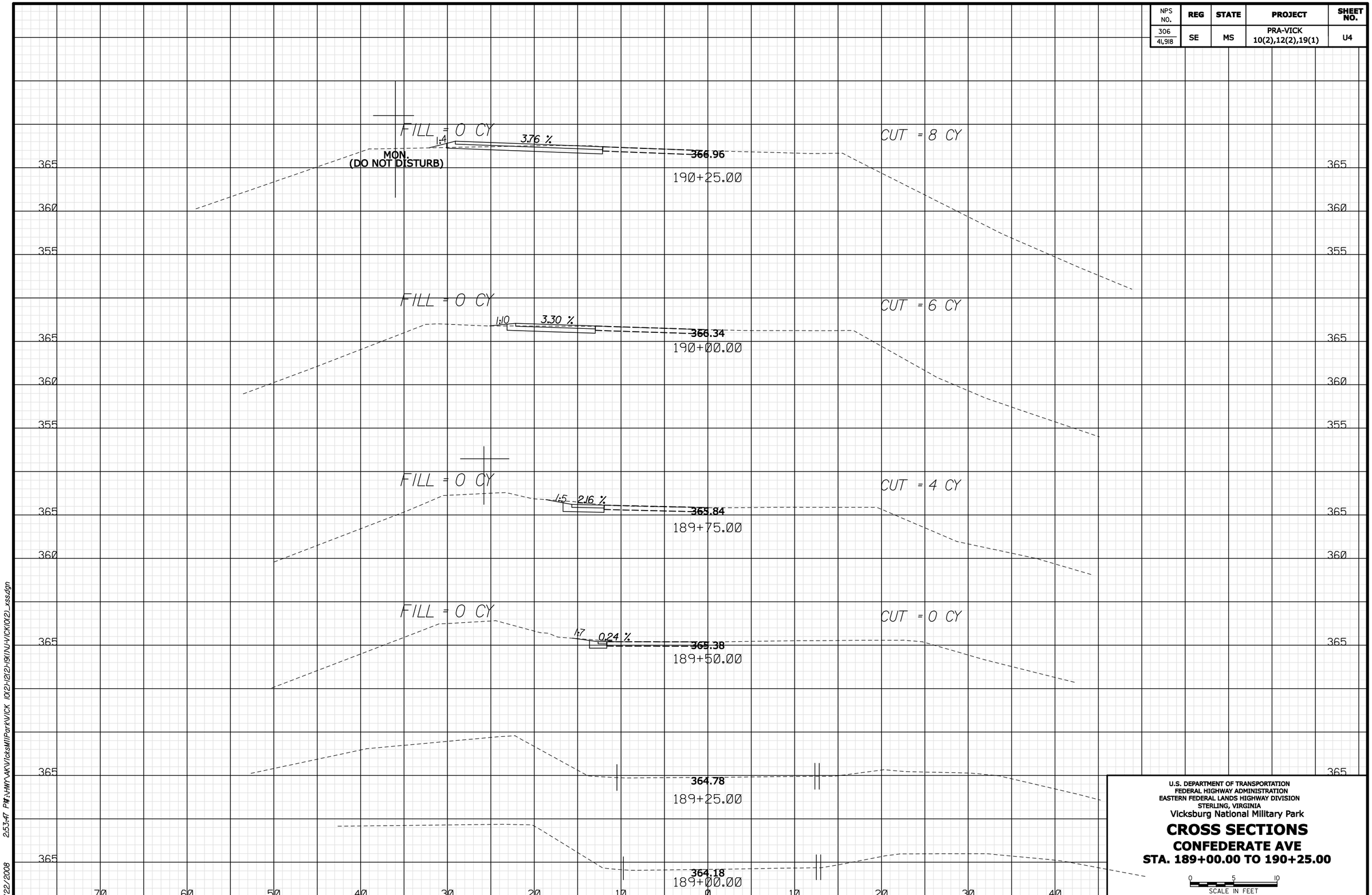

U.S. DEPARTMENT OF TRANSPORTATION
FEDERAL HIGHWAY ADMINISTRATION
EASTERN FEDERAL LANDS HIGHWAY DIVISION
STERLING, VIRGINIA

Vicksburg National Military Park

CROSS SECTIONS

CONFEDERATE AVE

STA. 189+00.00 TO 190+25.00

0 5 10
SCALE IN FEET

5/22/2008 2:53:47 PM:\:\HWY\AK\VicksMilPark\VICK 10(2)-12(2)-19(1)\NU-VICK(02)_xssdgn

NPS NO.	REG	STATE	PROJECT	SHEET NO.
306 / 41,918	SE	MS	PRA-VICK 10(2),12(2),19(1)	U5

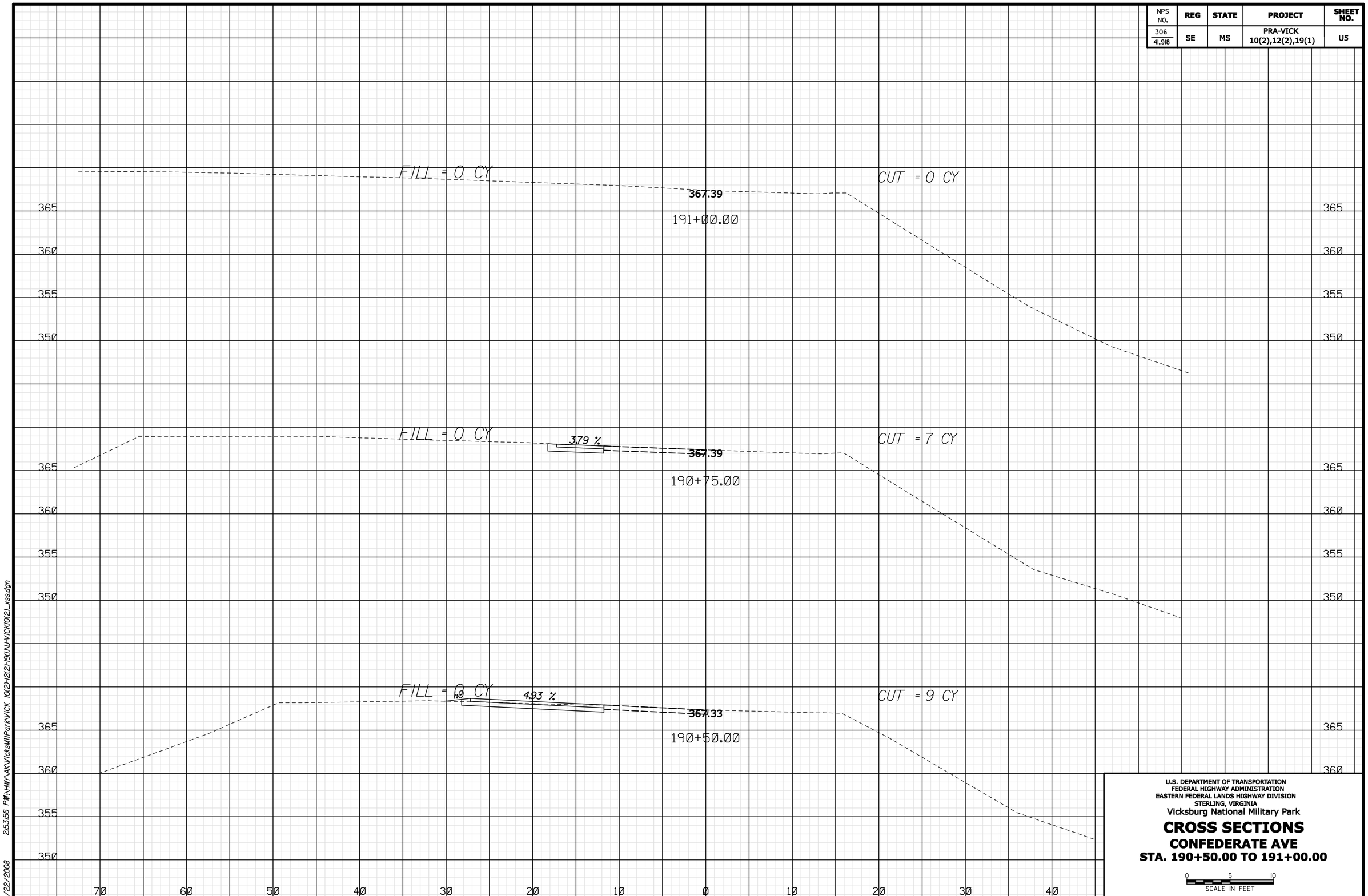

U.S. DEPARTMENT OF TRANSPORTATION
FEDERAL HIGHWAY ADMINISTRATION
EASTERN FEDERAL LANDS HIGHWAY DIVISION
STERLING, VIRGINIA

Vicksburg National Military Park

CROSS SECTIONS

CONFEDERATE AVE

STA. 190+50.00 TO 191+00.00

0 5 10
SCALE IN FEET

5/22/2008 2:53:56 PM A:\HMY\AK\Vicksburg\Park\VICK 10(2)-12(2)-19(1)\U-VICK10(2)_xss.dgn

NPS NO.	REG	STATE	PROJECT	SHEET NO.
306 41,918	SE	MS	PRA-VICK 10(2),12(2),19(1)	U6

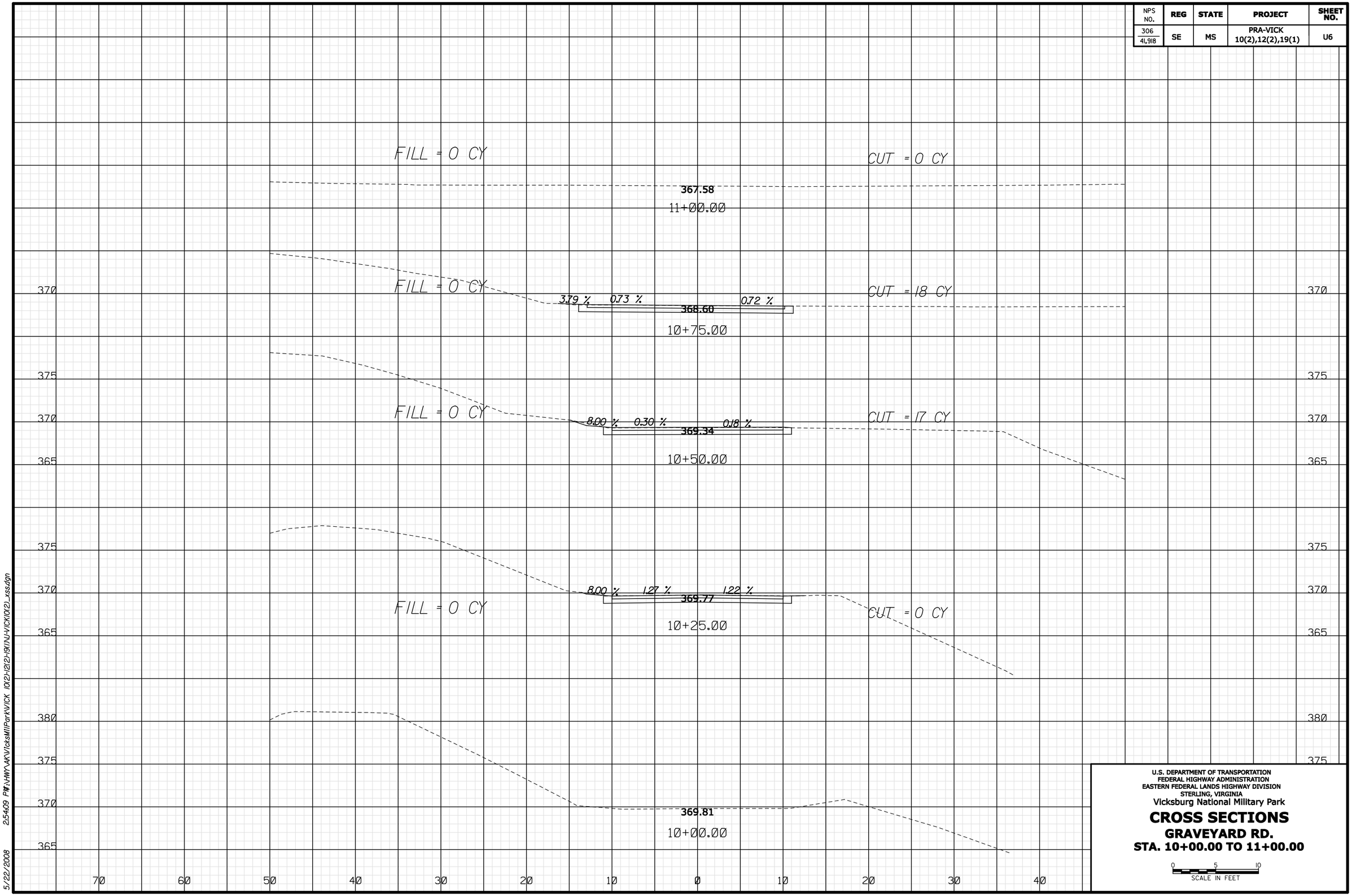

U.S. DEPARTMENT OF TRANSPORTATION
FEDERAL HIGHWAY ADMINISTRATION
EASTERN FEDERAL LANDS HIGHWAY DIVISION
STERLING, VIRGINIA

Vicksburg National Military Park

CROSS SECTIONS

GRAVEYARD RD.

STA. 10+00.00 TO 11+00.00

0 5 10
SCALE IN FEET

5/22/2008 2:54:09 PM F:\VHW\VA\VicksMilPark\VICK 10(2)-12(2)-19(1)\U-VICK10(2)_xss.dgn

NPS NO.	REG	STATE	PROJECT	SHEET NO.
306 41,918	SE	MS	PRA-VICK 10(2),12(2),19(1)	U-7

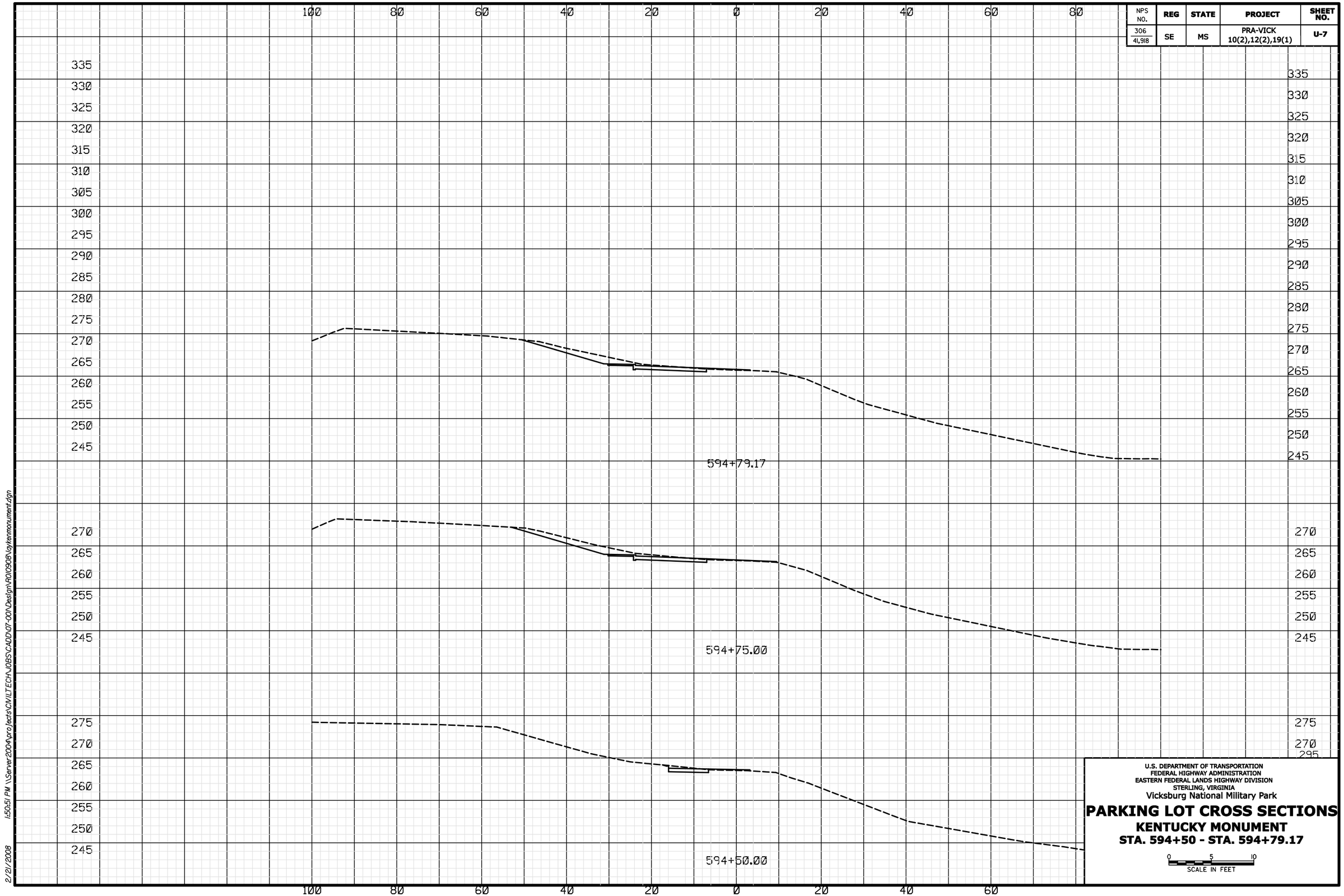

U.S. DEPARTMENT OF TRANSPORTATION
FEDERAL HIGHWAY ADMINISTRATION
EASTERN FEDERAL LANDS HIGHWAY DIVISION
STERLING, VIRGINIA
Vicksburg National Military Park

PARKING LOT CROSS SECTIONS
KENTUCKY MONUMENT
STA. 594+50 - STA. 594+79.17

0 5 10
SCALE IN FEET

2/21/2008 1:50:51 PM \\Server2004\projects\CIVILTECH\JOBS\CADD\07-001\Design\R010908\laytenmonument.dgn

NPS NO.	REG	STATE	PROJECT	SHEET NO.
306 41,918	SE	MS	PRA-VICK 10(2),12(2),19(1)	U-8

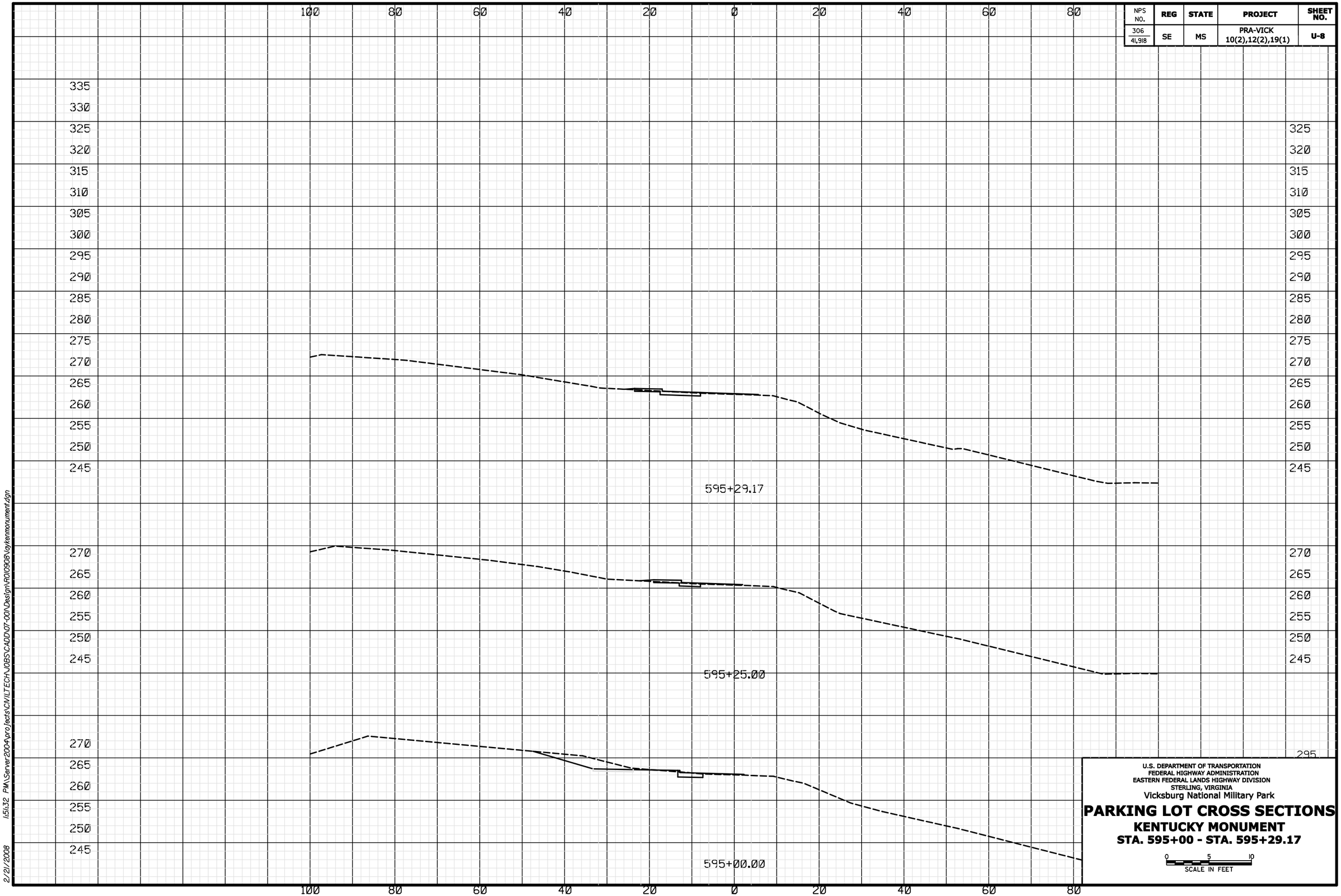

2/21/2008 1:51:32 PM \\Server2004\projects\CIVIL\TECH\JOBS\CADD\07-001\Design\R01\0908\vdykenmonument.dgn

NPS NO.	REG	STATE	PROJECT	SHEET NO.
306 41,918	SE	MS	PRA-VICK 10(2),12(2),19(1)	U-9

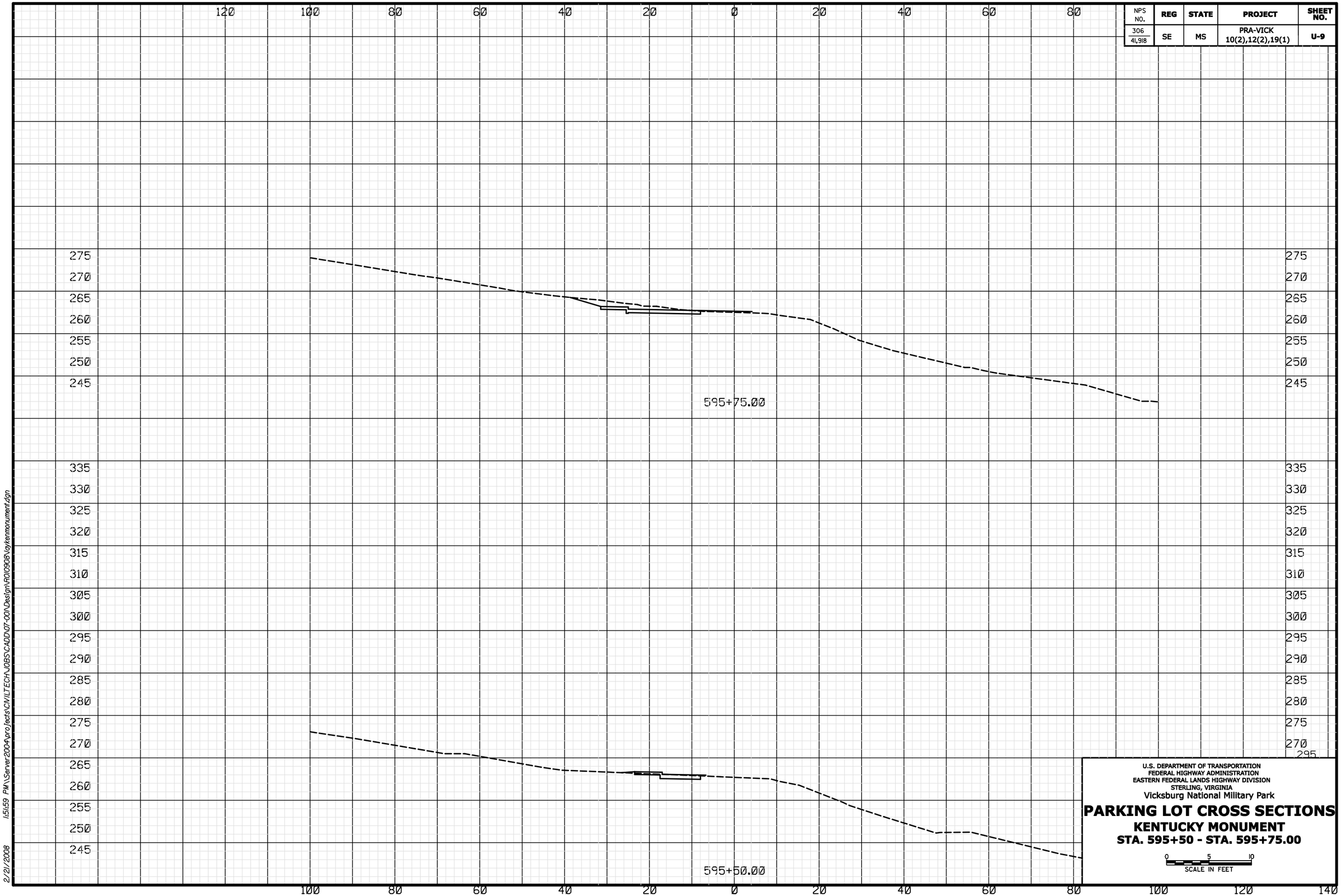

U.S. DEPARTMENT OF TRANSPORTATION
FEDERAL HIGHWAY ADMINISTRATION
EASTERN FEDERAL LANDS HIGHWAY DIVISION
STERLING, VIRGINIA

Vicksburg National Military Park

PARKING LOT CROSS SECTIONS

KENTUCKY MONUMENT

STA. 595+50 - STA. 595+75.00

0 5 10
SCALE IN FEET

2/21/2008 15:59 PM \\Server2004\projects\CIVILTECH\JOBS\CADD\07-00\Design\ROI0908\voykenmonument.dgn

NPS NO.	REG	STATE	PROJECT	SHEET NO.
306 41,918	SE	MS	PRA-VICK 10(2),12(2),19(1)	U-10

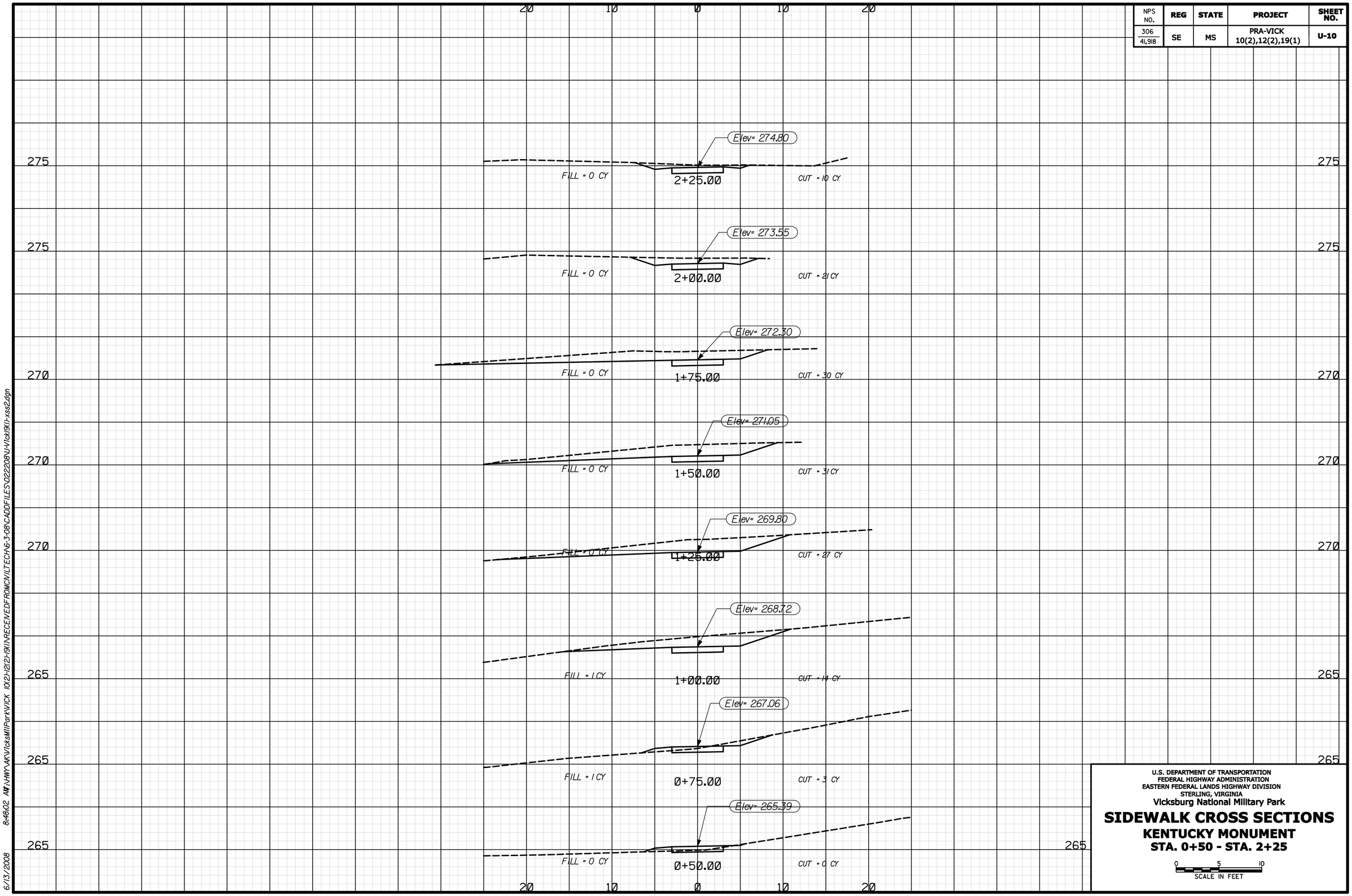

U.S. DEPARTMENT OF TRANSPORTATION
FEDERAL HIGHWAY ADMINISTRATION
EASTERN FEDERAL LANDS HIGHWAY DIVISION
STERLING, VIRGINIA

Vicksburg National Military Park

SIDEWALK CROSS SECTIONS
KENTUCKY MONUMENT
STA. 0+50 - STA. 2+25

0 5 10
SCALE IN FEET

6/13/2008 8:48:02 AM J:\HWY\AK\VicksMilPark\VICK 10(2)-12(2)-19(1)\RECEIVEDFROMCN\LTECH\G-3-08\CADDFILES\022208\U-VICK(SH)-xss2.dgn

NPS NO.	REG	STATE	PROJECT	SHEET NO.
306 41,918	SE	MS	PRA-VICK 10(2),12(2),19(1)	U-11

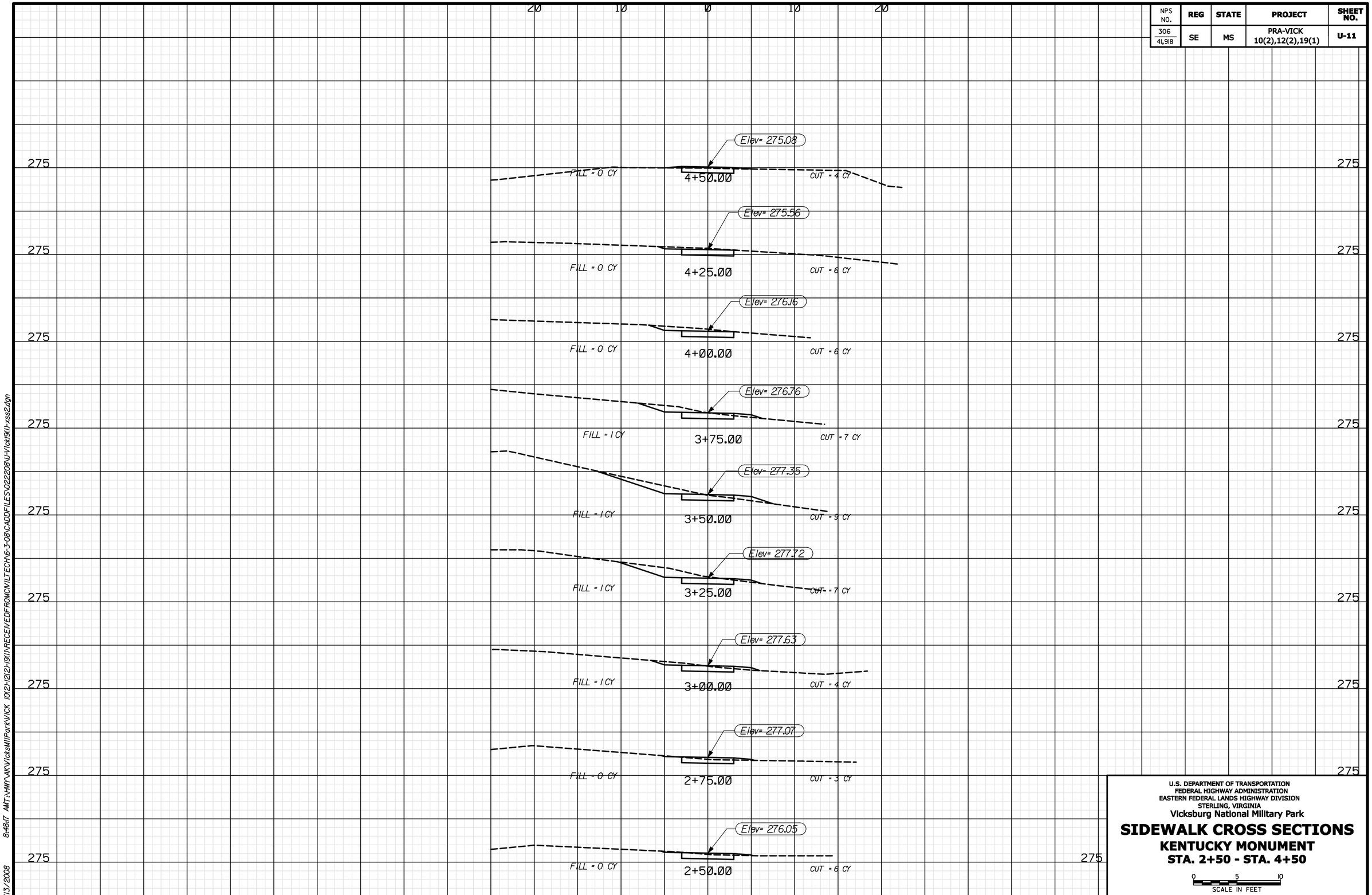

U.S. DEPARTMENT OF TRANSPORTATION
FEDERAL HIGHWAY ADMINISTRATION
EASTERN FEDERAL LANDS HIGHWAY DIVISION
STERLING, VIRGINIA
Vicksburg National Military Park

SIDEWALK CROSS SECTIONS
KENTUCKY MONUMENT
STA. 2+50 - STA. 4+50

0 5 10
SCALE IN FEET

6/13/2008 8:48:17 AM T:\HWY\AK\Vicksmilpark\VICK 10(2)-12(2)-19(1)\RECEIVEDFROMCN\LTECH\G-3-08\CADFILES\022208\U-11\ck19(1)-xss2.dgn

NPS NO.	REG	STATE	PROJECT	SHEET NO.
306 41,918	SE	MS	PRA-VICK 10(2),12(2),19(1)	U-12

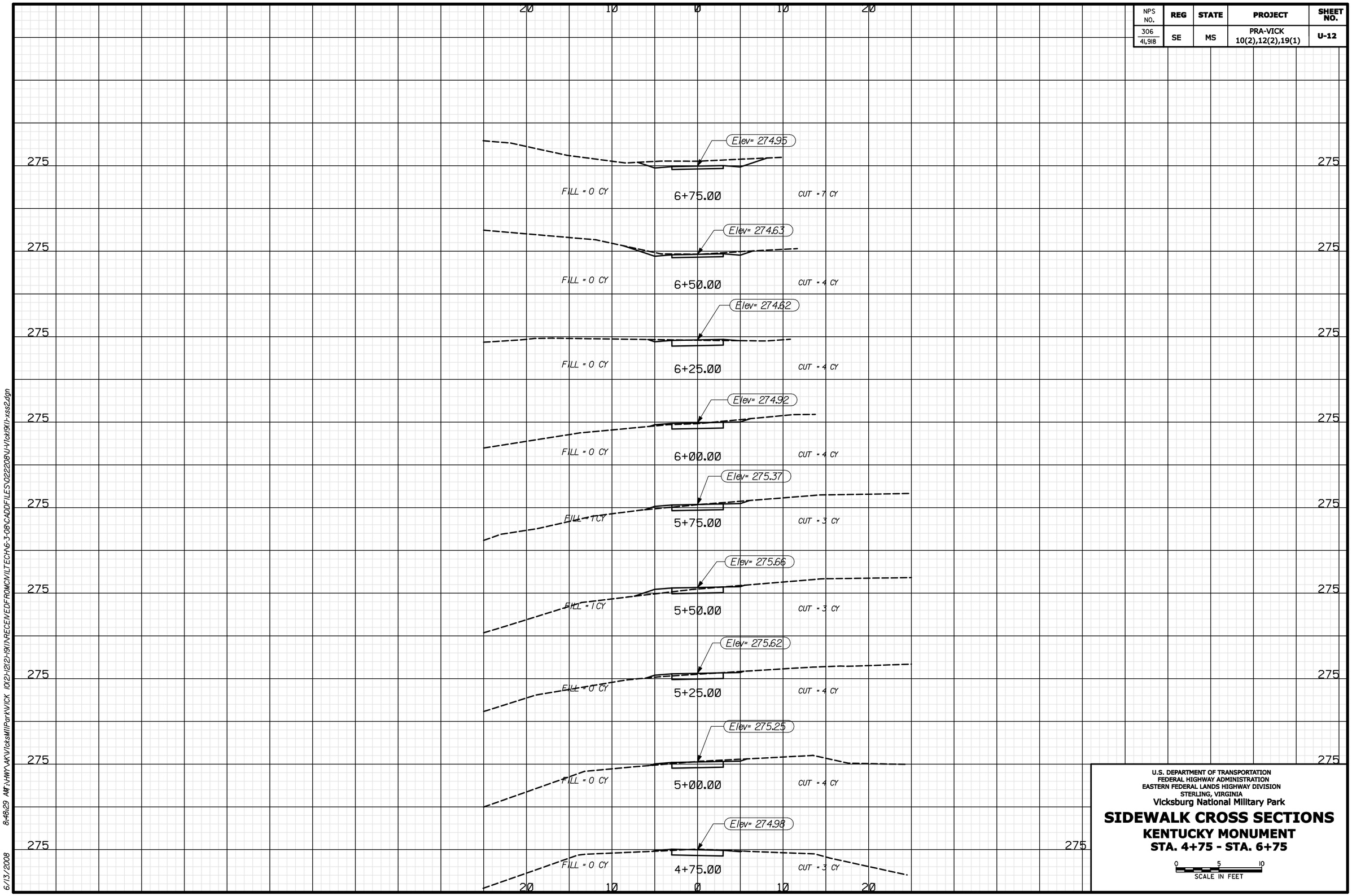

U.S. DEPARTMENT OF TRANSPORTATION
FEDERAL HIGHWAY ADMINISTRATION
EASTERN FEDERAL LANDS HIGHWAY DIVISION
STERLING, VIRGINIA

Vicksburg National Military Park

SIDEWALK CROSS SECTIONS
KENTUCKY MONUMENT
STA. 4+75 - STA. 6+75

0 5 10
SCALE IN FEET

6/13/2008 8:48:29 AM F:\HWY\AK\VicksMilPark\VICK 10(2)-12(2)-19(1)\RECEIVED FROM CIVIL TECH\6-3-08\CADDFILES\022208\U-12\ck19(1)-xss2.dgn